EPA-450/3-83-007

Guideline Series

Control of Volatile Organic Compound Equipment Leaks from Natural Gas/Gasoline Processing Plants

Emission Standards and Engineering Division

U.S. ENVIRONMENTAL PROTECTION AGENCY
Office of Air, Noise, and Radiation
Office of Air Quality Planning and Standards
Research Triangle Park, North Carolina 27711

December 1983

GUIDELINE SERIES

The guideline series of reports is issued by the Office of Air Quality Planning and Standards (OAQPS) to provide information to state and local air pollution control agencies; for example, to provide guidance on the acquisition and processing of air quality data and on the planning and analysis requisite for the maintenance of air quality. Reports published in this series will be available - as supplies permit - from the Library Services Office (MD-35), U.S. Environmental Protection Agency, Research Triangle Park, North Carolina 27711, or for a nominal fee, from the National Technical Information Service, 5285 Port Royal Road, Springfield, Virginia 22161.

TABLE OF CONTENTS

	Page
List of Tables	v
List of Figures	vii
Metric Conversion Table	viii
1.0 Introduction	1-1
2.0 Sources of VOC Emissions	2-1
2.1 General	2-1
2.2 Description of Fugitive Emission Sources	2-1
2.3 Baseline Fugitive VOC Emissions	2-8
2.4 References	2-12
3.0 Emission Control Techniques	3-1
3.1 Leak Detection and Repair Methods	3-1
3.2 Equipment Specifications	3-12
3.3 Other Control Strategies	3-16
3.4 Other Considerations	3-21
3.5 References	3-25
4.0 Environmental Analysis of RACT	4-1
4.1 Reasonably Available Control Techniques (RACT) Procedures	4-1
4.2 Air Pollution	4-2
4.3 Water Pollution	4-3
4.4 Solid Waste	4-6
4.5 Energy	4-6
4.5 References	4-9
5.0 Control Cost Analysis of RACT	5-1
5.1 Basis for Capital Costs	5-1
5.2 Basis for Annual Costs	5-2
5.3 Emission Control Costs of RACT	5-4
5.4 Cost Effectiveness of RACT	5-5
5.5 Analysis of Compressor Vent Control System Costs	5-5
5.6 References	5-20

TABLE OF CONTENTS
(concluded)

		Page
Appendix A.	Emission Source Test Data.	A-1
Appendix B.	Model Plants	B-1
Appendix C.	Public Comments.	C-1
Appendix D.	Summary and Responses to Draft CTG Comments. . . .	D-1

LIST OF TABLES

		Page
Table 2-1	Baseline Fugitive Emission Factors for Gas Plants	2-9
Table 2-2	Baseline Emissions from Three Model Gas Plants	2-11
Table 3-1	Percent Emissions from Sources with Instrument Readings Equal to or Greater than 10,000 ppmv	3-6
Table 3-2	Estimated Percent Components Leaking Per Inspection for Quarterly Monitoring	3-9
Table 3-3	Average Emission Rates from Components above 10,000 ppmv and at 1,000 ppmv	3-10
Table 3-4	Controlled Emission Factors for Quarterly Leak Detection and Repair	3-13
Table 3-5	Illustration of Skip-Period Monitoring	3-21
Table 4-1	Example Calculation of VOC Fugitive Emissions From Model Plant B Under RACT	4-4
Table 4-2	Annual Emissions on a Component Type Basis for Each Model Plant	4-5
Table 4-3	Energy Impacts on a Component Type Basis For Model Plant B	4-7
Table 4-4	Energy Impacts on a Model Plant Basis	4-8
Table 5-1	Capital Cost Data	5-7
Table 5-2	Labor-Hour Requirements for Initial Leak Repair Under RACT	5-10
Table 5-3	Initial Leak Repair Costs	5-11
Table 5-4	Basis for Annualized Cost Estimates	5-12
Table 5-5	Annual Leak Detection and Repair Labor Requirements for RACT	5-13
Table 5-6	Annual Leak Detection and Repair Costs	5-14

LIST OF TABLES
(concluded)

		Page
Table 5-7	Example Calculation of Product Recovery Credits for Model Plant B.	5-15
Table 5-8	Model Plant Recovery Cost Credits.	5-16
Table 5-9	Annualized Control Costs for Model Units	5-17
Table 5-10	Examples of Cost Effectiveness by Component Type for Model Plant B	5-18
Table 5-11	Costs and Cost Effectiveness of Compressor Vent Control System for Model Plant B.	5-19
Table A-1	Gas Plants Tested for Fugitive Emissions	A-5
Table A-2	Instrument Screening Data for EPA-Tested Gas Plants	A-6
Table A-3	Soap Screening Data for API-Tested and EPA-Tested Gas Plants	A-7
Table B-1	Example Types of Equipment Included and Excluded in Vessel Inventories for Model Plant Development.	B-4
Table B-2	Number of Components in Hydrocarbon Service and Number of Vessels at Four Gas Plants	B-5
Table B-3	Ratios of Numbers of Components to Numbers of Vessels	B-6
Table B-4	Fugitive VOC Emission Sources for Three Model Gas Processing Plants.	B-7

LIST OF FIGURES

		Page
Figure 2-1	General Schematic of Natural Gas-Gasoline Processing	2-2
Figure 2-2	Diagram of a Simple Packed Seal	2-3
Figure 2-3	Diagram of a Basic Single Mechanical Seal	2-4
Figure 2-4	Diagram of a Gate Valve	2-7
Figure 2-5	Diagram of Spring-Loaded Relief Valve	2-7
Figure 3-1	Compressor Distance Piece Purge System	3-15
Figure 3-2	Cost-Effectiveness of Quarterly Leak Detection and Repair of Valves with Varying Initial Leak Frequency	3-18
Figure 3-3	Cost Effectiveness of Quarterly Leak Detection and Repair of Valves for Low Production Volume Units	3-23

METRIC CONVERSION TABLE

EPA policy is to express all measurements in Agency documents in metric units. Listed below are metric units used in this report with conversion factors to obtain equivalent English units. A list of prefixes to metric units is also presented.

To Convert Metric Unit	Multiply By Conversion Factor	To Obtain English Unit
centimeter (cm)	0.39	inch (in.)
meter (m)	3.28	feet (ft.)
liter (l)	0.26	U.S. gallon (gal)
cubic meter (m^3)	264.2	U.S. gallon (gal)
cubic meter (m^3)	6.29	barrel (oil) (bbl)
cubic meter (m^3)	35	cubic feet (ft^3)
kilogram (kg)	2.2	pound (lb)
megagram (Mg)	1.1	ton
gigagram (Gg)	2.2	million pounds (10^6 lbs)
gigagram (Gg)	1102	ton
joule (J)	9.48×10^{-4}	British thermal unit (Btu

PREFIXES

Prefix	Symbol	Multiplication Factor
tera	T	10^{12}
giga	G	10^9
mega	M	10^6
kilo	k	10^3
centi	c	10^{-2}
milli	m	10^{-3}
micro	μ	10^{-6}

1.0 INTRODUCTION

The Clean Air Act Amendments of 1977 require each State in which there are areas in which the national ambient air quality standards (NAAQS) are exceeded to adopt and submit revised State implementation plans (SIP's) to EPA. Revised SIP's were required to be submitted to EPA by January 1, 1979. States which were unable to demonstrate attainment with the NAAQS for ozone by the statutory deadline of December 31, 1982, could request extensions for attainment with the standard. States granted such an extension were required to submit a further revised SIP by July 1, 1982.

Section 172(a)(2) and (b)(3) of the Clean Air Act require that nonattainment area SIP's include reasonably available control technology (RACT) requirements for stationary sources. As explained in the "General Preamble for Proposed Rulemaking on Approval of State Implementation Plan Revisions for Nonattainment Areas," (44 FR 20372, April 4, 1979) for ozone SIP's, EPA permitted States to defer the adoption of RACT regulations on a category of stationary sources of volatile organic compounds (VOC) until after EPA published a control techniques guideline (CTG) for that VOC source category. See also 44 FR 53761 (September 17, 1979). This delay allowed the States to make more technically sound decisions regarding the application of RACT.

Although CTG documents review existing information and data concerning the technology and cost of various control techniques to reduce emissions, they are, of necessity, general in nature, and do not fully account for variations within a stationary source category. Consequently, the purpose of CTG documents is to provide State and local air pollution control agencies with an initial information base for proceeding with their own assessment of RACT for specific stationary sources.

2.0 SOURCES OF VOC EMISSIONS

2.1 GENERAL

Natural gas/gasoline processing plants (gas plants) are a part of the oil and gas industry. Field gas is first gathered in the field directly from gas wells or from oil/gas separation equipment (see Figure 2-1). The gas may be compressed at field stations for the purpose of transporting it to treating or processing facilities. Treating is necessary in certain instances for removal of water, sulfur compounds, or carbon dioxide. Gas gathering, compression, and treating may or may not occur at a gas plant. For the purposes of this document, natural gas processing plants are defined as facilities engaged in the separation of natural gas liquids from field gas and/or fractionation of the liquids into natural gas products, such as ethane, propane, butane, and natural gasoline. Excluded from the definition are compressor stations, dehydration units, sweetening units, field treatment, underground storage facilities, liquefied natural gas units, and field gas gathering systems unless these facilities are located at a gas plant. Types of gas plants are: absorption, refrigerated absorption, refrigeration, compression, adsorption, cryogenic — Joule-Thomson, and cryogenic-expander.[1]

2.2 DESCRIPTION OF FUGITIVE EMISSION SOURCES

In this document, fugitive emissions from gas plants are considered to be those volatile organic compound (VOC) emissions that result when process fluid (either gaseous or liquid) leaks from plant equipment. VOC emissions are defined as nonmethane-nonethane hydrocarbon emissions. There are many potential sources of fugitive emissions in a gas plant. The following sources are considered in this chapter: pumps, compressors, valves, relief valves, open-ended lines, flanges and connections, and gas-operated control valves. These source types are described below.

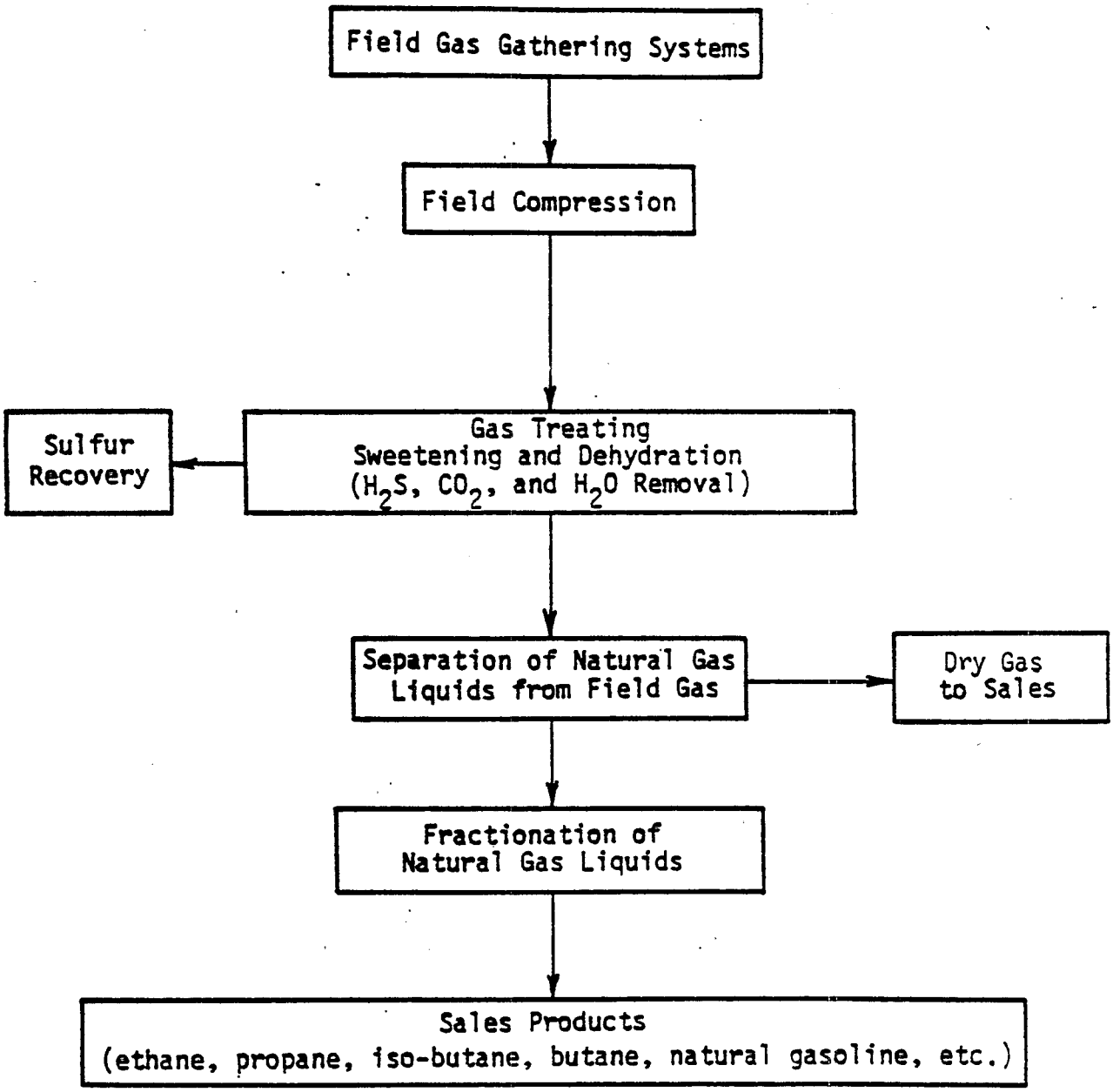

Figure 2-1. General Schematic of Natural Gas-Gasoline Processing.

2.2.1 Pumps

Pumps are used in gas plants for the movement of natural gas liquids. The centrifugal pump is the most widely used pump. However, other types, such as the positive-displacement, reciprocating and rotary action, and special canned and diaphragm pumps, may also be used. Natural gas liquids transferred by pumps can leak at the point of contact between the moving shaft and stationary casing. Consequently, all pumps except the canned-motor and diaphragm type require a seal at the point where the shaft penetrates the housing in order to isolate the pump's interior from the atmosphere.

Two generic types of seals, packed and mechanical, are currently in use on pumps. Packed seals can be used on both reciprocating and rotary action types of pumps. As Figure 2-2 shows, a packed seal consists of a cavity ("stuffing box") in the pump casing filled with special packing material that is compressed with a packing gland to form a seal around the shaft. Lubrication is required to prevent the buildup of frictional heat between the seal and shaft. The necessary lubrication is provided by a lubricant that flows between the packing and the shaft.[2]

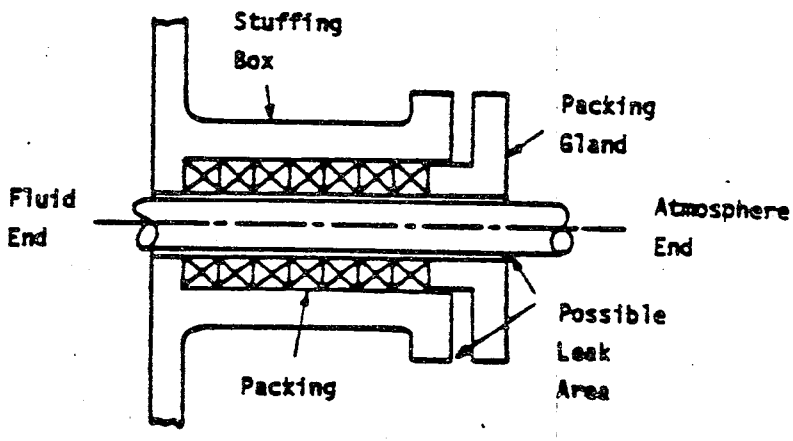

Figure 2-2. Diagram of a simple packed seal.[2]

Mechanical seals are limited in application to pumps with rotating shafts and can further be categorized as single and dual mechanical

seals. There are many variations to the basic design of mechanical seals, but all have a lapped seal face between a stationary element and a rotating seal ring. In a single mechanical seal application (Figure 2-3), the rotating-seal ring and stationary element faces are lapped to a very high degree of flatness to maintain contact throughout their entire mutual surface area. As with a packed seal, the seal faces must be lubricated to remove frictional heat. However, because of its construction, much less lubricant is needed.

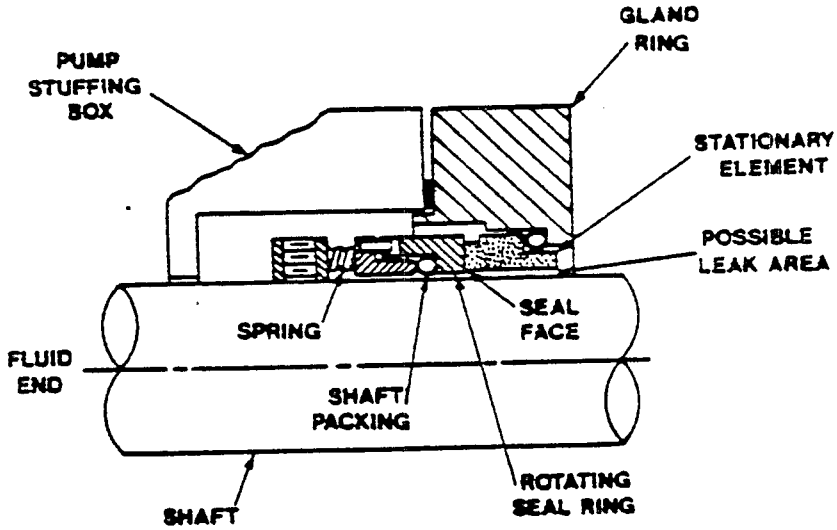

Figure 2-3. Diagram of a basic single mechanical seal.[2]

2.2.2 Compressors

Three types of compressors can be used in the natural gas production industry: centrifugal, reciprocating, and rotary. The centrifugal compressor utilizes a rotating element or series of elements containing curved blades to increase the pressure of a gas by centrifugal force. Reciprocating and rotary compressors increase pressure by confining the gas in a cavity and progressively decreasing the volume of the cavity. Reciprocating compressors usually employ a piston and cylinder arrangement while rotary compressors utilize rotating elements such as lobed impellers or sliding vanes.

As with pumps, sealing devices are required to prevent leakage from compressors. Rotary shaft seals for compressors may be chosen from several different types: labyrinth, restrictive carbon rings, mechanical contact, and liquid film. All of these seal types are leak restriction

devices; none of them completely eliminates leakage. Many compressors may be equipped with ports in the seal area to evacuate collected gases.

Mechanical contact seals are a common type of seal for rotary compressor shafts, and are similar to the mechanical seals described for pumps. In this type of seal the clearance between the rotating and stationary elements is reduced to zero. Oil or another suitable lubricant is supplied to the seal faces. Mechanical seals can achieve the lowest leak rates of the types identified above, but they are not suitable for all processing conditions.[3]

Packed seals are used for reciprocating compressor shafts. As with pumps, the packing in the stuffing box is compressed with a gland to form a seal. Packing used on reciprocating compressor shafts is often of the "chevron" or nested V type.[4] Because of safety considerations, the area between the compressor seals and the compressor motor (distance piece) is normally enclosed and vented outside of the compressor building. If hydrogen sulfide is present in the gas, then the vented vapors are normally flared.[10]

Reciprocating compressors may employ a metallic packing plate and nonmetallic partially compressible (i.e., GRAFFOIL,[R] TEFLON[R]) material or oil wiper rings to seal shaft leakage to the distance piece. Nevertheless, some leakage into the distance piece may occur.

2.2.3 Process Valves

One of the most common pieces of equipment in gas plants is the valve. The types of valves commonly used are globe, gate, plug, ball, butterfly, relief, and check valves. All except the relief valve (to be discussed below) and check valve are activated through a valve stem, which may have a rotational or linear motion, depending on the specific design. This stem requires a seal to isolate the process fluid inside the valve from the atmosphere as illustrated by the diagram of a gate valve in Figure 2-4. The possibility of a leak through this seal makes it a potential source of fugitive emissions. Since a check valve has no stem or subsequent packing gland, it is not considered to be a potential source of fugitive emissions.

Sealing of the stem to prevent leakage can be achieved by packing inside a packing gland or O-ring seals. Valves that require the stem to move in and out with or without rotation must utilize a packing gland.

Conventional packing glands are suited for a wide variety of packing materials. The most common are various types of braided asbestos that contain lubricants. Other packing materials include graphite, graphite-impregnated fibers, and tetrafluoroethylene polymer. The packing material used depends on the valve application and configuraton.[6] These conventional packing glands can be used over a wide range of operating temperatures. At high pressures these glands must be quite tight to attain a good seal.[7]

2.2.4 Pressure Relief Devices

Engineering codes require that pressure-relieving devices or systems be used in applications where the process pressure may exceed the maximum allowable working pressure of the vessel. The most common type of pressure-relieving device used in process units is the pressure relief valve (Figure 2-5). Typically, relief valves are spring-loaded and designed to open when the process pressure exceeds a set pressure, allowing the release of vapors or liquids until the system pressure is reduced to its normal operating level. When the normal pressure is reattained, the valve reseats, and a seal is again formed.[8] The seal is a disk on a seat, and the possibility of a leak through this seal makes the pressure relief valve a potential source of VOC fugitive emissions. A seal leak can result from corrosion or from improper reseating of the valve after a relieving operation.[2]

Rupture disks may also be used in process units. These disks are made of a material that ruptures when a set pressure is exceeded, thus allowing the system to depressurize. The advantage of a rupture disk is that the disk seals tightly and does not allow any VOC to escape from the system under normal operation. However, when the disk does rupture, the system depressurizes until atmospheric conditions are obtained, unless the disk is used in series with a pressure relief valve.

2.2.5 Open-Ended Lines

Some valves are installed in a system so that they function with the downstream line open to the atmosphere. Open-ended lines are used mainly in intermittent service for sampling and venting. Examples are purge, drain, and sampling lines. Some open-ended lines are needed to preserve product purity. These are normally installed between multi-use product lines to prevent products from collecting in cross-tie lines due

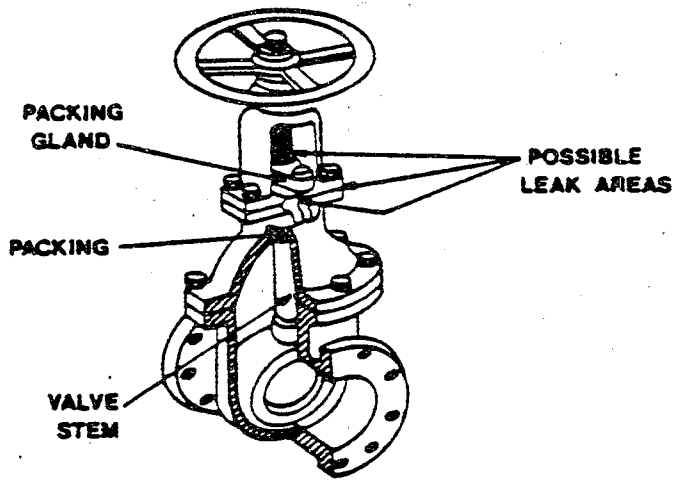

Figure 2-4. Diagram of a gate valve.[2]

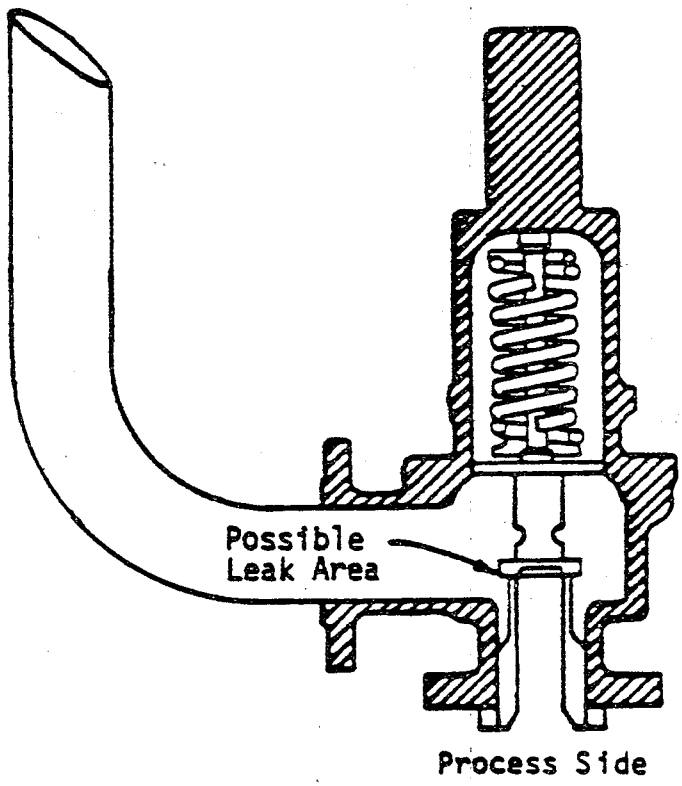

Figure 2-5. Diagram of a spring-loaded relief valve.

to valve seat leakage. In addition to valve seat leakage, an incompletely closed valve could result in VOC emissions to the atmosphere.

2.2.6 Flanges and Connections

Flanges are bolted, gasket-sealed junctions used wherever pipe or other equipment such as vessels, pumps, valves, and heat exchangers may require isolation or removal. Connections are all other nonwelded fittings that serve a similar purpose to flanges, that also allow bends in pipes (ells), joining two pipes (couplings), or joining three or four pipes (tees or crosses). The connections are typically threaded.

Flanges may become fugitive emission sources when leakage occurs due to improperly chosen gaskets or poorly assembled flanges. The primary cause of flange leakage is due to thermal stress that piping or flanges in some services undergo; this results in the deformation of the seal between the flange faces.[9] Threaded connections may leak if the threads become damaged or corroded, or if tightened without sufficient lubrication or torque.

2.2.7 Gas-Operated Control Valves

Pneumatic control valves are used widely in process control at gas plants. Typically, compressed air is used as the operating medium for these control valves. In certain instances, however, field gas or flash gas is used to supply pressure.[5] Since gas is either continuously bled to the atmosphere or is bled each time the valve is activated, this can potentially be a large source of fugitive emissions. There are also some instances where highly pressurized field gas is used as the operating medium for emergency control valves. However, these valves are seldom activated and, therefore, have a much lower emissions potential than control valves in routine service.

2.3 BASELINE FUGITIVE VOC EMISSIONS

Baseline fugitive emission data have been obtained at six natural gas/gasoline processing plants. Two of the plants were tested by Rockwell International under contract to the American Petroleum Institute,[11] and four plants were tested by Radian Corporation under contract to EPA.[12] Baseline fugitive emission factors were developed from these data,[12] and are presented in Table 2-1. The factors represent the average baseline

Table 2-1. BASELINE FUGITIVE EMISSION FACTORS FOR GAS PLANTS (kg/day)[a]

Component	Emission factor		95% Confidence interval	
Valves	0.18	(0.48)	0.1 - 0.3	(0.2 - 1)
Relief valves	0.33	(4.5)	0.007 - 8	(0.1 - 100)
Open-ended lines	0.34	(0.53)	0.1 - 0.7	(0.2 - 1)
Compressor seals[b]	6.4	(18)		
Pump seals	1.2	(1.5)	0.5 - 3	(0.5 - 4)
Flanges and connections	0.011	(0.026)	0.006 - 0.02	(0.01 - 0.05)

xx = VOC emission values.
(xx)= Total hydrocarbon emission values.

[a]Reference 12.

[b]Compressor seal emission factors from Reference 12 were not used because the data base included dry gas compressors (which are not subject to RACT). The emission factors shown are a weighted average of wet gas and natural gas liquids compressor seals as developed in Reference 13.

emission rate from each of the components of a specific type in a gas plant. The compressor seal emission factor represents a weighted average of compressor seals in wet gas and natural gas liquids service.[13] Compressor seal emission factors are not directly from gas plant testing because this data included dry gas compressors which are not subject to RACT.

The total daily and annual emissions from fugitive sources at each of the three model gas plants (developed in Appendix B) are shown in Table 2-2. Total daily emissions are calculated by multiplying the number of pieces of each type of equipment by the corresponding daily emission factor. The average percent of total emissions attributed to each component type is also presented in Table 2-2. The average percent of total emissions attributed to each component type is the same for each model plant.

Table 2-2. BASELINE EMISSIONS FROM THREE MODEL GAS PLANTS

Component type	Baseline Emission factor[a] (kg/day)	Number of Components: Model plant A (10 vessels)	Model plant B (30 vessels)	Model plant C (100 vessels)	Baseline Emissions (kg/day): Model plant A	Model plant B	Model plant C	Percent total emissions
Valves	0.18 (0.48)	250	750	2,500	45 (120)	135 (360)	450 (1,200)	50 (52)
Relief valves	0.33 (4.5)	4	12	40	1.3 (18)	4.0 (54)	13 (180)	2 (8)
Open-ended lines	0.34 (0.53)	50	150	500	17 (26)	51 (80)	170 (260)	19 (11)
Compressor seals	6.4 (18)	2	6	20	13 (36)	38 (110)	130 (360)	14 (16)
Pump seals	1.2 (1.5)	2	6	20	2.4 (3.0)	7.2 (9.0)	24 (30)	3 (1)
Flanges & connections	0.011 (0.026)	1,000	3,000	10,000	11 (26)	33 (78)	110 (260)	12 (11)
				Total baseline emissions	90 (230)	270 (690)	900 (2,300)	
				(Mg/yr)[b]	32 (84)	98 (250)	320 (840)	

xx = VOC emission values.
(xx) = Total hydrocarbon emission values.

[a]From Table 2-1.

[b]Assumes 365 days per year operation.

2.4 REFERENCES

1. Cantrell, A. Worldwide Gas Processing. Oil and Gas Journal, July 14, 1980. p. 88.

2. Organic Chemical Manufacturing, Volume 3: Storage, Fugitive, and Secondary Sources. Report 2, Fugitive Emissions. U.S. Environmental Protection Agency. Office of Air Quality Planning and Standards. Emission Standards and Engineering Division. Research Triangle Park, North Carolina. EPA-450/3-80-025. December 1980.

3. Nelson, W.E. Compressor Seal Fundamentals. Hydrocarbon Processing, 56(12):91-95. 1977.

4. Telecon. R.A. McAllister, TRW, to G.H. Holliday, Shell Oil, Houston, Texas. March 10, 1981. Compressors and seals at gas plants.

5. Letter from Hennings, T.J., TRW to K.C. Hustvedt, EPA. May 13, 1981. Results of a telephone survey concerning the use of pneumatic control valves at gas plants.

6. Lyons, J.D., and C.L. Ashland, Jr. Lyons' Encyclopedia of Valves. New York, Van Nostrand Reinhold Co., 1975. 290 p.

7. Templeton, H.C. Valve Installation, Operation and Maintenance. Chem. E., 78(23)141-149, 1971.

8. Steigerwald, B.J. Emissions of Hydrocarbons to the Atmosphere from Seals on Pumps and Compressors. Report No. 6, PB 216 582, Joint District, Federal and State Project for the Evaluation of Refinery Emissions. Air Pollution Control District, County of Los Angeles, California. April 1958. 37 p.

9. McFarland, I. Preventing Flange Fires. Chemical Engineering Progress, 65(8):59-61. 1969.

10. Letter from Hennings, T.J., TRW to K.C. Hustvedt, EPA. July 7, 1981. Results of a telephone survey concerning control of fugitive emissions from gas plant compressor seals.

11. Eaton, W.S., et al. Fugitive Hydrocarbon Emissions from Petroleum Production Operations. API Publication No. 4322. March 1980.

12. DuBose, D.A., J.I. Steinmetz, and G.E. Harris. Radian Corp., Austin, TX. Frequency of Leak Occurrence and Emission Factors for Natural Gas Liquid Plants. Final Report. Prepared for U.S. Environmental Protection Agency, Research Triangle Park, North Carolina. EMB Report No. 80-FOL-1. July 1982.

13. Memorandum, K.C. Hustvedt, EPA, CPB to James F. Durham, EPA, CPB. Revised Gas Plant Compressor Seal Emission Factor. February 10, 1983.

3.0 EMISSION CONTROL TECHNIQUES

Sources of fugitive VOC emissions from gas plant equipment were identified in Chapter 2 of this document. This chapter discusses the emission control techniques which are considered to be reasonably available control technology (RACT) for these sources. These techniques include leak detection and repair programs and equipment specifications. The estimated control effectiveness of the techniques is also presented.

This chapter (Section 3.3) also presents other control strategies applicable to control of fugitive emissions from gas plants. However, the control effectiveness of these alternative strategies has not been estimated.

3.1 LEAK DETECTION AND REPAIR METHODS

Leak detection and repair methods can be applied to reduce fugitive emissions from gas plant sources. Leak detection methods are used to identify equipment components that are emitting significant amounts of VOC. Emissions from leaking sources may be reduced by three general methods: repair, modification, or replacement of the source.

3.1.1 Individual Component Survey

Each fugitive emission source (pump, valve, compressor, etc.) is checked for VOC leakage in an individual component survey. The source may be checked for leakage by visual, audible, olfactory, soap solution, or instrument techniques. Visual methods are good for locating liquid leaks, especially pump seal failures. High pressure leaks may be detected by hearing the escaping vapors, and leaks of odorous materials may be detected by smell. Predominant industry practices are leak detection by visual, audible, and olfactory methods. However, in many instances, even very large VOC leaks are not detected by these methods.

Applying a soap solution (soaping) to equipment components is one individual survey method. If bubbles are seen in the soap solution, a

potential leak from the component is indicated. The rate of leakage may be subjectively determined by the observer by determining the number of bubbles formed over a specified time period. In addition, soaping may also serve as a preliminary screening technique, in that the number of equipment components otherwise subject to instrument monitoring may be reduced to only those components for which bubbles were detected. Soaping is not appropriate for very hot sources, although ethylene glycol can be added to the soap solution to extend the temperature range. This method is also not suited for moving shafts on pumps or compressors, since the motion of the shaft may cause entrainment of air in the soap solution and indicate a leak when none is present. In addition, the method cannot generally be applied to open sources such as relief valves or vents without additional equipment.

The use of portable hydrocarbon detection instruments is the best individual survey method for identifying leaks of VOC from equipment components because it is applicable to all types of sources. EPA Reference Method 21, Determination of Volatile Organic Compound Leaks, specifies the procedures for instrument monitoring. This method incorporates the use of a portable analyzer to detect the presence of volatile organic vapors at the surface of the interface where direct leakage to atmosphere could occur. This sampling traverse is called "monitoring" in subsequent descriptions. A measure of the hydrocarbon concentration of the sampled air is displayed in the instrument meter. The approach of this technique assumes that if an organic leak exists, there will be an increased vapor concentration in the vicinity of the leak, and that the measured concentration is generally proportional to the mass emission rate of the organic compound.

3.1.2 Repair Methods

The following descriptions of repair methods include only those features of each fugitive emission source (pump, valve, etc.) which need to be considered in assessing the applicability and effectiveness of each method.

3.1.2.1 Pumps. In many cases, it is possible to operate a spare pump while the leaking pump is being repaired. Leaks from packed

seals may be reduced by tightening the packing gland. At some point, the packing may deteriorate to the point where further tightening would have no effect or possibly even increase fugitive emissions from the seal. The packing can be replaced with the pump out of service. When mechanical seals are utilized, the pump must be dismantled so the leaking seal can be repaired or replaced. Dismantling pumps may result in spillage of some process fluid causing emissions of VOC. The maximum amount of VOC released to atmosphere from these temporary emissions may be estimated by assuming all the trapped VOC found between the inlet and outlet block valves are released. The mass emissions from pump repair were quantified assuming the VOC contained between the block valves is approximated by 2 m of 10 cm pipe. As such, a conservative estimate of pump repair emissions is 8.6 kg VOC, or the equivalent of the emissions from a leaking pump over a three day period.[1] Pumps should be isolated from the process and flushed of VOC to a closed system as much as possible prior to repacking or seal replacement to minimize spillage emissions, however, even with spillage, repair will result in an emission reduction.

3.1.2.2 Compressor Seals. As discussed in Chapter 2, there are three types of compressors used in natural gas plants: centrifugal, rotary, and reciprocating. Centrifugal and rotary compressors are driven by rotating shafts while reciprocating compressors are driven by shafts having a linear reciprocating motion. In either case, fugitive emissions occur at the junction of the moving shafts and the stationary casing, but the kinds of controls that can be effectively applied depend on the type of shaft motion involved.

Repair of leaking compressor seals may be accomplished if there is a spare compressor or spare compressor capacity such that repairs can be performed on the leaking seal without a unit shutdown. Leaks from compressor seals may be reduced by the same repair procedure that was described for pumps (i.e., tightening the packing). Other types of seals, however, may require that the compressor be taken out of service for repair.

3.1.2.3 Relief Valves. In general, relief valves which leak must be removed in order to repair the leak. In some cases of improper

reseating, manual release of the valve may improve the seat seal. In order to remove the relief valve without shutting down the process, a block valve may be required upstream of the relief valve. A spare relief valve should be attached while the faulty valve is repaired and tested. As an alternative to the potential hazard introduced by the chance of a block valve being mistakenly closed when a vessel is overpressured, it may be preferable to install a second block valve and relief valve for use when the first relief valve is under repair. An even safer alternative is to install a three-way valve with parallel relief systems so that one of the two relief systems is always open.

Some relief valves may be difficult to monitor. A state or local agency may wish to require less frequent monitoring for relief valves that are difficult to access because of location or hazardous operating conditions.

3.1.2.4 Valves. Most valves have a packing gland which can be tightened while in service. Although this procedure should decrease the emissions from the valve, in some cases it may actually increase the emission rate if the packing is old and brittle or has been overtightened. Unbalanced tightening of the packing gland may also cause the packing material to be positioned improperly in the valve and allow leakage. Valves which are not often used can build up a "static" seal of paint or hardened lubricant which could be broken by tightening the packing gland.

Plug-type valves can be lubricated with grease to reduce emissions around the plug. Some types of valves have no means of in-service repair and must be isolated from the process and removed for repair or replacement. Other valves, such as control valves, may be excluded from in-service repair by operating procedures or safety procedures. In many cases, valves cannot be isolated from the process for removal. If a line must be shut down in order to isolate a leaking valve, the emissions resulting from the shutdown will possibly be greater than the emissions from the valve if allowed to leak until the next process change which permits isolation for repair. Depending on site-specific factors, it may also be possible to repair leaking process valves by injection of a sealing fluid into the source of the leak.[2]

3.1.2.5 Flanges and Connections. In some cases, leaks from flanges can be reduced by replacing the flange gaskets. Leaks from small threaded connections can be reduced by placing synthetic (e.g., Teflon) tape or "pipe dope" on the male threads before the connection is made. Most flanges and connections cannot be isolated to permit repair of leaks. Data show that flanges and connections emit relatively small amounts of VOC (Table 2-1).

3.1.3 Control Effectiveness of Leak Detection and Repair Methods

There are several factors which determine the control effectiveness of a leak detection and repair program; these include:

- Action level or leak definition,
- Inspection interval or monitoring frequency,
- Achievable emission reduction from maintenance, and
- Interval between detection and repair of the leak.

3.1.3.1 Action Level. The instrument reading at which maintenance is required is called the "action level." The RACT action level is 10,000 ppmv. Components which have indicated instrument readings equal to or higher than this "action level" are marked for repair. Table 3-1 gives the percent of total mass emissions affected by the 10,000 ppmv action level for a number of component types. Available data indicate that a 10,000 ppmv action level provides a reasonable level of confidence that most large leaks will be detected in routine screening. However, a higher action level (e.g., 20,000 ppmv) will result in lower maintenance costs because somewhat fewer leaks will be detected. Higher action levels were considered for RACT, but the actual savings in maintenance costs are not likely to be large compared to the high credits to be realized from product recovery. In addition, the monitoring instruments presently in use for fugitive emission surveys have a maximum meter reading of 10,000 ppm. Add-on dilution devices are available to extend the range of the meter beyond 10,000 ppm, but these dilution probes are inaccurate and impractical for fugitive emissions monitoring surveys. Other considerations for selection of the action level are component specific.

For valves, the selection of an action level for defining a leak is a tradeoff between the desire to locate all significant leaks and

Table 3-1. PERCENT EMISSIONS FROM SOURCES WITH INSTRUMENT READINGS EQUAL TO OR GREATER THAN 10,000 ppmv

Component	Percent of mass emissions for 10,000 ppmv action level[a]
Valves[b]	86 (87)
Relief valves[c]	77 (77)
Compressor seals[b,d]	93 (93)
Pump seals[b]	79 (79)

xx = VOC emission values.
(xx) = Total hydrocarbon values.

[a]Fraction of total emissions from a given source type that is attributable to sources with instrument readings equal to or greater than the 10,000 ppmv action level.

[b]Reference 3.

[c]Reference 4.

[d]Based on a weighted average of compressor seals in wet gas and natural gas liquids service. Reference 5.

to ensure that emission reductions are possible through maintenance. Although test data show that some valves with meter readings less than 10,000 ppm have significant emission rates, most of the major emitters have meter readings greater than 10,000 ppm. Information obtained through EPA in-house testing and industry testing[6,7] indicates that in actual fugitive emission surveys, most sources of VOC have meter readings which are very low or very high. Maintenance programs on valves have shown that emission reductions are possible through on-line repair for essentially all valves with non-zero meter readings. There are, however, cases where on-line repair attempts result in an increased emission rate. The increased emissions from such a source could be greater than the emission reduction if maintenance is attempted on low leak valves. These valves, however, should be able to achieve essentially 100-percent emission reduction through off-line repair because the leaking valves can either be repacked or replaced. The emission rates from valves with meter readings greater than or equal to 10,000 ppm are significant enough so that an overall emission reduction will occur for a leak detection and repair program with a 10,000 ppm action level.

For pump and compressor seals, selection of an action level is different because the cause of leakage is different. Compared to valves which generally have zero leakage, most seals leak to a certain extent while operating normally. The routine leakage is generally low, so these seals would tend to have low instrument meter readings. With time, however, as the seal begins to wear, the concentration and emission rate are likely to increase. At any time, catastrophic seal failure can occur with a large increase in the instrument meter reading and emission rate. As shown in Table 3-1, over 90 percent of the emissions from compressor seals and approximately 80 percent of the emissions from pumps are from sources with instrument meter readings greater than or equal to 10,000 ppm. Properly designed, installed, and operated seals have low instrument meter readings, and the bulk of the pump and compressor seal emissions are from seals that have worn out or failed such that they have a concentration equal to or greater than 10,000 ppm.

3.1.3.2 Inspection Interval. The length of time between inspections depends on the expected occurrence and recurrence of leaks after a piece of equipment has been checked or repaired. The choice of the interval affects the emission reduction achievable since more frequent inspection will result in leaking sources being found and fixed sooner. The leak occurrence and recurrence correction factor for quarterly inspections is estimated to be 90 percent. The estimated percentages of components found leaking with quarterly inspections are given in Table 3-2.

3.1.3.3 Allowable Interval Before Repair. If a leak is detected, the equipment should be repaired within a certain time period. The allowable repair time should reflect an interest in eliminating a source of VOC emissions but should also allow the plant operator sufficient time to obtain necessary repair parts and maintain some degree of flexibility in overall plant maintenance scheduling. The determination of this allowable repair time will affect emission reductions by influencing the length of time that leaking sources are allowed to continue to emit pollutants. Some of the components with instrument readings in excess of the leak definition action level may not be able to be repaired until the next line shutdown.

The allowable interval before repair for RACT is chosen to be 15 days. The percent of emissions from a component which would be affected by the 15-day repair interval if all other contributing factors were 100 percent efficient is 98 percent. The emissions which occur between the time the leak is detected and repair is attempted are increased with longer allowable repair intervals.

3.1.3.4 Achievable Emission Reduction. Repair of leaking components will not always result in complete emission reduction. To estimate the emission reduction from repair of equipment, it was assumed that leaks are reduced by maintenance to an instrument reading of 1,000 ppmv. The percent emissions reduction due to repair of leaking valves, pressure relief valves, and compressor seals is derived from the average emission rates of these components above 10,000 ppmv and at 1,000 ppmv as shown in Table 3-3.

Table 3-2. ESTIMATED PERCENT COMPONENTS LEAKING PER INSPECTION FOR QUARTERLY MONITORING

Component Type	Estimated Percent of Components Leaking Initially[a]	Estimated Annual Percentage of Components Found Leaking with Quarterly Inspections
Valves	18[b]	18.5[c]
Relief Valves	19[d]	7.6[e]
Compressor Seals	46.7[d,f]	18.7[e]
Pump Seals	33[b]	39.4[c]

[a] Approximate fraction of components having an instrument reading equal to or greater than 10,000 ppmv prior to repair.

[b] Reference 3.

[c] Reference 8.

[d] Reference 9.

[e] Annual percent recurrence factors have been applied for quarterly inspections for relief valves and compressor seals to determine the percentage of sources maintained. It is assumed that 10 percent of sources initially detected are found with quarterly monitoring, therefore, the annual average is calculated as: 0.10 x 4 = 0.4. The estimated annual percentage of components found leaking at quarterly inspections is calculated as:

$$\text{Estimated percentage of components found leaking with quarterly inspections} = \left(\text{Percent of components leaking initially}\right) \times 0.4$$

[f] Reference 5.

Table 3-3. AVERAGE EMISSION RATES FROM COMPONENTS ABOVE 10,000 ppmv AND AT 1,000 ppmv

Component type	Average emission rate from sources above 10,000 ppmv,[a] kg/day	Average emission rate from sources at 1,000 ppmv,[b] kg/day	Percent reduction[c]
Valves	0.86 (2.3)	0.015 (0.017)	98 (99)
Compressor Seals[d]	18 (39)	0.36 (0.78)	98 (98)
Relief valves	1.3 (18.2)	0.141 (0.146)	89 (99)

xx = VOC emission values.
(xx) = Total hydrocarbon values.

[a]Emission factor for leaking sources. Calculated by multiplying the baseline emission factor (Table 2-1) times the percent emissions with instrument readings greater than 10,000 ppmv (Table 3-1), divided by the percent components with instrument readings greater than 10,000 ppmv (Table 3-2).

[b]Assumed emission factor for leaking sources that have been successfully repaired (on the average, repair is not perfect).

[c]Immediate percent reduction in emissions due to successful on-line leak repair.

[d]Reference 5.

3.1.3.5 Development of Controlled Emission Factors. There are two models available for estimating emission reduction efficiency from leak detection and repair programs. Controlled emission factors used in this document are calculated using both models. The first model (the computer leak detection and repair (LDAR) model[10]) is applied to valves and pumps. It is the preferred model because it incorporates recently available data on leak occurrence and recurrence and data on the effectiveness of simple in-line repair. These data are not available for relief valves and compressor seals. Therefore, a second model (The ABCD model) is applied to relief valves and compressor seals. The ABCD model can be expressed mathematically by the following equation:[11]

$$\text{Emission reduction efficiency} = A \times B \times C \times D$$

Where:

A = Theoretical Maximum Control Efficiency = fraction of total mass emissions for each source type with instrument readings greater than the action level (Table 3-1).

B = Leak Occurrence and Recurrence Correction Factor = correction factor to account for sources which start to leak between inspections (occurrence) and for sources which are found to be leaking, are repaired and start to leak again before the next inspection (recurrence), and for sources not repaired.

C = Noninstantaneous Repair Correction Factor = correction factor to account for emissions which occur between detection of a leak and subsequent repair; that is, repair is not instantaneous.

D = Imperfect Repair Correction Factor = correction factor to account for the fact that some sources which are repaired are not reduced to zero emission levels. For computational purposes, all sources which are repaired are assumed to be reduced to an emission level equivalent to an instrument reading of 1,000 ppmv.

The ABCD model control efficiencies for relief valves and compressor seals, however, have been modified to correct for the accuracy of the

engineering judgment employed to derive one of the model inputs as discussed in the AID.[10] The accuracy of the judgment was approximated by the comparison of the LDAR model and the ABCD model control efficiencies for valves, as:[9]

$$\text{LDAR Control Effectiveness} \approx \left(\text{ABCD Model Control Effectiveness}\right) \times \left(\frac{\text{Valve LDAR Model Control Effectiveness}}{\text{Valve ABCD Model Control Effectiveness}}\right)$$

Emissions reduction efficiencies are presented in Table 3-4, as are controlled emission factors. The controlled emissions factors are calculated as:

$$\text{Controlled Emission Factor} = \text{Baseline Factor} - \left[\text{Baseline Factor} \times \text{Emission Reduction Efficiency}\right]$$

using the baseline emission factors in Table 2-2.

3.2 EQUIPMENT SPECIFICATIONS

Fugitive emissions may be reduced by using process equipment designed to prevent leakage. Equipment specifications are considered here only for control of emissions from control valves and open-ended lines.

3.2.1 Gas-Operated Control Valves

VOC emissions from pneumatic control valves result when field gas or flash gas is used as the operating medium. These emissions can be eliminated by switching to the use of compressed air or nonVOC gas such as methane. This will require installation of an air compression system and/or reconnection of the appropriate pressure supply lines.

3.2.2 Open-Ended Lines

Fugitive emissions from open-ended lines are caused by leakage through the seat of a valve upstream of the open end of the line. Fugitive emissions from open-ended lines can be controlled by installing a cap, plug, flange, or second valve to the open end of the line. In the case of a second valve, the upstream valve should always be closed first after the use of the valves. Each time the cap, plug, flange, or second valve is opened, any VOC which has leaked through the first valve seat will be released. The control efficiency will depend on

Table 3-4. CONTROLLED EMISSION FACTORS FOR QUARTERLY LEAK DETECTION AND REPAIR

Equipment Item	Baseline Emission Factor[a] (kg/day)	Control Efficiency (%)	Controlled Emission Factor (kg/day)
Valves	0.18 (0.48)	77 (77)[b]	0.041 (0.11)
Relief Valves	0.33 (4.5)	63 (69)[c]	0.12 (1.4)
Compressor Seals	6.4 (18)	83 (81)[d]	1.1 (3.4)
Pump Seals	1.2 (1.5)	58 (58)[b]	0.50 (0.63)

xx = VOC emissions factor

(xx) = THC emission factor

[a]From Table 2-2.

[b]From LDAR Model. Reference 8.

[c]From ABCD Model, corrected as described in Section 3.1.3.5. Reference 9.

[d]Reference 5.

such factors as frequency of valve use, valve seat leakage, and material that may be trapped in the cap or plug. Annual VOC emissions from a leaking open-ended valve are approximately 100 kg.[10] Assuming that open-ended lines are used an average of 10 times per year, that 0.1 kg of trapped organic material is released when the valve is used, and that all of the trapped organics released are emitted to atmosphere, the annual emissions from closed off open-ended lines would be 1 kg. This would be a 99 percent reduction in emissions. Due to the conservative nature of these assumptions, a 100 percent control efficiency has been used to estimate the emission reductions of closing off open-ended lines.

3.2.3 Compressor Seals

Centrifugal and rotary compressors are both driven by rotating shafts. Emissions from these types of compressors can be controlled by the use of mechanical seals with barrier fluid (liquid or gas) systems or by the use of liquid film seals. In both of these types of seals, a fluid is injected into the seal at a pressure higher than the internal pressure of the compressor. In this way, leakage of the process gas to atmosphere is prevented except when there is a seal failure. As in the case of pumps, seal fluid degassing vents must be controlled with a closed vent system to prevent process gas from escaping from the vent.

Reciprocating compressors involve a piston, cylinder, and drive-shaft arrangement. Since the shaft motion is linear, a packing gland arrangement is normally employed to prevent leakage around the moving shaft. This type of seal can be improved by inserting one or more spacer rings into the packing and connecting the void area or areas thus produced to a collection system through vents in the housing. This is referred to as a "scavenger" system. As with other fugitive emission collection systems, these vents must be controlled to prevent fugitive emissions from entering the atmosphere. However, venting the seal does not eliminate emissions from reciprocating compressors entirely, because emissions can still occur into the distance piece area. As shown in Figure 3-1, these leaks can be controlled by enclosing the distance piece area and installing suitable piping to vent the emissions either

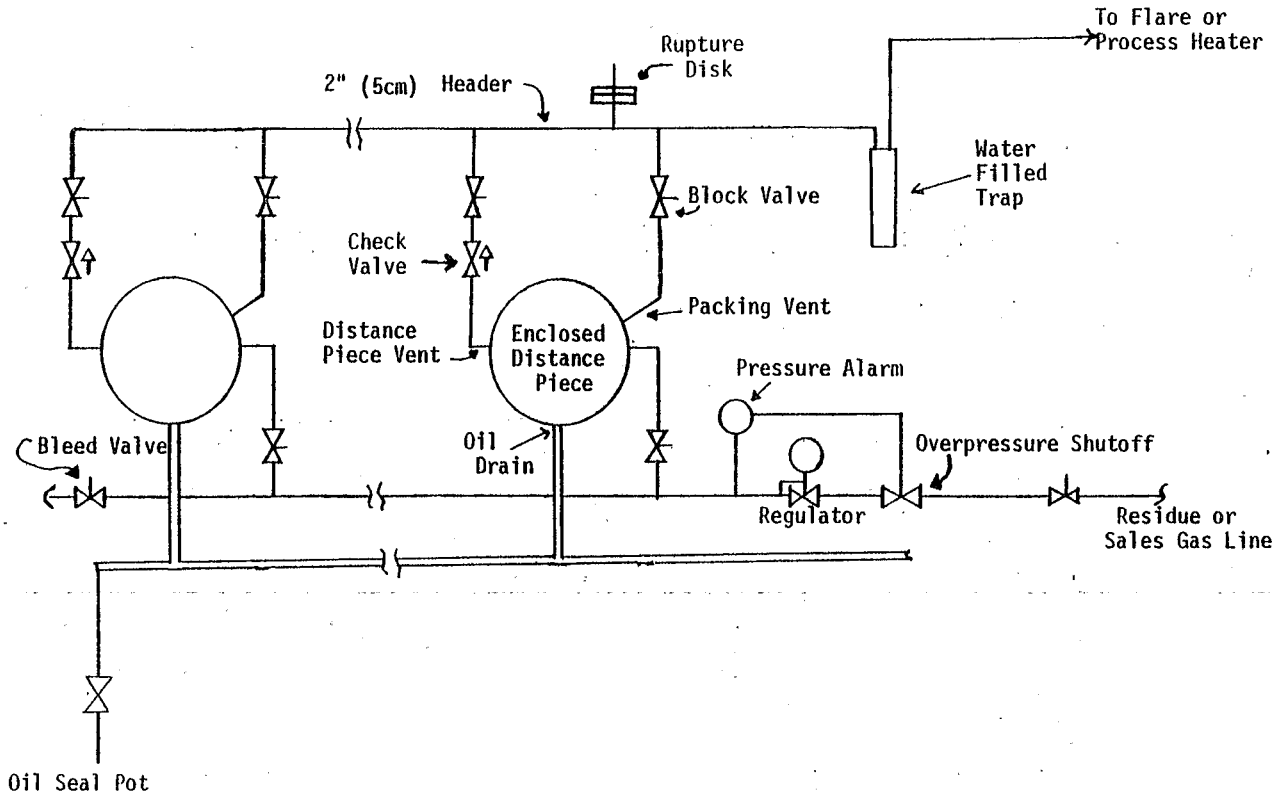

Figure 3-1. COMPRESSOR DISTANCE PIECE PURGE SYSTEM

to a flare, a plant process heater, or back into a low pressure point in the process.[13] For the latter two cases, an auxilliary compressor may be required to compress the vent stream to a usable pressure. Purging the distance piece with natural gas could be performed to keep the enclosure above the upper explosive limit and to ensure a nonexplosive atmosphere.

Obtaining a good seal at the distance piece door and at the point where emissions are vented from the distance piece or seal area is necessary for maintaining a sufficient pressure (e.g., 2 to 5 psig). Block valves should also be installed in order to close vent lines during compressor shutdown periods. This will prevent hydrocarbon vapors from entering the work place and air from entering the vent system during compressor maintenance. There may be instances where retrofitting of such a vent control system to a compressor distance piece may be infeasible for safety reasons. Therefore, the application of this preventive program as a retrofit will have to be evaluated on a case-by-case basis.

3.3 OTHER CONTROL STRATEGIES

This section discusses two fugitive emission control strategies for valves other than the quarterly leak detection and repair procedures discussed above. These strategies are limited in application to valves, because the other component types (pumps, compressors, and relief valves) are relatively few in number. The statistics used in estimating the effectiveness of the alternative strategies are inappropriate for small populations of components. For example, it is difficult to quantify a "low leak frequency" in reference to a population of six pumps at a medium-sized gas plant. There are also differences between valves and other component types in the way that leaks occur. Valves develop leaks slowly over time with small percent emission increases over a given time interval. Other component types, however, may leak at very low levels over a long period of time prior to a sudden equipment failure that results in a very high emission rate. Therefore, leak history of individual components other than valves may not be a good indicator of the likelihood of a leak in the future. This is an important consideration when selecting an appropriate monitoring frequency for a particular component type.

These strategies should be considered alternatives to quarterly leak detection and repair to allow process units the flexibility to meet a level of performance using control procedures considered most appropriate by that process unit. Process units which currently have relatively few leaking valves because of good design or existing control procedures would be most likely to benefit from these strategies if they were included in regulations adopted by a State agency. Thus, these alternative control strategies might be included in State regulations as alternative standards to quarterly leak detection and repair. Before implementing one of these alternative control strategies, however, an owner or operator should be required to notify the Director of the State agency.

3.3.1 General

The emission reduction and annualized cost of a quarterly leak detection and repair program depend in part on the number of valves found leaking during inspections. Since about 95 percent of the components to be monitored in a gas plant are valves, most of the cost of detecting leaks in a process unit can be attributed to valves. In general, few leaks mean VOC emissions are low. Consequently, the amount of VOC emissions that could be reduced through a leak detection and repair program and the product recovery credit associated with the program would be small. As a result, the annualized cost of a leak detection and repair program for a process unit increases as the number of leaks detected and repaired decreases. As the percent of valves found leaking decreases the product recovery credit decreases. The direct cost for monitoring, however, remains the same because the number of valves which must be monitored remains the same. Therefore, the cost effectiveness (annualized cost per megagram of emissions controlled) of a leak detection and repair program varies with the number of valves (or the percent of valves) which leak within a process unit. The cost effectiveness for a quarterly leak detection and repair program for valves appears reasonable for leak percentages of about one percent or higher as shown in Figure 3-2.[14]

A process unit averaging about one percent of valves leaking will sometimes have less than one percent of valves leaking and sometimes have more than one percent leaking. Statistically, if a process unit averaged one percent of valves leaking, then the percent of valves found leaking

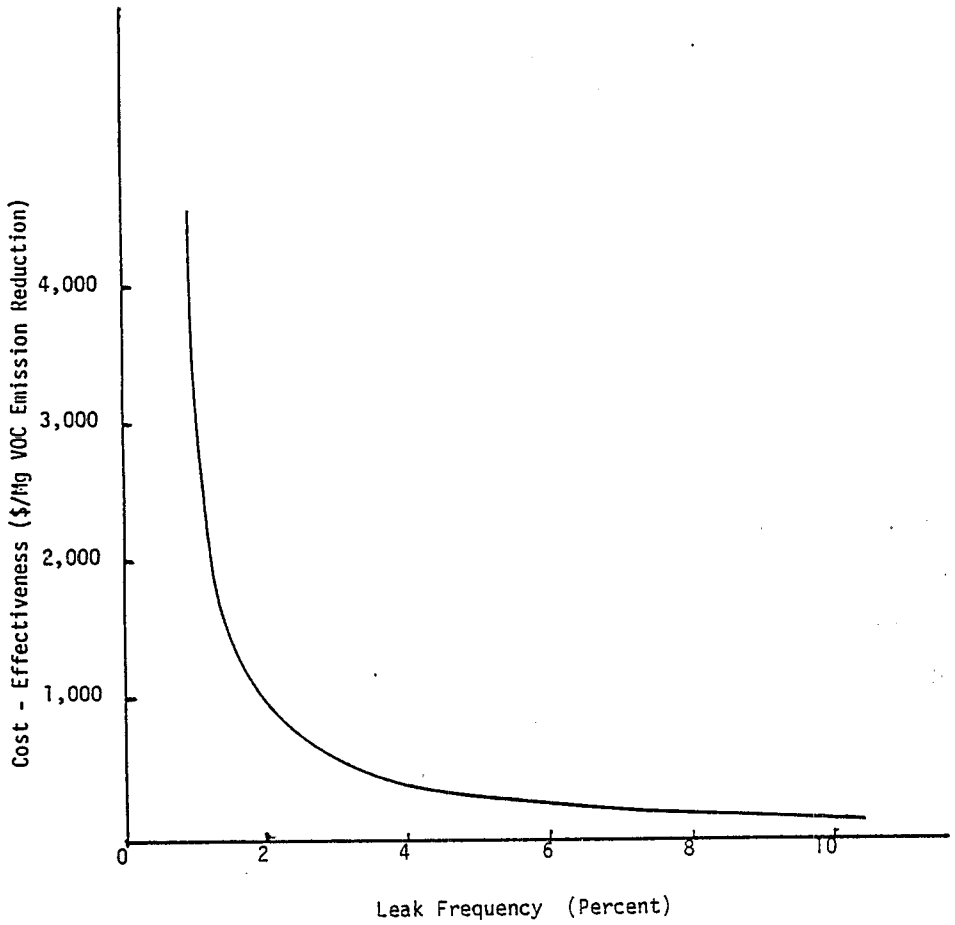

Figure 3-2. Cost-effectiveness of Quarterly Leak Detection and Repair of Valves With Varying Initial Leak Frequency

during a random inspection would exceed two percent less than five percent of the time. Two percent of valves found leaking is a reasonable criterion to judge the applicability of alternative control strategies for valves.

3.3.2 Allowable Percentage of Valves Leaking

A State regulation incorporating an alternative control strategy based on an "allowable percentage of valves leaking" would require a process unit to limit the number of valves leaking at any time to a certain

percentage of the number of valves to be monitored. As discussed above, it appears that two percent of valves leaking represents a reasonable performance level for an allowable percentage of valves leaking.

This type of regulation would require the owner or operator to conduct a performance test at least once a year by the applicable test method. Additional performance tests could be requested by the State. A performance test would consist of monitoring all valves. All components other than valves would be subject to quarterly leak detection and repair. The percentage of valves leaking would be determined by dividing the number of valves for which a leak was detected by the number of valves monitored including known leaks that are awaiting shutdown repair. If the results of a performance test showed that the percentage of valves leaking was greater than the performance level of two percent of valves leaking, then the process unit would be in violation of the State regulation.

Incorporating this type of alternative control strategy in the State regulation would provide the flexibility of a performance standard. Compliance with the regulation could be achieved by the method deemed most appropriate by the plant. The plant could implement the quarterly leak detection and repair program for valves to comply with the regulation or it could implement a program of their choosing for valves to comply with the performance level in the regulation.

3.3.3 Alternative Work Practice for Valves

A State regulation incorporating an alternative control strategy for valves based on "skip-period" monitoring would require that a plant attain a "good performance level" on a continual basis in terms of the percentage of leaking valves. As discussed above, it appears that two percent of valves leaking represents a "good performance level."

This type of regulation would require the owner or operator to begin with implementation of a quarterly leak detection and repair program for valves. If the desired "good performance level" of two percent of valves leaking was attained for valves for a certain number of consecutive quarters, then one or more of the subsequent quarterly leak detection and repair periods for these valves could be skipped.

This strategy is generally referred to as "skip-period" monitoring. All other components would be subject to quarterly leak detection and repair intervals.

If implementation of the quarterly leak detection and repair program showed that two percent or less of the valves were leaking for i consecutive quarters, then m quarterly inspections may be skipped. If the next inspection period also showed that the "good performance level" was being achieved, then m quarterly inspections could be skipped again. When an inspection period showed the "good performance level" was not being achieved, then quarterly inspections of valves would be reinstituted. If i consecutive quarterly inspections then showed again that the good performance level was being achieved, then m quarterly inspections could be skipped again.

As mentioned above, two percent of valves leaking represents a good level of performance. Table 3-5 illustrates how "skip-period" monitoring might be implemented in practice. In this case, the "good performance level" must be met for five consecutive quarters (i=5) before three quarters of leak detection could be skipped (m=3). If the quarterly leak detection and repair program showed that two percent or less of the valves in a plant were leaking for each of five consecutive quarters, then three quarters could be skipped following the fifth quarter in which the percent of these valves leaking was less than the "good performance level." After three quarters were skipped, all valves would be monitored again on the fourth quarter. Another possible skip program would allow semi-annual monitoring following two consecutive quarters at less than the good performance level.

This strategy would permit a plant that has consistently demonstrated it is meeting the "good performance level" to monitor valves annually instead of quarterly. Using this approach, a plant could optimize labor and capital costs to achieve the good level of performance by developing and implementing its own leak detection and repair procedures or installing valves with lower probabilities of leaking. Compared to a standard based on an "allowable percentage of valves leaking," where not achieving the good performance level would be a violation of the State regulation, the penalty under the "alternative work practice" standard would only be a return to routine quarterly monitoring.

Table 3-5. ILLUSTRATION OF SKIP-PERIOD MONITORING[a]

Quarterly leak detection period	Leak rate of valves during period (%)	Quarterly action taken (monitor vs. skip)	Good performance level achieved?
1	3.1	monitor	No
2	0.8	monitor	Yes 1
3	1.4	monitor	Yes 2
4	1.3	monitor	Yes 3
5	1.9	monitor	Yes 4
6	0.6	monitor	Yes 5[b]
7	-	skip	- 1
8	-	skip	- 2
9	-	skip	- 3
10	3.8	monitor	No 4[c]
11	1.7	monitor	Yes 1
12	1.5	monitor	Yes 2
13	0.4	monitor	Yes 3
14	1.0	monitor	Yes 4
15	0.9	monitor	Yes 5[b]
16	-	skip	- 1
17	-	skip	- 2
18	-	skip	- 3
19	0.9	monitor	Yes 4[d]
20	-	skip	- 1
21	-	skip	- 2
22	-	skip	- 3
23	1.9	monitor	Yes 4[d]

[a] i=5, m=3, good performance level of 2 percent.

[b] Fifth consecutive quarter below 2 percent means 3 quarters of monitoring may be skipped.

[c] Percentage of leaks above 2 percent means quarterly monitoring reinstituted.

[d] Percentage of leaks below 2 percent means 3 quarters of monitoring may be skipped.

3.4 OTHER CONSIDERATIONS

This section identifies and discusses other considerations that a State agency may wish to address when drafting a regulation. These considerations include components which are difficult to monitor, small process units, and unit turnarounds.

3.4.1 Difficult-to-monitor Components

Some valves may be difficult to monitor because access to the valve bonnet is restricted or the valves are located in elevated areas. These valves might be monitored by the use of a ladder or scaffolding. Valves which could be monitored by the use of a ladder or which would not require monitoring personnel to be elevated higher than two meters should be monitored quarterly. However, valves which require the use of scaffolding or which require the elevation of monitoring personnel higher than two meters above permanent support surfaces might be exempted from quarterly monitoring provided they are monitored annually.

3.4.2 Small Process Unit

The net annual cost and emission reduction of performing a quarterly leak detection and repair program is principally related to the number of equipment pieces in a gas processing plant. In gas plants with very small throughputs it is reasonable to assume that VOC emissions would not become a large percentage of the gas processed regardless of the number of pieces of equipment involved. Further, small non-complex gas plants are often manned with a minimum number of operators so that outside personnel may need to be used to perform the monitoring. Figure 3-3 shows the cost effectiveness of a quarterly leak detection and repair program as a function of gas plant throughput based on these considerations.[15] Based on this curve, States may wish to consider exempting from the RACT requirements non-complex gas plants (plants that do not fractionate the mixed natural gas liquids) that have design throughputs of less than 10 million scfd.

3.4.3 Unit Turnarounds

A State agency might wish to consider a provision in its regulations which would allow the agency Director to order an early unit shutdown for repair of leaking components in cases where the percentage of

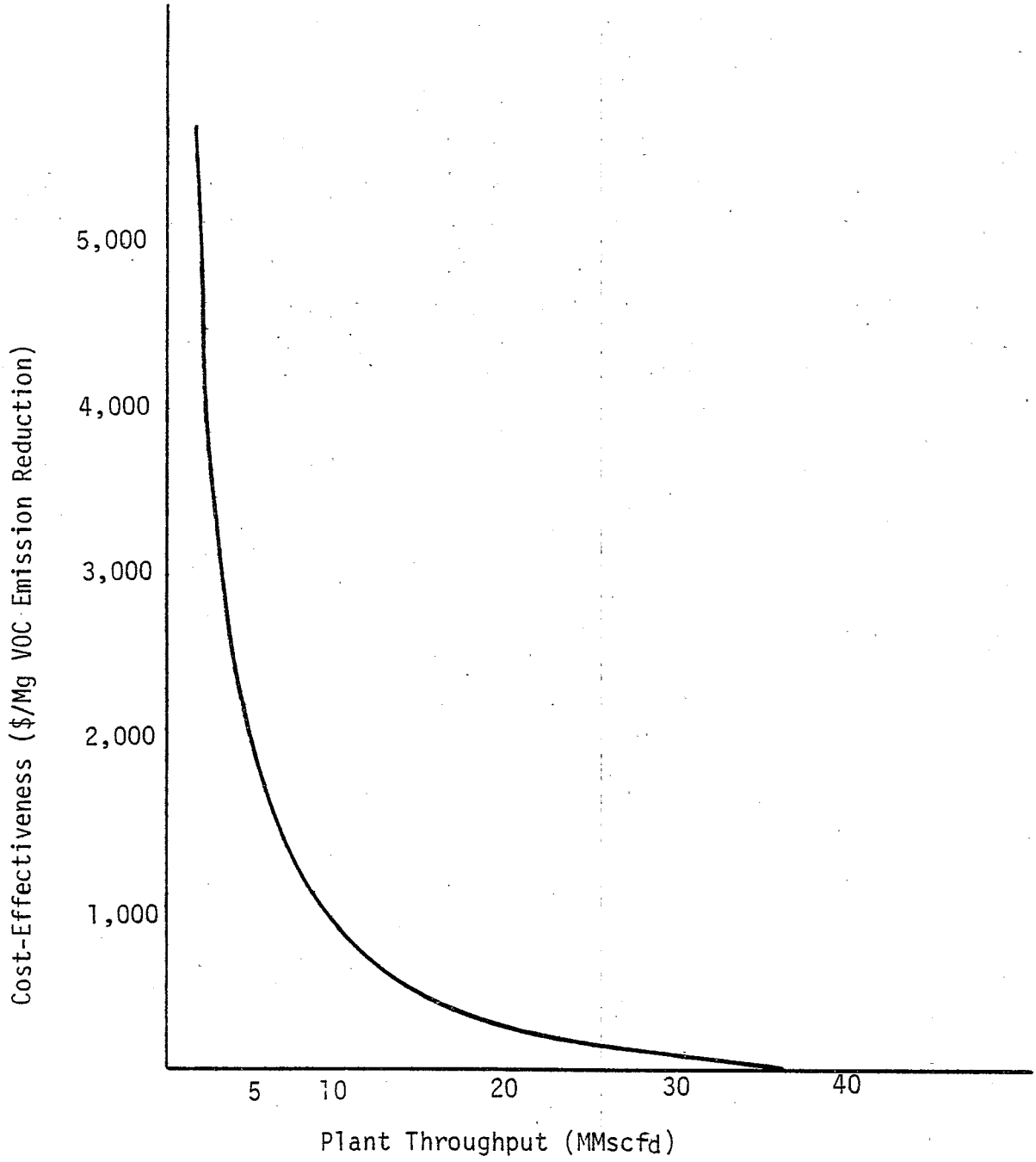

Figure 3-3. Cost Effectiveness of Quarterly Leak Detection and Repair for Small Gas Plants

leaking components awaiting repair at unit turnaround becomes excessive. Use of such a provision, however, must be carefully considered in terms of the emissions reduction achievable and the costs to the process unit in production down-time and repair cost.

Alternative methods of treating delay of repair could also be considered by a State or local agency in reducing the cumulative number of unrepairable equipment components. For instance, delays of repair to the next scheduled process unit shutdown (or turnaround) could be allowed under circumstances where it is technically infeasible to repair the component in-place/on-line (i.e., without a unit shutdown) or where replacement parts have been depleted from once-sufficient inventory. By requiring records of delays and reasons for delays, State enforcement officers would be supplied with the data necessary to determine compliance.

3.5 REFERENCES

1. Memorandum. Rhoads, T.W., Pacific Environmental Services, Inc., to K.C. Hustvedt, EPA/CPB. Gas Plants CTG: Pump Repair Emissions Estimate. December 21, 1982.

2. Teller, James H. Advantages Found in On-Line Leak Sealing. Oil and Gas Journal, 77(29):54-59, 1979.

3. DuBose, D.A., J.I. Steinmetz, and G.E. Harris. Radian Corporation, Austin, Texas. Frequency of Leak Occurrence and Emission Factors for Natural Gas Liquid Plants. Final Report. Prepared for U.S. Environmental Protection Agency. Research Triangle Park, North Carolina. EMB Report No. 80-FOL-1. July 1982.

4. Memorandum. Henning, T.J., TRW to VOC/Onshore Production Docket. April 2, 1982. Cumulative Distribution of Mass Emissions and Percent Sources with Respect to Screening Value for Relief Valves.

5. Memorandum. K.C. Hustvedt, EPA:CPB, to James F. Durham, EPA:CPB, Revised Gas Plant Compressor Seal Emission Factor. February 10, 1983.

6. Letter w/enclosures from H. H. McClure, Texas Chemical Council, to W. Barber, OAQPS, EPA. June 30, 1980.

7. Lee, Kun-chieh, et al. Union Carbide Corporation. A Fugitive Emission Study in a Petrochemical Manufacturing Unit. Paper presented at annual APCA meeting. Montreal, Quebec. June 22-27, 1980.

8. Memorandum. Rhoads, T.W., Pacific Environmental Services, Inc., to Docket A-80-20-B. Evaluation of the Effects of Leak Detection and Repair on Fugitive Emissions in the Onshore Natural Gas Processing Industry using the LDAR Model. November 1, 1982.

9. Memorandum. Rhoads, T.W., Pacific Environmental Services, Inc., to Docket Number A-80-20-B. Calculation of Controlled Emission Factors for Pressure Relief Valves and Compressor Leaks. November 1, 1982.

10. Fugitive Emission Sources of Organic Compounds. Additional Information on Emissions, Emission Reduction, and Costs. U. S. Environmental Protection Agency. EPA-450/3-82-010. April 1982.

11. Tichenor, B.A., K.C. Hustvedt, and R.C. Weber. Controlling Petroleum Refinery Fugitive Emissions Via Leak Detection and Repair. Symposium on Atmospheric Emissions from Petroleum Refineries. Austin, Texas. EPA-600/9-80-013. November 6, 1979.

12. VOC Fugitive Emissions in Petroleum Refining Industry-Background Information for Proposed Standards. U.S. Environmental Protection Agency, Research Triangle Park, NC. EPA-450/3-81-015a. November 1982.

13. Memorandum. K.C. Hustvedt, EPA:CPB, to James F. Durham, EPA:CPB, Cost Basis for Compressor Vent Control System. February 23, 1983.

14. Memorandum. Dimmick, Fred, EPA/SDB, to K.C. Hustvedt, EPA/CPB. Natural Gas/Gasoline Processing LDAR Model Results. January 24, 1983.

15. Memorandum. T.W. Rhoads, Pacific Environmental Services, Inc., to K.C. Hustvedt, EPA/CPB. Cost Effectiveness of RACT as a Function of Throughput for Small Gas Plants. December 20, 1982.

4.0 ENVIRONMENTAL ANALYSIS OF RACT

This chapter discusses the environmental impacts that would result from implementing reasonably available control technology (RACT), which is presented in Section 4.1. The primary emphasis is a quantitative assessment of VOC emissions in the absence of RACT (baseline emissions) and after implementation of RACT. The impacts of RACT upon water pollution, solid waste, and energy consumption are also addressed in this chapter.

4.1 REASONABLY AVAILABLE CONTROL TECHNOLOGY (RACT) PROCEDURES

RACT procedures include weekly visual inspection of pumps and quarterly monitoring of pumps, valves, compressors, and relief valves. Relief valves should be monitored and repaired if necessary after they have vented to the atmosphere. Routine instrument monitoring is not necessary for flanges and connections. Any component that appears to be leaking on the basis of sight, smell, or sound should be repaired. In addition, difficult-to-monitor valves may require less frequent than quarterly monitoring. Except when the open end is in use (e.g., relief valves and double block and bleed valves), open-ended lines should be sealed with a second valve, a blind flange, a cap, or a plug. In the case of a second valve, the upstream valve should be closed first after each use.

Compressor seals should be monitored quarterly, however, some plant owners and operators may experience difficulty in reducing VOC concentrations to less than 10,000 ppmv. Moreover, repair of compressor seals often necessitates a potential or complete process unit shutdown because compressors are generally not spared. Consequently, plants may find it preferable to install a compressor vent control system (see Section 3.1.2.2). However, retrofitting existing compressors with these systems may pose a safety problem. Because of the problems associated with quarterly monitoring or with

installing equipment controls in certain cases, RACT for compressors, therefore, will be determined on a case-by-case basis.

Quarterly monitoring should be performed according to EPA Reference Method 21, and a source is considered leaking if monitoring results in an instrument meter reading equal to or greater than 10,000 ppmv. As discussed in Section 3.1.1, a soap solution may be applied to certain equipment as a preliminary screening technique for leakage. A soap score equivalent to 10,000 ppmv is not specified in this guideline document because soap scoring is not applicable to all source types (see Section 3.1.1) and because it involves a subjective evaluation of bubble formation over a specified period of time. However, states may wish to allow plant owners or operators to use the soap score method based on a correlation between soap scoring and instrument readings for sources where soap scoring is applicable. Leaking components should be tagged and repaired within 15 days. In those instances where a leak cannot be repaired within 15 days because of interference with plant operations, the leak should be repaired at the next line shutdown.

RACT should apply only to equipment containing or contacting a process stream with a VOC concentration of 1.0 percent by weight or more. The purpose of this cutoff is to exclude equipment in product natural gas service, which contains much less than 1.0 percent by weight VOC. Equipment with process streams containing relatively low percentages of VOC (i.e., between 1.0 and 10 percent) contribute a significant portion of total emissions from natural gas plants and, therefore, are subject to RACT requirements. RACT does not apply to equipment operating under vacuum and equipment in heavy liquid service. An equipment component is in heavy liquid service if the percent evaporated is less than 10 percent at 150°C as determined by ASTM Method D-86. RACT does not apply to wet gas service reciprocating compressors in plants that do not have a VOC control device such as a flare or a continuously burning process heater or boiler. Further, due to the high cost effectiveness of monitoring in small plants, plants with less than 10MMcfd capacity that do not fractionate natural gas liquids are exempt from the RACT monitoring requirements.

4.2 AIR POLLUTION

Implementation of RACT would reduce fugitive emissions of VOC from gas plants significantly. There are no adverse VOC emission impacts associated with RACT.

4.2.1 Development of Emission Levels

To estimate the VOC emission level associated with RACT, control efficiencies and emission factors were determined for each type of component (e.g., valves, pumps). The baseline emission factors for process equipment, which represent emissions in the absence of RACT, were previously presented in Chapter 2 (Table 2-1). Controlled emission factors were developed for valves, pressure relief valves, pump seals and compressor seals that would be controlled by the implementation of a leak detection and repair program. Control efficiencies and controlled emission factors for pressure relief valves and compressor seals were derived from the ABCD model correction factors and the leak detection and repair (LDAR) model as discussed in Chapter 3. Control efficiencies and controlled emission factors for valves and pump seals were derived directly from the LDAR model as described in Chapter 3. For RACT requirements specifying equipment controls (i.e., open-ended lines), it is assumed that zero emissions result from the controlled source. The controlled emission factors for each component type are presented in Table 3-4.

In calculating the total VOC fugitive emissions from model plants controlled under RACT, the controlled emission factors were multiplied by the number of pieces of equipment for each model plant given in Table 2-2. An example calculation for estimating emissions from model plant B under RACT is shown in Table 4-1. Total annual model plant emissions for each component type are presented in Table 4-2 for both baseline and RACT levels of control.

4.2.2 Emission Reduction

The emission reduction expected from the implementation of RACT can be determined for each model plant. The emission reduction is the difference between the fugitive emissions before RACT is implemented and the fugitive emissions after RACT is implemented. These emissions

Table 4-1. EXAMPLE CALCULATION OF VOC FUGITIVE EMISSIONS FROM MODEL PLANT B UNDER RACT

Component	Number of sources in model plant[a] (N)	Controlled emission factor, kg/day/source (E)	Total emissions, kg/day (N x E)
Valves	750	0.041 (0.11)[b]	31 (82)
Relief valves	12	0.12 (1.4)[b]	1.4 (17)
Open-Ended lines	150	0.0 (0.0)[c]	0 (0)
Compressor seals	6	1.1 (3.4)[b,d]	6.6 (20)
Pump seals	6	0.50 (0.63)[b]	3.0 (3.8)
Flanges and connections	3,000	0.011 (0.026)[b]	33 (78)
	Total Emissions		75 (200)

xx = VOC emission values.
(xx) = Total hydrocarbon emission values.

[a]From Table 2-2.

[b]From Table 3-4. Controlled emission factors are derived from the baseline emission factors in Table 2-1.

[c]Assumes installation of second valve, blind flange, cap, or plug with 100 percent control efficiency.

[d]Based on leak detection and repair. Installation of a compressor vent control system would achieve 100 percent control efficiency.

Table 4-2. ANNUAL VOC EMISSIONS ON A COMPONENT TYPE BASIS FOR EACH MODEL PLANT[a]

Component type	Emissions under baseline control,[b] Mg/yr — Model plant A		Emissions under baseline control,[b] Mg/yr — Model plant B		Emissions under baseline control,[b] Mg/yr — Model plant C		Emissions under RACT,[c] Mg/yr — Model plant A		Emissions under RACT,[c] Mg/yr — Model plant B		Emissions under RACT,[c] Mg/yr — Model plant C	
Valves	16	(44)	49	(130)	160	(440)	3.7	(10)	11	(30)	37	(100)
Relief valves	0.47	(6.6)	1.5	(20)	4.7	(66)	0.18	(2.0)	0.53	(6.1)	1.8	(20)
Open-ended lines	6.2	(9.5)	19	(29)	62	(95)	0	(0)[d]	0	(0)[d]	0	(0)[d]
Compressor seals	4.6	(13)	14	(39)	46	(130)	0.8	(2.5)[e]	2.4	(7.4)[e]	8.0	(25)[e]
Pump seals	0.88	(1.1)	2.6	(3.3)	8.8	(11)	0.37	(0.46)	1.1	(1.4)	3.7	(4.6)
Flanges and connections	4.0	(9.5)	12	(28)	40	(95)	4.0	(9.5)[f]	12	(28)[f]	40	(95)[f]
Total	32	(84)	98	(250)	320	(840)	9.0	(24)	27	(73)	90	(240)

xx = VOC emission values.
(xx) = Total hydrocarbon emission values.

[a]Assumes 365 days/year operation.

[b]Emissions in the absence of RACT. From Table 2-2.

[c]Controlled emission factor (Table 3-4) x number of components (Table 2-2) x 0.365 (conversion from kg/day to Mg/yr).

[d]Assumes installation of second valve, blind flange, cap, or plug with 100 percent control efficiency.

[e]Based on quarterly leak detection and repair. However, installation of a compressor vent control system would achieve 100 percent control efficiency.

[f]No controls are specified except repair if found leaking.

are presented as "totals" in Table 4-2. The average reduction in emissions for the model plants after RACT is implemented is 71 percent for VOC and for total hydrocarbons.

4.3 WATER POLLUTION

Although fugitive emissions of VOC from gas plant equipment primarily impact atmospheric VOC emissions, they also impact water quality. In particular, leaking components handling liquid hydrocarbon streams increase the waste load entering wastewater treatment systems. Leaks from equipment can contribute to the waste load by entering drains via runoff. Implementation of RACT should reduce the waste load on wastewater treatment systems by preventing equipment leaks into the wastewater system; therefore, no adverse water pollution impact is expected.

4.4 SOLID WASTE DISPOSAL

The quantity of solid waste generated by the implementation of RACT would be insignificant. The solid waste generated would consist of used valve packings and components which are replaced.

4.5 ENERGY

Implementation of RACT is expected to require little or no energy consumption at gas plants. Instead, implementation of RACT will save energy by reducing emissions to atmosphere of methane, ethane, and VOC. Table 4-3 shows the amount of energy to be saved on a component basis from implementation of RACT in terms of joules and in barrels of crude petroleum. Table 4-4 shows the total energy saved per model plant.

Table 4-3. ENERGY IMPACTS ON A COMPONENT TYPE BASIS FOR MODEL PLANT B

Component Type	Emission reduction, Mg/yr[a]		Energy content of emission reduction, gigajoules/yr (bbl crude petroleum/yr equivalent)[b]		
	VOC	Methane-ethane	VOC[c]	Methane-ethane[d]	Total
Valves	38	62	1,800 (290)	3,400 (550)	5,200 (840)
Relief valves	0.97	13	46 (7.5)	720 (120)	770 (130)
Open-ended lines	19	10	890 (140)	550 (90)	1,400 (230)
Compressor seals	12	20	560 (91)	1,100 (180)	1,700 (270)
Pump seals	1.5	0.40	70 (11)	22 (3.6)	92 (15)

[a]From Table 4-2. Emission reduction determined by subtracting annual RACT emissions from annual baseline emissions for each component type.

[b]Calculated on the basis of 0.163 bbl crude per gigajoule. Heating value is assumed to be equal to that of crude petroleum production for 1978-80 of 5,800,000 Btu/bbl, Reference 1.

[c]Calculated on the basis of 47 gigajoules per megagram of VOC. Heating value is assumed to be equal to that of natural gas plant liquid production for 1978-1980 of 3,925,000 Btu/bbl (4.14 gigajoules/bbl), Reference 1. Specific gravity assumed to be 0.55, Reference 2.

[d]Calculated on the basis of 55 gigajoules per megagram of methane-ethane. Composition is assumed to be 80 percent methane and 20 percent ethane. The heats of combustion are assumed to be 23,000 Btu/lb and 22,300 Btu/lb for methane and ethane, respectively, Reference 3.

Table 4-4. ENERGY IMPACTS ON A MODEL PLANT BASIS

Model Plant	Recovered emissions, Mg/yr[a]		Energy content of emission reduction, gigajoules/yr (bbl crude petroleum/yr equivalent)[b]		
	VOC	Methane-ethane	VOC	Methane-ethane	Total
A	23	36	1,100 (170)	2,000 (320)	3,100 (490)
B	72	110	3,400 (550)	6,000 (940)	9,400 (1,500)
C	230	360	11,000 (1,700)	20,000 (3,200)	31,000 (4,900)

[a]There is no recovery credit for venting compressor seal emissions to flares or incinerators.

[b]See footnotes b, c, and d of Table 4-3.

4.6 REFERENCES

1. DOE Monthly Energy Review. January 1981. DOE/EIA-0035 (81/01).

2. Nelson, W.L. Petroleum Refinery Engineering. McGraw-Hill Book Company, Inc. New York, 1958. p. 32.

3. Perry, R.H., and C.H. Chilton, eds. Chemical Engineers' Handbook, Fifth Edition. McGraw-Hill Book Company, New York. 1973. p. 9-16.

5.0 CONTROL COST ANALYSIS OF RACT

The costs of implementing reasonably available control technology (RACT) for controlling fugitive emissions of volatile organic compounds (VOC) from equipment leaks at gas plants are presented in this chapter. Capital costs, annualized costs, and the cost effectiveness of RACT are presented. These costs have been developed for the individual equipment pieces and model plants presented in Chapter 2. To ensure a common cost basis, Chemical Engineering cost indices are used to adjust costs to June 1980 dollars.

As discussed in Section 4.1, RACT for compressor seals is quarterly leak detection and repair. In many instances, however, a compressor vent control system would be installed. For the purpose of estimating RACT cost impacts, Sections 5.1 through 5.4 are based on quarterly leak detection and repair for compressors. Additionally, compressor vent control costs are discussed in Section 5.5. Capital costs for the vent control system are included in Table 5-1.

5.1 BASIS FOR CAPITAL COSTS

Capital costs represent the total cost of starting a leak detection and repair program in existing gas plants. The capital costs for the implementation of RACT include the purchase of VOC monitoring instruments, the purchase and installation of caps for all open-ended lines, the purchase and installation of a compressor vent control system, and initial leak repair. The cost for initial leak repair is included as a capital cost because it is expected to be greater than leak repair costs in subsequent quarters and is a one-time cost. The basis for these costs is discussed below and presented in Table 5-1.

5.1.1 Cost of Monitoring Instrument

The cost of a VOC monitoring instrument includes the cost of two instruments. One instrument is intended to be used as a standby

spare. The cost of $4,600 for a portable organic vapor analyzer was obtained from a manufacturer.[1]

5.1.2 Caps for Open-Ended Lines

Fugitive emissions from open-ended lines can be controlled by installing a cap, plug, flange, or second valve to the open end. Any one of these pieces of equipment is included in the definition of a "cap" for an open-ended line. For the purposes of this analysis, the cost of a cap for an open-ended line is based on a cost of $43 for a one-inch screw-on type globe valve.[2] Line sizes larger than 2" can be fitted with a reducer, or as an alternative, can be equipped with a blind flange at a similar cost. A charge of $18[4] for one hour of labor is added to the $43 as the cost for installing one cap. Therefore, the total capital cost for installing a cap on an open-ended line is $61.

5.1.3 Initial Leak Repair

The implementation of RACT will begin with an initial inspection which will result in the detection of leaking components. The number of initial leaks is expected to be greater than the number found in subsequent inspections. Because initial leak repair is a one-time cost, it is treated as a capital cost. The number of initial leaks was estimated by multiplying the percentage of initial leaks per component type by the number of components in the model plant under consideration. The repair time for fixing leaks is estimated to be 16 hours for a pump seal, 1.13 hours for a valve, and 40 hours for a compressor seal.[9, 14] These requirements are presented in Table 5-2. The initial repair costs given in Table 5-3 were determined by taking the product of the number of initial leaks, the repair time, and the hourly labor cost of $18.

5.2 BASIS FOR ANNUAL COSTS

Annual costs represent the yearly cost of operating a leak detection and repair program and the cost of recovering the initial capital investment. This includes credits for product saved as the result of the control program. The basis for the annual costs is given in Table 5-4.

5.2.1 Leak Detection Labor

The implementation of RACT requires visual and instrument monitoring of potential sources of fugitive VOC emissions. The monitoring labor-hour requirements for RACT are presented in Table 5-5. The labor-hour requirements were calculated by taking the product of the assumed number of workers to monitor a component (1 for visual, 2 for instrument), the time required to monitor, the number of components in a model plant, and the number of times the component is monitored each year. The monitoring times for the various components are 0.5 minute for visual inspection, 1 minute for valves, 5 minutes for pump and compressor seals, and 8 minutes for relief valves.[9] Monitoring labor costs presented in Table 5-6 were calculated based on a charge of $18 per hour.

5.2.2 Leak Repair Labor

Labor is needed to repair leaks which develop after initial repair. The estimated number of leaks and the labor-hours required for repair are given in Table 5-5. The repair time per component is the same as presented for initial leak repair. Leak repair costs presented in Table 5-6 were calculated based on a charge of $18 per hour.

5.2.3 Maintenance Charges and Miscellaneous Costs

The annual maintenance charge for caps is estimated to be five percent of their capital cost.[11] Annual maintenance costs include pump seal replacement costs at $140 per pump seal repair.[14] The annual cost of materials and labor for maintenance and calibration of monitoring instruments is estimated to be $3000.[11,12,13] An additional miscellaneous charge of four percent of capital cost for taxes, insurance, and capital related associated administrative costs is added for the monitoring instruments and caps.

5.2.4 Administrative Costs

Administrative and support costs associated with the implementation of leak detection and repair are estimated to be 40 percent of the sum of monitoring and leak repair labor costs. The administrative and support costs include record-keeping and reporting requirement costs.

5.2.5 Capital Charges

The life of caps for open-ended lines is assumed to be ten years and the life of monitoring instruments is assumed to be six years. The cost of repairing initial leaks was amortized over a ten-year period since it is a one-time cost.

The capital recovery cost is obtained from annualizing the installed capital cost for control equipment. The installed capital cost is annualized by using a capital recovery factor (CRF). The CRF is a function of the interest rate and useful equipment lifetime. The capital recovery can be estimated by multiplying the CRF by the total installed capital cost for the control equipment. This equation for the capital recovery factor is:

$$CRF = \frac{i(1 + i)^n}{(1 + i)^n - 1}$$

where i = interest rate, expressed as a decimal

n = economic life of the equipment, years.

The interest rate used was ten percent. The capital recovery factors and other factors used to derive annualized charges are presented in Table 5-4.

5.2.6 Recovery Credits

The reduction of VOC fugitive emissions results in saving a certain amount of VOC which would otherwise be lost. The value of this VOC is a recovery credit which can be counted against the cost of a leak detection and repair program. The recovery credits for each model plant are presented in Table 5-5. The VOC saved is valued in June 1980 dollars at $192/Mg, using a price of 40¢/gallon[15] of LPG and a specific gravity of 0.55.[16] The methane-ethane saved is valued in June 1980 dollars at $61/Mg, using a price of $1.46/Mcf[17] and an assumed composition of 80% methane and 20% ethane at standard temperature and pressure. An example calculation of product recovery credits is presented in Table 5-7 based on Model Plant B. Model Plant recovery credits are summarized in Table 5-8.

5.3 EMISSION CONTROL COSTS OF RACT

This section presents the emission control costs of implementing RACT for each of the three model plants. Both the initial costs and the annualized costs are included.

5.3.1 Initial Costs

The cost of initially implementing RACT consists of capital costs and initial leak repair. The cost of $9,200 for two monitoring instruments is the same for all model plant sizes. The capital costs for caps for open-ended lines are annualized on the basis presented in Table 5-4.

5.3.2 Annualized Costs

The annualized RACT control costs includes the initial leak detection repair costs, annual leak detection cost, and product recovery credits, as previously discussed. Table 5-9 presents the annualized costs for the model plants. The net annualized costs to implement RACT range from $3,300 for Model Plant A to a cost savings of $17,000 for Model Plant C.

5.4 COST EFFECTIVENESS OF RACT

Cost effectiveness is the annual cost per megagram of VOC controlled annually. The cost effectiveness of RACT for each model plant is the net annual cost for implementing RACT divided by the emission reduction achieved under RACT.

The cost effectiveness of implementing RACT for the model plants is presented in Table 5-9. The cost effectiveness for Model Plant A is $140/Mg VOC reduction, and a cost credit of $28/Mg and $74/Mg for Model Plants B and C, respectively.

The cost effectiveness for each individual component covered by RACT is presented in Table 5-10 based on Model Plant B. The cost of a monitoring instrument cannot be attributed to any single type of component since all components are monitored by the instrument. Therefore, the cost for each component does not include the cost of the monitoring instrument. The instrument cost is included, however, in the model plant cost effectiveness.

5.5 ANALYSIS OF COMPRESSOR VENT CONTROL SYSTEM COSTS

The cost to install a compressor vent control system is dependent upon several factors: (1) the type of compressor (reciprocating, centrifugal), (2) the presence of an existing VOC control device (flare, process heater), and (3) the type of process fluid being compressed (wet gas or natural gas liquids). Product recovery credits are not included in the compressor vent control system cost analysis

on the assumption that recovered emissions would be flared. However, the recovered emissions could be routed to a process heater resulting in a credit for the captured emissions at their fuel value.

The type compressor is important because reciprocating compressors may require additional control equipment to ensure the safety of the vent system. Also, reciprocating compressors would require instrumentation for the purge gas system. Hence, the control costs for a reciprocating compressor are treated separately from a centrifugal compressor.

The vent control system relies upon the venting of captured emissions to a VOC control device; therefore, in the absence of an existing control device, additional costs would be incurred. Further, the individual compressor control costs are dependent upon the number of compressors per plant due to fixed and variable costs associated with the vent control system. Capital and annualized costs of the compressor vent control system are presented in Table 5-11.

The cost effectiveness of the vent control system is dependent upon the factors previously discussed plus the service a compressor is in. The compressor emission factor presented in Table 2-1 is based on compressors in natural gas liquids (NGL) and wet gas service. Individually, these emission factors are 0.7 Mg/yr for wet gas service compressor seals and 5.5 Mg/yr for natural gas liquids service compressor seals. Table 5-11 also presents the cost effectiveness of compressor vent control systems under the scenarios discussed.

Table 5-1. CAPITAL COST DATA (June 1980 dollars)

1. Monitoring Instruments

2 instruments (Foxboro OVA-108)
@ $4,600/instrument[a]
Total cost is $9,200/plant

2. Caps for Open-Ended Lines

Based on cost for 5.1 cm screw-on gate valve, rated at 17.6 kg/cm² (250 psi) water, oil, gas (w.o.g.) pressure. June 1981 cost is $46.50[b], June 1980 cost is 8 percent less[c] at $43. Retrofit installation = 1 hour at $18/hour[d]. Total cost is $61/line.

3. Compressor Seal Vent Control System

A. Centrifugal Compressor Seal Piping[e]

5m	2.5cm pipe @$2.82/m	$ 14.10	
5m	5.1cm pipe @ $6.50/m	32.50	
1	5.1cm x 2.5cm tees @ $8.16	8.16	
1	2.5cm block valves @ $24.63	24.63	
1	2.5cm elbows @ $6.22	6.22	
1	pressure alarm @ 9.90	9.90	
	Total manifold piping		$ 96

Labor

10m of pipe / 30m/hr/crew = 0.33 hr for installation
0.25 hr for set-up/breakdown
0.5 hr for fabrication
1.08 hours/crew

$$1.08 \text{ crew hrs.} \times \frac{3 \text{ men}}{\text{crew}} \times \$18.00/\text{hr} = \$\ 58$$

Subtotal	$ 154	
Contingency	15	
Total		$ 170

B. Reciprocating Compressor Seals[f]

COSTS FOR EACH COMPRESSOR SEAL

Incremental Cost for Double Distance Piece	$2,500	
Contingency	250	
Total		$2,750

Table 5-1. CAPITAL COST DATA (June 1980 dollars)
(continued)

Distance Piece Piping				
Material				
2.5cm piping - 31m @ $2.82/m	$ 90			
2.5cm check valve - 1 @ $80	80			
2.5cm block valve - 2 @ $25	50			
Misc. Flanges, Fittings, etc.	160			
		$ 380		
Labor		$ 620		
	Subtotal		$1,000	
	Contingency		100	
	Total			$1,100
FIXED COSTS				
Instrumentation for Purge Gas				
Material				
Oil Seal Pot	$ 650			
Supply Regulator	350			
2.5cm Block Valve - 2 @ $25	50			
2.5cm Piping - 8m @ $2.82/m	20			
Misc. Flanges, Fittings, Etc.	160			
		$1,230		
Labor		$ 550		
	Subtotal		$1,780	
	Contingency		178	
	Total			$1,960
C. Flare				
Cost of Flare			$6,670	
	Contingency		667	
	Total			$7,340

Table 5-1. CAPITAL COST DATA (June 1980 dollars) (concluded)

D. Piping to Flare				
Material				
Inlet line from Compressor to Flare - 100m of 5.1cm pipe @ $6.50/m	$650			
Ruptured disk and holder	130			
Misc. Flares, Fittings	370			
Misc. Costs for Pipe Supports	750			
		$1,900		
Labor		$1,450		
	Subtotal		$3,350	
	Contingency		335	
	Total			$3,700

[a]One instrument used as a spare. Cost is based on Reference 1.

[b]Reference 2.

[c]Cost adjustment based on the economic indicators for pipe, valves, and fittings in April 1980 (final) vs. April 1981 (preliminary). Reference 3.

[d]Reference 4.

[e]Reference 14.

[f]Reference 8.

Table 5-2. LABOR-HOUR REQUIREMENTS FOR INITIAL LEAK REPAIR UNDER RACT

Source type	Number of components per model plant			Percent of components 10,000 ppmv[a]	Estimated number of initial leaks[b]			Repair time, hrs.	Leak Repair Labor-hours required[c]		
	A	B	C		A	B	C		A	B	C
Valves	250	750	2,500	18	45	135	450	1.13[d]	51	150	510
Relief Valves	4	12	40	19	0.76	2.3	7.6	0[e]	0	0	0
Compressor Seals	2	6	20	47	0.94	2.8	9.4	40[f]	38	110	380
Pump Seals	2	6	20	33	0.66	2.0	6.6	16[f]	11	32	110
TOTAL									100	290	1,000

[a] From Table 3-2.

[b] Number of initial leaks = number of components x percent of components equal to or greater than 10,000 ppmv.

[c] Leak repair labor-hurs = number of leaks x repair time.

[d] Weighted average based on 75 percent of the leaks repaired on-line, requiring 0.17 hours per repair, and on 25 percent of the leaks repaired off-line, requiring 4 hours per repair. Reference 10, p. B-12.

[e] Because of safety requirements it is assumed that these leaks are corrected by routine maintenance at no additional labor requirements. Reference 9.

[f] Reference 9.

Table 5-3. INITIAL LEAK REPAIR COSTS
(June 1980 dollars)

Source type	Initial Repair Costs For Model Units[a]			Initial Annualized Repair Costs for Model Units[b]		
	A	B	C	A	B	C
Valves	920	2,700	9,200	210	620	2,100
Relief Valves[c]	0	0	0	0	0	0
Compressor Seals	680	2,000	6,800	160	460	1,600
Pump Seals	200	580	2,000	46	130	460
TOTAL	1,800	5,300	18,000	420	1,200	4,200

[a]From Table 5-2, Labor Hour Requirements for Initial Leak Repair. Cost = hours x $18.00 per hour.

[b]Initial annualized repair costs for model units = Initial repair cost x capital recovery factor x 1.4. The capital recovery factor (CRF) for model units is determined through the equation:

$$CRF = \frac{i(1 + i)^n}{(1 + i) - 1}$$

where n = 10 years and i = 10 percent. Therefore, the CRF = 0.163.

[c]Because of safety requirements, these leaks are corrected by routine maintenance at no additonal labor requirements. Reference 9.

Table 5-4. BASIS FOR ANNUALIZED COST ESTIMATES

1. Capital recovery factor for capital charges	
o Caps on open-ended lines	0.163 x capital[a]
o Monitoring instruments	0.23 x capital[b]
2. Annual maintenance charges	
o Caps on open-ended lines	0.05 x capital[c]
o Monitoring instruments	$3,000[d]
o Replacement pump seals	$140[e]
3. Annual miscellaneous charges (taxes, insurance, administration)	
o Caps on open-ended lines	0.04 x capital[c]
o Monitoring instruments	0.04 x capital[c]
4. Labor charges	$18/hour[f]
5. Administrative and support costs for implementing leak detection and repair	0.40 x (monitoring + repair labor)[c]
6. Annualized charge for initial leak repairs	(estimated number of leaking components per model unit x repair time) x $18/hr[f] x 1.4[c] x 0.163[g]
7. Recovery credits	
o Nonmethane-nonethane hydrocarbons (VOC)	$192/Mg[h]
o Methane-ethane	$61/Mg[i]

[a]Ten year life, ten percent interest. Reference 11.

[b]Six year life, ten percent interest. Reference 11.

[c]Reference 11.

[d]Includes materials and labor for maintenance and calibration. Reference 11. Cost index = 242.7/209.1. References 12 and 13.

[e]Reference 14.

[f]From Table 5-2. Includes wages plus 40 percent for labor-related administrative and overhead costs. Cost (june 1980). Reference 4.

[g]Initial leak repair amortized for ten years at ten percent interest.

[h]Based on LPG price of 40¢/gallon for June 1980 and specific gravity of 0.55. References 15 and 16.

[i]Based on natural gas price of k$1.46/Mcf for June 1980 and assumed composition of 80% methane and 20% ethane at standard temperature and pressures. Reference 17.

Table 5-5. ANNUAL LEAK DETECTION AND REPAIR LABOR REQUIREMENTS FOR RACT

	Leak Detection									Leak Repair							
	Number of components per model unit						Monitoring labor hours required[c]			Percent components leaking at quarterly inspections[d]	Estimated number of leaks per year[e]			Repair time hrs	Leak repair labor hours required[f]		
Component type	A	B	C	Type of monitoring[a]	Monitoring time, min[b]	Times monitored per year	A	B	C		A	B	C		A	B	C
Valves	250	750	2,500	Instrument	1	4	33	100	330	0.185	46	139	460	1.13[g]	52	160	520
Relief Valves	4	12	40	Instrument	8	4	4.3	13	43	0.076	0.30	0.91	3.0	0[h]	0	0	0
Compressor Seals	2	6	20	Instrument	5	4	1.3	4	13	0.187	0.37	1.1	3.7	40[i]	15	44	150
Pump Seals	2	6	20	Instrument,	5	4	1.3	4	13	0.394	0.79	2.4	7.9	16[i]	13	38	130
				Visual	0.5	52	1	3	8.6								
Total							41	120	410						80	240	800

[a]Assumes that instrument monitoring requires a two-person team, and visual monitoring, one person.

[b]Reference 9.

[c]Monitoring labor-hours = number of workers x number of components x time to monitor x number of times per year. Total is minimum of 1 hour. Weekly visual monitoring requires only one worker, while instrument monitoring requires two workers.

[d]From Table 3-2.

[e]Number of leaks per year = number of components x percent components leaking at quarterly inspections.

[f]Leak repair labor-hours = number of leaks x repair time.

[g]Weighted average based on 75 percent of the leaks repaired on-line, requiring 0.17 hours per repair, and on 25 percent of the leaks, repaired off-line, requiring 4 hours per repair. Reference 10, p. 8-12.

[h]Because of safety requirements that these leaks are corrected by routine maintenance at no additional labor requirements. Reference 9.

[i]Based on pumps using mechanical seals, requiring 16 hours per repair. References 9 and 14.

Table 5-6. ANNUAL LEAK DETECTION AND REPAIR COSTS[a]
(June 1980 dollars)

Source type	Leak Detection Costs For Model Units			Repair Costs For Model Units		
	A	B	C	A	B	C
Valves	590	1,800	5,900	940	2,900	9,400
Relief Valves	77	230	770	0[b]	0[b]	0[b]
Compressor Seals	23	72	230	270	790	2,700
Pump Seals	41	130	390	230	680	2,300
TOTAL	730	2,200	7,300	1,400	4,400	14,000

[a]From Table 5-5, Annual Leak Detection and Repair Labor Requirements for RACT. Cost = hours x $18.00 per hour.

[b]Because of safety requirements safety relief valve leaks are repaired by routine maintenance at no additional cost. Reference 9.

Table 5-7. EXAMPLE CALCULATION OF PRODUCT RECOVERY COST CREDITS FOR MODEL PLANT B

Component Type	Recovered Emissions (Mg/yr)[a]		Recovered Product Value ($/yr)[b]		
	VOC	Methane-ethane	VOC	Methane-ethane	Total
Valves	38	62	7,300	3,800	11,100
Relief valves	0.97	13	190	790	980
Open-ended lines	19	10	3,600	610	4,200
Compressor seals	12	20	2,300	1,200	3,500
Pump seals	1.5	0.40	290	24	310
TOTAL	71	105	13,700	6,400	20,100

[a]From Table 4-3.

[b]Based on an average price of $192/Mg for VOC and $61 for methane-ethane. (See footnotes i and j in Table 5-4).

Table 5-8. MODEL PLANT RECOVERY COST CREDITS

Model Plant	Recovered emissions (Mg/yr)[a]		Recovered Product Value ($/yr)[b]		
	VOC	Methane-ethane	VOC	Methane-ethane	Total
A	23	36	4,400	2,100	6,500
B	71	105	13,700	6,400	20,100
C	230	360	44,000	21,000	65,000

[a]Total model plant recovered emissions are calculated using the method shown in Table 5-7 for Model Plant B.

[b]See Table 5-7, footnote b.

Table 5-9. ANNUALIZED CONTROL COSTS FOR MODEL UNITS
(thousands of June 1980 dollars)

Cost Item	Model Plant A	Model Plant B	Model Plant C
Annualized Capital Costs			
A. Control Equipment[a]			
1. Monitoring Instrument	2.1	2.1	2.1
2. Caps for Open-Ended Lines	0.51	1.5	5.1
B. Initial Repairs[b]	0.42	1.2	4.2
Operating Costs[c]			
A. Maintenance Charges			
1. Monitoring Instrument	3.0	3.0	3.0
2. Caps for Open-Ended Lines	0.16	0.46	1.6
3. Replacement Pump Seals[d]	0.11	0.34	1.1
B. Miscellaneous Charges (taxes insurance, administration)			
1. Monitoring Instrument	0.37	0.37	0.37
2. Caps for Open-Ended Lines	0.12	0.37	1.2
C. Labor Charges[e]			
1. Monitoring Labor	0.73	2.2	7.3
2. Leak Repair Labor	1.4	4.4	14
3. Administrative and Support	0.85	2.6	8.5
Total Annualized Cost Before Credit	9.8	18	48
Recovery Credits[f]	(6.5)	(20)	(65)
Net Annualized Cost	3.3	(2)	(17)
VOC Emission Reduction (Mg/yr)[g]	23	72	230
Cost-Effectiveness ($/Mg VOC Emission Reduction)	140	(28)	(74)

(xx) = cost savings

[a]From Tables 5-1 and 5-4.

[b]From Table 5-3.

[c]Basis for cost estimates presented in Table 5-4.

[d]Calculated as: Estimated number of pump seal leaks per year (Table 5-5) x $140.

[e]From Table 5-6.

[f]From Table 5-8.

[g]From Table 4-4.

Table 5-10. EXAMPLES OF COST EFFECTIVENESS BY COMPONENT TYPE FOR MODEL PLANT B UNDER RACT (June 1980 dollars)

Component	Number of components[a]	Capital Costs[b] ($)	Annualized cost before credit[c] ($/yr)	Annual recovery credit[d] ($/yr)	Net annual cost($/yr)	Total VOC reduction[d] (Mg/yr)	Cost effectiveness ($/Mg)
Valves	750	2,700	7,200	11,100	(3,900)	38	(100)
Relief valves	12	0	320[h]	980	(660)	0.97	(680)
Open-ended lines	150	9,200[e]	2,300[i]	4,200	(1,900)	19	(100)
Compressor seals	6	2,000	1,700	3,500	(1,800)	12	(150)
Pump seals	6	810	1,600	310	1,300	1.5	870
PLANT TOTAL[f] (with instrument cost)	924	23,700	18,600	20,100	(1,500)	72	(21)

(xx) = cost savings

[a]From Table 2-2.

[b]Initial leak repair costs are treated as capital costs because they are one-time costs. From Table 5-3.

[c]From Table 5-3, 5-6, and 5-9.

[d]From Table 5-7.

[e]Based on capital cost data for caps presented in Table 5-1.

[f]Monitoring instrument capital and annualized costs are based on purchase of two instruments per gas plant. The total capital cost for the instruments is $9,200, and the total annualized costs for the instruments is approximately $5,500. From Tables 5-1 and 5-4.

Table 5-11. COSTS AND COST-EFFECTIVENESS FOR COMPRESSOR VENT CONTROL SYSTEM FOR MODEL PLANT B

Compressor Type[a]	Control Device Present[b]	Compressor Service	Capital Cost[c] ($1,000)	Annual Cost[d] ($1,000/yr)	Emission Reduction (Mg/yr)	Cost Effectiveness ($/Mg)
Centrifugal	yes	wet gas[e]	4.7	1.2	4.2	280
		NGL[f]			33.0	36
	no	wet gas	12.0	3.0	4.2	710
		NGL			33.0	91
Reciprocating	yes	wet gas	29.0	7.3	4.2	1,700
		NGL			33.0	200
	no	wet gas	36.0	9.1	4.2	2,200
		NGL			33.0	280

[a] Centrifugal compressors are driven by rotating shafts while reciprocating compressors are driven by shafts having a linear motion.

[b] "Yes" indicates that a control device is present at the plant. The cost of a control device (flare) has been added to the compressor vent control system costs for plants without an existing control device.

[c] Costs based on Table 5-1.

[d] Costs annualized as shown in Table 5-4.

[e] Wet gas means field gas with an average VOC content of 10 percent by weight.

[f] Natural gas liquids (NGL) consist of mixed liquids separated from wet gas (i.e., liquid petroleum gas).

5.6 REFERENCES

1. Telephone conversation. Michael Alexander, TRW, with Ms. M. Fecci of Analabs/Foxboro. March 23, 1982. Price of Century Systems OVA-108 in July 1980.

2. Telephone conversation. Michael Alexander, TRW, with Mr. Harris of Dillon Supply, Durham, N.C. June 17, 1981. Price of gate valves.

3. Economic Indicators. Chemical Engineering. Vol. 88 #12. June 15, 1981. p. 7.

4. Letter with attachments from Texas Chemical Council to Walt Barber, U.S. EPA. June 30, 1980.

5. Telephone conversation. Michael Alexander, TRW, with Danny Keith, Dillon Supply Co., Raleigh, N.C. June 15, 1981. Costs of valves, pipes, and fittings.

6. Telephone conversation. Tom Norwood, Pacific Environmental Services, Inc., with P. Marthinetti, Ingersoll Rand. Distance Piece Price, December 8, 1982.

7. McMahon, Leonard A., 1981 Dodge Guide. Annual Edition No. 13, McGraw-Hill Publishing Co.

8. Memorandum. K.C. Hustvedt, EPA, to J.F. Durham, EPA. Cost basis for compressor vent control system. February 23, 1983.

9. Letter with attachments from J.M. Johnson, Exxon Company, U.S.A., to Robert T. Walsh, U.S. EPA. July 28, 1977.

10. Erikson, D.G., and V. Kalcevic. Hydroscience, Inc. Organic Chemicals Manufacturing Industry. Volume III, Report No. 2: Fugitive Emissions EPA 450/3-80-025. September 1980.

11. Environmental Protection Agency. Control of Volatile Organic Compounds Leaks from Petroleum Refinery Equipment. EPA-450/2-78-036, OAQPS No. 1.2-111. June 1978.

12. Economic Indicators. Chemical Engineering, Vol. 86 #2. January 15, 1979.

13. Economic Indicators. Chemical Engineering, Vol. 87 #19. September 22, 1980.

14. Fugitive Emission Sources of Organic Compounds - Additional Information on Emissions, Emission Reductions, and Costs. EPA 450/3-82-010, April 1982.

15. Telephone conversation. T. Hennings, TRW, with Editor, Oilgram News. February 25, 1981. Price of LPG on June 16, 1980.

16. Nelson, W.L. Petroleum Refinery Engineering, McGraw-Hill Book Company, Inc. New York 1958, p. 32.

17. DOE Monthly Energy Review. January 1981. DOE/EIA-0035(81/01). p. 88.

APPENDIX A

EMISSION SOURCE TEST DATA

APPENDIX A
EMISSION SOURCE TEST DATA

The purpose of Appendix A is to summarize the fugitive emission test data that have been collected at six natural gas/gasoline processing plants (see Table A-1) by EPA and industry. Two gas plants were tested under contract to the American Petroleum Institute (API), and four gas plants were tested under contract to EPA. All six gas plants were screened for fugitive emissions using either portable hydrocarbon detection instruments, soap solution, or both. Instrument screening (using EPA's proposed Method 21) was performed at all four of the EPA-tested plants (Plants 3, 4, 5, and 6). The instruments were calibrated with methane. Soap screening (using the method described in Reference 1) was performed at the two API-tested plants and at three of the EPA-tested plants. Selected components were measured for mass emissions at both of the API-tested plants (Plants 1 and 2) and at two of the EPA-tested plants (Plants 5 and 6). These mass emission measurements were used in development of emission factors for gas plant fugitives, which are presented in Table 2-1. A study of maintenance effectiveness at production field tank batteries was also performed by API. These data are discussed in Section A.2.

A.1 PLANT DESCRIPTION AND TEST RESULTS

One API-tested gas plant was of the refrigerated absorption type, and the other was a cryogenic plant. Descriptions and schematics of the plants are provided in Reference 1. Of the four EPA-tested plants, the first tested was a solid bed adsorption type (Reference 2). Natural gas liquids are removed by adsorption onto silica gel, then stripped from the bed with hot regeneration gas and condensed out for sales. There were three adsorption units, of which only one was operating. This unit had a capacity of 60 MMSCFD (million standard cubic feet per day), and

was operating between 33 and 55 MMSCFD during the testing period. The second unit was shut down and depressurized, and therefore not tested. The third unit was also not operating, but it was under natural gas pressure and was tested.

The second EPA-tested plant was of the cryogenic type (Reference 3). Feed gas to the plant is compressed and then chilled. Natural gas liquids are condensed out and split into two streams: ethane/propane and butane-plus. The cryogenic plant was operating at its rated capacity of 30 MMSCFD.

The third EPA-tested plant was of the refrigerated absorption type (Reference 4). There were three absorption systems for removal of natural gas liquids. The liquids were combined and sent to a single fractionation train. The fractionation train separated the liquids into ethane, propane, iso-butane, butane, and debutanized natural gasoline. Testing was performed on the fractionation train and on the largest absorption system. The absorption system that was tested was operating at 450 MMSCFD, near its capacity of 500 MMSCFD.

The fourth EPA-tested plant was also of the refrigerated absorption type (Reference 5). There were two parallel absorption trains, and one fractionation train. Natural gas liquids were fractionated into ethane/propane, propane, iso-butane, butane, and debutanized natural gasoline streams. The plant was operating at approximately 450 MMSCFD, about half of its rated capacity of 800 MMSCFD.

A summary of the instrument screening data collected at the four EPA-tested plants is presented in Table A-2. A summary of the soap screening data collected at the two API-tested plants and at all of the EPA-tested plants is presented in Table A-3. (Only a very small amount of soap screening data were collected at Plant 6). The instrument screening data are tabulated for each plant, showing the number of each type of component tested and the percent emitting. The soap screening data are not tabulated for each plant but are instead summarized by soap score. A complete tabulation of the soap screening data by plant and by soap score is provided in Reference 6.

A.2 INDUSTRY VALVE MAINTENANCE STUDY

The API study that developed the gas plant data presented in Section A.1 also included a study of maintenance. Gate valves in gas and condensate

service in oil and gas production field tank batteries were studied. The sources were monitored with soap scoring at intervals over a 9-month period. The results of an analysis of this data show that monthly leak occurrence was 1.3 percent, monthly leak recurrence was 1.6 percent, and leak repair effectiveness was 100 percent.[7] These results compare favorably with the 1.3 percent monthly leak occurrence and recurrence and 90 percent repair effectiveness used to analyze leak detection and repair control effectiveness. Maintenance was performed on a portion of the valves studied. The industry study results were not specifically used here, however, because (1) the data were gathered in tank batteries which, based on API data, appear to have different leak characteristics, (2) very few valves were studied (25 total data points), and (3) a soap score value of 3 was used to define a leak rather than a meter reading of 10,000 ppm.

Table A-1. GAS PLANTS TESTED FOR FUGITIVE EMISSIONS[a]

Plant No.	Data collection sponsor	Plant process type	Principal screening method(s) used
1	API	Refrigerated Absorption	Soaping
2	API	Cryogenic	Soaping
3	EPA	Adsorption	Instrument, Soaping
4	EPA	Cryogenic	Instrument, Soaping
5	EPA	Refrigerated Absorption	Instrument, Soaping
6	EPA	Refrigerated Absorption	Instrument[b]

[a]Reference 6.

[b]Less than 50 components were soap screened at plant #6.

Table A-2. INSTRUMENT SCREENING FOR EPA-TESTED GAS PLANTS[a]

Plant No.	Valves		Relief valves		Open-ended lines		Compressor seals		Pump seals		Flanges and connections	
	No. Tested	Percent 10,000 ppmv	No. Tested	Percent 10,000 ppmv	No. Tested	Percent 10,000 ppmv	No. Tested	Percent 10,000 ppmv	No. Tested	Percent 10,000 ppmv	No. Tested	Percent 10,000 ppmv
3	331	23.6	10	90.0	45	15.6	0	0.0	1	0.0	223	5.4
4	506	16.8	7	14.3	65	18.5	4	100	9	44.4	281	2.1
5	1,804	12.1	60	5.0	472	11.7	30	46.7	51	33.3	768	3.6
6	1,038	21.5	3	33.3	139	8.6	2	50.0	40	22.5	506	2.0
Total	3,679	16.4	80	17.5	721	11.9	36	52.8	101	29.7	1,778	3.1

[a]Reference 6.

Table A-3. SOAP SCREENING DATA FOR API-TESTED AND EPA TESTED GAS PLANTS[a]

Soap Score	Valves		Relief valves		Open-ended lines		Compressor seals		Pump seals		Flanges and connections	
	Number	% of Total	Number	% of Total	Number	% of Total	Number	% of Total	Number	% of Total	Number	% of Total
0	4,483	75.1	123	91.8	945	79.2	8	28.6	14	77.8	17,982	92.7
1	322	5.4	4	3.0	63	5.3	1	3.6	0	0.0	706	3.6
2	468	7.8	2	1.5	83	7.0	2	7.1	1	5.6	454	2.3
3	426	7.1	2	1.5	59	4.9	7	25.0	0	0.0	190	1.0
4	274	4.6	3	2.2	43	3.6	10	35.7	3	16.7	65	0.3
Total	5,973		134		1,193		28		18		19,397	

[a]Includes data from two API-tested plants and four EPA-tested plants. Reference 6.

A.3 REFERENCES FOR APPENDIX A

1. Eaton, W. S., et al. Rockwell Corporation. Fugitive Hydrocarbon Emissions from Petroleum Production Operations. API Publication No. 4322. March 1980.

2. Harris, G. E., Radian Corporation. Fugitive VOC Testing at Houston Oil and Minerals Smith Point Plant. U.S. EPA, ESED/EMB Report No. 80-OSP-1. October 1981.

3. Harris, G. E., Radian Corporation. Fugitive VOC Testing at the Amoco Hastings Gas Plant. U.S. EPA, ESED/EMB Report No. 80-OSP-2. July 1981.

4. Harris, G. E., Radian Corporation. Fugitive VOC Testing at the Texaco Paradis Gas Plant, Volume I and II. U.S. EPA, ESED/EMB Report No. 81-OSP-7. July 1981.

5. Harris, G. E., Radian Corporation. Fugitive Test Report at the Gulf Venice Gas Plant, Volume I and II. U.S. EPA, ESED/EMB Report No. 80-OSP-8. September 1981.

6. DuBose, D. A., J. I. Steinmetz, and G. E. Harris, Radian Corporation. Data Analysis Report: Emission Factors and Leak Frequencies for Fittings in Gas Plant. Final Report. U.S. EPA, ESED/EMB Report No. 80-FOL-1. July 1982.

7. Memorandum, Hustvedt, K.C., EPA to Durham, J.F., EPA "API/Rockwell Maintenance Data". December 9, 1982.

APPENDIX B

MODEL PLANTS

APPENDIX B
MODEL PLANTS

The purpose of this appendix is to present model plants. The model plants were selected to represent the range of processing complexity in the industry. They provide a basis for determining environmental and cost impacts of reasonably available control technology (RACT).

B.1 DEVELOPMENT OF MODEL PLANTS

There are a number of different process methods used at gas plants: absorption, refrigerated absorption, refrigeration, compression, adsorption, cryogenic - Joule-Thompson, and cryogenic-expander.[1] Process conditions are expected to vary widely between plants using these different methods. However, available data show that fugitive emissions are proportional to the number of potential sources, and are not related to capacity, throughput, age, temperature, or pressure.[2] Therefore, model plants defined for this analysis represent different levels of process complexity (number of fugitive emission sources), rather than different process methods.

In order to estimate emissions, control costs, and environmental impacts on a plant specific basis, three model plants were developed. The number of components for each model plant is derived from actual component inventories performed at four gas plants. Two of the plants were inventoried during EPA testing, and two were inventoried during testing by Rockwell International under contract to the American Petroleum Institute. The model plants are based on four rather than on all six of the plants presented in Appendix A because two of the plant visits did not obtain information on vessel or equipment inventories. Nevertheless, the four plants for which vessel and equipment inventory data were obtained are representative of the range of plant complexity found in the natural gas processing industry.

Complexity of gas plants can be indexed by means of calculating ratios of component populations to a more easily counted population. For gas plants, number of vessels appears to be best suited to this need. Example types of equipment included and excluded in vessel inventories are listed in Table B-1. The vessel inventories for the industry-tested gas plants are taken from the site diagrams and descriptions provided in the API/Rockwell report,[5] and the vessel inventories from the EPA-tested plants were performed during the testing. These vessel inventories and the component inventories are shown in Table B-2. Table B-3 shows the ratios of numbers of components to numbers of vessels at the four gas plants. The mean and standard deviation of the four ratios is also shown in Table B-3.

Three model plants have been developed using the average ratios of components to vessels. The number of vessels in the model gas plants are 10, 30, and 100. This range in number of vessels is based on the vessel inventories shown in Table B-2. The low end of the range, 10 vessels, is approximately equivalent to the number of vessels that are accounted for in one of the three process trains at the EPA-tested plant A. It is assumed that there are existing gas plants with a similar configuration to the EPA-tested plant A, that have only one process train. The high end of the range, 100 vessels, is slightly larger than the number of vessels at the industry-tested plant A. Since this was the largest of the plants tested, it appears reasonable to use this as a guide in calculating the number of components at the largest model plant. The middle model plant has 30 vessels. This is approximately the same number of vessels as at three of the four plants tested, and appears that it may be representative of a common gas plant size. The three model plants and their respective number of components are shown in Table B-4.

Table B-1. EXAMPLE TYPES OF EQUIPMENT INCLUDED AND EXCLUDED IN VESSEL INVENTORIES FOR MODEL PLANT DEVELOPMENT

Included

1. Absorption/Desorption Units
   a. Absorbers
   b. Scrubbers
   c. Dehydrators
   d. Stabilizer
   e. Stripper
2. Adsorption Units
3. Distillation/Fractionation Units
   a. Demethanizer
   b. Deethanizer
   c. Depropanizer
   d. Splitter
   e. Flash Drum/Tank
   f. Stills
4. Heating/Cooling Units
   a. Heaters
   b. Chillers
   c. Heat Exchangers
   d. Reboilers
   e. Condensers
   f. Coolers
5. Drums/Tanks
   a. Separator
   b. Surge
   c. Gas
   d. Oil
   e. Accumulator
   f. Knockout

Excluded

1. Compressors, Pumps
2. Piping Systems
   a. Manifold/header systems
   b. Valves, flanges, connections, etc.
   c. Meters, gauges, control equipment
3. Glycol, lube oil, water storage
4. Any equipment associated with sweetening or sulfur recovery processes

Table B-2. NUMBER OF COMPONENTS IN HYDROCARBON SERVICE AND NUMBER OF VESSELS AT FOUR GAS PLANTS

	EPA Tested Plants[a]		Industry Tested Plants[b]	
	A	B	A	B
Vessels	31	30	90	25
Valves	508[c]	541	3,330	762
Relief Valves	16[c]	11	20	7
Open-Ended Lines	62[c]	64	669	173
Compressor Seals	0	8	35	0
Pump Seals	1[c]	12	32	3
Flanges and Connections	1,530[c]	1,440	15,370	3,030

[a]Reference 3.

[b]Reference 4.

[c]Only two of the three adsorption units at the plant were tested and inventoried. Estimated total number of components is therefore based on the sum of the number of components counted in the larger unit plus twice the number of components counted in the smaller unit.

Table B-3. RATIOS OF NUMBERS OF COMPONENTS TO NUMBERS OF VESSELS[a]

	EPA Tested Plants		Industry Tested Plants		Average Ratio	Standard Deviation of Ratio
	A	B	A	B		
Valves	16.4	18.0	37.0	30.5	25.5	9.9
Relief Valves	0.5	0.4	0.2	0.3	0.4	0.1
Open-Ended Lines	2.0	2.1	7.4	6.9	4.6	3.0
Compressor Seals	0.0	0.3	0.4	0.0	0.2	0.2
Pump Seals	0.0	0.4	0.4	0.1	0.2	0.2
Flanges and Connections	49.4	48.0	170.8	121.2	97.4	59.7

[a]Based on data presented in Table B-2.

Table B-4. FUGITIVE VOC EMISSION SOURCES FOR THREE MODEL GAS PROCESSING PLANTS

Component type[a]	Number of components		
	Model plant A (10 vessels)	Model plant B (30 vessels)	Model plant C (100 vessels)
Valves	250	750	2,500
Relief Valves	4	12	40
Open-Ended Lines	50	150	500
Compressor Seals	2	6	20
Pump Seals	2	6	20
Flanges and Connections	1,000	3,000	10,000

[a]Number of Components based on average ratios presented in Table B-3.

B.2 REFERENCES

1. Cantrell, A. Worldwide Gas Processing. Oil and Gas Journal, July 14, 1980. p. 88.

2. Assessment of Atmospheric Emissions from Petroleum Refining, Volume 3, Appendix B. EPA 600/2-80-075c, April 1980. Pages 266 and 280.

3. Hustvedt, K.C., memo to James F. Durham, Chief, Petroleum Section, OAQPS, U.S. EPA. Preliminary Test Data Summaries of EPA Testing at Houston Oil and Minerals Smith Point Gas Plant and Amoco Production Hastings Gas Plant. March 19, 1981.

4. Eaton, W.S., Rockwell International, letter to D. Markwordt, OAQPS, U.S. EPA. Component Inventory Data from Two API-Tested Gas Plants. September 11, 1980.

5. Eaton, W.S., et al. Fugitive Hydrocarbon Emissions from Petroleum Production Operations. API Publication No. 4322. March 1980.

APPENDIX C

PUBLIC COMMENTS

This appendix presents the public comments received by the EPA on the draft CTG. Table C-1 summarizes the respondents and lists their corresponding number used to identify commenters in the Summary of Public Comments and Responses presented in Appendix D.

Table C-1. LIST OF COMMENTERS ON THE DRAFT CTG FOR NATURAL GAS/GASOLINE PROCESSING PLANTS

Comment Number	Company	Commenter	Date of Comment
1	ARCO Oil & Gas Company	L.E. Bartlett	March 9, 1982
2	Cities Service Company	D.V. Trew	March 9, 1982
3	Columbia Gas System Service Corporation	M.J. Atherton	March 9, 1982
4	Southern California Gas Company	G.M. Gardetta	March 9, 1982
5	Michigan Consolidated Gas Company	S.E. Kurmas	March 10, 1982
6	Texas Oil & Gas Company	J.W. Boley	March 10, 1982
7	Texas Air Control Board	R.R. Wallis	March 10, 1982
8	American Petroleum Institute	C.T. Sawyer	March 11, 1982
9	Michigan Wisconsin Pipe Line Company	J.V. Mehta	March 11, 1982
10	Chevron	R.W. Kreutzen	March 12, 1982
11	Amoco Production Company	R.E. Mahaffey	March 18, 1982
12	Flour Engineers and Constructors, Inc.	S.J. Thomson	March 22, 1982

ARCO Oil and Gas Company
Engineering Department
Post Office Box 2819
Dallas, Texas 75221
Telephone 214 551 5151

Luther E. Bartlett
Manager
Operations and Engineering Services

March 9, 1982

Mr. Fred Porter
Emission Standards and Engineering Division (MD-13)
U. S. Environmental Protection Agency
Research Triangle Park, North Carolina 27711

Re: Draft Control Techniques Guideline (CTG) for Control of Volatile Organic Compound (VOC) Equipment Leaks from Natural Gas/Gasoline Processing Plants

Dear Mr. Porter:

ARCO Oil and Gas Company, a Division of Atlantic Richfield Company, appreciates the opportunity to offer comments to the U. S. Environmental Protection Agency (EPA) regarding the Federal Register Notice (47 FR 3403, January 25, 1982) releasing the draft control techniques guideline (CTG) document for control of volatile organic compound (VOC) emissions from equipment leaks in natural gas/gasoline processing plants.. ARCO Oil and Gas Company has for many years been actively involved in the production of natural gas and gasoline. We are particularly interested in the subject CTG which will directly affect our Company.

A task force was formed by American Petroleum Institute (API) to consider the VOC emissions from natural gas/gasoline processing plants. ARCO Oil and Gas Company representatives participated in the preparation of comments with respect to the subject CTG on VOC emissions submitted on behalf of API, and we are in full agreement with the concerns addressed therein.

While we are in full agreement with API's concerns, we would like to emphasize API's comments regarding "Chapter 5, Control Cost Analysis." Implementation of reasonably available control technology (RACT) will have a significant economic impact on our operations. Several incorrect assumptions appear to have been made when developing the economic analysis for the CTG document to be used in evaluating the RACT for VOC equipment leaks in gas plants. As a result the economic

analysis supporting this guideline suggests control of the fugitive VOC emissions will have a direct economic benefit to the operations of ARCO Oil and Gas Company, thus justifying the proposed RACT. We do not agree with many of the assumptions and, therefore, do not feel the RACT has been justified. For example, the CTG economic analysis equates "front-end costs" with "capital costs" (comment 13). Capital cost has a specific economic definition and does not include operating costs. In addition, the cost analysis for the labor associated with leak detection severely underestimates the actual cost (comment 18). A complete cost estimate must include the front-end set-up costs, depreciation on the equipment, additional - and otherwise unnecessary - platforms for each inaccessible source, and maintenance on the VOC analyzer. Although the conclusion of the draft CTG's economic analysis is that the oil and gas industry has lost significant revenue from not controlling fugitive VOC emissions (excepting the smallest plants), we feel the costs of implementing and maintaining the recommended practices are much greater than estimated with little if any improvement in the air quality. Consequently, we believe a net long-term loss will result from the use of the proposed RACT. This is of specific concern since the draft CTG, although published as only a guidance to the states, will serve as the basis for many of the state regulations.

We appreciate your consideration of our concern. If it would be helpful, we would welcome an opportunity to further discuss our concerns associated with implementing the proposed RACT to control VOC emissions from natural gas/gasoline processing plants.

Sincerely,

Luther E. Bartlett

Luther E. Bartlett

CITIES SERVICE COMPANY
BOX 300
TULSA, OKLAHOMA 74102

March 9, 1982

Emission Standards & Engineering
Division (MD-13)
Environmental Protection Agency
Research Triangle Park, NC 27711

Attention Mr. Fred Porter

Dear Mr. Porter:

Cities Service Company is the owner and operator of numerous gas processing plants and as such is concerned with the proposed control technique guideline (CTC) "Control of Volatile Organic Compound Equipment Leaks from Natural Gas/Gasoline Processing Plants." Notice of the release of this document for review was made in the Federal Register, Vol. 47, No. 16, January 25, 1982.

On page 3-3 of the report, 3.1.2.2 Compressors, it is stated that the control of VOC leaks from compressor seal areas can be controlled by enclosing the compressor seal area or distance piece, and piping the emissions to a suitable combustion device. This control device could exert considerable back pressure on the compressor seal. Many of the compressor seals in our gas processing plants are not designed to operate with back pressure and the use of the control device recommended can cause severe mechanical problems and potentially a safety problem. We have no knowledge of any workable control device and we recommend that the use of this type of a control device for gas plant compressors not be considered.

The estimated reductions in emissions achievable are based on data from six processing plants. This is a very limited data base considering that there are approximately 800 plants in operation. The technology of each plant is dependent upon the age of the plant, type of process, market conditions, and the nature of the gas processed. The extrapolation of the limited data based on "Number of Vessels" is not statistically valid.

Cities Service Company appreciates the opportunity to make these comments and trusts that they will be considered by the agency in order to make the final control technique guideline a more meaningful and workable document.

Sincerely,

C-5

D. V. Trew
Manager, Environmental Services

DVT:em

COLUMBIA GAS SYSTEM SERVICE CORPORATION

20 MONTCHANIN ROAD
WILMINGTON, DELAWARE 19807

March 9, 1982

Emissions Standards and Engineering Division (MD-13)
Environmental Protection Agency
Research Triangle Park, North Carolina 27711

Dear Sirs:

Re: Control Techniques Guideline Document; Equipment Leaks From Natural Gas/Gasoline Processing Plants

Columbia Gas System Service Corporation on behalf of Columbia Gas System (Columbia) herewith submits comments on the above draft control techniques guideline (CTG), the release of which was announced in the Federal Register of January 25, 1982.

Columbia is one of the largest natural gas systems in the United States and is composed of The Columbia Gas System, Inc., a registered public utility holdling company, a service company and eighteen operating subsidiaries. The operating subsidiaries are primarily engaged in the production, purchase, storage, transmission and distribution of natural gas at wholesale and retail. Columbia supplies directly through its retail operations, or indirectly, through other utilities, the gas requirements of about 4,200,000 customers in an area having a population of approximately 18,000,000. Columbia's service area includes large parts of the states of Ohio, Pennsylvania, Kentucky, New York, Virginia, West Virginia, Maryland and the District of Columbia. Columbia serves at retail 1,890,000 customers residing in communities with a total population of 7,400,000.

As an owner of natural gas processing plants, Columbia has a direct interest in this CTG. Therefore, Columbia is submitting the following comments.

Model Plant A Considerations

While the stated purpose of the CTG is to provide information to state and local air pollution agencies, it will actually be used by these agencies to develop and adopt new regulatory programs for compliance with Sections 172(a)(2) and (b)(3) of the Clean Air Act. Thus, Columbia believes the requirements of Presidential Executive Order 12291 of February 17, 1981 (45 FR 13193; February 19, 1981) must be considered in the development of RACT for natural gas/gasoline plants. Section 2 of this Presidential Executive Order requires that potential benefits must outweigh costs and be maximized. In this respect, EPA makes no recommendations in the CTG concerning the limits of applicability of RACT (Reasonably Available Control Technology) to natural gas/gasoline processing plants.

However, the CTG states that plants of the size of the model plant A will incur a net annual cost for RACT of $2300, with a cost effectiveness of $115/Mg. For these plants requiring conversion of pneumatic control valves from gas to air, the costs will be higher (Section 5.1.5). The larger plants, model plants B and C, will receive a net savings ($4,200 and $24,500, respectively) and have a cost effectiveness of -$70/Mg and -$120/Mg, respectively (Sections 5.3.2 and 5.3.3). Given the low annual emissions of volatile organic compounds (VOC), 29 Mg (Table 2-2), of the model plant A, the annual costs and cost effectiveness for these plants dictate that these plants should not be subject to the requirements of RACT.

Secondly, an annual emission rate of 29 Mg is equivalent to about 32 tons/year VOC. This level of emissions is less than that which EPA has defined as "significant" or as a de minimis value in several regulations (for example, 40 CFR Part 51, Appendix 5, II.A.10; 40 CFR 52.24(f)(13); and 45 FR 52705-52710, August 7, 1980). The "significant" or de minimis value applicable to ozone is 40 tons per year of volatile organic compounds.

Finally, the smaller plants will have fewer employees than larger plants. Thus, it may be anticipated the proposed RACT measures will more severely strain their limited staff.

Based upon the above three considerations of costs and benefits, emissions below "significant" or de minimis levels and potential manpower limitations, Columbia recommends that, in the

CTG, plants of the size of model plant A (10 vessels as defined in Appendix B) or smaller be excluded from the requirements of RACT. This exclusion, similar to the following, should be added as the last paragraph of Section 1.0 Introduction:

> Natural gas/gasoline processing plants equal to and less than the size of a model plant A (10 vessels as defined in Appendix) should be excluded from the requirements for RACT. This recommendation is based upon an analysis of costs and the low level of emissions of volatile organic compounds from such plants.

Further, the CTG should point out in Section 2.3 that VOC emissions from the model plant A are less than those considered as "significant" or de minimis. Thus, the imposition of RACT, with its attendant costs (Section 5.0), is not needed.

Monitoring Instrumentation

One of the major costs for implementing RACT is that for the purchase and maintenance of monitoring equipment. Natural gas facilities already have portable monitoring instruments for detection of leaks of combustible hydrocarbons as part of their safety programs. Further, this type of instrument is considerably less expensive than the monitoring instruments described in the CTG. Leak detection of combustible hydrocarbons with these instruments and knowledge of the processes before and after various components could provide an estimate of VOC emissions. Use of this instrument and approach would provide the operator with a method to estimate VOC emissions, to determine those components requiring repair and to measure the effectiveness of repair, but at much less cost than the recommended type of monitoring instruments.

Columbia recommends that EPA include this type of instrument as an alternative to the purchase of expensive, new instrumentation for leak detection and implementing RACT.

Columbia appreciates the opportunity to comment on the CTG and trusts the above comments will be evaluated and of value to EPA.

Sincerely,

Michael J. Atherton

Michael J. Atherton, Ph.D.
C-8 Environmental Affairs

MJA/ljh

SOUTHERN CALIFORNIA gas COMPANY

G M GARDETTA
Environmental Affairs
Administrator

810 SOUTH FLOWER STREET • LOS ANGELES, CALIFORNIA 90017

Mailing Address BOX 3249 TERMINAL ANNEX, LOS ANGELES, CALIFORNIA 90051

March 9, 1982

Mr. Fred Porter
Emission Standards and Engineering Division (MD-13)
Research Triangle Park
North Carolina 27711

Dear Mr. Porter:

Southern California Gas Company (SoCal) appreciates the opportunity to submit the following comments on the Environmental Protection Agency's (EPA) draft control techniques guideline (CTG) document entitled "Control of Volatile Organic Compound Equipment Leaks from Natural Gas/Gasoline Processing Plants", for review and consideration.

SoCal is the nation's largest natural gas distribution company. Accordingly, it has a serious concern regarding the applicability of the proposed CTG to underground gas storage facilities. It is not clear from the language of the proposed document whether or not the definition of a natural gas/gasoline storage operation excludes underground gas storage fields.

SoCal strongly feels that a gas storage operation should not be compared with conventional oil/gas production facilities and gas processing plants. It is important to recognize that among other factors, the magnitude of fugitive emissions will be dependent on the complexity and number of component processes. The liquid and gas processes performed at an underground gas storage facility are relatively few and simple when compared to those at a conventional gas processing plant and oil/gas production operations.

In order to demonstrate the basis for its concern, SoCal has provided the following summary of the facilities which could be impacted and has compared these to traditional gas processing plants and oil/gas production operations. SoCal operates six underground storage fields located in Honor Rancho, Aliso Canyon, Playa del Rey, Montebello, East Whittier and Goleta. The gas withdrawal capacity ranges from 1.5 billion cubic feet per day to 72 million cubic feet per day. The larger gas storage fields operate to meet peak winter load demand while smaller fields are

usually used to meet daily peak load demands. Therefore, operations at SoCal's larger storage fields are seasonal compared to conventional oil/gas production fields where production is usually continuous throughout the year.

SoCal's gas storage fields are depleted oil or dry gas fields, and any oil production is obtained primarily due to repressurization of the field to store gas. Coincident oil production from these underground gas storage fields is not significant. The gas to oil ratios in SoCal's operations range from 90,000 to 766,000 cubic feet per barrel of oil produced. This is significantly higher than the reported gas to oil ratio of 1,000 cubic feet per barrel of oil produced from conventional oil/gas production operations. A high gas to oil ratio clearly implies a smaller scale of oil treatment operations and consequently results in significantly lower fugitive emissions.

Figure 1 (attached) represents a simplified flow sheet of the gas withdrawal process in a typical underground gas storage field. In general, gas injection, withdrawal and dehydration operations are similar at all SoCal's storage fields with the exception of Playa del Rey where there is no dehydration. Oil treatment (stabilization) and oil/condensate storage are other operations where additional HC gas is generated and the methods of processing or handling this gas varies from field to field. At Montebello and Playa del Rey, this gas is directly delivered into the low pressure distribution or transmission pipeline system. At Honor Rancho, it is delivered to an oil company gasoline plant for further processing. At Aliso Canyon, the gases are compressed and then the liquid fractions (gasoline) are removed in a Hydrocarbon Recovery Unit (HRU). It is important to note that the volume of HC gases generated at oil treatment and storage operations represent only a small fraction of the total natural gas processed.

To study the composition of the aforementioned gas streams, one should refer to Table 4 (attached). The compositions of non-methane and non-methane plus non-ethane were obtained from actual field test data. The table also compares SoCal's data with the average gas analysis reported in the emission factor table of the API/Rockwell report - "Fugitive Hydrocarbon Emissions from Petroleum Production Operations", March 1980. The non-methane and non-methane plus non-ethane hydrocarbons present in SoCal's wet gas range from 5.26 to 8.47 percent by volume and 1.54 to 2.21 percent by volume respectively. Conversely, an average composition of similar wet gas reported in the API study contains 22.93 percent by volume non-methane hydrocarbon and 18.4 percent by volume non-methane plus non-ethane HC. This difference clearly indicates that fugitive emissions of reactive hydrocarbons from an underground gas storage operation are significantly lower than a conventional oil/gas production facility. The low concentration of non-methane or non-methane plus non-ethane hydrocarbons in SoCal's wet gas is not mere coincidence.

In a conventional oil/gas production operation the gas withdrawn is unprocessed and contains significant amounts of higher fractions of the HC species containing ethane, propane, butane and natural gasoline. However, in SoCal's operations the gas injected is commercial natural gas which only contains small amounts of higher hydrocarbons and consequently very little of the higher hydrocarbon fractions are picked up when this gas is withdrawn.

Conventional gas processing plant operations on the other hand, involve removal of methane, ethane, propane and butane from the balance of the species present in an unprocessed natural gas. The remaining liquid is piped to refineries or chemical processing plant.

Two types of gas plants are primarily utilized in the field today -- absorption and cryogenic plants. The absorption plant is based upon the physical principle that natural gasoline is readily absorbed into low molecular weight oils called lean oil before absorption and fat or rich oil after absorption. When the temperature of the rich oil is raised and the pressure is reduced, the absorbed light hydrocarbons are driven out of the oil selectively. Cryogenic gas plants operate on the basis that natural gasolines will liquify when the temperature is lowered and the pressure increased. Chilling is usually accomplished by use of propane refrigeration. The hydrocarbon species are selectively distilled from the cold natural gasolines.

None of the processes described above fit SoCal's underground gas storage operations. Only at Aliso Canyon does SoCal remove higher hydrocarbon fractions in a HRU. The Hydrocarbon Recovery Unit utilizes a simple process of compression which causes liquifiable species to condense under pressure. Furthermore, at Aliso Canyon no attempt is made to separate the liquid hydrocarbon fractions as is usually done in a gas processing plant.

Thus, because of the significantly fewer processing steps used in SoCal's facilities, one can only conclude that a valve count and consequently, fugitive emissions from a conventional gas processing plant will be significantly higher than SoCal's underground gas storage fields.

CONCLUSIONS AND RECOMMENDATIONS

Fugitive emissions from underground storage fields operations are predominantly natural gas which contains very little reactive hydrocarbon and the magnitude of such emissions should be significantly lower than a conventional oil/gas production operation or a gas processing plant. Therefore, SoCal strongly recommends that the definition of natural gas/gasoline processing plant should be redefined to exclude underground gas storage facilities.

Sincerely,

G. M. Gardetta

GMG:avs
Attachments

OF AN UNDERGROUND GAS STORAGE FACILITY

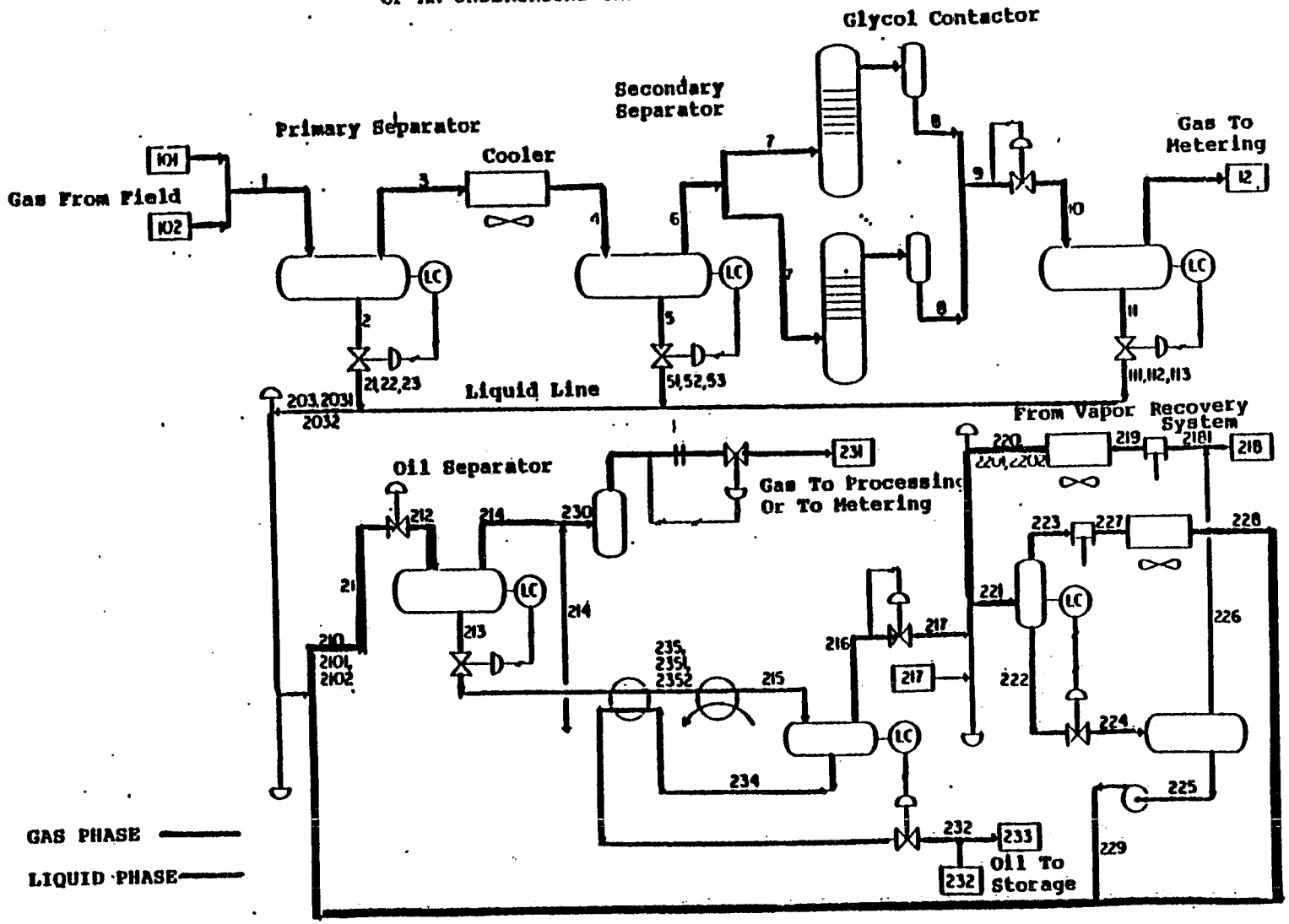

FIGURE 1

Table 4

GAS ANALYSIS DATA

(All Data Reported in Volume Percent)

Location	Wet Gas From Field			Gas After Dehydration			Gas From Gathering Station		
	%CH_4	%NMHC	%NM&NEHC	%CH_4	%NMHC	%NM&NEHC	%CH_4	%NMHC	%NM&NEHC
Honor Rancho	90.17	8.0	1.55	88.27	9.95	3.25	a) 81.72	16.17	6.48
Aliso Canyon	89.31	8.47	2.21	89.12	8.78	2.30	b) 90.15	8.24	3.32
							c) 89.10	8.82	2.19
							d) 89.13	8.82	2.27
East Whittier	92.35	5.26	1.37	92.37	5.26	1.38	No Oil Production		
Playa Del Rey	90.94	6.94	1.68	90.57	7.11	1.81	e) 80.72	15.19	8.39
Montebello	92.37	5.52	1.54	92.03	5.92	1.53	f) 90.53	7.27	2.62
API/Rockwell Study	77.10	22.9	18.4 g)						

NOTES:
a) This gas is sent to Texaco for processing
b) Gas from LP gathering system before HRU
c) Gas from HP gathering system before HRU
d) Gas from LP gas to line after HRU
e) Gas sampled at Meter #664
f) Gas sampled at Meter #2649 - Tank Farms
g) Gas incoming from field prior to any fractionation. Table E-6 Group 3

NMHC - Non Methane Hydrocarbon
NM&NEHC - Non Methane and Non Ethane HC

MICHIGAN CONSOLIDATED GAS COMPANY
ONE WOODWARD AVENUE DETROIT MICHIGAN 48226

March 10, 1982

Emissions Standards and Engineering Division
Environmental Protection Agency
Research Triangle Park,
North Carolina 27711

Attention: Mr. Fred Porter

Dear Sir:

Michigan Consolidated Gas Company is a natural gas utility currently servicing in excess of one million residential, industrial and commercial customers. Although Michigan Consolidated does not operate any gas processing plants, as defined by your department, the operation of such plants does have an indirect impact on the cost of natural gas to our customers. Therefore, Michigan Consolidated believes that the Draft Guideline Series for the Control of Volatile Organic Compounds Equipment Leaks from Natural Gas/Gasoline Processing Plants imposes excessive financial burden without realizing significant air quality gains.

Michigan Consolidated disputes the premise made in the guidelines that Volatile Organic Compound (VOC) leaks are not being adequately detected by industry (Section 3.1.1.). For economic reasons and, more importantly, safety reasons extensive precautions are taken to detect and repair all but the most insignificant sources. Although visual, audible, and olfactory methods are the primary safeguards, it is not uncommon to supplement these methods with oxygen and hydrogen sulfide monitors. Since many of the major sources (pumps, compressors, etc.) as identified in the guidelines are frequently located inside buildings where emissions are confined, early leak detection becomes even more important. Therefore, Michigan Consolidated believes that fugitive VOC emissions from natural gas processing plants are adequately controlled and further regulation would prove overburdensome.

Michigan Consolidated also disagrees with the methods used in estimating current emissions from processing plants. Fugitive sources vary significantly depending on a variety of conditions. These include: system pressure, equipment age, climate, past maintenance, gas composition (as it affects corrosivity) and a multitude of other factors. To assume that these emissions are simply a function of the number of valves, pumps and flanges at a facility is a gross oversimplification.

Although, the guidlines mention the fact that repairing most fugitive sources will require venting the gas to the atmosphere, they do not include this as a source in either their emission estimates or in the computation of recovery cost credits. Since repairing many insignificant leaks will require blow down of potentially large portions of the system, significant emission reduction benefits and recovery cost credits are questionable.

Our natural gas is your most economical form of energy . . . please help conserve it.

In conclusion, Michigan Consolidated believes that regulations resulting from the implementation of these draft guidelines will be economically burdensome to our natural gas customers while resulting in insignificant improvements to air quality. Therefore, we request that the cost/benefit aspect of these regulations be carefully reconsidered, and that the deadline for comments be extended allowing industry additional time to further analyze these complex regulations.

Sincerely,

Steven E. Kurmas
Senior Environmental Engineer
SEK/sl

TEXAS OIL & GAS CORP.
FIDELITY UNION TOWER
DALLAS, TEXAS 75201

JACK W. BOLEY
MANAGER
SAFETY & ENVIRONMENTAL AFFAIRS

March 10, 1982

Emission Standards and Engineering Division (MD-13)
Environmental Protection Agency
Research Triangle Park, North Carolina 27711
Attn: Mr. Fred Porter

RE: Control of Volatile Organic Compound Equipment Leaks from Natural Gas/Gasoline Processing Plants

Dear Mr. Porter:

Texas Oil & Gas Corp. is an independent energy company that operates 18 natural gas processing plants and is processing approximately 811 million cubic feet per day (MMCFD) of natural gas is responding to the referenced document. The processing is accomplished in various types of plants, such as, turbo-expander cryogenic, refrigerated lean oil, and propane refrigeration. We believe we are quite experienced in the processing of natural gas. It is the opinion of Texas Oil & Gas Corp. that prudent operations eliminate any fugitive emissions associated with the plant processing of natural gas.

The information presented in the document indicate various emission factors for various segments of a natural gas processing plant. It is apparent that much of the information was obtained from a Draft Final report by Radian Corp; September 1981. Since this report is not available to Texas Oil & Gas Corp. there is no way to dispute or support the data based on the reference.

In 1979, the Environmental Protection Agency (EPA) published "Guidence for Lowest Achievable Emission Rate from 18 Major Stationary Sources of Particulates, Nitrogen Oxides, Sulfur Dioxide, or Volatile Organic Compounds," EPA-450/3-79-024. No where in that report were natural gas/gasoline plants mentioned as a major source. Texas Oil & Gas Corp. believes the regulation of fugitive emissions from natural gas plants will not provide a significant benefit to the environment.

Texas Oil & Gas Corp. believes that there are a number of flaws in the document. The flaws as perceived by Texas Oil & Gas Corp. will be discussed section by section.

Section 2.2.4 Pressure Relief Devices

This section discusses the possible emissions from relief valve seals. No where in this section, or in is document is the consideration of a closed system discussed. In many instances pressure relief valves are vented to a plant flare where any volatile organic compounds (VOC) are combusted and thus no VOC would be detected around these devices. From operational standpoint seals or more properly pressure relief valve seats connot be allowed to leak.

Section 2.2.7 Gas Operated Control Valves

The instrument gas used for process control is predominately methane and ethane. Neither methane nor ethane are included in the definition of volatile organic compounds, consequently there is no environmental impact. Only trace amounts of any VOC may be encountered.

Section 2.3 BASELINE FUGITIVE VOC EMISSIONS

This section makes an assumption that all natural gas plants will experience the same type of VOC emissions. The document fails to differ between the type of plant, i.e. cryogenic, lean-oil, or refrigeration, size of plant (for both gas and liquids), and the gas composition, i.e. the amount of light hydrocarbons, will have a significant impact on fugitive emissions. Another factor that was not discussed was the total mix of fluids at the plant. Various hydrocarbons, amines, glycols, slop and lube oils, and condensates can be encountered at any or all natural gas plants. Plants that handle the fractionated hydrcarbons by tank or pipeline will also have significally different fugitive emissions.

Section 3.1.1 Individual Component Survey

The monitoring for this study was accomplished using of a portable hydrocarbon analyzer. The data obtained using the portable hydrocarbon analyzer was used to develop the emissions factors. These emission factors are rates measured in kg/Day. Texas Oil & Gas Corp. questions how the EPA went from a concentration, the measurement from the portable hydrocarbon analyzer, to the emission factor without measuring an actual flow rate. In order to accept the emission factors as stated, the method for obtaining the emission rates must be described in more detail.

Section 3.1.2.2 Compressors

The venting of fugitive emissions by enclosing the compressor seals is not cost effective and is also an operational hazard. At the present time these emissions are allowed to disipate in the atmosphere, by enclosing and venting these emissions, the VOC air mixture would reach explosive limits, thus creating a serious explosion potential. Texas Oil & Gas Corp. questions the ability of a system, as described in this section, to achieve a 15 to 20 psig pressure. It seems apparent that a sufficient exit rate would be required to obtain this pressure. These operations may reach an operational equilibruim where the vent system will never reach the 15 to 20 psig release pressure, thus trapping the VOC in the vent system.

This section mentions a "combustion device" to handle these emissions. At these low pressures, 15 to 20 psig, a flare is not safe for similar reasons as mentioned above. We are unaware of any type of combustion equipment that would facilitate the removal of these VOC from the atmosphere. Texas Oil & Gas suggests that the EPA throughly reevaluate this type of control system.

Secton 3.1.3.3 Allowable Interval Before Repair

The previous Section 3.1.3.2 Inspection Interval indicates a quarterly inspection interval. If there were a number of components in excess of the 10,000 ppmv level, the 15 day repair internal may not be met. Also, if there are sufficient fugitive emissions, the only way the 15-day repair internal could be met is by shutting down the plant. The natural gas industry does not believe the economic implications of plant shutdowns have been anticipated by the EPA, Texas Oil & Gas Corp. suggests that the 15-day repair interval be eliminated in favor of, repairing leaking components during the next regular maintainence period.

Texas Oil & Gas Corp. strongly believes that the regulation of fugitive VOC emissions from natural gas/gasoline plants will not have a significant positive environmental impact. We suggest that the data based to evaluate these fugitive emissions be expanded to insure a representative cross section of plants, not six plants in the entire United States, is used to obtain a more accurate emission profile. The EPA must consider the economic impacts in light of the current economic picture of the United States. The increased regulation of the already overregulated Oil and Gas industry will not enhace the future economic stature of the country.

Very truly yours,

Jack W. Boley
Manager,
Safety & Environmental Affairs

JWB/mkc

TEXAS AIR CONTROL BOARD

6330 HWY. 290 EAST
AUSTIN, TEXAS 78723
512/451-5711

JOHN L. BLAIR
Chairman
CHARLES R. JAYNES
Vice Chairman

BILL STEWART, P. E.
Executive Director

WILLIAM N. ALLAN
VITTORIO K. ARGENTO, P. E.
FRED HARTMAN
D. JACK KILIAN, M. D.
OTTO R. KUNZE, Ph. D., P. E.
FRANK H. LEWIS
WILLIAM D. PARISH

March 10, 1982

Mr. Fred Porter
Environmental Protection Agency
Emission Standards and Engineering
Division (MD-13)
Research Triangle Park, North Carolina 27711

Dear Mr. Porter:

We offer the following comments on the January 25, 1982 Federal Register notice concerning a draft control techniques guideline (CTG) for control of volatile organic compound emissions from equipment leaks from natural gas/gasoline processing plants.

From this notice, it is our understanding that the Environmental Protection Agency now plans to use CTG documents to provide technical and cost comparative data to state and local air pollution control agencies to assist in analysis of reasonably available control technology (RACT) for various industrial processes. We understand that the CTG's are not to be regulatory and will not impose any new requirements.

We fully endorse the need for the Environmental Protection Agency to prepare and distribute to state and local governments technical information concerning the cost and availability of control technology. Such activity effectively supports state and local regulatory efforts without restricting the opportunity for state and local governments to taylor regulations to meet specific local conditions. We encourage continued publication of CTG's so long as they are informational and not regulatory.

Thank you for the opportunity to comment. If you desire additional information, please call.

Sincerely,

Roger R. Wallis, Deputy Director
Standards and Regulations Program

cc: Mr. Dick Whittington, P.E., Regional Administrator,
U.S. Environmental Protection Agency, Dallas

American Petroleum Institute
2101 L Street Northwest
Washington, D.C. 20037
202-457-7330

C. T. Sawyer
Vice President

March 11, 1982

Mr. D. R. Goodwin
Emission Standards and Engineering
Division
Environmental Protection Agency (MD 13)
Research Triangle Park, NC 27711

Dear Mr. Goodwin:

The American Petroleum Institute (API) herewith submits comment on the Control Techniques Guideline; Control of Volatile Organic Compound Equipment Leaks From Natural Gas/Gasoline Processing Plants listed at 47FR 3403 (January 25, 1982).

API maintains that this Control Technique Guideline (CTG) is unwarranted since EPA has not shown the need for such guidelines. Furthermore, EPA has failed to demonstrate the effectiveness of the control measures proposed, and has misrepresented the costs and cost effectiveness. Nevertheless, in response to the January 29, 1982, letter of Mr. J. R. Farmer, API offers the attached comments.

Our response is based on extensive first hand experience with gas plants and comprehensive experience with fugitive hydrocarbon emissions. API sponsored the most significant fugitive emissions study on production equipment (Eaton, et al, 1980) which has been performed. The study included two gas plants where a large number of components were tested. All of the gas plant data were provided EPA for use in formulating this CTG.

In addition to sponsoring the fugitive emissions study, API has met several times with EPA, as the CTG was being developed, to offer technical advice and the benefit of operating experience. Further, API presented a statement before the National Air Pollution Control Techniques Advisory Committee (NAPCTAC) when a preliminary draft of the CTG was reviewed (Woodruff, 1981). Extensive written comments were filed by API following the NAPCTAC meeting (Sawyer, 1981).

In some instances, EPA has accepted the API technical advice and responded to our other comments. Nevertheless, a number of serious concerns remain. Primarily, these concerns have to do with leak measurement method, transferability of information

from the petroleum refining and chemical industries, safety and economic analysis in support of this guideline. Our concerns are detailed in the attached comments.

If there are questions on these comments, contact Mr. E. P. Crockett, 202/457-7084.

Sincerely,

C T Sawyer

C. T. Sawyer

Attachments

AMERICAN PETROLEUM INSTITUTE

Comments on Draft
Control of Volatile Organic Compound Equipment Leaks from Natural Gas/Gasoline Processing Plants

(47FR 3403, January 25, 1982)

Chapter 2 -- Sources of VOC Emissions

1. General -- The process streams to which this CTG applies should be clearly stated. The requirements of the CTG should pertain to plant components in contact with fluids containing 10% or more volatile organic compounds (VOC) by weight since leaks from fluids containing less than 10% VOC represent deminimus losses. Excluded, therefore, from the provisions of this guideline would be (1) compressors handling only methane-ethane and (2) other equipment in hydrocarbon service where the VOC content is low.

Additionally, components installed on lines operating at negative gauge pressure should be exempted from this CTG, since leakage from the component is impossible. Otherwise valuable time and resources will be expended monitoring components having no actual potential to leak to the atmosphere.

Chapter 3 -- Emission Control Techniques

2. General -- Chapter 3 is lifted almost entirely from the CTG for fugitive VOC emissions from chemical manufacturing [EPA 1981] which is based on studies of chemical plant and refinery processes. There is no technical basis for the transferability of chemical

plant or refinery VOC emissions data to natural gas/gasoline processing plants because (1) the processes are different, (2) no description is provided of the statistical analysis of the Emission Source Test Data (CTG Appendix A) to demonstrate leaks were from gas-liquids handling components, (3) no derivation is provided of confidence limits to establish the correctness of the predictions and, (4) no comparison is supplied of gas plant data with the other study data. Following are some of the critical issues which must be addressed by the Agency in the CTG to demonstrate their recommendations have technical merit:

(1) What is the repeatability of the instrument reading?

(2) What is the accuracy of the instruement reading?

(3) What is the source of the estimate that after repair, 10 percent of the original number of sources develop leaks each quarter?

(4) What is the basis for the recommendation to isolate and purge a pump before repair? Is this feasible?

(5) Why is quarterly monitoring required for all valves, pumps and relief valves when existing data [Eaton, et al. 1980] dispute this monitoring frequency?

(6) Why is a 15 day (98%) repair interval recommended as opposed to a 5 day (99%) or a 30 day (96%)?

(7) What is the basis for the assumption that leak repair reduce emissions to 1000 ppm?

The above API concerns are not addressed by EPA in the CTG. Specifically, EPA is silent on the accuracy and repeatability of the instrument readings. Recent field testing shows the average error made by 15 people screening 28 leaks using a hydrocarbon detection instrument was 65,000 ppm. This represents

6.5 times the "action level" which triggers repair of a component and clearly demonstrates the poor repeatability of the instrument (see comment 4 below).

Additionally, the Agency has not supported the assumption "10 percent" of the original components will develop leaks quarterly. Eaton, et al. (1980) indicated a much lower rate of leak recurrence for components in production service. Further, the assumption repaired components emissions will be 1000 ppm is wholely unsupported by any documentation offered by EPA. Therefore, API concludes these parameters were selected arbitrarily.

3. Page 3-1, first paragraph -- It is stated that the CTG is based, in part, on the transfer of technology from other industries because of similarity in types of equipment used by these industries. Work practice/performance type control techniques may be applicable to gas plants from related industries. However, it is erroneous to imply other aspects such as specific sources, emission rates, monitoring techniques and maintenance schedules are directly transferable to gas plants from other industries since known differences exist in operating temperature, operating pressures, vibrational problems and product compositions. Radian (1980) and Eaton et al. (1980) document fugitive emission rates are independent of pressure and temperature within chemical plants, refineries and production facilities. However, there is no documentation to show differences do not exist between facilities within these related industries as the result of differences in temperatures and pressure. For example, most

modern gas plants are cryogenic plants. On the other hand, refineries and chemical plants operated at elevated temperatures.

The feed to a refinery is different than the feed to a gas plant. In fact the gas plant product is gas liquids (natural gasoline) which is one of the inlet streams to a refinery. The inlet to the gas plant is natural gas and its entrained (vaporized) liquids. Further, the vaporized hydrocarbon liquids in a refinery process are different than in a gas plant since the mixture is more complex. The mix is more complex because of the presence of heavier hydrocarbons with greater VOC emissions resulting from the higher temperature and pressures inherent with a refinery. EPA has not addressed these differences in the CTG. Thus, without supporting data, technology transfer is questionable at best.

4. Page 3-2, second full paragraph -- The CTG states without support the portable hydrocarbon detection instrument is the best survey method. The soap score method is discussed in the CTG in a negative and superficial manner. There is no discussion in the CTG of the limitations of the VOC analyzer. Some of the limitations of the detection instrument which must be dealt with are:

- Extreme delicacy of the instrument;
- Sensitivity to correct calibration;
- Weight and inconvenience of the instrument;
- Poor repeatability;
- Lack of demonstrated accuracy

- Time delay in achieving a reading; and
- Difficulty in receiving timely repairs.

The hydrocarbon detector is cumbersome and difficult to handle at gas plants. Many gas plant components are at elevated locations not accessible from platforms. For example, relief valves are located on top of fractionating columns. The need to access these gas plant valves is infrequent. Thus, platforms are not installed on the columns. Also, the columns are small in diameter, i.e., two to four feet at the top. Thus, space for a platform, piping and valves is limited. Monitoring of elevated components with a hydrocarbon detector at a gas plant requires the inspector to climb the column with the detector over his or her shoulder. At the top of the column the detector must be brought to the front of the operator, the probe moved about the surface of the potentially leaking component, and readings taken while standing on a ladder 50 - 80 feet above the ground. This acrobatic challenge is not impossible to perform, but it is difficult, dangerous and time consuming. The documented difficulty that a woman operator experienced in handling the instrument in a training program, along with her lack of confidence in the method, is related in Attachment A. During the training program, 15 participants measured 28 leaks (four times each). To assess variation in readings, calculations were made for (1) maximum OVA reading / minimum OVA reading, and (2) the absolute difference between the maximum and minimim readings. The results averaged overall the leaks are 240 for the ratio and 65000 ppm as hexane for the

difference. The OVA's were all calibrated immediately prior to the field work. This demonstrates the lack of repeatability of the instrument. It also brings into serious question the accuracy of instrument readings.

API has consistently advocated use of the soap score method as an effective, simple, economic screening method as demonstrated by Eaton, et al. (1980.) The only place where soap scoring is not applicable is on rotating and reciprocating equipment. Rotating equipment refers to liquid pumps in gas plants. Eaton, et al. (1980) shows liquid leaks are small. EPA data does not demonstrate this fact since their study did not differentiate between liquid and gaseous leaks. Additionally, EPA indicates leaks from reciprocating compressors need not be monitored, since most modern compressors are provided with closed distance pieces which will be vented. Thus, the alleged advantages of the instrument monitoring technique are not utilized in practice. We urge EPA to adopt the soap score method as the principal leak detection technique since the instrument technique is known to be non-repeatable.

5. Page 3-3, 3.1.2.1, last sentence -- Isolating the pump and flushing it of VOC prior to pumps repacking or seal replacement is vague and difficult to understand. Additionally, the flushing fluid must be disposed. It cannot be returned to the process stream. Thus, flushing does not appear practical, and the sentence should be deleted.

6. Page 3-3, 3.1.2.2 -- Collection and combustion of emissions from the compressor seal area is impractical, unsafe, and not cost effective. Reducing the compressor seal concentration level below 10,000 ppm by repair is very difficult and often impractical based on experience during the API maintenance study. Although compressor seal areas are frequently enclosed and vented outside of the compressor building (S2.2.2), these vents are unrestricted in most Natural Gas/Gasoline Plants unless hydrogen sulfide is present.

In some cases it is also dangerous, if not impossible, to enclose the distance piece to hold gas pressure from a leaking packing. For example, one compressors model will not hold over 5 psi pressure without blowing the metal cover off the distance piece according to the manufacturer. The potential also exists, in some cases, for pressurized hydrocarbons to pass through the engine crank case seal and enter the crank case thus creating an explosion hazard.

The fact that 80% of the gas content is non-reactive methane-ethane makes these systems different from the typical refinery compressor systems used as the reference case. In gas plants this emission source represents only 2.6% of the VOC emissions (Table 4-2) and the cost of control, in a safe manner, is unreasonably high. Additional block valves, a pressure control valve, and a pressure relief valve between the compressor and the first block valve are all required for a safe connection of this vent line to a flare line. The assumed materials and labor

in Table 5-1 are deficient and both are about one-half of the real cost when allowances are made for pressure relief valves, pressure control valves, unions and the actual installation labor. The result is a capital cost of about $11,000 in a Model "C" plant to collect 7.3 megagrams of VOC annually. This amounts to 19,5% of the RACT capital cost to eliminate only 2.5% of the VOC emissions from gas/gasoline plants. The VOC emission elimination cost of $1,507 per megagram is unreasonably high and this control technique should not be considered RACT. Compressors should be exempt from control, or the action level raised to a reasonably attainable level.

7. Page 3-8, 3.1.3.3 -- The CTG specifies 15 days for required repair without explanation. This could represent as few as nine scheduled work days at plants where repair crews may only be available two or three days per week. The repair of all leaks detected within fifteen days may be impossible. A 30 day repair period would be more appropriate.

8. Page 3-16 -- There is a numbering error on pages 3-16 and 3-17. Paragraphs 3.2.1, 3.2.2, and 3.2.3 should be 3.3.1, 3.3.2 and 3.3.3. Our comments are based on the numbers shown in the CTG.

Chapter 4 -- Environmental Analysis of RACT

9. Page 4-1, second paragraph -- The soap score method should be adopted as the principal leak detection method as discussed in comment 4 above.

10. Page 4-2, 4.0, last paragraph -- This paragraph is misleading in casting doubt on the viability of soap score monitoring. Further, it is not likely an acceptable correlation between soap scores and instrument readings will be established since the instrument readings are not repeatable. Accordingly, this paragraph should be deleted from the CTG.

11. Page 4-9, Table 4-6 -- This table is in error. Recovered energy for open-ended lines should be corrected to 250 bbl crude petroleum/yr equivalent.

Chapter 5 -- Control Cost Analysis of RACT

12. Page 5-1, 5.1 -- The economic analysis has equated "front end costs" with "capital costs." Capital cost has an extremely limiting economic definition which does not allow the inclusion of operating cost. Only the VOC analyzer and the piping of the compressor seal emission should be defined as capital costs. The remaining costs incurred are classified as expenses. Expense and capital costs cannot be combined without using an amortization schedule for the life of the capital purchases.

13. Page 5-1, 5.1.1 -- The estimated cost for capping open flow lines is based on the price of a one-inch screw-on type globe valve. EPA assumed that any larger line size can be reduced to one inch. Normally, gas lines are specific sizes for a reason (e.g., the hose size to be attached), and therefore can not be reduced arbitrarily. According to CTG Appendix A (Table A-2), 721 open-ended lines were tested. Those data could be used to

develop a distribution of line sizes and choose an appropriate average valve cost rather than make questionable assumptions.

In the economic analysis, the double valving of an open-ended line has been assumed to be a capital cost. Installed equipment costs of less than $250 are rarely considered to be a capital cost. In fact, both the valves and labor to install the double valves are expense costs. In addition, the estimated cost of adding the valves to open-ended lines was underestimated due to the omission of miscellaneous costs, e.g., record keeping, vehicle use, source identification and tagging.

14. Page 5-4, 5.1.4 -- There is a discrepancy between 43 hours for a pump seal repair and Table 5-2 which shows 11 hours for repair for the same seal.

15. Page 5-4, 5.1.4 -- The statement:

> "Because initial leak repair is a one-time cost, it is treated as a capital cost."

is not correct because a one time expenditure is not a correct criteria to define a capital cost. The initial leak repair is a one time operating cost and must be included in the initial cost of emissions reduction, not distributed over a reasonable time period as proposed. For example, reducing the financial the first year's repair cost is distributed over ten years forcing a reduced impact. The emissions reduction realized during the first year will not, however, be saved each year as assumed. Each year's cost must be compared against each year's corresponding benefits to determine the cost effectiveness of RACT.

16. Page 5-4, 5.1.5 -- RACT for the process controls and actuators has been defined as conversion to compressed air. With no estimate of VOC emissions saved and no economic analysis, there is no support for this RACT. The expectation that most gas plants already use compressed air does not constitute justification for RACT.

17. Page 5-6, 5.2.1 -- The cost analysis for the labor associated with leak detection severely underestimates the actual cost. Whether it requires one minute for VOC sampling of a valve or 5 minutes is a function of such factors as the plant configuration, the monitoring method, the personnel, the weather, and the location of the component. While there is no current evaluation of this activity for gas plants, the reference cited (letter from J. M. Johnson, Exxon, 1977) is not appropriate for gas plants and out of date. The information contained in that letter was determined for refineries for an entirely different purpose. An API member company has obtained recent and realistic cost information from independent firms performing VOC monitoring. These firms have identified the cost per source tested. Although contracting the monitoring to a third party may be slightly higher (assume 15 percent profit) than performing the monitoring program internally, these costs include all of the associated hidden costs and overhead. Typical bids from contractors who regularly perform this service vary from $1.80/source/sampling for an unsophisticated system with 100,000 to 200,000 fugitive sources to $5.60/source/sampling for a computerized data system,

with the majority in the $2 to $4 range. A $4/source/sampling is a reasonable contractor cost, assuming 15 percent is profit. Deducting contractor profit, it is possible for an operator to monitor his own VOC sources for approximately $3.50/source (1981 dollars). This estimate does not include leak repair; resampling after the repair; or initial design, acquisition or implementation of the monitoring network. The development and implementation of a new monitoring program will be about equal to the first year sampling cost for smaller gas plants (such as Model Plant A) and 60 percent of the first year's cost for larger gas plants - plus the cost of the instrumentation.

In brief, the estimated cost of solely maintaining a monitoring program is 5 to 6 times the estimate cited in the CTG, assuming $3.50/source/sample and referring to Table 5-4. First the approximations for man time are extremely low. In addition, front-end set-up costs; depreciation on the equipment; and maintenance on the VOC analyzer must be included. Furthermore, the cost analysis must include the cost of the otherwise unnecessary platforms for each inaccessible source. If other options are implemented, such as mobile platforms, then the time and cost required to sample each valve must be included in the economic analysis.

18. Page 5-6, 5.2.2 -- The estimate for leak repair costs consider only the labor of actually repairing the valve or pump. Omitted is a number of associated hidden costs such as record keeping, use of a vehicle, provisions for inaccessibility, cost

of repair parts, loss of production, and overtime factor. If the gas plant is keeping sufficient records to take advantage of the statistical relief of Section 3.3, the costs are further increased. Although actual cost of repair is facility dependent, a realistic estimate of maintenance costs are $120/repaired valve and $1000/repaired pump. Relief valves are included in the number of valves. Even if the valve only requires reseating, qualified maintenance personnel must perform the function and the choice of personnel is not optional, especially under union contracts.

19. Page 5-10, 5.2.6 -- Using 1981 dollars for recovery credits, realistic estimates are nearly twice what is quoted in the CTG in value per gallon and one and a half times that per MCF. The error in these approximations is partly due to the assumption that all the VOC is propane. The recovered VOC is 6 lbs/gal rather than 4 lbs/gal if the correct product density for propane is used. Therefore, the value of the recovery credits per Mg is $146 not $210.

20. Page 5-10, 5.3 -- In section 5.3 the "cost" of RACT has been estimated. The conclusion, based on erroneous assumptions discussed above, is (with the exception of the smallest plants) the petroleum industry has lost significant revenue due to the lack of controlling the VOC emissions. In reality the costs of implementing and maintaining the recommended control of VOC emissions from a gas plant are greater than estimated and a net long-term loss will result from the use of this RACT based on the above cost information.

Appendix B -- Model Plants

21. Page B-1, B.1 -- The three model plants were developed from questionable data. All four should be included in the analysis or the reason for including only two of four EPA tested plants in the vessel and component inventories should be explained. Final selection by API of two plants was based on maximizing the number of components at sites for emission measurements. The resulting API component inventories at the tested plants are unusually large and thus of questionable value in developing model plant configurations.

References

Eaton, W. S., et al. [1980]. Fugitive Hydrocarbon Emissions From Petroleum Production Operations. API Publication 4322, March, 1980.

Woodruff, W. J., [1981]. Phillips Petroleum Company, Statement on Behalf of the American Petroleum Institute before the National Air Pollution Control Techniques Advisory Committee, Raleigh, NC, April 29, 1981.

Sawyer, C. T., [1981]. Letter to The National Air Pollution Control Techniques Advisory Committee, May 15, 1981.

EPA [1981], Guideline Series, Control of Volatile Organic Coumound Fugitive Emissions from Synthetic Organic Chemical, Polymer, and Resin Manufacturing Equipment.

Radian [1980], Assessment of Atmospheric Emissions from Petroleum Refining.

(REV. 5-78)

Shell Oil Company
Interoffice Memorandum

FEBRUARY 5, 1982

FROM: SENIOR ENVIRONMENTAL ANALYST
PACIFIC DIVISION, VENTURA

TO: SENIOR STAFF ENVIRONMENTAL SPECIALIST
WESTERN E&P OPERATIONS

On January 25, 1982, I attended a Rockwell International school to learn how to operate an OVA. I would like to pass on my impressions of the instrument.

First, you cannot get the same measurement twice. My inspection partner and I seldom agreed on a reading, even though our measurements were taken seconds apart. In fact, after comparing our readings, we would each take a second measurement, thereby ending up with four different answers. I would add that the weather conditions were calm. Wind would have only aggravated the situation.

Second, the OVA weighs about 15 pounds. My shoulders and neck area began to throb after 30 minutes or so. Further, the bulk and weight of the instrument caused some safety problems when I had to stand near the edge of a platform, tending to pull me backward and making it difficult to turn around.

Third, it is necessary to check the entire circumference of a component and record the highest reading. In many cases it was impossible to do so due to the size of the probe and the equipment spacing. This situation requires two people -- one to hold the meter and the other to read it. In such tight quarters, the two people are apt to get in each other's way and are forced into some interesting gymnastics. Also, the OVA itself tends to free swing into the equipment while the inspector tries to maneuver the probe, risking damage to this very sensitive instrument and anything nearby. In view of these problems, we would not expect anyone to take measurements from positions that would be hazardous such as ladders.

In short, I found that the OVA is awkward to use and completly unreliable. On a positive note, some models are explosion-proof.

Sharon Walker

S.S. Walker

SSW:jk

MICHIGAN WISCONSIN PIPE LINE COMPANY
MEMBER OF THE AMERICAN NATURAL RESOURCES SYSTEM
ONE WOODWARD AVENUE DETROIT MICHIGAN 48226

March 11, 1982

Emission Standards and Engineering Division (MD-13)
Environmental Protection Agency
Research Triangle Park, North Carolina 27711

Attention: Mr. Jack R. Farmer

Re: Control Techniques Guideline Document Equipment Leaks from Natural Gas/Gasoline Processing Plants

Dear Mr. Farmer:

The following comments, on the referenced document, are being submitted by Michigan Wisconsin Pipe Line Company (Michigan Wisconsin) which owns and operates an extensive interstate natural gas transmission and underground storage system. Michigan Wisconsin transports gas from producing fields in the Oklahoma-Texas Panhandle area, Louisiana and offshore in the Gulf of Mexico and through connecting pipelines from Canada to 52 distributing utilities in nine states. Michigan Wisconsin and its subsidiary ANR Production Company are also engaged in exploration for gas and oil in the major gas prone areas of the South, Southwest, Rocky Mountains, Michigan, Offshore in the Gulf of Mexico and in Western Canada.

We have carefully reviewed the above referenced report, which is clearly well researched and we are in agreement with many of the proposed control techniques. However, there are certain requirements which concern us and we have concentrated our comments on these requirements.

Emission factors presented in this document are based on natural gas liquid processing plants, gasoline plants and natural gas liquid fractionation plants. For natural gas gathering plants and natural gas dehydrating plants, emission factors for non-methane/nonethane hydrocarbons (VOC's) will be much smaller because the ratio of methane and ethane to total hydrocarbons is much larger for these facilities. The costs of implementing Reasonably Available Control Technology (RACT) for controlling fugitive emissions of Volatile Organic Compounds (VOC) cannot be justified, for such facilities because the quantity of non-methane/non-ethane hydrocarbons is very small for natural gas gathering plants.

There are leak prevention and control procedures in place at most natural gas plants in compliance with minimum federal safety standards. The proposed technology in this document will be repetition in most instances and increase regulatory burden.

Costs projected for converting from natural gas to compressed air actuated control valves should also include costs for the air compressor. Compressed air is generally not available at most small natural gas compressor stations, natural gas gathering and dehydration plants. The cost cannot be justified for remote locations, which are not sources of large quantities of VOC's.

Cost of a portable VOC analyzer is reported to be $4,600 by the report. "The annual cost of materials and labor for maintenance and calibration of monitoring instruments is estimated to be $3,000." The combined cost of $7,600 per year is very large compared to currently practiced technology of leak detection, which employs visual, olfactory or audible means for the purpose.

Based on our past experience in controlling leaks and successful operation of natural gas processing/compression facilities, a Table comparing our current practice and proposed techniques is attached for comparison. The table will show that in most instances, proposed control techniques are already in practice, at our facilities.

Michigan Wisconsin would like to thank you for providing this opportunity to comment on this document. We believe that the present techniques employed by natural gas liquid removal, dehydration, and compression facilities are adequate and the majority of the emission factors developed in this document should not be used to judge performance of these facilities.

Sincerely yours,

Jiten V. Mehta

Jitendra V. Mehta,
Environmental Engineer

Attachment

cc: Messrs. J. P. Cencer
V. D. Lajiness
R. J. Lecznar
P. B. Thompson
Mrs. M. L. Webster

File

BY

MICHIGAN WISCONSIN PIPE LINE COMPANY

	Component	RACT (Reasonably Available Control Technology)	General Practice	Comments
1.	Pumps	Weekly visual inspection.	Same or better	RACT acceptable
2.	Valves Compressors Relief valves Pumps	Quarterly leak detection using portable VOC analyzer.	Daily inspection only using visual, and olfactory means. (Portable combustible analyzer used only prior to welding).	VOC analyzer would cost $5,000.00 or more - RACT not acceptable.
3.	Relief Valves	Monitored and Repaired after venting to the atmosphere.	Same	RACT acceptable
4.	Any	If found leaking without instrument monitoring should be repaired.	Same	RACT acceptable
5.	Flanges or Connections	Routine instrument monitoring not necessary	Same	RACT acceptable
6.	Pneumatic Valves	Operate with compressed air. Do not use field or flash gas.	Many locations use gas as a control medium.	RACT is not acceptable
7.	Leaking Components	Based on instrument monitoring repair within 15 days. (If necessary up to one year.)	Based on visual olfactory or noise inspection repair leaks within a day.	RACT is acceptable, if instrument monitoring is not imposed.
8.	Open ended Lines	Sealed with a second valve, blind flange a cap or a plug.	Some sites follow it. Older facilities may not have them.	RACT may be acceptable
9.	Compressor Seals	Leak detection and repair using instrument or compressor vent control system.	Visual, olfactory or noise detection of leak and repair.	RACT is not acceptable. Instrument monitoring is not acceptable.

Chevron

Chevron U.S.A. Inc.
555 Market Street, San Francisco, California • Phone (415) 894-3041
Mail Address: P.O. Box 3069, San Francisco, CA 94119

R. W. Kreutzen
General Manager
Environmental Affairs

March 12, 1982

Draft CTG for Natural Gas/Gasoline Processing Plants

Mr. Jack R. Farmer, Chief
Chemicals and Petroleum Branch
Emission Standards and Engineering Division (MD-13)
Office of Air Quality Planning and Standards
U.S. Environmental Protection Agency
Research Triangle Park, North Carolina 27711

Dear Mr. Farmer:

Chevron is happy to comment on the draft CTG for natural gas/gasoline processing plants. We note considerable similarity between this document and the draft NSPS for VOC emissions, upon which we commented last November 16. There are enough differences between the two drafts, however, to warrant our offering a new set of comments.

Section 2.2.7 Gas-Operated Control Valves

No actual emission factors are given for these valves, nor any indication of how many use compressed air vs. "field gas." If the "field gas" is natural gas, very little nonmethane/-nonethane hydrocarbon will be present.

Table 2-2 Baseline Emission from Model Plants

The baseline emissions are based upon the emission factors in Table 2-1. Although the 95% confidence interval for these factors is extremely large (generally a factor of five or more), there are no error estimates for the total baseline emissions. What are the confidence figures on these numbers?

Section 2.3 Baseline Fugitive VOC Emissions

Estimating components by ratioing to major equipment has merit. However, ratioing components to all vessels pooled together (columns, heat exchangers, and drums/tanks) is an oversimplification, as demonstrated by Table B-3. Comparing the average ratio of flanges and connections to vessels (97.4) and the standard deviation of the ratio (59.7) shows the correlation is sometimes poor. This is also confirmed by the disparate ratios reported -- about 50 for the EPA-tested plants and about 150 for the industry-tested plants.

Section 3.1.1 Individual Component Survey

This section fails to mention the considerable problems associated with maintaining and operating a portable hydrocarbon analyzer. They are temperamental precision instruments sensitive to heat, humidity, and the type of gas being sampled. Reliable use requires thorough personnel training and careful maintenance and calibration procedures. For example, the inspection and maintenance program in Chevron's El Segundo refinery requires one full-time person to maintain and service the detectors. Even if the same type of instruments are calibrated and used side by side, reproducible results can be elusive. This has been Chevron's experience at our Ventura County, California production facilities. The point is that portable hydrocarbon analyzers are very tricky, and their required use could be a considerable burden on smaller operators.

Monitoring requirements for unsafe and difficult to reach components should receive special consideration. At the least, this CTG should include the attached statement taken from the draft CTG on "Control of Volatile Organic Compound Fugitive Emissions from Synthetic Organic Chemical, Polymer, and Resin Manufacturing Equipment" (August, 1981).

Section 3.1.2.1 Pumps

It is stated that a pump should be isolated from the process and flushed of VOC as much as possible prior to repacking or seal replacement. The reason for doing this would be to assure that the temporary VOC emissions from repair do not exceed the emissions from the original leak. We believe that in practice this would be nearly impossible to do. EPA should consider the prospect that the emissions resulting from the repair of a pump leak could offset any long-term benefits, depending on the extent of the original leak.

Section 3.1.2.2 Compressors

We must take strong exception to the control strategy discussed here for reciprocating compressors. There are serious physical and safety considerations associated with enclosing compressor seals in the manner suggested. Rather than detail these issues here, let me refer you to K. C. Hustvedt of your RTP facility, who is very familiar with the issues raised by industry when a similar strategy was proposed for refineries.

Table 2-2 assigns compressors only 3% of the total gas plant emissions. In view of the serious problems associated with controlling these emissions, we strongly urge that this strategy be dropped.

Section 3.1.3.2 Inspection Interval

The draft CTG apparently considers only quarterly inspection intervals. EPA should seriously consider annual inspections, since quarterly inspections are practical only for a relatively small number of major components (like compressors). Even in Los Angeles, which generally has the toughest hydrocarbon control regulations in the nation, inspection with a

detector is required annually for pumps, valves, and flanges, and quarterly for compressors. More frequent inspections are not judged cost effective.

Section 3.1.3.3 Allowable Interval Before Repair

The report suggests that 15 days is reasonable to allow a plant operator enough time to obtain repair parts. While often true for readily available parts, this time is much too short for difficult-to-get parts. Allowing sixty days in such special cases is more reasonable.

Section 3.3 Other Control Strategies

It is suggested that if less than 2% of the valves are found to be leaking, then the operator may skip inspections. We feel this a good concept, but it should be extended. The CTG still requires that inspections be carried out on a yearly basis. We believe that if data indicate a longer time interval would maintain a leak rate of less than 2%, then this inspection interval should be used. In addition, we can see no reason not to apply this concept to other fittings as well as valves.

The subsections in section 3.3 are misnumbered.

Chapter 4.0 Environmental Analysis of RACT

This chapter could be improved considerably by looking at other inspection intervals. We thought the corresponding information in the NSPS was much more comprehensive and generally pretty accurate (with certain exceptions noted in our earlier letter). We would encourage you to add some of this information to the CTG.

It is interesting to compare the values given in Tables 4-2 and 4-3 with Chevron's Los Angeles area refinery experience. The inspection and maintenance program for valves at our El Segundo refinery (10,000 ppm cutoff, annual inspection) yields a reduction efficiency of about 65%, not too far from the entry in Table 4-3 for quarterly inspections.

On the other hand, our I&M program for compressors (quarterly inspections) yields about a 35% reduction. The 100% reduction noted in Table 4-2 is not realistic (see our comment on section 3.1.2.2).

Chapter 5.0 Control Cost Analysis of RACT

We have some concerns about the costs that were used in estimating the cost effectiveness of the CTG.

a. We currently would estimate the cost of labor to be $23.00 per hour rather than $18.00 per hour (28% higher).

b. We do not believe a venting system could be installed on compressor seals for $700.00 (page 5.10). National Air Oil Company estimates the cost of their smallest flare to be $8,000. This would not include the cost of piping to each seal.

Cost effectiveness numbers are given for a RACT program involving quarterly inspections. While these numbers are somewhat open to questions, for the reasons given earlier, the lack of incremental cost effectiveness calculations is a serious omission. What is the incremental cost effectiveness for annual or monthly inspections versus quarterly, for example?

* * * * * *

We hope these comments are helpful. For your information, we are attaching a copy of a technical paper given last November, which describes Chevron's experience with I&M programs at our El Segundo, California refinery. If you wish to discuss our comments further, please contact Michael Foster of my staff at (415) 894-6107.

Very truly yours,

R. W. Kirstetter

MSF:rdg
Attachments

ATTACHMENT

The following statement is from the Draft CTG: "Control of Volatile Organic Compound Fugitive Emissions from Synthetic Organic Chemical, Polymer, and Resin Manufacturing Equipment" (August, 1981, page 3-20).

Unsafe and Difficult to Reach Components

Some components might be considered unsafe to monitor because process conditions include extreme temperatures or pressures. A State agency may wish to require less frequent monitoring intervals for these components because of the potential danger which may be presented to monitoring personnel. For example, some pumps might be monitored at times when process conditions are such that the pumps are not operating under extreme temperatures or pressures.

Some valves may be difficult to reach because access to the valve bonnet is restricted or the valves are located in elevated areas. These valves might be reached by the use of a ladder or scaffolding. Valves which could be reached by the use of a ladder or which would not require monitoring personnel to be elevated higher than two meters might be monitored quarterly. However, valves which require the use of scaffolding or which require the elevation of monitoring personnel higher than two meters above permanent support surfaces might be monitored annually, for example.

CONTROL OF FUGITIVE HYDROCARBON EMISSIONS IN PETROLEUM REFINERIES

Charles W. Aarni
Chevron U.S.A.
El Segundo, California

Clayton R. Freeberg
Chevron Research Company
Richmond, California

For presentation at the Annual AIChE Meeting in New Orleans on November 8-12, 1981.

A B S T R A C T

This paper discusses the effect of two inspection and maintenance (I & M) programs for reducing fugitive hydrocarbon emissions at Chevron's refinery in El Segundo, California. Two I & M regulations, one covering valves and flanges and the other covering pumps and compressors, have been imposed on this refinery by the South Coast Air Quality Management District. First-hand experience in meeting these regulations is presented along with estimates of hydrocarbon emission reductions and estimates of the cost effectiveness of the regulations. The paper also explains how to estimate fugitive hydrocarbon emissions for new facilities, which is necessary to obtain construction permits.

SUMMARY

Ozone levels in the South Coast Air Basin, which include parts of four counties in the Los Angeles Area, currently exceed the national ambient air quality standard for ozone. This has resulted in the South Coast Air Quality Management District (SCAQMD) establishing several regulations to reduce emissions of hydrocarbon, an ozone precursor. Consequently, Chevron's El Segundo Refinery has had several years of experience with two SCAQMD regulations requiring inspection and maintenance (I & M) programs--one for valves and flanges and another for pumps and compressors. Based on this experience and the use of the emission factors from a recent Radian report,[1] results indicate that the valve I & M program currently achieves a net economic return. The effect of the flange I & M program has not yet been completely evaluated, but it currently appears to be less cost effective than the valve program. The pump and compressor I & M program has a significant net cost ($1-$2/lb hydrocarbon controlled) because of the higher maintenance cost involved in replacing pump and compressor seals. Proposed future regulations are estimated to be much more costly (perhaps $5/lb); therefore, industry must continue to provide input to regulatory agencies to ensure that the most cost effective controls are implemented.

Chevron's experience with I & M programs has proven to be an asset in obtaining construction permits from regulatory agencies. An accurate prediction of the fugitive emission control programs has provided significant emission information which can now be used to develop more valid estimates of emissions from proposed new facilities.

INTRODUCTION

Under the Clean Air Act, the South Coast Air Basin must meet the ozone standard. This will require further reduction of hydrocarbon emissions. In addition, many states are adopting New Source Performance Standards which include fugitive emission controls and which will affect almost all new facilities or major modifications. Thus, operators in ozone nonattainment areas are being confronted with the need to participate in the development of new regulations to ensure that the most cost-effective controls are used first.

At Chevron's El Segundo Refinery, which is located in the South Coast Air Basin, controls on hydrocarbon emissions have been coming into effect over the past 25 years. During this time, many major sources of hydrocarbon emissions have been controlled. These include tanks, oil/water separators, valves, flanges, pumps, and compressors. Yet, the Basin is still nonattainment for ozone. While mobile sources

represent more than half of the hydrocarbon emissions in the basin, Chevron expects additional controls to be imposed on stationary sources. Such measures will be more expensive and difficult to implement than those in the past.

OVERVIEW OF ONE REFINERY'S HYDROCARBON EMISSIONS

A summary of the estimated hydrocarbon emissions for Chevron's El Segundo Refinery is shown on Table I. These emission estimates include reduction credits for existing control measures, such as secondary seals on floating roof tanks, various modifications to bulk loading facilities, and limitations on the use of paints and organic solvents. Fugitive emissions are by far the largest remaining source category of hydrocarbon emissions within the refinery.

A breakdown of the various fugitive emission sources is shown on Table II. Unless otherwise noted, the emission estimates are based on emissions factors from a study of refinery fugitive emissions done by Radian Corporation.[1] Even with the fugitive emission controls currently in place, the emissions from valves, flanges, pumps, and compressors account for approximately 86% of the total fugitive hydrocarbon emissions from the refinery. The emissions shown for gas and light liquid valves include credit for a 65% reduction from the uncontrolled value based on the results of the existing I & M program.[2] No reduction credit was assumed for the flange I & M program since it has not yet been completely evaluated. The emissions from light liquid pumps and hydrocarbon gas compressors were reduced by 35% from the uncontrolled value. The 35% reduction was estimated by SCAQMD. Both the valve and flange rule and the pump and compressor rule apply to hydrocarbon gas and light liquid streams only. The SCAQMD defines a light liquid to be a hydrocarbon liquid with a Reid vapor pressure $\geq$1.55 psia. El Segundo Refinery's I & M programs for valves and flanges and for pumps and compressors will be discussed in detail below.

In addition to the two most significant rules covering valves, flanges, pumps, and compressors, there are six other rules limiting fugitive hydrocarbon emissions which have been passed by the SCAQMD. These rules regulate sources such as oil/water separators, bulk loading of organic liquids, gasoline transfer and dispensing operations, vacuum producing devices, relief valves, and process turnarounds. The impact of these other rules has not been nearly as significant as the impact of the valve and flange rule or the pump and compressor rule, and they will not be discussed in detail in this paper. This paper will discuss on the valve and flange rule and the pump and compressor rule.

Table I

Refinery Hydrocarbon Emission Summary

Emission Source	Lb/Day	% of Total
Combustion Sources[1]	500	2
Solvents/Organics[2]	400	1
Tanks[1]	2,300	9
Bulk Loading[2]	600	2
Fugitive Emissions[3]	23,200	86
Total	27,000	100

[1]Based on EPA's "Compliance of Air Pollutant Emission Factors," AP-42, effective April 1981.

[2]Based on South Coast Air Quality Management District emission factors with current controls in effect.

[3]See Table II for emission basis.

Table II

Fugitive Emission Summary[1]

Fugitive Emission Source	Lb/Day	% of Total Fugitive Emissions	% of Total Refinery Hydrocarbon Emissions
Flanges[2]	1,600	7	6
Valves			
Gas and Light Liquid[3,5]	13,600	59	50
Heavy Liquid[6]	300	1	1
Compressors[4]	700	3	3
Pumps			
Light Liquid[4,5]	2,000	9	7
Heavy Liquid[6]	700	3	3
Relief Valves	200	1	1
Separators[7]	900	4	3
Cooling Tower[7]	1,500	6	6
Drains	1,700	7	6
Total	23,200	100	86

[1]Unless otherwise noted, calculations are based on Radian emission factors for nonmethane hydrocarbons.
[2]No reduction credit is assumed for the flange I & M program since the program is not yet completely evaluated.
[3]A 65% reduction is applied to hydrocarbon gas and light liquid valves to account for the I & M program. The method for calculating the percent reduction is outlined in Reference 2.
[4]A 35% reduction is applied to account for the I & M program.
[5]Light liquid is any liquid with Reid vapor pressure $\geq$1.55 psia.
[6]Heavy liquid is any compound with Reid vapor pressure <1.55 psia.
[7]Based on emission factors from EPA Publication AP-42 (October 1977).

PHILOSOPHY OF THE RULES

During the development of the valve and flange rule and the pump and compressor rule, two significantly different approaches were proposed. The first, which was put forth by the regulatory agencies, stressed enforcement of the rule. The basic concern was how to ensure that companies were complying with the rule. So the agencies proposed that any leak found by an agency inspector would be a violation. However, this concept could create major problems for inductry since it is impossible to stop all equipment leaks. At any given time, there will be some fraction of the valves, flanges, pumps, and compressors which leak. In addition, leak rates are variable--a piece of equipment may not be leaking one day but be leaking the next day. These facts must be recognized in the rule development process.

Therefore, the industry approach was that the rules should require repair of all leaking equipment within a certain time period. A leak found by an agency inspector is not a violation, but it must be repaired. A rule of this sort achieves the desired emission reduction through inspection and directed maintenance without penalizing an operator for expected occurrences beyond his control. This is the approach which finally prevailed.

VALVE AND FLANGE RULE

The valve and flange rule requirements are shown in Table III. The 1.55 psia RVP limit makes a split between naphtha and kerosene which is the same split made by Radian Corporation in their studies of fugitive emissions.[1] Valves and flanges in heavy liquid service have very low fugitive hydrocarbon emissions, and so they are exempt. Ethane and methane are exempt because they do not contribute significantly to photochemical smog. Also, any stream containing more than 80% hydrogen is exempt.

Currently, every valve and flange subject to the rule must be inspected annually with a portable hydrocarbon detector. This requires a full-time three-man team in the field plus additional support people. The three-man team inspects and makes the first attempt to repair every leak found. The team consists of:

1. Operator - Identifies applicable valves and flanges and records the data. Assists in securing a valve for repacking or replacement.

2. Technician - Operates and services the hydrocarbon analyzer.

Table III

SCAQMD
Valve and Flange
Rule Summary

Applicability

- Applies to hydrocarbon gas and liquid streams with Reid vapor pressure >1.55 psia, except methane and ethane.

Inspection Requirements

- Two complete valve inspections during the first year.
- One complete valve inspection each year thereafter.
- One complete flange inspection each year effective May 1980.
- Reinspect each leaking valve three months after repairs are completed.

Leak Definition

- Liquid leakage at rate >3 drops per minute.
- Gaseous hydrocarbon concentration ≥10,000 ppm at the source.

Repair Requirements

- Repair to nonleaker status (<10,000 ppm) within two working days.
- Nonrepairable valves or flanges must be vented to pollution control device or a variance obtained.

Recordkeeping Requirements

- Maintain records of valve inspections for one year.
- Make records available to the District upon request.
- No records required for flange inspections.

Exemptions

- Natural gas valves and flanges.
- Hydrogen valves and flanges (>80% H_2).
- Inaccessible valves and flanges.

3. Mechanic - Performs necessary maintenance.

The team is equipped with a Century OVA-108 hydrocarbon analyzer. This analyzer satisfies the instrument performance standards imposed by SCAQMD.

In the field, the technician measures the hydrocarbon concentration at the source with the analyzer. The operator records the data. All valves tested are counted, but only those with emission concentrations greater than 10,000 ppm have detailed data recorded to identify them (e.g., plant, size, type, service, leak concentration). A bright orange numbered tag is attached to each of these valves. These tags help the inspection teams relocate the leakers during the quarterly reinspections.

The mechanic on the team attempts to repair a leaker as soon as it is found. Since the inspection team is still in the area, the repaired valves are reinspected immediately. Considerable followup maintenance time is reduced by streamlining the repair and reinspection program in this way.

Some valves and flanges are inaccessible. These are the valves and flanges which cannot be inspected or repaired without excessive cost and effort. Based on this criterion, less than 4% of the valves and flanges are considered inaccessible.

There are two additional full-time technicians involved with this program, one who performs the reinspections with a hydrocarbon analyzer and another who handles the recordkeeping duties. All of the records required by this rule are kept on a computer. The computer greatly reduces the labor spent in data compilation and data handling. In addition, the computer provides a tickler file which flags any special action, such as reinspection of a repaired leak.

The results of the I & M programs to date are shown in Table IV. The first complete inspection showed that 4.3% of the valves subject to the rule were leaking in excess of 10,000 ppm. The leak rate during the second inspection six months later was 2.2%. The third and fourth inspections, which were done at 12-month intervals, showed an average of 2.8% leakers. Based on this average leak rate and the emission factors from the Radian report[1], the calculated emission reduction from valves is currently about 19,000 lb/day. This results in a net economic return assuming a hydrocarbon value of $0.10/lb. If Chevron were to use the emission factors from EPA Publication AP-42 (October 1977), which are significantly lower than the newer Radian[1] factors, the estimated hydrocarbon savings would not offset the cost of the program.

Table IV

Valve and Flange Inspection Results

Inspection Period	No. Valves Inspected	No. Valves Leaking	% Values Leaking	No. Flanges Inspected	No. Flanges Leaking	% Flanges Leaking
January-June 1979	24,482	1042	4.3	ø[1]		
July-December 1979	35,394	764	2.2	ø[1]		
1980	31,487	991	3.1	26,330[2]	148	0.56
1981	31,096	822	2.6	31,948	157	0.49

[1]Flange inspection requirements added May 1980.

[2]Flange results include only process units inspected after May 1980.

Some new regulations currently being considered by SCAQMD, such as including heavy liquid valves in the I & M program and increasing the inspection frequency, would be much less cost effective than the present program. For example, the incremental cost effectiveness of adding the heavy liquid valves to the program would be about $5/lb of hydrocarbon controlled, which is currently not considered economically justified by most regulatory agencies and industry.

PUMP AND COMPRESSOR RULE

The current rule requirements for pumps and compressors are shown in Table V. This rule applies to pumps in light liquid service and compressors in hydrocarbon gas service. The affected refinery stocks are the same stocks as those covered by the valve and flange rule.

In the case of the pump and compressor rule, there are two kinds of leaks--visible leaks and leaks detectable only with a hydrocarbon analyzer. Visible leaks are defined as a visible mist or three drops/minute of liquid leakage. The early version of this rule, which has been in place for several years, required only that all pumps and compressors subject to the rule be inspected once a shift for visible leaks and that all leaks must be repaired. Any visible leak found by a District inspector is an immediate rule violation.

Since the rule was first passed in 1976, there have been many changes in the area of fugitive emission control. There has been an improvement in technology available to control and quantify the emissions as well as a vast improvement in the understanding of fugitive emissions. Fugitive emissions are known to be much more significant than was originally thought.

The need for further hydrocarbon reduction led to the development of another inspection requirement for pumps and compressors which became effective July 1, 1981. In addition to the inspections for visible leaks, each pump must be inspected annually and each compressor must be inspected quarterly with a portable hydrocarbon detector. Any pump or compressor with a concentration greater than 10,000 ppm at the seal must be repaired. If a leaking pump or compressor has a spare, it must be shut down within two days; if it is not spared, repairs may be deferred until the next unit shutdown. A leak found by District personnel with a hydrocarbon detector must be repaired, but it is not a violation.

Table V

SCAQMD
Pump and Compressor Rule Summary

Applicability

- Pumps/compressors handling hydrocarbon gas or liquid with Reid vapor pressure >1.55 psia, except methane and ethane.

Requirements

Visible Leaks

- Maintain pumps/compressors so there is no visible vapor leakage or visible liquid leakage >3 drops/minute.
- Any visible leak greater than the above limits found by District personnel is a violation.
- Inspect pumps/compressors for visible leaks once/shift.

Invisible Leaks

- Inspect each pump annually and each compressor quarterly with portable detector. Repair any leak >10,000 ppm, measured 1 cm from seal.
- For unspared equipment, minimize leakage within one day and repair at next shutdown.
- For spared equipment, take it out of service within 48 hours and put spare in service. If the spare leaks, one pump must be repaired within 15 days.
- Repair requirements:

  1. Repair to <10,000 ppm, if possible.
  2. If, after repair, leak registers >75,000 ppm (10,000 ppm after July 1, 1982), then leak must be vented to pollution control device or variance obtained. Must be repaired or replaced at next shutdown.

Exemptions

- Pumps under 1 brake horsepower.
- Pumps/compressors with applicable hydrocarbon content <20%.
- Pumps with double seals.

The rule covering the annual inspections with a hydrocarbon detector uses a phased approach to allow industry time to attain compliance. Currently, the goal is to repair all leaks to below the 10,000 ppm threshold. Current mechanical seal repair practices are not sophisticated enough to ensure that all seals can be made to satisfy the 10,000 ppm limit. Thus, during the first year the rule is in place, leakage must only be reduced to 75,000 ppm. If the leakage exceeds 75,000 ppm, a variance must be obtained or the emissions vented to an air pollution control device. After the first year, the limit becomes 10,000 ppm instead of 75,000 ppm. The purpose of this two-step approach is to allow industry one year to gather data on seal reliability and repairability. If the data show that enough pumps cannot meet the 10,000 ppm leakage limit, then the rule may be modified.

Chevron is currently gathering data on the leak rates of the 513 pumps and 29 compressors subject to the current rule. These pumps and compressors are the second largest source of our refinery's fugitive emissions. Preliminary data indicate that about 20% of the pumps do not meet the 10,000 ppm limit. We are unable to predict at this time how many of these pumps can be made to satisfy the 10,000 ppm limit by repairing or replacing their seals.

The emission reductions due to the elimination of visible leaks have not yet been quantified. The annual inspection program with a leak detector is in its infancy, and changes are still being made to improve the effectiveness of the program. The limiting factor on the rate of which pumps and compressors can be inspected is the rate at which they can be repaired in the Machine Shop. Preliminary data indicate that about 100 of the affected pumps can be expected to leak, so an average of eight to nine pumps must be repaired every month. This could be as much as a 25% increase in the number of pump repairs previously required and is a significant increase in maintenance requirements. Whenever possible, the inspection program is scheduled so that any seal repairs can be done when a pump is sent to the shop for other maintenance.

A major concern is how to control emissions from old reciprocating compressors, many of which have been in service for more than 40 years. If the leakage cannot be reduced to less than 10,000 ppm, then the distance piece must be enclosed and vented to a closed system or the compressor must be replaced. Ultimately, several old compressors may have to be replaced since venting to a closed system is sometimes impractical.

One other feature of the refinery seal maintenance program is worth mentioning. There is one full-time mechanical seal technician whose job is to inspect and test every seal before it is installed. The technician replaces any defective parts or repairs a leaking new seal. Once a seal is installed, the technician retests the seal for leakage before the pump is reinstalled in the field. This approach greatly improves the quality control for mechanical seal repairs and replacements.

So far it has not been possible to calculate precisely the cost effectiveness for the seal I & M program. A very rough estimate of the cost effectiveness of the rule indicates that this rule costs $1-$2/lb of hydrocarbon emission reduced. This includes a credit of $0.10/lb for the recovered hydrocarbon. The pump and compressor rule is less cost effective than the valve and flange rule due to the high cost of replacing seals.

EFFECT ON MAJOR NEW PROJECTS

Fugitive hydrocarbon emissions are playing an increasingly significant role in obtaining construction permits for major new projects, especially in nonattainment areas for ozone. For some large construction projects, as many as a hundred separate permits may be required. However, the most critical permits are usually air permits.

In order to obtain an air permit to construct a new facility or modify an existing plant, the applicant first must supply a valid estimate of the emission rate of each pollutant from his new project. Since it can sometimes take several years from the inception of a project to get final permit approval, the permit application with emission estimates must be submitted as early as possible to avoid costly construction delays. The applicant usually must apply for permits long before detailed process designs are available, which puts a severe strain on the engineering staff to come up with valid equipment counts of fugitive sources (e.g., valves and pumps) before any detailed designs are complete. Here is where the applicant can draw from his past experience with I & M programs for similar plants to estimate the number of fugitive sources within the new project.

A quick guess of fugitive emissions is not acceptable. Care must be taken to develop an accurate estimate of emissions from a project because overestimating or underestimating can severely impact the permitting of a project. If the applicant underestimates the emissions from his project, this will reduce the project's predicted air quality impact; however, when the operator wants to start up his new plant, he may find that the permitting agency will only allow him to

operate a fraction of the pumps in the plant. Then the operator either has to delay startup until he can renegotiate a new permit or operate only a portion of the plant. If the applicant overestimates the emissions, this will overstate the project's impact; permit approval will be more difficult to obtain. For example, in nonattainment areas, the applicant would have to develop more emission offsets than necessary, since the emission increases from his project have been overestimated.

In permitting of new projects, the need for an early valid estimate of emissions is now obvious. Estimating pollutant emissions from point sources, such as furnace stacks, is relatively simple since this involves a straightforward engineering calculation. But predicting fugitive emissions is somewhat less accurate; however, the procedure is becoming more standardized as more data becomes available. The procedure for estimating fugitive emissions generally involves four basic steps as outlined below.

1. Obtain Design Data

This includes equipment counts (e.g., valves and pumps), cooling tower rate, waste water effluent rate, product loading rates, and tankage information. Equipment counts are usually the most difficult to predict. Since permitting requires such large lead times, final piping and instrumentation diagrams are usually not available for developing accurate equipment counts. The applicant has to estimate the equipment counts based upon actual equipment counts for similar existing process units or based upon the Radian report[1] which quotes average equipment counts for many typical process units from 13 U.S. refineries. It is advisable for the applicant to have his engineering staff review these equipment counts for reasonableness before the information is submitted to the permitting agency. Some agencies may require an adjustment in the permit after the new plant starts up based upon the I & M program for that new plant. Therefore, to avoid any surprises, such as being required to supply extra emission offsets after startup, the emission estimate in a permit application should be as accurate as possible.

2. Select Emission Factors

Emission factors are average measured emission rates per equipment unit. For example, the Radian report states the emission factor for light liquid valves is 0.024 lb/hr valve. Developing valid emission factors usually requires sampling very large populations of similar sources. It appears that the most widely accepted fugitive factors currently are those quoted in the Radian report[1].

3. Agree on Control Efficiency

Emission factors are usually quoted on an uncontrolled basis. The applicant and the permitting agency then have to agree on the control efficiencies to assume the specific types of control mechanisms. Permitting agencies usually have set standard control efficiencies for frequently used controls. It is advisable for the applicant to contact the permitting agency before submitting his application in order to resolve what control efficiencies to use and to avoid surprises later when the application is reviewed.

4. Calculate the Emission Rates

By the time the applicant gets to Step 4, about 90% of the work of estimating emissions is done. The actual calculation step is quite straightforward and easy. It simply involves multiplying together the numbers from Steps 1, 2, and 3. As an example, for emissions from light liquid valves in a typical hydrocracker, we have:

Equipment Units = 380 Light Liquid Valves (Basis: Radian Report)
Emission Factor = 0.024 Lb/Hr Valve (Basis: Radian Report)
Control Efficiency = 65% (Basis: El Segundo I & M Program)

Emission Rate = (Equipment Units)(Emission Factor)(1-Efficiency)

= (380 Valves)(0.024 Lb/Hr.Valve)(1-0.65)

= 3.2 Lb/Hr Hydrocarbon

The major problem in estimating fugitive emissions is not the final calculation step. The problem is almost always the first step where the applicant has to develop quite specific design data (e.g., valve counts) early in the project schedule when the overall scope of the project is usually preliminary and subject to change. Trying to determine exact equipment counts for a proposed project while still in the design phase is extremely difficult. But for the sake of permitting, specific numbers must be supplied; this is where experience with I & M programs for existing fugitive sources becomes a significant asset.

CONCLUSIONS

In summary, several years of experience with refinery fugitive emission rules support the following conclusions:

1. The data from the valve I & M program currently show a net economic return due to reduced stock losses when the Radian[1] emission factors are used. Decreasing the emission factors or increasing the inspection frequency would adversely affect the cost effectiveness. The flange I & M program has not yet been completely evaluated.

2. The I & M program for pumps and compressors is a relatively cost effective program from a regulatory agency's viewpoint. It is an expensive program to operate, but the cost effectiveness is better than most other hydrocarbon reduction strategies currently under consideration for petroleum refineries.

3. Future emission reduction rules will be more expensive to comply with, and the emission reductions will be smaller. Industry should participate in the regulatory development to make sure that the most cost-effective controls are used first. All sources, mobile and stationary, should be evaluated.

4. Estimating fugitive emissions is a critical part of obtaining construction permits for most new projects. Current I & M programs provide a valuable data base which helps to expedite the permitting process.

References

I. Mesich, Frank C., Radian Corporation, "Results of Measurement and Characterization of Atmospheric Emissions from Petroleum Refineries," presented at Symposium on Atmospheric Emissions from Petroleum Refineries (November 1979, Austin, Texas).

2. Tichenor, B. A., Hustvedt, K. C., Weber, R. C., U.S. Environmental Protection Agency, "Controlling Petroleum Refinery Fugitive Emissions Via Leak Detection and Repair," presented at Symposium on Atmospheric Emissions from Petroleum Refineries (November 1979, Austin, Texas).

:lkf,smm

Amoco Production Company
16825 Northchase Drive
Post Office Box 4381
Houston, Texas 77210

Robert E. Mahaffey
Manager, Plant Engineering and Construction (USA)

March 18, 1982

Emission Standards and Engineering Division (MD-13)
Environmental Protection Agency
Research Triangle Park, North Carolina 27711

Attention: Fred Porter

Re: Control Techniques Guideline Document
Equipment Leaks from Natural Gas/Gasoline Plants

File: LY-46-986.622

In accordance with the notice contained in the January 25, 1982 Federal Register, Amoco Production Company (USA) welcomes this opportunity to comment on the referenced document. Amoco Production Company (USA) is an oil and gas exploration and production company which operates 40 gas processing plants in the U.S.

The natural gas/gasoline plant industry has an interest in keeping fugitive emissions to a minimum. The economic value of the hydrocarbons and the conservation of a valuable natural resource as well as protection of the environment are all important considerations.

We feel the gas processing plants can maintain a low level of volatile organic emissions without the necessity of the detailed monitoring and record keeping proposed in the CTG document. A much more cost effective procedure could be based on ambient concentration monitoring at or near the plant boundary. Such a system would provide more continuous data of any releases that escape from the plant. If an abnormal concentration is detected, then a two step operation should be set in motion. First, the plant maintenance force would be notified and they would seek to reduce the concentration to normal levels. Second, on those occasions when the maintenance force was not immediately successful, a detailed monitoring program would begin.

There seems to be no standard concerning the sizes and configuration of the sampling probe for the monitoring instrument. The probe tip must of necessity be quite small in order to reach the less accessible points around small valves and flanges. This will likely make sampling less than precise and subject to varying dilution effects.

Comments for the specific paragraphs of the Guideline Document are attached hereto. If we can be of further assistance, please fee free to call on Dr. Lyman Yarborough at 713-931-2943.

R. E. Mahaffey

R. E. Mahaffey

LEP/pdh
221/Y

AMOCO PRODUCTION COMPANY (USA)

Comments Re: Control Techniques Guideline Document; Equipment Leaks from Natural Gas/Gasoline Processing Plant

The sketch shown in Fig. 2-1 indicates "methane to sales". It is felt that this is not meant to be compositionally specific since most sales streams also contain ethane and frequently smaller quantities of the heavier molecular weight hydrocarbon as well as some inerts; i.e., nitrogen and carbon dioxide.

Re: 3.1.2.2 Compressor
Page 3-3

Installation of the additional valves (checks and blocks) will be expensive and potentially require downtime for installation. Operation of the vent space at a pressure of 15 to 20 psig will not be possible without rather extensive modification of many machines. The distance piece enclosure of many machines will not stand 15 to 20 psig. The door seal may not be suitable for this type service. The pressure may force volumes of hydrocarbons into the compressor crankcase, ruining the lubricating oil, causing engine damage and significantly increasing the danger of a crankcase explosion. Compressor manufacturers could provide details about the requirements of the specific machines.

To permit operation of pressured distance pieces for most compressors would require reconstruction of the cylinder, new compressor rods repiping all the process gas side of the cylinder, and possibly modification of the compressor building floor and walls. This would be prohibitively expensive and would require significant downtime on each machine.

If vent lines are installed from compressors, the sizing should be increased to 1 1/2 or 2", at least for the headers, to reduce pressure buildup potential.

Re: 3.1.2.3 Relief Valves
Page 3-4

Many vessels have been installed without block valves to permit relief valve removal and removal of such valves may require large hydrocarbon emissions while depressing the vessel and/or its operating system and require expenditure of hundred of dollars per valve.

Many relief valves are installed in rather inaccessible locations. It would not be uncommon to require a crane be brought to the plant site to facilitate relief valve removal. In these cases, costs of thousands of dollars per valve can be expected.

Relief valves thus located will be difficult to monitor and checking at 1 to 3 years intervals (depending upon the service) is suggested.

The construction of relief valves (metal to metal seats) makes zero emission difficult, especially after the valve has operated one time. Testing a relief valve for leaks by use of a hydrocarbon detector may be unrealistic since even a minor leak into the relief valve stack may, over a period of time, displace all or part of the air and result in a high hydrocarbon indication, particularly if the hydrocarbon vapor is heavier than air.

3.1.3.3 Allowable Interval Before Repair
Page 3-8

The time interval for repair of a leak after its discovery is currently proposed to be 15 days. We suggest that the operator be permitted more flexibility in scheduling this work. As accepted practice, most operators will repair significant leaks as soon as practical after they are observed, without waiting for a specified monitoring period. The operator seeks to minimize leakage and prevent further damage to his equipment. However, there can be a need to order and receive maintenance supplies before proceeding. For minor problems, the 15 day figure can be reasonable but times of 60 days or even much longer times should be made acceptable. There are some repairs that cannot be made without a plant shutdown.

The calculation of 98% efficiency for a 15 day repair period seems to use 365 days (1 year) as a basis. This seems to imply one leak per year per piece of equipment, which is unrealistic. Static equipment, (flanges, valves) may be in operation for 10, 20, even 30 years without a failure or leakage of any kind.

3.2.2 - Open-Ended Lines -
Page 3-13

The CTG advocates plugging or capping flanging or valving all open ended lines. Many open-ended lines are vents installed for safety purposes. Capping or plugging those lines will result in added danger to personnel and equipment. Some of those lines might conceivably be routed to a flare system but others must be left free to prevent cross contamination or back pressure against a piece of equipment. The CTG recognizes that the caps or plugs cannot eliminate the emissions from the first valve, only that it's release is controlled. The technique then becomes of questionable value.

3.3 Other Control Strategies
Page 3-15

Section 3.3 recognizes that valves will have a much lower leak frequency than compressors, pumps, and relief valves and suggests

that quarterly inspections may not be necessary. This rationale is even more applicable to flanges and connections and the extension of time between inspections is most appropriate. Due to the low leak frequency of valves and connections, it is suggested that these items be removed from the monitoring program.

Tables 4-5 and 4-6 Energy Recovery Credits
Page 4-8 and 4-9

These tables allow recovery energy credits for all estimated emissions (100 per cent reduction) from open ended lines. This seems to be an error since Section 3.2.2 had recognized that much of this emission could not be stopped. In many other instances, the open ended vents would be routed to flare and energy recovery credits would not be applicable. This error is also reflected in the cost analysis of RACT (Section 5).

Section 5.0 Control Cost Analysis of RACT
Page 5-1

Many of the cost figures shown in this section appear understated and, in addition, the costs do not seem to allow anything other than ideal work conditions and new materials, i.e., no charges are shown for pipe support material. Costs at the smaller plants, especially where attendance is minimal, are likely to be much higher per unit of emission reduction. Such plants will be forced to call upon outside assistance.

Table 5.2 and 5.4 Labor Requirements
Page 5-5 and 5-8

These tables show zero labor time and cost for relief valve repair on the condition that these repairs would be done by routine maintenance. The repair of compressor and pump seals would also be done routinely as needed. It seems inconsistent to charge the emission reduction program with the cost associated with one repair and not another.

The monitoring times shown for valves seem inordinately low. Only 1 minute per valve is estimated. The instrument response time alone may be as long as 30 seconds. Sampling procedure specifies moving the Probe slowly along the interface periphery while observing the instrument readout. At the point of maximum readout, the Probe is held stationary for at least twice the instrument response time. Once this has been noted (record keeping is required) the operator procedes to the next valve. Considering all the calibration time, instrument warmup, care and maintenance of the instrument and associated gas supplies, as well as the testing procedure, the time required could easily be 5 minutes or more per test.
The tables of monitoring times and cost do not show sampling times for flanges and connections. There are generally a large number of these devices in the plants and by the very nature of

their construction, the test time per unit will be substantially greater than for a valve.

L. E. Petty
Room 579, Ext. 2941
GP III

LEP/pdh
221/Y

FLUOR ENGINEERS AND CONSTRUCTORS, INC.
SOUTHERN CALIFORNIA DIVISION
3333 MICHELSON DRIVE
IRVINE, CALIFORNIA 92730
TELEPHONE: (714) 975-2000
TELEX: 69-2486

March 22, 1982

Mr. Jack R. Farmer
Chief Chemicals and Petroleum Branch
Emissions Standards and Engineering Division
U.S. Environmental Protection Agency
Research Triangle Park, North Carolina 27711

Dear Sir:

We have reviewed the draft document "Control of Volatile Organic Compound Equipment Leaks From Natural Gas/Gasoline Processing Plants." We suggest that if EPA conducts periodic inspections of plants, only those facilities found not to be in reasonable compliance with guidelines be required to compile reports and be subjected to quarterly inspection. This practice will significantly reduce the burden of paperwork and costs to both industry and EPA and still achieve the same overall goal.

Thank you very much for the opportunity to comment on the draft guidelines.

Very truly yours,

William M. Hathaway

William M. Hathaway
Vice President, Process Engineering

S. Thomson

Sidney J. Thomson
Senior Manager, Environmental Engineering

WMH/SJT:nr

APPENDIX D
SUMMARY AND RESPONSES TO DRAFT CTG COMMENTS

APPENDIX D
SUMMARY AND RESPONSES TO DRAFT CTG COMMENTS

On January 25, 1982, the Environmental Protection Agency (EPA) announced the release of the draft control techniques guideline (CTG) document for control of volatile organic compound (VOC) emissions from equipment leaks in natural gas/gasoline processing plants (gas plants) in the Federal Register (47 FR 3403). Public comments were requested on the draft CTG and comments were received by industry representatives as listed in Table D-1. The comments that were submitted, along with response to these comments, are summarized in this appendix. This summary of comments and responses serves as the basis for revisions made to the draft CTG.

D.1 GENERAL

Comment:

One commenter (5) requested that the comment period be extended to give industry more time to further analyze these complex regulations.

Response:

The CTG incorporates public comments from the preliminary draft CTG (March 1981) presented to the National Air Pollution Control Techniques Advisory Committee (NAPCTAC) in April 1981 and comments received on the draft CTG (December 1981) that was announced in the Federal Register January 25, 1982 (47 FR 3403). Comments were also received at the NAPCTAC meeting (July 1982) for the gas plants NSPS and these have also been addressed in the CTG as applicable. EPA has been working with industry since the inception of the gas plants NSPS/CTG projects in December of 1979. Therefore, there has been ample time for public comment.

D.2 NEED FOR CTG

Comment:

One commenter (8) questions in general, the need for the standard stating that EPA has failed to demonstrate the effectiveness of the control measures proposed and has misrepresented the costs and cost effectiveness.

Response:

National Ambient Air Quality Standards (NAAQS) (Section 109 of the Clean Air Act) set a ceiling for public exposure to criteria pollutants by establishing an ambient concentration level that must not be exceeded anywhere in the United States. This control techniques guidelines document will provide guidance to States and air pollution control agencies for RACT-based provisions applicable to gas plant facilities to reduce significantly volatile organic compound emissions to achieve and maintain NAAQS for ozone. The CTG environmental and cost impacts are based upon actual field studies in gas plants and on comments received on the draft CTG and on similar fugitive VOC control projects. Specific comments on the controls, costs, and cost effectiveness of RACT are addressed in the following sections.

Comment:

Another commenter (9) wrote that leak prevention and control procedures are already in place at most natural gas plants in compliance with minimum federal safety standards. Proposed requirements are repetitious and burdensome.

Response:

The commenter is apparently referring to occupational safety requirements which have different purposes and may result in different environmental benefits. Present industry practices (e.g., enclosing compressor distance pieces and venting emissions outside of a compressor house) may reduce occupational exposures, but they do not necessarily reduce the mass emissions to the atmosphere. The data base upon which these recommendations are made is from plants in compliance with existing rules. These data show gas plants have significant emissions and that cost-effective controls will reduce these emissions.

D.3 APPLICABILITY

Comment:

One commenter (3) argued that small plants (10 vessels or fewer) should be exempt from RACT based on cost effectiveness (benefits don't outweigh costs per Executive Order 12291).

Response:

In Section 4.1 a small plant cutoff is recommended based on cost effectiveness of RACT. Small plants may need to rely upon outside personnel to perform the leak detection and repair program and, hence, may incur higher costs per unit of emission reduction to implement RACT than large gas plants. Section 3.4.2 provides the basis for the small plant cut-off.

Comment:

Another commenter (8) wrote that components with less than 10 percent VOC by weight should be excluded.

Response:

Based on API testing, sources with less than 10 percent VOC have significant emissions, therefore, EPA has not exempted these sources. However, it seems reasonable that at some low percentage of VOC, sources would have very limited VOC emission reduction potential. Therefore, dry gas equipment (less than 1 weight percent VOC) are exempt from RACT as described in Section 4.1

Comment:

A commenter (4) noted that the liquid and gas processes performed at underground gas storage facilities are few and simple and, therefore, should be excluded from the definition of a natural gas/gasoline storage operation. Since there is no potential for leakage from components operating at negative pressure, another commenter (8) requested that these components be exempt from the CTG.

Response:

EPA concurs with the comments, therefore, the description of RACT in Section 4.1 exempts equipment at underground storage facilities and equipment which operate under vacuum service.

D.4 CONTROL TECHNOLOGY

D.4.1 Compressors

Comment:

One commenter (8) wrote that reducing VOC emissions from compressors below 10,000 ppmv is difficult and impractical.

Response:

EPA recognizes that compressor repair to achieve organics concentrations below 10,000 ppmv may be difficult and impractical for reciprocating compressors with packed seals. Therefore, alternative RACT impacts are based on compressor seal vent control systems. Nevertheless, leak detection and repair would be required (unless a vent control system is installed) in those instances where repair can achieve VOC emission concentrations below 10,000 ppmv. Centrifugal compressors may operate in tandem, one in service while the other serves as a spare. In such instances seal repair may be performed without need for a process unit shutdown.

Comment:

Several commenters (2,6,8,10,11) remarked that many compressors are not designed to operate with back pressure against the distance piece; enclosing and venting emissions from compressor seals and the distance piece poses mechanical and safety problems. The enclosed VOC air mixture could reach explosive limits. Enclosing compressors would require extensive modification which would be expensive and require significant downtime.

Response:

Many compressors are equipped with enclosed distance pieces. Enclosed distance piece emissions are generally vented outside of compressor houses; however, these emissions can be safely vented to a VOC control device (e.g. flare). EPA has reconsidered the safety and cost aspects of venting compressor distance piece emissions. The Chapter 5 cost analysis has been revised to include necessary safety equipment for a compressor distance piece purge system. However, if plant owners/operators can demonstrate that enclosing and venting emissions from distance pieces and seal packing vents is either unsafe or requires unreasonable cost such as replacement of the compressor,

these compressors may be exempt from RACT. Most compressor seal packing vents can be vented to a VOC control device.

Comment:

Another commenter (10) stated that since compressor emissions represent only 3 percent of total gas plant emissions, they should not be covered.

Response:

The gas plant compressor seal emission factors used in the draft CTG are based on emission measurements from open reciprocating compressor distance pieces and does not include seal vent emissions or measurement of emissions from distance pieces that are enclosed and vented outside of a compressor house to atmosphere. The data base also includes dry gas compressors, which are exempt from RACT requirements. The gas plants compressor seal emission factors have, therefore, been revised.[1] Using the revised emission factors in the model plants (see Table 2.2), compressor seals contribute approximately 14 percent of total emissions.

For the actual equipment counts found during API and EPA testing, compressor VOC emissions ranged from 0-42 percent and averaged 13 percent.[2] Therefore, compressor emissions are significant and emission control is considered.

D.4.2 Leak Detection and Repair Methods

Comment:

Two commenters (8 and 10) wrote that isolating a pump and purging before repair (repacking or seal replacement) is not practical. Flushing fluid disposal is a problem. Another commenter (9) further questioned whether emissions resulting from pump repair might offset long-term benefits, depending on the extent of the original leak. Another commenter (5) noted that the venting of gas during repair of fugitive emission sources is not included in emissions estimates or in computing recovery credits.

Response:

Process industry pumps are now routinely isolated and purged prior to repair. Flushing fluid is routed to the oily storm sewer for treatment and disposal. This fluid is expected to be a small percentage of total plant waste. RACT does not mandate purging pumps prior to repair although a pump would normally be emptied prior to repair.

Even if the pump were not purged and all process fluid in a pump were allowed to evaporate to atmosphere as a result of pump repair, these emissions are approximately equivalent to the mass emissions released to atmosphere by a leaking pump over a 3-day period, 9 kg. This would not offset the long-term benefits of RACT.

The final comment is based on RACT requiring shutdown and purge for repair of leaking equipment. The draft CTG included a provision that required repair of all leaks within one year of detection. RACT has been revised such that repairs requiring a unit shutdown may be delayed until the next scheduled shutdown. As such, RACT no longer requires yearly turnaround for repair of these equipment leaks. However, as discussed in Section 3.4.3, a State agency might wish to consider a provision in its regulation which would allow the Agency director to order an early unit shutdown for repair of leaking components in cases where the percentage of leaking components awaiting repair at unit turnaround becomes excessive.

Comment:

Commenters (3 and 9) stated that facilities already have portable monitoring instruments (for safety purposes) that are effective and less costly than the recommended monitors. Facilities should be allowed to use their own monitors. The recommended monitors are temperamental, sensitive to heat, humidity, and type of gas sampled, and their required use can place a financial burden on small facilities.

Response:

Facilities may use any instrument as long as it satisfies the requirements specified in Reference Method 21. EPA recognizes that monitoring instruments will require periodic maintenance and has accounted for instrument maintenance in the annual cost of implementing the leak detection and repair program, including the cost of a spare instrument. Nevertheless, EPA agrees that small facilities (plants with few equipment pieces) may incur higher costs per emission reduction and, therefore, as noted in Section 4.1 and D.3, small plants are exempted from RACT.

Comment:

One commenter (8) wrote that soap scoring should be allowed as a VOC detection method.

Response:

Soaping is permitted as a preliminary screening technique on certain equipment pieces as discussed in Section 3.1.1.

Comment:

Several comments (6, 8, 10 and 11) were received stating that EPA should extend the 15-day repair interval. One commenter suggested that repair should be completed during the next regular maintenance period, while others suggested repair within 30 days and 60 days for repairs that require hard to get parts.

Response:

The 15-day repair interval was selected for RACT because it allows operators sufficient time to accomplish repairs while achieving effective emission reduction. Most repairs can be completed quickly, while a few may take up to 15 days. Repair intervals beyond 15 days reduce the effectiveness of emission reductions and do not substantially improve the efficiency in handling complex repair tasks. If repair is not technically feasible without shutting down the process unit, repair may be delayed until the equipment can be isolated for repair or during the next scheduled process unit turnaround.

Comment:

Another commenter (10) stated that unsafe and difficult-to-monitor components should be considered.

Response:

Guidelines are included in the CTG for less frequent monitoring of equipment pieces that are difficult-to-monitor. Guidelines, however, do not address unsafe components because such equipment components are not found in gas plants.

Comment:

Two commenters (8 and 10) wrote that EPA should consider annual inspections because existing data (Eaton, 1980) dispute quarterly monitoring for all valves, pumps, and relief valves. Quarterly inspections are practical only for a relatively small number of major components (e.g. compressors).

Response:

EPA data and models presented in the EPA report, "Fugitive Emission Sources of Organic Compounds -- Additional Information on Emissions,

Emission Reductions, and Costs", EPA 450/3-82-010, April 1982, (AID), show quarterly monitoring to be reasonable as discussed in Chapter 5. The Eaton data, as discussed in Appendix A, support the data used in the analyses.[3]

Comment:

For the "skip-period" monitoring alternative work practice for valves, one commenter (10) suggested that EPA should allow less frequent than annual inspections for valves if data indicate that a longer interval would keep the leak rate less than 2 percent. This concept should apply to other fittings as well as valves.

Response:

In developing skip-period monitoring, EPA did not consider inspection intervals longer than one year. In skip-lot sampling theory it is assumed that failures do not accumulate with time. For skip period monitoring, it is likely that leaks that occur will not be detected and will accumulate. EPA does not feel it is reasonable to allow leaks to accumulate for greater than one year.[4] Facilities with very low leak percentages may, however, elect to comply with the allowable percent leaking alternative.

"Skip" monitoring is not allowed for other sources because there are not enough other sources present for the statistics of skip monitoring to apply. In addition, leaks from these other sources are not as predictable as leaks from valves. Valves develop leaks slowly over time with small percent increases over a given time interval, whereas other sources might operate with low leak rates for long periods of time and then fail instantaneously with sudden increases in leak rates. Consequently, no matter how many consecutive successful inspections are performed, there is little assurance that a low leak rate would continue if skipping were allowed.

Comment:

The same commenter (10) also questioned emissions reduction estimates stating that 100 percent emission reduction (Table 4-2) for compressor controls is not realistic. Chevron's leak detection and repair program of quarterly inspections reduces emissions by 35 percent.

Response:

The assumption that compressor controls reduce emissions by 100 percent is based on enclosing compressors and venting emissions to a control device rather than on leak detection and repair programs. EPA has recalculated the impacts of RACT based on quarterly leak detection and repair (assuming gas plants can use leak detection and repair) and determined an emission reduction of 83 percent. EPA maintains that enclosing and venting seal emissions to a control device will result in essentially 100 percent control.

Comment:

Another commenter (11) remarked that achieving zero emissions from relief valves is difficult due to the metal-to-metal seat construction. Testing relief valves for leaks by using hydrocarbon detectors may be unrealistic because even minor leakage into the relief valve stack might give a high hydrocarbon reading, particularly if the hydrocarbon vapor is heavier than air.

Response:

RACT for safety relief valves does not require zero emissions as the commenter implied. Rather, quarterly leak detection and repair is required which results in approximately a 63 percent VOC (69 percent THC) emission reduction efficiency. Also, relief valves may be designed to utilize an elastomeric O-ring seat as a backup to the conventional metal-to-metal seat while any leakage is controlled by the elastomeric O-ring seat. Relief valves with O-ring seats have been tested and found to be bubble tight up to over 95 percent of set pressure and to reseat to this condition through several cycles. Finally, Method 21 specifies that relief valves be monitored at (and not in) the relief valve opening (horn), so minor leakage should not be detected.

Comment:

One commenter (6) noted that pressure relief valves can be vented to a plant flare where VOC would be combusted.

Response:

A flare or other VOC control device (i.e., process heater, carbon adsorption unit, refrigeration unit, gas recovery compressors) can be used to effectively control relief valve leakage and are allowed under RACT.

Comment:

One commenter (11) expressed concern that the removal of pressure relief valves may result in large emissions from depressurizing vessels at a cost of hundreds of dollars per valve (thousands of dollars per inaccessible valve).

Response:

Three-way valves or block valves may already be in place to isolate pressure relief valves for repair on-line without depressuring the unit. If so, repair within 15 days should be accomplished. However, if pressure relief devices cannot be isolated for repair on line, repair can be delayed until the next process unit turnaround.

D.4.3 Technology Transfer

Comment:

One commenter (7) wrote that there is no technical basis for the transferability of chemical plant or refinery VOC emissions data to natural gas plants because the processes, feedstocks, operating temperature, operating pressures, vibrational problems and product compositions are different; EPA should address these differences and give supporting data for technology transfer.

Response:

EPA recognizes that differences exist between chemical and refinery process units and gas plants; however, these differences do not preclude the transfer of control technology to the gas processing industry. In testing conducted in ethylene plants, process conditions approximate that of equipment pieces in cryogenic units of gas plants. In addition, only a small proportion of gas plant equipment are subject to conditions which are unlike that of chemical or refinery process units. Finally, the parameters addressed by the commenter either do not affect the frequency of emissions or are unquantifiable. In API testing of the natural gas production industry, the process type, operating temperature and pressure, and line size were determined to be unrelated to equipment leaks early in the testing program; therefore, the recording of these data was discontinued. Feedstocks and product chemical types have been found to be important only in terms of vapor pressure; as a result, heavy liquids have been exempt from routine monitoring. Vibrational problems and other site-specific differences are unquantifiable.

D.4.4 Gas Operated Control Valves

Comment:

One commenter (10) stated that there are no emission factors given for gas operated control valves nor indication of how many are used. There are very little nonmethane/nonethane hydrocarbons present in gas operated control valves. Similarly, another commenter (9) argued that because many remote natural gas gathering stations use gas operated control valves, compressed air is not acceptable RACT.

Response:

Gas operated control valves normally use air. In those instances in which gas is used to operate control valves, dry gas (methane and ethane) is normally used. Since RACT exempts dry gas service equipment, the recommendation for controlling gas operated control valves is deleted from RACT. Further, the RACT recommendations are for gas plants and not for natural gas gathering stations.

D.5 MODEL PLANTS

Comment:

Two commenters (8 and 10) questioned the model plants. One remarked that EPA should have included all four of the EPA-tested gas plants, or EPA should explain the reason for including only two of the plants in the vessel and component inventories. In addition, the component inventories at the two API-tested plants are unusually large and of questionable value in developing model plant configurations. Another wrote that the method of ratioing components to all vessels combined (columns, heat exchangers, drum/tanks) is an oversimplification, as indicated by Table B-3 of the draft CTG.

Response:

The model plants are based on four rather than on six plant visits because the last two EPA-tested plants were visited after the model plants were derived. Furthermore, as stated in Appendix B, the latter two plant visits did not obtain information on vessel or equipment inventories. The purpose of model plants is to characterize the range of processing complexity. The diversity within the gas production industry is represented in the four gas plants were examined and is shown in the three model plants selected. In addition, the cost effectiveness of

RACT controls are independent of the number of pieces of equipment because there are no economies of scale for leak detection and repair programs.

D.6 ENVIRONMENTAL IMPACT

Comment:

Two commenters (2 and 6) maintained that the test data base on which emission reduction estimates are based is limited (only 6 plants). They contended that the test data are not statistically sound and should be expanded to obtain a more representative sample.

Response:

Emissions test data are used to estimate the magnitude of fugitive emissions and the magnitude of potential emission reductions through the application of reasonably available control techniques. For this purpose, the emissions test data obtained from gas plants indicate that significant emissions are released to atmosphere from leaking equipment and that implementation of the RACT requirements will reduce these emissions.

Comment:

Two commenters (5 and 6) noted that other factors should be considered (besides the number of components) in estimating emissions (e.g., system pressure, equipment age, climate, past performance, gas composition, differences in plant type, size, total fluid mix, etc.)

Response:

EPA has conducted numerous equipment emissions studies at petroleum refineries, synthetic organic chemical manufacturing plants , gas plants, coke oven by-product plants, etc., as discussed in detail in "Fugitive Emission Sources of Organic Compounds--Additional Information on Emissions, Emission Reductions, and Costs." U.S. Environmental Protection Agency, Research Triangle Park. EPA-450/3-82-010. April 1982. The major conclusions drawn from these studies are that the only equipment or process variable found to correlate with fugitive emissions was the volatility and/or phase of the process stream. Consistent with to this finding, RACT for gas plants exempts equipment that contact or contain heavy liquid VOC. Other variables such as line temperature and pressure indicated much lower degrees of correlation.

Comments:

Another commenter (6) wrote that the method for obtaining emission rates needs to be described in more detail. The commenter specifically questioned how EPA derives emission factors from concentrations measured by a hydrocarbon analyzer without measuring actual flow rate.

Response:

Equipment emission rates were determined by enclosing the emission sources and measuring mass emissions. The screening values, simultaneously measured, were correlated to the measured leak rate. The derivation of emission factors is presented in "On-shore Production of Crude Oil and Natural Gas-Fugitive Volatile Organic Compound Emission Sources-Data Analysis Report Frequency of Leak Occurrence and Emission Factors for Natural Gas Liquid Plants," U.S. Environmental Protection Agency, Research Triangle Park, N.C. EMB Report No. 80-FOL-1. July 1982. The emission factor development methodology was reviewed by industry representatives and they determined that EPA's methods for emission factor development were appropriate.[5]

Comment:

One comment was received (11) stating that it is wrong to assume that 100 percent of emissions would be reduced by controls on open-ended lines. In many cases, open-ended vents would be routed to a flare, and energy recovery credits would not be applicable.

Response:

Capping an open-ended line limits emissions to the amount of VOC trapped between the valve and cap (whether it be a plug, second valve, etc.) which is released when the line is again opened. However, by closing the first valve prior to capping or closing the second valve, the safety of the technique is ensured and emissions minimized. A conservative estimate of the amount of VOC trapped in the line and the frequency of open-ended line use, nevertheless, results in almost 100 percent VOC control (as discussed in Section 3.2.2). RACT for open-ended lines effectively controls emissions between each time the line is used.

It appears as though the commenter has incorrectly assumed that process vents would need to be capped. Any open-ended line that is in use, a pressure relief valve, a double block and bleed line, or a process vent, would not be capped. Process vents could be routed to a flare, with no recovery credit as the commenter states, but this is not part of the requirements of RACT.

D.7 COST IMPACTS

Comment:

Commenters (1 and 8) wrote that front end costs of RACT should not be combined with capital costs. For example, double valving open-ended lines and initial leak repair are front end expenses that should be considered as operating costs, and not capital costs to be amortized (and thus minimizing the impact of their expense in the year when they are incurred).

Response:

Although the control cost of open-ended lines and initial leak repair could be treated as operating expenses because they are one-time start-up costs, for the purposes of this CTG they are treated as though they were capital costs and amortized. This assumes capital would be borrowed to pay these initial costs.

Comment:

Two commenters (8 and 10) remarked that estimates for monitoring times do not apply to gas plants and the costs are outdated. Monitoring labor charges of $4/source for contractor labor and $3.50/source for plant personnel (not including leak repair, resampling after repair, or initial design, acquisition, or implementation of the monitoring network), as well as the current labor rate of $23/hr (as opposed to EPA estimate of $18/hr) were offered. It was also argued that labor costs for leak detection should include: front end set-up cost, equipment depreciation, and instrument maintenance. In addition, the costs apply to ideal work conditions and new materials, and the costs at smaller plants will be much higher per emission reduction because they would have minimal attendance and would be forced to call upon outside assistance in implementing RACT.

Response:

The monitoring time estimates for plant equipment are based on the results of refinery inspections and have been corroborated in chemical plant testing. The EPA labor rate ($18/hr) is based on June 1980 dollars. Updating the EPA estimate to present (June 1982) dollars results in a labor rate that exceeds the rate suggested ($18 x June 1982 Cost Index 295.9/June 1980 Cost Index 210.5 = $26. Reference: Chemical Engineering 87(20):7 and 89(19):7). Set-up costs, equipment depreciation, and instrument maintenance costs are included in the cost analysis. Leak detection costs account for field labor time only. Administrative, support, and instrument costs to implement RACT are itemized separately. The leak detection and repair costs are based on field monitoring under all weather conditions. For model plant B, EPA's estimated costs fall within the range of costs the commenter quotes. With 750 valves maintained at 2-man-minutes per inspection and one fourth the annual instrument cost of $5,500, the cost per valve inspection is $2.67. Using the above cost indices this would update to $3.75 per source.

The EPA agrees, however, that small plants may incur higher costs per emission reduction if outside personnel are relied upon to conduct the leak detection and repair program. Chapter 4, therefore, recommends a small plant exemption from RACT (Section 4.1).

Comment:

One commenter (8) wrote that the costs for adding double valves on open-ended lines are underestimated because these costs should include: recordkeeping, vehicle use, and source identification and tagging. In addition the commenter wrote that the cost estimate for capping open-ended lines is based on the price of a one-inch screw-on type globe valve and the incorrect assumption that any lines larger than one inch can be reduced to one inch. The commenter suggested that EPA should review the 721 open-ended lines tested as reported in the CTG-Appendix A and base the costs on a distribution of line sizes.

Response:

Double valving an open-ended line does not require additional recordkeeping or tagging. The second valve is not subject to the

valve leak detection and repair requirements, but is considered as RACT. Complying with RACT, however, does not necessitate a second valve. Open-ended lines may be capped or plugged. The basis for the cost estimate is the price of a one-inch screw-on type globe valve which reflects the maximum cost likely incurred for open-ended line emissions control. Larger lines would likely have a blind flange installed at a similar cost, and smaller lines would be capped at a much lower cost.

Comment:

Similarly, the same commenter (8) stated that leak repair costs are too low. Costs should include: recordkeeping, vehicle use, provisions for inaccessibility, repair parts, loss of production and overtime. Cost of $120/repaired valve and $1000/repaired pump are realistic repair costs.

Response:

In Chapter 5, a $140/seal replacement cost is included in the cost of pump repair. The cost analysis also includes annual miscellaneous (0.04 x capital cost) and maintenance (0.05 x capital cost) costs plus an annual calibration and maintenance cost for the monitoring equipment of $3000 (1980 dollars). Administrative and support costs to implement RACT (0.40 x monitoring labor + maintenance labor) are also included. Very few valves will require repacking. Chapter 4 includes provisions for less frequent monitoring of difficult to monitor valves and repairs that cannot be completed on-line. These repairs may be delayed until the next scheduled shutdown.

Comment:

One respondent (11) remarked that monitoring time and costs are not included for flanges and connections.

Response:

Flanges and connections need not be monitored routinely under RACT. Therefore, there are no monitoring time or costs associated with it.

Comment:

One commenter (10) was concerned that RACT compressor control costs are too high in consideration of their small proportion to total emissions. The venting system would require extra valves for safety.

The entire costs for the control system will exceed $700, and the cost of a small flare is about $8000.

Response:

Section 5.5 presents revised control costs for controlling compressors based on public comments received on the enclosed compressor vent system. The cost effectiveness for the enclosed compressor vent control system also reflects revised emission factors for compressor seals. The revised compressor and emission factors are based on wet gas and natural gas liquids compressors.[1] Data from dry gas service compressors was excluded because dry gas service components are exempt from RACT. Based on the revised cost effectiveness of enclosing compressors, wet gas reciprocating compressors at facilities that do not have a VOC control device are exempt from RACT.

Comment:

Similarly, another commenter (9) expressed concern that the cost of a VOC monitoring instrument, its maintenance, and calibration are high compared to current practices of leak detection.

Response:

The draft CTG has included the cost of two monitoring instruments, instrument maintenance calibration time, and two-man monitoring teams to obtain maximum cost impacts from implementation of RACT. In Chapter 5, the costs of RACT including the maximum instrument costs are shown to be reasonable. Actual plant costs incurred may be much less because one man monitoring teams may be employed and less expensive monitoring instruments may be purchased. Also, many equipment pieces will not require instrument monitoring if soaping is used as a preliminary screening technique.

Comment:

One commenter (8) pointed out that the value of recovery credits for VOC ($210/Mg) is incorrectly based on the assumption that all the VOC is propane. Also, the value of the recovery credits is $146 if the correct product density for propane is used.

Response:

Recovery credits have been revised. Nonmethane/nonethane hydrocarbons are valued at $192/Mg based on LPG price of 40¢/gallon for June 1980

and a specific gravity of 0.55 (the original incorrect credit of $210/Mg was based on a specific gravity of 0.50). Methane and ethane are valued at $61/Mg based on $1.46/Mcf of natural gas for June 1980, assuming a weight equivalent composition of 80 percent methane and 20 percent ethane at standard temperature and pressure.

Comment:

One commenter (10) stated that more frequent inspections than annual are not cost effective.

Response:

EPA has determined that quarterly leak detection and repair is cost effective and represents reasonably available control technology. In Chapter 5, Table 5-10 presents the cost effectiveness of quarterly leak detection and repair for valves, pumps, relief valves, and compressors.

Comment:

One commenter (10) wrote that incremental cost-effectiveness figures should be calculated for different inspection intervals.

Response:

The purpose of control technique guidelines (CTG) is to inform air pollution control agencies responsible for achieving and maintaining national ambient air quality standards of reasonably available control technology (RACT). These agencies may formulate their own regulations based upon the CTG; however, the CTG itself is not intended to evaluate alternative control strategies and the incremental cost effectiveness between the alternatives.

D.8 References

1. Memorandum. K.C. Hustvedt EPA:CPB to James F. Durham, Revised Gas Plant Compressor Seal Emission Factor. February 10, 1983.

2. Memorandum, Kent C. Hustvedt CPB:EPA to James F. Durham, CPB:EPA, Estimated Compressor Seal VOC Emissions Contribution for API and EPA Tested Gas Plants. March 22, 1983.

3. Memorandum, K.C. Hustvedt, EPA:CPB, to J.F. Durham EPA:CPB, API/Rockwell Maintenance Data. December 9, 1982.

4. Memorandum, Kent C. Hustvedt CPB:EPA to James F. Durham CPB:EPA Skip Monitoring for Fugitive Emission Sources. December 14, 1981.

5. Letter with attachment from D.A. DuBose, Radian Corporation, to W.E. Kelly, EMB:EPA, July 22, 1982 - attachments are Radian and TRW report, of the January 28, 1982 meeting with API on gas plant emission factors.

TECHNICAL REPORT DATA
(Please read Instructions on the reverse before completing)

1. REPORT NO. EPA-450/ 3-83-007	2.	3. RECIPIENT'S ACCESSION NO.
4. TITLE AND SUBTITLE Control of Volatile Organic Compound Equipment Leaks from Natural Gas/Gasoline Processing Plants-Guideline Series		5. REPORT DATE December 1983
		6. PERFORMING ORGANIZATION CODE
7. AUTHOR(S)		8. PERFORMING ORGANIZATION REPORT NO.
9. PERFORMING ORGANIZATION NAME AND ADDRESS Office of Air Quality Planning and Standards Environmental Protection Agency Research Triangle Park, North Carolina 27711		10. PROGRAM ELEMENT NO.
		11. CONTRACT/GRANT NO. 68-02-3511
12. SPONSORING AGENCY NAME AND ADDRESS Director of Air Quality Planning and Standards Office of Air Quality Planning and Standards U.S. Environmental Protection Agency Research Triangle Park, North Carolina 27711		13. TYPE OF REPORT AND PERIOD COVERED
		14. SPONSORING AGENCY CODE EPA/200/04
15. SUPPLEMENTARY NOTES		

16. ABSTRACT

Control Technique Guidelines (CTG) are issued for volatile organic compound (VOC) equipment leaks from natural gas/gasoline processing plants to inform Regional, State, and local air pollution control agencies of reasonably available control technology (RACT) for development of regulations necessary to attain the national ambient air quality standard for ozone. This document contains information on RACT environmental and cost impacts.

17. KEY WORDS AND DOCUMENT ANALYSIS

a. DESCRIPTORS	b. IDENTIFIERS/OPEN ENDED TERMS	c. COSATI Field/Group
Air Pollution Gas/gasoline Processing Plants Pollution Control Reasonably Available Control Technology Volatile Organic Compounds (VOC)	Air Pollution Control	13b

18. DISTRIBUTION STATEMENT Unlimited	19. SECURITY CLASS *(This Report)* Unclassified	21. NO. OF PAGES 173
	20. SECURITY CLASS *(This page)* Unclassified	22. PRICE

EPA Form 2220-1 (Rev. 4-77) PREVIOUS EDITION IS OBSOLETE