EPA 440/1-76/060b
Group II
Keep Paper Copy

Development Document for Interim Final Effluent Limitations, Guidelines and Proposed New Source Performance Standards for the

Gum and Wood Chemicals Manufacturing

Point Source Category

UNITED STATES ENVIRONMENTAL PROTECTION AGENCY

APRIL 1976

DEVELOPMENT DOCUMENT
for
INTERIM FINAL
EFFLUENT LIMITATIONS, GUIDELINES
AND PROPOSED NEW SOURCE PERFORMANCE STANDARDS

for the

GUM AND WOOD CHEMICALS MANUFACTURING
POINT SOURCE CATEGORY

Russell E. Train
Administrator

Andrew W. Breidenbach, Ph.D.
Assistant Administrator
for Water and Hazardous Materials

Eckardt C. Beck
Deputy Assistant Administrator for
Water Planning and Standards

Ernst P. Hall, P.E.
Acting Director, Effluent Guidelines Division

Joseph S. Vitalis
Project Officer
and
George M. Jett
Assistant Project Officer

April 1976

Effluent Guidelines Division
Office of Water and Hazardous Materials
U.S. Environmental Protection Agency
Washington, D.C. 20460

Environmental Protection Agency
Region V, Library
230 South Dearborn Street
Chicago, Illinois 60604

ENVIRONMENTAL PROTECTION AGENCY

ABSTRACT

This document presents the findings of a study of the gum and wood chemicals manufacturing point source category for the purpose of developing effluent limitations and guidelines for existing point sources and standards of performance and pretreatment standards for new and existing sources, to implement Sections 301(b), 301(c), 304(b), 304(c), 306(b), 306(c), 307(b) and 307(c) of the Federal Water Pollution Control Act, as amended (33 U.S.C. 1251, 1311, 1314(b) and (c), 1316(b) and 1317(b) and (c), 86 Stat. 816 et. seq. P.L. 92-500) (the "Act").

The development of data and recommendations in this document relates to the gum and wood chemicals manufacturing point source category, which is one of the eight industrial segments of the miscellaneous chemicals manufacturing point source category which was originally published in February, 1975. The gum and wood chemicals manufacturing point source category is divided into six subcategories on the basis of the characteristics of the manufacturing processes involved. Separate effluent limitations were developed for each subcategory on the basis of the level of raw waste load, raw materials and the degree of treatment achievable. Appropriate technology to achieve these limitations include biological and physical/chemical treatment systems and systems for reduction in pollutant loads. Various combinations of in-plant and end-of-pipe technologies are also considered.

Supporting data and rationale for development of the proposed effluent limitations, guidelines and standards of performance are contained in this report.

TABLE OF CONTENTS

Section	Title	Page
	Abstract	
	Table of Contents	
	List of Figures	
	List of Tables	
I	Conclusions	1
II	Recommendations	7
III	Introduction	13
IV	Industrial Categorization	25
V	Waste Characterization	51
VI	Selection of Pollutant Parameters	59
VII	Control and Treatment Technologies	81
VIII	Cost, Energy, and Nonwater Quality Aspects	93
IX	Best Practicable Control Technology Currently Available (BPT)	115
X	Best Available Technology Economically Achievable (BAT)	121
XI	New Source Performance Standards (NSPS)	125
XII	Pretreatment Standards	127
XIII	Performance Factors for Treatment Plant Operations	131
XIV	Acknowledgements	135
XV	Bibliography	139
XVI	Glossary	151
XVII	Abbreviations and Symbols	183

LIST OF FIGURES

Number	Title	Page
III-1	Interrelationships of Present Gum and Wood Chemicals Manufacturing	22
IV-a	Charcoal Briquet Plants Map	28
IV-1	Char and Charcoal Briquet Manufacturing	35
IV-2	Gum Rosin and Turpentine Production	38
IV-3	Wood Rosin, Pine Oil, and Turpentine Production via Solvent Extraction	40
IV-4	Crude Tall Oil Fractionation and Refining	42
IV-5	Distillation and Refining of Essential Oil	44
IV-6	Rosin Derivatives Manufacture	46
VIII-1	BPCTCA Cost Model for Subcategories C and D	97
VIII-1A	BPCTCA Cost Model, Subcategories B, E and F	98
VIII-2	BATEA Cost Model for Subcategories C and D	100
VIII-2A	BATEA Cost Model, Subcategories B, E and F	101
VIII-3	BADCT Cost Model	103

LIST OF TABLES

Number	Title	Page
I-1	Summary Table	3
II-1	BPCTCA Effluent Limitations Guidelines	8
II-2	BATEA Effluent Limitations Guidelines	9
II-3	BADCT Effluent Limitations Guidelines	10
III-1	Production and Product Value	21
IV-1	Statistics by Geographical Areas	29
IV-2	Comparison of Raw Waste Loads by Product Grouping	31
IV-3	Factors Considered for Basis of Gum and Wood Chemicals Segment Sub-categorization	33
V-1	BPCTCA Raw Waste Loads	52
V-2	Miscellaneous Raw Waste Load Data	56
VI-1	List of Parameters Examined	61
VII-1	Treatment Technology Survey	83
VII-2	Treatment Plant Survey	84
VII-3	Historic Treatment Plant Performance	85
VII-4	Summary of COD Carbon Isotherm Data	89
VIII-1	BPCTCA Treatment System Design Summary	104
VIII-2	BATEA End-of-Pipe Treatment System Design Summary	106
VIII-3	Wastewater Treatment Costs for BPCTCA, BADCT and BATEA Effluent Limitations (ENR 1780 - August, 1972 Costs) Gum Turpentine and Rosin - Subcategory B	107
VIII-4	Wastewater Treatment Costs for BPCTCA,	

	BADCT and BATEA Effluent Limitations (ENR 1780 - August, 1972 Costs) Wood Turpentine and Rosin - Subcategory C	108
VIII-5	Wastewater Treatment Costs for BPCTCA, BADCT and BATEA Effluent Limitations (ENR 1780 - August, 1972 Costs) Tall Oil Fractionation - Subcategory D	109
VIII-6	Wastewater Treatment Costs for BPCTCA, BADCT and BATEA Effluent Limitations (ENR 1780 - August, 1972 Costs) Essential Oil - Subcategory E	110
VIII-7	Wastewater Treatment Costs for BPCTCA, BADCT and BATEA Effluent Limitations (ENR 7180 - August, 1972 Costs) Rosin Derivatives - Subcategory F	111
IX-1	BPCTCA Effluent Limitations Guidelines	116
X-1	BATEA Effluent Limitations Guidelines	122
XI-1	New Source Performance Standards	126
XII-1	Pretreatment Unit Operations	128
XVIII	Metric Table	185

SECTION I

CONCLUSIONS

General

The miscellaneous chemicals manufacturing point source category encompasses eight industrial segments grouped together for administrative purposes. This document provides background information for the gum and wood chemicals manufacturing point source category and represents a revision of a portion of the initial contractor's draft document issued in February, 1975.

In that document it was pointed out that the gum and wood chemicals manufacturing point source category differs from the other segments in raw materials, manufacturing processes, and final products. Water usage and subsequent wastewater discharges also vary considerably from category to category. Consequently, for the purpose of the development of the effluent limitations and corresponding BPT (Best Practicable Control Technology Currently Available), NSPS (Best Available Demonstrated Control Technology) for new sources, and BAT (Best Available Technology Economically Achievable) requirements, each category is treated independently.

The gum and wood chemicals manufacturing point source category is defined to include those commodities listed under the Standard Industrial Classifications (SIC) 2861.

It should be emphasized that the proposed model technology will be used only as a guideline. The cost models for BPT, BAT, and NSPS were developed to facilitate the economic analysis and should not be construed as the only technology capable of meeting the effluent limitations, guidelines and standards of performance presented in this development document. There are many alternative systems which, taken either singly or in combination, are capable of attaining the effluent limitations, guidelines and standards of performance recommended. These alternative choices include:

1. Various types of end-of-pipe wastewater treatment.

2. Various in-plant modifications and installation of at-source pollution control equipment.

3. Various combinations of end-of-pipe and in-plant technologies.

The intent of this document is to identify the technology that can be used to meet the limitations. This information also will allow the individual plant to make the choice of what specific combination of pollution control measures is best suited to its situation in complying with the effluent limitations, guidelines and standards of performance presented in this development document.

Gum and Wood Chemicals

According to the 1972 Census of Manufactures, there are 135 establishments in SIC 2861, twenty-three of which produced about 86% of the value added dollars.

For the purpose of developing recommended effluent limitations, guidelines and new source performance standards, the gum and wood chemicals manufacturing point source category have been subcategorized as follows:

A. Char and charcoal briquet manufacture by carbonization of hardwood and softwood scraps.
B. Gum rosin and turpentine manufacture by steam distillation of crude gum (exudate) from living longleaf pine and slash pine trees.
C. Wood rosin, turpentine, and pine oil manufacture by solvent extraction and steam distillation of old resinous wood stumps from cut over pine forests.
D. Tall oil rosin, pitch, and fatty acids manufacture by fractionation of crude tall oil, a by-product of the Kraft (sulfate) pulping process.
E. Essential oils manufacture by steam distillation of scrap wood fines from select lumbering operations.
F. Rosin-based derivatives (specifically, rosin esters and modified rosin esters) manufactured by the chemical reaction of gum, wood, or tall oil rosins.

The criteria used for establishing the above subcategorization included the impact of the following factors on the above groupings:

1. Production processes.
2. Product types and yields.
3. Raw material sources.
4. Wastewater quantities, characteristics, control, and treatment.

The wastewater parameters of significance in gum and wood chemicals manufacturing point source category were found to be BOD_5, COD, TSS, TOC, oils and grease, and pH. Chlorides, sulfates, total dissolved solids and zinc were considered

Table I -1

Summary Table

Subcategories	Contaminants of Interests	Flow L/kkg Product (gal/1,000 lbs Product)	Raw Waste Loads (RWL) BOD_5 kg/kkg[1] Product	BOD_5 mg/L	COD kg/kkg[1]	COD mg/L	TSS mg/L	Long-Term Value for BPCTCA (1977) Treatment Technology	BOD_5 kg/kkg[1]	BOD_5 mg/L	COD kg/kkg[1] Product	COD mg/L	TSS mg/L
Subcategory A Char & Charcoal Briquets	No discharge of the process wastewater pollutants.												
Subcategory B Gum Rosin & Turpentine	BOD_5, COD, TOC, Oil & Grease, TDS, Cl, SO_4, Zn, TSS	528 (63.4)	4.44	8,410	8.40	15,900		Biological treatment and sludge disposal	0.444	840	2.27	4300	50
Subcategory C Wood Rosin, Turpentine and Pine Oil	BOD_5, COD, TOC, TDS	9,470 (1,140)	6.49	685	12.6	1,330		Biological treatment and sludge disposal	0.649	68	3.40	360	50
Subcategory D Tall Oil Rosin, Pitch & Fatty Acids	BOD_5, COD, TOC, Oil & Grease, Phenol, TSS	4,860 (583)	3.11	640	7.08	1,460		Biological treatment and sludge disposal	0.311	64	1.91	394	50
Subcategory E Essential Oils	BOD_5, COD, TOC, TSS	62,100 (7,450)	70.8	1,140	86.9	1,400		Biological treatment and sludge disposal	7.08	114	23.5	378	50
Subcategory F Rosin-Based Derivatives	BOD_5, COD, TOC, Oil & Grease, Phenol, TDS, SO_4, Cl, 2n, TSS	309 (37)	4.40	14,200	8.58	27,800		Biological treatment and sludge disposal	0.440	1,420	2.32	7,510	50

Subcategories	Contaminants of Interests	Long-Term Values for BATEA (1983) Treatment Technology	BOD_5 kg/kkg[1]	BOD_5 mg/L	COD kg/kkg[1]	COD mg/L	TSS mg/L	Long-Term Values for New Source Performance Standard (BADCT) Treatment Technology	BOD_5 kg/kkg[1] Product	BOD_5 mg/L	COD kg/kkg[1] Product	COD mg/L	TSS
Subcategory A Char & Charcoal Briquets	No discharge of the process wastewater pollutants.												
Subcategory B	BOD_5, COD, TOC, Oil & Grease, TDS, Cl, SO_4, Zn, TSS	BPCTCA + Filtration + Activated Carbon	0.133	252	0.68	1,290	10	BPCTCA + Filtration	.410	774	1.97	3730	25
Subcategory C Wood Rosin, Turpentine and Pine Oil	BOD_5, COD, TOC, TDS	BPCTCA + Filtration + Activated Carbon	0.195	21	1.02	107	10	BPCTCA + Filtration	.60	63	2.96	312	25
Subcategory D Tall Oil Rosin, Pitch & Fatty Acids	BOD_5, COD, TOC, Oil & Grease, Phenol, TSS	BPCTCA + Filtration + Activated Carbon	0.093	19	0.57	118	10	BPCTCA + Filtration	.29	59	1.66	343	25
Subcategory E Essential Oils	BOD_5, COD, TOC, TSS	BPCTCA + Filtration + Activated Carbon	2.12	34	7.05	113	10	BPCTCA + Filtration	6.51	105	20.4	329	25
Subcategory F Rosin-Based Derivatives	BOD_5, COD, TOC, OIL & Grease, Phenol, TDS, SO_4, Cl, 2n, TSS	BPCTCA + Filtration + Activated Carbon	0.132	428	0.70	2,260	10	BPCTCA + Filtration	.405	1312	2.02	6540	25

[1] kg/kkg Production is equivalent to lb/1,000 lbs Production

4/30/76

and rejected as having a minor influence on effluent discharges. In addition, for subcategory F phenol was found to be a significant parameter.

Complete elimination of discharge of process wastewater pollutants should be achievable for Subcategory A, char and charcoal briquet manufacture. Individual effluent limitations, guidelines and new source performance standards were recommended for Subcategories B through F for BOD5, COD and TSS for NSPS and BAT technology levels. The BPT limitations, guidelines and new source performance standards for subcategories B through F specify BOD_5 and TSS parameters. Other RWL parameters were considered during the study, and specific products or pollutants which might be inhibitory or incompatible with BPT treatment technology are cited in Section VI.

It was concluded that the model BPT wastewater treatment technology for this industrial segment should consist of a biological treatment system. Typical exemplary processes are activated sludge or aerated lagoons with clarification. These systems may require pH control and equalization in order to control variation in waste loads, and phosphorus and nitrogen nutrient addition to ensure maintenance of an activated sludge with desirable performance and handling characteristics. These systems do not preclude the use of equivalent physical/chemical systems such as activated carbon in a suitable situation where the significant land area that would otherwise be required (for activated sludge or aerated lagoon) is not available. Additionally, in-plant controls are recommended to control those pollutants which may be inhibitory to the biological waste treatment system, as well as segregation of non-contact cooling waters and utility blowdowns.

End-of-process wastewater treatment technology for new sources utilizing the Best Available Demonstrated Control Technology (NSPS) is a biological treatment system with suspended solids removal by means of dual-media filtration. In addition, exemplary in-plant controls are also recommended, particularly where biologically inhibitory pollutants must be controlled. These are described in section IX.

Best Available Technology Economically Achievable (BAT) is based upon the addition of filtration and activated carbon to BPT treatment. This technology is based upon the need for substantial reductions of dissolved organics which are biorefractory as well as those which are biodegradable.

Effluent limitations, guidelines and new source performance standards were derived on the basis of the maximum for any one day and the maximum average of daily values for any period of thirty consecutive days. No long-term data for exemplary treatment were found in the gum and wood chemicals manufacturing point source category during this study. The variabilities factors used in deriving these time-based effluent limitations, guidelines and new source performance standards were derived using long-term performance data from the systems evaluated by EPA for petroleum refining manufacturing since the two industries have many similarities (e.g., continuous distillation operations of organic compounds) and is judged to be reasonable transfer of technology. Because of similarity of treatability, treatment systems, processes and fit with the daily and monthly data.

Table I-1 summarizes the contaminants of interest, raw waste loads, and recommended treatment technologies for BPT, BAT, and NSPS for each subcategory of the gum and wood chemicals manufacturing point source category.

SECTION II

RECOMMENDATIONS

General

The recommendations for effluent limitations and guidelines commensurate with the BPT, BAT and NSPS are given in this text for the gum and wood chemicals manufacturing point source category. A discussion of in-plant and end-of-pipe control technology required to achieve the recommended effluent limitations, guidelines and new source performance standards are included.

Gum and Wood Chemicals

Implicit in the recommended effluent limitations, guidelines and new source performance standards for the gum and wood chemicals manufacturing point source category is the assumption based on observations of fourteen plants that process wastes can be isolated from uncontaminated wastes such as utility discharges and uncontaminated storm runoff. Isolation of process wastewater is generally the first recommended step in accomplishing the reductions necessary to meet the proposed effluent limitations and guidelines. Treatment of uncontaminated wastewaters together with contaminated process wastewaters in a treatment facility is not generally cost-effective and creates a great many operational control problems.

Effluent limitations and guidelines commensurate with BPT are presented for each subcategory of the gum and wood chemicals segment in Table II-1. The effluent limitations and guidelines were derived on the basis of the maximum average of daily values for thirty consecutive days and the maximum for any one day and have been developed on the basis of the performance factors for treatment plant operation as discussed in Section XIII of this development document. Process wastewaters subject to these limitations do not include non-contact sources such as boiler and cooling water blowdown, sanitary, and other similar flows. BPT also includes the maximum utilization of applicable in-plant pollution abatement technology to minimize capital expenditures for end-of-pipe wastewater treatment facilities. Flow for BPT is identical with flow for BAT in this document. End-of-pipe technology for BPT involves the application of biological treatment, as typified by activated sludge or aerated lagoons with clarification system ponds.

Table II -1

BPCTCA Effluent Limitations Guidelines

Subcategory	Effluent Characteristic	Effluent Limitations: Average of Daily Values for 30 Consecutive Days Shall not Exceed kg/kkg[1]	mg/L	Maximum for Any One Day kg/kkg	mg/L
A		No Discharge of process wastewater pollutants			
B	BOD_5	.755		1.42	
	TSS	0.026	50	0.077	145
C	BOD_5	1.10		2.08	
	TSS	0.475	50	1.38	145
D	BOD_5	0.529		0.995	
	TSS	0.243	50	.705	145
E	BOD_5	12.0		22.7	
	TSS	3.11	50	9.01	145
F	BOD_5	0.748		1.41	
	TSS	0.015	50	.045	145

[1] kg/kkg Production is equivalent to lbs/1,000 lbs production

Table II -2

BATEA Effluent Limitations Guidelines

Subcategory	Effluent Characteristic	Effluent Limitations: Average of Daily Values for 30 Consecutive Days Shall not Exceed		Effluent Limitations: Maximum for Any One Day	
		kg/kkg[1]	mg/L	kg/kkg	mg/L
A		No Discharge of process wastewater pollutants			
B	BOD_5	.22		.28	
	COD	1.09		1.36	
	TSS	.005	10	.01	20
C	BOD_5	.33		.41	
	COD	1.63		2.04	
	TSS	.095	10	.19	20
D	BOD_5	.16		.20	
	COD	0.91		1.14	
	TSS	.049	10	0.098	20
E	BOD_5	3.61		4.45	
	COD	11.3		14.1	
	TSS	.62	10	1.25	20
F	BOD_5	.22		.28	
	COD	1.12		1.40	
	TSS	.003	10	.006	20

[1] kg/kkg Production is equivalent to lbs/1,000 lbs production

Table II -3

BADCT Effluent Limitations Guidelines

Subcategory	Effluent Characteristic	Effluent Limitations: Average of Daily Values for 30 Consecutive Days Shall not Exceed kg/kkg[1]	mg/L	Maximum for Any One Day kg/kkg	mg/L
A		No Discharge of process wastewater pollutants			
B	BOD_5	.70		.86	
	COD	3.15		3.94	
	TSS	0.013	25	.026	50
C	BOD_5	1.02		1.25	
	COD	4.74		5.92	
	TSS	0.24	25	.48	50
D	BOD_5	0.49		.60	
	COD	2.66		3.32	
	TSS	0.12	25	.24	50
E	BOD_5	11.1		13.7	
	COD	32.6		40.8	
	TSS	1.55	25	3.10	50
F	BOD_5	0.69		0.85	
	COD	3.23		4.04	
	TSS	.008	25	0.016	50

[1] kg/kkg Production is equivalent to lbs/1,000 lbs production

Effluent limitations guidelines to be attained by application of the BAT are presented in Table II-2. End-of-pipe treatment for BAT includes the addition of an activated carbon system to the BPT treatment processes. Exemplary in-plant controls are also applicable to this technology. It is emphasized that the model treatment system does not preclude the use of activated carbon within the plant for recovery of products, by-products, and catalysts.

The Best Available Demonstrated Control Technology (NSPS) for new sources includes the most exemplary process controls, with biological waste treatment followed by filtration for removal of suspended solids. Effluent limitations and guidelines to be attained by the application of BAT and NSPS for subcategories within the gum and wood chemicals manufacturing point source category are presented in Table II-3.

It is recommended that wastewater be treated on site. If municipal treatment is advantageous over on-site treatment, a pretreatment system must be designed to remove potentially hazardous wastes. These wastes are identified in section VI of this document.

Due to the unavailability of a long-term performance record in this industry, it is recommended that the performance factors be transferred from the petroleum refining point source category based on the similarities of the categories (continuous distillation operations in dedicated equipment of basically hydrocarbon materials). When a more reliable data base is developed in this industry and as mandated by the "Act", these performance factors will be reevaluated.

SECTION III

INTRODUCTION

Purpose and Authority

The Federal Water Pollution Control Act Amendments of 1972 (the Act) made a number of fundamental changes in the approach to achieving clean water. One of the most significant changes was to shift from a reliance on effluent limitations related to water quality to a direct control of effluents through the establishment of technology-based effluent limitations to form an additional basis, as a minimum, for issuance of discharge permits.

The Act requires EPA to establish guidelines for technology-based effluent limitations which must be achieved by point sources of discharges into the navigable waters of the United States. Section 301(b) of the Act requires the achievement by not later than July 1, 1977 of effluent limitations for point sources, other than publicly owned treatment works, which are based on the application of the BPT as defined by the Administrator pursuant to Section 304(b) of the Act. Section 301(b) also requires the achievement by not later than July 1, 1983 of effluent limitations for point sources, other than publicly owned treatment works, which are based on the application of the BAT, resulting in progress toward the national goal of eliminating the discharge of all pollutants, as determined in accordance with regulations issued by the Administrator pursuant to Section 304(b) of the Act. Section 306 of the Act requires the achievement by new sources of federal standards of performance providing for the control of the discharge of pollutants, which reflects the greatest degree of effluent reduction which the Administrator determines to be achievable through the application of the NSPS processes, operating methods, or other alternatives, including, where practicable, a standard permitting no discharge of pollutants.

Section 304(b) of the Act requires the Administrator to publish regulations based on the degree of effluent reduction attainable through the application of the BPT and the best control measures and practices achievable, including treatment techniques, process and procedure innovations, operation methods, and other alternatives. The regulations proposed herein set forth effluent limitations and guidelines pursuant to Section 304(b) of the Act for gum and wood chemicals manufacturing point source category.

Section 304(c) of the Act requires the Administrator to issue information on the processes, procedures, or operating methods which result in the elimination or reduction in the discharge of pollutants to implement standards of performance under Section 306 of the Act. Such information is to include technical and other data, including costs, as are available on alternative methods of elimination or reduction of the discharge of pollutants.

Section 306 of the Act requires the Administrator, within one year after a category of sources is included in a list published pursuant to Section 306(b) (1) (A) of the Act, to propose regulations establishing federal standards of performance for new sources within such categories. The Administrator published in the Federal Register of January 16, 1973 (38 FR 1624) a list of 27 source categories. Publication of the list constituted announcement of the Administrator's intention of establishing, under Section 306, standards of performance applicable to new sources.

Furthermore, Section 307(b) provides that:

1. The Administrator shall, from time to time, publish proposed regulations establishing pretreatment standards for introduction of pollutants into treatment works (as defined in Section 212 of this Act) which are publicly owned, for those pollutants which are determined not to be susceptible to treatment by such treatment works or which would interfere with the operation of such treatment works. Not later than ninety days after such publication, and after opportunity for public hearing, the Administrator shall promulgate such pretreatment standards. Pretreatment standards under this subsection shall specify a time for compliance not to exceed three years from the date of promulgation and shall be established to prevent the discharge of any pollutant through treatment works (as defined in Section 212 of this Act) which are publicly owned, which pollutant interferes with, passes through, or otherwise is incompatible with such works.
2. The Administrator shall, from time to time, as control technology, processes, operating methods, or other alternatives change, revise such standards, following the procedure established by this subsection for promulgation of such standards.
3. When proposing or promulgating any pretreatment standard under this section, the Administrator

shall designate the category or categories of sources to which such standard shall apply.

4. Nothing in this subsection shall affect any pretreatment requirement established by any State or local law not in conflict with any pretreatment standard established under this subsection.

In order to insure that any source introducing pollutants into a publicly owned treatment works, which would be a new source subject to Section 306 if it were to discharge pollutants, will not cause a violation of the effluent limitations established for any such treatment works, the Administrator is required to promulgate pretreatment standards for the category of such sources simultaneously with the promulgation of standards of performance under Section 306 for the equivalent category of new sources. Such pretreatment standards shall prevent the discharge into such treatment works of any pollutant which may interfere with, pass through, or otherwise be incompatible with such works.

The Act defines a new source to mean any source the construction of which is commenced after the publication of proposed regulations prescribing a standard of performance. Construction means any placement, assembly, or installation of facilities or equipment (including contractual obligations to purchase such facilities or equipment) at the premises where such equipment will be used, including preparation work at such premises.

Methods Used for Development of the Effluent Limitations and Standards for Performance

The effluent limitations, guidelines and standards of performance proposed in this document were developed in the following manner. The miscellaneous chemicals manufacturing point source category was first divided into industrial categories, based on type of manufacturing and products manufactured. Determination was then made as to whether further subcategorization would aid in description of the category. Such determinations were made on the basis of raw materials required, products manufactured, processes employed, and other factors.

The raw waste characteristics for each category and/or subcategory were then identified. This included an analysis of: 1) the source and volume of water used in the process employed and the sources of wastes and wastewaters in the plant; and 2) the constituents of all wastewaters (including toxic constituents) which result in taste, odor,

and color in water or aquatic organisms. The constituents of wastewaters which should be subject to effluent limitations, guidelines and standards of performance were identified.

The full range of control and treatment technologies existing within each category and/or subcategory was identified. This included an identification of each distinct control and treatment technology, including both in-plant and end- of-pipe technologies, which are existent or capable of being designed for each subcategory. It also included an identification of the effluent level resulting from the application of each of the treatment and control technologies, in terms of the amount of constituents and of the chemical, physical, and biological characteristics of pollutants. The problems, limitations, and reliability of each treatment and control technology and the required implementation time were also identified. In addition, the non-water quality environmental impacts (such as the effects of the application of such technologies upon other pollution problems, including air, solid waste, radiation, and noise) were also identified. The energy requirements of each of the control and treatment technologies were identified, as well as the cost of the application of such technologies.

The information, as outlined above, was evaluated in order to determine what levels of technology constituted the BPT, BAT, and NSPS. In identifying such technologies, factors considered included the total cost of application of technology in relation to the effluent reduction benefits to be achieved from such application, the age of equipment and facilities involved, the process employed, the engineering aspects of the application of various types of control techniques, process changes, non-water quality environmental impact (including energy requirements), and other factors.

During the initial phases of the study, an assessment was made of the availability, adequacy, and usefulness of all existing data sources. Data on the identity and performance of wastewater treatment systems were known to be included in:

1. NPDES permit applications.
2. Self-reporting discharge data from various states and regions.
3. Surveys conducted by trade associations or by agencies under research and development grants.

A preliminary analysis of these data indicated an obvious need for additional information.

Additional data in the following areas were required: 1) process raw waste load (RWL) related to production; 2) currently practiced or potential in-plant waste control techniques; and 3) the identity and effectiveness of end-of-pipe treatment systems. The best source of information was the manufacturers themselves. Additional information was obtained from direct interviews and sampling visits to production facilities.

Collection of the data necessary for development of RWL and effluent treatment capabilities within dependable confidence limits required analysis of both production and treatment operations. In a few cases, the plant visits were planned so that the production operations of a single plant could be studied in association with an end-of-pipe treatment system which receives only the wastes from that production. The RWL for this plant and associated treatment technology would fall within a single subcategory. However, the wide variety of products manufactured by most of the industrial plants made this situation rare.

In the majority of cases, it was necessary to visit facilities where the products manufactured fell into several subcategories. The end-of-pipe treatment facilities received combined wastewaters associated with several subcategories (several products, processes, or even unrelated manufacturing operations). It was necessary to analyze separately the production (waste-generating) facilities and the effluent (waste treatment) facilities. This approach required establishment of a common basis, the raw waste load (RWL), for common levels of treatment technology for the products within a subcategory and for the translation of treatment technology between categories and/or subcategories.

The selection of wastewater treatment plants was developed from identifying information available in the NPDES permit applications, state self-reporting discharge data, and contacts within the manufacturing segment. Every effort was made to choose facilities where meaningful information on both treatment facilities and manufacturing processes could be obtained.

Survey teams composed of project engineers and scientists conducted the actual plant visits. Information on the identity and performance of wastewater treatment systems was obtained through:

1. Interviews with plant water pollution control personnel or engineering personnel.

2. Examination of treatment plant design and historical operating data (flow rates and analyses of influent and effluent).
3. Treatment plant influent and effluent sampling.

Information on process plant operations and the associated RWL was obtained through:

1. Interviews with plant operating personnel.
2. Examination of plant design and operating data (design specification, flow sheets, day-to-day material balances around individual process modules or unit operations where possible).
3. Individual process wastewater sampling and analysis.

The data base obtained in this manner was then utilized by the methodology previously described to develop recommended effluent limitations, guidelines and standards of performance for the gum and wood chemicals manufacturing point source category. All of the references utilized are included in Section XV of this report. The data obtained during the field data collection program are included in Supplement B. Cost information is presented in Supplement A. These documents are available for examination by interested parties at the EPA Public Information Reference Unit, Room 2922 (EPA Library), Waterside Mall, 401 M St. S.W., Washington, D.C. 20460.

The following text describes the scope of the study, technical approach to the development of effluent limitations and guidelines, and the scope of coverage for the data base.

Gum and Wood Chemicals

Scope of the Study

The gum and wood chemicals segment was defined for the purpose of this study to include those 47 commodities listed under SIC (Standard Industrial Classification) 2861. It should be noted, however, that the list contains some anomalies with regard to manufacturing activities in the gum and wood chemicals category, including the following:

1. The list contains some 20 natural tanning materials and dye stuffs which are of minor importance in U.S. manufacturing activities in terms of production quantities or dollar value added by the manufacture. The majority of these materials,

particularly the extracts, are imported to the U.S. for distribution, and therefore represent little or no manufacturing activity.

2. Many of the products listed represent old technology, particularly hardwood distillation. The products associated with the recovery and processing of pyroligneous acid have been displaced from the market, and thus from manufacturing activity, by cheaper synthetic substitute products. Compounds which are contained in pyroligneous acid include acetate of lime (natural), acetone (natural), calcium acetate (product of hardwood distillation) ethyl acetate (natural), methyl acetate (natural), and methyl alcohol (natural). Also, the technology for manufacturing pit charcoal, while still employed in some parts of the world, is no longer employed in the United States.
3. Crude tall oil, except skimmings, is a product of the Kraft (sulfate) wood fiber pulping process. The manufacture of this material is an integral part of the sulfate process and therefore the associated wastewater production, if any, would be intricately contained in Kraft manufacturing's raw waste load (RWL). In actual practice, crude tall oil is usually shipped to fractionation plants which produce tall oil rosin, turpentine and pitch. It is this fractionation step which is included in this study.
4. Rosins, produced by the distillation of pine gum or pine wood, have historically been used with varying success as a principal ingredient of numerous products, such as printing inks, linoleum, varnishes, electrical insulation, foundry core oils, leather, adhesives, masonry, and solder fluxes. However, since 1949, gum rosin production has decreased and wood rosin markets have been limited by the competition of tall oil rosin. In addition, most of the rosins sold today are either thermally or chemically modified derivatives which have improved applications both in older markets and recently developed markets.

The product list under SIC 2861 was developed by the United States Department of Commerce and is oriented toward the collection of economic data related to gross production, sales, and unit costs. The SIC list is not related to the true nature of the manufacturing in terms of actual plant operations, production, or considerations associated with water pollution control. As such, the list does not provide a definitive set of boundaries for study of the effluent

limitations for the gum and wood chemicals manufacturing point source category.

It should be noted that, even though this study did not concern the management of forests, timber harvesting, or the production of pulp via the Kraft pulping process, these areas of endeavor are included to provide an understanding of the interrelationships of activities within the manufacturing segment as well as those which are essential to the supply of the necessary raw materials to the manufacturers. During the course of the study, six major production areas were identified for in-depth study:

1. Char and charcoal briquet manufacturing via carbonization of hardwood and softwood scraps.
2. Gum rosin and turpentine manufacturing via steam distillation of gum from longleaf and slash pine trees.
3. Wood rosin, turpentine, and pine oil manufacture via the solvent extraction and steam distillation of resinous material from old wood stumps obtained from cut over pine forests.
4. Tall oil rosins, fatty acids, and pitch production via the fractionation of crude tall oil, a by-product of the Kraft pulping process.
5. Essential oils production via steam distillation of coniferous wood fines from select lumbering operations.
6. Rosin derivatives manufacture via chemical or thermal modifications of either tall oil, gum, or wood rosins.

Scope of Coverage for Data Base

According to the 1972 Census of Manufacturers, there are 135 establishments engaged in the primary manufacturing activities of SIC 2861 products and discharging approximately 19 billion gallons of wastewater per year according to the 1967 Census of Manufacturers, Water Use in Manufacturing.

These establishments were responsible for total product value shipments totaling $226 million, or 76 percent of the total $296.3 million worth of gum and wood chemical products. The remaining products are produced in facilities primarily engaged in other manufacturing activities. Table III-1 presents a breakdown of product value shipped by major manufacturers as established by this study. It should be noted that the reported value of the product shipped does not necessarily represent a level of manufacturing activity.

Table III - 1

Production and Product Value[1]

Subcategory		Quantity (tons/year)	Value $10^6	Value Percent
A	Hardwood Char (including Briquets)[2]	531,400	79.7	26.9
A, E	Softwood Char and Essential Oils[2]	Data Not Reported	37.8	12.8
C	Solvent Extracted/Steam Distilled			
	Wood Rosin	341,150	43.6	
	Wood Turpentine	11,350	1.0	
	Pine Oil	28,950	11.7	
	Sub-total	381,450	56.3	19.0
B	Gum Naval Stores			
	Gum Turpentine	Data Not Reported	4.1	
	Gum Rosin	7,833	2.6	
	Sub-total	Data Not Reported	6.7	2.3
	Tall Oil			
	Crude Tall Oil from Kraft Process	563,800	44.2	14.9
D	Tall Oil Rosins and Resins	335,250	52.2	17.6
D	Tall Oil Products not specified	Data Not Reported	4.4	1.5
	Natural Tanning and Dyeing Materials and Chrome Tanning Mixtures	Data Not Reported	5.4	1.8
	Not Specified	Data Not Reported	9.6	3.2
	Total		296.3	100.0

[1] Derived from 1972 Census of Manufacturers.

[2] Includes pyroligneous acid, or constituents, if recovered.

FIGURE III -1

INTERRELATIONSHIPS OF PRESENT GUM & WOOD CHEMICALS INDUSTRY

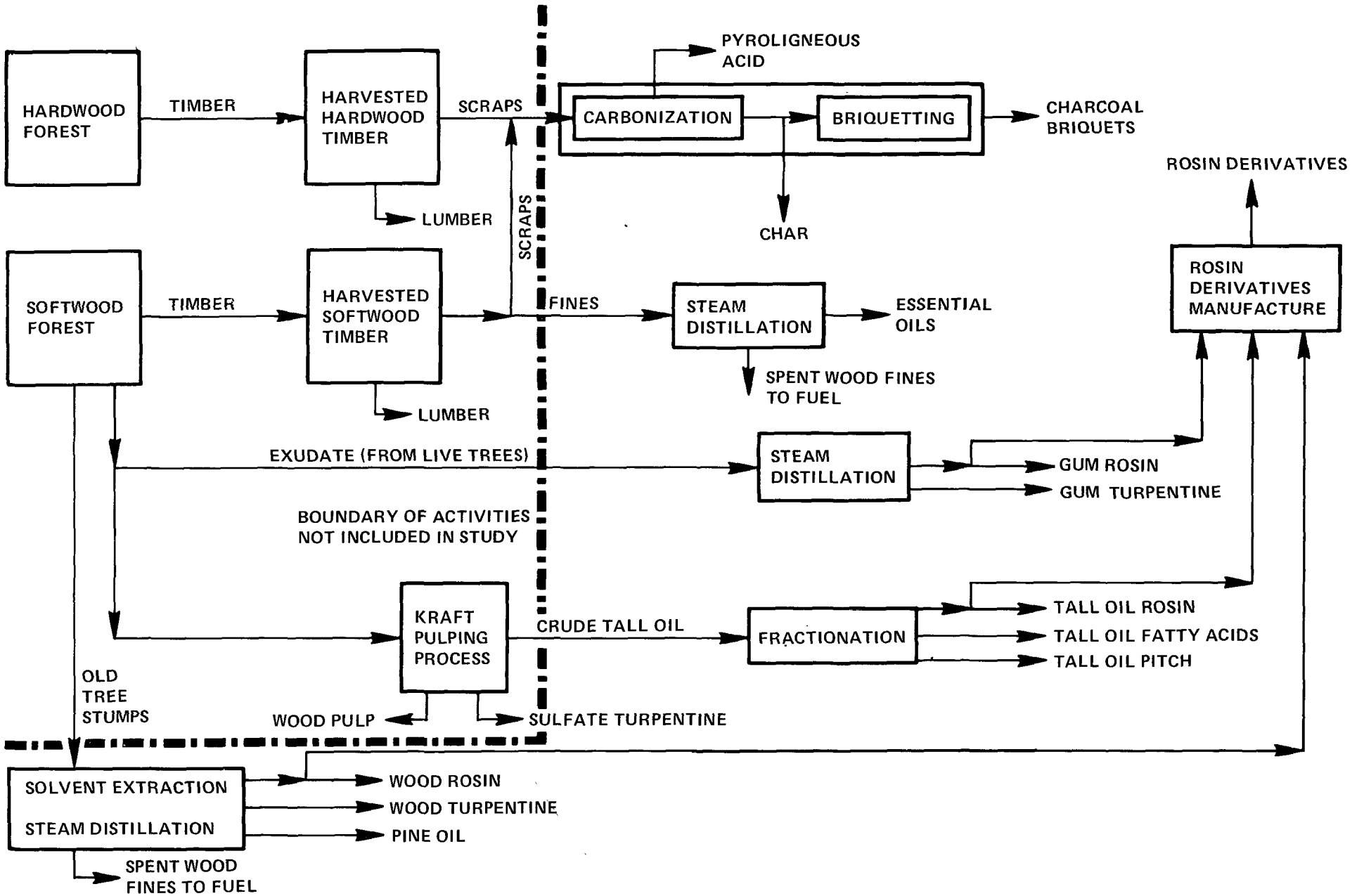

4/30/76

For example, the $5.4 million value for natural tanning and dyeing materials and chrome tanning mixtures is more probably representative of a wholesaling operation rather than actual manufacturing.

To help quantify the problem, only 14 of the 135 establishments primarily engaged in production of commodities listed under SIC 2861 have applied for NPDES discharge applications. Seven of those 14 facilities were surveyed during the course of this study and three additional facilities were requested to supply information and data via the U.S. Mail. Another three of the fourteen were charcoal plants that have no discharge of process wastewater pollutants. A pilot study in the 14th plant is available. This study was preformed by an independent consultant, AWARE, Inc.

SECTION IV

INDUSTRIAL CATEGORIZATION

The purpose of this study is the development of effluent limitations and guidelines for the gum and wood chemicals segment that will be commensurate with different levels of in-plant waste reduction and end-of-pipe pollution control technology. These effluent limitations and guidelines specify the quantity of pollutants which are to be discharged from a specific facility and are related to a common yardstick for the manufacturing segment, the quantity of production.

Gum and Wood Chemicals

Discussion of the Rationale of Categorization

In developing effluent limitations, guidelines and standards of performance for gum and wood chemicals manufacturing, it was necessary to determine whether significant differences existed within the segment which could be used as a basis for subcategorization in order to define those areas of the segment where separate effluent limitations, guidelines and standards of performance should apply. A final subcategorization was developed based on product differences:

A. Char and charcoal briquets.
B. Gum rosin and gum turpentine.
C. Wood rosin, resin turpentine, and pine oil.
D. Tall oil rosin, pitch, and fatty acids.
E. Essential oils.
F. Rosin derivatives.

The following factors were considered in determining the subcategorization that would be most meaningful for developing effluent limitations, guidelines and standards of performance:

Manufacturing Process

The process steps by which gum, wood, tall oil chemicals and essential oils are produced are similar in that steam distillation is employed for separating the major constituents. Wood chemical production processes are somewhat different in that solvent extraction is employed. The production of charcoal and rosin-based derivatives is different from the other processes because steam

distillation is not employed. Charcoal is a carbonization or destructive distillation product whereas rosin derivatives are products of chemical reactions. Based on these distinct differences, the manufacturing processes employed for these products are a basis for subcategorization.

Product

The major products presented above are significantly different. The essential oils are chemically related to turpentine. However, their product yield, based on raw materials, is about one percent because there is no market for the spent wood, while the total product yields for gum and wood rosins approach 100 and 25 percent, respectively, on a clean raw-materials basis. Thus, it would not appear justifiable to group essential oils production with gum or wood chemicals because of differences in product make-up yield. Therefore, product type is a basis for subcategorization.

Raw Materials

The basic raw materials for each of the proposed product subcategories are as follows:

Product	Raw Material Source
Char and Charcoal Briquets	Hardwood and softwood scraps
Gum Rosin and Turpentine	Crude gum from the sapwood of living trees
Wood Rosin, Turpentine, and Pine Oil	Wood stumps and other resinous woods from cut over forest
Tall Oil Rosin, Pitch, and Fatty Acids	By-product crude tall oil from the Kraft process
Essential Oils	Scrap wood fines, twigs, barks, or roots of select woods or plants
Rosin Derivatives	Rosin products from gum, wood, and tall oil chemicals

Variation in raw materials can be expected within each group. For example, seasonal changes bring about changes in crude gum composition. Late in the growing season, crude gum is termed scrape, which generally contains less turpentine and more trash.

However, variations in quality can be expected in the raw material stocks within any of the groups. Where variations in raw materials require additional processing to achieve product quality, it is probable that additional waste will be generated. For purposes of this study these ancillary refining processes can be classified into groups according to the type of waste they generate (i.e., wet or dry). Filtration and adsorption processes, which generate semi-solid waste disposed of in landfills, are classified as dry wastes. Acid treating and solvent extraction processes generate a liquid waste and therefore are classified as wet wastes. The solvent, however, is normally recovered for reuse.

Dilute acid treatment (acidulation) is commonly employed to remove odor and color bodies and can be expected to yield higher raw waste loads per unit of production. The prevalence of acidulation of raw materials, the quantity of specific pollutants generated, and the impact of dry versus wet refining methods on the final products and resulting RWL's appears to be a function of product type. Based on the above discussion, it is concluded that raw materials are a basis for subcategorization.

Plant Size

Operations in gum and wood chemicals manufacturing range in size from intermittent batch operations, which are operated by a handful of personnel, to large complexes which employ hundreds of personnel. Water use management techniques are affected by economy of scale, as well as other factors, such as geographical location. On the other hand, smaller operations may have waste treatment and disposal options, such as retention, land spreading, and trucking to landfill, that are impractical for large-scale operations.

Plant size has not been observed to have an impact on the quantity and characteristics of the wastewater, therefore, plant size is not considered a basis for subcategorization.

Plant Age

Plant age is nct considered as a basis for subcategorization in itself because the manufacturers have continuously

Figure IV - a

Charcoal Briquet Plants

Geographical Location December 31, 1974

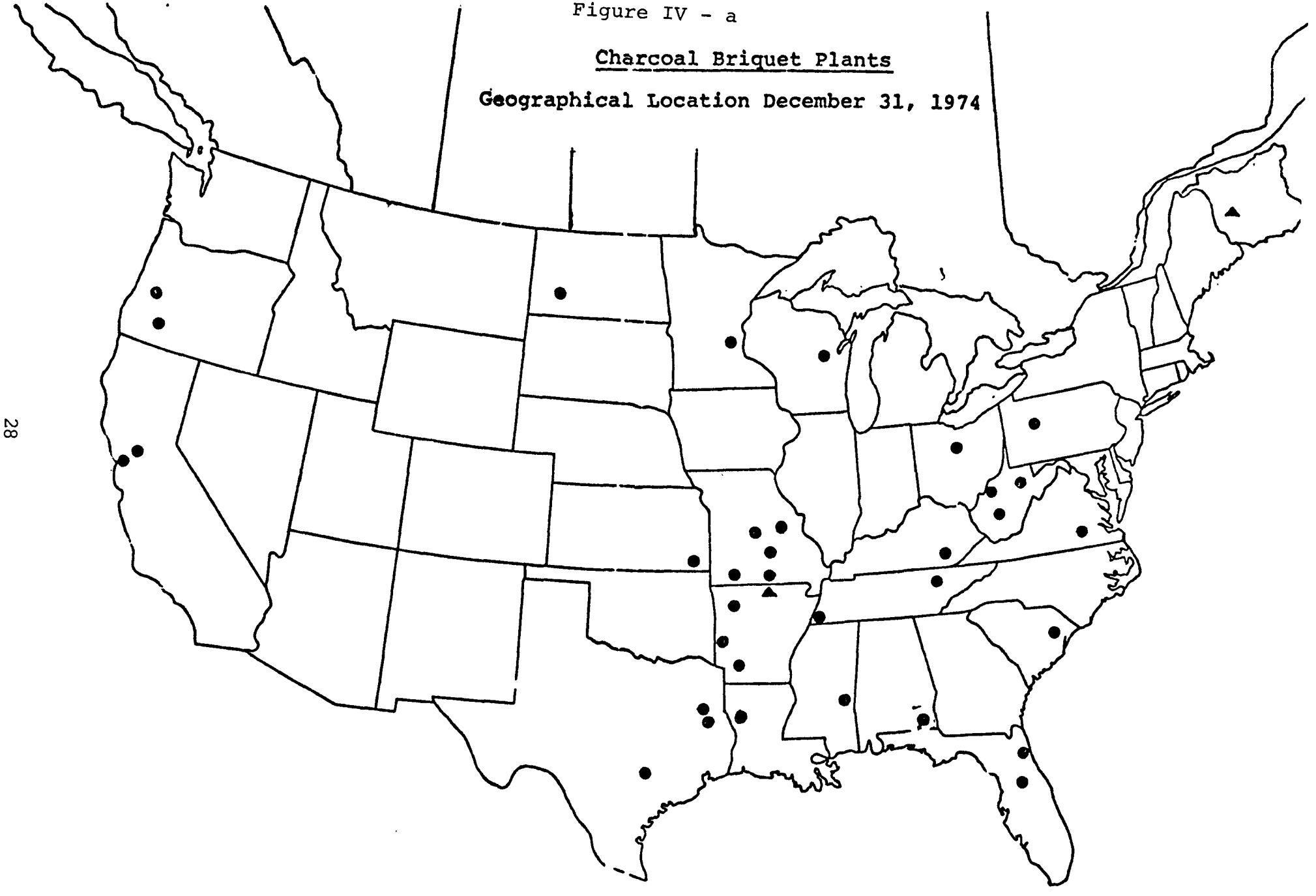

● Operating Plants - 34
■ Under Construction - 0
▲ Not Operating - 2

4/30/76

Table IV -1

Statistics by Geographical Areas

Geographical Area	Value added by Manufacturer $\$10^6$	Value added by Manufacturer Percent	Establishments Number	Establishments Percent
Northeast Region	4.8	3.1	22	16.3
North Central Region	13.6	8.8	40	29.6
South Region	129.6	84.1	68	50.4
West Region	6.1	4.0	5	3.7
	154.1	100.0	135	100.0

Source: 1972 Census of Manufacturing

upgraded and modernized their operations as dictated by the competitive market. Equipment is modernized as it becomes necessary, so that the actual age of a production facility could not be determined accurately. Furthermore, the actual age of the equipment does not necessarily affect wastewater generation. Operation and maintenance of the equipment are more important factors.

Plant Location

According to the 1972 Census of Manufacturers, half of the establishments in gum and wood chemicals production are located in the southern states (see Table IV-1), and they produced over 84 percent of the segment's output in terms of dollar value added to the raw material. 95% of today's gum turpentine and rosin is produced in Georgia and Florida.

Plant location, and specifically local climate, has an impact on the performance of certain end-of-pipe wastewater treatment systems, e.g., aerated lagoons and activated sludge, but because 84% of the industries output is from the same region and because treatment systems should be designed for the climate in which it will be operated, plant location is not a basis for subcategorization.

Air Pollution Control Technology

Air pollution is not a major problem in any of the manufacturing activities in the six product groupings. Particulate emissions were observed to be a potential problem in pneumatic conveyance systems. However, these emissions can be controlled with more efficient dry cyclone separators. This will not have any appreciable impact on wastewater generation.

Two plants that manufactured rosin derivatives were visited during the field survey. One of the plants vented the non-condensables to the atmosphere, and no significant impact on pollutant loading per unit of production was observed. The total quantity of non-condensable organics vented was very small.

A fugitive dust problem was observed at a char and charcoal production unit. The existing control methods employed a water spray, but quantities were not sufficient to cause a surplus water problem. It is anticipated that the ultimate solution of the fugitive dust problem would involve an improved materials-handling system and the elimination of dust-wetting techniques.

Table IV -2

Comparison of Raw Waste Loads
By Product Grouping

Production	RWL Characteristics				
	Flow	BOD	COD	TSS	Oil
Char and Charcoal	Zero	N/A	N/A	N/A	N/A
Gum Rosin and Turpentine	*	XXX	XXX	X	XX
Wood Rosin, Turpentine, Pine Oil	***	XXX	XXXX	XX	XX
Tall Oil Fractionation Products	**	XXX	XXX	X	XXX
Essential Oils	***	XXXX	XXXX	XX	X
Rosin Derivative	*	XXX	XXX	X	XX

Legend

Flow	*	≤ 100 Gallons/1,000 lbs. Product
	**	100 to 1,000 Gallons/1,000 lbs. Product
	***	1,000 Gallons/1,000 lbs. Products
Other RWL's	X	≤ 0.1 lb./1,000 lbs. Product
	XX	0.1 to 1.0 lb./1,000 lbs. Product
	XXX	1.0 to 10.0 lbs./1,000 lbs. Product
	XXXX	>10.0 lbs./1,000 lbs. Product

In conclusion, air pollution is controlled in the gum and wood chemicals segment by dry mechanical devices and wet-scrubbing units which do not significantly affect wastewater loading or characteristics. Therefore, air pollution control technology is not a basis for subcategorization.

Solid Waste Disposal

Significant quantities of solid residue are generated in the manufacturing processes of charcoal, gum, wood, and essential oil production. Spent wood fines are the major fraction of the solids from wood rosin, turpentine, essential oils, and pine oil production. In both cases these wood fines are fed to boilers, where the residual BTU value of the fines is used to generate steam. The solids which are generated in the production of gum rosin and turpentine include the trash contained in the crude gum material plus filter aid material which may be employed in the filtration of the melted crude gum. Filter aid materials are also known to be used for the product refining of oil of cedarwood. The use of filtration aids or adsorbent materials, such as powdered activated carbon, for refining final or intermediate products is common to all product categories. Such solids are normally disposed of in sanitary landfills.

The handling and final disposal of solid wastes which are generated in the gum and wood chemicals segment has not been observed to have an impact on the quantity or characteristics of the wastewater. Therefore, solid waste generation, handling, or disposal is not a basis for subcategorization.

Wastewater Quantities, Characteristics, Control, and Treatment

Table IV-2 shows the relative variation in the wastewater quantities and pollutants per unit of production. In reviewing the table, some similarities in the pertinent RWL parameters are apparent; however, the variations are significant enough to support the categorization.

The control and treatment of wastewaters for each of the product categories is discussed in Section VII of this document. Variations in the proposed treatment concepts, though not totally dissimilar, will provide additional justification for the proposed subcategorization.

Summary of Considerations

Table IV -3

Factors Considered for Basis of Gum and Wood Chemicals Segment Subcategorization

Factors	Proposed Subcategorization					
	Char, and Charcoal Briquets	Gum Rosin, and Turpentine	Wood Rosin, Turpentine and Pine Oil	Rosin, Pitch, and Fatty Acids	Essential Oils	Rosin, Derivatives
Manufacturing Process	X	-	X	-	-	X
Product	-	X	X	-	X	-
Raw Material	-	X	X	X	-	X
Plant Size	-	-	-	-	-	-
Plant Location	-	-	-	-	-	-
Air Pollution Control Technology	-	-	-	-	-	-
Solid Waste Disposal Operations	-	-	-	-	-	-
Wastewater Quantities Characteristics, Control, and Treatment	X	-	X	X	X	-

Legend

X denotes a contributing factor for categorization
- denotes factor was considered not pertinent for categorization

For the purpose of establishing effluent limitations, guidelines and standards, the gum and wood chemicals manufacturing point source category should be subcategorized by major product grouping. Table IV-3 provides a summary of the factors considered for subcategorization. The factors which were significant in developing the basis for subcategorization include:

1. Production Processes.
2. Product Types and Yields.
3. Raw Material Sources.
4. Wastewater Quantities, Characteristics, Control, and Treatment.

As Table IV-3 shows, the five other factors also examined did not justify further subcategorization based on the observations made throughout this study.

Description of Subcategories

Subcategory A - Char and Charcoal Briquets

Plants included under Subcategory A are those engaged in the manufacture of char and charcoal briquets, as well as pyroligneous acids and other by-products. Presently, no pyroligneous acids are known to be manufactured in the United States. Char and charcoal from hardwood and softwood distillation are economically the most important products in the gum and wood chemicals segment. Char and charcoal are produced by the carbonization of wood, which is the thermal decomposition cf raw wood. See Figure IV-a for plant locations.

Subcategory B - Gum Rosin and Turpentine

Plants included under Subcategory B are those engaged in the manufacture of gum rosin and turpentine by the distillation of crude gum. Gum rosin and turpentine products make up 2.3 percent of the total product value for the gum and wood chemicals segment, according to the 1972 Census of Manufacturers. High labor costs for gum collection and the development of less costly substitute products have caused a decline in the value of product shipments in this subcategory. The plants which were visited during this study operated only on intermittent schedules.

Subcategory C - Wood Rosin, Turpentine and Pine Oil

Plants included under Subcategory C are those engaged in manufacturing wood rosin, turpentine and pine oil. These

FIGURE IV -1

CHAR AND CHARCOAL BRIQUET MANUFACTURING

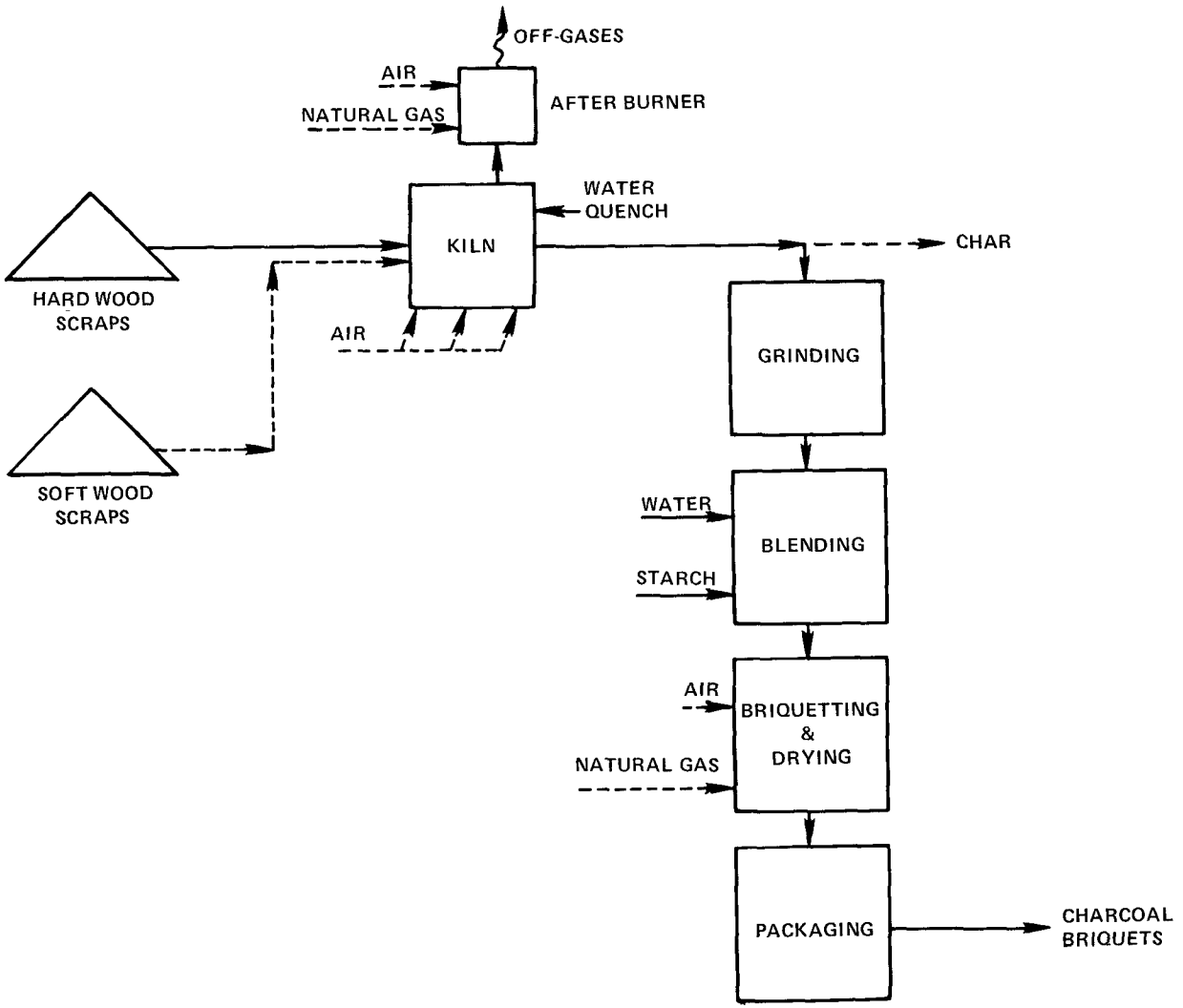

4/30/76

industries use solvent extraction and steam distillation as their manufacturing processes, and their typical raw materials are resinous wood stumps. These products account for 19 percent of the total product value for the total industry, according to the 1972 Census of Manufacturers. The economic life of this subcategory is limited by a lack of available raw materials near existing plants and the development of economically competitive processes.

Subcategory D - Tall Oil Rosin, Fatty Acids and Pitch

Plants included under Subcategory D are those which manufacture tall oil rosin, fatty acids, and pitch by fractionation of Kraft process crude tall oil. The growth of tall oil refining has been unabated since the inception of modern technology in 1949. Technology for the production of high-purity tall oil rosin and fatty acids is fairly recent. Modern fractionation techniques yield fatty acids and rosins with very low cross-product contamination.

Subcategory E - Essential Oils

Plants included under Subcategory E are those manufacturing essential oils, which consist of terpenes, hydrocarbons, alchols, or ketones. Most essential oils are insoluble in water and are volatile enough to be recovered by distillation.

Subcategory F - Rosin Derivatives

Plants included under Subcategory F are those which manufacture the rosin derivatives: esters, adduct modified esters, and alkyds. These are produced by chemical reactions involving rosins, monohydric or polyhydric alcohol, and chemical modifiers. Most of the rosins produced in the United States are actually rosin derivatives and modified derivative products. That is, the rosins are modified to eliminate undesirable properties and to enhance their application in many manufacturing processes.

Process Descriptions

The following pages in this section contain a profile of the findings made during field surveys of the gum and wood chemicals manufacturing point source category. The profiles contain typical process flow schematic diagrams, grouped according to the proposed subcategorization of the manufacturers.

Subcategory A - Char and Charcoal Briquets

Char or charcoal is produced by the carbonization of wood, which is the thermal decomposition of the raw wood. The product yield and purity are a function of the kiln temperature. Above 270°C, exothermic reactions set in, and the process can be self-sustaining with the rate of carbonization normally controlled by limiting the air feed to the kiln. Higher temperature reactions produce a higher carbon content product but reduce the product yield. During the decomposition of the wood, distillates are formed and leave the kiln with the flue gases. The condensable distillates are collectively referred to as pyroligneous acid, which contains methanol, acetic acid, acetone, tars, oils, and water. These materials have steadily declined in economic importance because of cheaper methods of producing synthetic substitutes; therefore, most plants have discontinued recovery of the by-products from the pyroligneous acid. Instead, the distillate and other flue gases are fed to an afterburner for thermal destruction before the flue gases are exhausted to the atmosphere. The condensable distillates may also be recycled as fuel for the kiln or recycled in the vapor phase as a fuel supply supplement. The non-condensable gases contain CO_2, CO, CH_4, H_2 and some higher hydrocarbons. The composition of the gases depends on the distillation temperature.

A typical flow diagram for char and charcoal briquets manufacturing is illustrated in Figure IV-1. During this study, no facilities which recovered distillation by-products were known to exist in the United States. The kiln depicted in Figure IV-1 is loaded with a payloader. After the kiln is loaded, the wood is set afire and allowed to burn under controlled conditions for approximately 72 hours. The air for oxidation is then cut off and water injected in the kiln for quenching. Approximately 18 hours is required for the material to cool down; afterwards, it is removed by a payloader. Pine wood char is sold at this point in the process to fill specialized orders. Hardwood char is ground, then blended with starch binder and water for feed to the briqueting operation. The resulting briquets are dried and packaged in bags for sale.

The off gases from the furnaces contain compounds such as acetic acid, methanol, acetone, tars, and oils. These materials are presently oxidized in the afterburners. The natural gas fuel required for the afterburners is a significant operating cost. An alternative emission control is now under consideration, in which off gases from the furnace would be scrubbed to remove the condensables from

FIGURE IV -2.

GUM ROSIN AND TURPENTINE PRODUCTION

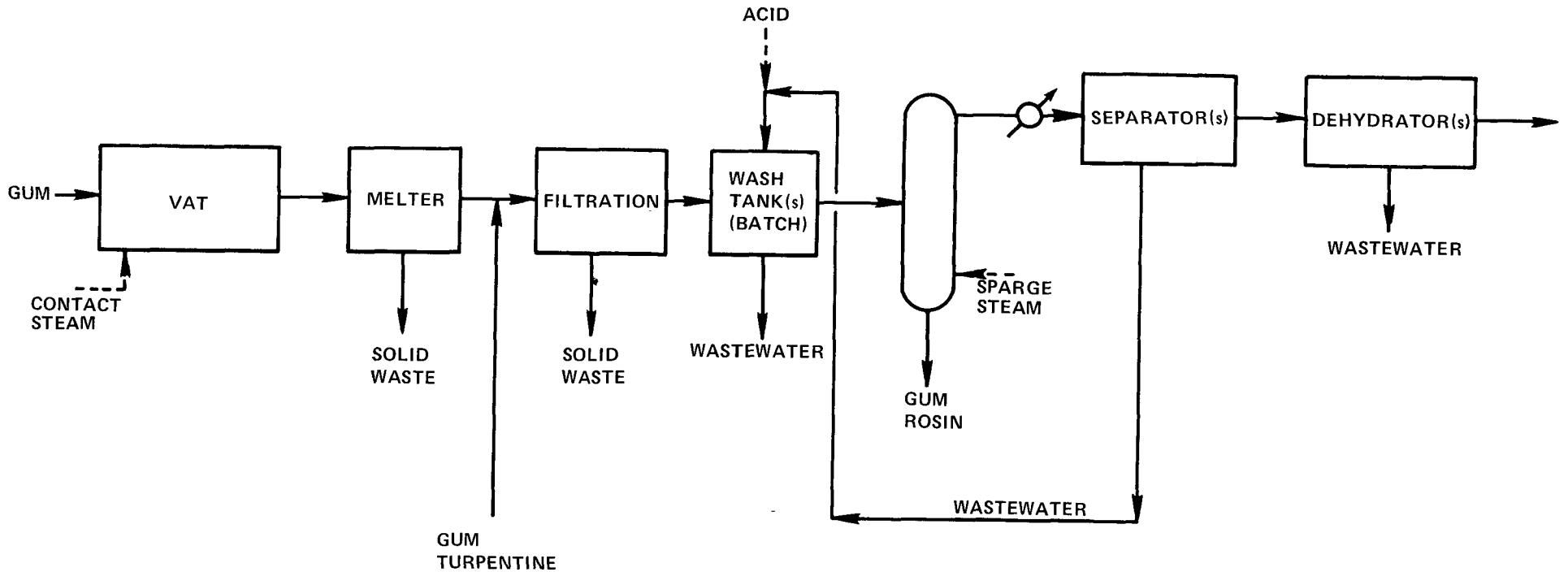

the flue gases. The resulting scrubber liquor would be sent to a separator where the pyroligneous acid could be recovered. The water and soluble compounds would be reused in the scrubber system. The separated products can then be recovered for sale or used as an auxiliary fuel.

Subcategory B - Gum Rosin and Turpentine

Figure IV-2 illustrates a process flow schematic for the manufacture of gum rosin and turpentine. The crude gum raw material is obtained by gum farmers who collect the gum from scarified longleaf and slash pine trees. The plant receives raw crude gum from the gum farmers in 435-lb barrel shipments. These shipments contain some dirt, water, leaves, bark, and other miscellaneous trash. Gum is emptied into a vat by inverting the crude gum containers over a high-pressure steam jet. The melter liquefies the crude gum material, and recycled turpentine is added to reduce the viscosity. This mixture is filtered through a pressure filter and collected. The trash is periodically removed and hauled to a landfill. The filtered gum is then washed with water. Because iron and calcium causes gum rosin to discolor at high temperature, a small amount of oxalic acid may be added to the wash water to precipate the iron and calcium as an insoluble oxalate. The wash water removes soluble acids and oxalate precipitate, and is then discharged for treatment. The prepared crude gum material is then distilled to separate the turpentine.

Non-contact shell-and-tube steam heating and sparging steam are used in the stills. Turpentine and water are distilled overhead and condensed with shell-and-tube condensers. The water is separated from the turpentine in the downstream receivers as shown in Figure IV-2. The turpentine product is dried with a sodium chloride salt dehydrator, and the gum rosin is removed from the still after each batch distillation in a fluid state and packaged.

Subcategory C - Wood Rosin, Turpentine, and Pine Oil

The raw material for this process is stumps obtained from the cut over pine forests of the southern United States. The stumps are uprooted by bulldozers and freighted to the extraction plant on railroad flat cars.

Figure IV-3 is a flow schematic diagram of the solvent extraction/ steam distillation plant which was surveyed.

The pine stumps from 40- to 60-year-old longleaf pine trees are brought into the plant. The stumps are placed on a

FIGURE IV -3

WOOD ROSIN, PINE OIL, AND TURPENTINE PRODUCTION VIA SOLVENT EXTRATION

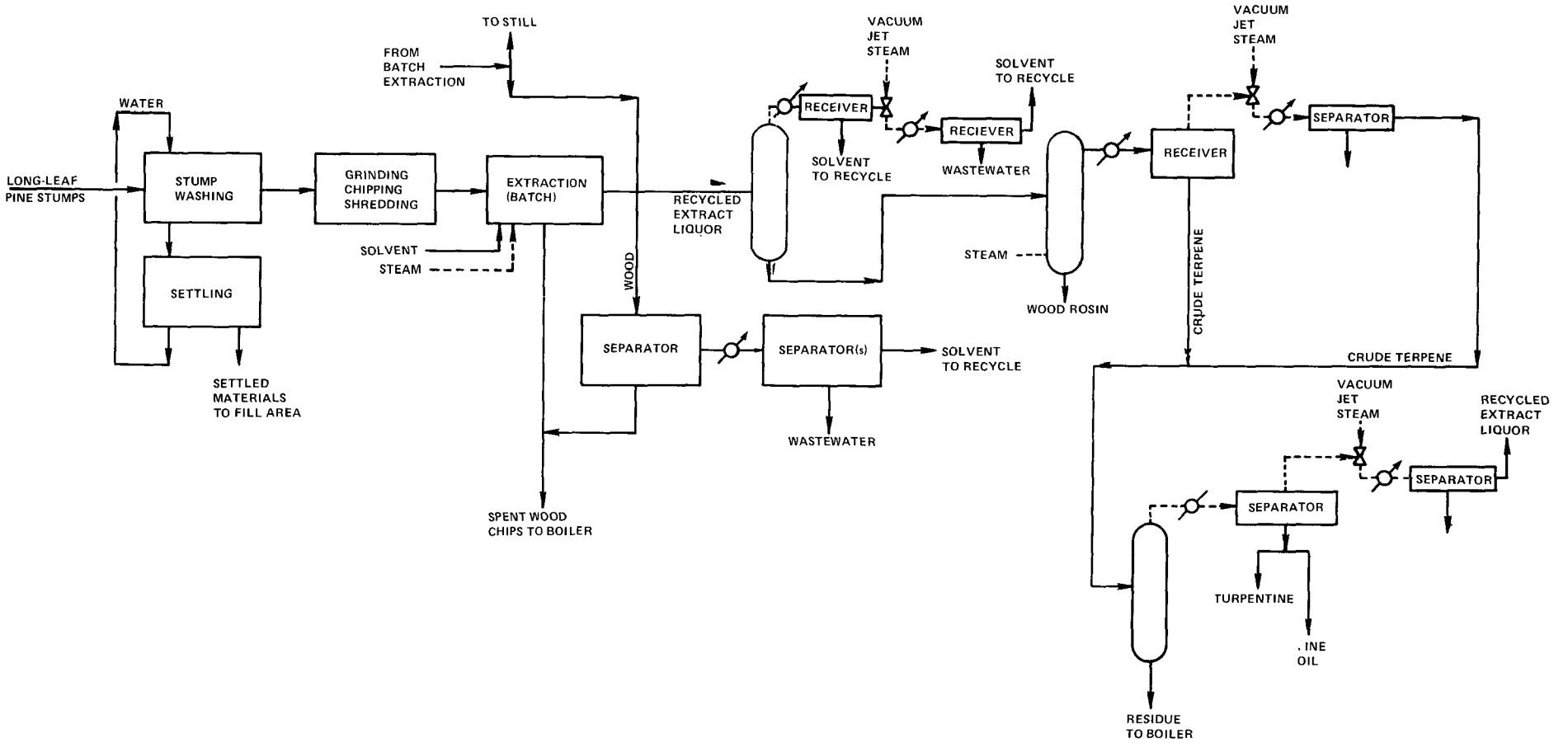

4/30/76

conveyor and are washed with 1,000 gpm of water at a pressure of approximately 110 psi. The water and dirt flow to a settling pond where the dirt settles out and the water is recycled back to the washing operation. The accumulated dirt is periodically removed to landfill. Wood hogs, chippers and shredders mechanically reduced the wood stumps in size in a sequence operation until they become chips approximately 2" in length and 1/16" thick. These chips are placed into intermediate storage. The wood chips are fed to a battery of retort extractors. The extraction process is accomplished in sequential steps as follows:

1. Water is removed from the chips by azeotropic distillation with a water-immiscible solvent.
2. The resinous material is extracted from the wood chips with a water-immiscible solvent.
3. Residual solvent is removed from the spent wood chips by steaming.

After the final step, the spent wood chips are removed from the retort and sent to the boilers as fuel. During steps 1 and 3, the steam solvent azeotrope from the retorts proceeds to an entrainment separator. Any entrained wood fines coming from the retorts are removed in the entrainment separator and are used in the furnace as fuel. The vapors from the entrainment separator are condensed and proceed to one or more separators where the solvent-water mixture separates. The solvent is recycled for use in the retorts.

The extract liquor leaving the retorts during step 2 is placed into intermediate storage tanks prior to further processing. The contents of these tanks are sent to a distillation column to separate the solvent from the products. The column is operated under vacuum conditions maintained by a steam-jet ejector. The overhead from the column is condensed and enters a separator where condensed solvent is removed and recycled to the retorts. The vapor phase from the separator, along with the steam from the ejector, is condensed in a shell-and-tube exchanger and enters a separator. Here the remaining solvent and the condensed steam from the ejector are separated. The solvent is sent to recycle and water to treatment.

The bottoms stream from the first distillation column enters a second distillation column, also operated under vacuum, as shown in Figure IV-3. Steam is introduced into the bottom of the tower to strip off the volatile compounds. This overhead stream enters a condenser and separator. A portion of the condensed liquor phase is refluxed back to the distillation column, while most of it is stored as crude

FIGURE IV -4

CRUDE TALL OIL FRACTIONATION AND REFINING

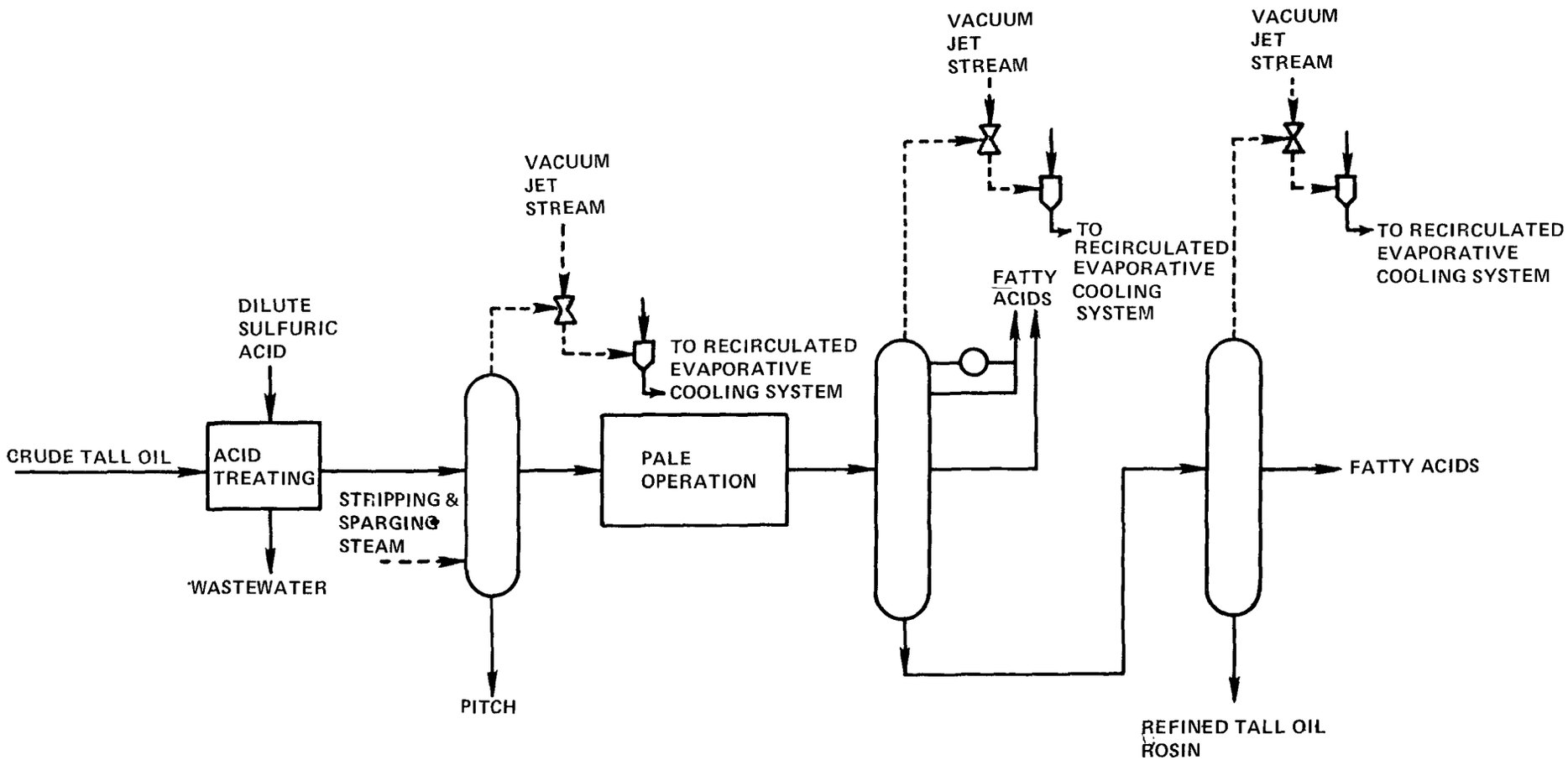

terpene for further processing. The steam from the vacuum ejector and the vapor phase from the separator are condensed in a shell-and-tube exchanger and then sent to a separator. The non-aqueous phase from the separator is stored as crude terpene while the aqueous phase is removed as wastewater. The bottom stream from this second distillation column is the finished wood rosin product.

The crude terpene, which has been removed in the second distillation column, is stored until a sufficient quantity has been accumulated, then this material is processed in a batch distillation column. The distillation column is charged with the crude terpene material, the overhead vapors are condensed in a shell-and-tube exchanger, and the condensed material enters a separator. The turpentine and pine oil products are removed from this separator while the vapors and the steam from the steam ejector enter a second shell-and-tube exchanger and proceed to a separator. The non-aqueous phase from the separator is recycled to the extract liquor storage while the aqueous phase is sent to wastewater treatment. The bottom from this batch distillation column is a residue containing high-boiling-point materials, best described as pitch. This residue is used for fuel.

Subcategory D - Tall Oil Rosin, Fatty Acids, and Pitch

Technology for the production of high-purity tall oil rosin and fatty acids is relatively recent compared to the age of the wood and gum rosin manufacture. The first commercial fractionation process was completed in 1949 by Arizona Chemical. The Arizona plant employed partial vacuum distillation techniques used in the petroleum refining industry and adapted to protect the integrity of tall oil's heat-sensitive constitutents.

Modern fractionation techniques yield fatty acids which contain less than 2 percent rosin and rosins which contain less than 3 percent fatty acids. Distillation techniques employed prior to the current fractionation technology employed steam distillation which produced rosin and fatty acid products with relatively high cross-product contamination.

The plant surveyed during this study employed modern fractionation distillation techniques. A schematic process flow diagram of this crude tall oil (CTO) fractionation process is presented in Figure IV-4.

FIGURE IV -5

DISTILLATION AND REFINING OF ESSENTIAL OILS

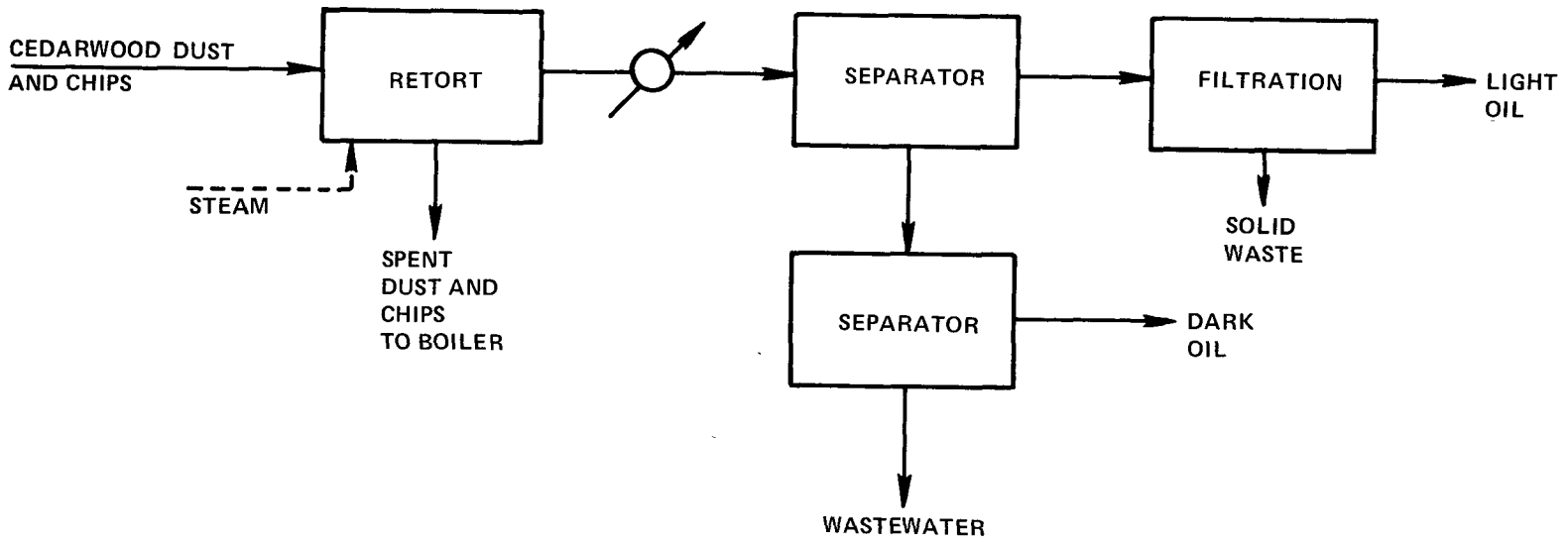

The plant fractionates CTO to produce approximately 20 percent pitch, 49 percent fatty acids, and 31 percent rosin. In addition, part of the plant's pitch and rosin production is used captively for the production of paper sizes. No wastewater discharges were observed coming from this unit during the survey period.

The CTO is treated with dilute sulfuric acid to remove some residual lignins plus mercaptans, disulfides, and color materials. Acid wash water goes to the process sewer. The CTO then proceeds to the fractionation process. In the first fractionation column, the pitch is removed from the bottoms and is either sold, saponified for production of size, or burned in boilers to recover its fuel value. The remaining fraction of the tall oil (rosin and fatty acid) then proceeds to the pale plant, where the quality of the raw material is improved through the removal of unwanted materials such as color bodies. The second column in Figure IV-4 separates low-boiling point fatty acid material while the third column completes the separation of fatty and rosin acids.

Barometric contact condensers are employed to condense the vacuum-jet steam. The recirculated barometric contact water is cooled by a holding reservoir, while light-separable organics are removed by means of an induced draft cooling tower. This contact condenser water recirculation system produces little, if any, discharge of wastewater, and therefore is considered exemplary technology. Once-through cooling water is used in non-contact column reflux and product heat exchangers.

Subcategory E - Essential Oils

Figure IV-5 is a process flow schematic diagram for steam distillation of cedarwood oil from scrap wood fines of red cedar.

Raw dry dust from the planing mill and raw grain dust from the sawmill are mixed to obtain the desired blend and then fed pneumatically to mechanical cyclone separators which are located on top of the retorts. At the time of our visit, fugitive dust escaping from the cyclones was visible. For purposes of establishing a proposed raw waste loading (RWL) it is anticipated that these emissions could be controlled by more efficient cyclone separators. After loading, the extraction of oil of cedarwood is accomplished by injecting steam directly into the retort as shown in Figure IV-5. The steam diffuses through the cedarwood dust, extracting the

FIGURE IV -6

ROSIN DERIVATIVES MANUFACTURE

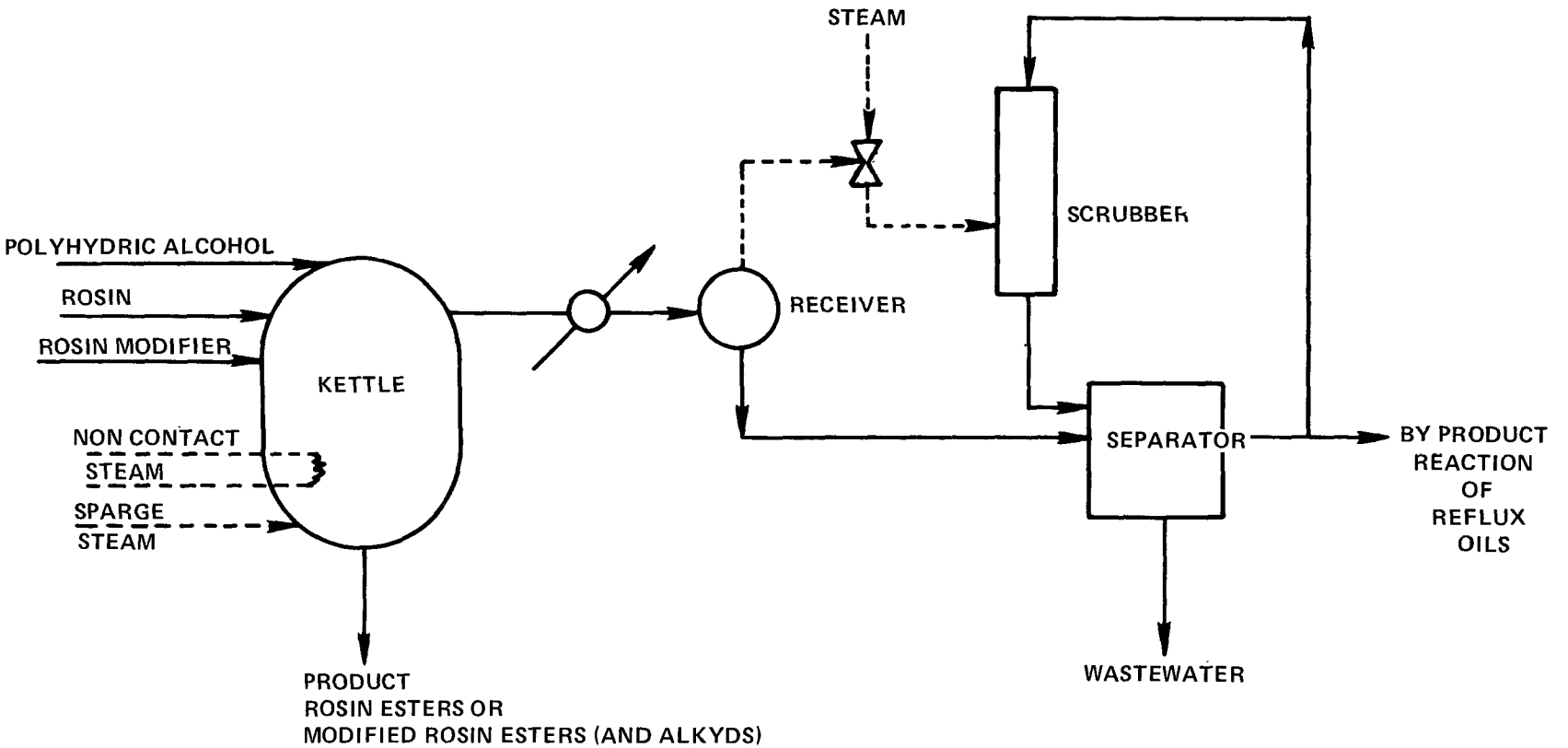

oil of cedarwood, exits through the top of the retort, and is condensed to an oil/water mixture.

Following the steam extraction, the spent sawdust is allowed to cool for approximately two hours. The spent sawdust is then conveyed to storage from where it is eventually fed as fuel to the steam generators.

The primary product is a crude light oil which is separated by two oil/water separators immediately downstream of the condensers. The light oil is removed and mixed with clay. The clay lightens the product by removing color bodies and stabilizes the color of the product by inhibiting further oxidation. The clay/oil slurry is filtered through plate and frame pressure presses and the spent clay filter material is hauled to landfill for final disposal. The lightened oil product proceeds to bulk storage, blending, and is finally drummed for shipment.

The water phase, which is separated in the stillwells, contains a heavy red crude oil. This material is separated from the water phase in three settling tanks in series. The heavy red oil is periodically removed and drummed for sale as a co-product, while the underflow, or remaining water phase, is discharged as wastewater.

The cedarwood oil process has been described and the operation is representative of this category for production of other essential oil products.

Subcategory F - Rosin Derivatives

Most of the rosins produced in the United States are actually rosin derivatives. Prior to the development of rosin derivatives rosin was used in the production of printing inks, linoleum, varnishes, electrical insulation, foundry core oils, leather, matches, adhesives, masonry, and solder fluxes. Rosins have some undesirable properties which include a tendency to crystallize from the solvents employed, oxidation of the unsaturated chemical bonds, and reaction with heavy metal salts. Rosin derivative manufacturing has modified the various rosins to eliminate these undesirable properties and to enhance their application in the foregoing areas of application and other new areas.

During this study, two facilities which manufactured rosin derivatives were surveyed. Plant No. 1 was producing wood rosin ester and a phenolic modified tall oil ester during the survey. Plant No. 2 produces tall oil and gum rosin

based esters of maleic anhydride, fumaric acid, substituted phenolic, and other modified rosin based esters, as well as glycerol phthalate alkyd. Historical data on the manufacture were used, along with survey data, to determine RWL's.

It should be noted that there are many rosin-derivative manufacturing processes which were not included in the study. Those processes which were not surveyed include: isomerization, oxidation, hydrogenation, dehydrogenation, polymerization, salt formation, and decarboxylation.

Figure IV-6 illustrates the process at Plant No. 2. The processes at Plant No. 1 are similar, except that the vacuum jet steam is exhausted to the atmosphere and the process wastewater is discharged from the receiver without separation.

Process operating conditions in the reaction kettle are dependent on many variables, such as product specification and raw materials. For example, at Plant No. 1 a simple ester is produced from stump wood rosin (WW grade) and U.S.P. glycerin. The esterification reaction takes place under high-temperature vacuum conditions. During the process, a steam sparge (lasting approximately 2-3 hours) is used to remove excess water of esterification, which allows completion of the reaction and removes fatty acid impurities for compliance with product specifications. The condensable impurities are condensed in a non-contact condenser on the vacuum leg and stored in a receiver. Non-condensables escape to the atmosphere through the reflux vent and steam vacuum jets. Plant No. 1 also produces phenol and maleic anhydride-modified tall oil rosin esters. The process operation is very similar to simple rosin ester production except that steam sparging is seldom if ever used, and other polyhydric alcohols may be used in the product formulation.

Plant No. 2 produces rosin-based esters of maleic anhydride, fumaric acid, substituted phenolic, and other modified rosin-based esters, as well as a glycerol phthalate alkyd. Kettle cook times and pressure conditions vary with type of product. No contact sparge steam is used except for the production of resins to be used in hot melt adhesives and chewing gum products, in which case steam sparge is used at the end of the cook to remove lights and odors. Unwanted materials, such as fatty acids, water of esterification, and sparge steam, are removed from the kettle by means of the vacuum leg. Condensable materials are condensed in a non-contact condenser and separated from the non-condensables in the receiver. Separable materials, such as fatty acids and

reaction and reflux oils, are separated from the process wastewaters in the separator. Vacuum jet steam and most non-condensable materials are removed in a scrubber which uses a recirculated oil stream from the separator. The oils are recovered for a secondary market.

SECTION V

WASTE CHARACTERIZATION

General

This section is intended to describe and identify the water usage and wastewater flows in individual processes in the gum and wood chemicals manufacturing segment. After developing an understanding of the fundamental production processes and their inter-relationships in each subcategory, a determination was made of the best method of characterizing each manufacturer's discharges which would enhance the interpretation of the manufacturer's water pollution profile. If unit raw waste loads could be developed for each production process within a segment, then the current effluent wastewater profile could be obtained by simply adding the components, and future profiles by projecting the types and sizes of the manufacturing operation.

Gum and Wood Chemicals

The process RWL data for the six subcategories in the gum and wood chemicals manufacturing point source category are presented individually in the following text. Subsequent discussions in these section will relate these data to the total data base for gum and wood chemicals, and compare waste loadings and concentrations among subcategories.

Subcategory A - Char and Charcoal Briquets

There are no wastewater discharges from the process operations in subcategory A. For the operation as it is described in Section IV, Figure IV-1, it is anticipated that stormwater runoff would carry suspended solids loadings. However, much of the dust problem and suspended solids loading in stormwater runoff could be controlled by alternate materials handling systems. For example, buggies could be used to transport the materials without the need for rehandling and thereby eliminate excessive fines production. Furthermore, it is anticipated that no wastewater will be generated by the recovery of condensable by-products in the proposed recovery operation. In fact, this recovery (air pollution control) operation should be an additional water consumer because of evaporative losses.

Table V -1

BPCTCA Process Raw Waste Loads

Subcategory	Product	Flow L/kkg Product (gal/1,000 lbs.)	BPCTCA Process Raw Waste Load BOD5 kg/kkg[1]	BOD5 mg/L	COD kg/kkg[1]	COD mg/L	TOC kg/kkg[1]	TOC mg/L
A	Char and Charcoal Briquets		No Discharge of Process Wastewater Pollutants					
B	Gum Rosin and Turpentine	528 (63.4)	4.44	8,410	8.40	15,900	2.86	5,420
C	Wood Rosin, Turpentine, and Pine Oil	9,470 (1,140)	6.49	685	12.6	1,330	4.14	437
D	Tall Oil Rosin, Pitch, and Fatty Acids	4,860 (583)	3.11	640	7.08	1,460	1.58	325
E	Essential Oils	62,100 (7,450)	70.8	1,140	86.9	1,400	24.8	400
F	Rosin Derivatives	309 (37)	4.40	14,200	8.58	27,800	3.29	10,600

[1] kg/kkg product is equivalent to lbs/1,000 lbs. production

Based on the above observation, it can be concluded that charcoal production and hardwood distillation can be operated with no discharge of process wastewater pollutants.

Subcategory B - Gum Rosin and Turpentine

In the manufacturing processes for gum rosin and turpentine as they are depicted in Figure IV-2, there are three possible sources of process wastewaters: crude gum wash wastewater, still condensate and dehydration brine. Plant No. 55 recycled the still condensate back into the process to wash the crude gum stock. Despite the recycled wastewater stream, plant No. 55's RWL's were much higher than plant No. 52's RWL's, as the following tabulation shows:

	Flow (l/kkg)	BOD5 kg/kkg	COD kg/kkg	TOC kg/kkg
Plant No. 55				
Historical Data	648	8.11	15.47	
Survey Data	742	4.39	8.29	3.06
Weighted Average	653	7.88	15.0	
Plant No. 52	402	0.99	1.79	0.33
Subcategory II Average	528	4.44	8.40	

The historical RWL data reported for Plant No. 55 represented the average of 31 pieces of data while the survey RWL data were developed from 2 composite samples. The weighted average RWL reported for Plant No. 55 was developed using the size of the respective data bases as the weighting factor.

The disparity of the RWL's was discussed with personnel from both plants. These discussions uncovered several small differences in operation between the two plants:

1. Plant No. 52 uses much less wash water than Plant No. 55 (106 L/kkg vs. 695 L/kkg).
2. Plant No. 52 treats the crude gum with oxalic acid in the melter vat and probably removes much of the insoluble oxalate salt in the filtration process as a solid waste.
3. Plant No. 55 uses greater quantities of oxalic acid. However, because small quantities are

involved and because oxalic acid is a highly oxidized compound, it is estimated that items 2 and 3 would account for less than 0.2 lbs BOD/1,000 lbs product.

It is obvious from the above that a substantial portion of the raw waste load and flow observed in this subcategory can be prevented by careful in-process control of the washing cycle. Proper control in this step will aid greatly in attaining the limitations imposed by regulation of this subcategory.

Subcategory C - Wood Rosin, Turpentine, and Pine Oil

The manufacturing processes for wood rosin, turpentine, and pine oil illustrated in Figure IV-3 produce no wastewater discharge from stump washing. The water used is totally recycled after solids settle out. The solids are periodically removed to landfill. The process wastewater includes stripping, vacuum jet steam condensates, and unit washdown wastewaters. The pertinent RWL's were observed to be:

Flow (L/kkg)	BOD5 kg/kkg	COD kg/kkg	TOC kg/kkg
9,470	6.49	12.6	4.14

These data were obtained at plant 54 and represent survey data.

Subcategory D - Tall Oil Rosin, Pitch, and Fatty Acids

Figure IV-4, which depicts the fractionation and refining of crude tall oil, indicates that the sources of process wastewater include the acid treatment and overflow, if any, from the recirculated evaporative cooling system. Additional process loads are contributed by process washdowns and quality control laboratory wastes. The plant's control of contact cooling water by means of the recirculated evaporative cooling system is considered exemplary for crude tall oil processing manufacture. Discussions with plant operating personnel revealed that separable organics which float to the top of the recirculation system's reservoir are recovered and recycled through the process and that a net water makeup is usually required to maintain a certain level in the reservoir. No overflow from the reservoir was observed during the survey and it is assumed that this is a normal operating condition. Sources of normal makeup to the reservoir would be vacuum-

jet steam, stripping steam condensates, and rainfall on the pond.

During the survey substantial contamination of the once-through, non-contact condenser cooling water was observed. Based on in-plant sampling performed during the survey, it was determined that part of the contamination was due to leaks in the shell-and-tube condensers on the fractionation columns, and the remainder of the concentration was due to an accidental leak or cross-connection between the barometric contact condenser and the non-contact cooling systems. In addition, numerous sources of other non-contact cooling water and steam condensate were observed to be discharging to a combined sewer system.

To determine the RWL for the CTO refining and fractionation units, the plant's total wastewater was measured and sampled for a continuous 24-hour period. Concurrent grab composite samples were taken in-plant to determine the accidental contamination of once-through cooling water by faulty equipment, and this loading was subtracted from the plant's total effluent load. The flow RWL was computed to be 19,400 L/kkg. However, based on our understanding of the process, discussions with manufacturing representatives, and the fact that large amounts of water were used at the plant, but unaccounted for, it was estimated that approximately 25 percent of the 19,400 L/kkg flow RWL represented contaminated wastewater. Its source, as discussed previously, was the acid-treating unit, process washdowns, and discharges from the quality control laboratory. The remaining portion of the flow RWL was classified as non-contact waters and therefore not included. The previous segregation of non-contact waters did not affect the BOD, COD, or TOC RWL data but merely affected the RWL concentration.

Based on the above discussion, the pertinent RWL's for Subcategory D are:

Flow (L/kkg)	BOD5 kg/kkg	COD kg/kkg	TOC kg/kkg
4,860	3.11	7.08	1.58

Subcategory E - Essential Oils

The steam used for each batch extraction of oil of cedarwood yields a contaminated condensate. This represents the only process wastewater discharge from essential oils manufacture, and its RWL's are:

Table V -2

Miscellaneous Raw Waste Load Data

RWL	Subcategory B - Gum Rosin and Turpentine	Subcategory C - Wood Rosin, Turpentine and Pine Oil	Subcategory D - Tall Oil Rosin, Pitch and Fatty Acids	Subcategory E - Essential Oils	Subcategory F - Rosin Derivatives
Flow					
L/kkg	528	9,470	4,860	62,100	309
TSS					
mg/L	265	31	Negative[1]	6	52
kg/kkg	0.140	0.29	Negative[1]	0.37	0.016
TDS					
mg/L	3,640	702	654	55	7480
kg/kkg	1.92	6.65	3.18	3.41	2.31
Oil					
mg/L	441	50	325	0.5	356
kg/kkg	0.233	0.47	1.58	0.03	0.11
Acidity					
mg/L	2,610	11	82.	593	841
kg/kkg	1.38	0.10	0.40	36.8	0.26
Alkalinity					
mg/L	--	192	300	--	--
kg/kkg	--	1.82	1.46	--	--
TKN-N					
mg/L	22.7	4.2	--	8.4	12.9
kg/kkg	0.012	0.04	--	0.52	0.004
NH_3-N					
mg/L	9.5	0.11	--	.16	19.4
kg/kkg	0.005	0.001	Negative[1]	0.01	0.006
NO_3-N					
mg/L	Interference	--	3.23	0.23	0.06
kg/kkg	--	--	0.0157	0.014	0.00002
T-P					
mg/L	2.3	0.4	--	0.01	0.7
kg/kkg	0.0012	0.0036	Negative[1]	0.0006	0.00021
Color Units					
mg/L	210	93	40	--	--
kg/kkg	--	--	--	--	--
SO_4					
mg/L	254	150	132	1.0	12.9
kg/kkg	0.134	1.42	0.64	0.06	0.004
Phenol					
mg/L	0.68	0.21	20.5	0.31	61.5
kg/kkg	0.00036	0.002	0.10	0.019	0.019
Ca					
mg/L	56.8	132	3.29	0.5	42.1
kg/kkg	0.030	1.25	0.016	0.03	0.0130
Mg					
mg/L	3.0	14.8	--	0.10	9.06
kg/kkg	0.0016	0.14	Negative[1]	0.006	0.0028
Cn					
mg/L	0.03	--	--	--	--
kg/kkg	--	--	--	--	--
Zn					
mg/L	15.9	0.25	--	--	6.8
kg/kkg	0.0082	0.0024	--	--	0.0021
Cl					
mg/L	189	18.0	2.1	2.2	17.8
kg/kkg	0.10	0.17	0.01	0.14	0.055

[1] Background TSS contributions exceeded the net increase across the process, resulting in a negative TSS - RWL.

Flow (L/kkg)	BOD kg/kkg	COD kg/kkg	TOC kg/kkg
62,100	70.8	86.9	24.8

Subcategory F - Rosin Derivatives

Process wastewaters from the manufacture of rosin derivatives, by the process shown in Figure IV-6, include: water of reaction; sparge steam, if used; and vacuum jet steam. Non-contact cooling water is used in the kettle overhead condensers, and periodically on the kettle coils. The once-through cooling water was segregated from process wastewaters at both plants. Sample analyses confirm no pollutant pickup in the non-contact cooling water streams. Subcategory F RWL's are presented below:

	Flow (L/kkg)	BOD5 (kg/kkg)	COD (kg/kkg)	TOC (kg/kkg)
Plant No. 57	395	4.11	7.33	3.10
Plant No. 55				
Historical Data	214	4.59	9.64	
Survey Data	273	5.26	11.00	3.90
Weighted Average	222	4.68	9.83	
Subcategory F Av.	309	4.40	8.58	

The historical RWL data reported for plant No. 55 represented the average of 18 pieces of data, while the survey RWL data were developed from 3 composite samples. The weighted average RWL reported for plant No. 55 was developed using the size of the respective data bases as the weighting factor.

General Waste Characteristics

Table V-2 lists the BPT raw waste load values assigned to each subcategory. These values include the following parameters:

1. Contact process wastewater flow (liters/kkg of product)
2. BOD raw waste load (kg BOD/kkg of product)
3. COD raw waste load (kg COD/kkg of product)
4. TOC raw waste load (kg TOC/kkg of product)

Raw waste load data for all parameters analyzed in the field survey (except BOD5, COD and TOC) are presented in Table V-3.

For purposes of comparison, concentrations have been calculated for the BOD5 parameter by dividing the BOD5 loading by the corresponding contact process wastewater flow. Examination of these data indicates a variability in flows, loadings, and resulting concentrations.

It should be noted that the BOD5 concentrations shown are based on wastewaters coming directly from the process and do not necessarily represent the waste concentrations which a treatment plant would receive. If the plant manufactured a single product which generated concentrated wastes, these might be diluted with contaminated cooling water and steam condensate or other non-contact waters prior to biological treatment. In a multi-product plant, the concentrated wastewater might be diluted with less concentrated wastes from other processes.

SECTION VI

SELECTION OF POLLUTANT PARAMETERS

General

From review of NPDES permit applications for direct discharge of wastewaters from various industries grouped under gum and wood chemicals and examination of related published data, twelve parameters (listed in Table VI-1) were selected and examined for all industrial wastewaters during the field data collection program. All field sampling data are summarized in Supplement B. Supplement B includes laboratory analytical results, data from plants visited, RWL calculations, historical data, analysis of historical data, computer print-outs (showing flows, production, and pollutants, performance data on treatment technologies and effluent limitations calculations). Supplement A has design calculations, capital cost calculations, and annual cost calculations. Supplements A and B are available at the EPA Public Information Reference Unit, Room 2922 (EPA Library), Waterside Mall, 401 M Street, S.W., Washington, D.C., 20460.

The degree of impact on the overall environment has been used as a basis for dividing the pollutants into groups as follows:

Pollutants of significance.
Rationale for selection of pollutant parameters.
Pollutants of specific significance.

The rationale and justification for pollutant categorization within the foregoing groupings, as discussed herein, will indicate the basis for selection of the parameters upon which the actual effluent limitations guidelines were postulated for each industrial category. In addition, particular parameters have been discussed in terms of their validity as measures of environmental impact and as sources of analytical insight.

Pollutants observed from the field data that were present in sufficient concentrations so as to interfere with, be incompatible with, or pass with inadequate treatment through publicly owned treatment works are discussed in Section XII of this document.

Pollutants of Significance

Parameters of pollution significance for the gum and wood chemicals manufacturing point source category are BOD5, COD, TOC, and TSS.

BOD5, COD, and TOC have been selected as pollutants of significance because they are the primary measurements of organic pollution. In the survey of the industrial categories, almost all of the effluent data collected from wastewater treatment facilities were based upon BOD5, because almost all the treatment facilities were biological processes. If other processes (such as evaporation, incineration, or activated carbon) are utilized, either COD or TOC may be a more appropriate measure of pollution. In either case the COD parameter is highly reliable and rapidly measured.

Because historical data is not available for TOC, limitations will only be set for BOD5, COD and TSS.

Table VI-1

List of Parameters Examined

Acidity and Alkalinity-pH
Oil and Grease
Biochemical Oxygen Demand
Chemical Oxygen Demand
Total Organic Carbon
Total Suspended Solids
Phenols
Phosphorus
Zinc
Dissolved Solids
Nitrogen Compounds
Sulfates
Temperature

RATIONALE FOR THE SELECTION OF POLLUTANT PARAMETERS

I. Pollutant Properties

Acidity and Alkalinity - pH

Although not a specific pollutant, pH is related to the acidity or alkalinity of a waste water stream. It is not a linear or direct measure of either, however, it may properly be used as a surrogate to control both excess acidity and excess alkalinity in water. The term pH is used to describe the hydrogen ion - hydroxyl ion balance in water. Technically, pH is the hydrogen ion concentration or activity present in a given solution. pH numbers are the negative logarithm of the hydrogen ion concentration. A pH of 7 generally indicates neutrality or a balance between free hydrogen and free hydroxyl ions. Solutions with a pH above 7 indicate that the solution is alkaline, while a pH below 7 indicates that the solution is acid.

Knowledge of the pH of water or waste water is useful in determining necessary measures for corrosion control, pollution control, and disinfection. Waters with a pH below 6.0 are corrosive to water works structures, distribution lines, and household plumbing fixtures and such corrosion can add constituents to drinking water such as iron, copper, zinc, cadmium, and lead. Low pH waters not only tend to dissolve metals from structures and fixtures but also tend to redissolve or leach metals from sludges and bottom sediments. The hydrogen ion concentration can affect the "taste" of the water and at a low pH, water tastes "sour".

Extremes of pH or rapid pH changes can exert stress conditions or kill aquatic life outright. Even moderate changes from "acceptable" criteria limits of pH are deleterious to some species. The relative toxicity* to aquatic life of many materials is increased by changes in the water pH. For example, metalocyanide complexes can increase a thousand-fold in toxicity with a drop of 1.5 pH units. Similarly, the toxicity of ammonia is a function of pH. The bactericidal effect of chlorine in most cases is less as the pH increases, and it is economically advantageous to keep the pH close to 7.

---

*The term toxic or toxicity is used herein in the normal scientific sense of the word and not as a specialized term referring to section 307(a) of the Act.

Acidity is defined as the quantitative ability of a water to neutralize hydroxyl ions. It is usually expressed as the calcium carbonate equivalent of the hydroxyl ions neutralized. Acidity should not be confused with pH value. Acidity is the quantity of hydrogen ions which may be released to react with or neutralize hydroxyl ions while pH is a measure of the free hydrogen ions in a solution at the instant the pH measurement is made. A property of many chemicals, called buffering, may hold hydrogen ions in a solution from being in the free state and being measured as pH. The bond of most buffers is rather weak and hydrogen ions tend to be released from the buffer as needed to maintain a fixed pH value.

Highly acid waters are corrosive to metals, concrete and living organisms, exhibiting the pollutional characteristics outlined above for low pH waters. Depending on buffering capacity, water may have a higher total acidity at pH values of 6.0 than other waters with a pH value of 4.0.

Alkalinity: Alkalinity is defined as the ability of a water to neutralize hydrogen ions. It is usually expressed as the calcium carbonate equivalent of the hydrogen ions neutralized.

Alkalinity is commonly caused by the presence of carbonates, bicarbonates, hydroxides and to a lesser extent by borates, silicates, phophates and organic substances. Because of the nature of the chemicals causing alkalinity, and the buffering capacity of carbon dioxide in water, very high pH values are seldom found in natural waters.

Excess alkalinity as exhibited in a high pH value may make water corrosive to certain metals, detrimental to most natural organic materials and toxic to living organisms.

Ammonia is more lethal with a higher pH. The lacrimal fluid of the human eye has a pH of approximately 7.0 and a deviation of 0.1 pH unit from the norm may result in eye irritation for the swimmer. Appreciable irritation will cause severe pain.

Oil and Grease

Because of widespread use, oil and grease occur often in waste water streams. These oily wastes may be classified as follows:

1. Light Hydrocarbons - These include light fuels such as gasoline, kerosene, and jet fuel, and

miscellaneous solvents used for industrial processing, degreasing, or cleaning purposes. The presence of these light hydrocarbons may make the removal of other heavier oily wastes more difficult.

2. Heavy Hydrocarbons, Fuels, and Tars - These include the crude oils, diesel oils, #6 fuel oil, residual oils, slop oils, and in some cases, asphalt and road tar.

3. Lubricants and Cutting Fluids - These generally fall into two classes: non-emulsifiable oils such as lubricating oils and greases and emulsifiable oils such as water soluble oils, rolling oils, cutting oils, and drawing compounds. Emulsifiable oils may contain fat soap or various other additives.

4. Vegetable and Animal Fats and Oils - These originate primarily from processing of foods and natural products.

These compounds can settle or float and may exist as solids or liquids depending upon factors such as method of use, production process, and temperature of waste water.

Oils and grease even in small quantities cause troublesome taste and odor problems. Scum lines from these agents are produced on water treatment basin walls and other containers. Fish and water fowl are adversely affected by oils in their habitat. Oil emulsions may adhere to the gills of fish causing suffocation, and the flesh of fish is tainted when microorganisms that were exposed to waste oil are eaten. Deposition of oil in the bottom sediments of water can serve to inhibit normal benthic growth. Oil and grease exhibit an oxygen demand.

Levels of oil and grease which are toxic to aquatic organisms vary greatly, depending on the type and the species susceptibility. However, it has been reported that crude oil in concentrations as low as 0.3 mg/l is extremely toxic to fresh-water fish. It has been recommended that public water supply sources be essentially free from oil and grease.

Oil and grease in quantities of 100 l/sq km (10 gallons/sq mile) show up as a sheen on the surface of a body of water. The presence of oil slicks prevent the full aesthetic

enjoyment of water. The presence of oil in water can also increase the toxicity of other substances being discharged into the receiving bodies of water. Municipalities frequently limit the quantity of oil and grease that can be discharged to their waste water treatment systems by industry.

Oxygen Demand (BOD, COD, TOC and DO)

Organic and some inorganic compounds can cause an oxygen demand to be exerted in a receiving body of water. Indigenous microorganisms utilize the organic wastes as an energy source and oxidize the organic matter. In doing so their natural respiratory activity will utilize the dissolved oxygen.

Dissolved oxygen (DO) in water is a quality that, in appropriate concentrations, is essential not only to keep organisms living but also to sustain species reproduction, vigor, and the development of populations. Organisms undergo stress at reduced DO concentrations that make them less competitive and less able to sustain their species within the aquatic environment. For example, reduced DO concentrations have been shown to interfere with fish population through delayed hatching of eggs, reduced size and vigor of embryos, production of deformities in young, interference with food digestion, acceleration of blood clotting, decreased tolerance to certain toxicants, reduced food utilization efficiency, growth rate, and maximum sustained swimming speed. Other organisms are likewise affected adversely during conditions of decreased DO. Since all aerobic aquatic organisms need a certain amount of oxygen, the consequences of total depletion of dissolved oxygen due to a high oxygen demand can kill all the inhabitants of the affected aquatic area.

It has been shown that fish may, under some natural conditions, become acclimatized to low oxygen concentrations. Within certain limits, fish can adjust their rate of respiration to compensate for changes in the concentration of dissolved oxygen. It is generally agreed, moreover, that those species which are sluggish in movement (e.g.,carp, pike, eel) can withstand lower oxygen concentrations than fish which are more lively in habit (such as trout or salmon).

The lethal affect of low concentrations of dissolved oxygen in water appears to be increased by the presence of toxic substances, such as ammonia, cyanides, zinc, lead, copper, or cresols. With so many factors influencing the effect of

oxygen deficiency, it is difficult to estimate the minimum safe concentrations at which fish will be unharmed under natural conditions. Many investigations seem to indicate that a DO level of 5.0 mg/l is desirable for a good aquatic environment and higher DO levels are required for selected types of aquatic environments.

Biochemical oxygen demand (BOD) is the quantity of oxygen required for the biological and chemical oxidation of waterborn substances under ambient or test conditions. Materials which may contribute to the BOD include: carbonaceous organic materials usable as a food source by aerobic organisms; oxidizable nitrogen derived from nitrites, ammonia and organic nitrogen compounds which serve as food for specific bacteria; and certain chemically oxidizable materials such as ferrous iron, sulfides, sulfite, etc. which will react with dissolved oxygen or are metabolized by bacteria. In most industrial and municipal waste waters, the BOD derives principally from organic materials and from ammonia (which is itself derived from animal or vegetable matter).

The BOD of a waste exerts an adverse effect upon the dissolved oxygen resources of a body of water by reducing the oxygen available to fish, plant life, and other aquatic species. Conditions can be reached where all of the dissolved oxygen in the water is utilized resulting in anaerobic conditions and the production of undesirable gases such as hydrogen sulfide and methane. The reduction of dissolved oxygen can be detrimental to fish populations, fish growth rate, and organisms used as fish food. A total lack of oxygen due to the exertion of an excessive BOD can result in the death of all aerobic aquatic inhabitants in the affected area.

Water with a high BOD indicates the presence of decomposing organic matter and associated increased bacterial concentrations that degrade its quality and potential uses. A by-product of high BOD concentrations can be increased algal concentrations and blooms which result from decomposition of the organic matter and which form the basis of algal populations.

The BOD_5 (5-day BOD) test is used widely to estimate the pollutional strength of domestic and industrial wastes in terms of the oxygen that they will require if discharged into receiving streams. The test is an important one in water pollution control activities. It is used for pollution control regulatory activities, to evaluate the design and efficiencies of waste water treatment works, and

to indicate the state of purification or pollution of receiving bodies of water.

Complete biochemical oxidation of a given waste may require a period of incubation too long for practical analytical test purposes. For this reason, the 5-day period has been accepted as standard, and the test results have been designated as BOD5. Specific chemical test methods are not readily available for measuring the quantity of many degradable substances and their reaction products. Reliance in such cases is placed on the collective parameter, BOD5, which measures the weight of dissolved oxygen utilized by microorganisms as they oxidize or transform the gross mixture of chemical compounds in the waste water. The biochemical reactions involved in the oxidation of carbon compounds are related to the period of incubation. The five-day BOD normally measures only 60 to 80% of the carbonaceous biochemical oxygen demand of the sample, and for many purposes this is a reasonable parameter. Additionally, it can be used to estimate the gross quantity of oxidizable organic matter.

The BOD5 test is essentially a bioassay procedure which provides an estimate of the oxygen consumed by microorganisms utilizing the degradable matter present in a waste under conditions that are representative of those that are likely to occur in nature. Standard conditions of time, temperature, suggested microbial seed, and dilution water for the wastes have been defined and are incorporated in the standard analytical procedure. Through the use of this procedure, the oxygen demand of diverse wastes can be compared and evaluated for pollution potential and to some extent for treatability by biological treatment processes.

Because the BOD test is a bioassay procedure, it is important that the environmental conditions of the test be suitable for the microorganisms to function in an uninhibited manner at all times. This means that toxic substances must be absent and that the necessary nutrients, such as nitrogen, phosphorous, and trace elements, must be present.

Chemical oxygen demand (COD) is a purely chemical oxidation test devised as an alternate method of estimating the total oxygen demand of a waste water. Since the method relies on the oxidation-reduction system of chemical analyses rather than on biological factors, it is more precise, accurate, and rapid than the BOD test. The COD test is widely used to estimate the total oxygen demand (ultimate rather than 5-day BOD) to oxidize the compounds in a waste water. It is based

on the fact that organic compounds, with a few exceptions, can be oxidized by strong chemical oxidizing agents under acid conditions with the assistance of certain inorganic catalysts.

The COD test measures the oxygen demand of compounds that are biologically degradable and of many that are not. Pollutants which are measured by the BOD_5 test will be meausred by the COD test. In addition, pollutants which are more resistant to biological oxidation will also be measured as COD. COD is a more inclusive measure of oxygen demand than is BOD_5 and will result in higher oxygen demand values than will the BOD_5 test.

The compounds which are more resistant to biological oxidation are becoming of greater and greater concern not only because of their slow but continuing oxygen demand on the resources of the receiving water, but also because of their potential health effects on aquatic life and humans. Many of these compounds result from industrial discharges and some have been found to have carcinogenic, mutagenic and similar adverse effects, either singly or in combination. Concern about these compounds has increased as a result of demonstrations that their long life in receiving waters - the result of a slow biochemical oxidation rate - allows them to contaminate downstream water intakes. The commonly used systems of water purification are not effective in removing these types of materials and disinfection such as chlorination may convert them into even more hazardous materials.

Thus the COD test measures organic matter which exerts an oxygen demand and which may affect the health of the people. It is a useful analytical tool for pollution control activities. It provides a more rapid measurement of the oxygen demand and an estimate of organic compounds which are not measured in the BOD_5 test.

Total organic carbon (TOC) is measured by the catalytic conversion of organic carbon in a waste water to carbon dioxide. Most organic chemicals have been found to be measured quantitatively by the equipment now in use. The time of analyses is short, from 5 to 10 minutes, permitting a rapid and accurate estimate of the organic carbon content of the waste waters to be made by relatively unskilled personnel.

A TOC value does not indicate the rate at which the carbon compounds are oxidized in the natural environment. The TOC test will measure compounds that are readily biodegradable

and measured by the BOD_5 test as well as those that are not. TOC analyses will include those biologically resistant organic compounds that are of concern in the environment.

BOD and COD methods of analyses are based on oxygen utilization of the waste water. The TOC analyses estimates the total carbon content of a waste water. There is as yet no fundamental correlation of TOC to either BOD or COD. However, where organic laden waste waters are fairly uniform, there will be a fairly constant correlation among TOC, BOD and COD. Once such a correlation is established, TOC can be used as an inexpensive test for routine process monitoring.

Total Suspended Solids (TSS)

Suspended solids include both organic and inorganic materials. The inorganic compounds include sand, silt, and clay. The organic fraction includes such materials as grease, oil, tar, and animal and vegetable waste products. These solids may settle out rapidly and bottom deposits are often a mixture of both organic and inorganic solids. Solids may be suspended in water for a time, and then settle to the bed of the stream or lake. These solids discharged with man's wastes may be inert, slowly biodegradable materials, or rapidly decomposable substances. While in suspension, they increase the turbidity of the water, reduce light penetration and impair the photosynthetic activity of aquatic plants.

Suspended solids in water interfere with many industrial processes, cause foaming in boilers and incrustations on equipment exposed to such water, especially as the temperature rises. They are undesirable in process water used in the manufacture of steel, in the textile industry, in laundries, in dyeing, and in cooling systems.

Solids in suspension are aesthetically displeasing. When they settle to form sludge deposits on the stream or lake bed, they are often damaging to the life in water. Solids, when transformed to sludge deposits, may do a variety of damaging things, including blanketing the stream or lake bed and thereby destroying the living spaces for those benthic organisms that would otherwise occupy the habitat. When of an organic nature, solids use a portion or all of the dissolved oxygen available in the area. Organic materials also serve as a food source for sludgeworms and associated organisms.

Disregarding any toxic effect attributable to substances leached out by water, suspended solids may kill fish and shellfish by causing abrasive injuries and by clogging the gills and respiratory passages of various aquatic fauna. Indirectly, suspended solids are inimical to aquatic life because they screen out light, and they promote and maintain the development of noxious conditions through oxygen depletion. This results in the killing of fish and fish food organisms. Suspended solids also reduce the recreational value of the water.

Turbidity: Turbidity of water is related to the amount of suspended and colloidal matter contained in the water. It affects the clearness and penetration of light. The degree of turbidity is only an expression of one effect of suspended solids upon the character of the water. Turbidity can reduce the effectiveness of chlorination and can result in difficulties in meeting BOD and suspended solids limitations. Turbidity is an indirect measure of suspended solids.

Phenols

Phenols, defined as hydroxy derivatives of benzene and its condensed nuclei, may occur in domestic and industrial waste water and in drinking water supplies. Chlorination of such waters can produce odoriferous and objectionable tasting chlorophenols which may include o-chlorophenol, p-chlorophenol, and 2, 4-dichlorophenol.

Although described in the technical literature simply as phenols, the phenol waste category can include a wide range of similar chemical compounds. In terms of pollution control, reported concentrations of phenols are the result of a standard methodology which measures a general group of similar compounds rather than being based upon specific identification of the single compound, phenol (hydroxybenzene).

Phenols are used in some cutting oils and in the molding of plastics. Cutting fluids can contain phenolic compounds since these materials are normal constituents of hydrocarbon mixtures. In addition, phenolic compounds are added to oils as preservatives or for odor control. They also are found in the waste waters from the petroleum industry and from certain products of the organic chemical industry.

Phenolic compounds may adversely affect fish in two ways: first, by a direct toxic action, and second, by imparting a

taste to the fish flesh. The toxicity of phenol towards fish increases as the dissolved oxygen level is diminished, as the temperature is raised, and as the hardness is lessened. Phenol appears to act as a nerve poison causing too much blood to get to the gills and to the heart cavity and is reported to have a toxic threshold of 0.1 to .15 mg/l.

Mixed phenolic substances appear to be especially troublesome in imparting taste to fish flesh. Chlorophenol produces a bad taste in fish far below lethal or toxic doses. Threshold concentrations for taste or odor in chlorinated water supplies have been reported as low as 0.00001-0.001 mg/l. Phenols in concentrations of only one part per billion have been known to affect water supplies.

The ingestion of concentrated solutions of phenol by humans results in severe pain, renal irritation, shock, and possibly death. A total dose of 1.5 grams may be fatal. Phenols can be metabolized and oxidized in waste treatment facilities containing organisms acclimated to the phenol concentration in the wastes.

Phosphorus

Phosphorus occurs in natural waters and in waste waters in the form of various types of phosphate. These forms are commonly classified into orthophosphates, condensed phosphates (pyro-, meta-, and polyphosphorus), and organically bound phosphates. These may occur in the soluble form, in particles of detritus or in the bodies of aquatic organisms.

The various forms of phosphates find their way into waste waters from a variety of industrial, residential, and commercial sources. Small amounts of certain condensed phosphates are added to some water supplies in the course of potable water treatment. Large quantities of the same compounds may be added when the water is used for laundering or other cleaning since these materials are major constituents of many commercial cleaning preparations. Phosphate coating of metals is another major source of phosphates in certain industrial effluents.

The increasing problem of the growth of algae in streams and lakes appears to be associated with the increasing presence of certain dissolved nutrients, chief among which is phosphorus. Phosphorus is an element which is essential to the growth of organisms and it can often be the nutrient that limits the aquatic growth that a body of water can

support. In instances where phosphorous is a growth limiting nutrient, the discharge of sewage, agricultural drainage or certain industrial wastes to a receiving water may stimulate the growth, in nuisance quantities, of photosynthetic aquatic microorganisms and macroorganisms.

The increase in organic matter production by algae and plants in a lake undergoing eutrophication has ramifications throughout the aquatic ecosystem. Greater demand is placed on the dissolved oxygen in the water as the organic matter decomposes at the termination of the life cycles. Because of this process, the deeper waters of the lake may become entirely depleted of oxygen, thereby, destroying fish habitats and leading to the elimination of desirable species. The settling of particulate matter from the productive upper layers changes the character of the bottom mud, also leading to the replacement of certain species by less desirable organisms. Of great importance is the fact that nutrients inadvertently introduced to a lake are, for the most part, trapped there and recycled in accelerated biological processes. Consequently, the damage done to a lake in a relatively short time requires a many fold increase in time for recovery of the lake.

When a plant population is stimulated in production and attains a nuisance status, a large number of associated liabilities are immediately apparent. Dense populations of pond weeds make swimming dangerous. Boating and water skiing and sometimes fishing may be eliminated because of the mass of vegetation that serves as a physical impediment to such activities. Plant populations have been associated with stunted fish populations and with poor fishing. Plant nuisances emit vile stenches, impart tastes and odors to water supplies, reduce the efficiency of industrial and municipal water treatment, impair aesthetic beauty, reduce or restrict resort trade, lower waterfront property values, cause skin rashes to man during water contact, and serve as a desired substrate and breeding ground for flies.

Phosphorus in the elemental form is particularly toxic, and subject to bioaccumulation in much the same way as mercury. Colloidal elemental phosphorus will poison marine fish (causing skin tissue breakdown and discoloration). Also, phosphorus is capable of being concentrated and will accumulate in organs and soft tissues. Experiments have shown that marine fish will concentrate phosphorus from water containing as little as 1 ug/l.

Zinc (Zn)

Occurring abundantly in rocks and ores, zinc is readily refined into a stable pure metal and is used extensively as a metal, an alloy, and a plating material. In addition, zinc salts are also used in paint pigments, dyes, and insecticides. Many of these salts (for example, zinc chloride and zinc sulfate) are highly soluble in water; hence, it is expected that zinc might occur in many industrial wastes. On the other hand, some zinc salts (zinc carbonate, zinc oxide, zinc sulfide) are insoluble in water and, consequently, it is expected that some zinc will precipitate and be removed readily in many natural waters.

In soft water, concentrations of zinc ranging from 0.1 to 1.0 mg/l have been reported to be lethal to fish. Zinc is thought to exert its toxic action by forming insoluble compounds with the mucous that covers the gills, by damage to the gill epithelium, or possibly by acting as an internal poison. The sensitivity of fish to zinc varies with species, age, and condition, as well as with the physical and chemical characteristics of the water. Some acclimatization to the presence of the zinc is possible. It has also been observed that the effects of zinc poisoning may not become apparent immediately so that fish removed from zinc-contaminated to zinc-free water may die as long as 48 hours after the removal. The presence of copper in water may increase the toxicity of zinc to aquatic organisms, while the presence of calcium or hardness may decrease the relative toxicity.

A complex relationship exists between zinc concentrations, dissolved oxygen, pH, temperature, and calcium and magnesium concentrations. Prediction of harmful effects has been less than reliable and controlled studies have not been extensively documented.

Concentrations of zinc in excess of 5 mg/l in public water supply sources cause an undesirable taste which persists through conventional treatment. Zinc can have an adverse effect on man and animals at high concentrations.

Observed values for the distribution of zinc in ocean waters varies widely. The major concern with zinc compounds in marine waters is not one of actute lethal effects, but rather one of the long term sublethal effects of the metallic compounds and complexes. From the point of view of accute lethal effects, invertebrate marine animals seem to be the most sensitive organisms tested.

A variety of freshwater plants tested manifested harmful symptoms at concentrations of 10 mg/l. Zinc sulfate has also been found to be lethal to many plants and it could impair agricultural uses of the water.

Dissolved Solids

In natural waters, the dissolved solids are mainly carbonates, chlorides, sulfates, phosphates, and, to a lesser extent, nitrates of calcium, magnesium, sodium, and potassium, with traces of iron, manganese and other substances.

Many communities in the United States and in other countries use water supplies containing 2,000 to 4,000 mg/l of dissolved salts, when no better water is available. Such waters are not palatable, may not quench thirst, and may have a laxative action on new users. Waters containing more than 4,000 mg/l of total salts are generally considered unfit for human use, although in hot climates such higher salt concentrations can be tolerated. Waters containing 5,000 mg/l or more are reported to be bitter and act as a bladder and intestinal irritant. It is generally agreed that the salt concentration of good, palatable water should not exceed 500 mg/l.

Limiting concentrations of dissolved solids for fresh-water fish may range from 5,000 to 10,000 mg/l, depending on species and prior acclimatization. Some fish are adapted to living in more saline waters, and a few species of fresh-water forms have been found in natural waters with a salt concentration of 15,000 to 20,000 mg/l. Fish can slowly become acclimatized to higher salinities, but fish in waters of low salinity cannot survive sudden exposure to high salinities, such as those resulting from discharges of oil-well brines. Dissolved solids may influence the toxicity of heavy metals and organic compounds to fish and other aquatic life, primarily because of the antagonistic effect of hardness on metals.

Waters with total dissolved solids (TDS) concentrations higher than 500 mg/l have decreasing utility as irrigation water. At 5,000 mg/l, water has little or no value for irrigation.

Dissolved solids in industrial waters can cause foaming in boilers and can cause interference with cleanliness, color, or taste of many finished products. High concentrations of dissolved solids also tend to accelerate corrosion.

Specific conductance is a measure of the capacity of water to convey an electric current. This property is related to the total concentration of ionized substances in water and to the water temperature. This property is frequently used as a substitute method of quickly estimating the dissolved solids concentration.

Nitrogen Compounds

Ammonia nitrogen (NH_3-N) and total Kjeldahl nitrogen (TKN) are two parameters which have received a substantial amount of interest in the last decade. TKN is the sum of the NH_3-N and organic nitrogen present in the sample. Both NH_3 and TKN are expressed in terms of equivalent nitrogen values in mg/l to facilitate mathematical manipulations of the values.

Organic nitrogen may be converted in the environment to ammonia by saprophytic bacteria under either aerobic or anaerobic conditions. The ammonia nitrogen then becomes the nitrogen and energy source for autotrophic organisms (nitrifiers). The oxidation of ammonia to nitrite and then to nitrate has a stoichiometric oxygen requirement of approximately 4.6 times the concentration of NH_3-N. The nitrification reaction is much slower than the carbonaceous reactions, and, therefore, the dissolved oxygen utilization is observed over a much longer period.

Ammonia is a common product of the decomposition of organic matter. Dead and decaying animals and plants along with human and animal body wastes account for much of the ammonia entering the aquatic ecosystem. Ammonia exists in its non-ionized form only at higher pH levels and is the most toxic in this state. The lower the pH, the more ionized ammonia is formed and its toxicity decreases. Ammonia, in the presence of dissolved oxygen, is converted to nitrate (NO_3) by nitrifying bacteria. Nitrite (NO_2), which is an intermediate product between ammonia and nitrate, sometimes occurs in quantity when depressed oxygen conditions permit. Ammonia can exist in several other chemical combinations, including ammonium chloride and other salts.

Infant methemoglobinemia, a disease characterized by specific blood changes and cyanosis, may be caused by high nitrate concentrations in the water used for preparing feeding formulae. While it is still impossible to state precise concentration limits, it has been widely recommended that water containing more than 10 mg/l of nitrate nitrogen (NO_3-N) should not be used for infants.

Nitrates are also harmful in fermentation processes and can cause disagreeable tastes in beer. In most natural water the pH range is such that ammonium ions (NH_4^+) predominate.

In streams polluted with sewage, up to one-half of the nitrogen in the sewage may be in the form of free ammonia, and sewage may carry up to 35 mg/l of total nitrogen. It has been shown that at a level of 1.0 mg/l non-ionized ammonia, the ability of hemoglobin to combine with oxygen is impaired and may cause fish to suffocate. Evidence indicates that ammonia exerts a considerable toxic effect on all aquatic life within a range of less than 1.0 to 25 mg/l, depending on the pH and dissolved oxygen level present.

Ammonia can add to the problem of eutrophication by supplying nitrogen through its breakdown products. Some lakes in warmer climates, and others that are aging quickly, are sometimes limited by the nitrogen available. Any increase will speed up the plant growth and decay process.

Sulfates

Sulfates occur naturally in waters, particulary in the western Unites States, as a result of leachings from gypsum and other common materials. They also occur as the final oxidized state of sulfides, sulfites and thiosulfates. Sulfates may also be present as the oxidized state of organic matter in the sulfur cycle, but they in turn, may serve as sources of energy for sulfate splitting bacteria. Sulfates may also be discharged in numerous industrial wastes, such as those from tanneries, sulfate-pulp mills, textile mills, and other plants that use sulfates or sulfuric acid.

In moderate concentrations, sulfates are not harmful and it has been reported that concentrations up to 1000 mg/l are harmless. Irrigation concentrations less than 336 mg/l are considered to be good to excellent.

Temperature

Temperature is one of the most important and influential water quality characteristics. Temperature determines what species may be present; it activates the hatching of young, regulates their activity, and stimulates or suppresses their growth and development; it attracts, and may kill when the water becomes too hot or becomes chilled too suddenly. Colder water generally suppresses development. Warmer water generally accelerates activity and may be a primary cause of

aquatic plant nuisances when other environmental factors are suitable.

Temperature is a prime regulator of natural processes within the water environment. It governs physiological functions in organisms and, acting directly or indirectly in combination with other water quality constituents, affects aquatic life with each change. These effects include chemical reaction rates, enzymatic functions, molecular movements, and molecular exchanges between membranes within and between the physiological systems and the organs of an animal.

Chemical reaction rates vary with temperature and generally increase as the temperature is increased. The solubility of gases in water varies with temperature. Dissolved oxygen is decreased by the decay or decomposition of dissolved organic substances, and the decay rate increases as the temperature of the water increases, reaching a maximum at about 30°C (86°F). The temperature of stream water, even during summer, is below the optimum for pollution-associated bacteria. Increasing the water temperature increases the bacterial multiplication rate when the environment is favorable and the food supply is abundant.

Reproduction cycles may be changed significantly by increased temperature because this function takes place under restricted temperature ranges.

Spawning may not occur at all when temperatures are too high. Thus, a fish population may exist in a heated area only by continued immigration. Disregarding the decreased reproductive potential, water temperatures need not reach lethal levels to decimate a species. Temperatures that favor competitors, predators, parasites, and disease can destroy a species at levels far below those that are lethal.

Fish food organisms are altered severely when temperatures approach or exceed 90°F. Predominant algal species change; primary production is decreased; and bottom-associated organisms may be depleted or altered drastically in numbers and distribution. Increased water temperature may cause aquatic plant nuisances when other environmental factors are favorable.

Synergistic actions of pollutants are more severe at higher water temperatures. Domestic sewage, refinery wastes, oils, tars, insecticides, detergents, and fertilizers deplete oxygen in water more rapidly at higher temperatures, and the respective toxicities are likewise increased.

When water temperatures increase, the predominant algal species may change from diatoms, to green algae, then, at high temperatures, to blue-green algae because of species temperature preferentials. Blue-green algae can cause serious odor problems. The number and distribution of benthic organisms decreases as water temperature increases above 90°F, which is close to the tolerance limit for the water's population. This could seriously affect certain fish that depend on benthic organisms as a food source.

The cost of fish mortalities resulting from their returning to cooler water after being attracted to heated waters in winter may be considerable.

Rising temperatures stimulate the decomposition of sludge, formation of sludge gas, multiplication of saprophytic bacteria and fungi (particularly in the presence of organic wastes), and the consumption of oxygen by putrefactive processes, thus affecting the aesthetic value of a water course.

In general, marine water temperatures do not change as rapidly or range as widely as those of fresh waters. Marine and estuarine fishes, therefore, are less tolerant of temperature variation. Although this limited tolerance is greater in estuarine than in open water marine species, temperature changes are more important to those fishes in estuaries and bays than to those in open marine areas, because of the nursery and replenishment functions of the estuary that can be adversely affected by extreme temperature changes.

Pollutants of Specific Significance

Review of RWL data indicates that the pollutants of special significance to gum and wood chemicals manufacturing point source category are: oil, phenol, total dissolved solids, and zinc. Tables V-2 and V-3 contain RWL data for five of the six subcategories (excluding the char and charcoal briquet subcategory, which involves no discharge of process wastewater pollutants).

Oil

Oil RWL data for the following subcategories reflect relatively high concentrations. The following RWL data are summarized:

Subcategory	Product	Oil RWL Concentration mg/l
B	Gum Turpentine and Rosin	441
D	Tall Oil, Pitch, and Fatty Acids	325
F	Rosin Derivatives	356

The oil RWL consists mainly of oil of vegetable origin and not petroleum-based free oil. Oils of vegetable origin of significant concentrations have been reported as not being inhibitory to biological treatment.

Phenol

The following are phenol RWL's which are found to be of significance in this segment:

Subcategory	Product	Phenol RWL Concentration mg/l
D	Tall Oil, Pitch, and Fatty Acids	20.5
F	Rosin Derivatives	61.5

Equalization of the wastewater before biological treatment will minimize slug loads and the consequent inhibition of the biological population. Acclimation with time should also reduce the impact of the phenol concentrations in the RWL.

Total Dissolved Solids

Dissolved solids in gum and wood chemicals wastewaters vary dramatically from one category to another. The following is a summary of TDS, SO4, and Cl data:

Subcategory	Product	RWL Concentration TDS mg/l	SO4 mg/l	Cl mg/l
B	Gum Turpentine & Rosin	3,640	254	189
F	Rosin Derivatives	7,480	12.9	178

Metals

Metals such as zinc were found in the wastewaters from Subcategories B and F. The following zinc RWL data are summarized from Table VI-1.

Subcategory	Product	Zinc RWL Concentration mg/l
B	Gum Turpentine and Rosin	15.5
F	Rosin Derivatives	6.80

The zinc in Subcategory F is attributed to catalyst losses, but no such zinc catalyst is used in Subcategory B. Consequently, it would appear that the presence of the zinc in Subcategory B indicates a cross-contamination between the gum turpentine and rosin derivative production areas within one of the plants surveyed.

SECTION VII

CONTROL AND TREATMENT TECHNOLOGIES

General

The entire spectrum of wastewater control and treatment technology is at the disposal of the gum and wood chemicals segment. The selection of technology options depends on the economics of that technology and the magnitude of the final effluent concentration. Control and treatment technology may be divided into two major groupings: in-plant pollution abatement and end-of-pipe treatment.

After discussing the available performance data for each of the subcategories covered under gum and wood chemicals, conclusions will be made relative to the reduction of various pollutants commensurate with the following distinct technology levels:

I. Best Practicable Control Technology Currently Available (BPT)
II. Best Available Technology Economically Achievable (BAT)
III. Best Available Demonstrated Control Technology (NSPS)

To assess the economic impact of these proposed effluent limitations and guidelines on each of the industries, model treatment systems have been proposed which are considered capable of attaining the recommended RWL reduction. It should be noted and understood that the particular systems were chosen for use in the economic analysis and are not the only systems capable of attaining the specified pollutant reductions.

There are many possible combinations of in-plant and end-of-pipe systems capable of attaining the effluent limitations, guidelines and standards of performance suggested in this report. For economic practicalities, and because of its general applicability to all subcategories, one treatment model for the gum and wood chemicals segment is shown in this text for each effluent level.

This study suggests that each individual plant make the final decision about what specific combination of pollution control measures is best suited to its situation in

complying with the effluent limitations, guidelines and standards presented in this report.

Gum and Wood Chemicals

In-plant Pollution Abatement

A significant amount of pollution abatement can be accomplished by consistent adherence to good housekeeping practices. The gum and wood chemicals manufacturing point source category is characterized by relatively sophisticated process equipment which has been developed to maximize product yield. The fact that a number of the plants discharge to municipal treatment facilities has no doubt also influenced both water usage and pollutant levels.

Water management and plant age are the two major factors to be considered when discussing in-plant pollution abatement. Generally, the manufacturers practice good water management. However, instances of poor water management were observed, with resulting high wastewater flows. Age of equipment primarily has an impact on the cost-effectiveness of modifying process equipment to minimize pollution or to segregate storm and process wastewaters.

Since it is not possible, at the present time, to quantify the effects of water management and equipment age, in specific terms, these factors should be handled on a case by case basis. This is particularly feasible in light of the fact that less than five percent of the plants in the gum and wood chemicals segment discharge to surface waters.

Some in-plant techniques that should be utilized to reduce the raw waste flow internally are:

1. Segregate discharge lines to reduce the quantity of wastewater to be treated. This includes separate drainage systems for process water, sanitary wastewater, non-contact water, and storm water. Replace old piping and pumping systems with new ones.

2. Instead of simply filling and draining vessels and lines, use a small controlled rinsing with subsequent recycling of the rinse into the process. As pointed out earlier in this document, careful control of washing operations substantially reduces the RWL.

3. Where controlled rinsing of tanks is not practical, manual squeegeeing of clingage before rinsing can be practiced.

Table VII -1

Treatment Technology Survey

Type of Treatment or Disposal Facility	Plant Code No.	No. of Plants Observed
Physical/Chemical - Aerated Lagoon - Oxidation Pond	59	1
Oil/Water Separation - Trickling Filter - Oxidation Pond[1]	54	1
Lime Treatment (Odor Control) - Evaporation Pond	52	1
To Municipal Treatment Plant - No Pretreatment	58	1
To Municipal Treatment Plant - Pretreatment includes equalization, neutralization, and filtration	55	1
Wastewaters Drummed and Sent to Industrial Landfill	57	1
No discharge of process wastewater pollutants	51	1
TOTAL		7

[1]Trickling Filter was not operational during the field survey, nor was performance data available for the historic period reported in Table VIIB-3.

Table VII -2

Treatment Plant Survey Data

Plant No.	Treatment System	Sub-category	COD Percent Removal	COD Effluent mg/L	BOD_5 Percent Removal	BOD_5 Effluent mg/L	TOC Percent Removal	TOC Effluent mg/L	TSS Percent Removal	TSS Effluent mg/L	TDS Effluent mg/L	Oil and Grease Effluent mg/L
59[1]	PC-AL-OP	D	79.9	38.9	97.7	1.8	68.3	19	46.7	8	203	2.6
53[2]	EQ-pHC-AFC -CA	B,C,&D	95.5	143	95.4	73	96.9	37	96.3	12	---	2

[1] Performance data not typical since production facilities were shut down prior to plant visit.

Legend

PC - Primary Clarifier
AL - Aerated Lagoon
OP - Oxidation Pond
EQ - Equilization

[2] Data from draft EPA grant report.

pHC - pH Control
AFC - Air Flotation Control
CA - Carbon Adsorption

4/30/76

Table VII -3

Historic Treatment Plant Performance

Plant No.	Treatment System	Sub-category	COD Percent Removal	COD Effluent mg/L	BOD_5 Percent Removal	BOD_5 Effluent mg/L	TSS Percent Removal	TSS Effluent mg/L	Data Base Duration (months)	Data Base Performance Period
59	PC-AL-OP	D	-	65	-	10.6	-	2.2	2 (July-Aug)	Daily Grab Sample
54	PC-AL	C	-	310	90	187	-	50	3 (Sept-Nov)	Daily Composite Samples
A[1, 2]	AL	D	53.9	2,110	96	83	-	50	3 (June-Aug)	Daily Composite Sample
B[1, 2]	DAF-AL	D	93	190	98.8	40	-	30	2 (Nov-Dec)	Daily Composite Sample
56	AL-DAF	D	84	-	93	-	-	-		

[1] Exemplary Treatment Plants.

[2] Design basis proposed in a consulting engineer's report which was developed from bench scale biological treatability studies.

Legend

PC - Primary Clarifier
AL - Aerated Lagoon
OP - Oxidation Pond
DAF - Dissolved Air Flotation

4/30/76

4. Pipelines and pumping systems, where the rinse cannot be reworked or recycled, may be blown out with an air or inert gas to purge clingage in the final rinse.

5. Recirculate and reuse cleaning water and rinse water by treating the water to remove solids. Implement recovery systems for by-products from the process stream. Good recovery practices depend on segregated collection systems, proper plant piping systems, good housekeeping, and employee awareness.

End-of-Pipe Treatment

During the study, seven plants in the gum and wood chemicals segment were visited and sampled and a summary of the treatment technology observed is presented in Table VII-1. Six other plants were surveyed via telephone and/or letters, three of which were charcoal briquet plants that had achieved no discharge. Plants 59 and 54 provide their own wastewater treatment facilities, while Plants 58 and 55 discharge to municipal treatment plants after pretreatment. A final plant had an EPA grant ongoing to study the effect of carbon sorption treatment to naval stores aqueous waste. Although in a draft state, this report is utilized to define the BAT and NSPS treatment models. The report documents the results of 3 years of research and development activities of a manufacturer in this category in conjunction with the EPA on advance waste treatment of wastewaters generated in this manufacturing activity.

Biological Treatment

During the plant survey program, 24-hour composite samples were obtained to verify historical performance data which were made available by the plants. The results of the plant survey data are presented in Table VII-2. Plant No. 59 had experienced a shutdown before the plant visit resulting in the measurement of abnormally high organic removals. Since the initial survey was completed plant 54 has put into operaton a biological treatment system that removes 95% BOD_5 from the raw waste streams.

The historical wastewater treatment plant performance data obtained from Plants No. 59, 56 and 54 are presented in Table VII-3. The amount of data used in the performance evaluation is indicated in the Data Base column of Table VII-3. Influent pollutant concentrations were not recorded for Plant No. 59; therefore, it was not possible to quantify its removal efficiency. The historical data reported for Plant No. 54 was the design basis proposed in a consulting

engineer's report which was developed from bench scale biological treatability studies. Plant 56 is an example of an operational treatment system that is achieving 93% BOD and 84% COD removal today.

Table VII-3 also contains design criteria proposed for two plants producing tall oil by-products, which were summarized from two other individual consulting engineers' reports. The design criteria in these reports were also developed from bench scale biological treatability studies simulating aerated lagoon technology. Pilot plants A and B were not visited during the field survey program; however, the information is pertinent and was therefore included in this plant evaluation phase. These data represent the levels of pollution abatement that are obtainable from the gum and wood chemicals manufacturing point source category.

The relative biodegradability of the wastewaters from Plants No. 54, A and B were compared using a mathematical formulation for BOD_5 removal rate and loading ratios.[1] The results of the comparison indicated that these three wastewaters had relatively similar BOD_5 removal rates and therefore could be equitable compared in an evaluation of exemplary treatment plants.

Based on the previous analysis and the performance data in Table VII-3, it was concluded that Plants 54, 56 A and B are exemplary in this segment and that the following average reductions can be achieved by exemplary treatment plants:

COD removal	-	73 percent
BOD_5 removal	-	90 percent
Effluent TSS	-	50 mg/l

[1] Process Design Manual for Upgrading Existing Wastewater Treatment Plants. U.S. Environmental Protection Agency. October 1974, pp. 5-22.

Biological Treatment Plant Effluent Filtration

Filtration of biological treatment plant effluent is one method of providing supplemental removal of solids and organic material. In addition, the use of polishing ponds after biological treatment is a common method in the industrial wastewater treatment field for reducing effluent pollutants.

BOD5 is reduced by filtration mostly by removing suspended solids. Therefore, the percentage reduction of BOD5 will be significantly affected by the suspended solids level in the treated effluent to be filtered.

The following analysis was developed to equitably quantify the expected BOD5 reduction attributable to biological treatment plant effluent filtration:

Pollutant (mg/l)	Plant No. 54 Bilogical Treatment Effluent Design Data	Calculated Filtration Effluent From Plant No. 54
Total BOD5	187	172
Soluble BOD5	162	162
Suspended BOD5	25	10
TSS	50	20

The data for previous biological treatment effluent are taken from Table VII-3 and the consulting engineer's report referred to therein. The calculated effluent concentrations were determined by calculations based on 60 percent removal of the TSS and the corresponding suspended BOD component, resulting in an overall BOD5 reduction of 8 percent. This 60 percent removal factor is based on the contractor's experience in filtration of industrial wastewaters at typical effluent TSS levels under discussion and similar studies completed in the petroleum refining and grain milling point source categories.

A corresponding analysis was performed using COD data and the results are shown below:

Pollutant (mg/l	Plant No. 54 Survey Data	Calculated Filtration Effluent From Plant No. 54
Total COD	590	510
Soluble COD	457	457
Suspended COD	133	53

Soluble COD data were not available to correspond to the BOD5 values used in the previous analysis; therefore, survey data from Table VII-2 were used. An overall COD reduction of 13 percent or better are obtainable with the use of effluent filtration based on the contractor's experience and similar treatment models developed for the grain milling and

TABLE VII -4

Summary of COD Carbon Isotherm Data

Plant No.	Influent Soluble COD (mg/1)	Effluent Soluble COD (mg/1)	Maximum Soluble COD Removal (percent)	Carbon Exhaustion[1]	
				Lbs. COD Removed Per Lb. Carbon	Lbs. Carbon Per 1,000 gal.
54	457	5	99	0.59	3.8

[1]Powered carbon dose varied between 0.6 and 4.8 mg/1.

petroleum refining point source categories. Dual-media filtration can effectively reduce the suspended solids up to 80 percent of the influent concentration. Based on these studies but because of transfer of technology, a more conservative design basis of 50 percent should be chosen as the achievable concentration for NSPS suspended solids limitations.

In summary, it is expected that the application of effluent filtration to biological treatment would result in the following average reductions:

COD removal - 13 percent
BOD5 removal - 8 percent
Effluent TSS - 25 mg/l

Carbon Adsorption

During the plant survey program, a sample of treatment plant effluent from Plant No. 54 was evaluated by determination of the carbon sorption isotherm. The results of the isotherm are presented in Table VII-4. The maximum soluble COD removal was 99 percent, which corresponds to an exhaustion rate of 0.59 pounds COD/ pound carbon. During the naval stores wastewater treatment purification and reuse by activated carbon treatment study, overall reductions obtained were:

Parameter	% Removal
COD	95.5
TOC	96.9
BOD_5	95.4
SS	96.3
Oil and Grease	99.6

These values ccmpare quite well with the carbon sorption isotherm results at the other plant site.

BPT Treatment Systems

Biological treatment plant data was reviewed so that it would be possible to quantify BPT reduction factors. These factors, applied to standard raw waste load figures for each subcategory, make it possible to generate recommended effluent limitations and guidelines. The previous discussions of biological treatment indicate that the following pollutant reduction factors are consistent with BPT treatment technology:

Parameter	Reduction Factors Applied to Average BPT RWL
BOD5[1]	90 percent
COD	73 percent
TSS	50 mg/l

[1]Controlling Parameter.

The BPT effluent discharge recommendations will be made for BOD5, COD and TSS. The major source of TSS in biological treatment plant effluents is biological solids generated in the treatment plant. A properly operated activated sludge treatment system followed by good clarification can achieve a limit of less than 20 mg/l but due to the limited data base, the average value demonstrated to be achievable by the exemplary plants, 50 mg/l, will form the basis of the recommendation for TSS.

NSPS Treatment Systems

Based on the previous discussion of biological treatment plant effluent filtration, the following equitable waste reduction factors commensurate with NSPS treatment technology have been developed:

Parameter	Reduction Factors Applied to BPT Effluent Limitations
BOD[1]	8 percent
COD	13 percent
TSS	25 mg/l

[1]Controlling Parameter.

BAT Treatment Systems

The quantity and quality of the data available for establishing BAT reduction factors for the gum and wood chemicals manufacturing point source category is sparse. Data recently available from a draft of an EPA funded demonstration grant by the Industrial Environmental Research Laboratory described above, has shown that carbon adsorption pretreated by an equalization basis, flotation to remove oil and grease and pH adjustment is able to remove significant amounts of pollutants before entering the receiving waters. Based on this study and carbon sorption isotherm test, BAT technology has been developed.

Reduction Factors
Applied to BPT

Parameter	Effluent Limitation
BOD	70 percent
COD	70 percent
TSS	10 mg/l

To assess the economic impact of the proposed effluent standards, a model biological treatment system was developed. The end-of-pipe treatment model was designed based on raw waste load (RWL) data for the gum and wood chemicals category. The primary design parameter in BPT, NSPS and BAT treatment models is BOD_5 removal.

The use of a biological treatment model is done to facilitate the economic analysis and is not to be inferred as the only technology capable of meeting the effluent limitations, guidelines and standards of performance presented in this report.

SECTION VIII

COST, ENERGY, AND NONWATER QUALITY ASPECTS

General

Quantitative cost information for the suggested end-of-pipe treatment models is presented in the following discussion for the purpose of assessing the economic impact of the proposed effluent limitations and guidelines. An economic analysis of treatment cost impact will be available in a separate document.

In order to evaluate the economic impact of treatment on a uniform basis, end-of-pipe treatment models which will provide the desired level of treatment were proposed for each industrial subcategory. In-plant control measures have not been evaluated because the cost, energy, and nonwater quality aspects of in-plant controls are intimately related to the specific processes for which they are developed. Although there are general cost and energy requirements for equipment items, these correlations are usually expressed in terms of specific design parameters related to the production rate and other specific considerations at a particular production site.

In the manufacture of a single product there is a wide variety of process plant sizes and unit operations. Many detailed designs might be required to develop a meaningful understanding of the economic impact of process modifications. Such a development is really not necessary, however, because the end-of-pipe models are capable of attaining the recommended effluent limitations at the RWL's found to exist within the subcategories. A series of designs for end-of-pipe treatment models has been provided. These can be related directly to the range of influent hydraulic and organic loadings. The costs associated with these systems can be divided by the production rate for any given subcategory to show the economic impact of the system in terms of dollars per pound of product. The combination of in-plant controls and end-of-pipe treatment used to attain the effluent limiations guidelines presented in this document should be a decision made by the individual plant based upon economic considerations specific to that site.

The major nonwater quality consideration associated with in-plant control measures is the means of ultimate disposal of wastes. As the quantity of the process RWL is reduced, alternative disposal techniques such as incineration,

pyrolysis, evaporation, ocean discharge, and deep-well injection become more feasible. Recent regulations tend to limit the use of ocean discharge and deep-well injection because of the potential long-term detrimental effects associated with these disposal procedures. Incineration and evaporation are viable alternatives for concentrated waste streams. Considerations involving air pollution and auxiliary fuel requirements, depending on the heating value of the waste, must be evaluated individually for each situation.

Other nonwater quality aspects such as noise levels will not be perceptibly affected by the proposed wastewater treatment systems. Most chemical plants generate fairly high noise levels. Equipment associated with in-plant and end-of-pipe control systems would not add significantly to these noise levels.

Extensive annual and capital cost estimates have been prepared for the end-of-pipe treatment models for each subcategory to help evaluate the economic impact of the proposed effluent limitations and guidelines. The capital costs were generated on a unit process basis (e.g., equalization, neutralization, etc.) and are reported in the form of cost curves in Supplement A for all the proposed treatment systems. The following percentage figures were added on to the total unit process costs to develop the total capital cost requirements:

Item	Percent of Unit Process Capital Cost
Electrical	14
Piping	20
Instrumentation	8
Site Work	6
Engineering Design and Construction Surveillance Fees	15
Construction Contingency	15

Land costs were computed independently and added directly to the total capital costs.

Annual costs were computed using the following cost basis:

Item	Cost Allocation
Capital Recovery plus Return	10 yrs at 10 percent

Operations and Maintenance	Includes labor and supervision, chemicals, sludge hauling and disposal, insurance and taxes (computed at 2 percent of the capital cost), and maintenance (computed at 4 percent of the capital cost).
Energy and Power	Based on $0.02/kw hr for electrical power and 17¢/gal for grade 11 furnace oil.

The 10-year period used for capital recovery is acceptable under current Internal Revenue Service regulations pertaining to industrial pollution control equipment.

The following is a qualitative as well as a quantitative discussion of the possible effects that variations in treatment technology or design criteria could have on the total capital costs and annual costs.

Technology or Design Criteria	Capital Cost Differential
1. Use aerated lagoons and sludge de-watering lagoons in place of the proposed treatment system.	1. The cost reduction could be 20 to 40 percent of the proposed figures.
2. Use earthen basins with a plastic liner in place of reinforced concrete construction, and floating aerators with permanent-access walkways.	2. Cost reduction could be 20 to 30 percent of the total cost.
3. Place all treatment tankage above grade to minimize excavation, especially if a pumping station is required in any case. Use all-steel tankage to minimize capital cost.	3. Cost savings would depend on the individual situation.
4. Minimize flows and maximize concentrations through extensive in-plant recovery and water conservation, so that other treatment technologies, e.g., incineration, may be	4. Cost differential would depend on a number of items, e.g., age of plant, accessibility to process piping, local air pollution

economically competitive. standards, etc.

All cost data were computed in terms of August 1972 dollars, which corresponds to an Engineering News Records (ENR) index value of 1980.

This section provides quantitative cost information relative to assessment of the economic impact of the proposed effluent limitations and guidelines on the gum and wood chemicals segment of the miscellaneous chemicals point source category.

In order to evaluate the economic impact on a uniform treatment basis, end-of-pipe treatment models were proposed which will provide the desired level of treatment:

Technology Level	End-of-Pipe Treatment Model
BPT	Activated Sludge.
NSPS	Activated Sludge and Filtration.
BAT	Activated Sludge, Filtration, and Carbon Adsorption.

The combination of in-plant controls and end-of-pipe treatment used to attain the effluent limitations and guidelines is left up to the individual manufacturer to choose on the basis of cost-effectiveness.

BPT Cost Model

To evaluate the economic effects of BPT effluent limitations and guidelines it was necessary to formulate a BPT treatment cost model, which is based on an activated sludge system. The proposed model for subcategories C and D is shown in Figure VIII-1 and for subcategories B, E and F is shown in Figure VIII-1A. A summary of the general design basis used to size the unit processes is presented in Table VIII-1.

The following is a brief discussion of the treatment technology available and the rationale for selection of the unit processes to be included in the BPT waste treatment model.

As shown in Figure VIII-1 for subcategories C and D, for critical unit operations, two units are proposed in the model. This is to ensure operating flexibility and

FIGURE VIII -1

BPCTCA COST MODEL
SUBCATEGORIES C AND D

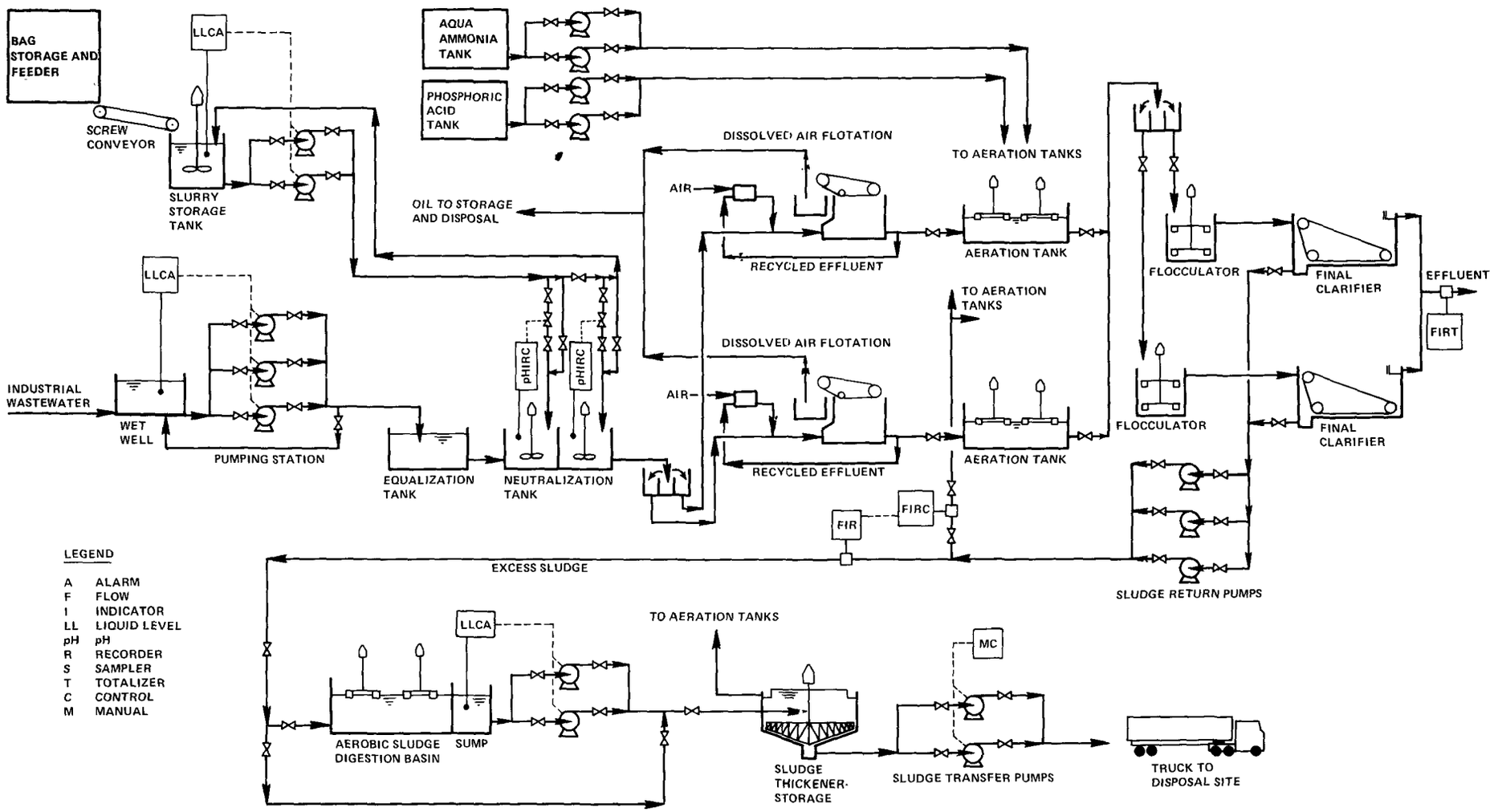

4/30/76

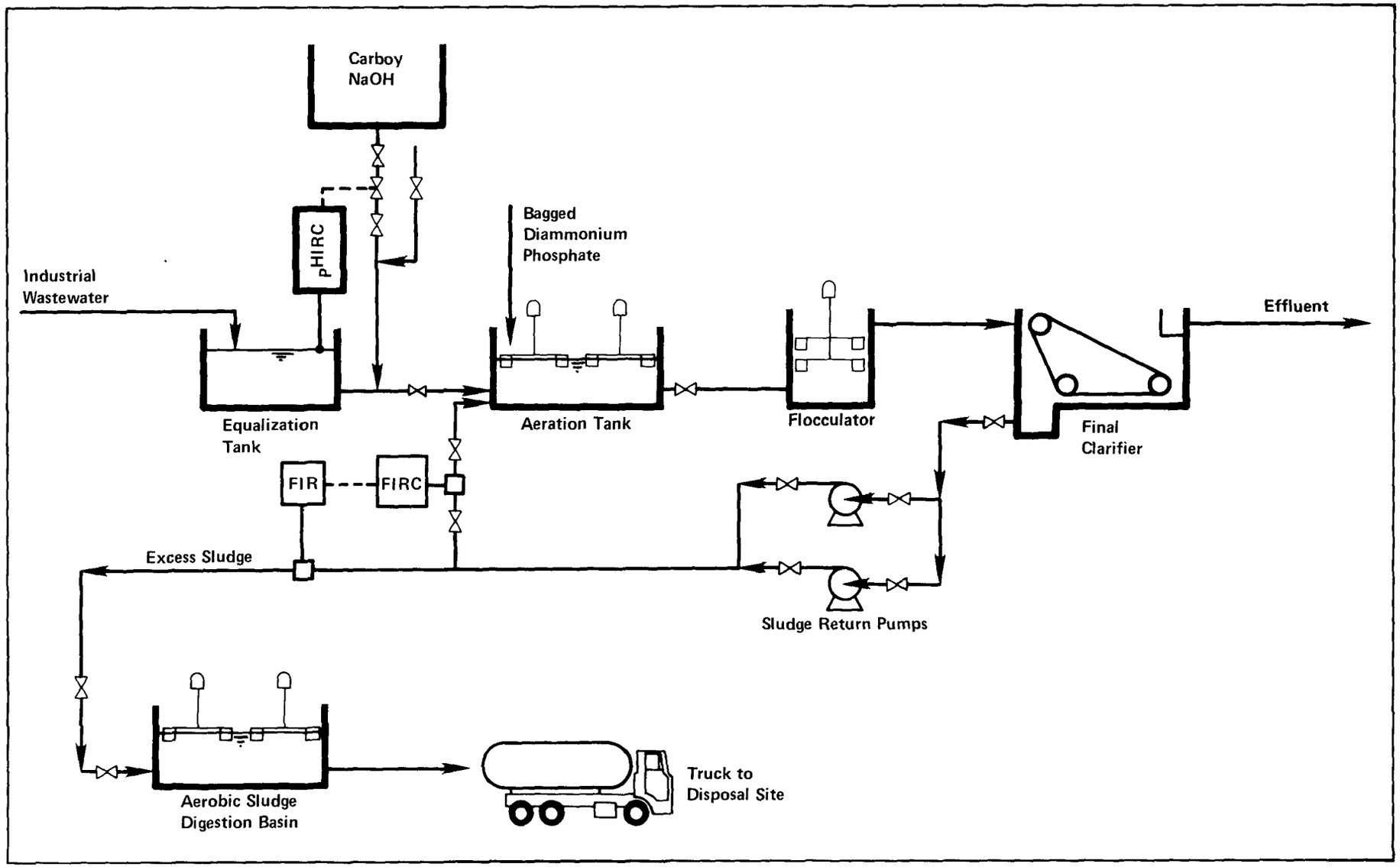

FIGURE VIII-1A

BPCTCA COST MODEL SUBCATEGORIES B,E,F

reliability. Total wastewater flows are characteristically low, generally less than 200,000 gpd. The parallel-train design is not normally used for treatment plants in the very low flow range because of economic considerations. For subcategories B, E and F, which have low flow, provision is made for single treatment units with adequate holding capacity. However, standby items should be provided for key process functions.

The topography of a particular plant site will dictate whether pumping is required. Equalization facilities are provided to minimize short interval (hourly) fluctuations in the organic loading to the treatment plant to absorb loads from reactor cleanouts, accidental spills, and other heavy loads, and to minimize the usage of neutralization chemicals. Equalization will provide for continuous (seven days per week) operation of the wastewater treatment facilities even though the manufacturing facilities operate only five days a week.

Since many wastewater streams are of low pH, neutralization may be necessary. Alkaline neutralization is provided in the form of hydrated lime storage and feed facilities for subcategories C and D and in the form of caustic soda feed for subcategories B, E and F. Since some of the subcategories have high oil RWL concentrations, dissolved air flotation was recommended for subcategories C and D.

An activated sludge process was selected for the biological treatment portion of the system. However, many of the gum and wood chemical plants are located in the southeastern United States, where aerated lagoons could provide a viable treatment alternative. However, to make the subsequent cost estimates more broadly applicable, activated sludge was selected.

The sludge handling scheme proposed in Figures VIII-1 and VIII-1A were developed to handle anticipated small quantities of sludge. The aerobic digester will provide a nonputrescible sludge which can be thickened and stored before being trucked for either land spreading or to a regional treatment facility for dewatering.

BAT Cost Model

For the purpose of the economic evaluation of BAT it was necessary to formulate BAT waste treatment models, which are presented in Figures VIII-2 and VIII-2A. The model for subcategories C and D includes dual-media filtration followed by carbon adsorption of the BPT biological treat-

FIGURE VIII -2

BATEA COST MODEL
SUBCATEGORIES B AND C

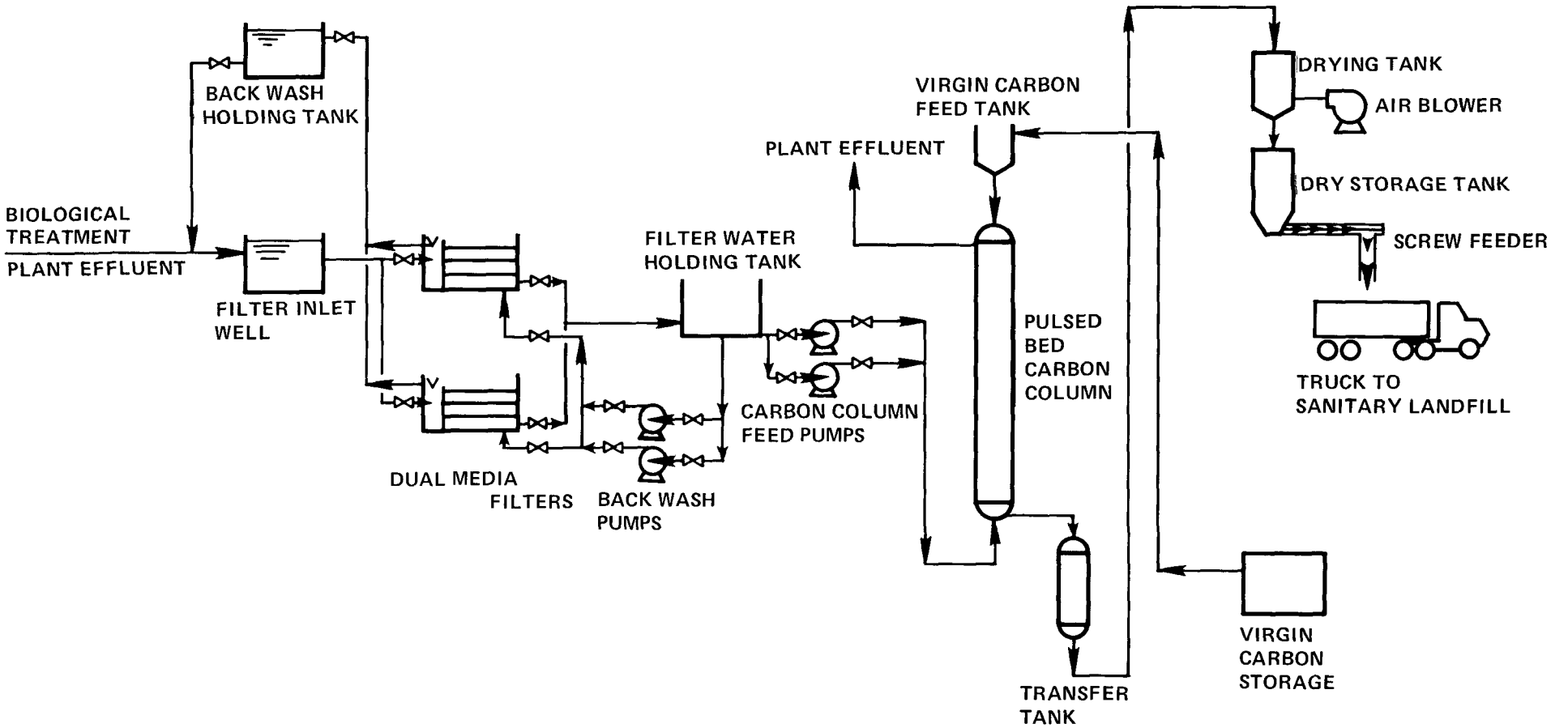

4/30/76

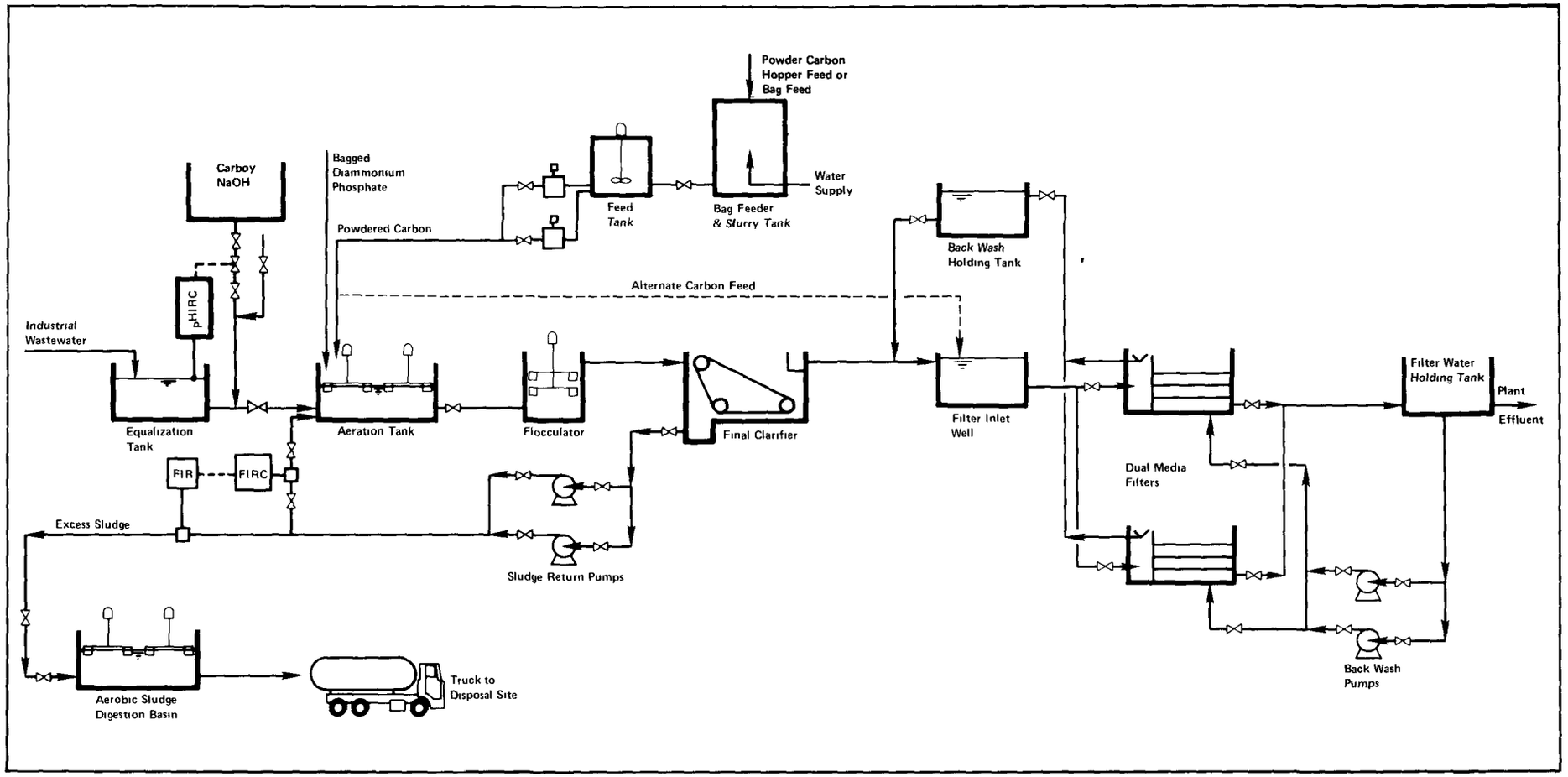

FIGURE VIII-2A

BATEA COST MODEL SUBCATEGORIES B,E,F,

ment plant effluent. The BAT model for the subcategories B, E and F consist of BPT treatment with addition of dual-media filtration and addition of powdered carbon to the aeration basin. A summary of the general design basis used to size the unit processes is presented in Table VIII-2.

Dual-media filtration was selected for the BAT treatment model to reduce suspended solids in the biological effluent and to protect the carbon columns. The pulsed bed upflow carbon system was selected for subcategories C and D to minimize capital investment for a system with a relatively high carbon exhaustion rate compared to the carbon column inventory.

The BAT waste treatment model in Figures VIII-2 and VIII-2A show the exhausted carbon being hauled to a sanitary landfill. This is because the amount of carbon exhausted per day is generally less than 500 pounds/day, which is considered below the break-even point for on-site carbon regeneration. Regeneration by the carbon supplier on a fee basis will reduce this cost and the costs presented are therefore quite conservative.

NSPS Cost Model

The evaluation of the economic effects of the NSPS effluent limitations, guidelines and new source performance standards necessitated the formulation of a treatment model using a dual-media filtration treatment system. A summary of the general design basis and proposed model is presented in the previous discussion on BAT treatment systems.

Cost

Capital and annual cost estimates were prepared for these end-of-pipe treatment models for five of the six subcategories. Subcategory A has a no discharge of process wastewater pollutants limitation and therefore end-of-pipe treatment was not applicable. The prepared cost estimates are presented in Tables VIII-3 through VIII-7. The detailed cost breakdown by unit processes are included in the supporting cost document (Supplement A).

The costs presented in these tables are incremental costs for achieving each technology level. For example, in Table VIII-4, the total capital cost for biological treatment to attain BPT effluent limitations and guidelines is shown to be $1,390,000 for a plant producing 114,000 lbs/day of wood turpentine and rosin. The BPT effluent limitations in Table VIII-4 were determined using the reduction factors presented

FIGURE VIII - 3

BADCT COST MODEL

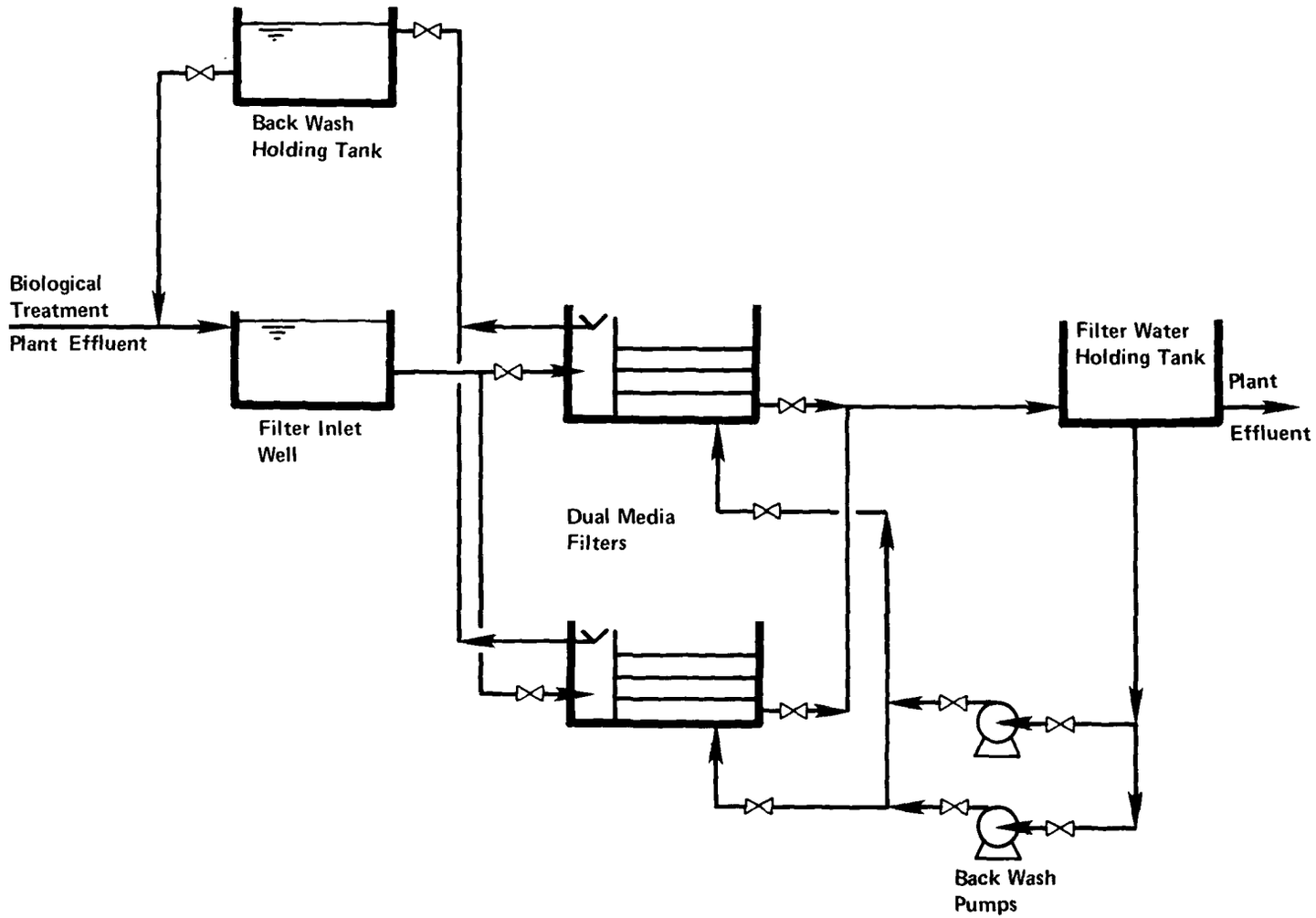

4/30/76

Table VIII -1

BPCTCA Treatment System Design Summary

Subcategory	Treatment System Hydraulic Loading (Capacities covered, in gpd)
B	3,020
C	130,000
D	133,000
E	7,960[1]
F	2,330

Pump Station

Pumping Station is provided for subcategories C and D only. Capacity to handle 200 percent of the average daily flow. Stand-by capability included, with minimum pump motor of 1/4 hp.

Equalization

One day detention time is provided for subcategories B,C and F. Two days are provided for subcategory E. Three days are provided for subcategory D. The basins are not provided with mixers to prevent oil and grease emulsification. For subcategories B,E, and F baffles and manually oil skimming are provided.

Neutralization

The two-stage neutralization basin for subcategory D is sized on the basis of a minimum detention time of 30 minutes. The lime-handling facilities are sized to provide 1,000 lbs of hydrated lime per MGD of wastewater for pH adjustment as needed in subcategory D. For subcategories B,E, and F, caustic soda addition from a carboy directly into the pipe line from the Equalization Basin is provided. Subcategory C requires no adjustment. Bag storage is provided for all plants. Lime/caustic addition is controlled by pH probes. In case of subcategory D, the lime slurry is added to the neutralization basin from a lime slurry recirculation loop. The lime-handling facilities are enclosed in a building.

Air Flotation

The air flotation units recommended for subcategories C and D are designed for oil and grease removal. They are sized on a rise rate of 1.5 gpm/ft^2 including recycle of 75 percent with a minimum 40 minute detention time. Air is provided for the units at a rate of 1.5 scf per 100 gallon recycle at 50 psig.

[1]Equalized flow is 5,680 gpd.

Table VIII -1
(continued)

Nutrient Addition

Facilities are provided for the addition of phosphoric acid and aqua ammonia for subcategories C and D and additional phosphate for subcategories B, E and F to the biological system in order to maintain the ratio of BOD:N:P at 100:5:1.

Aeration Basin

Platform-mounted mechanical aerators are provided in the aeration basin. In addition, walkways are provided to all aerators for access and maintenance. The following data were used in sizing the aerators:

Energy oxygen	0.8 lb O_2/lb BOD removal
Endogenous oxygen	6 lb O_2/hr 1,000 lb MLVSS
Field Oxygen Transfer	2.0 lb O_2/hp-hr

Oxygen is monitored in the basins using D.O probes. All aeration basins are sized using kinetics developed from treatability data for plants 2, A, B (see Table VII-3).

Secondary Clarifiers

All secondary clarifiers are rectangular units with a length-to width ratio of 4 to 1. The overflow rate varies between 40 and 400 gpd/sq. ft. depending on plant size. Sludge recycle pumps are sized to deliver 100 percent of the average flow.

Aerobic Digester

The aerobic digester is sized on the basis of a hydraulic detention time of 20 days. The sizing of the aerator-mixers is based on 165 hp per million gallons of digester volume.

Sludge Holding Tank - Thickener

A sludge-holding tank is provided for all plants, with sufficient capacity to hold 7 days flow from the aerobic digester. Facilities are included for discharge to tank trucks for hauling and disposal.

Table VIII -2

BATEA End-of-Pipe Treatment System Design Summary

Subcategory	Treatment System Hydraulic Loading (capacities covered, in gpd)
B	3,020
C	130,000
D	133,000
E	7,960[1]
F	2,330

Dual Media Filtration

The filters are sized on the basis of an average hydraulic loading of 2 gpm/sq. ft. Backwash facilities are sized to provide rates up to 20 gpm/sq. ft. and for a total backwash cycle of up to 20 minutes in duration. The filter media are 24" of coal (1mm effective size) and 12" of sand (0.4-0.5 mm effective size).

Subcategories C and D

Granular Carbon Columns

The carbon columns are sized on a hydraulic loading of 4 gpm/sq. ft. and a column detention time of 40 minutes. A backwash rate of 20 gpm/sq. ft. was assumed for 40 percent bed expansion at 70°F.

Backwash Holding Tank

Tankage is provided to hold the backwash water and decant it back to the treatment plant over a 24-hour period. This will eliminate hydraulic surging to the treatment units.

Virgin/Exhausted Carbon Storage

Tankage is provided to handle the virgin and exhausted carbon. A carbon exhaustion capacity of 0.6 lbs. COD/lb. carbon was used for design. The quantities of carbon exhausted based on the previous exhaustion capacity are not sufficiently large enough to warrant the investment in a regeneration furnace. For this reason the exhausted carbon is disposed of in a sanitary landfill as indicated in Figure VIIB-2.

Subcategories B,E, and F

Powdered Carbon

Powdered carbon addition directly into the aeration basin is provided for the subcategories B,E, and F. One day capacity hopper for powdered carbon, helix volumetric feeder, and vortex eductor are provided.
A building to house carbon feed facilities and to store powdered carbon bags is provided. The carbon will be recycled and wasted along with the biological sludge.

[1]Equalized flow is 5,680 gpd.

Table VIII -3

Wastewater Treatment Costs for
BPCTCA, BADCT and BATEA Effluent Limitations
(ENR 1780 - August, 1972 Costs)
Gum Turpentine and Rosin - Subcategory B

		Technology Level			
		RWL	BPCTCA	BADCT[2]	BATEA[2]
Average Production	21.6×10^3 kg/day (47.6×10^3 lbs/day)	--	--	--	--
Production Days	365 days				
Wastewater Flow	- KL/Day	11.4	--	--	--
	(gpd)	(3,020)	--	--	--
	KL/1,000 kg Product	0.528	--	--	--
	(gal/1,000 lbs product	(63.4)	--	--	--
BOD Effluent Limitation	kg BOD_5/1,000 kg product[3]	4.44	.444	.410	.133
	mg/L	8,410	840	774	252
COD Effluent Limitation	kg COD/1,000 kg product[3]	8.40	2.27	1.97	0.68
	mg/L	15,900	4,300	3,730	1,290
Total Capital Costs		--	$164,000	$23,000	$71,000
Annual Costs					
Capital Recovery plus return at 10% @ 10 years		--	$26,700	$ 3,700	$11,600
Insurance and Taxes		--	$ 3,300	$ 400	$ 1,400
Operating + Maintenance		--	$11,700	$ 1,600	$12,400
Energy + Power		--	$ 1,200	$ 100	$ 100
Total Annual Cost		--	$42,900	$ 5,800	$25,500
Cost[1] $/1,000 kg Product		--	$ 5.44	$ 0.77	$ 3.23
($/1,000 lbs Product)		--	($ 2.47	($ 0.35)	($ 1.47)

[1] Cost based on total annual cost

[2] Incremental cost over BPCTCA cost

3 Long term average

Table VIII -4

Wastewater Treatment Costs for
BPCTCA, BADCT and BATEA Effluent Limitations
(ENR 1780 - August, 1972 Costs)

Wood Turpentine and Rosin - Subcategory C

	Technology Level			
	RWL	**BPCTCA**	**BADCT[2]**	**BATEA[2]**
Average Production 51.8 x 10^3 kg/day (114 x 10^3 lbs/day)	--	--	--	--
Production Days 365 days				
Wastewater Flow - kL/Day	492	--	--	--
(gpd)	(130,000)	--	--	--
kL/1,000 kg Product	9.47	--	--	--
(gal/1,000 lbs product)	(1,140)	--	--	--
BOD Effluent Limitation - kg BOD/1,000 kg product[3]	6.49	.649	0.60	0.195
mg/L[5]	685	68	63	21
COD Effluent Limitation - kg COD/1,000 kg product[3]	12.6	3.40	2.96	1.02
mg/L	1,330	360	312	107
Total Capital Costs	--	$1,390,000	$135,000	$403,000
Annual Costs				
Capital Recovery plus return at 10% @ 10 years	--	$ 227,000	$ 22,000	$ 65,700
Insurance and Taxes	--	27,500	2,400	6,800
Operating + Maintenance	--	82,400	6,500	74,200
Energy + Power	--	13,100	100	300
Total Annual Cost	--	$ 350,000	$ 31,000	$147,000
Cost[1] $/1,000 kg Product	--	$ 18.5	$ 1.64	$ 7.77
($/1,000 lbs Product)	--	($ 8.40)	($ 0.75)	($ 3.53)

[1]Cost based on total annual cost
[2]Incremental cost over BPCTCA cost
[3]Long term average

Table VIII -5

Wastewater Treatment Costs for
BPCTCA, BADCT and BATEA Effluent Limitations
(ENR 1780 - August, 1972 Costs)

Tall Oil Fractionation - Subcategory D

	Technology Level			
	RWL	BPCTCA	BADCT[2]	BATEA[2]
Average Production 104 x 10^3 kg/day (228 x 10^3 lbs/day)	--	--	--	--
Production Days 365 days				
Wastewater Flow - kL/Day	503	--	--	--
(gpd)	(133,000)	--	--	--
kL/1,000 kg Product	4.86	--	--	--
(gal/1,000 lbs product)	(583)	--	--	--
BOD Effluent Limitation - kg BOD/1,000 kg product[3]	3.11	0.31	0.29	0.093
mg/L	640	64	59	19
COD Effluent Limitation - kg COD/1,000 kg product[3]	7.08	1.91	1.66	0.57
mg/L	1,460	394	343	118
Total Capital Costs	--	$1,400,000	$137,000	$411,000
Annual Costs				
Capital Recovery plus return at 10% @ 10 years	--	$ 228,000	$ 22,300	$ 67,000
	--	28,300	2,400	6.800
Operating + Maintenance	--	83,200	6,700	81,900
Energy + Power	--	14,500	100	300
Total Annual Cost	--	$ 354,000	$ 31,500	$156,000
Cost[1] $/1,000 kg Product	--	$ 9.33	$ 0.83	$ 4.11
($/1,000 lbs Product)	--	($ 4.25)	($ 0.38)	($ 1.87)

[1]Cost based on total annual cost
[2]Incremental cost over BPCTCA cost
[3]Long term average

Table VIII -6
Wastewater Treatment Costs for
BPCTCA, BADCT and BATEA Effluent Limitations
(ENR 1780 - August, 1972 Costs)
Essential Oil - Subcategory E

		Technology Level			
		RWL	BPCTCA	BADCT[2]	BATEA[2]
Average Production	486 kgs/day (1.07×10^3 lbs/day)	--	--	--	--
Production Days	260 days				
Wastewater Flow -	kL/Day	30.1	--	--	--
	(gpd)	(7,960)	--	--	--
	kL/1,000 kg Product	62.1	--	--	--
	(gal/1,000 lbs product)	(7,450)	--	--	--
BOD Effluent Limitation -	kg BOD/1,000 kg product[3]	70.8	7.08	6.51	2.12
	mg/L	1,140	114	105	34
COD Effluent Limitation -	kg COD/1,000 kg product[3]	86.9	23.5	20.4	7.05
	mg/L	1,400	378	329	113
Total Capital Costs		--	$1[illegible],000	$29,000	$50,000
Annual Costs					
Capital Recovery plus return at 10% @ 10 years		--	$23,500	$ 4,700	$ 8,200
Insurance and Taxes		--	$ 2,900	$ 500	$ 1,000
Operating + Maintenance		--	$10,200	$ 2,200	$ 5,300
Energy + Power		--	$ 600	$ 100	$ 100
Total Annual Cost		--	$37,200	$ 7,500	$14,600
Cost[1] $/1,000 kg Product		--	$ 294	$ 59.4	$ 116
($/1,000 lbs Product)		--	$ (134)	($ 27.0)	($ 52.5)

[1] Cost based on total annual cost
[2] Incremental cost over BPCTCA cost
[3] Long term average

Table VIII -7

Wastewater Treatment Costs for
BPCTCA, BADCT and BATEA Effluent Limitations
(ENR 1780 - August, 1972 Costs)
Rosin Derivatives - Subcategory F

		Technology Level			
		RWL	BPCTCA	BADCT[2]	BATEA[2]
Average Production	28.5×10^3 kg/day	--	--	--	--
	(62.8×10^3 lbs/day	--	--	--	--
Production Days	365 days				
Wastewater Flow -	kL/Day	8.82	--	--	--
	(gpd)	(2,330)	--	--	--
	kL/1,000 kg Product	0.309	--	--	--
	(gal/1,000 lbs product	(37.1)	--	--	--
BOD Effluent Limitation-	kg BOD/1,000 kg product[3]	4.40	.44	0.405	0.132
	mg/L	14,200	1420	1312	428
COD Effluent Limitation-	kg COD/1,000 kg product[3]	8.58	2.32	2.02	0.70
	mg/L	27,800	7,510	6,540	2,260
Total Capital Costs		--	$195,000	$23,000	$71,000
Annual Costs					
Capital Recovery plus return at 10% @ 10 years		--	$ 31,800	$ 3,700	$11,600
Insurance and Taxes		--	$ 3,900	$ 400	$ 1,400
Operating + Maintenance		--	$ 15,200	$ 1,600	$14,000
Energy + Power		--	$ 2,900	$ 100	$ 100
Total Annual Cost		--	$53,800	$ 5,800	$27,100
Cost[1] $/1,000 kg Product		--	$ 5.17	0.57	$ 2.61
($/1,000 lbs Product)		--	$ (2.35)	(0.26)	($ 1.18)

[1] Cost based on total annual cost
[2] Incremental cost over BPCTCA cost
[3] Long term average

in Section VII. The incremental capital costs for achieving the recommended NSPS effluent limitation is shown in Table VIII-4 to be $135,000. This cost would be in addition to the capital investment made to achieve the BPT effluent limitations and guidelines. In contrast, the incremental cost for achieving the BAT COD effluent limitation would be $403,000.

A discussion of the possible effects that variations in treatment technology or design criteria could have on capital and annual costs is presented in the General section.

Energy

The size ranges of the BPT and BAT treatment models preclude the application of some high-energy-using unit processes such as sludge incineration and carbon regeneration. Therefore, the overall impact on energy consumption for model waste treatment systems should be minimal; estimated 6.8 and 7.4% energy consumed by gum and wood chemical plants 54 and 59, respectively. Tables VIII-3 through VIII-7 present the cost for energy and power, for each treatment model for BPT, BAT, and NSPS. The details for energy and power requirements are included in the supporting cost appendix document (Supplement A). Telephone discussions with managers for plants No. 54 and 59 indicate that the power to operate wastewater treatment facilities for these plants is in the range of 7.9 to 10 percent of the total power required for the manufacturing operations.

Liquid waste incineration is a viable alternative for concentrated waste streams. The heating value of the particular waste dictates the auxiliary fuel requirement and thus these energy considerations must be evaluated on an individual basis.

Non-water Quality Aspects

The major non-water quality aspects of the proposed effluent limitations, guidelines and new source performance standards are ultimate sludge disposal and noise and air pollution.

The BPT treatment model process includes land spreading of the digested biological sludge. If practiced correctly, this disposal method will not create health hazards or nuisance conditions. However, there is a widespread diversity of opinion over the effects of heavy metals on crop toxicity and in the food chain, and the possible nitrate contamination of the ground water. Carefully

controlled sludge application should minimize these problems as well as the potential zinc problem. The following are summaries of the biological sludge and exhausted carbon residue from the proposed BPT and BAT treatment facilities:

Subcategory	Biological Sludge Quantity (gallons/day)[1]	Carbon Residue (cu yd/year)[2]	Combined Sludge (gals/day)
B	430	-	1190
C	1,910	249	-
D	1,820	28	-
E	140	-	318
F	760	-	1,780

[1]Based on a 2 percent solids concentration.
[2]Dry weight basis.

Noise levels will not be appreciably affected with the implementation of the proposed treatment models. Air pollution should only be a consideration if liquid incineration were selected as the waste disposal alternative.

SECTION IX

BEST PRACTICABLE CONTROL TECHNOLOGY CURRENTLY AVAILABLE (BPT)

General

The effluent limitations that must be achieved by all plants by 1 July, 1977 through the application of the Best Practicable Control Technology Currently Available (BPT) are based upon an average of the best performance achievements of existing exemplary plants. BPT effluent limitations and guidelines are based on level of technology of the exemplary treatment plants observed during the gum and wood chemicals field survey and reported pilot plant studies.

The development of the BPT has been based on both in-plant and end-of-pipe technology for each industrial subcategory. The effluent limitations and guidelines commensurate with the BPT have been established for each industrial subcategory on the basis of information in Sections III through VIII of this report, and are presented in the following sections. It has been shown that these limitations can be attained through the application of BPT pollution control technology. The approach taken in the gum and wood chemicals segment is described in the following section.

Gum and Wood Chemicals

Strategy for Development of BPT Effluent Limitations Guidelines

The effluent limitations and guidelines for BPT were developed by steps, starting from the process raw waste loads (RWL).

As previously discussed in Section IV, Subcategory A (production of char and charcoal briquets via carbonization of hardwood and softwood) is a net water consumer and discharges no process wastewaters. Raw materials and intermediate char and charcoal briquets are handled in a dry form. The char is brittle and disintegrates with handling, thus generating excessive fines and creating fugitive dust problems in the production area. This problem can be mitigated by utilizing buggies for material transport. Any materials outside of the production specification range can be reworked or disposed of in dry form. Therefore, no

Table IX -1
BPCTCA Effluent Limitations Guidelines

Subcategories	Flow L/kkg Product (gal/1,000 lbs.)	Raw Waste Load (RWL) Parameter	kg/kkg[1]	mg/L	BPCTCA (1977) Long-Term Average Daily Effluent Parameter	kg/kkg[1]	mg/L	Effluent Limitations: Average of Daily Values for 30 Consecutive Days Shall Not Exceed Parameter	kg/kkg[1]	mg/L	Maximum for Any One Day Parameter	kg/kkg[1]	mg/L
Subcategory A													
Char and Charcoal Briquets		No Discharge of Process Wastewater Pollutants											
Subcategory B													
Gum Rosin and Turpentine	528 (63.4)	BOD_5	4.44	8,410	BOD_5	.444	840	BOD_5	.755	1428	BOD_5	1.42	2667
		COD	8.40	15,900	COD	2.27	4,300						
		TSS	--	--	TSS	0.026	50	TSS	0.026	50	TSS	0.077	145
Subcategory C													
Wood Rosin, Turpentine, and Pine Oil	9,470 (1,140)	BOD_5	6.49	685	BOD_5	0.649	68	BOD_5	1.10	116	BOD_5	2.08	219
		COD	12.6	1,330	COD	3.40	360						
		TSS	--	--	TSS	0.475	50	TSS	0.475	50	TSS	1.38	145
Subcategory D													
Tall Oil Rosin, Pitch, and Fatty Acids	4,860 (583)	BOD_5	3.11	640	BOD_5	0.31	64	BOD_5	.53	109	BOD_5	.99	204
		COD	7.08	1,460	COD	1.91	394						
		TSS	--	--	TSS	0.243	50	TSS	0.243	50	TSS	0.705	145
Subcategory E													
Essential Oil	62,100 (7,450)	BOD_5	70.8	1,140	BOD_5	7.08	114	BOD_5	12.0	194	BOD_5	22.7	365
		COD	86.9	1,400	COD	23.5	378						
		TSS	--	--	TSS	3.11	50	TSS	3.11	50	TSS	9.01	145
Subcategory F													
Rosin Derivatives	309 (37)	BOD_5	4.40	14,200	BOD	0.44	1420	BOD_5	.75	2414	BOD_5	1.41	4569
		COD	8.58	27,800	COD	2.32	7,510						
		TSS	--	--	TSS	0.015	50	TSS	0.015	50	TSS	0.045	145

[1] kg/kkg product is equivalent to lbs./1,000 lbs. production

discharge of process wastewater pollutants is consistent with BPT for this subcategory.

For the other five subcategories, the process RWL is a production-based ratio relating specific pollutants to production quantities. During the field sampling program, process RWL's were developed for the five subcategories by sampling contact process wastewaters wherever possible. Where it was not feasible to sample a segregated, process wastewater stream (e.g., Subcategory D), the total process discharge was sampled but the RWL flow was determined by subtracting the uncontaminated cooling water and steam condensate contribution from the total process discharge.

There were also instances where the data obtained for RWL flow was not considered representative of the process. For example, in Subcategory F, Plant No. 57 has the operating practice of venting an aqueous waste stream to the atmosphere in a vapor phase. It was determined that normal manufacturing practice is to condense such steam vapor; therefore, this stream was included in the RWL flow for that plant, since the stream contacted small quantities of entrained material and non-condensible hydrocarbons.

Single RWL values were established in each category for all pertinent pollutants; historic data on raw waste loads was only available at Plant No. 55, Subcategory B, and Plant No. 55, Subcategory F. All other data was derived from the field sampling survey conducted by the contractor. These data are indicative of the variations in raw waste load which may exist for a single process at a particular plant or between different manufacturers operating the same process. For example, this variation in RWL's was observed between Plants No. 55 and No. 52 in Subcategory B and is discussed in Section V.

The single set of values assigned to each process was designed as the RWL which can be obtained through the application of in-plant pollution control practices which are commensurate with BPT. Briefly, the process modifications considered consistent with BPT include the following:

1. The recycle of still condensate for raw material wash water as illustrated in Plant No. 55, Subcategory B.
2. The on-site treatment and recycle of raw material wash water as demonstrated in Subcategory C.

3. The direct recycle of immiscible solvents as an absorbent of non-condensible hydrocarbons as demonstrated in Plant No. 55, Subcategory F.
4. The recycle of water used in barometric condensers as demonstrated in Subcategory D.

End-of-pipe treatment technologies commensurate with BPT are based on the utilization of biological treatment, including activated sludge or aerated lagoons with clarification of the lagoon effluent. These end-of-pipe systems may include additional treatment operations such as equalization, neutralization, dissolved air flotation for subcategories C and D for the separation of insoluble hydrocarbons, or nutrient addition.

Although biological systems are considered to be generally applicable to the waste generated by this segment, it should be noted that only two such systems were observed during the study. The performance data for these two systems are presented in Table VII-2. The effluent from Plant No. 59, while producing a high-quality effluent, was considered atypical because the plant was operating at low levels of production for approximately two weeks prior to the plant survey. Plant 56 employed dissolved air flotation followed by an aerated lagoon. This plant obtained 93% and 84% BOD_5 and COD reduction respectively.

The design criteria for the proposed biological treatment models were developed from bench scale biological treatability studies on wastewaters from a wood naval stores production operation and two tall oil by-product production facilities, as discussed in Section VIIB of this document. It should be noted that metal catalyst may in some cases be used in the production of rosin-based derivatives, and that the process wastewaters may contain sufficient levels of metal to be toxic or inhibitory to a biological system. However, if specific manufacturing processes employing such catalysts discharges wastewaters combined with wastewaters from processes not employing metal catalysts, the resulting toxicity of the total wastewater may be reduced to non-inhibitory levels for biological treatment. If this is not the case, BPT does not preclude the use of in-process pretreatment prior to discharge to biological facilities, or physical/chemical processes to remove the toxic metals from the process wastewaters.

Effluent Reduction Obtainable Through Application of BPT

Based on the information contained in Sections IV and VII of this document, a determination has been made of the degree

of effluent reduction obtainable via BPT, which is presented in Table IX-1. Although the effluent limitations and guidelines for BPT may be obtained by whatever combination of in-plant and end-of-pipe means is best suited to the individual manufacturer, the numerical values for the effluent limitations and guidelines were calculated through application of waste reduction factors based on the use of end-of-pipe biological treatment systems. The waste reduction factors used for calculating the BPT effluent limitations and guidelines for BOD are:

BOD_5 - 90 percent

These factors are based on the performance of biological treatment systems described in Section VII - Control and Treatment Technologies.

It is noted that BOD_5 is listed as a control parameter in this recommendation for limitations. The data used to evaluate the operation of the exemplary system cited as a basis for these recommendations is based in large measure on the reductions of COD obtained by use of the model technology. Since COD may be used by operators to control treatment plants it is suggested that 73% be listed as the long term reduction efficiency based on demonstrated treatment systems.

SECTION X

BEST AVAILABLE TECHNOLOGY ECONOMICALLY ACHIEVABLE

General

The effluent limitations and guidelines to be achieved by all plants by July 1, 1983 through the application of the Best Available Technology Economically Achievable (BAT) are based upon the very best control and treatment technology employed by the existing exemplary plants in each industrial subcategory. In those industrial subcategories where this level of control and treatment technology was found inadequate for the purpose of defining BAT, control and treatment technologies transferable from other industries or technology demonstrated in pilot plant studies were employed.

Gum and Wood Chemicals

Treatment commensurate with BAT requires the application of activated carbon adsorption and filtration to the biological treatment system described for BPT, or the use of second-stage biological treatment in series with the BPT. The specific choice of waste treatment systems should depend on the specific process, or group of processes, in operation at any given facility.

The performance of these systems has been discussed in Section VIII - Control and Treatment Technologies. Incremental waste reduction associated with these technologies for BOD5 and COD parameters are:

COD - 70 percent reduction (BAT effluent is 30 percent of achievable demonstrated performance treatment systems)

BOD5 - 70 percent reduction (BAT effluent is 30 percent of a BPT effluent)

Effluent limitations and guidelines for BAT were calculated by applying the above reduction factors to average effluent for BPT shown in Table IX-1 for subcategories B through F. BAT effluent limitations and guidelines for subcategory A are no discharge of process wastewater pollutants.

The effluent limitations and guidelines for BAT are presented in Table X-1. Again, it must be understood that the BOD5 and COD values as presented are average daily

Table X -1
BATEA Effluent Limitations Guidelines

Subcategories	Flow L/kkg Product (gal/1,000 lbs.)	BPCTCA Long-Term Average Daily Effluent Parameter	kg/kkg[1]	mg/L	BATEA (1983) Long-Term Average Daily Effluent Parameter	kg/kkg[1]	mg/L	Effluent Limitations: Average of Daily Value for 30 Consecutive Days Shall Not Exceed Parameter	kg/kkg[1]	mg/L	Effluent Limitations: Maximum for Any One Day Parameter	kg/kkg[1]	mg/L
Subcategory A													
Char and Charcoal Briquets		No Discharge of Process Wastewater Pollutants											
Subcategory B													
Gum Rosin and Turpentine	528 (63.4)	BOD_5	0.444	840	BOD_5	0.133	252	BOD_5	0.22	--	BOD_5	0.28	--
		COD^5	2.27	4,300	COD^5	0.68	1,290	COD^5	1.09	--	COD^5	1.36	--
		TSS	0.026	50	TSS	0.005	10	TSS	0.005	10	TSS	0.01	20
Subcategory C													
Wood Rosin, Turpentine and Pine Oil	9,470 (1,140)	BOD_5	.649	68	BOD_5	0.195	21	BOD_5	0.33	--	BOD_5	0.41	--
		COD^5	3.40	360	COD^5	1.02	107	COD^5	1.63	--	COD^5	2.04	--
		TSS	0.475	50	TSS	0.095	10	TSS	0.095	10	TSS	0.19	20
Subcategory D													
Tall Oil Rosin, Pitch, and Fatty Acids	4,860 (583)	BOD_5	0.31	64	BOD_5	0.093	19	BOD_5	0.16	--	BOD_5	0.20	--
		COD^5	1.91	394	COD^5	0.57	118	COD^5	0.91	--	COD^5	1.14	--
		TSS	0.243	50	TSS	0.049	10	TSS	0.049	10	TSS	0.098	20
Subcategory E													
Essential Oils	62,100 (7,450)	BOD_5	7.08	114	BOD_5	2.12	34	BOD_5	3.61	--	BOD_5	4.45	--
		COD^5	23.5	378	COD^5	7.05	113	COD^5	11.30	--	COD^5	14.1	--
		TSS	3.11	50	TSS	0.62	10	TSS	0.62	10	TSS	1.25	20
Subcategory F													
Rosin Derivatives	309 (37)	BOD_5	0.44	1420	BOD_5	0.132	428	BOD_5	0.22	--	BOD_5	0.28	--
		COD^5	2.32	7,510	COD^5	0.70	2,260	COD^5	1.12	--	COD^5	1.40	--
		TSS	0.015	50	TSS	0.003	10	TSS	0.003	10	TSS	0.006	20

[1] kg/kkg product is equivalent to lbs./1,000 lbs. production

SECTION XI

NEW SOURCE PERFORMANCE STANDARDS (NSPS)

General

The term "new source" is defined in the "Federal Water Pollution Control Act Amendments of 1972" to mean "any source, the construction of which is commenced after the publication of proposed regulations prescribing a standard of performance". Technology applicable to new sources shall be the Best Available Demonstrated Control Technology (NSPS), defined by a determination of what higher levels of pollution control can be attained through the use of improved production process and/or wastewater treatment techniques. Thus, in addition to considering the best in-plant and end-of-pipe control technology, new source performance standards (NSPS) are to be based upon an analysis of how the level of effluent may be reduced by changing the production process itself.

Gum and Wood Chemicals

Best Available Demonstrated Control Technology (NSPS) is based upon the utilization of both in-plant controls and end-of-pipe process treatment technologies, which include biological treatment as proposed for BPT and removal of additional total suspended solids via effluent filtration. The reduction in BOD5 and COD parameters via the filtration of BPT effluent is as follows:

BOD5 - 8 percent reduction of BPT effluent
COD - 13 percent reduction of BPT effluent

The suspended solids limitation should be 25 mg/l, which will be applied to the effluent from the entire treatment facility.

NSPS effluent limitations and guidelines for subcategory A are no discharge of process wastewater pollutants.

Table XI-1 indicates NSPS effluent limitations and guidelines for the gum and wood chemicals manufacturing point source category for Subcategories B through F. As with BPT and BAT, the values shown for the average NSPS effluent should not be directly applied until they are adjusted, as presented in Table XI-1, for variation in treatment plant performance as provided in Section XIII, Performance Factors in Treatment Plant Operations.

Table XI -1
New Source Performance Standards

Subcategories	Flow L/kkg Product (gal/1,000 lbs.)	BPCTCA Long-Term Average Daily Effluent Parameter	kg/kkg[1]	mg/L	BADCT Long-Term Average Daily Effluent Parameter	kg/kkg[1]	mg/L	New Source Performance Standards: Average of Daily Value for 30 Consecutive Days Shall Not Exceed Parameter	kg/kkg[1]	mg/L	Maximum for Any One Day Parameter	kg/kkg[1]	mg/L
Subcategory A													
Char and Charcoal Briquets		No Discharge of Process Wastewater Pollutants											
Subcategory B													
Gum Rosin and Turpentine	528 (63.4)	BOD_5	0.444	840	BOD_5	0.41	774	BOD_5	0.70	--	BOD_5	0.86	--
		COD	2.27	4,300	COD	1.97	3,730	COD	3.15	--	COD	3.94	--
		TSS	0.026	50	TSS	0.013	25	TSS	0.013	25	TSS	0.026	50
Subcategory C													
Wood Rosin, Turpentine, and Pine Oil	9,470 (1,140)	BOD_5	0.649	68	BOD_5	0.60	63	BOD_5	1.02	--	BOD_5	1.25	--
		COD	3.40	360	COD	2.96	312	COD	4.74	--	COD	5.92	--
		TSS	0.475	50	TSS	0.24	25	TSS	0.24	25	TSS	0.48	50
Subcategory D													
Tall Oil Rosin, Pitch, and Fatty Acids	4,860 (583)	BOD_5	0.31	64	BOD_5	0.29	59	BOD_5	0.49	--	BOD_5	0.61	--
		COD	1.91	394	COD	1.66	343	COD	2.66	--	COD	3.32	--
		TSS	0.243	50	TSS	0.12	25	TSS	0.12	25	TSS	0.24	50
Subcategory E													
Essential Oils	62,100 (7,450)	BOD_5	7.08	114	BOD_5	6.51	105	BOD_5	11.1	--	BOD_5	13.7	--
		COD	23.5	378	COD	20.4	329	COD	32.6	--	COD	40.8	--
		TSS	3.11	50	TSS	1.55	25	TSS	1.55	25	TSS	3.10	50
Subcategory F													
Rosin Derivatives	309 (37)	BOD_5	0.44	1420	BOD_5	0.405	1312	BOD_5	0.69	--	BOD_5	0.85	--
		COD	2.32	7,510	COD	2.02	6,540	COD	3.23	--	COD	4.04	--
		TSS	0.015	50	TSS	0.008	25	TSS	0.008	25	TSS	0.016	50

[1] kg/kkg production is equivalent to lbs./1,000 lbs. production

SECTION XII

PRETREATMENT STANDARDS

General

Pollutants from specific processes within the gum and wood chemical manufacturing point source category may interfere with, pass through, or otherwise be incompatible with publicly owned treatment works (municipal system). The following sections examine the general wastewater characteristics and the pretreatment unit operations which may be applicable to the gum and wood chemicals manufacturing point source category.

Gum and Wood Chemicals

A review of the wastewater characteristics reveals that the process wastewaters contain high concentrations of soluble oxygen-demanding materials, and are generally acidic and deficient in the nutrients phosphorous and nitrogen. Significant concentrations of zinc were noted during the survey in Subcategories B and F. The zinc metal in Subcategory F was attributed to losses of process catalyst. Contamination of gum distillation wastewaters with process wastewaters from Subcategory F process is the suspected source of zinc in Subcategory B wastewaters.

Oil and grease (from vegetable sources) was found in wastewaters from Subcategories B, D and F. These oils are not hazardous and generally considered more biodegradable than oils from petroleum sources. However, separable oils should be removed from the process wastewaters by pretreatment prior to discharge to public sewers in order to minimize fouling problems in the sewer. This pretreatment would be of a type to prevent excessive oil and grease discharges to POTW's. A simple weir skimmer should suffice and essentially no cost is involved since existing collection systems can be fitted with skimmer weirs and the oil removed periodically. Proper operation and employee instruction should prevent any significant problems.

The scope of this study did not allow for a specific toxicity evaluation of individual product wastewaters. However, the completeness of the RWL analytical data did provide a wastewater profile which could be used to evaluate possible biological inhibition. Such evaluations must bring into account the dilution effect of domestic wastewaters when considering concentrations of possible inhibiting

Table XII -1

Pretreatment Unit Operations

Subcategories	Suspended Growth Biological System	Fixed Growth Biological System	Independent Physical - Chemical System
B, D, F	Oil Separation + Equalization + Neutralization + Spill Protection + Chemical Precipitation[1]	Oil Separation + Equalization + Neutralization + Spill Protection + Chemical Precipitation[1]	Oil Separation + Equalization + Neutralization + Chemical Precipitation[1]
C, E	Equalization + Neutralization + Spill Protection	Equalization + Neutralization	Equalization + Neutralization

[1]Need for chemical precipitation depends on metal(s) content.

materials. Domestic wastewaters should also provide sufficient nitrogen and phosphorus to improve the treatability characteristics of the process wastes. Because this manufacturer's wastewaters contain high levels of soluble oxygen demand in relatively small discharge flows, it will be necessary that the sewage treatment facility have sufficient oxygen transfer and solids handling and disposal capacity to adequately treat wastewaters. If such capacity cannot be made available at the public system, biological pretreatment facilities must be provided by manufacturers to reduce the oxygen demand content of the process wastewaters to acceptable levels before discharge to the public sewers. In all cases, the manufacturers should provide sufficient equalization and neutralization of wastewaters to prevent discharge loadings which could cause adverse impact on the performance of the municipal system. Table XII-1 shows possible unit operations which may be required for pretreatment of gum and wood chemicals wastewaters.

SECTION XIII

PERFORMANCE FACTORS FOR TREATMENT PLANT OPERATIONS

General

In the past, effluent requirements have been issued by regulatory agencies without stated concern for uniform expression. Some agencies have issued regulations without definition of time interval or without stipulation of the type of the sample (grab or composite). This has caused difficulties in determining whether a particular plant was in violation. To overcome that situation, daily historical data were reviewed, when available, from several biological treatment plants.

Items such as spills, startup, shutdown, climatic conditions, storm runoff, flow variation and treatment plant inhibition may affect the operation of treatment plant performances.

Some factors that bring about variations in treatment plant performance can be minimized through proper dosing and operation. Some of the controllable causes of variability and techniques that can be used to minimize their effect are explained below.

Spills of certain materials in the plant can cause a heavy loading on the treatment system for a short period of time. A spill may not only cause higher effluent levels as it goes through the system, but may inhibit a biological treatment system and therefore have longer term effects. Equalization helps to lessen the effects of spills. However, long term reliable control can only be attained by an aggressive spill prevention and maintenance program including training of operating personnel. Industrial associations such as the Manufacturing Chemists Association (MCA) have developed guidelines for prevention, control and reporting of spills. These note how to assess the potential of spill occurrence and how to prevent spills. Each industrial organic chemical plant should be aware of the MCA report and institute a program of spill prevention using the principles described in the report. If every plant were to use such guidelines as part of plant waste management control programs, its raw waste load and effluent variations would be decreased.

Startup and shutdown periods should be reduced to a minimum and their effect dampened through the use of equalization facilities and by proper scheduling of manufacturing cycles.

The design and choice of type of a treatment system should be based on the climate at the plant location so that this effect can be minimized. Where there are severe seasonal climatic conditions, the treatment system should be designed and sufficient operational flexibility should be available so that the system can function effectively.

Chemicals likely to inhibit the treatment processes should be identified and prudent measures taken to see that they do not enter the wastewater in concentrations that may result in treatment process inhibitions. Such measures include the diking of a chemical use area to contain spills and contaminated wash water, using dry instead of wet clean-up of equipment, and changing to non-inhibiting chemicals.

The impact of process upsets and raw waste variations can be reduced by properly sized equalization units. Equalization is a retention of the wastes in a suitably designed and operated holding system to average out the influent before allowing it to enter the treatment system.

Storm water holding or diversion facilities should be designed on the basis of rainfall history and area being drained. The collected storm runoff can be drawn off at a constant rate to the treatment system. The volume of this contaminated storm runoff should be minimized through segregation and the prevention of contamination. Storm runoff from outside the plant area, as well as uncontaminated runoff, should be diverted around the plant or contaminated area.

Gum and Wood Chemicals

Biological Wastewater Treatment

Only two wastewater treatment plants which employ biological treatment were surveyed during the gum and wood chemicals study. Neither of these plants had sufficient historic data to perform a statistical analysis to determine performance factors for treatment plant operation.

Petroleum refining manufacturing systems closely resemble the gum and wood chemicals manufacturing plants in that both employ continuous or batch continuous distillation operations in dedicated equipment on hydrocarbon based materials. Organic load variability on end-of-pipe

treatment facilities for these two segments are, therefore anticipated to be closely related.

The performance factors for petroleum refining point source category have been published by EPA[1] as follows:

Level of Treatment	Effluent Parameter	Performance Factor for Maximum Monthly Effluent Value	Performance Factor for Maximum Daily Effluent Value
BPT	BOD_5	1.7	3.2
	COD	1.6	3.1
	TSS	--*	2.9
BAT	BOD_5	1.7	2.1
	COD	1.6	2.0
	TSS	--*	2.0
NSPS	BOD_5	1.7	2.1
	COD	1.6	2.0
	TSS	--*	2.0

* Based on short term actual performance of exemplary systems in gum and wood chemicals.

The proper performance factors were applied to long-term average daily BPT effluent limitations in order to generate effluent limitations and guidelines based on the maximum average of daily values for thirty consecutive days and the maximum for any one day as presented in Sections II, IX, X, and XI of this document.

The applicability of this established treatment plant performance variability data for petroleum refining to the gum and wood chemicals manufacturing point source category will be further substantiated as additional plant performance data become available.

Activated Carbon Wastewater Treatment

During the survey of the gum and wood chemicals manufacturing point source category, no plant employed activated carbon after biological treatment. Consequently, no long-term performance data were available for this process. As a result, the performance factors developed for BAT and NSPS for petroleum refining were applied to BAT and NSPS effluent limitations and guidelines. The effluent limitations and guidelines based on maximum average of daily values for thirty consecutive days and maximum for any one day in Tables X-1 and XI-1 were similarly calculated from

SECTION XIV

ACKNOWLEDGEMENTS

This report was prepared by the Environmental Protection Agency on the basis of a comprehensive study of this manufacturing segment performed by Roy F. Weston, Inc., under contract No. 68-01-2932. The original study was conducted and prepared for the Environmental Protection Agency under the direction of Project Director James H. Dougherty, P.E., and Technical Project Manager Jitendra R. Ghia, P.E. The following individual members of the staff of Roy F. Weston, Inc., made significant contributions to the overall effort:

C. Mangan	P.J. Marks
J. McGovern	K.K. Wahl
T.E. Taylor	W.D. Sitman
K.M. Peil	

The original RFW study and this EPA revision were conducted under the supervision and guidance of Mr. Joseph S. Vitalis, Project Officer, assisted by Mr. George Jett, Assistant Project Officer.

Overall guidance and excellent assistance was provided the Project Officer by his associates in the Effluent Guidelines Division, particularly Messrs. Allen Cywin, Director, Ernst P. Hall, Deputy Director, Walter J. Hunt, Branch Chief, and Dr. W. Lamar Miller. Special acknowledgement is also made of others in the Effluent Guidelines Division: Messrs. John Nardella, Martin Halper, David Becker, Bruno Maier and Dr. Chester Rhines for their helpful suggestions and timely comments. EGDB project personnel also wishes to acknowledge the assistance of the personnel at the Environmental Protection Agency's regional centers, who helped identify those plants achieving effective waste treatment, and whose efforts provided much of the research necessary for the treatment technology review. A special thanks is extended to Dr. Raymond Loehr for his assistance and guidance throughout the project.

Appreciation is extended to Mr. James Rodgers of the EPA Office of General Counsel for his invaluable input.

In addition Effluent Guidelines Development Branch would like to extend its gratitude to the following individuals for the significant input into the development of this document while serving as members of the EPA working

group/steering committee which provided detailed review, advice, and assistance:

W. Hunt, Chairman, Effluent Guidelines Division
L. Miller, Effluent Guidelines Division
J. Vitalis, Project Officer, Effluent Guidelines Div.
G. Jett, Asst. Project Officer, Effluent Guidelines Div.
J. Ciancia, NERC, Edison, N.J.
H. Skovrenek, NERC, Edison, N.J.
M. Strier, Office of Enforcement
D. Davis, Office of Planning and Evaluation
P. Desrosiers, Office of Research and Development
R. Swank, SERL, Athens, Georgia
E. Krabbe, Region II
L. Reading, Region VII
E. Struzeski, NEIC, Denver, Colorado

EGDB would also like to acknowledge the Pulp Chemicals Association for providing valuable information on tall oil manufacture, and the personnel of selected plants of the gum and wood chemicals manufacturing point source category for their help in the collection of data relating to process RWL and treatment plant performance. Acknowledgment is also extended to the Charcoal Briquet Institute who supplied valuable information for that segment of the study.

The cooperation of the individual gum and wood chemicals companies who offered their facilties for survey and contributed pertinent data is gratefully appreciated. Alphabetically, the companies were:

1. Charlite-Briquets
2. Crosby Chemicals
3. George C. Brcwne & Company
4. K.S. Varne & Company
5. Reichhold Chemical Corporation
6. Tenneco Chemical Company
7. Union Camp Corporation

Manufacturing representatives playing significant parts in the success of this study were:

R.C. Crosby (2)
I. Foster (1)
H.C. Kendall (3)
J.P. Krumbein (5)
W.O. Ralls, Jr. (7)
S. Senzeneau (6)
K.S. Varn, Sr. (4)

Acknowledgement and appreciation is also given to Ms. Kay Starr and Ms. Nancy Zrubek for invaluable support in coordinating the preparation and reproduction of this

report, to Mr. Eric Yunker, Ms. Alice Thompson, Ms. Ernestine Christian, Ms. Laura Cammarota and Ms. Carol Swann of the Effluent Guidelines Division secretarial staff for their efforts in the typing of drafts, necessary revision, and final preparation of the revised Effluent Guidelines Division development document.

SECTION XV

BIBLIOGRAPHY

Gum and Wood Chemicals

1. Biological and Chemical Treatability Studies of an Emulsified Chemical Wastewater for Tenneco Chemicals, Inc., Newport Division, Oakdale, Louisiana; Associated Water and Air Resources Engineers, Inc., Nashville, Tennessee, October 1971.

2. Biological Treatability of the Effluent from an Existing Physical-Chemical Treatment System for an Emulsified Chemical Wastewater for Reichhold Chemicals, Inc, Pensacola, Florida (Oakdale, Louisiana plant); Associated Water and Air Resources Engineers, Inc., Nashville, Tennesee, June 1974.

3. Biological Treatability of Wastewater from the Production of Naval Stores for Reichhold Chemicals, Inc., Pensacola, Florida (Telogia, Florida); Associated Water and Air Resources Engineers, Inc., Nashville, Tennessee, June 1974.

4. Encyclopedia of Chemical Technology, 2nd Edition, Kirk-Othmer, Interscience Publishers Division, John Wiley and Sons, Inc., Vol. 4, 1965.

5. Gardner, Frank H., Jr. and A.R. Williamson; Naval Stores Wastewater Purification and Reuse by Activated Carbon Treatment, Draft report; Grant No. S-80 1431, for EPA, Herbert Skovronek, Industrial Environment Research Laboratory, Edison, New Jersey 08817, October 1975.

6. Kent, J.A., ed. Riegel's Handbood of Industrial Chemistry, Reinhold Publishing Corporation, New York, 1962.

7. Publicity Committee (Zachary, I.G., et al.) "Tall Oil and its Uses," Tall Oil Products Division, Pulp Chemicals Association, F.W. Dodge Company, New York, 1965.

8. Revised Treatment Design for a Tall Oil Waste for Tenneco Chemicals, Inc., Newport Division, Bay Minette, Alabama; Associated Water and Air Resources Engineers, Inc., Nashville, Tennessee, June 1973.

9. Shreve, R.N., Chemical Process Industries, Third Edition McGraw-Hill Book Company, New York, 1967.

10. Supplement A & B - Detailed Record of Data Base for "Development Document for Interim Final Effluent Limitations, Guidelines and Standards of Performance for the Gum and Wood Chemicals Manufacturing Point Source Category", U.S. EPA, Washington, D.C. 20460, April 1976.

11. Treatment and Disposal of Complex Industrial Wastes by C. Schimmel and D. Griffin, a draft report for Office of Research and Development, U.S. Environmental Protection Agency, Washington, D.C. 20460, June 1975.

12. U.S. Bureau of the Census, Census of Manufactures, 1972; Industry Series 1: Industrial Organic Chemicals, MC72(2) - 28F; U.S. Government Printing Office, Washington, D.C. 1974.

13. U.S. Bureau of Census, Census of Manufactures, 1967; Water Use in Manufacturing, MC67(1) - 7; U.S. Government Printing Office, Washington, D.C. 1971.

14. U.S. EPA; Draft Development Document for Effluent Limitations Guidelines and Standards of Performance - Miscellaneous Chemicals Industry, Prepared by Roy F. Weston, Inc. for Effluent Guidelines Division, Washington, D.C. 20460; February 1975.

15. "Development Document for Effluent Limitations Guidelines and New Source Performance Standards for Petroleum Refining Point Source Category, Issued April, 1974, EPA - 440174-014-A, EPA, Washington, D.C. 20460.

References

GR-1 AICHE Environmental Division; "Industrial Process Design for Pollution Control," Volume 4; October, 1971.

GR-2 Allen, E.E.; "How to Combat Control Valve Noise," Chemical Engineering Progress, Vol. 71, No. 8; August, 1975; pp. 43-55.

GR-3 American Public Health Association; Standard Methods for Examination of Water and Waste Water, 13th Edition; APHA, Washington, D.C. 20036; 1971.

GR-4 Barnard, J.L.; "Treatment Cost Relationships for Industrial Waste Treatment," Ph.D. Dissertation, Vanderbilt University; 1971.

GR-5 Bennett, H., editor; Concise Chemical and Technical Dictionary; F.A.I.C. Chemical Publishing Company, Inc., New York, New York; 1962.

GR-6 Blecker, H.G., and Cadman, T.W.; Capital and Operating Costs of Pollution Control Equipment Modules, Volume I - User Guide; EPA-R5-73-023a; EPA Office of Research and Development, Washington, D.C. 20460; July 1973.

GR-7 Blecker, H.G., and Nichols, T.M.; Capital and Operating Costs of Pollution Control Equipment Modules, Volume II - Data Manual; EPA-R5-73-023b; EPA Office of Research and Development, Washington, D.C. 20460; July, 1973.

GR-8 Bruce, R.D., and Werchan, R.E.; "Noise Control in the Petroleum and Chemical Industries," Chemical Engineering Progress, Vol. 71, No. 8; August, 1975; pp. 56-59.

GR-9 Chaffin, C.M.; "Wastewater Stabilization Ponds at Texas Eastman Company."

GR-10 Chemical Coagulation/Mixed Media Filtration of Aerated Lagoon Effluent, EPA-660/2-75-025; Environmental Protection Technology Series, National Environmental Research Center, Office of Research and Development, U.S. EPA, Corvallis, Oregon 97330.

GR-11 Chemical Engineering, August 6, 1973; "Pollution Control at the Source."

GR-12 Chemical Engineering, 68 (2), 1961; "Activated-Sludge Process Solvents Waste Problem."

GR-13 Chemical Week, May 9, 1973; "Making Hard-to-treat Chemical Wastes Evaporate."

GR-14 Cheremisinoff, P.N., and Feller, S.M.; "Wastewater Solids Separation," Pollution Engineering.

GR-15 Control of Hazardous Material Spills, Proceedings of the 1972 National Conference on Control of Hazardous Material Spills, Sponsored by the U.S. Environmental Protection Agency at the University of Texas, March 1972.

GR-16 Cook, C.; "Variability in BOD Concentration from Biological Treatment Plants," EPA internal memorandum; March, 1974.

GR-17 Davis, K.E., and Funk, R.J.; "Deep Well Disposal of Industrial Waste," Industrial Waste; January-February, 1975.

GR-18 Dean, J.A., editor; Lange's Handbook of Chemistry, 11th Edition; McGraw-Hill Book Company, New York, New York; 1973.

GR-19 Eckenfelder, W.W., Jr.; Water Quality Engineering for Practicing Engineers; Barnes and Noble, Inc., New York, New York; 1970.

GR-20 Eckenfelder, W.W., Jr.; "Development of Operator Training Materials," Environmental Science Services Corp., Stamford, Conn.; August, 1968.

GR-21 Environmental Science and Technology, Vol. 8, No. 10, October, 1974; "Currents-Technology."

GR-22 Fassell, W.M.; Sludge Disposal at a Profit?, a report presented at the National Conference on Municipal Sludge Management, Pittsburgh, Pennsylvania; June, 1974.

GR-23 Guidelines for Chemical Plants in the Prevention Control and Reporting of Spills; Manufacturing Chemists Association, Inc., Washington, D.C. 1972.

GR-24 Hauser, E.A., Colloidal Phenomena, 1st Edition, McGraw-Hill Book Company, New York, New York; 1939.

GR-25 Iowa State University Department of Industrial Engineering and Engineering Research Institute, "Estimating Staff and Cost Factors for Small

Wastewater Treatment Plants Less Than 1 MGD," Parts I and II; EPA Grant No. 5P2-WP-195-0452; June, 1973.

GR-26 Iowa State University Department of Industrial Engineering and Engineering Research Institute, "Staffing Guidelines for Conventional Wastewater Treatment Plants Less Than 1 MGD," EPA Grant No. 5P2-WP-195-0452; June, 1973.

GR-27 Judd, S.H.; "Noise Abatement in Existing Refineries," Chemical Engineering Progress, Vol. 71, No. 8; August, 1975; pp. 31-42.

GR-28 Kent, J.A., editor; Reigel's Industrial Chemistry, 7th Edition; Reinhold Publishing Corporation, New York; 1974.

GR-29 Kirk-Othmer; Encyclopedia of Chemical Technology, 2nd Edition; Interscience Publishers Division, John Wiley and Sons, Inc.

GR-30 Kozlorowski, B., and Kucharski, J.; Industrial Waste Disposal; Pergamon Press, New York; 1972.

GR-31 Lindner, G. and K. Nyberg; Environmental Engineering, A Chemical Engineering Discipline; D. Reidel Publishing Company, Boston, Massachusetts 02116, 1973.

GR-32 Liptak, B.G., editor; Environmental Engineers' Handbook, Volume I, Water Pollution; Chilton Book Company, Radnor, Pa.; 1974.

GR-33 Marshall, G.R. and E.J. Middlebrook; Intermittent Sand Filtration to Upgrade Existing Wastewater Treatment Facilities, PR JEW 115-2; Utah Water Research Laboratory, College of Engineering, Utah State University, Logan, Utah 84322; February, 1974.

GR-34 Martin, J.D., Dutcher, V.D., Frieze, T.R., Tapp, M., and Davis, E.M.; "Waste Stabilization Experiences at Union Carbide, Seadrift, Texas Plant."

GR-35 McDermott, G.N.; Industrial Spill Control and Pollution Incident Prevention, J. Water Pollution Control Federation, 43 (8) 1629 (1971).

GR-36 Minear, R.A., and Patterson, J.W.; Wastewater Treatment Technology, 2nd Edition; State of Illinois Institute for Environmental Quality; January, 1973.

GR-37 National Environmental Research Center; "Evaluation of Hazardous Waste Emplacement in Mined Openings;" NERC Contract No. 68-03-0470; September, 1974.

GR-38 Nemerow, N.L.; Liquid Waste of Industry - Theories, Practices and Treatment; Addision-Wesley Pulbishing Company, Reading, Massachusetts; 1971.

GR-39 Novak, S.M.; "Biological Waste Stabilization Ponds at Exxon Company, U.S.A. Baytown Refinery and Exxon Chemical Company, U.S.A. Chemical Plant (Divisions of Exxon Corporation) Baytown, Texas."

GR-40 Oswald, W.J., and Ramani, R.; "The Fate of Algae in Receiving Waters," a paper submitted to the Conference on Ponds as a Wastewater Treatment Alternative, University of Texas, Austin; July, 1975.

GR-41 Otakie, G.F.; A Guide to the Selection of Cost-effective Wastewater Treatment Systems; EPA-430/9-75-002, Technical Report, U.S. EPA, Office of Water Program Operations, Washington, D.C. 20460.

GR-42 Parker, C.L.; Estimating the Cost of Wastewater Treatment Ponds; Pollution Engineering, November, 1975.

GR-43 Parker, W.P.; Wastewater Systems Engineering, Prentice-Hall, Inc., Englewood Cliffs, New Jersey, 1975.

GR-44 Parker, D.S.; "Performance of Alternative Algae Removal Systems," a report submitted to the Conference on Ponds as a Wastewater Treatment Alternative, University of Texas, Austin; July, 1975.

GR-45 Perry, J.H., et. al.; Chemical Engineers' Handbook, 5th Edition; McGraw-Hill Book Company, New York, New York; 1973.

GR-46 Public Law 92-500, 92nd Congress, S.2770; October 18, 1972.

GR-47 Quirk, T.P.; "Application of Computerized Analysis to Comparative Costs of Sludge Dewatering by Vacuum Filtration and Centrifugation," Proc., 23rd Industrial Waste Conference, Purdue University; 1968; pp. 69-709.

GR-48 Riley, B.T., Jr.; The Relationship Between Temperature and the Design and Operation of Biological Waste Treatment Plants, submitted to the Effluent Guidelines Division, EPA; April, 1975.

GR-49 Rose, A., and Rose, E.; The Condensed Chemical Dictionary, 6th Edition; Reinhold Publishing Corporation, New York; 1961.

GR-50 Rudolfs, W.; Industrial Wastes, Their Disposal and Treatment; Reinhold Publishing Corporation, New York; 1953.

GR-51 Sax, N.I.; Dangerous Properties of Industrial Material, 4th Edition; Van Nostrand Reinhold Company, New York; 1975.

GR-52 Seabrook, B.L.; Cost of Wastewater Treatment by Land Application; EPA-430/9-75-003, Technical Report; U.S. EPA, Office of Water Program Operations, Washington, D.C. 20460.

GR-53 Shreve, R.N.; Chemical Process Industries, Third Edition; McGraw-Hill, New York; 1967.

GR-54 Spill Prevention Techniques for Hazardous Polluting Substances, OHM 7102001; U.S. Environmental Protection Agency, Washington, D.C. 20460; February 1971.

GR-55 Stecher, P.G., editor; The Merck Index, An Encyclopedia of Chemicals and Drugs, 8th Edition; Merck and Company, Inc., Rahway, New Jersey; 1968.

GR-56 Stevens, J.I., "The Roles of Spillage, Leakage and Venting in Industrial Pollution Control", Presented at Second Annual Environmental Engineering and Science Conference, University of Louisville, April 1972.

GR-57 Supplement A & B - Detailed Record of Data Base for "Draft Development Document for Interim Final Effluent Limitations, Guidelines and Standards of Performance for the Miscellaneous Chemicals

Manufacturing Point Source Category", U.S. EPA, Washington, D.C. 20460, February 1975.

GR-58 Swanson, C.L.; "Unit Process Operating and Maintenance Costs for Conventional Waste Treatment Plants;" FWQA, Cincinnati, Ohio; June, 1968.

GR-59 U.S. Department of Health, Education, and Welfare; "Interaction of Heavy Metals and Biological Sewage Treatment Processes," Environmental Health Series; HEW Office of Water Supply and Pollution Control, Washington, D.C.; May, 1965.

GR-60 U.S. Department of the Interior; "Cost of Clean Water," Industrial Waste Profile No. 3; Dept. of Int. GWQA, Washington, D.C.; November, 1967.

GR-61 U.S. EPA; Process Design Manual for Upgrading Existing Waste Water Treatment Plants, U.S. EPA Technology Transfer; EPA, Washington, D.C. 20460; October, 1974.

GR-62 U.S. EPA; Monitoring Industrial Waste Water, U.S. EPA Technology Transfer; EPA, Washington, D.C. 20460; August, 1973.

GR-63 U.S. EPA; Methods for Chemical Analysis of Water and Wastes, U.S. EPA Technology Transfer; EPA 625/6-74-003; Washington, D.C. 20460; 1974.

GR-64 U.S. EPA; Handbook for Analytical Quality Control in Water and Waste Water Laboratories, U.S. EPA Technology Transfer; EPA, Washington, D.C. 20460; June, 1972.

GR-65 U.S. EPA; Process Design Manual for Phosphorus Removal, U.S. EPA Technology Transfer; EPA, Washington, D.C. 20460; October, 1971.

GR-66 U.S. EPA; Process Design Manual for Suspended Solids Removal, U.S. EPA Technology Transfer; EPA 625/1-75-003a, Washington, D.C. 20460; January, 1975.

GR-67 U.S. EPA; Process Design Manual for Sulfide Control in Sanitary Sewerage Systems, U.S. EPA Technology Transfer; EPA, Washington, D.C. 20460; October, 1974.

GR-68 U.S. EPA; Process Design Manual for Carbon Adsorption, U.S. EPA Technology Transfer; EPA, Washington, D.C. 20460; October, 1973.

GR-69 U.S. EPA; Process Design Manual for Sludge Treatment and Disposal, U.S. EPA Technology Transfer; EPA 625/1-74-006, Washington, D.C. 20460; October, 1974.

GR-70 U.S. EPA; Effluent Limitations Guidelines and Standards of Performance, Metal Finishing Industry, Draft Development Document; EPA 440/1-75/040 and EPA 440/1-75/040a; EPA Office of Air and Water Programs, Effluent Guidelines Division, Washington, D.C. 20460; April, 1975.

GR-71 U.S. EPA; Development Document for Effluent Limitations Guidelines and Standards of Performance - Organic Chemicals Industry; EPA 440/1-74/009a; EPA Office of Air and Water Programs, Effluent Guidelines Division, Washington, D.C. 20460; April, 1974.

GR-72 U.S. EPA; Draft Development Document for Effluent Limitations Guidelines and Standards of Performance - Steam Supply and Noncontact Cooling Water Industries; EPA Office of Air and Water Programs, Effluent Guidelines Division, Washington, D.C. 20460; October, 1974.

GR-73 U.S. EPA; Draft Development Document for Effluent Limitations Guidelines and Standards of Performance - Organic Chemicals Industry, Phase II Prepared by Roy F. Weston, Inc. under EPA Contract No. 68-01-1509; EPA Office of Air and Water Programs, Effluent Guidelines Division, Washington, D.C. 20460; February, 1974.

GR-74 U.S. EPA; Evaluation of Land Application Systems, Technical Bulletin; EPA 430/9-75-001; EPA, Washington, D.C. 20460; March, 1975.

GR-75 U.S. EPA; "Projects in the Industrial Pollution Control Division," Environmental Protection Technology Series; EPA 600/2-75-001; EPA, Washington, D.C. 20460; December, 1974.

GR-76 U.S. EPA; Wastewater Sampling Methodologies and Flow Measurement Techniques; EPA 907/9-74-005; EPA

Surveillance and Analysis, Region VII, Technical Support Branch; June, 1974.

GR-77 U.S. EPA; A Primer on Waste Water Treatment; EPA Water Quality Office; 1971.

GR-78 U.S. EPA; Compilation of Municipal and Industrial Injection Wells in the United States; EPA 520/9-74-020; Vol. I and II; EPA, Washington, D.C. 20460; 1974.

GR-79 U.S. EPA; "Upgrading Lagoons," U.S. EPA Technology Transfer; EPA, Washington, D.C. 20460; August, 1973.

GR-80 U.S. EPA; "Nitrification and Denitrification Facilities," U.S. EPA Technology Transfer; August, 1973.

GR-81 U.S. EPA; "Physical-Chemical Nitrogen Removal," U.S. EPA Technology Transfer; EPA, Washington, D.C. 20460; July, 1974.

GR-82 U.S. EPA; "Physical-Chemical Wastewater Treatment Plant Design," U.S. EPA Technology Transfer; EPA, Washington, D.C. 20460; August, 1973.

GR-83 U.S. EPA; "Oxygen Activated Sludge Wastewater Treatment Systems, Design Criteria and Operating Experience," U.S. EPA Technology Transfer; EPA, Washington, D.C. 20460; August, 1973.

GR-84 U.S. EPA; Wastewater Filtration Design Considerations; U.S. EPA Technology Transfer; EPA, Washington, D.C. 20460; July, 1974.

GR-85 U.S. EPA; "Flow Equalization," U.S. EPA Technology Transfer; EPA, Washington, D.C. 20460; May, 1974.

GR-86 U.S. EPA; "Procedural Manual for Evaluating the Performance of Wastewater Treatment Plants," U.S. EPA Technology Transfer; EPA, Washington, D.C. 20460.

GR-87 U.S. EPA; Supplement to Development Document for Effluent Limitations, Guidelines and New Source Performance Standards for the Corn Milling Subcategory, Grain Processing, EPA, Office of Air and Water Programs, Effluent Guidelines Division, Washington, D.C. 20460, August 1975.

GR-88 U.S. EPA; Pretreatment of Pollutants Introduced Into Publicly Owned Treatment Works; EPA Office of Water Program Operations, Washington, D.C. 20460; October, 1973.

GR-89 U.S. Government Printing Office; Standard Industrial Classification Manual; Government Printing Office, Washington, D.C. 20492; 1972.

GR-90 U.S. EPA; Tertiary Treatment of Combined Domestic and Industrial Wastes, EPA-R2-73-236, EPA, Washington, D.C. 20460; May, 1973.

GR-91 Wang, Lawrence K.; Environmental Engineering Glossary (Draft) Calspan Corporation, Environmental Systems Division, Buffalo, New York 14221, 1974.

GR-92 Water Quality Criteria 1972, EPA-R-73-033, National Academy of Sciences and National Academy of Engineering; U.S. Government Printing Office, No. 5501-00520, March, 1973.

GR-93 Weast, R., editor; CRC Handbook of Chemistry and Physics, 54th Edition; CRC Press, Cleveland, Ohio 44128; 1973-1974.

GR-94 Weber, C.I., editor; Biological Field and Laboratory Methods for Measuring the Quality of Surface Waters and Effluents," Environmental Monitoring Series; EPA 670/4-73-001; EPA, Cincinnati, Ohio 45268; July, 1973.

GR-95 APHA, ASCE, AWWA, and WPCF, Glossary of Water and Wastewater Control Engineering, American Society of Civil Engineers, New York, 1969.

SECTION XVI

GLOSSARY

Gum and Wood Chemicals

Carbonization. A process whereby a carbon residue is produced via the destructive distillation of wood.

Destructive Distillation. Decomposition of wood (or a hydrocarbon) by heat in a closed container and the collection of the volatile substances produced.

Essential Oils. Oils composed mainly of terpene hydrocarbons (turpentine), which are obtained by steam distillation of wood chips, bark, or leaves of select trees.

Ester Gum. A resin made from rosin or rosin acids and a polyhydric alcohol, such as glycerin or pentaerythritol.

Exudate. Exuded matter.

Exude. To ooze or trickle forth through pores or gushes, as sweat or gum, etc.

Fines. Crushed solids sufficiently fine to pass through a screen, etc.

Gum. The crystallized pine oleoresin or "scrape" collected from scarified "faces" of trees being worked for turpentine, exudates from living long leaf and slash pine trees.

Hardwood (or Deciduous Woods). Trees that lose their leaves annually. Morphologically and chemically distinct from the conifers and commonly referred to as hardwoods, despite the fact that certain species such as basswood and poplar have woods that are relatively soft. Fibers are substantially shorter that those of coniferous wood. Normally, deciduous woods are not a source of turpentine.

Kraft (or Sulfate) Process. The digestion of wood chips with a solution of sodium hydroxide, sodium sulfide, and sodium carbonate to product paper pulp. This process delignifies the wood chip and allows separation of the cellulose fibers from a caustic solution of lignin degradation products (sugars, hemicellulose, resin, and fatty acids) and unsaponifiables.

Naval Stores. Chemically reactive oils, resins, tars, and pitches derived from the oleoresin contained in, exuded by, or extracted from trees chiefly of the pine species (Genus Pinus), or from the wood of such trees.

Non-condensibles. Vapors or gases that remain in the gaseous state at the temperature and pressure specified. These normally would be considered the final vented gases under operating conditions.

Oleoresin. Pine gum, the non-aqueous secretion of rosin acids dissolved in a terpene hydrocarbon oil which is produced or exuded from the intercellular resin ducts of a living tree or accumulated, together with oxidation products, in the dead wood of weathered limbs and stumps.

Pine Tar Oil. The oil obtained by condensing the vapors from the retorts in which resinous pine wood is destructively distilled (carbonized).

Pitch. A dark viscous substance obtained as residue in the distillation of the volatile oils from retort pine oil or crude tall oil.

Pitch, Brewer's. A term used to designate a type of pitch made by blending certain oils, waxes, or other ingredients with rosin for the coating of beer barrels.

Pyroligeneous Acid. A product of the destructive distillation of hardwoods composed primarily of acetic acid, crude methanol, acetone, tars and oils, and water.

Resin. A large class of synthetic products that have properties similar to natural resin, or rosin, but are chemically different.

Retort. A vessel in which substances are distilled or decomposed by heat.

Rosin. A specific kind of natural resin obtained as a nitreous water-insoluble material from pine oleoresin by removal of the volatile oils, or from tall oil by the removal of the fatty acid components thereof. It consists primarily of tricyclic monocarboxylic acids having the general empirical formula $C_{20}H_{30}O_2$, with small quantities of compounds saponifiable with boiling alcoholic potassium or sodium hydroxide, and some unsaponifiable. The three general classifications of kinds of rosin in commerce are: gum rosin, obtained from the oleoresin collected from living trees; wood rosin, from the oleoresin contained in dead

wood, such as stumps and knots; and tall oil rosin, from tall oil.

Rosin Modified. Rosin that has been treated with heat or catalysts, or both; with or without added chemical substances, so as to cause substantial change in the structure of the rosin acids, as isomerization, hydrogenation, dehydrogenation, or polymerization; without substantial effect on the carboxyl group.

Saponification. The reaction in which caustic combines with fat or oil to produce soap.

Seal Leg. The line through which an underflow liquid flows, constructed to maintain a liquid trap that will not empty upon nominal pressure changes in the vessel.

Separator. The vessel connected to the vent-relief to separate wood fines carried over in the vent-relief gases, and which permits the steam and turpentine vapors (including non-condensables) to proceed in vapor form to the condenser.

Sparge. To heat a liquid by means of live steam entering through a perforated or nozzled pipe.

Tall Oil. A generic name for a number of products obtained from the manufacture of wood pulp by the alkali (sulfate) process, more popularly known as the Kraft process. To provide some distinction between the various products, designations are often applied in accordance with the process or composition, some of which are crude tall oil, acid-refined tall oil, distilled tall oil, tall oil fatty acids, and tall oil rosin.

Tall Oil, Crude. A dark brown mixture of fatty acids, rosin, and neutral materials liberated by the acidification of soap skimmings. The fatty acids are a mixture of oleic acid and linoleic acid with lesser amounts of saturated and other unsaturated fatty acids. The rosin is composed of resin acids similar to those found in gum and wood rosin. The neutral materials are composed mostly of polycyclic hydrocarbons, sterols, and other high-molecular-weight alcohols.

Terpenes. The major chemical components of turpentine. A class of unsaturated organic compounds having the empirical formula C10 H16, occurring in most essential oils and oleoresinous plants. Structurally, the important terpenes and their derivatives are classified as monocyclic (dipentene), bicyclic (pinene), and acyclic (myrcene).

Turpentine. A light-colored, volatile essential oil from resinuous exudates or resinous wood associated with living or dead coniferous kinds of turpentine as follows: (1) gum turpentine, obtained by distilling the gum collected from living pine trees; (2) steam-distilled wood turpentine, from the oleoresin within the wood of pine stumps or cuttings, either by direct steaming of mechanically disintegrated wood or after solvent extraction of the oleoresin from the wood; (3) sulfate wood turpentine, recovered during the conversion of wood pulp by the Kraft (sulfate) process. (Sulfate wood turpentine is somewhat similar to gum turpentine in composition); and (4) destructively distilled wood turpentine, obtained by fractionation of certain oils recovered from the destructive distillation of pine wood.

General Definitions

Abatement. The measures taken to reduce or eliminate pollution.

Absorption. A process in which one material (the absorbent) takes up and retains another (the absorbate) with the formation of a homogeneous mixture having the attributes of a solution. Chemical reaction may accompany or follow absorption.

Acclimation. The ability of an organism to adapt to changes in its immediate environment.

Acid. A substance which dissolves in water with the formation of hydrogen ions.

Acid Solution. A solution with a pH of less than 7.00 in which the activity of the hydrogen ion is greater than the activity of the hydroxyl ion.

Acidity. The capacity of a wastewater for neutralizing a base. It is normally associated with the presence of carbon dioxide, mineral and organic acids and salts of strong acids or weak bases. It is reported as equivalent of $CaCO_3$ because many times it is not known just what acids are present.

Acidulate. To make somewhat acidic.

Act. The Federal Water Pollution Control Act Amendments of 1972, Public Law 92-500.

Activated Carbon. Carbon which is treated by high-temperature heating with steam or carbon dioxide producing an internal porous particle structure.

Activated Sludge Process. A process which removes the organic matter from sewage by saturating it with air and biologically active sludge. The recycle "activated" microoganisms are able to remove both the soluble and colloidal organic material from the wastewater.

Adsorption. An advanced method of treating wastes in which a material removes organic matter not necessarily responsive to clarification or biological treatment by adherence on the surface of solid bodies.

Adsorption Isotherm. A plot used in evaluating the effectiveness of activated carbon treatment by showing the amount of impurity adsorbed versus the amount remaining. They are determined at a constant temperature by varying the amount of carbon used or the concentration of the impurity in contact with the carbon.

Advance Waste Treatment. Any treatment method or process employed following biological treatment to increase the removal of pollution load, to remove substances that may be deleterious to receiving waters or the environment or to produce a high-quality effluent suitable for reuse in any specific manner or for discharge under critical conditions. The term tertiary treatment is commonly used to denote advanced waste treatment methods.

Aeration. (1) The bringing about of intimate contact between air and a liquid by one of the following methods: spraying the liquid in the air, bubbling air through the liquid, or agitation of the liquid to promote surface absorption of air. (2) The process or state of being supplied or impregnated with air; in waste treatment, a process in which liquid from the primary clarifier is mixed with compressed air and with biologically active sludge.

Aeration Period. (1) The theoretical time, usually expressed in hours, that the mixed liquor is subjected to aeration in an aeration tank undergoing activated-sludge treatment. It is equal to the volume of the tank divided by the volumetric rate of flow of wastes and return sludge. (2) The theoretical time that liquids are subjected to aeration.

Aeration Tank. A vessel for injecting air into the water.

Aerobic. Ability to live, grow, or take place only where free oxygen is present.

Aerobic Biological Oxidation. Any waste treatment or process utilizing aerobic organisms, in the presence of air or oxygen, as agents for reducing the pollution load or oxygen demand of organic substances in waste.

Aerobic Digestion. A process in which microorganisms obtain energy by endogenous or auto-oxidation of their cellular protoplasm. The biologically degradable constituents of cellular material are slowly oxidized to carbon dioxide, water and ammonia, with the ammonia being further converted into nitrates during the process.

Algae. One-celled or many-celled plants which grow in sunlit waters and which are capable of photosynthesis. They are a food for fish and small aquatic animals and, like all plants, put oxygen in the water.

Algae Bloom. Large masses of microscopic and macroscopic plant life, such as green algae, occuring in bodies of water.

Algicide. Chemical agent used to destroy or control algae.

Alkali. A water-soluble metallic hydroxide that ionizes strongly.

Alkalinity. The presence of salts of alkali metals. The hydroxides, carbonates and bicarbonates of calcium, sodium and magnesium are common impurities that cause alkalinity. A quantitative measure of the capacity of liquids or suspensions to neutralize strong acids or to resist the establishment of acidic conditions. Alkalinity results from the presence of bicarbonates, carbonates, hydroxides, alkaline salts and occasionally borates and is usually expressed in terms of the amount of calcium carbonate that would have an equivalent capacity to neutralize strong acids.

Alum. A hydrated aluminum sulfate or potassium aluminum sulfate or ammonium aluminum sulfate which is used as a settling agent. A coagulant.

Ammonia Nitrogen. A gas released by the microbiological decay of plant and animal proteins. When ammonia nitrogen is found in waters, it is indicative of incomplete treatment.

Ammonia Stripping. A modification of the aeration process for removing gases in water. Ammonium ions in wastewater exist in equilibrium with ammonia and hydrogen ions. As pH increases, the equilibrium shifts to the right, and above pH 9 ammonia may be liberated as a gas by agitating the wastewater in the presence of air. This is usually done in a packed tower with an air blower.

Ammonification. The process in which ammonium is liberated from organic compounds by microoganisms.

Anaerobic. Ability to live, grow, or take place where there is no air or free oxygen present.

Anaerobic Biological Treatment. Any treatment method or process utilizing anaerobic or facultative organisms, in the absence of air, for the purpose of reducing the organic matter in wastes or organic solids settled out from wastes.

Anaerobic Digestion. Biodegradable materials in primary and excess activated sludge are stabilized by being oxidized to carbon dioxide, methane and other inert products. The primary digester serves mainly to reduce VSS, while the secondary digester is mainly for solids-liquid separation, sludge thickening and storage.

Anion. Ion with a negative charge.

Antagonistic Effects. The simultaneous action of separate agents mutually opposing each other.

Aqueous Solution. One containing water or watery in nature.

Aquifer. A geologic formation or stratum that contains water and transmits it from one point to another in quantities sufficient to permit economic development (capable of yielding an appreciable supply of water).

Aqueous Solution. One containing water or watery in nature.

Arithmetic Mean. The arithmetic mean of a number of items is obtained by adding all the items together and dividing the total by the number of items. It is frequently called the average. It is greatly affected by extreme values.

Azeotrope. A liquid mixture that is characterized by a constant minimum or maximum boiling point which is lower or higher than that of any of the components and that distills without change in composition.

Backwashing. The process of cleaning a rapid sand or mechanical filter by reversing the flow of water.

Bacteria. Unicellular, plant-like microorganisms, lacking chlorophyll. Any water supply contaminated by sewage is certain to contain a bacterial group called "coliform".

Bateria, Coliform Group. A group of bacteria, predominantly inhabitants of the intestine of man but also found on vegetation, including all aerobic and facultative anaerobic gram-negative, non-sporeforming bacilli that ferment lactose with gas formation. This group includes five tribes of which the very great majority are Eschericheae. The Eschericheae tribe comprises three genera and ten species, of which Escherichia Coli and Aerobacter Aerogenes are dominant. The Escherichia Coli are normal inhabitants of the intestine of man and all vertbrates whereas Aerobacter Aerogenes normally are found on grain and plants, and only to a varying degree in the intestine of man and animals. Formerly referred to as B. Coli, B. Coli group, and Coli-Aerogenes Group.

Bacterial Growth. All bacteria require food for their continued life and growth and all are affected by the conditions of their environment. Like human beings, they consume food, they respire, they need moisture, they require heat, and they give off waste products. Their food requirements are very definite and have been, in general, already outlined. Without an adequate food supply of the type the specific organism requires, bacteria will not grow and multiply at their maximum rate and they will therefore, not perform their full and complete functions.

(BADCT) NSPS Effluent Limitations. Limitations for new sources which are based on the application of the Best Available Demonstrated Control Technology. See NSPS.

Base. A substance that in aqueous solution turns red litmus blue, furnishes hydroxyl ions and reacts with an acid to form a salt and water only.

Batch Process. A process which has an intermittent flow of raw materials into the process and a resultant intermittent flow of product from the process.

BAT(BATEA) Effluent Limitations. Limitations for point sources, other than publicly owned treatment works, which are based on the application of the Best Available Technology Economically Achievable. These limitations must be achieved by July 1, 1983.

Benthic. Attached to the bottom of a body of water.

Benthos. Organisms (fauna and flora) that live on the bottoms of bodies of water.

Bioassay. An assessment which is made by using living organisms as the sensors.

Biochemical Oxygen Demand (BOD). A measure of the oxygen required to oxidize the organic material in a sample of wastewater by natural biological process under standard conditions. This test is presently universally accepted as the yardstick of pollution and is utilized as a means to determine the degree of treatment in a waste treatment process. Usually given in mg/l (or ppm units), meaning milligrams of oxygen required per liter of wastewater, it can also be expressed in pounds of total oxygen required per wastewater or sludge batch. The standard BOD is five days at 20 degrees C.

Biota. The flora and fauna (plant and animal life) of a stream or other water body.

Biological Treatment System. A system that uses microorganisms to remove organic pollutant material from a wastewater.

Blowdown. Water intentionally discharged from a cooling or heating system to maintain the dissolved solids concentration of the circulating water below a specific critical level. The removal of a portion of any process flow to maintain the constituents of the flow within desired levels. Process may be intermittent or continuous. 2) The water discharged from a boiler or cooling tower to dispose of accumulated salts.

BOD5. Biochemical Oxygen Demand (BOD) is the amount of oxygen required by bacteria while stabilizing decomposable organic matter under aerobic conditions. The BOD test has been developed on the basis of a 5-day incubation period (i.e. BOD5).

Boiler Blowdown. Wastewater resulting from purging of solid and waste materials from the boiler system. A solids build up in concentration as a result of water evaporation (steam generation) in the boiler.

BPT (BPCTCA) Effluent Limitations. Limitations for point sources, other than publicly owned treatment works, which are based on the application of the Best Practicable Control

Technology Currently Available. These limitations must be achieved by July 1, 1977.

Break Point. The point at which impurities first appear in the effluent of an adsorption filter bed (e.g., granular carbon).

Break Point Chlorination. The addition of sufficient chlorine to destroy or oxidize all substances that creates a chlorine demand with an excess amount remaining in the free residual state.

Brine. Water saturated with a salt.

Buffer. A solution containing either a weak acid and its salt or a weak base and its salt which thereby resists changes in acidity or basicity, resists changes in pH.

Carbohydrate. A compound of carbon, hydrogen and oxygen, usually having hydrogen and oxygen in the proportion of two to one.

Carbonaceous. Containing or composed of carbon.

Catalyst. A substance which changes the rate of a chemical reaction but undergoes no permanent chemical change itself.

Cation. The ion in an electrolyte which carries the positive charge and which migrates toward the cathode under the influence of a potential difference.

Caustic Soda. In its hydrated form it is called sodium hydroxide. Soda ash is sodium carbonate.

Cellulose. The fibrous constituent of trees which is the principal raw material of paper and paperboard. Commonly thought of as a fibrous material of vegetable origin.

Chemical Oxygen Demand (COD). A measure of oxygen-consuming capacity of organic and inorganic matter present in water or wastewater. It is expressed as the amount of oxygen consumed from a chemical oxidant in a specific test. It does not differentiate between stable and unstable organic matter and thus does not correlate with biochemical oxygen demand.

Chemical Synthesis. The processes of chemically combining two or more constituent substances into a single substance.

Chlorination. The application of chlorine to water, sewage or industrial wastes, generally for the purpose of disinfection but frequently for accomplishing other biological or chemical results.

Clarification. Process of removing turbidity and suspended solids by settling. Chemicals can be added to improve and speed up the settling process through coagulation.

Clarifier. A basin or tank in which a portion of the material suspended in a wastewater is settled.

Clays. Aluminum silicates less than 0.002mm (2.0 um) in size. Therefore, most clay types can go into colloidal suspension.

Coagulation. The clumping together of solids to make them settle out of the sewage faster. Coagulation of solids is brought about with the use of certain chemicals, such as lime, alum or polyelectrolytes.

Coagulation and Flocculation. Processes which follow sequentially.

Coagulation Chemicals. Hydrolyzable divalent and trivalent metallic ions of aluminum, magnesium, and iron salts. They include alum (aluminum sulfate), quicklime (calcium oxide), hydrated lime (calcium hydroxide), sulfuric acid, anhydrous ferric chloride. Lime and acid affect only the solution pH which in turn causes coagulant precipitation, such as that of magnesium.

Coliform. Those bacteria which are most abundant in sewage and in streams containing feces and other bodily waste discharges. See bacteria, coliform group.

Coliform Organisms. A group of bacteria recognized as indicators of fecal pollution.

Colloid. A finely divided dispersion of one material (0.01-10 micron-sized particles), called the "dispersed phase" (solid), in another material, called the "dispersion medium" (liquid).

Color Bodies. Those complex molecules which impart color to a solution.

Color Units. A solution with the color of unity contains a mg/l of metallic platinum (added as potassium chloroplatinate to distilled water). Color units are

defined against a platinum-cobalt standard and are based, as are all the other water quality criteria, upon those analytical methods described in Standard Methods for the Examination of Water and Wastewater, 12 ed., Amer. Public Health Assoc., N.Y., 1967.

Combined Sewer. One which carries both sewage and storm water run-off.

Composite Sample. A combination of individual samples of wastes taken at selected intervals, generally hourly for 24 hours, to minimize the effect of the variations in individual samples. Individual samples making up the composite may be of equal volume or be roughly apportioned to the volume of flow of liquid at the time of sampling.

Composting. The biochemical stabilization of solid wastes into a humus-like substance by producing and controlling an optimum environment for the process.

Concentration. The total mass of the suspended or dissolved particles contained in a unit volume at a given temperature and pressure.

Conductivity. A reliable measurement of electrolyte concentration in a water sample. The conductivity measurement can be related to the concentration of dissolved solids and is almost directly proportional to the ionic concentration of the total electrolytes.

Contact Stabilization. Aerobic digestion.

Contact Process Wastewaters. These are process-generated wastewaters which have come in direct or indirect contact with the reactants used in the process. These include such streams as contact cooling water, filtrates, centrates, wash waters, etc.

Continuous Process. A process which has a constant flow of raw materials into the process and resultant constant flow of product from the process.

Contract Disposal. Disposal of waste products through an outside party for a fee.

Crustaceae. These are small animals ranging in size from 0.2 to 0.3 millimeters long which move very rapidly through the water in search of food. They have recognizable head and posterior sections. They form a principal source of

food for small fish and are found largely in relatively fresh natural water.

Crystallization. The formation of solid particles within a homogeneous phase. Formation of crystals separates a solute from a solution and generally leaves impurities behind in the mother liquid.

Curie. 3.7×10^{10} disintegrations per second within a given quantity of material.

Cyanide. Total cyanide as determined by the test procedure specified in 40 CFR Part 136 (Federal Register, Vol. 38, no. 199, October 16, 1973).

Cyclone. A conical shaped vessel for separating either entrained solids or liquid materials from the carrying air or vapor. The vessel has a tangential entry nozzle at or near the largest diameter, with an overhead exit for air or vapor and a lower exit for the more dense materials.

Cyanide A. Cyanides amendable to chlorination as described in "1972 Annual Book of ASTM Standards" 1972: Standard D 2036-72, Method B, p. 553.

Degreasing. The process of removing greases and oils from sewage, waste and sludge.

Demineralization. The total removal of all ions.

Denitrification. Bacterial mediated reduction of nitrate to nitrite. Other bacteria may act on the nitrite reducing it to ammonia and finally N2 gas. This reduction of nitrate occurs under anaerobic conditions. The nitrate replaces oxygen as an electron acceptor during the metabolism of carbon compounds under anaerobic conditions. A biological process in which gaseous nitrogen is produced from nitrite and nitrate. The heterotrophic microoganisms which participate in this process include pseudomonades, achromobacters and bacilli.

Derivative. A substance extracted from another body or substance.

Desorption. The opposite of adsorption. A phenomenon where an adsorbed molecule leaves the surface of the adsorbent.

Diluent. A diluting agent.

Disinfection. The process of killing the larger portion (but not necessarily all) of the harmful and objectionable microorganisms in or on a medium.

Dissolved Air Flotation. The term "flotation" indicates something floated on or at the surface of a liquid. Dissolved air flotation thickening is a process that adds energy in the form of air bubbles, which become attached to suspended sludge particles, increasing the buoyancy of the particles and producing more positive flotation.

Dissolved Oxygen (DO). The oxygen dissolved in sewage, water or other liquids, usually expressed either in milligrams per liter or percent of saturation. It is the test used in BOD determination.

Distillation. The separation, by vaporization, of a liquid mixture of miscible and volatile substance into individual components, or, in some cases, into a group of components. The process of raising the temperature of a liquid to the boiling point and condensing the resultant vapor to liquid form by cooling. It is used to remove substances from a liquid or to obtain a pure liquid from one which contains impurities or which is a mixture of several liquids having different boiling temperatures. Used in the treatment of fermentation products, yeast, etc., and other wastes to remove recoverable products.

DO Units. The units of measurement used are milligrams per liter (mg/l) and parts per million (ppm), where mg/l is defined as the actual weight of oxygen per liter of water and ppm is defined as the parts actual weight of oxygen dissolved in a million parts weight of water, i.e., a pound of oxygen in a million pounds of water is 1 ppm. For practical purposes in pollution control work, these two are used interchangeably; the density of water is so close to 1 g/cm^3 that the error is negligible. Similarly, the changes in volume of oxygen with changes in temperature are insignificant. This, however, is not true if sensors are calibrated in percent saturation rather than in mg/l or ppm. In that case, both temperature and barometric pressure must be taken into consideration.

Drift. Entrained water carried from a cooling device by the exhaust air.

Dual Media. A deep-bed filtration system utilizing two separate and discrete layers of dissimilar media (e.g., anthracite and sand) placed one on top of the other to perform the filtration function.

Ecology. The science of the interrelations between living organisms and their environment.

Effluent. A liquid which leaves a unit operation or process. Sewage, water or other liquids, partially or completely treated or in their natural states, flowing out of a reservoir basin, treatment plant or any other unit operation. An influent is the incoming stream.

Elution. (1) The process of washing out, or removing with the use of a solvent. (2) In an ion exchange process it is defined as the stripping of adsorbed ions from an ion exchange resin by passing through the resin solutions containing other ions in relatively high concentrations.

Elutriation. A process of sludge conditioning whereby the sludge is washed, either with fresh water or plant effluent, to reduce the sludge alkalinity and fine particles, thus decreasing the amount of required coagulant in further treatment steps, or in sludge dewatering.

Emulsion. Emulsion is a suspension of fine droplets of one liquid in another.

Entrainment Separator. A device to remove liquid and/or solids from a gas stream. Energy source is usually derived from pressure drop to create centrifugal force.

Environment. The sum of all external influences and conditions affecting the life and the development of an organism.

Equalization Basin. A holding basin in which variations in flow and composition of a liquid are averaged. Such basins are used to provide a flow of reasonably uniform volume and composition to a treatment unit.

Esterification. This generally involves the combination of an alcohol and an organic acid to produce an ester and water The reaction is carried out in the liquid phase, with aqueous sulfuric acid as the catalyst. The use of sulfuric acid has in the past caused this type of reaction to be called sulfation.

Eutrophication. The process in which the life-sustaining quality of a body of water is lost or diminished (e.g., aging or filling in of lakes). A eutrophic condition is one in which the water is rich in nutrients but has a seasonal oxygen deficiency.

Evapotranspiration. The loss of water from the soil both by evaporation and by transpiration from the plants growing thereon.

Facultative. Having the power to live under different conditons (either with or without oxygen).

Facultative Lagoon. A combination of the aerobic and anaerobic lagoons. It is divided by loading and thermal stratifications into an aerobic surface and an anaerobic bottom, therefore the principles of both the aerobic and anaerobic processes apply.

Fatty Acids. An organic acid obtained by the hydrolysis (saponification) of natural fats and oils, e.g., stearic and palmitic acids. These acids are monobasic and may or may not contain some double bonds. They usually contain sixteen or more carbon atoms.

Fauna. The animal life adapted for living in a specified environment.

Fermentation. Oxidative decomposition of complex substances through the action of enzymes or ferments produced by microorganisms.

Filter, Trickling. A filter consisting of an artificial bed of coarse material, such as broken stone, clinkers, slate, slats or brush, over which sewage is distributed and applied in drops, films for spray, from troughs, drippers, moving distributors or fixed nozzles. The sewage trickles through to the underdrains and has the opportunity to form zoogleal slimes which clarify and oxidize the sewage.

Filter, Vacuum. A filter consisting of a cylindrical drum mounted on a horizontal axis and covered with a filter cloth. The filter revolves with a partial submergence in the liquid, and a vacuum is maintained under the cloth for the larger part of each revolution to extract moisture. The cake is scraped off continuously.

Filtrate. The liquid fraction that is separated from the solids fraction of a slurry through filtration.

Filtration, Biological. The process of passing a liquid through a biological filter containing media on the surfaces of which zoogleal films develop that absorb and adsorb fine suspended, colloidal and dissolved solids and that release various biochemical end products.

Flocculants. Those water-soluble organic polyelectrolytes that are used alone or in conjunction with inorganic coagulants such as lime, alum or ferric chloride or coagulant aids to agglomerate solids suspended in aqueous systems or both, The large dense flocs resulting from this process permit more rapid and more efficient solids-liquid separations.

Flocculation. The formation of flocs. The process step following the coagulation-precipitation reactions which consists of bringing together the colloidal particles. It is the agglomeration by organic polyelectroytes of the small, slowly settling flocs formed during coagulation into large flocs which settle rapidly.

Flora. The plant life characteristic of a region.

Flotation. A method of raising suspended matter to the surface of the liquid in a tank as scum-by aeration, vacuum, evolution of gas, chemicals, electrolysis, heat or bacterial decomposition and the subsequent removal of the scum by skimming.

Fractionation (or Fractional Distillation). The separation of constituents, or group of constituents, of a liquid mixture of miscible and volatile substances by vaporization and recondensing at specific boiling point ranges.

Fungus. A vegetable cellular organism that subsists on organic material, such as bacteria.

Gland. A device utilizing a soft wear-resistant material used to minimize leakage between a rotating shaft and the stationary portion of a vessel such as a pump.

Gland Water. Water used to lubricate a gland. Sometimes called "packing water."

Grab Sample. (1) Instantaneous sampling. (2) A sample taken at a random place in space and time.

Grease. In sewage, grease includes fats, waxes, free fatty acids, calcium and magnesium soaps, mineral oils and other nonfatty materials. The type of solvent to be used for its extraction should be stated.

Grit Chamber. A small detention chamber or an enlargement of a sewer designed to reduce the velocity of flow of the liquid and permit the separation of mineral from organic solids by differential sedimentation.

Groundwater. The body of water that is retained in the saturated zone which tends to move by hydraulic gradient to lower levels.

Hardness. A measure of the capacity of water for precipitating soap. It is reported as the hardness that would be produced if a certain amount of $CaCO_3$ were dissolved in water. More than one ion contributes to water hardness. The "Glossary of Water and Wastewater Control Engineering" defines hardness as: A characteristic of water, imparted by salts of calcium, magnesium, and ion, such as bicarbonates, carbonates, sulfates, chlorides, and nitrates, that causes curdling of soap, deposition of scale in boilers, damage in some industrial processes, and sometimes objectionable taste. Calcium and magnesium are the most significant constituents.

Heavy Metals. A general name given for the ions of metallic elements, such as copper, zinc, iron, chromium, and aluminum. They are normally removed from a wastewater by the formation of an insoluble precipitate (usually a metallic hydroxide).

Hydrocarbon. A compound containing only carbon and hydrogen.

Hydrolysis. A chemical reaction in which water reacts with another substance to form one or more new substances.

Incineration. The combustion (by burning) of matter (e.g., wastewater sludge).

Influent. Any sewage, water or other liquid, either raw or partly treated, flowing into a reservoir, basin, treatment plant, or any part thereof. The influent is the stream entering a unit operation; the effluent is the stream leaving it.

In-Plant Measures. Technology applied within the manufacturing process to reduce or eliminate pollutants in the raw waste water. Sometimes called "internal measures" or "internal controls".

Ion. An atom or group of atoms possessing an electrical charge.

Ion Exchange. A reversible interchange of ions between a liquid and a solid involving no radical change in the structure of the solid. The solid can be a natural zeolite or a synthetic resin, also called polyelectrolyte. Cation

exchange resins exchange their hydrogen ions for metal cations in the liquid. Anion exchange resins exchange their hydroxyl ions for anions such as nitrates in the liquid. When the ion-retaining capacity of the resin is exhausted, it must be regenerated. Cation resins are regenerated with acids and anion resins with bases.

Lacrimal. Tear forming fluid.

Lagoons. An oxidation pond that received sewage which is not settled or biologically treated.

LC 50. A lethal concentration for 50% of test animals. Numerically the same as TLm. A statistical estimate of the toxicant, such as pesticide concentration, in water necessary to kill 50% of the test organisms within a specified time under standardized conditions (usually 24,48 or 96 hr).

Leach. To dissolve out by the action of a percolating liquid, such as water, seeping through a sanitary landfill.

Lime. Limestone is an accumulation of organic remains consisting mostly of calcium carbonate. When burned, it yields lime which is a solid. The hydrated form of a chemical lime is calcium hydroxide.

Liquid-liquid-extraction. The process by which the constituents of a solution are separated by causing their unequal distribution between two insoluble liquids.

Maximum Day Limitation. The effluent limitation value equal to the maximum for one day and is the value to be published by the EPA in the Federal Register.

Maximum Thirty Day Limitation. The effluent limitation value for which the average of daily values for thirty consecutive days shall not exceed and is the value to be published by the EPA in the Federal Register.

Mean. The arithmetic average of the individual sample values.

Median. In a statistical array, the value having as many cases larger in value as cases smaller in value.

Median Lethal Dose (LD50). The dose lethal to 50 percent of a group of test organisms for a specified period. The dose material may be ingested or injected.

Median Tolerance Limit (TLm). In toxicological studies, the concentration of pollutants at which 50 percent of the test animals can survive for a specified period of exposure.

Microbial. Of or pertaining to a pathogenic bacterium.

Molecular Weight. The relative weight of a molecule compared to the weight of an atom of carbon taken as exactly 12.00; the sum of the atomic weights of the atoms in a molecule.

Mollusk (mollusca). A large animal group including those forms popularly called shellfish (but not including crustaceans). All have a soft unsegmented body protected in most instances by a calcareous shell. Examples are snails, mussels, clams, and oysters.

Mycelium. The mass of filaments which constitutes the vegetative body of fungi.

Navigable Waters. Includes all navigable waters of the United States; tributaries of navigable waters; interstate waters; intrastate lakes, rivers and streams which are utilized by interstate travellers for recreational or other purposes; intrastate lakes, rivers and streams from which fish or shellfish are taken and sold in interstate commerce; and intrastate lakes, rivers and streams which are utilized for industrial purposes by industries in interstate commerce.

Neutralization. The restoration of the hydrogen or hydroxyl ion balance in a solution so that the ionic concentration of each are equal. Conventionally, the notation "pH" (puissance d'hydrogen) is used to describe the hydrogen ion concentration or activity present in a given solution. For dilute solutions of strong acids, i.e., acids which are considered to be completely dissociate (ionized in solution), activity equals concentration.

New Source. Any facility from which there is or may be a discharge of pollutants, the construction of which is commenced after the publication of proposed regulations prescribing a standard of performance under section 306 of the Act.

Nitrate. Salt of nitric acid, e.g., sodium nitrate, $NaNO_3$.

Nitrate Nitrogen. The final decomposition product of the organic nitrogen compounds. Determination of this parameter indicates the degree of waste treatment.

Nitrification. Bacterial mediated oxidation of ammonia to nitrite. Nitrite can be further oxidized to nitrate. These reactions are brought about by only a few specialized bacterial species. Nitrosomonias sp. and Nitrococcus sp. oxidize ammonia to nitrite which is oxidized to nitrate by Nitrobacter sp.

Nitrifiers. Bacteria which causes the oxidation of ammonia to nitrites and nitrates.

Nitrite Nitrogen. An intermediate stage in the decomposition of organic nitrogen to the nitrate form. Tests for nitrite nitrogen can determine whether the applied treatment is sufficient.

Nitrobacteria. Those bacteria (an autotrophic genus) that oxidize nitrite nitrogen to nitrate nitrogen.

Nitrogen Cycle. Organic nitrogen in waste is oxidized by bacteria into ammonia. If oxygen is present, ammonia is bacterially oxidized first into nitrite and then into nitrate. If oxygen is not present, nitrite and nitrate are bacterially reduced to nitrogen gas. The second step is called "denitrification."

Nitrogen Fixation. Biological nitrogen fixation is carried on by a selected group of bacteria which take up atmospheric nitrogen and convert it to amine groups or for amino acid synthesis.

Nitrosomonas. Bacteria which oxidize ammonia nitrogen into nitrite nitrogen; an aerobic autotrophic life form.

Non-contact Cooling Water. Water used for cooling that does not come into direct contact with any raw material, intermediate product, waste product or finished product.

Non-contact Process Wastewaters. Wastewaters generated by a manufacturing process which have not come in direct contact with the reactants used in the process. These include such streams as non-contact cooling water, cooling tower blowdown, boiler blowdown, etc.

Nonputrescible. Incapable of organic decomposition or decay.

Normal Solution. A solution that contains 1 gm molecular weight of the dissolved substance divided by the hydrogen equivalent of the substance (that is, one gram equivalent) per liter of solution. Thus, a one normal solution of

sulfuric acid (H_2SO_4, mol. wt. 98) contains (98/2) 49gms of H_2SO_4 per liter.

NPDES. National Pollution Discharge Elimination System. A federal program requiring manufacturers to obtain permits to discharge plant effluents to the nation's water courses.

NSPS. New Source Performance Standards. See BADCT.

Nutrient. Any substance assimilated by an organism which promotes growth and replacement of cellular constituents.

Operations and Maintenance. Costs required to operate and maintain pollution abatement equipment including labor, material, insurance, taxes, solid waste disposal, etc.

Organic Loading. In the activated sludge process, the food to micoorganisms (F/M) ratio defined as the amount of biodegradable material available to a given amount of microorganisms per unit of time.

Oxidation. A process in which an atom or group of atoms loses electrons; the combination of a substance with oxygen, accompanied with the release of energy. The oxidized atom usually becomes a positive ion while the oxidizing agent becomes a negative ion in (chlorination for example).

Oxidation Pond. A man-made lake or body of water in which wastes are consumed by bacteria. It receives an influent which has gone through primary treatment while a lagoon receives raw untreated sewage.

Oxidation Reduction (OR). A class of chemical reactions in which one of the reacting species gives up electrons (oxidation) while another species in the reaction accepts electrons (reduction). At one time, the term oxidation was restricted to reactions involving hydrogen. Current chemical technology has broadened the scope of these terms to include all reactions where electrons are given up and taken on by reacting species; in fact, the donating and accepting of electrons must take place simultaneously.

Oxidation Reduction Potential (ORP). A measurement that indicates the activity ratio of the oxidizing and reducing species present.

Oxygen, Available. The quantity of atmospheric oxygen dissolved in the water of a stream; the quantity of dissolved oxygen available for the oxidation of organic matter in sewage.

Oxygen, Dissolved. The oxygen (usually designated as DO) dissolved in sewage, water or another liquid and usually expressed in parts per million or percent of saturation.

Ozonation. A water or wastewater treatment process involving the use of ozone as an oxidation agent.

Ozone. That molecular oxygen with three atoms of oxygen forming each molecule. The third atom of oxygen in each molecule of ozone is loosely bound and easily released. Ozone is used sometimes for the disinfection of water but more frequently for the oxidation of taste-producing substances, such as phenol, in water and for the neutralization of odors in gases or air.

Parts Per Million (ppm). Parts by weight in sewage analysis; ppm by weight is equal to milligrams per liter divided by the specific gravity. It should be noted that in water analysis ppm is always understood to imply a weight/weight ratio, even though in practice a volume may be measured instead of a weight.

Pathogenic. Disease producing.

Payloader. A large piece of heavy equipment used for transporting large volumes at a time.

Percolation. The movement of water beneath the ground surface both vertically and horizontally, but above the groundwater table.

Permeability. The ability of a substance (soil) to allow appreciable movement of water through it when saturated and actuated by a hydrostatic pressure.

pH. The negative logarithm of the hydrogen ion concentration or activity in a solution. The number 7 indicates neutrality, numbers less than 7 indicate increasing acidity, and numbers greater than 7 indicate increasing alkalinity.

Phenol. Class of cyclic organic derivatives with the basic chemical formula C_6H_5OH.

Phosphate. Phosphate ions exist as an ester or salt of phosphoric acid, such as calcium phosphate rock. In municipal wastewater, it is most frequently present as orthophosphate.

Phosphorus Precipitation. The addition of the multivalent metallic ions of calcium, iron and aluminum to wastewater to form insoluble precipitates with phosphorus.

Photosynthesis. The mechanism by which chlorophyll-bearing plant utilize light energy to produce carbohydrate and oxygen from carbon dioxide and water (the reverse of respiration).

Physical/Chemical Treatment System. A system that utilizes physical (i.e., sedimentation, filtration, centrifugation, activated carbon, reverse osmosis, etc.) and/or chemical means (i.e., coagulation, oxidation, precipitation, etc.) to treat wastewaters.

Phytoplankton. (1) Collective term for the plants and plantlike organisms present in plankton; contrasts with zooplankton.

Plankton. Collective term for the passively flating or drifting flora and fauna of a body of water; consists largely of microscopic organisms.

Point Source. Any discernible, confined and discrete conveyance, including but not limited to any pipe, ditch, channel, tunnel, conduit, well, discrete fissure, container, rolling stock, concentrated animal feeding operation, or vessel or other floating craft, from which pollutants are or may be discharged.

Pollutional Load. A measure of the strength of a wastewater in terms of its solids or oxygen-demanding characteristics or other objectionable physical and chemical characteristics or both or in terms of harm done to receiving waters. The pollutional load imposed on sewage treatment works is expressed as equivalent population.

Polyelectrolytes. Synthetic chemicals (polymers) used to speed up the removal of solids from sewage. These chemicals cause solids to coagulate or clump together more rapidly than do chemicals such as alum or lime. They can be anionic (-charge), nonionic (+ and -charge) or cationic (+charge--the most popular). They are linear or branched organic polymers. They have high molecular weights and are water-soluble. Compounds similar to the polyelectrolyte flocculants include surface-active agents and ion exchange resins. The former are low molecular weight, water soluble compounds used to disperse solids in aqueous systems. The latter are high molecular weight, water-insoluble compounds

used to selectively replace certain ions already present in water with more desirable or less noxious ions.

Population Equivalent (PE). An expression of the relative strength of a waste (usually industrial) in terms of its equivalent in domestic waste, expressed as the population that would produce the equivalent domestic waste. A population equivalent of 160 million persons means the pollutional effect equivalent to raw sewage from 160 million persons; 0.17 pounds BOD (the oxygen demand of untreated wastes from one person) = 1 PE.

Potable Water. Drinking water sufficiently pure for human use.

Potash. Potassium compounds used in agriculture and other manufacturing segments. Potassium carbonate can be obtained from wood ashes. The mineral potash is usually a muriate. Caustic potash is its hydrated form.

Preaeration . A preparatory treatment of sewage consisting of aeration to remove gases and add oxygen or to promote the flotation of grease and aid coagulation.

Precipitation. The phenomenon which occurs when a substance held in solution passes out of that solution into solid form. The adjustment of pH can reduce solubility and cause precipitation. Alum and lime are frequently used chemicals in such operations as water softening or alkalinity reduction.

Pretreatment. Any wastewater treatment process used to partially reduce the pollution load before the wastewater is introduced into a main sewer system or delivered to a treatment plant for substantial reduction of the pollution load.

Primary Clarifier. The settling tank into which the wastewater (sewage) first enters and from which the solids are removed as raw sludge.

Primary Sludge. Sludge from primary clarifiers.

Primary Treatment. The removal of material that floats or will settle in sewage by using screens to catch the floating objects and tanks for the heavy matter to settle in. The first major treatment and sometimes the only treatment in a waste-treatment works, usually sedimentation and/or flocculation and digestion. The removal of a moderate percentage of suspended matter but little or no colloidal or

dissolved matter. May effect the removal of 30 to 35 percent or more BOD.

Process Wastewater. Any water which, during manufacturing or processing, comes into direct contact with or results from the production or use of any raw material, intermediate product, finished product, by-product, or waste product.

Process Water. Any water (solid, liquid or vapor) which, during the manufacturing process, comes into direct contact with any raw material, intermediate product, by-product, waste product, or finished product.

Putrefaction. Biological decomposition of organic matter accompanied by the production of foul-smelling products associated with anaerobic conditions.

Pyrolysis. The high temperature decomposition of complex molecules that occurs in the presence of an inert atmosphere (no oxygen present to support combustion).

Quench. A liquid used for cooling purposes.

Quiesance. Quiet, still, inactive.

Raw Waste Load (RWL). The quantity (kg) of pollutant being discharged in a plant's wastewater. measured in terms of some common denominator (i.e., kkg of production or m^2 of floor area).

Receiving Waters. Rivers, lakes, oceans or other courses that receive treated or untreated wastewaters.

Recirculation. The refiltration of either all or a portion of the effluent in a high-rate trickling filter for the purpose of maintaining a uniform high rate through the filter. (2) The return of effluent to the incoming flow.

Reduction. A process in which an atom (or group of atoms) gain electrons. Such a process always requires the input of energy.

Refractory Organics. Organic materials that are only partially degraded or entirely nonbiodegradable in biological waste treatment processes. Refractory organics include detergents, pesticides, color- and odor-causing agents, tannins, lignins, ethers, olefins, alcohols, amines, aldehydes, ketones, etc.

Residual Chlorine. The amount of chlorine left in the treated water that is available to oxidize contaminants if they enter the stream. It is usually in the form of hypochlorous acid of hypochlorite ion or of one of the chloramines. Hypochlorite concentration alone is called "free chlorine residual" while together with the chloramine concentration their sum is called "combined chlorine residual."

Respiration. Biological oxidation within a life form; the most likely energy source for animals (the reverse of photosynthesis).

Retention Time. Volume of the vessel divided by the flow rate through the vessel.

Retort. A vessel, commonly a glass bulb with a long neck bent downward, used for distilling or decomposing substances by heat.

Salt. A compound made up of the positive ion of a base and the negative ion of an acid.

Sanitary Landfill. A sanitary landfill is a land disposal site employing an engineered method of disposing of solid wastes on land in a manner that minimizes environmental hazards by spreading the wastes in thin layers, compacting the solid wastes to the smallest practical volume, and applying cover material at the end of each operating day. There are two basic sanitary landfill methods; trench fill and area or ramp fill. The method chosen is dependent on many factors such as drainage and type of soil at the proposed landfill site.

Sanitary Sewers. In a separate system, pipes in a city that carry only domestic wastewater. The storm water runoff is handled by a separate system of pipes.

Screening. The removal of relatively coarse, floating and suspended solids by straining through racks or screens.

Secondary Treatment. The second step in most waste treatment systems in which bacteria consume the organic part of the wastes. This is accomplished by bringing the sewage and bacteria together either in trickling filters or in the activated sludge process.

Sedimentation, Final. The settling of partly settled, flocculated or oxidized sewage in a final tank. (The term settling is preferred).

Sedimentation, Plain. The sedimentation of suspended matter in a liquid unaided by chemicals or other special means and without any provision for the decomposition of the deposited solids in contact with the sewage. (The term plain settling is preferred).

Seed. To introduce microorganisms into a culture medium.

Settleable Solids. Suspended solids which will settle out of a liquid waste in a given period of time.

Settling Velocity. The terminal rate of fall of a particle through a fluid as induced by gravity or other external forces.

Sewage, Raw. Untreated sewage.

Sewage, Storm. The liquid flowing in sewers during or following a period of heavy rainfall and resulting therefrom.

Sewerage. A comprehensive term which includes facilities for collecting, pumping, treating, and disposing of sewage; the sewerage system and the sewage treatment works.

Silt. Particles with a size distribution of 0.05mm-0.002mm (2.0mm). Silt is high in quartz and feldspar.

Skimming. Removing floating solids (scum).

Sludge, Activated. Sludge floc produced in raw or settled sewage by the growth of zoogleal bacteria and other organisms in the presence of dissolved oxygen and accumulated in sufficient concentration by returning the floc previously formed.

Sludge, Age. The ratio of the weight of volatile solids in the digester to the weight of volatile solids added per day. There is a maximum sludge age beyond which no significant reduction in the concentration of volatile solids will occur.

Sludge, Digested. Sludge digested under anaerobic conditions until the volatile content has been reduced, usually by approximately 50 percent or more.

Solution. A homogeneous mixture of two or more substances of dissimilar molecular structure. In a solution, there is a dissolving medium-solvent and a dissolved substance-solute.

Solvent. A liquid which reacts with a material, bringing it into solution.

Solvent Extraction. A mixture of two components is treated by a solvent that preferentially dissolves one or more of the components in the mixture. The solvent in the extract leaving the extractor is usually recovered and reused.

Sparger. An air diffuser designed to give large bubbles, used singly or in combination with mechanical aeration devices.

Sparging. Heating a liquid by means of live steam entering through a perforated or nozzled pipe (used, for example, to coagulate blood solids in meat processing).

Standard Deviation. The square root of the variance which describes the variability within the sampling data on the basis of the deviation of individual sample values from the mean.

Standard Raw Waste Load (SRWL). The raw waste load which characterizes a specific subcategory. This is generally computed by averaging the plant raw waste loads within a subcategory.

Steam Distillation. Fractionation in which steam introduced as one of the vapors or in which steam is injected to provide the heat of the system.

Sterilization. The complete destuction of all living organisms in or on a medium; heat to 121°C at 5 psig for 15 minutes.

Stillwell. A pipe, chamber, or compartment with comparatively small inlet or inlets communicating with a main body of water. Its purpose is to dampen waves or surges while permitting the water level within the well to rise and fall with the major fluctuations of the main body of water. It is used with water-measuring devices to improve accuracy of measurement.

Stoichiometric. Characterized by being a proportion of substances exactly right for a specific chemical reaction with no excess of any reactant or product.

Stripper. A device in which relatively volatile components are removed from a mixture by distillation or by passage of steam through the mixture.

Substrate. (1) Reactant portion of any biochemical reaction, material transformed into a product. (2) Any substance used as a nutrient by a microorganism. (3) The liquor in which activated sludge or other material is kept in suspension.

Sulfate. The final decomposition product of organic sulfur compounds.

Supernatant. Floating above or on the surface.

Surge tank. A tank for absorbing and dampening the wavelike motion of a volume of liquid; an in-plant storage tank that acts as a flow buffer between process tanks.

Suspended Solids. The wastes that will not sink or settle in sewage. The quantity of material deposited on a filter when a liquid is drawn through a Gooch crucible.

Synergistic. An effect which is more than the sum of the individual contributors.

Synergistic Effect. The simultaneous action of separate agents which, together, have greater total effect than the sum of their individual effects.

Tertiary Treatment. A process to remove practically all solids and organic matter from wastewater. Granular activated carbon filtration is a tertiary treatment process. Phosphate removal by chemical coagulation is also regarded as a step in tertiary treatment.

Thermal Oxidation. The wet combustion of organic materials through the application of heat in the presence of oxygen.

TKN (Total Kjeldahl Nitrogen). Includes ammonia and organic nitrogen but does not include nitrite and nitrate nitrogen. The sum of free nitrogen and organic nitrogen in a sample.

TLm. The concentration that kills 50% of the test organisms within a specified time span, usually in 96 hours or less. Most of the available toxicity data are reported as the median tolerance limit (TLm). This system of reporting has been misapplied by some who have erroneously inferred that a TLm value is a safe value, whereas it is merely the level at which half of the test organisms are killed. In many cases, the differences are great between TLm concentrations and concentrations that are low enough to permit reproduction and growth. LC50 has the same numerical value as TLm.

Total Organic Carbon (TOC). A measure of the amount of carbon in a sample originating from organic matter only. The test is run by burning the sample and measuring the carbon dioxide produced.

Total Solids. The total amount of solids in a wastewater both in solution and suspension.

Total Volatile Solids (TVS). The quantity of residue lost after the ignition of total solids.

Transport Water. Water used to carry insoluble solids.

Trickling Filter. A bed of rocks or stones. The sewage is trickled over the bed so that bacteria can break down the organic wastes. The bacteria collect on the stones through repeated use of the filter.

Turbidity. A measure of the amount of solids in suspension. The units of measurement are parts per million (ppm) of suspended solids or Jackson Candle Units. The Jackson Candle Unit (JCU) is defined as the turbidity resulting from 1 ppm of fuller's earth (and inert mineral) suspended in water. The relationship between ppm and JCU depends on particle size, color, index of refraction; the correlation between the two is generally not possible. Turbidity instruments utilize a light beam projected into the sample fluid to effect a measurement. The light beam is scattered by solids in suspension, and the degree of light attenuation or the amount of scattered light can be related to turbidity. The light scattered is called the Tyndall effect and the scattered light the Tyndall light. An expression of the optical property of a sample which causes light to be scattered and absorbed rather than transmitted in straight lines through the sample.

Viruses. (1) An obligate intracellular parasitic microorganism smaller than bacteria. Most can pass through filters that retain bacteria. (2) The smallest (10-300 um in diameter) form capable of producing infection and diseases in man or other large species. Occurring in a variety of shapes, viruses consist of a nucleic acid core surrounded by an outer shell (capsid) which consists of numerous protein subunits (capsomeres). Some of the larger viruses contain additional chemical substances. The true viruses are insensitive to antibiotics. They multiply only in living cells where they are assembled as complex macromolecules utilizing the cells' biochemical systems. They do not multiply by division as do intracellular bacteria.

Volatile Suspended Solids (VSS). The quantity of suspended solids lost after the ignition of total suspended solids.

Waste Treatment Plant. A series of tanks, screens, filters, pumps and other equipment by which pollutants are removed from water.

Water Quality Criteria. Those specific values of water quality associated with an identified beneficial use of the water under consideration.

Weir. A flow measuring device consisting of a barrier across an open channel, causing the liquid to flow over its crest. The height of the liquid above the crest varies with the volume of liquid flow.

Wet Air Pollution Control. The technique of air pollution abatement utilizing water as an absorptive media.

Wet Oxidation. The direct oxidation of organic matter in wastewater liquids in the presence of air under heat and pressure; generally applied to organic matter oxidation in sludge.

Zeolite. Various natural or synthesized silicates used in water softening and as absorbents.

Zooplankton. (1) The animal portion of the plankton. (2) Collective term for the nonphotosynthetic organisms present in plankton; contrasts with phytoplankton.

SECTION XVII

ABBREVIATIONS AND SYMBOLS

A.C.	activated carbon
ac.ft.	acre foot
Ag.	Silver
atm	atmosphere
ave	average
bbl	barrel
BOD_5	biochemical oxygen demand, five day
Btu	British thermal unit
C	centigrade degrees
C.A.	carbon adsorption
cal.	calorie
cc	cubic centimeter
cfm	cubic foot per minute
cfs	cubic foot per second
Cl.	chloride
cm	centimeter
CN	cyanide
COD	chemical oxygen demand
conc.	concentration
cu	cubic
db	decibels
deg	degree
DO	dissolved oxygen
E. Coli	Escherichia coliform bacteria
Eq.	equation
F	Fahrenheit degrees
Fig.	figure
F/M	BOD_5 (Wastewater flow) / MLSS (contractor volume)
fpm	foot per minute
fps	foot per second
ft	foot
g	gram
gal	gallon
gpd	gallon per day
gpm	gallon per minute
Hg	Mercury
hp	horsepower
hp-hr	horsepower-hour
hr	hour
in	inch
kg	kilogram
kw	kilowatt
kwhr	kilowatthour
L(l)	liter
L/kkg	liters per 1000 kilograms
lb	pound

m	meter
M	thousand
MM	million
me	milliequivalent
mg	milligram
mgd	million gallons daily
min	minute
ml	milliliter
MLSS	mixed-liquor suspended solids
MSVSS	mixed-liquor volatile suspended solids
mm	millimeter
mole	gram-molecular weight
mph	mile per hour
MPN	most probable number
mu	millimicron
NO_3	nitrate
NH_3-N	ammonium nitrogen
O_2	oxygen
PO_4	phosphate
p.	page
pH	potential hydrogen or hydrogen-ion index (negative logrithm of the hydrogen-ion concentration)
pp.	pages
ppb	parts per billion
ppm	parts per million
psf	pound per square foot
psi	pound per square inch
R.O.	reverse osmosis
rpm	revolution per minute
RWL	raw waste load
sec	second
Sec.	Section
S.I.C.	Standard Industrial Classification
SO_x	sulfates
sq	square
sq.ft.	square foot
SS	suspended solids
STP	standard temperature and pressure
SRWL	standard raw waste load
TDS	total dissolved solids
TKN	total kjeldahl nitrogen
TLm	median tolerance limit
TOC	total organic carbon
TOD	total oxygen demand
TSS	total suspended solids
u	micron
ug	microgram
vol	volume
wt	weight
yd	yard

TABLE XVIII

METRIC TABLE

CONVERSION TABLE

JLTIPLY (ENGLISH UNITS)		by	TO OBTAIN (METRIC UNITS)	
ENGLISH UNIT	ABBREVIATION	CONVERSION	ABBREVIATION	METRIC UNIT
cre	ac	0.405	ha	hectares
cre-feet	ac ft	1233.5	cu m	cubic meters
ritish Thermal Unit	BTU	0.252	kg cal	kilogram-calories
ritish Thermal Unit/Pound	BTU/lb	0.555	kg cal/kg	kilogram calories/kilogram
ubic feet/minute	cfm	0.028	cu m/min	cubic meters/minute
ubic feet/second	cfs	1.7	cu m/min	cubic meters/minute
ubic feet	cu ft	0.028	cu m	cubic meters
ubic feet	cu ft	28.32	l	liters
ubic inches	cu in	16.39	cu cm	cubic centimeters
legree Fahrenheit	°F	0.555 (°F-32)*	°C	degree Centigrade
eet	ft	0.3048	m	meters
allon	gal	3.785	l	liters
allon/minute	gpm	0.0631	l/sec	liters/second
orsepower	hp	0.7457	kw	killowatts
nches	in	2.54	cm	centimeters
nches of mercury	in Hg	0.03342	atm	atmospheres
ounds	lb	0.454	kg	kilograms
illion gallons/day	mgd	3,785	cu m/day	cubic meters/day
ile	mi	1.609	km	kilometer
ound/square inch (gauge)	psig	(0.06805 psig +1)*	atm	atmospheres (absolute)
quare feet	sq ft	0.0929	sq m	square meters
quare inches	sq in	6.452	sq cm	square centimeters
on (short)	ton	0.907	kkg	metric ton (1000 kilograms)
ard	yd	0.9144	m	meter

*Actual conversion, not a multiplier

Environmental Protection Agency
Region V, Library
230 South Dearborn Street
Chicago, Illinois 60604