United States
Environmental Protection
Agency

Solid Waste And
Emergency Response
5401G

EPA 510-B-00-008
August 2000
www.epa.gov

EPA

Operating And Maintaining Underground Storage Tank Systems

Practical Help And Checklists

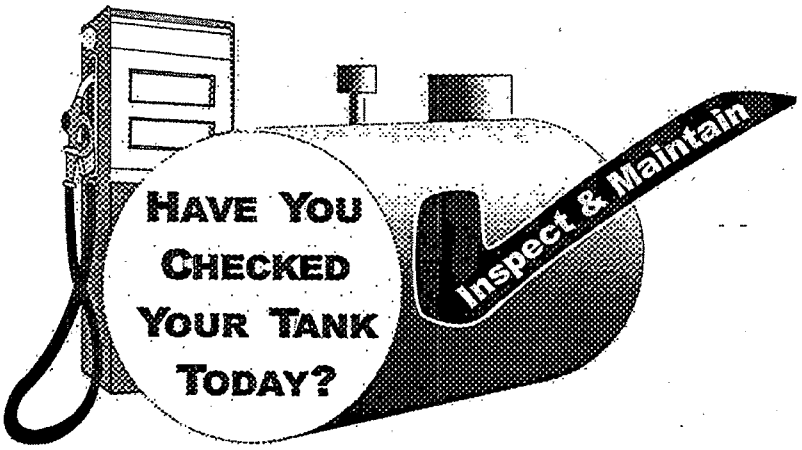

Printed on Recycled Paper

Contents

How to Use This Booklet 1

Section 1 — Identifying The Equipment At Your UST Facility . . . 3

Section 2 — Release Detection 5

Section 3 — Suspected Or Confirmed Releases 21

Section 4 — Spill And Overfill Protection 24

Section 5 — Corrosion Protection 34

Section 6 — Frequent Walk-Through Inspections 42

Section 7 — For More Information 44

DISCLAIMER

This document provides information on operating and maintaining underground storage tank (UST) systems. The document is not a substitute for U.S. Environmental Protection Agency regulations nor is it a regulation itself — it does not impose legally binding requirements.

For regulatory requirements regarding UST systems, refer to the Federal regulations governing UST systems (40 CFR Part 280).

How To Use This Booklet

Who should read this booklet?

This booklet is for owners and operators of underground storage tank systems (USTs).

You are responsible for making sure your USTs do not leak. This booklet can help you meet your UST responsibilities.

What can this booklet help you do?

- Identify and understand the operation and maintenance (O&M) procedures you need to follow routinely to make sure your USTs don't have leaks that damage the environment or endanger human health.
- Identify good O&M procedures you can use to avoid cleanup costs and liability concerns.
- Maintain useful records of your O&M.

Key Terms Used In This Booklet

An **UST** is an **underground storage tank and underground piping connected to the tank** that has at least 10 percent of its combined volume underground. The federal regulations apply only to USTs storing petroleum or certain hazardous substances.

O&M stands for **operation and maintenance procedures** that must be followed to keep USTs from causing leaks and creating costly cleanups.

Your UST system is "new" or "upgraded" — is that enough?

Being "new" or "upgraded" is not enough. New and upgraded USTs are made of a complex collection of mechanical and electronic devices that can fail under certain conditions. These failures can be prevented or quickly detected by following routine O&M procedures. Having a new or upgraded UST system is a good start, but the system must be properly operated and continuously maintained to ensure that leaks are avoided or quickly detected.

What should you do with each section of this booklet?

Read through each section carefully and use the checklists to help you establish clear O&M procedures.

By identifying and understanding the O&M tasks you need to perform routinely, you will ensure timely repair or replacement of components when problems are identified.

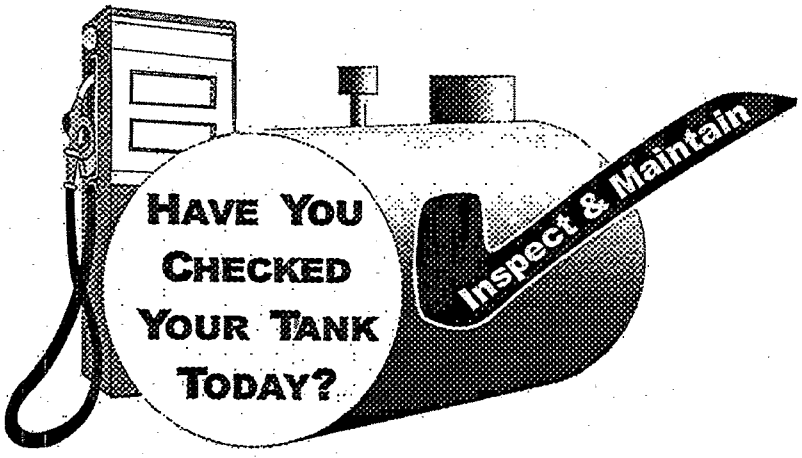

How can you use the following checklists effectively?

This booklet's pages are 3-hole punched and unbound so you can put all the materials in a handy 3-ring binder. You can easily remove any of the following checklists from the binder, reproduce them, and then fill them out.

You can select the specific mix of checklists that matches your UST facility. Once you have your select group of checklists together, make several copies that you can fill out periodically over time.

In this way you can keep track of your O&M activities and know that you've done what was necessary to keep your UST site safe and clean, avoiding any threats to the environment or nearby people as a result of costly and dangerous UST releases.

Use this booklet often — effective O&M requires constant vigilance.

Note: This booklet describes quality O&M practices put together by a work group of State and Federal environmental regulators. This booklet is not a federal regulation nor legally binding, but it does provide useful information on effective O&M procedures. You should check with your State UST program for information on any additional or different O&M practices that may be required in your State. See Section 7 for contact information.

Want to help improve this O&M Manual?

We want to continually improve this O&M Manual with your help!

Send us your feedback.

Let us know if you find any errors, think something needs to be added or deleted, or have suggestions on format or checklist changes.

- Send feedback by e-mail to OUST.outreach@epa.gov
- Send feedback by regular mail to OUST Outreach O&M, Mail Code 5401G, 1200 Pennsylvania Avenue, NW, Washington, DC 20460
- Or phone your feedback to our Hotline at 1-800-424-9346.

Section 1 — Identifying The Equipment At Your UST Facility

Determine what UST equipment you have at your facility by completing the checklist below. Note that each part of the checklist below refers you to the appropriate section of this O&M booklet for relevant information. After you have identified your equipment, proceed to the following sections to identify the O&M actions necessary for your specific UST system.

General Facility Information (optional)

Facility Name _____

Facility ID #

Release Detection (See Section 2 for information on release detection)

A. Release Detection for Tanks

Check at least one for each tank:	Tank #1	Tank #2	Tank #3	Tank #4
Automatic Tank Gauging System				
Interstitial Monitoring (with secondary containment)				
Groundwater Monitoring				
Vapor Monitoring				
Inventory Control and Tank Tightness Testing (TTT)*				
Manual Tank Gauging Only **				
Manual Tank Gauging and Tank Tightness Testing (TTT)***				
Other Release Detection Method, such as SIR (please specify)				

* Allowed only for 10 years after upgrading or installing tank with corrosion protection. TTT required every 5 years.
** Allowed only for tanks of 1,000 gallon capacity or less.
*** Allowed only for tanks of 2,000 gallon capacity or less and only for 10 years after upgrading or installing tank with corrosion protection. TTT required every 5 years.

B. Release Detection for Pressurized Piping

Check at least one from A & B for each tank's piping:		Tank #1	Tank #2	Tank #3	Tank #4
A (Automatic Line Leak Detectors)	Automatic Flow Restrictor				
	Automatic Shutoff Device				
	Continuous Alarm				
B	Annual Line Tightness Test				
	Monthly Monitoring*				

* Monthly Monitoring for piping includes Interstitial Monitoring, Vapor Monitoring, Groundwater Monitoring, and other accepted methods (such as SIR and Electronic Line Leak Detectors)

C. Release Detection for Suction Piping

Check at least one for each tank's piping:	Tank #1	Tank #2	Tank #3	Tank #4
Line Tightness Testing Every Three Years				
Monthly Monitoring*				
No Release Detection Required For "Safe Suction" **				

* Monthly Monitoring for piping includes Interstitial Monitoring, Vapor Monitoring, Groundwater Monitoring, and SIR
** No release detection required only if it can be verified that you have a "safe suction" piping system with the following characteristics:

1) Only one check valve per line located directly below the dispenser;
2) Piping sloping back to the tank; and
3) System must operate under atmospheric pressure.

Spill and Overfill Protection (See Section 4 for more information)

Check for each tank:	Tank #1	Tank #2	Tank #3	Tank #4
Spill Catchment Basin/ Spill Bucket				
Check at least one overfill device for each tank:				
Automatic Shutoff Device				
Overfill Alarm				
Ball Float Valve				

Corrosion Protection (See Section 5 for more information)

A. Corrosion Protection for Tanks

Check at least one for each tank:	Tank #1	Tank #2	Tank #3	Tank #4
Coated and Cathodically Protected Steel				
Noncorrodible Material (such as Fiberglass Reinforced Plastic)				
Steel Jacketed or Clad with Noncorrodible Material				
Cathodically Protected Noncoated Steel*				
Internally Lined Tank*				
Cathodically Protected Noncoated Steel and Internally Lined Tank*				
Other Method Used to Achieve Corrosion Protection (please specify):				

* These options may be used only for tanks installed before December 22, 1988.

B. Corrosion Protection for Piping

Check at least one for each:	Tank #1	Tank #2	Tank #3	Tank #4
Coated and Cathodically Protected Steel				
Noncorrodible Material (such as Fiberglass Reinforced Plastic or Flexible Plastic)				
Cathodically Protected Noncoated Metal*				
Other Method Used to Achieve Corrosion Protection (please specify):				

* This option may be used only for piping installed before December 22, 1988.

Any problems filling out this checklist?

If you have trouble filling out this checklist or any following checklist, remember these sources of assistance you can contact:

- Your UST contractor, the vendor of your equipment, and the manufacturer of your UST equipment should be ready to help you. Look through your records for contact information. You may also want to use some of the industry contacts and other contact information provided in Section 7.

- Your State regulatory agency may be able to help you identify equipment or sources of information about your UST equipment. You should, in any event, make yourself aware of any ways in which your State may have additional or different O&M procedures than those presented in this booklet. See Section 7 for State agency contacts.

Section 2 — Release Detection

What Is Release Detection?

You must be able to determine at least every 30 days whether or not your tank and piping are leaking by using proper release detection methods.

Your release detection method must be able to detect a release from any portion of the tank and connected underground piping that routinely contains product.

Release detection must be installed, calibrated, operated, and maintained according to the manufacturer's instructions.

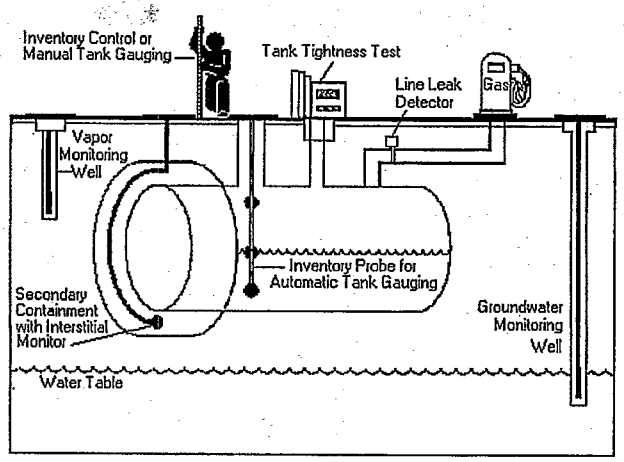

Do You Know If Your Release Detection Is "Certified" To Work At Your UST Site?

Release detection must meet specific performance requirements. You should have documentation from the manufacturer, vendor, or installer of your release detection equipment showing certification that it can meet performance requirements.

Some vendors or manufacturers supply their own certification, but more often an impartial "third party" is paid to test the release detection equipment and certify that performance requirements are met. An independent workgroup of release detection experts periodically evaluates all third-party certifications, thus providing a free and reliable list of evaluations of third-party certifications for various release detection equipment. Frequently updated, this list is available on the Internet at **http://www.epa.gov/oust/pubs/ldlist.htm** (the publication's title is ***List Of Leak Detection Evaluations For Underground Storage Tank Systems***). If you can't find the certification anywhere, contact your State regulatory agency (see Section 7 for contacts).

By checking the certification, you may discover the method you use has not been approved for use with the type of tank or piping you have or the type of product being stored. For example, you may learn from the certification that your method won't work with manifolded tanks, certain products, high throughput, or with certain tank sizes.

That's why you need to make sure your release detection method has clear certification that it will work effectively at your site with its specific characteristics.

How Can You Make Sure Your Leak Detection Method Is Working At Your UST Site?

If you don't understand your O&M responsibilities and don't know what O&M tasks you must routinely perform, you may allow your UST site to become contaminated — then you will face cleanup costs and associated problems.

To avoid these problems use the checklists on the following pages that describe each type of leak detection method, discuss actions necessary for proper O&M, and note the records you should keep.

Locate the methods of release detection you are using at your facility, review these pages, and periodically complete the checklist. You might want to copy a page first and periodically fill out copies later.

If you have questions about your release detection system, review your owner's manual or call the vendor of your system. Your state or local regulatory agency may be able to provide assistance as well.

You will find leak detection recordkeeping forms in the following pages of this Section. Keeping these records increases the likelihood that you are conducting good O&M and providing effective release detection at your UST site. For example, see page 20 for a "30-Day Release Detection Monitoring Record."

If you ever suspect or confirm a leak, refer to Section 3. **Never ignore leak detection alarms or failed leak detection tests. Treat them as potential leaks!**

Automatic Tank Gauging (ATG) Systems (for tanks only)	
Description Of Release Detection	**An automatic tank gauging (ATG) system consists of a probe permanently installed in a tank and wired to a monitor to provide information on product level and temperature. ATG systems automatically calculate the changes in product volume that can indicate a leaking tank.**
Have Certification For Your Release Detection Method	❑ **Make sure your ATG system is certified for the types of tanks and stored contents on which the ATG system is used.** Most manufacturers have their leak detection devices tested and certified by a third party to verify that their equipment meets specific performance requirements set by regulatory agencies. If you don't have certified performance claims, have the manufacturer provide them to you.
Perform These O&M Actions	❑ **Use your ATG system to test for leaks at least every 30 days.** Most systems are already programmed by the installer to run a leak test periodically. If your system is not programmed to automatically conduct the leak test, refer to your ATG system manual to identify which buttons to push to conduct the leak test. Testing more often than monthly can catch leaks sooner and reduce cleanup costs and problems. ❑ **Make sure that the amount of product in your tank is sufficient to run the ATG leak test.** The tank must contain a minimum amount of product to perform a valid leak detection test. One source for determining that minimum amount is the certification for your leak detection equipment (as discussed above). ❑ **Frequently test your ATG system according to the manufacturer's instructions to make sure it is working properly.** Don't assume that your release detection system is working and never needs checking. Read your owner's manual, run the appropriate tests, and see if your ATG system is set up and working properly. Most ATG systems have a "test" or "self-diagnosis" mode that can easily and routinely run these checks. ❑ **If your ATG ever fails a test or indicates a release, see Section 3 of this booklet for information on what to do next.** ❑ **Periodically have a qualified UST contractor, such as the vendor who installed your ATG, service all the ATG system components according to the manufacturer's service instructions.** Tank probes and other components can wear out and must be checked periodically. Many vendors recommend or require this maintenance activity at least annually. ❑ **Check your ATG system owner's manual often to answer questions and to make sure you know the ATG's operation and maintenance procedures.** Call the ATG manufacturer or vendor for a copy of the owner's manual if you don't have one. ❑ **Make sure employees who run, monitor, or maintain the release detection system know exactly what they have to do and to whom to report problems.** Develop and maintain regular training programs for all employees.
Keep These O&M Records	❑ **Keep results of your ATG system tests for at least 1 year.** Your monitoring equipment may provide printouts that can be used as records. Unless you are recording actual release detection results at least every 30 days and maintaining records for at least 1 year, you are not doing leak detection right. ❑ **Keep all records of calibration, maintenance, and repair of your release detection equipment for at least 1 year.** ❑ **Keep all performance claims supplied by the installer, vendor, or manufacturer for at least 5 years.** These records include the certification of your leak detection equipment described above.

Secondary Containment With Interstitial Monitoring

(for tanks & piping)

Description Of Release Detection	**Secondary containment is a barrier between the portion of an UST system that contains product and the outside environment. Examples of secondary containment include an outer tank or piping wall, an excavation liner, and a bladder inside an UST. The area between the inner and outer barriers — called the interstitial space — is monitored manually or automatically for evidence of a leak.**
Have Certification For Your Release Detection Method	❑ **Make sure your interstitial monitoring equipment and any probes are certified for the types of tanks, piping, and stored contents on which the release detection system is used.** Most manufacturers have their leak detection devices tested and certified by a third party to verify that their equipment meets specific performance requirements set by regulatory agencies. If you don't have certified performance claims, have the manufacturer provide them to you.
Perform These O&M Actions	❑ **Use your release detection system to test for leaks at least every 30 days.** Testing more often than monthly can catch leaks sooner and reduce cleanup costs and problems. ❑ **Frequently test your release detection system according to the manufacturer's instructions to make sure it is working properly.** Don't assume that your release detection system is working and never needs checking. Read your owner's manual, run the appropriate tests, and see if your system is set up and working properly. Some interstitial monitoring systems have a "test" or "self-diagnosis" mode that can easily and routinely run these checks. ❑ **If your interstitial monitoring ever fails a test or indicates a release, see Section 3 of this booklet for information on what to do next.** ❑ **Periodically have a qualified UST contractor, such as the vendor who installed your release detection system, service all the system components according to the manufacturer's service instructions.** Tank probes and other components can wear out and must be checked periodically. Many vendors recommend or require this maintenance activity at least annually. ❑ **Keep interstitial monitoring access ports clearly marked and secured.** ❑ **Check your interstitial monitoring system owner's manual often to answer questions and to make sure you know the system's O&M procedures.** Call the system's vendor or manufacturer for a copy of the owner's manual if you don't have one. ❑ **Make sure employees who run, monitor, or maintain the release detection system know exactly what they have to do and to whom to report problems.** Develop and maintain regular training programs for all employees.
Keep These O&M Records	❑ **Keep results of your release detection system tests for at least 1 year.** Your monitoring equipment may provide printouts that can be used as records. Unless you are recording actual release detection results at least every 30 days and maintaining records for at least 1 year, you are not doing leak detection right. ❑ **Keep all records of calibration, maintenance, and repair of your release detection equipment for at least 1 year.** ❑ **Keep all performance claims supplied by the installer, vendor, or manufacturer for at least 5 years.** These records include the certification of your leak detection equipment described above.

Statistical Inventory Reconciliation (SIR) (for tanks & piping)

Description Of Release Detection	**SIR is a method in which a trained professional uses sophisticated computer software to conduct a statistical analysis of inventory, delivery, and dispensing data. You must supply the professional with data every month. The result of the analysis may be PASS, INCONCLUSIVE, or FAIL.**
Have Certification For Your Release Detection Method	❑ **Make sure your SIR vendor's methodology is certified for the types of tanks, piping, and product on which you use SIR.** Most vendors have their leak detection devices tested and certified by a third party to verify that their equipment meets specific performance requirements set by regulatory agencies. If you don't have certified performance claims, have the vendor provide them to you.
Perform These O&M Actions	❑ **Supply daily inventory data to your SIR vendor at least every 30 days.** The vendor will provide you with your leak detection results after the statistical analysis is completed. ❑ **See Section 3 of this manual if your UST system fails a leak test.** ❑ **If you receive an "inconclusive" result, you must work with your SIR vendor to correct the problem and document the results of the investigation.** An inconclusive result means that you have not performed leak detection for that month. If you cannot resolve the problem, treat the inconclusive result as a suspected release and refer to Section 3. ❑ **If you use an ATG system to gather data for the SIR vendor, periodically have a qualified UST contractor, such as the vendor who installed your ATG, service all the ATG system components according to the manufacturer's service instructions.** Tank probes and other components can wear out and must be checked periodically. Many vendors recommend or require this maintenance activity at least annually. Do this according to manufacturer's instructions. See the checklist for ATG systems on page 7. ❑ **If you stick your tank to gather data for the SIR vendor, make sure your stick can measure to one-eighth of an inch and can measure the level of product over the full range of the tank's height.** You should check your measuring stick periodically to make sure that you can read the markings and numbers and that the bottom of the stick is not worn. ❑ **Make sure employees who run, monitor, or maintain the release detection system know exactly what they have to do and to whom to report problems.** Develop and maintain regular training programs for all employees.
Keep These O&M Records	❑ **Keep results of your SIR tests for at least 1 year.** Unless you are keeping records of the 30-day release detection results and maintaining those records for at least 1 year, you are not doing leak detection right. ❑ **Keep all vendor performance claims for at least 5 years.** This includes the certification of the SIR method discussed above. ❑ **If you use an ATG system, keep all records of calibration, maintenance, and repair of your release detection equipment for at least 1 year.** ❑ **Keep the records of investigations conducted as a result of any monthly monitoring conclusion of "Inconclusive" or "Fail" for at least 1 year.** This may include the results of a tightness test performed during the investigation or a re-evaluation based on corrected delivery or dispenser data.

Vapor Monitoring (for tanks & piping)	
Description Of Release Detection	**Vapor monitoring measures product vapors in the soil at the UST site to check for a leak. A site assessment must determine the number and placement of monitoring wells that make sure a release is detected. NOTE: vapor monitors will not work well with substances that do not easily vaporize (such as diesel fuel).**
Have Certification For Your Release Detection Method	❑ **Make sure your vapor monitoring equipment is certified for the types of stored contents on which the release detection system is used.** Most manufacturers have their leak detection devices tested and certified by a third party to verify that their equipment meets specific performance requirements set by regulatory agencies. If you don't have certified performance claims, have the manufacturer provide them to you.
Perform These O&M Actions	❑ **Use your release detection system to test for leaks at least every 30 days.** Testing more often than monthly can catch leaks sooner and reduce cleanup costs and problems. **Be sure you check all of your vapor monitoring wells.** ❑ **See Section 3 of this manual if your UST system fails a leak test.** ❑ **Frequently test your release detection system according to the manufacturer's instructions to make sure it is working properly.** Don't assume that your release detection system is working and never needs checking. Some electronic vapor monitoring systems have a "test" or "self-diagnosis" mode. If you have components (such as monitoring equipment, probes or sensors) for your vapor monitoring system, read your manual and test your equipment to see if it is working properly. ❑ **Periodically have a qualified UST contractor, such as the vendor who installed your release detection system, service all the system components according to the manufacturer's service instructions.** Probes and other components can wear out and must be checked periodically. Many vendors recommend or require this maintenance activity at least annually. ❑ **Keep your vapor monitoring wells clearly marked and secured.** ❑ **Check your vapor monitoring system owner's manual often to answer questions and to make sure you know the system's operation and maintenance procedures.** Call the system's vendor or manufacturer for a copy of the owner's manual if you don't have one. ❑ **Make sure employees who run, monitor, or maintain the release detection system know exactly what they have to do and to whom to report problems.** Develop and maintain regular training programs for all employees.
Keep These O&M Records	❑ **Keep results of your release detection system tests for at least 1 year.** Your monitoring equipment may provide printouts that can be used as records. Unless you are recording actual release detection results at least every 30 days and maintaining records for at least 1 year, you are not doing leak detection right. ❑ **Keep all records of calibration, maintenance, and repair of your release detection equipment for at least 1 year.** ❑ **Keep all performance claims supplied by the installer, vendor, or manufacturer for at least 5 years.** These records include the certification of your leak detection equipment described above.

Groundwater Monitoring (for tanks & piping)	
Description Of Release Detection	**Groundwater monitoring looks for the presence of liquid product floating on the groundwater at the UST site. A site assessment must determine the number and placement of monitoring wells that make sure a release is detected. NOTE: this method cannot be used at sites where groundwater is more than 20 feet below the surface.**
Have Certification For Your Release Detection Method	❑ **Make sure any automated groundwater monitoring equipment is certified for the types of stored contents on which the release detection system is used.** Most manufacturers have their leak detection devices tested and certified by a third party to verify that their equipment meets specific performance requirements set by regulatory agencies. If you don't have certified performance claims, have the manufacturer provide them to you. (Manual devices such as bailers are not generally certified.)
Perform These O&M Actions	❑ **Use your release detection system to test for leaks at least every 30 days.** Testing more often than monthly can catch leaks sooner and reduce cleanup costs and problems. **Be sure you check all of your groundwater monitoring wells.** ❑ **See Section 3 of this manual if your UST system fails a leak test.** ❑ **Frequently test your automated release detection system according to the manufacturer's instructions to make sure it is working properly.** Don't assume that your release detection system is working and never needs checking. Some electronic groundwater monitoring systems have a "test" or "self-diagnosis" mode. If you have components (such as monitoring equipment, probes or sensors) for your vapor monitoring system, read your manual and test your equipment to see if it is working properly. Manual devices should be periodically checked to make sure they are working properly. ❑ **Periodically have a qualified UST contractor, such as the vendor who installed your release detection system, service all the system components according to the manufacturer's service instructions.** Probes and other components can wear out and must be checked periodically. Many vendors recommend or require this maintenance activity at least annually. ❑ **Keep your groundwater monitoring wells clearly marked and secured.** ❑ **Check your groundwater monitoring system owner's manual often to answer questions and to make sure you know the system's operation and maintenance procedures.** Call the system's vendor or manufacturer for a copy of the owner's manual if you don't have one. ❑ **Make sure employees who run, monitor, or maintain the release detection system know exactly what they have to do and to whom to report problems.** Develop and maintain regular training programs for all employees.
Keep These O&M Records	❑ **Keep results of your release detection system tests for at least 1 year.** Your monitoring equipment may provide printouts that can be used as records. Unless you are recording actual release detection results at least every 30 days and maintaining records for at least 1 year, you are not doing leak detection right. ❑ **Keep all records of calibration, maintenance, and repair of your release detection equipment for at least 1 year.** ❑ **Keep all performance claims supplied by the installer, vendor, or manufacturer for at least 5 years.** These records include the certification of your leak detection equipment described above.

Inventory Control And Tank Tightness Testing (for tanks only)

Description Of Release Detection	**This temporary method combines monthly inventory control with periodic tank tightness testing. Inventory control involves taking measurements of tank contents and recording the amount of product pumped each operating day, measuring and recording tank deliveries, and reconciling all this data at least once a month. This combined method also includes tightness testing, a sophisticated test performed by trained professionals.** ***NOTE: This combination method can only be used temporarily for up to 10 years after installing a new UST or for up to 10 years after your tank meets the corrosion protection requirements.***
Have Certification For Your Release Detection Method	❑ **Make sure your tank tightness testing is certified for the types of tanks and stored contents on which the tightness test is used.** Most tightness test methods are certified by a third party to verify that they meet specific performance requirements set by regulatory agencies. If you don't have certified performance claims, have the tightness tester provide them to you.
Perform These O&M Actions	❑ **Take inventory readings and record the numbers at least each day that product is added to or taken out of the tank.** You may want to use the "Daily Inventory Worksheet" provided for you on the next page. ❑ **Reconcile the fuel deliveries with delivery receipts by taking inventory readings before and after each delivery.** Record these readings on a "Daily Inventory Worksheet" (see next page). ❑ **Reconcile all your data at least every 30 days.** Use a "Monthly Inventory Record" (see page 14 for an example). ❑ **Have a tank tightness test conducted at least every 5 years. This testing needs to be conducted by a professional trained in performing tank tightness testing.** ❑ **See Section 3 of this manual if your tank fails a tightness test or if fails two consecutive months of inventory control.** ❑ **Ensure that your measuring stick can measure to the nearest one-eighth inch and can measure the level of product over the full range of the tank's height.** You should check your measuring stick periodically to make sure that you can read the markings and numbers and that the bottom of the stick is not worn. ❑ **Ensure that your product dispenser is calibrated according to local standards or to an accuracy of 6 cubic inches for every 5 gallons of product withdrawn.** ❑ **Measure the water in your tank to the nearest one-eighth inch at least once a month and record the results on the reconciliation sheet.** You can use a paste that changes color when it comes into contact with water. ❑ **Make sure employees who run, monitor, or maintain the release detection system know exactly what they have to do and to whom to report problems.** Develop and maintain regular training programs for all employees.
Keep These O&M Records	❑ **Keep results of your release detection system tests for at least 1 year.** Your monitoring equipment may provide printouts that can be used as records. Unless you are recording actual release detection results at least every 30 days and maintaining records for at least 1 year, you are not doing leak detection right. ❑ **Keep the results of your most recent tightness test.** ❑ **Keep all certification and performance claims for tank tightness test performed at your UST site for at least 5 years.**

DAILY INVENTORY WORKSHEET

FACILITY NAME: _____

YOUR NAME: _____

DATE: _____

TANK IDENTIFICATION					
Type of Fuel					
Tank Size in Gallons					
END STICK INCHES					
AMOUNT PUMPED	↓	↓	↓	↓	↓
Totalizer Reading					
Totalizer Reading					
Totalizer Reading					
Totalizer Reading					
Totalizer Reading					
Totalizer Reading					
Totalizer Reading					
Totalizer Reading					
TODAY'S SUM OF TOTALIZERS					
Previous Day's Sum of Totalizers					
AMOUNT PUMPED TODAY					
DELIVERY RECORD	↓	↓	↓	↓	↓
Inches of Fuel Before Delivery					
Gallons of Fuel Before Delivery (from tank chart)					
Inches of Fuel After Delivery					
Gallons of Fuel After Delivery (from tank chart)					
GALLONS DELIVERED (STICK) [Gallons "After" – Gallons "Before"]					
GROSS GALLONS DELIVERED (RECEIPT)					

MONTHLY INVENTORY RECORD

MONTH/YEAR :_____/_____

TANK IDENTIFICATION & TYPE OF FUEL:_____

FACILITY NAME:_____

DATE OF WATER CHECK: _____ LEVEL OF WATER (INCHES):_____

DATE	START STICK INVENTORY (GALLONS)	GALLONS DELIVERED	GALLONS PUMPED	BOOK INVENTORY (GALLONS)	END STICK INVENTORY (INCHES)	END STICK INVENTORY (GALLONS)	DAILY OVER (+) OR SHORT (-) ["End" - "Book"]	INITIALS
1	(+)		(-)	(=)				
2	(+)		(-)	(=)				
3	(+)		(-)	(=)				
4	(+)		(-)	(=)				
5	(+)		(-)	(=)				
6	(+)		(-)	(=)				
7	(+)		(-)	(=)				
8	(+)		(-)	(=)				
9	(+)		(-)	(=)				
7	(+)		(-)	(=)				
8	(+)		(-)	(=)				
9	(+)		(-)	(=)				
10	(+)		(-)	(=)				
11	(+)		(-)	(=)				
12	(+)		(-)	(=)				
13	(+)		(-)	(=)				
14	(+)		(-)	(=)				
15	(+)		(-)	(=)				
16	(+)		(-)	(=)				
17	(+)		(-)	(=)				
18	(+)		(-)	(=)				
19	(+)		(-)	(=)				
20	(+)		(-)	(=)				
21	(+)		(-)	(=)				
22	(+)		(-)	(=)				
23	(+)		(-)	(=)				
24	(+)		(-)	(=)				
25	(+)		(-)	(=)				
26	(+)		(-)	(=)				
27	(+)		(-)	(=)				
28	(+)		(-)	(=)				
29	(+)		(-)	(=)				
30	(+)		(-)	(=)				
31	(+)		(-)	(=)				

TOTAL GALLONS PUMPED > _____ **TOTAL GALLONS OVER OR SHORT >** _____

Compare these numbers

LEAK CHECK:
Drop the last two digits from the **TOTAL GALLONS PUMPED** number and enter here: _____ + 130 = _____ gallons

Is the "TOTAL GALLONS OVER OR SHORT" **LARGER** than "LEAK CHECK" result? **YES** **NO** (circle one)

If your answer is "YES" for 2 MONTHS IN A ROW, **notify the regulatory agency** as soon as possible.

KEEP THIS PIECE OF PAPER ON FILE FOR AT LEAST 1 YEAR

Manual Tank Gauging (for tanks 1,000 gallons or less only)	
Description Of Release Detection	**This method may be used only for tanks of 1,000 gallons or less capacity meeting certain requirements. These requirements (tank size, tank dimension, and test time) are found in the manual tank gauging record on the next page. Manual tank gauging involves taking your tank out of service for the testing period (at least 36 hours) each week, during which the contents of the tank are measured twice at the beginning and twice at the end of the test period. The measurements are then compared to weekly and monthly standards to determine if the tank is tight.**
Have Certification For Your Release Detection Method	**None required.**
Perform These O&M Actions	❑ **Once a week, record two inventory readings at the beginning of the test, allow the tank to sit undisturbed for the time specified in the "Manual Tank Gauging Record" on the next page, and record two inventory readings at the end of the test (use any form comparable to the one on the following page).** ❑ **Reconcile the numbers weekly and record them on a "Manual Tank Gauging Record" (see the next page).** ❑ **See Section 3 of this manual if your tank fails the weekly standard.** ❑ **At the end of 4 weeks, reconcile your records for the monthly standard and record the result on a "Manual Tank Gauging Record" (see the next page).** ❑ **See Section 3 of this manual if your tank fails the monthly standard.** ❑ **Ensure that your measuring stick can measure to the nearest one-eighth inch and can measure the level of product over the full range of the tank's height.** You should check your measuring stick periodically to make sure that you can read the markings and numbers and that the bottom of the stick is not worn. ❑ **Make sure employees who run, monitor, or maintain the release detection system know exactly what they have to do and to whom to report problems.** Develop and maintain regular training programs for all employees.
Keep These O&M Records	❑ **Keep your manual tank gauging records for at least 1 year.** Unless you are recording actual release detection results weekly and at least every 30 days and maintaining records for at least 1 year, you are not doing leak detection right.

MANUAL TANK GAUGING RECORD

MONTH _____ YEAR _____
TANK IDENTIFICATION: _____
PERSON COMPLETING FORM: _____
FACILITY NAME: _____

Circle your tank size, test duration, and weekly/monthly standards in the table below:

Tank Size	Minimum Duration Of Test	Weekly Standard (1 test)	Monthly Standard (4-test average)
up to 550 gallons	36 hours	10 gallons	5 gallons
551-1,000 gallons (when tank diameter is 64")	44 hours	9 gallons	4 gallons
551-1,000 gallons (when tank diameter is 48")	58 hours	12 gallons	6 gallons
551-1,000 gallons (also requires periodic tank tightness testing)	36 hours	13 gallons	7 gallons
1,001-2,000 gallons (also requires periodic tank tightness testing)	36 hours	26 gallons	13 gallons

Compare your weekly readings and the monthly average of the 4 weekly readings with the standards shown in the table on the left.

If the calculated change exceeds the weekly standard, the UST may be leaking. Also, the monthly average of the 4 weekly test results must be compared to the monthly standard in the same way.

If either the weekly or monthly standards have been exceeded, the UST may be leaking. As soon as possible, call your implementing agency to report the suspected leak and get further instructions.

Start Test (month, day, and time)	First Initial Stick Reading	Second Initial Stick Reading	Average Initial Reading	Initial Gallons (convert inches to gallons) [a]	End Test (month, day, and time)	First End Stick Reading	Second End Stick Reading	Average End Reading	End Gallons (convert inches to gallons) [b]	Change In Tank Volume In Gallons + or (—) [a—b]	Tank Passes Test (circle YES or NO)
Date: Time: AM/PM					Date: Time: AM/PM						Y N
Date: Time: AM/PM					Date: Time: AM/PM						Y N
Date: Time: AM/PM					Date: Time: AM/PM						Y N
Date: Time: AM/PM					Date: Time: AM/PM						Y N
									To see how close you are to the monthly standard, divide the sum of the 4 weekly readings by 4 and enter result here >		Y N

KEEP THIS PIECE OF PAPER ON FILE FOR AT LEAST 1 YEAR

Manual Tank Gauging And Tank Tightness Testing (for tanks 2,000 gallons or less only)	
Description Of Release Detection	**This temporary method combines manual tank gauging with periodic tank tightness testing. <u>It may be used only for tanks of 2,000 gallons or less capacity.</u> Manual tank gauging involves taking your tank out of service for the testing period (at least 36 hours) each week, during which the contents of the tank are measured twice at the beginning and twice at the end of the test period. The measurements are then compared to weekly and monthly standards to determine if the tank is tight. This combined method also includes tightness testing, a sophisticated test performed by trained professionals.** ***NOTE: This combination method can only be used temporarily for up to ten years after installing a new UST or for up to 10 years after your tank meets the corrosion protection requirements.***
Have Certification For Your Release Detection Method	❑ **Make sure your tank tightness testing is certified for the types of tanks and stored contents on which the tightness test is used.** Most tightness test methods are certified by a third party to verify that they meet specific performance requirements set by regulatory agencies. If you don't have certified performance claims, have the tightness tester provide them to you.
Perform These O&M Actions	❑ **Once a week, record two inventory readings at the beginning of the test, allow the tank to sit undisturbed for the time specified in the "Manual Tank Gauging Record" on page 16, and record two inventory readings at the end of the test (use any form comparable to the one on page 16).** ❑ **Reconcile the numbers weekly and record them on a "Manual Tank Gauging Record" (see page 16).** ❑ **See Section 3 of this manual if your tank fails the weekly standard.** ❑ **At the end of 4 weeks, reconcile your records for the monthly standard and record the result on a "Manual Tank Gauging Record" (see page 16).** ❑ **See Section 3 of this manual if your tank fails the monthly standard.** ❑ **Conduct a tank tightness test at least every 5 years.** This testing needs to be conducted by a professional trained in performing tank tightness testing. ❑ **See Section 3 of this manual if your tank fails the tightness test.** ❑ **Ensure that your measuring stick can measure to the nearest one-eighth inch and can measure the level of product over the full range of the tank's height.** You should check your measuring stick periodically to make sure that you can read the markings and numbers and that the bottom of the stick is not worn. ❑ **Make sure employees who run, monitor, or maintain the release detection system know exactly what they have to do and to whom to report problems.** Develop and maintain regular training programs for all employees.
Keep These O&M Records	❑ **Keep your manual tank gauging records for at least 1 year.** Unless you are recording actual release detection results at least weekly and every 30 days and maintaining records for at least 1 year, you are not doing leak detection right. ❑ **Keep the results of your most recent tightness test.** ❑ **Keep all certification and performance claims for tank tightness test performed at your UST site for at least 5 years.**

Automatic Line Leak Detection (for pressurized piping only)	
Description Of Release Detection	**Automatic line leak detectors (LLDs) are designed to detect a catastrophic release from pressurized piping. Automatic LLDs must be designed to detect a leak at least as small as 3 gallons per hour at a line pressure of 10 psi within 1 hour. When a leak is detected, automatic LLDs must shut off the product flow, restrict the product flow, or trigger an audible or visual alarm. NOTE: Automatic LLDs need to be installed and operated as close as possible to the tank (LLDs are designed to detect a leak and restrict flow only between the detector and the dispenser).**
Have Certification For Your Release Detection Method	❑ **Make sure your release detection equipment is certified for the types of piping and stored contents on which the release detection system is used.** Most manufacturers have their leak detection devices tested and certified by a third party to verify that their equipment meets specific performance requirements set by regulatory agencies. If you don't have certified performance claims, have the manufacturer provide them to you.
Perform These O&M Actions	❑ **Frequently test your automatic LLDs according to the manufacturer's instructions to make sure it is working properly.** Don't assume that your release detection system is working and never needs checking. Some monitoring systems have a "test" or "self-diagnosis" mode. ❑ **Periodically have a qualified UST contractor, such as the vendor who installed your release detection system, service all the system components according to the manufacturers' service instructions.** Components can wear out and must be checked periodically. Many vendors recommend or require this maintenance activity at least annually. ❑ **See Section 3 of this manual if your LLD detects a leak.** ❑ **Make sure employees who run, monitor, or maintain the release detection system know exactly what they have to do and to whom to report problems.** Develop and maintain regular training programs for all employees.
Keep These O&M Records	❑ **For at least a year, keep the annual test that demonstrates that the LLD is functioning properly.** ❑ **If used for monthly monitoring, keep results of your release detection system tests for at least 1 year.** Your monitoring equipment system may provide printouts that can be used as records. Unless you are recording actual release detection results at least every 30 days and maintaining records for at least 1 year, you are not doing leak detection right. ❑ **Keep all records of calibration, maintenance, and repair of your release detection equipment for at least 1 year.** ❑ **Keep all performance claims supplied by the installer, vendor, or manufacturer for at least 5 years.** These records include the certification of your leak detection equipment described above.

Line Tightness Testing (for piping only)	
Description Of Release Detection	**This method uses a periodic line tightness test to determine if your piping is leaking. Tightness testing can be performed by either a trained professional or by using a permanently installed electronic system (sometimes connected to an automatic tank gauging system).**
Have Certification For Your Release Detection Method	❑ **Make sure your line tightness testing or permanently installed electronic system is certified for the types of piping and stored contents on which the release detection system is used.** Most tightness test methods and release detection equipment have been tested and certified by a third party to verify that the equipment or services meet specific performance requirements set by regulatory agencies. If you don't have certified performance claims, have the tightness tester or equipment manufacturer provide them to you.
Perform These O&M Actions	❑ **If line tightness testing is used for pressurized piping, the test must be conducted at least annually.** ❑ **If line tightness testing is used for suction piping, the test must be conducted at least every three years.** "Safe suction" piping as described at the bottom of page 3 may not need release detection testing. ❑ **This tightness testing must be conducted by a professional trained in performing line tightness testing or by using a permanently installed electronic system.** ❑ **See Section 3 of this manual if your piping fails the tightness test or if the electronic system indicates a leak.** ❑ **Periodically have a qualified UST contractor, such as the vendor who installed your release detection system, service all the system components according to the manufacturers' service instructions.** Components can wear out and must be checked periodically. Many vendors recommend or require this maintenance activity at least annually. ❑ **Make sure employees who run, monitor, or maintain the release detection system know exactly what they have to do and to whom to report problems.** Develop and maintain regular training programs for all employees.
Keep These O&M Records	❑ **Keep results of your release detection system tests for at least 1 year.** Your monitoring equipment may provide printouts that can be used as records. Unless you are recording actual release detection results at least every 30 days and maintaining records for at least 1 year, you are not doing leak detection right. ❑ **If you use a permanently installed electronic system, keep all records of calibration, maintenance, and repair of your equipment for at least 1 year.** ❑ **Keep all performance claims supplied by the installer, vendor, or manufacturer for at least 5 years.** These records include the certification of your leak detection equipment described above.

30-Day Release Detection Monitoring Record

(may be used for monitoring wells, interstitial monitoring, and automatic tank gauging)

RELEASE DETECTION METHOD:_____

FACILITY NAME:_____

Date	Your Name	UST System (Tank & Piping) (Enter "N" for NO RELEASE DETECTED or "Y" for a SUSPECTED OR CONFIRMED RELEASE)			
		UST #	UST #	UST #	UST #

KEEP THIS PIECE OF PAPER AND ANY ASSOCIATED PRINTOUTS ON FILE FOR AT LEAST 1 YEAR FROM THE DATE OF THE LAST ENTRY

Section 3 — Suspected Or Confirmed Releases

You need to be fully prepared to respond to releases BEFORE they may occur. You need to know what to do when release detection methods indicate a suspected or confirmed release. Be ready to take the following steps, as appropriate.

Stop The Release

- Take immediate action to prevent the release of more product.
- Turn off the power to the dispenser and "bag" the nozzle.
- Make sure you know where your emergency shutoff switch is located.
- Empty the tank, if necessary, without further contaminating the site. You may need the assistance of your supplier or distributor.

Contain The Spill Or Overfill

Contain, absorb, and clean up any surface spills or overfills. You should keep enough absorbent material at your facility to contain a spill or overfill of petroleum products until emergency response personnel can respond to the incident. The suggested supplies include, but are not limited to, the following:

- Containment devices, such as containment booms, dikes, and pillows.
- Absorbent material, such as kitty litter, chopped corn cob, sand, and sawdust. (Be sure you properly dispose of used absorbent materials.)
- Mats or other material capable of keeping spill or overfill out of nearby storm drains.
- Spark-free flash light.
- Spark-free shovel.
- Buckets.
- Reels of "caution tape," traffic cones, and warning signs.
- Personal protective gear.

Also, identify any fire, explosion or vapor hazards and take action to neutralize these hazards.

Call For Help

Contact your local fire or emergency response authority. Make sure you have these crucial telephone numbers prominently posted where you and your employees can easily see them. See the next page for a form you can copy and post.

Report To Authorities

If you observe any of the following, contact your State's underground storage tank regulatory authority to report a suspected or confirmed release as soon as possible (within 24 hours):

- Any spill or overfill of petroleum that exceeds 25 gallons or that causes a sheen on nearby surface water. (Spills and overfills under 25 gallons that are contained and immediately cleaned up do not have to be reported. If they can't be quickly cleaned up they must be reported to your regulatory agency.)

- Any released regulated substances at the UST site or in the surrounding area — such as the presence of liquid petroleum; soil contamination; surface water or groundwater contamination; or petroleum vapors in sewer, basement, or utility lines.

- Any unusual operating conditions you observe — such as erratic behavior of the dispenser, a sudden loss of product, or an unexplained presence of water in the tank. However, you are not required to report if:

  - The system equipment is found to be defective, but not leaking, and is immediately repaired or replaced.

- Results from your release detection system indicate a suspected release. However, you are not required to report if:

  - The monitoring device is found to be defective and is immediately repaired, recalibrated, or replaced and further monitoring does not confirm the initial suspected release, or

  - In the case of inventory control, a second month of data does not confirm the initial result.

The next page contains a blank list for names and phone numbers of important contacts. Fill out this information for your facility so that you will know who to call in case of an emergency. Remove this page from the manual, copy it, fill it out, and post it in a prominent place at your facility.

Copy the next page and update it often. Make sure everyone at your UST facility is familiar with this list of contacts.

Release Reponse
Important Contact Information

	Contact Name	Phone #
State UST Agency:		
Local UST Agency:		
Fire Department:		
Ambulance:		
Police Department:		
Repair Contractor:		
Other Contacts:		

✔ Release Response Checklist

- ❑ **Stop the release:** Take immediate action to prevent the release of more product. Turn off the power to the dispenser and "bag" the nozzle. Make sure you know where your emergency shutoff switch is located. Empty the tank, if necessary, without further contaminating the site
- ❑ **Contain the spill or overfill:** Contain, absorb, and clean up any surface releases. Identify any fire, explosion or vapor hazards and take action to neutralize these hazards.
- ❑ **Call for help and to report suspected or confirmed releases:** Contact your local fire or emergency response authority. Contact your State's underground storage tank regulatory authority within 24 hours.

Section 4 — Spill And Overfill Protection

The purpose of spill and overfill protection equipment is to eliminate the potential for a release during fuel deliveries. The equipment must be in working order and used properly to provide adequate protection from spills and overfills.

Even the best spill and overfill protection equipment can become faulty over time if not properly operated and maintained.

Only one gallon of fuel leaking each week from a poorly maintained spill bucket can result in up to 195 tons of contaminated soil in a year.

Improper maintenance of the spill bucket at the UST site pictured below contributed to significant contamination of soil and groundwater.

What's The Difference?

Spill Protection:
A spill bucket is installed at the fill pipe to contain the drips and spills of fuel that can occur when the delivery hose is uncoupled from the fill pipe after delivery.

Overfill Protection:
Equipment is installed on the UST that is designed to stop product flow, reduce product flow, or alert the delivery person during delivery **before** the tank becomes full and begins releasing petroleum into the environment.

The following pages in this section focus on how you can routinely make sure your spill and overfill equipment is operating effectively.

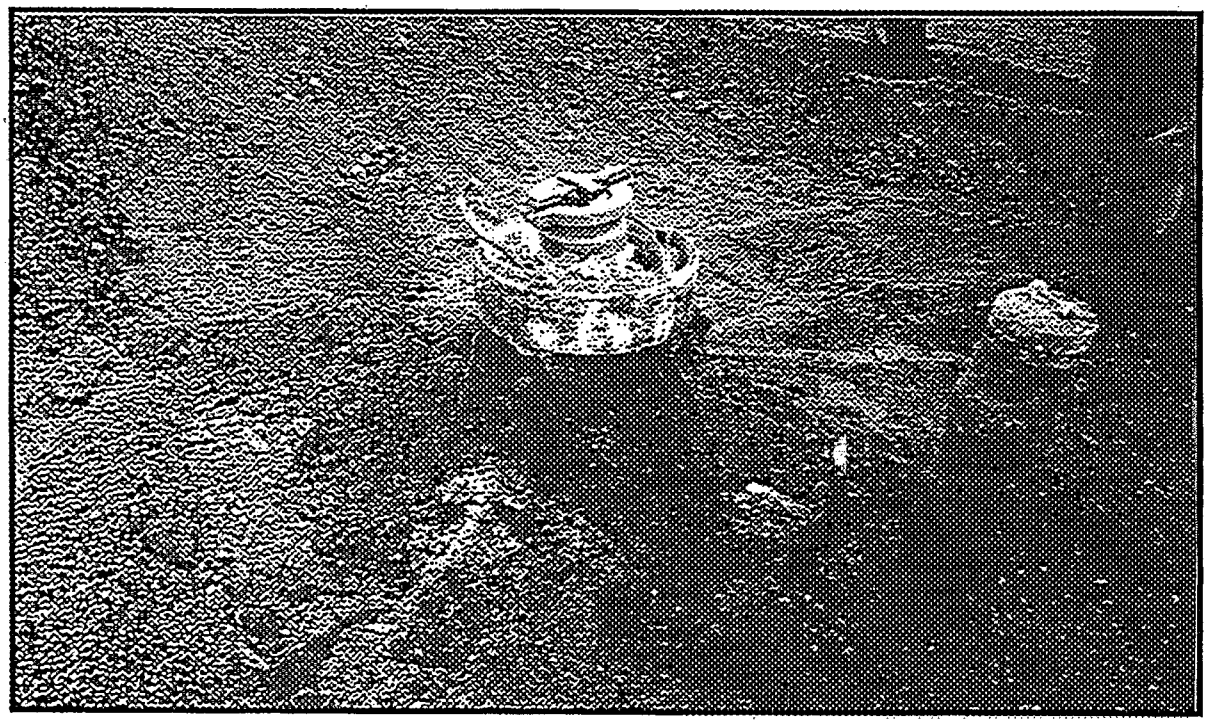

What Are The Basics Of Spill Protection?

Your USTs must have catchment basins — also called spill buckets — installed at the fill pipe to contain spills that may occur as a result of fuel deliveries.

- The spill bucket is designed to temporarily contain product spills that might occur during fuel delivery. To contain a spill, the spill bucket must be liquid tight.
- **The spill bucket is not designed to contain fuel for long periods of time** and must be quickly emptied and contents disposed of properly.
- Spill buckets need to be large enough to contain any fuel that may spill when the delivery hose is uncoupled from the fill pipe. Spill buckets typically range in size from 5 gallons to 25 gallons.
- If you use a checklist for correct filling practices (see page 33), spills should be eliminated or reduced to very small volumes that your spill bucket can easily handle.

If your UST ***never*** receives deliveries of more than 25 gallons at a time, the UST does not need to meet the spill protection requirements. Many used oil tanks fall into this category. Even though these USTs are not required to have overfill protection, you should consider using overfill protection as part of good UST system management.

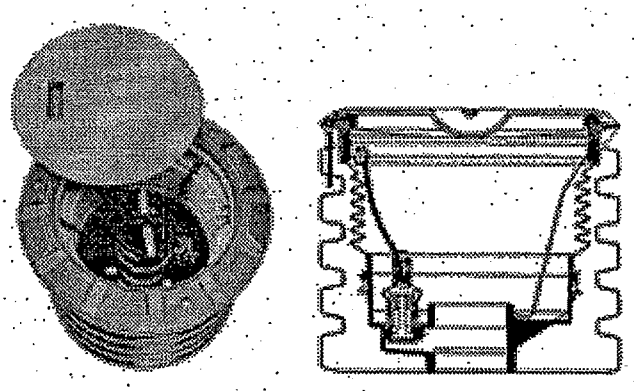

Examples of Spill Buckets

How do you maintain your spill bucket?

The checklist below provides information on properly maintaining your spill bucket.

✔ Spill Bucket O&M Checklist

- ❑ **Keep your spill bucket empty of liquids.**
  Some spill buckets are equipped with a valve that allows you to drain accumulated fuel into your UST. Others may be equipped with a manual pump so fuel can be put into your UST by pumping it through the fill pipe. However, keep in mind that when you pump out or drain your spill bucket into your UST, any water and debris may also enter the UST. If a basin is not equipped with drain valve or pump, then any accumulated fuel or water must be removed manually and disposed of properly.
- ❑ **Periodically check your spill bucket to remove any debris.**
  Debris could include soil, stones, or trash.
- ❑ **Periodically check to see if your spill bucket is still liquid tight.**
  Have a qualified UST contractor inspect your spill bucket for signs of wear, cracks, or holes. Based on this inspection, the contractor may suggest a test to determine if the spill bucket is tight or needs repair or replacement.

What Are The Basics Of Overfill Protection?

Your USTs must have overfill protection installed to help prevent the overfilling of tanks.

Three types of overfill protection devices are commonly used:

- Automatic Shutoff Devices
- Overfill Alarms
- Ball Float Valves

Each of these forms of overfill protection is discussed in detail on the following pages.

> If your UST ***never*** receives deliveries of more than 25 gallons at a time, the UST does not need to meet the overfill protection requirements. Many used oil tanks fall into this category. Even though these USTs are not required to have overfill protection, you should consider using overfill protection as part of good UST system management.

How Can You Help The Delivery Person Avoid Overfills?

To protect your business, you must make every effort to help the delivery person avoid overfilling your UST.

Use A Checklist On Correct Filling Practices

If correct filling practices are used, you will not exceed the UST's capacity — see page 33 for a checklist on correct filling procedures. Overfills are caused when the delivery person makes a mistake, such as ignoring an overfill alarm.

Use Signs, Alert Your Delivery Person

The delivery person should know what type of overfill device is present on each tank at your facility and what action will occur if the overfill device is triggered — such as a visual and/or audible alarm or that the product flow into the tank will stop or slow significantly.

Educate and alert your delivery person by placing a clear sign near your fill pipes, in plain view of the delivery person. An example of such a sign follows on the next page.

DELIVERY PERSON — AVOID OVERFILLS

- An **overfill alarm** is used for overfill protection at this facility.
- Do not tamper with this alarm in any attempt to defeat its purpose.
- When the tank is 90% full, the overfill alarm whistles and a red light flashes.
- **If you hear the alarm whistle or see the red light flashing,**

STOP THE DELIVERY IMMEDIATELY!

Make Sure You Order The Right Amount

Also, you need to **make sure you've ordered the right amount of product for delivery.** Order only the quantity of fuel that will fit into 90% of the tank. For example, if you have a 10,000 gallon tank with 2,000 gallons already in the tank, you would order at the most a 7,000 gallon delivery (90% of 10,000 is 9,000 gallons; subtracting the 2,000 gallons already in the tank leaves a maximum delivery of 7,000 gallons). Use the checklist formula on page 33 below. Do your homework right and you reduce the chance of overfills.

What Should You Do To Operate And Maintain Your Automatic Shutoff Device?

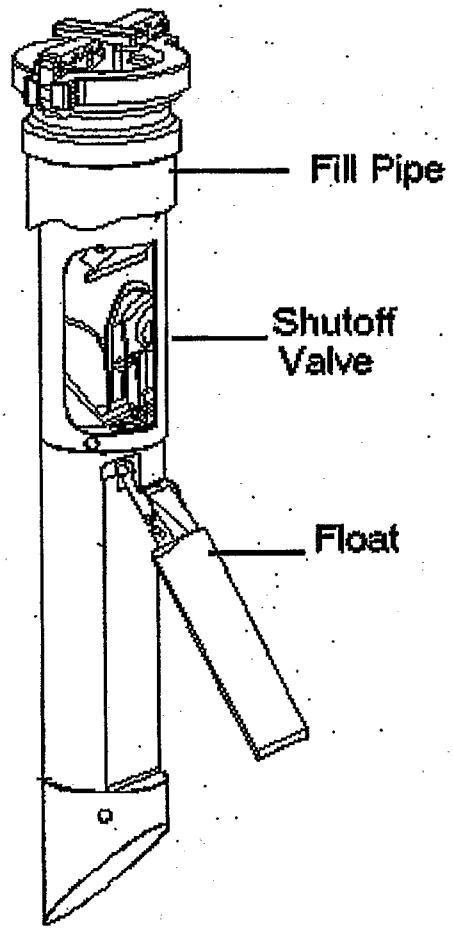

The automatic shutoff device is a mechanical device installed in line with the drop tube within the fill pipe riser. It slows down and then stops the delivery when the product has reached a certain level in the tank. It should be positioned so that the float arm is not obstructed and can move through its full range of motion.

When installed and maintained properly, the shutoff valve will shut off the flow of fuel to the UST at 95% of the tank's capacity or before the fittings at the top of the tank are exposed to fuel.

You should not use an automatic shutoff device for overfill protection if your UST receives pressurized deliveries.

✔ Basic O&M Checklist For Automatic Shutoff Devices

- ❑ A qualified UST contractor periodically checks to make sure that the automatic shutoff device is functioning properly and that the device will shut off fuel flowing into the tank at 95% of the tank capacity or before the fittings at the top of the tank are exposed to fuel:
  - Make sure the float operates properly.
  - Make sure that there are no obstructions in the fill pipe that would keep the floating mechanism from working.
- ❑ You have posted signs that the delivery person can easily see and that alert the delivery person to the overfill warning devices and alarms in use at your facility.

What Should You Do To Operate And Maintain Your Electronic Overfill Alarm?

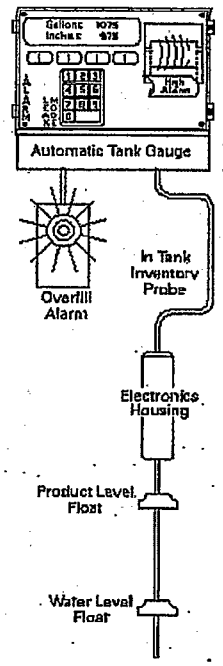

This type of overfill device activates an audible and/or visual warning to delivery personnel when the tank is either 90% full or is within one minute of being overfilled. **The alarm <u>must</u> be located so that it can be seen and/or heard from the UST delivery location.** Once the electronic overfill alarm sounds, the delivery person has approximately one minute to stop the flow of fuel to the tank.

Electronic overfill alarm devices have no mechanism to shut off or restrict flow. Therefore, the fuel remaining in the delivery hose after the delivery has been stopped will flow into the tank as long as the tank is not yet full.

✔ Basic O&M Checklist For Overfill Alarms

- ❑ A qualified UST contractor periodically checks your electronic overfill alarm to make sure that it is functioning properly and that the alarm activates when the fuel reaches 90% of the tank capacity or is within one minute of being overfilled:
  - Ensure that the alarm can be heard and/or seen from where the tank is fueled.
  - Make sure that the electronic device and probe are operating properly.
- ❑ You have posted signs that the delivery person can easily see and that alert the delivery person to the overfill warning devices and alarms in use at your facility.

What Should You Do To Operate And Maintain Your Ball Float Valve?

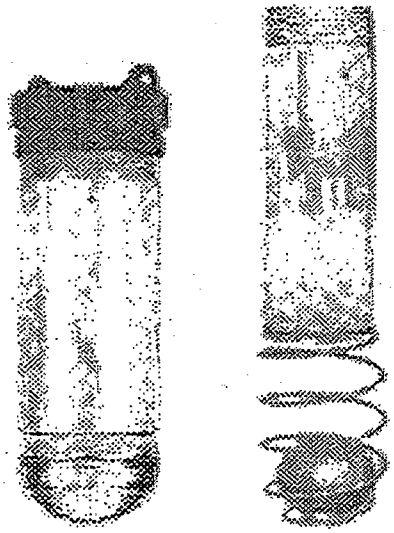

The ball float valve — also called a float vent valve — is installed at the vent pipe in the tank and restricts vapor flow in an UST as the tank gets close to being full. The ball float valve should be set at a depth which will restrict vapor flow out of the vent line during delivery at 90% of the UST's capacity or 30 minutes prior to overfilling.

As the tank fills, the ball in the valve rises, restricting the flow of vapors out of the UST during delivery. The flow rate of the delivery will decrease noticeably and should alert the delivery person to stop the delivery.

For ball float valves to work properly, the top of the tank must be air tight so that vapors cannot escape from the tank. Everything from fittings to drain mechanisms on spill buckets must be tight and be able to hold the pressure created when the ball float valve engages.

You should not use a ball float valve for overfill protection if any of the following apply:

- **Your UST receives pressurized deliveries.**
- **Your UST system has suction piping.**
- **Your UST system has single point (coaxial) stage 1 vapor recovery.**

✔ Basic O&M Checklist For Ball Float Valves

- ❑ A qualified UST contractor periodically checks to make sure that the ball float valve is functioning properly and that it will restrict fuel flowing into the tank at 90% of the tank capacity or 30 minutes prior to overfilling:
  - Ensure that the air hole is not plugged.
  - Make sure the ball cage is still intact.
  - Ensure the ball still moves freely in the cage.
  - Make sure the ball still seals tightly on the pipe.
- ❑ You have posted signs that the delivery person can easily see and that alert the delivery person to the overfill warning devices and alarms in use at your facility.

✔ Spill And Overfill O&M Checklist

Spill Bucket	❑ **Keep your spill bucket empty of liquids.** Some spill buckets are equipped with a drainage valve which allows you to drain accumulated fuel into to your UST. Others can be equipped with a manual pump so fuel can be put into your UST by pumping it through the fill pipe. However, keep in mind that when you pump out or drain your spill bucket into your UST, any water and debris may also enter the UST. If a spill bucket is not equipped with a drain valve or pump, then any accumulated fuel or water must be removed manually and disposed of properly. ❑ **Periodically check your spill bucket to remove any debris.** Debris could include soil, stones, or trash. ❑ **Periodically check to see if your spill bucket is still liquid tight.** Have a qualified UST contractor inspect your spill bucket for signs of wear, cracks, or holes. Based on this inspection, the contractor may suggest a test to determine if the spill bucket is tight or needs repair or replacement.
Automatic Shutoff Devices	❑ A qualified UST contractor periodically checks to make sure that the automatic shutoff device is functioning properly and that the device will shut off fuel flowing into the tank at 95% of the tank capacity or before the fittings at the top of the tank are exposed to fuel: • Make sure the float operates properly. • Make sure that there are no obstructions in the fill pipe that would keep the floating mechanism from working. ❑ You have posted signs that the delivery person can easily see and that alert the delivery person to the overfill warning devices and alarms in use at your facility.
Overfill Alarms	❑ A qualified UST contractor periodically checks your electronic overfill alarm to make sure that it is functioning properly and that the alarm activates when the fuel reaches 90% of the tank capacity or is within one minute of being overfilled: • Ensure that the alarm can be heard and/or seen from where the tank is fueled. • Make sure that the electronic device and probe are operating properly. ❑ You have posted signs that the delivery person can easily see and that alert the delivery person to the overfill warning devices and alarms in use at your facility.
Ball Float Valves	❑ A qualified UST contractor periodically checks to make sure that the ball float valve is functioning properly and that it will restrict fuel flowing into the tank at 90% of the tank capacity or 30 minutes prior to overfilling: • Ensure that the air hole is not plugged. • Make sure the ball cage is still intact. • Ensure the ball still moves freely in the cage. • Make sure the ball still seals tightly on the pipe. ❑ You have posted signs that the delivery person can easily see and that alert the delivery person to the overfill warning devices and alarms in use at your facility.

What Are Your Responsibilities For Correct Filling Practices?

As an owner or operator you are responsible for ensuring that releases due to spilling or overfilling do not occur during fuel delivery.

As part of this responsibility, you must:

- Ensure that the amount of product to be delivered will fit into the available empty space in the tank; and
- Ensure that the transfer operation is monitored constantly to prevent overfilling and spilling.

One way help ensure the above requirements are met is to follow the checklist on the next page. The checklist describes necessary activities before, during, and after a fuel delivery.

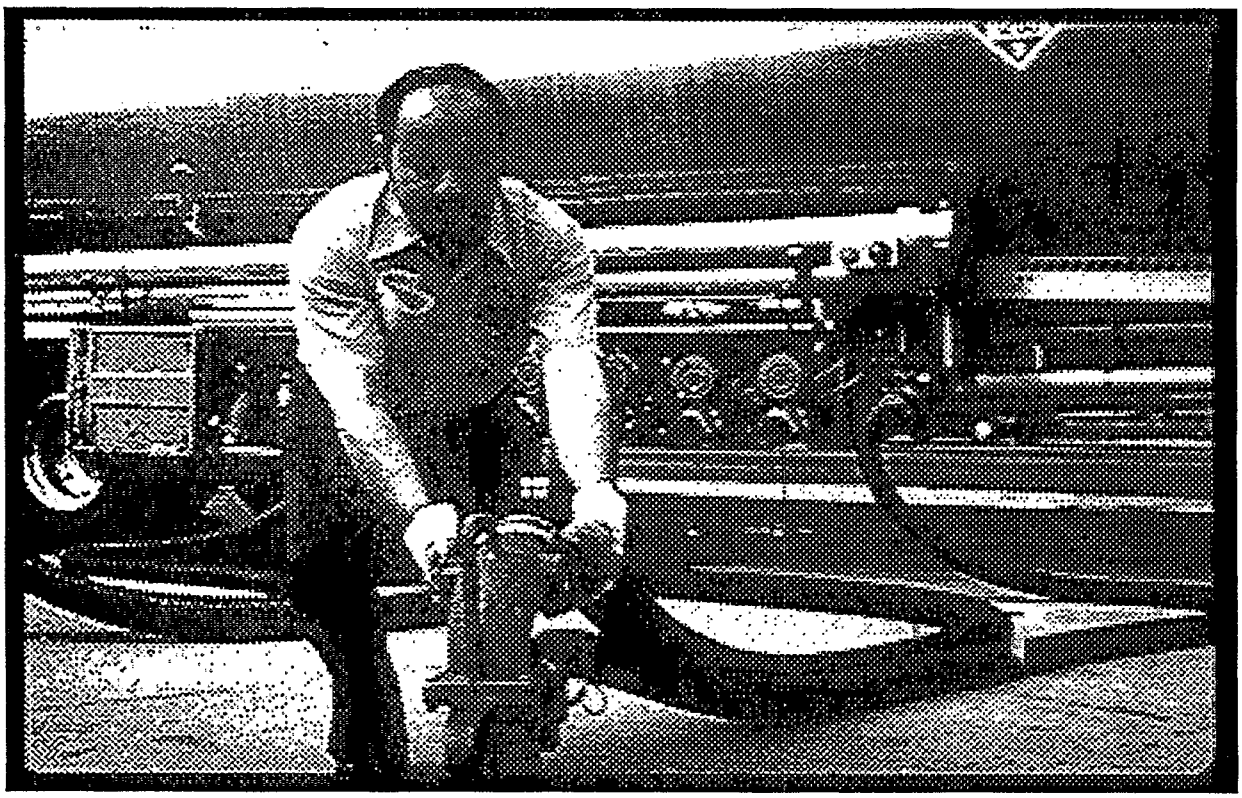

✔ Correct Filling Checklist

What To Do Before Filling Your USTs	❑ Post clear signs that alert delivery persons to the overfill devices and alarms in use at your facility. ❑ Make and record accurate readings for product and water in the tank before fuel delivery. ❑ Order only the quantity of fuel that will fit into 90% of the tank. **REMEMBER, the formula for determining the maximum amount of gasoline to order is:** (Tank capacity in gallons X 90%) — Product currently in tank = Maximum amount of fuel to order **Example:** (10,000 gal X 0.9) — 2,000 gal = 7,000 gal maximum amount to order ❑ Ensure fuel delivery personnel know the type of overfill device present at the tank and what actions to perform if it activates. For example, use sample sign on page 28 of this chapter. ❑ Review and understand the spill response procedures. ❑ Verify that your spill bucket is empty, clean, and will contain spills.
What To Do While Your USTs Are Being Filled	❑ Keep fill ports locked until the fuel delivery person requests access. ❑ Have an accurate tank capacity chart available for the fuel delivery person. ❑ The fuel delivery person makes all hook-ups. The person responsible for monitoring the delivery should remain attentive and observe the entire fuel delivery, be prepared to stop the flow of fuel from the truck to the UST at any time, and respond to any unusual condition, leak, or spill which may occur during delivery. ❑ Have response supplies readily available for use in case a spill or overfill occurs (see Section 3). ❑ Provide safety barriers around the fueling zone. ❑ Make sure there is adequate lighting around the fueling zone.
What To Do After Filling Your USTs	❑ Following complete delivery, the fuel delivery person is responsible for disconnecting all hook-ups. ❑ Return spill response kit and safety barriers to proper storage locations. ❑ Make and record accurate readings for product and water in the tank after fuel delivery. ❑ Verify the amount of fuel received. ❑ Make sure fill ports are properly secured. ❑ Ensure the spill bucket is free of product and clean up any small spills.

Section 5 — Corrosion Protection

To prevent leaks, all parts of your UST system that are underground and routinely contain product need to be protected from corrosion. The UST system includes the tank, piping, and ancillary equipment, such as flexible connectors, fittings, and pumps. Unprotected metal UST components can deteriorate and leak when underground electrical currents act upon them.

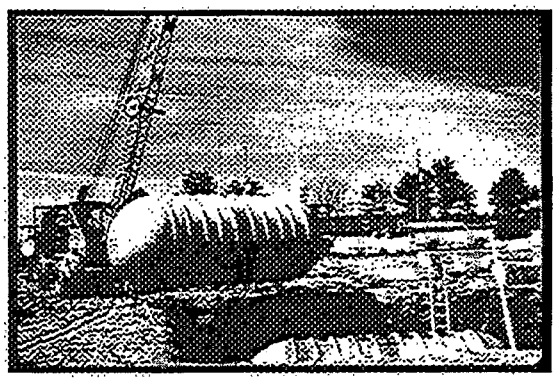

One way to protect UST components from corrosion is to **make them with nonmetallic, noncorrodible materials**, such as USTs made of (or clad or jacketed with) fiberglass reinforced plastic (FRP) or other noncorrodible materials — as illustrated by the FRP tank on the right. Noncorrodible USTs like these do not require O&M for corrosion protection.

UST components made from metal, however, that routinely contain product and are in direct contact with the ground need corrosion protection provided by cathodic protection or (in some cases) lining the interior of the tank, as described below. These options require O&M.

NOTE: Metal tanks or piping installed after December 22, 1988 must have a dielectric coating (a coating that does not conduct electricity) in addition to the cathodic protection described below.

Cathodic Protection Using Sacrificial Anode Systems

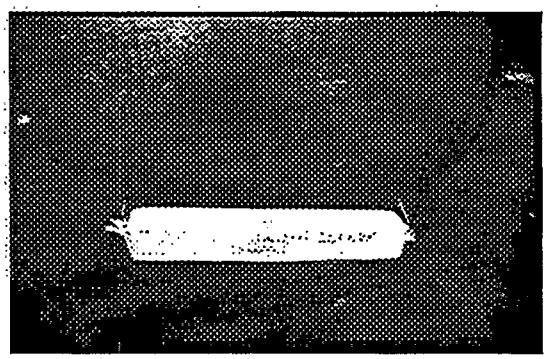

Sacrificial anodes are buried and attached to UST components for corrosion protection — as illustrated on the right by an anode attached to a tank. Anodes are pieces of metal that are more electrically active than steel, and thus they suffer the destructive effects of corrosion rather than the steel they are attached to.

Cathodic Protection Using Impressed Current Systems

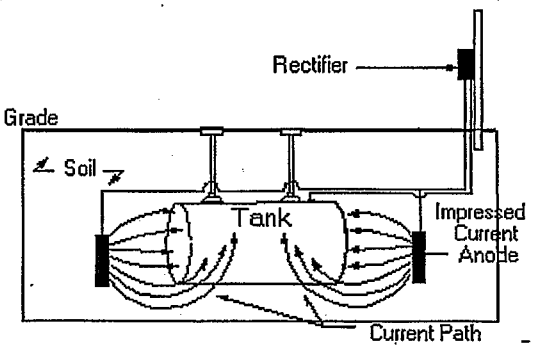

An impressed current system — as shown on the right — uses a rectifier to provide direct current through anodes to the tank or piping to achieve corrosion protection. The steel is protected because the current going to the steel overcomes the corrosion-causing current flowing away from it. **The cathodic protection rectifier must always be on and operating to protect your UST system from corrosion.**

Corrosion Protection Using Internal Lining Of The Tank

This corrosion protection option applies only to tanks installed before December 22, 1988. These older tanks can be internally lined by trained professionals to meet the corrosion protection requirements — as shown on the right, in which a professional follows industry codes to safely and effectively line a tank's interior.

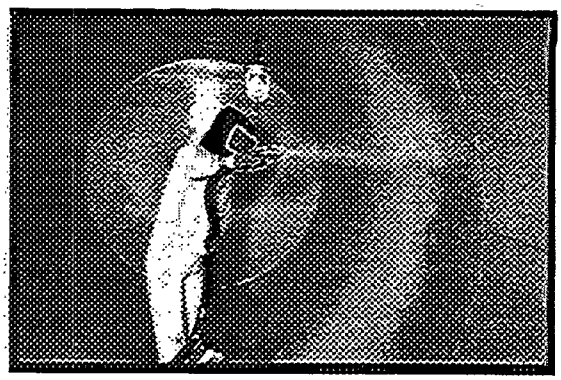

It may help you to see your corrosion protection options displayed in the following table.

Corrosion Protection Choices

Option	Description
Noncorrodible Material	The tank or piping is constructed of noncorrodible material.
Steel Tank Clad or Jacketed with a Noncorrodible Material	Examples of cladding or jacket material include fiberglass and urethane. Does not apply to piping.
Coated and Cathodically Protected Steel Tanks or Piping	Steel tank and piping is well-coated with a dielectric material and cathodically protected.
Cathodically Protected Noncoated Steel Tanks or Piping	This option is only for steel tanks and piping installed before December 22, 1988. Cathodic protection is usually provided by an impressed current system.
Internal Lining of Tanks	This option is only for steel tanks installed before December 22, 1988. A lining is applied to the inside of the tank. Does not apply to piping.
Combination of Cathodically Protected Steel and Internal Lining of Tanks	This option is only for steel tanks installed before December 22, 1988. Cathodic protection is usually provided by an impressed current system. Does not apply to piping.
Other Methods Used to Achieve Corrosion Protection	If you have tanks or piping that do not meet any of the descriptions above, check with your state UST agency to see if your UST system meets the requirements for corrosion protection. You also will need to ask about the operation, maintenance, and recordkeeping requirements applicable to this type of UST system.

NOTE: In addition to tanks and piping, all other metal components in direct contact with the ground that routinely hold product — such as flexible connectors, swing joints, fittings, and pumps — must also be cathodically protected.

Use the O&M Checklist on the next page. Following the Checklist look for recordkeeping forms and discussions of special corrosion protection situations.

✔ Basic O&M Checklist For Corrosion Protection

Sacrificial Anode Cathodic Protection Systems	**You need to have a periodic test conducted by a qualified corrosion tester to make sure your cathodic protection system is adequately protecting your UST system. This test needs to be conducted:** ❑ Within 6 months of installation. ❑ At least every 3 years after the previous test. ❑ Within 6 months after any repairs to your UST system. • Make sure that the professional tester is qualified to perform the test and follows a standard code of practice to determine that test criteria are adequate. • If any test indicates that your tanks are not adequately protected, you need to have a corrosion expert examine and fix your system. • Testing more frequently can catch problems before they become big problems. ❑ **You need to keep the results of at least the last two tests on file.** See the next page for a cathodic protection test recordkeeping form.
Impressed Current Cathodic Protection Systems	**You need to have a periodic test conducted by a qualified corrosion tester to make sure your cathodic protection system is adequately protecting your UST system. This test needs to be conducted:** ❑ Within 6 months of installation. ❑ At least every 3 years after the previous test. ❑ Within 6 months after any repairs to your UST system. • Make sure that the professional tester is qualified to perform the test and follows a standard code of practice to determine that test criteria are adequate. • If any test indicates that your tanks are not adequately protected, you need to have a corrosion expert examine and fix your system. • Testing more frequently can catch problems before they become big problems. ❑ **You need to keep the results of at least the last two tests on file.** See next page for a cathodic protection test recordkeeping form. ❑ **You need to inspect your rectifier at least every 60 days to make sure that it is operating within normal limits.** • This inspection involves reading and recording the voltage and amperage readouts on the rectifier. You or your employees can perform this periodic inspection. • Make sure that your cathodic protection professional provides you with the rectifier's acceptable operating levels so that you can compare the readings you take with an acceptable operating level. If your readings are not within acceptable levels, you must contact a cathodic protection professional to address the problem. ❑ **You need to keep records of at least the last 3 rectifier readings.** See page 39 for a "60-Day Inspection Results" recordkeeping form. ❑ **You should have a trained professional periodically service your impressed current system.** ❑ **Never turn off your rectifier!**
Internally Lined Tanks	❑ Within 10 years after lining and at least every 5 years thereafter, the lined tank must be inspected by a trained professional and found to be structurally sound with the lining still performing according to original design specifications. Make sure the professional performing the inspection follows a standard code of practice. ❑ **Keep records of the inspection (as specified in industry standards for lining inspections).**

Record for Periodic Testing of Cathodic Protection Systems

(for use by a qualified cathodic protection tester)

TEST DATE:____/____/____ FACILITY NAME/ID:_____

NOTE: Provide site sketch as directed on the back of this page.

Cathodic Protection (CP) Tester Information:

Name: _____ Phone Number: _____

Address: _____

Testing must be conducted by a qualified CP tester. Indicate your qualifications as a CP tester:

Identify which of the following testing situations applies:

- ❑ Test required within 6 months of installation of CP system (installation date was ___/___/___)
- ❑ Test required at least every 3 years after installation test noted above
- ❑ Test required within 6 months of any repair activity – note repair activity and date below:

Indicate which industry standard you used to determine that the Cathodic Protection test criteria are adequate: _____

Cathodic Protection Test Method Used (check one)	
	100 mV Cathodic Polarization Test
	-850 mV Test (Circle 1 or 2 below) 1) Polarized Potential ("instant off") 2) Potential with CP Applied, IR Drop Considered **Note: All readings taken must meet the -850 mV criteria to pass**
	Other Accepted Method (please describe):

Is the Cathodic Protection System working properly? **Yes No (circle one)**

If answer is "No" go to the directions at the bottom on the back of this page.

My signature below affirms that I have sufficient education and experience to be a cathodic protection tester; I am competent to perform the tests indicated above; and that the results on this form are a complete and truthful record of all testing at this location on the date shown.

CP Tester Signature: _____ Date:_____

KEEP THIS PAPER ON FILE FOR AT LEAST SIX YEARS

Site Sketch: Provide a rough sketch of the tanks and piping, the location of each CP test, and each voltage value obtained (use space below or attach separate drawing). Voltage readings through concrete or asphalt do not provide accurate readings and are not acceptable. Perform sufficient testing to evaluate the entire UST system.

If CP System fails test, you must have a corrosion expert fix the system.
If the answer was "NO" indicating that your CP system is not working, you must have a ***corrosion expert*** investigate and fix the problem. A corrosion expert has additional training, skills, and certification beyond the corrosion tester who filled out the bulk of this form. A corrosion expert must be 1) accredited/certified by NACE International (The Corrosion Society) as a corrosion specialist or cathodic protection specialist, or 2) be a registered professional engineer with certification or licensing in corrosion control. As long as you have the UST, be sure you keep a record that clearly documents what the corrosion expert did to fix your CP system.

KEEP THIS PAPER ON FILE FOR AT LEAST SIX YEARS

60-Day Inspection Results for Impressed Current Cathodic Protection Systems

FACILITY NAME:_____

AMP RANGE RECOMMENDED:_____

VOLTAGE RANGE RECOMMENDED:_____

Date	Your Name	Voltage Reading	Amp Reading	Is Your System Running Properly? (Yes/No)

- **If the rectifier voltage and/or amperage output(s) are outside the recommended operating levels, contact a cathodic protection expert to address the problem.**
- **Never turn off your rectifier.**
- **KEEP THIS RECORD FOR AT LEAST 6 MONTHS AFTER THE DATE OF THE LAST READING**

Some Special Corrosion Protection Situations

What if you have an STI-P3 tank with a PP4 test station?

If you have a PP4 test station installed with an STI-P3 tank, you may perform the periodic testing of your cathodic protection system by using the meter provided to you with the PP4 test station.

- Don't forget to record the result of the reading and keep at least the last two results.
- If your test readings do not pass, you must take action to correct the problem. Call your installer and ask that the corrosion expert who designed the system examine it and correct the problem.

What if you combine internal lining and cathodic protection?

If you chose the combination of internal lining and cathodic protection for meeting corrosion protection requirements on your UST, you may not have to meet the periodic inspection requirement for the lined tank. However, you must always meet the requirements for checking and testing your cathodic protection system as described in the Basic O&M Checklist For Corrosion Protection on the page 36. The 10-year and subsequent 5-year inspections of the lined tank are not required if the integrity of the tank was ensured when cathodic protection was added. You should be able to show an inspector documentation of the passed integrity assessment.

Example 1:
If you have cathodic protection and internal lining applied to your tank at the same time, periodic inspections of the lined tank **are not** required because an integrity assessment of the tank is required prior to adding the cathodic protection and internal lining.

Example 2:
If you had cathodic protection added to a tank in 1997 that was internally lined in 1994 and the contractor did not perform an integrity assessment of the tank at the time cathodic protection was added (or you cannot show an inspector documentation of the passed integrity assessment), then periodic inspections of the lined tank **are** required because you cannot prove that the tank was structurally sound and free of corrosion holes when the cathodic protection was added. The lined tank needs to be periodically inspected because the lining may be the only barrier between your gasoline and the surrounding environment.

What if you have a double-walled steel UST with interstitial monitoring and cathodic protection?

If you have a cathodically protected double-walled steel tank and you use interstitial monitoring capable of detecting a breach in both the inner and outer wall or ingress of product and water as your method of leak detection, then you should monitor your cathodic protection system within six months of installation and following any activity that could affect the CP system.

If you are using impressed current cathodic protection, you still need to perform the 60-day checks of your recifier to make sure that it is operating within normal limits.

- Testing the cathodic protection system more frequently may help catch problems quicker.
- If your test readings do not pass, you must take action to correct the problem. Call your installer and ask that the corrosion expert who designed the system examine it and correct the problem.
- Don't forget to keep at least the last two results of your cathodic protection testing.

Do all UST sites need corrosion protection?

A corrosion expert may be able to determine that the soil at an UST site is not conducive to corrosion and will not cause the tank or piping to have a release during its operating life. If so, you must keep a record of that corrosion expert's analysis for the life of the tank or piping to demonstrate why your UST has no corrosion protection.

Section 6 — Frequent Walk-Through Inspections

You should conduct basic walk-through inspections of your facility **at least monthly** to make sure that your essential equipment is working properly and that you have release response supplies on hand.

These inspections would not be as thorough as following the O&M checklists presented earlier in this booklet, but they can provide a quick overview you can do more often than the longer checklists. You might think of this level of inspection as sort of like the dashboard indicators we respond to in our automobiles that provide us with status warnings like "low battery."

When you perform your walk-through inspection you should quickly check at least the following:

- **Release Detection System:** Is your release detection equipment working properly? For example, did you run a quick "self-test" of the ATG to verify it's working properly? Or did you check your manual dip stick to make sure it's not warped or worn?
- **Spill Buckets:** Are spill buckets clean, empty, and in good shape?
- **Overfill Alarm (if you have one):** Is your overfill alarm working and easily seen or heard?
- **Impressed Current Cathodic Protection System (if you have one):** Is your cathodic protection system turned on? Are you checking your rectifier at least every 60 days?
- **Fill and Monitoring Ports:** Are covers and caps tightly sealed and locked?
- **Spill and Overfill Response Supplies:** Do you have the appropriate supplies for cleaning up a spill or overfill?

In addition, good UST site management should also include the following quick visual checks:

- **Dispenser Hoses, Nozzles, and Breakaways:** Are they in good condition and working properly?
- **Dispenser and Dispenser Sumps:** Any signs of leaking? Are the sumps clean and empty?
- **Piping Sumps:** Any signs of leaking? Are the sumps clean and empty?

If you find any problems during the inspection, you or your UST contractor need to take action quickly to resolve these problems and avoid serious releases.

A frequent walk-through checklist is provided for your use on the next page.

✔ Frequent Walk-Through Inspection Checklist

Date of Inspection						
Release Detection System: Inspect for proper operation.						
Spill Buckets: Ensure spill buckets are clean and empty.						
Overfill Alarm: Inspect for proper operation. Can a delivery person hear or see the alarm when it alarms?						
Impressed Current System: Inspect for proper operation.						
Fill and Monitoring Ports: Inspect all fill/monitoring ports and other access points to make sure that the covers and caps are tightly sealed and locked.						
Spill and Overfill Response Supplies: Inventory and inspect the emergency spill response supplies. If the supplies are low, restock the supplies. Inspect supplies for deterioration and improper functioning.						
Dispenser Hoses, Nozzles, and Breakaways: Inspect for loose fittings, deterioration, obvious signs of leakage, and improper functioning.						
Dispenser and Dispenser Sumps: Open each dispenser and inspect all visible piping, fittings, and couplings for any signs of leakage. If any water or product is present, remove it and dispose of it properly. Remove any debris from the sump.						
Piping Sumps: Inspect all visible piping, fittings, and couplings for any signs of leakage. If any water or product is present, remove it and dispose of it properly. Remove any debris from the sump.						

Your initials in each box below the date of the inspection indicate that the device/system was inspected and OK on that date.

Section 7 — For More Information

This section identifies UST program contacts and other resources that can help answer your questions and provide you with information about good UST management.

Internet Resources

Government Links

- Directory of State UST Program Contacts: http://www.epa.gov/oust/states/statcon1.htm
- Directory of State UST Program Internet Sites: http://www.epa.gov/oust/states/stateurl.htm
- U.S. Environmental Protection Agency's Office of Underground Storage Tanks Home Page: http://www.epa.gov/oust. To go directly to the compliance assistance section of the Home page go to : http://www.epa.gov/swerust1/cmplastc/index.htm
- Tanks Subcommittee of the Association of State and Territorial Solid Waste Management Officials (ASTSWMO): http://www.astswmo.org/tanks.htm
- New England Interstate Water Pollution Control Commission (NEIWPCC): http://www.neiwpcc.org/educate.html#links

Professional And Trade Association Links

- American Petroleum Institute (API): http://www.api.org/
- American Society of Testing and Materials (ASTM): http://www.astm.org/index.html
- Fiberglass Tank and Pipe Institute (FTPI): http://www.fiberglasstankandpipe.com
- NACE International - The Corrosion Society: http://www.nace.org/
- National Fire Protection Association (NFPA) : http://www.nfpa.org
- Petroleum Equipment Institute (PEI): http://www.pei.org
- Steel Tank Institute (STI): http://www.steeltank.com/
- Underwriters Laboratories (UL): http://www.ul.com

Free Informative Publications Available

The publications listed below are free and available from the U.S. Environmental Protection Agency (EPA). You can access these publications in the following ways.

- Go to EPA's Web site at http://www.epa.gov/swerust1/pubs/index.htm to order, read, or download documents online.
- Call EPA's **toll-free** RCRA/Superfund Hotline at (800) 424-9346 and order **free** copies or ask questions.
- Write and ask for **free** publications by addressing your request to EPA's publication distributor: National Service Center for Environmental Publications (NSCEP), Box 42419, Cincinnati, OH 45242.
- For **free** copies, call EPA's publication distributor's **toll-free** number at (800) 490-9198 or fax (513) 489-8695.
- **Fax-on-Demand:** Dial (202) 651-2098 on your fax to access over 220 UST documents.

Catalog Of EPA Materials On USTs
An annotated list of UST materials, including ordering information. Most of the leaflets, booklets, videos, and software items listed provide UST owners and operators with information to help them comply with federal UST requirements (32 pages).

Musts For USTs: A Summary Of Federal Regulations For Underground Storage Tank Systems
Plain language summary of federal UST requirements for installation, release detection, spill, overfill, and corrosion protection, corrective action, closure, reporting and recordkeeping. Updated & revised 1995 (36 pages).

Straight Talk On Tanks: Leak Detction Methods For Petroleum Underground Storage Tanks
Explains federal regulatory requirements for leak detection and briefly describes allowable leak detection methods.
Updated & revised 1997 (28 pages).

Getting The Most Out Of Your Automatic Tank Gauging System
Trifold leaflet provides UST owners and operators with a basic checklist they can use to make sure their automatic tank gauging systems work effectively and provide compliance with federal leak detection requirements.

Doing Inventory Control Right: For Underground Storage Tanks
Booklet describes how owners and operators of USTs can use inventory control and periodic tightness testing to temporarily meet federal leak detection requirements. Contains recordkeeping forms (16 pages).

Manual Tank Gauging: For Small Underground Storage Tanks
Booklet provides simple, step-by-step directions for conducting manual tank gauging for tanks 2,000 gallons or smaller. Contains recordkeeping forms (12 pages).

List Of Leak Detection Evaluations For UST Systems
A summary of specifications, based on third-party certifications, for over 275 systems that detect leaks from USTs and their piping. Each summary provides information on such items as certified detectable leak rate/threshold, test period duration, product applicability, calibration requirements, restrictions on the use of the device, and so on.

List Of Integrity Assessment Evaluations For USTs
A list of integrity assessment procedures that have been successfully evaluated and certified by a qualified independent third party to meet specified performance criteria.

Introduction To Statistical Inventory Reconciliation: For Underground Storage Tanks
Booklet describes how Statistical Inventory Reconciliation (SIR) can meet federal leak detection requirements (12 pages).

Are You Upgrading An Underground Storage Tank System?
Trifold leaflet can help UST owners and operators make sound decisions about choosing tank integrity assessment methods and upgrading USTs to meet 1998 deadline requirements.

Closing Underground Storage Tanks: Brief Facts
Trifold leaflet presents "brief facts" on properly closing USTs in order to comply with federal closure requirements.

Underground Storage Tanks: Requirements And Options
Trifold leaflet alerts UST owners and operators who are "nonmarketers" (who do not sell stored petroleum) that they need either to find alternatives to managing their USTs or to make decisions about UST compliance.

Dollars And Sense: Financial Responsibility Requirements For Underground Storage Tanks
Booklet summarizes the "financial responsibility" required of UST owners and operators (16 pages).

List Of Known Insurance Providers For Underground Storage Tanks
Provides UST owners and operators with a list of insurance providers who may be able to help them comply with financial responsibility requirements by providing suitable insurance mechanisms (12 pages).

An Overview Of Underground Storage Tank Remediation Options
Information about technologies for remediating petroleum contamination in soil and groundwater (26 pages).

Controlling UST Cleanup Costs
Fact sheet series on the cleanup process includes: *Hiring a Contractor, Negotiating the Contract, Interpreting the Bill, Managing the Process,* and *Understanding Contractor Code Words* (10 pages).

Pay-For-Performance Cleanups: Effectively Managing Underground Storage Tank Cleanups
Booklet explores potential advantages of using pay-for-performance cleanup agreements to reduce the cost and time of cleanups and more effectively manage cleanup resources (32 pages).

Financing Underground Storage Tank Work: Federal And State Assistance Programs
Booklet identifies potential sources of financial assistance to cover the costs of upgrading, replacing, or closing an UST, or of cleaning up an UST release (23 pages). *Revised and updated, March 1999.*

State Regulatory Agency Contact List

Please note that contact information frequently changes. The information below, even if not exactly correct on the day you want to use it, should get you pointed in the right direction. Regularly updated contact information can be found by calling EPA's RCRA/Superfund Hotline at (800) 424-9346. Also, you can get updated Web addresses from EPA's Web site at http://www.epa.gov/oust/states/statcon1.htm

Alabama
Alabama Dept. of Environmental Management
Groundwater Branch/UST Prog.
P.O. Box 301463
Montgomery, AL 36130-1463
UST Phone: (334) 271-7759

LUST Phone: (334) 270-5613
Fax: (334) 270-5631
(Street address: 1400 Coliseum Blvd., ZIP: 36110-2059)

Alaska
Alaska Dept. of Environmental Conservation
410 Willoughby Ave.
Juneau, AK 99801-1795
Phone: (907) 465-5200
Fax: (907) 465-5218

Arkansas
Arkansas Dept. of Environmental Quality
Regulated Storage Tanks Division
P.O. Box 8913
Little Rock, AR 72209-8913
Phone: (501) 682-0999
Fax: (501) 682-0880
(Street address: 8001 National Drive, ZIP: 72209)

Arizona
UST Contact
Arizona Dept. of Environmental Quality
Waste Programs Division
UST & Program Support Section
3033 North Central Ave.
Phoenix, AZ 85012-2905
Phone: (602) 207-4255
Fax: (602) 207-4346

LUST Contact
Arizona Dept. of Environmental Quality
Waste Programs Division
UST Corrective Action Section
3033 North Central Ave.
Phoenix, AZ 85012-2905
Phone: (602) 207-4303
Fax: (602) 207-4346

California
California State Water Resources Control Board
UST Program
P.O. Box 944212
Sacramento, CA 94244-2120
Phone: (916) 227-4313
Fax: (916) 227-4349
(Street address: 2014 T Street, Suite 130, ZIP: 95814)

Colorado
Colorado Dept. of Labor and Employment
Oil Inspection Section
1515 Arapahoe St.
Tower 3, Suite 610
Denver, CO 80202-2117
Phone: (303) 620-4300
Fax: (303) 620-4028

Connecticut
Connecticut Dept. of Environmental Protection
Bureau of Waste Management
UST Program
State Office Bldg.
79 Elm Street
Hartford, CT 06106-5127
UST Phone: (860) 424-3374

LUST Phone: (860) 424-3376
Fax: (860) 424-4061

Delaware
Delaware Dept. of Natural Resources & Environmental Control
Early Compl. & Detect. Incentive Program

Key

UST = Underground Storage Tank
LUST = Leaking UST

UST Branch
391 Lukens Dr., Riveredge Park
New Castle, DE 19720
Phone: (302) 395-2500
Fax: (302) 395-2601

District of Columbia
DC Dept. of Health
Environmental Health Admin.
Bur. Of Hazardous Materials & Toxic Substances
UST Division, 5th Floor
51 N Street, NE
Washington, DC 20002
Phone: (202) 535-2525/-2500
Fax: (202) 442-4808

Florida
Florida Dept. of Environmental Protection
Waste Management
Bur. of Petroleum Storage Systems
Twin Towers Office Bldg.
Room 403, MS 4525
2600 Blair Stone Road
Tallahassee, FL 32399-2400
Phone: (850) 488-3935
Fax: (850) 414-1521

Georgia
Georgia Dept. of Natural Resources
Environmental Protection Div.
UST Management Program
4244 International Parkway
Suite 110
Atlanta, GA 30354
Phone: (404) 362-2687
Fax: (404) 362-2654

Hawaii
Hawaii Dept. of Health
Solid and Hazardous Waste Br.
919 Ala Moana Blvd.
Suite 212
Honolulu, HI 96814
Phone: (808) 586-4226
Fax: (808) 586-7509

Idaho
Idaho Div. of Environmental Quality
UST Program
1410 North Hilton
Boise, ID 83706
Phone: (208) 373-0502
Fax: (208) 373-0576

Illinois
UST Contact:
Illinois Office of State Fire Marshal
Div. of Petroleum & Chemical Safety
1035 Stephenson Dr.
Springfield, IL 62703
Phone: (217) 785-5878
Fax: (217) 782-1062

LUST Contact:
Illinois EPA, Bureau of Land
Div. of Remediation Mgmt.
LUST Section
1021 North Grand Ave. East
Springfield, IL 62794-9276
Phone: (217) 782-6762
Fax: (217) 524-4193

Indiana
Indiana Dept. of Environmental Mgmt.
Office of Environmental Response
UST Section
P.O. Box 6015
Indianapolis, IN 46206-6015
UST Phone: (317) 308-3064
LUST Phone: (317) 308-3080
Fax: (317) 308-3086
(Street address: 2525 N. Shadeland Ave., ZIP: 46219)

Iowa
Iowa Dept. of Natural Resources
EPD/ UST Section
Wallace State Office Bldg.
502 East 9th St.
Des Moines, IA 50319-0034
Phone: (515) 281-8135
Fax: (515) 281-8895

Kansas
Kansas Dept. of Health & Environment
Bureau of Environmental Remediation
Storage Tank Section
Forbes Field, Bldg. 740
Topeka, KS 66620
Phone: (785) 296-1678
Fax: (785) 296-6190

Kentucky
Kentucky Division of Waste Management
UST Branch
14 Reilly Road
Frankfort, KY 40601
Phone: (502) 564-6716
Fax: (502) 564-1939

Louisiana
Louisiana Dept. of Environmental Quality
Office of Environ. Assessments
UST Division
P.O. Box 82178
Baton Rouge, LA 70884-2178
Phone: (225) 765-0243
Fax: (225) 765-0366
(Street Address:7290 Bluebonnet Blvd., ZIP: 70810)

Maine
Maine Dept. of Environmental Protection
Bur. of Remediation and Waste Management
Oil & Hazardous Waste Facilities Regulation Div.
Ray Bldg., 17 State House Station
Augusta, ME 04333-0017
Phone: (207) 287-2651
Fax: (207) 287-7826

Maryland
Maryland Dept. of Environment
Waste Management Admin.
Oil Control Program
2500 Broening Highway
Baltimore, MD 21224
Phone: (410) 631-3442
Fax: (410) 631-3092

Massachusetts
UST Contact:
Massachusetts Dept. of Fire Services
Underground Storage Tank Program
P.O. Box 1025, State Road
Stow, MA 01775
Phone: (978) 567-3300
Fax: (978) 567-3199

LUST Contact:
Massachusetts Dept. of Environmental Protection
Bur. of Waste Site Cleanup
Response & Remed. Div.
One Winter Street
Boston, MA 02108
Phone: (617) 556-1044
Fax: (617) 292-5530

Michigan
Michigan Dept. of Environmental Quality
Storage Tank Division
P.O. Box 30157
Lansing, MI 48909-7657
Phone: (517) 373-8168
Fax: (517) 335-2245

Minnesota
Minnesota Pollution Control Agcy
Underground Storage Tank Sys.
520 Lafayette Road North
St. Paul, MN 55155-4194
UST Phone: (651) 297-8367
LUST Phone: (651) 297-8574
Fax: (651) 297-8676

Mississippi
Mississippi Dept. of Environmental Quality
Office of Pollution Control
UST Program
P.O. Box 10385
Jackson, MS 39289-0385
Phone: (601) 961-5171
Fax: (601) 354-6612
(Street address: 2380 Hwy 80 West, ZIP: 39204)

Missouri
Missouri Dept. of Natural Resources
Hazardous Waste Program
Tanks Section
P.O. Box 176
Jefferson City, MO 65102-0176
Phone: (573) 751-6822
Fax: (573) 526-8922

Montana
Montana Dept. of Environmental Quality
Remediation Division
P.O. Box 200901
Helena, MT 59620-0901
Phone: (406) 444-1420
Fax: (406) 444-1901
(Street address: 2209 Phoenix Ave.)

Nebraska
UST Contact:
Nebraska State Fire Marshal
Flammable Liquid Storage Tank Division
246 South 14th Street
Lincoln, NE 68508-1804
Phone: (402) 471-9465
Fax: (402) 471-3118

LUST Contact:
Nebraska Dept. of Environmental Quality
Water Quality Division
LUST/ER Section
1200 N St., Suite 400
Box 98922
Lincoln, NE 68509
Phone: (402) 471-4230
Fax: (402) 471-2909

Nevada
Nevada Dept. of Conservation & Natural Resources
Environmental Protection Div
Bureau of Corrective Action
333 W. Nye Lane
Carson City, NV 89706-0851
Phone: (775) 687-5872
Fax: (775) 687-6396

New Hampshire
New Hampshire Dept. of Environmental Services
Oil Remediation & Compliance Bureau
P.O. Box 95
6 Hazen Drive
Concord, NH 03301
Phone: (603) 271-3644
Fax: (603) 271-2181

New Jersey
New Jersey Dept. of Environmental Protection
Responsible Party Site Remediation
401 East State St. (CN-028)
Trenton, NJ 08625-0028
Phone: (609) 292-8761
Fax: (609) 633-1454

New Mexico
New Mexico Environment Dept.
UST Bureau
P.O. Box 26110
1190 St. Francis Dr.
Harold Runnels Bldg.
Santa Fe, NM 87502-0110
Phone: (505) 827-0188
Fax: (505) 827-0310

New York
New York Dept. of Environmental Conservation
Bulk Storage Section
50 Wolf Road, Rm 360
Albany, NY 12233-3750
Phone: (518) 457-4351
Fax: (518) 457-4332

North Carolina
North Carolina Dept. of Environment & Natural Resources
Div. of Waste Management
UST Section
P.O. Box 29616
Raleigh, NC 27626-0616
Phone: (919) 733-8486
Fax: (919) 733-9413
(Street Address: 2728 Capital Blvd., ZIP: 27604)

North Dakota
North Dakota Dept. of Health
Div. of Waste Management
UST Program
1200 Missouri Ave.
P.O. Box 5520
Bismarck, ND 58506-5520
Phone: (701) 328-5166
Fax: (701) 328-5200

Ohio
Ohio Dept. of Commerce
Div. of State Fire Marshal
Bureau of UST Regulations
P.O. Box 687
6606 Tussing Road
Reynoldsburg, OH 43068-9009
Phone: (614) 752-7938
Fax: (614) 752-7942

Oklahoma
Oklahoma Corp. Commission
Petroleum Storage Tank Div.
P.O. Box 52000-2000
2101 North Lincoln Blvd.
Oklahoma City, OK 73152-2000
UST Phone: (405) 521-3107
LUST Phone: (405) 521-3503
Fax: (405) 521-6576

Oregon
Oregon Dept. of Environmental Quality
UST Program
811 SW Sixth Ave.
8th Floor
Portland, OR 97204
Phone: (503) 229-5913
Fax: (503) 229-6954

Pennsylvania
UST Contact:
Pennsylvania Dept. of Environmental Protection
Bur. of Watershed Conserv.
Div. of Storage Tanks
P.O. Box 8762
Harrisburg, PA 17105-8762
Toll-free UST: 1-800-42TANKS
Phone: (717) 772-5599
Fax: (717) 772-5598
(Street Address: 400 Market St., 10th Floor)

LUST Contact:
Pennsylvania Dept. of Environmental Protection
Bur. of Land Recycling & Waste Management
Storage Tank Cleanup Program
P.O. Box 8471
Harrisburg, PA 17105-8471
Phone: (717) 783-7509
Fax: (717) 787-0884
(Street Address: 400 Market St.,14th Floor)

Rhode Island
Rhode Island Dept. of Environmental Management
Office of Waste Management
UST/LUST Section
235 Promenade St.
Providence, RI 02908-5767
Phone: (401) 222-2797
Fax: (401) 222-3812

South Carolina
South Carolina Dept. of Health and Environmental Control
Div. of UST Management
2600 Bull St.
Columbia, SC 29201
Phone: (803) 898-4350
Fax: (803) 898-4330

South Dakota
South Dakota Dept. of Environment and Natural Resources
UST Program
Joe Foss Bldg.
523 East Capitol
Pierre, SD 57501
Phone: (605) 773-3296
Fax: (605) 773-6035

Tennessee
Tennessee Dept. of Environment and Conservation
Division of USTs
4th Floor, L & C Tower
401 Church St.
Nashville, TN 37243-1541
Phone: (615) 532-0945
Fax: (615) 532-0938

Texas
UST Contact:
Texas Natural Resources Conservation Commission
Registration and Evaluation Div.
Technical Services Section
MC: 135
P.O. Box 13087
Austin, TX 78711-3087
Phone: (512) 239-2182
Fax: (512)2 39-1422

LUST Contact:
Texas Natural Resources Conservation Commission
Remediation Division
PST Responsible Party Remediation Section
MC: 137
P.O. Box 13087
Austin, TX 78711-3087
Phone: (512) 239-2200
Fax: (512) 239-2216
(Street address:12100 Park 35 Circle, ZIP:78753)

Utah
Utah Dept. of Environmental Quality
Div. of Environmental Response and Remediation
UST Branch
P.O. Box 144840
Salt Lake City, UT 84114-4840
Phone: (801) 536-4100
Fax :(801) 359-8853
(Street address: 168 North 1950 West,1st Floor, ZIP 84116)

Vermont
Vermont Agency of Natural Resources
Dept. of Environmental Conservation
Waste Management Div.
UST Program
103 South Main St.
West Bldg.
Waterbury, VT 05671-0404
Phone: (802) 241-3888
Fax: (802) 241-3296

Virginia
Virginia Dept. of Environmental Quality
UST Program
P.O. Box 10009
Richmond, VA 23240-0009
UST Phone: (804) 698-4313
LUST Phone: (804) 698-4269
Fax: (804) 698-4266

Washington
Washington State Dept. of Ecology
Toxics Cleanup Program
P.O. Box 47600
Olympia, WA 98504-7600
Phone: (360) 407-7170
Fax: (360) 407-7154
(Street address:300 Desmond Dr., Lacey, WA, ZIP:98503)

West Virginia
UST Contact:
West Virginia Div. of Environmental Protection
Office of Waste Management
UST Unit
1356 Hansford St.
Charleston, WV 25301-1401
Phone: (304) 558-6371
Fax: (304) 558-2387

LUST Contact:
West Virginia Div. of Environmental Protection
Office of Environmental Remed.
LUST Unit
1356 Hansford St.
Charleston, WV 25301-1401
Phone: (304) 558-2508
Fax: (304) 558-0256

Wisconsin
UST CONTACT:
Wisconsin Dept. of Commerce
Bur. of Storage Tank Regulation
P.O. Box 7837
Madison, WI 53707-7837
Phone: (608) 266-7874
Fax: (608) 261-7725
(Street address: 201 West Washington Ave., 3rd Floor, ZIP:53703)

LUST Contact:
Wisconsin Dept. of Natural Resources
Bur. of Remed. & Redev.
P.O. Box 7921
Madison, WI 53707-7921
Phone: (608) 267-7533
Fax: (608) 267-7646

Wyoming
Wyoming Dept. of Environmental Quality
Water Quality Division
Herschler Bldg.-4th Floor West
122 West 25th St.
Cheyenne, WY 82002
Phone: (307) 777-7096
Fax: (307) 777-5973

U.S. Territories

American Samoa
American Samoa Environmental Protection Agency
Office of the Governor
American Samoa Government
ATTN: UST/LUST Program
Pago Pago, AS 96799
Phone: 011-684-639-2304
Fax: 011-684-633-5801

Northern Mariana Islands
Div. of Environmental Quality
Commonwealth of Northern Mariana Islands
P.O. Box 1304
Saipan, MP 96950
Phone: 011-670-664-8550
Fax: 011-670-664-8540

Guam
Guam Environmental Protection Agency
P.O. Box 22439 GMF
Barrigada, GU 96921
Phone: 011-671-475-1609
Fax: 011-671-475-1618

Puerto Rico
Environmental Quality Board
Commonwealth of Puerto Rico
P.O. Box 11488
Santurce, PR 00910
Phone: (787) 767-8109
Fax: (787) 767-1962

Virgin Islands
Virgin Islands Dept. of Planning and Natural Resources
1118 Water Gut Homes
Christiansted
St. Croix, VI 00820-5065
Phone: (340) 773-0565
Fax: (340) 773-9310