United States
Environmental Protection
Agency

Solid Waste And
Emergency Response
5403G

EPA 510-B-98-004
August 1998

EPA

Test Protocol For Evaluating Integrity Assessment Procedures For Underground Storage Tanks

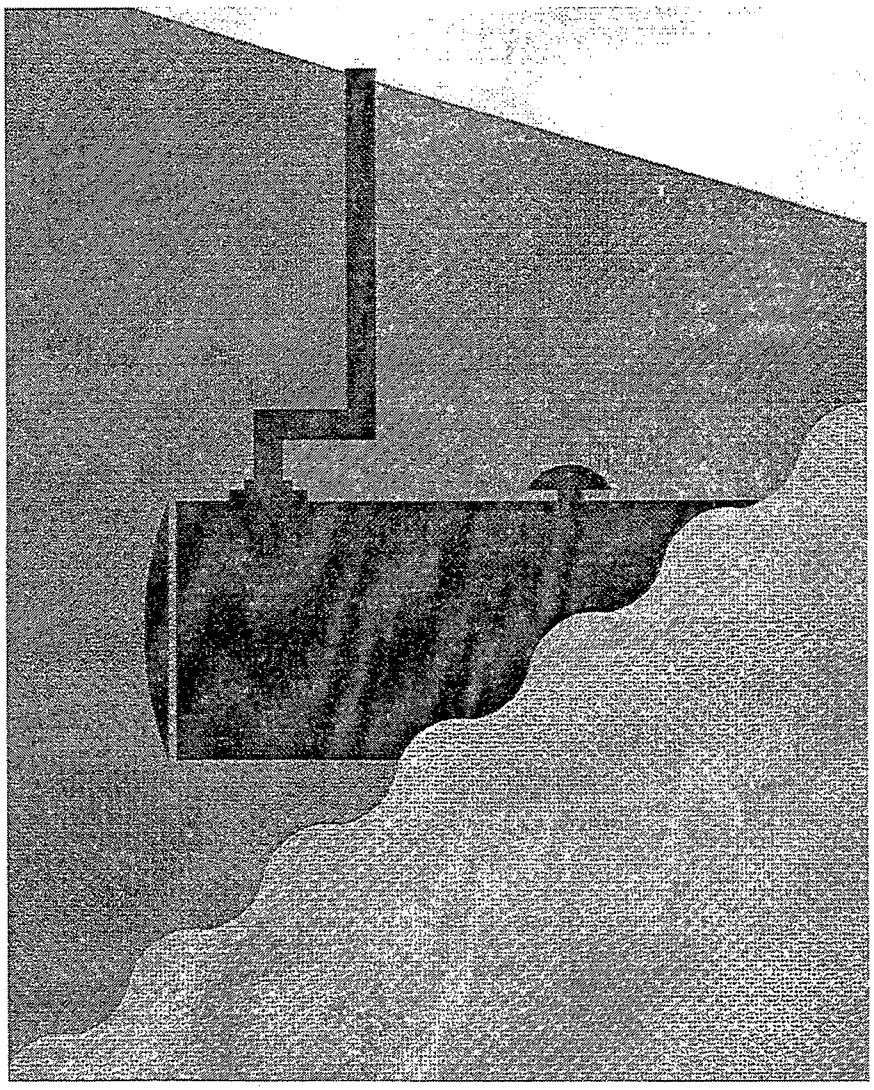

Printed on Recycled Paper

CONTENTS

Foreword ..... Page 1
Acknowledgments ..... Page 4
Quality Assurance Project Plan, including Appendices ..... Section 1
Results of Evaluation Forms ..... Section 2
Instructions for Filling Out Results Forms ..... Section 3
"Guidance on Alternative Integrity Assessment Methods ..." Memorandum ..... Section 4

FOREWORD

How to Demonstrate That Integrity Assessment Procedures For Steel USTs Meet EPA's Recommended Performance Standards

The Environmental Protection Agency's (EPA's) regulations for underground storage tanks (USTs) require that all substandard UST systems be upgraded, replaced, or closed by December 22, 1998. These regulations require that steel tanks without corrosion protection must be assessed for structural integrity. Then cathodic protection, lining, or both must be added to meet corrosion protection requirements. The federal UST regulations at 40 CFR § 280.21(b)(2) state that an assessment method may be used to ensure the integrity of steel tanks prior to upgrading with cathodic protection if one of two things is true. One is if the assessment method is specifically listed in the regulations. The other is if the agency implementing the UST program determines that an alternative assessment method prevents releases in a manner that is no less protective of human health and the environment than those listed.

Deciding whether an alternative method of integrity assessment will prevent releases in a manner that is no less protective than the methods listed in the regulations has not been easy. Vendors of such alternative methods have based their performance claims on a wide variety of test methods and data bases. EPA issued guidance on July 25, 1997, titled "Guidance on Alternative Integrity Assessment Methods for Steel USTs Prior to Upgrading with Cathodic Protection," to assist states and local implementing agencies in determining what alternative assessment methods to allow. In this guidance, EPA recommends that after March 22, 1998, implementing agencies allow alternative (non-human entry) integrity assessment methods as meeting the December 22, 1998 requirements, but only if they meet one of two options.

The first option is a national standard code of practice. Although the American Society for Testing and Materials developed an emergency standard (ASTM ES 40) for performing such methods, it has lapsed and a replacement standard has not been finalized.

The second option is a successful third-party evaluation against specified criteria. The purpose of this document is to provide a protocol for evaluating alternative integrity assessment procedures, in a form that is readily available via EPA's distribution channels, and that is consistent with the July 1997 guidance.

EPA will not test, certify, or approve specific vendor procedures for assessing the structural integrity of steel tanks. Instead, the Agency is describing how implementing agencies may determine that an alternative integrity assessment method (not listed in the regulations) meets the performance standard of preventing releases in a manner that is no less protective of human health and the environment than those listed in the regulations.

Conducting evaluation testing to demonstrate this level of release prevention is the responsibility of the vendor of such integrity assessment procedures, in conjunction with an independent third-party testing organization. In an evaluation and certification process, a vendor contracts with a third party for evaluation. The third party conducts the evaluation and

writes a report on the findings for the vendor. The vendor can then provide a copy of the report to UST owners and regulators, showing that the procedure meets EPA's recommended performance criteria. This information should be provided to UST owners and operators, who must keep the evaluation results on file to show compliance with regulatory requirements.

Within the third-party evaluation option, EPA recognizes two distinct ways to determine that an integrity assessment procedure meets the federal recommended performance criteria and should be considered to prevent releases in a manner that is no less protective than the methods listed in 40 CFR § 280.21(b)(2)(i) though (iii):

1. A qualified independent third party evaluates a vendor procedure by using EPA's standard test protocol and certifying that the procedure meets specified performance criteria regarding detection of perforations and of either internal or external damage, or;

2. A qualified independent third party evaluates a vendor procedure by using a test protocol deemed equivalent to the EPA test protocol by a nationally-recognized association or independent third-party testing laboratory.

This document discusses both "integrity assessment methods" and "vendor procedures." The usage here is that a "method" is a general technology (such as robotic devices or diagnostic modeling). A method may be described in a national standard code of practice (such as those from ASTM) and encompass multiple vendor procedures. A "vendor procedure" is an application of such a technology, typically marketed under a trademarked brand name. A vendor procedure must be successfully evaluated and certified by a third party. However, such evaluation is not necessarily recommended for each individual contractor who is the local provider of a vendor procedure.

Evaluation Process

In an evaluation and certification process, a vendor contracts with a third party for evaluation. This third party should be a qualified test laboratory, university, or not-for-profit research organization with no financial or organizational conflict of interest. Based on the nature of EPA's performance criteria, evaluations will likely be qualitative, but quantitative evaluations also are acceptable. The evaluation should be performed first *without* and then *with* any information about the leak status of the tank divulged to the vendor. The method's performance characteristics, both with leak data and without, are determined, summarized on a results form, sometimes called a "short form," and certified by the evaluator. For the purpose of determining whether a vendor procedure meets the recommended performance standards, the results of the procedure after incorporating knowledge about the leak detection test results are to be used.

Implementing agencies should allow the use of those vendor procedures successfully evaluated and certified by a qualified independent third party to meet specified performance criteria regarding detection of perforations and detection or either internal or external damage. However, those vendor procedures that were part of the 1996 field study conducted by EPA's Edison, New Jersey lab can use applicable data generated in that study as part of a more

comprehensive evaluation. In addition, even if a vendor follows a standard code of practice, it may voluntarily put its procedure through this evaluation process in order to obtain independent third-party documentation of performance.

EPA Standard Test Protocol

This document incorporates the peer-reviewed "Quality Assurance Project Plan ..." (QAPP) prepared for EPA's engineering study, "Field Evaluation of UST Inspection Assessment Technologies," conducted in 1995 and 1996. With the associated reporting forms, this document is considered a Standard Test Procedure, similar to EPA's Standard Test Procedures for Evaluating Leak Detection Methods. The Agency recommends that evaluations conducted in accordance with this document be considered valid. The original QAPP called for an assessment method to be used on approximately 100 tanks, which are then removed from the ground for testing and inspection. EPA now allows as few as 42 total tanks, with at least 21 being unsuitable per the baseline testing.

Alternative Test Protocols Deemed Equivalent to EPA's

Because of the nature of the vendor procedure, in order to take advantage of existing data, or because of improved testing methods, an alternative evaluation protocol may be more effective in a particular case than the standard protocol developed by the EPA. Removal and examination of tanks as detailed in the QAPP may not be necessary for all tanks in the evaluation. An evaluation following a protocol different than EPA's may be performed by a qualified third party as above. An approach that uses existing data to establish the baseline status can be used in lieu of some physical testing if all relevant data requirements are factored in. The development of other protocols is not precluded, but rather is encouraged. The alternative protocols should be based on the same evaluation criteria as the QAPP, and the results should include an accreditation by the association or third-party testing organization that the evaluation was at least as rigorous as the EPA standard test protocol.

Evaluation Criteria

Within EPA's recommended option for evaluation, the criteria for proving tank integrity are as follows:

One of the following:

a) Detect external pits deeper than 0.5 times the required minimum wall thickness, OR

b) Detect internal pits deeper than 0.5 times the required minimum wall thickness AND any internal cracks or separations.

Note that a perforation of a tank is regarded as a pit that is deeper than the wall thickness, whether it originated from the outside or the inside of the tank. Thus, perforations must be detected under either (a) or (b). To meet the criterion, a method must demonstrate a probability of detection of unsuitable (by one of the above criteria) tanks or sites of at least 95%. A site is considered unsuitable if any one of the tanks at the site is unsuitable. The estimated probability of false alarm is to be reported, but there is no required level for this probability. This is a change from the July 1997 guidance.

Human-Entry Inspection

This document is not intended to discourage the use of human-entry internal inspection as an assessment method or tank lining as an acceptable upgrade option. EPA's UST regulations allow for human-entry inspection and interior tank lining to be used as an upgrade option for tanks lacking corrosion protection (40 CFR § 280.21(b)(1)). This document addresses primarily methods not specifically listed in the federal regulations (see § 280.21(b)(2)(iv)), although human-entry inspection procedures can also be evaluated according to this document.

ACKNOWLEDGMENTS

This document is based on the "Quality Assurance Project Plan Field Evaluation of UST Inspection Assessment Technologies," which was produced for U.S. EPA's Office of Research and Development by IT Corporation. EPA's Work Assignment Manager was Carolyn Esposito of the National Risk Management Research Laboratory, IT's Project Manager was Janette Martin, and the primary author was Jarius D. Flora Jr., Ph.D. of Midwest Research Institute. The Foreword, Results of Evaluation forms, and instructions for the Results forms were produced by Dr. Flora and David Wiley of EPA's Office of Underground Storage Tanks (OUST). Paul Miller of OUST, Russ Brauksieck of the New York State Department of Environmental Conservation, Pejman Eshraghi of the Arizona Department of Environmental Quality, and Jeff Tobin of the Montana Department of Environmental Quality all helped, via their participation in the ad hoc Integrity Assessment Evaluations Work Group, to improve this document.

SECTION 1

Quality Assurance Project Plan
Field Evaluation of UST Inspection Assessment Technologies

October 1995

QUALITY ASSURANCE PROJECT PLAN
FIELD EVALUATION OF UST INSPECTION ASSESSMENT TECHNOLOGIES

by

IT Corporation
11499 Chester Road
Cincinnati, Ohio 45246

and

Midwest Research Institute
425 Volker Boulevard
Kansas City, Missouri 64110

Contract No. 68-C2-0108
Work Assignment No. 4-17
JTN 764396

for

U.S. ENVIRONMENTAL PROTECTION AGENCY
OFFICE OF RESEARCH AND DEVELOPMENT
NATIONAL RISK MANAGEMENT RESEARCH LABORATORY
2890 WOODBRIDGE AVENUE
EDISON, NEW JERSEY 08837-3679

Carolyn Esposito
Work Assignment Manager

October 1995

RREL QUALITY ASSURANCE PROJECT PLAN (QAPP) IMPLEMENTATION AGREEMENT

for

RREL Contracts/Inter-Agency Agreements/Cooperative Agreements/In-house Projects

RREL QA ID Number: _____ RREL Project Category: ___ QAPP Revision Date: _____

Contractor: _____

QA Project Plan Title: Field Evaluation of UST Inspection/Assessment Technologies

QAPP contributors (i.e., QA and management personnel, including subcontractors, for extramural projects and the EPA principal investigator for in-house projects) must sign below. Signatures should be acquired before submitting the QAPP to EPA for review and written approval.

Name (print)	Role - Affiliation	Agreement Signature[1,2]	Date
Carolyn L Esposito	EPA-WAM	Carolyn L Esposito	10-5-95
Thomas R Clark	IT QA Officer	Thomas R Clark	9-26-95
Dennis O'Connor	IT Senior Reviewer	Dennis O'Connor	9-21-95
Carol L. Green	MRI-QA Officer	Carol L Green	9/28/95
Janette M. Martin	IT Work Assignment Leader	Janette M. Martin	9-26-95
Robert S. Amick	Project Director	Robert S Amick	10-4-95

[1] Any substantive change to the measurement, data-gathering, or data-generation activity must be documented in a revision to the previously approved QAPP. Accordingly, this agreement must be revised, re-signed and submitted with the QAPP revision. (Note: The term "substantive change" is defined as any change in an activity that may alter the quality of data being generated or gathered.)

[2] Signing here signifies agreement with all measurements, data-gathering, and data-generation activity, as specified, in the QAPP. Above signatures indicate a commitment to implement the QAPP, approved, in writing, by the EPA.

QAPP DISTRIBUTION LIST

Carolyn Esposito	EPA/NRMRL Work Assignment Manager
Robert Amick	IT Project Manager
Janette Martin	IT Work Assignment Leader
Dennis O'Conner	IT Senior Reviewer
Thomas Clark	IT QA Manager
J.D. Flora	MRI Project Manager
C. Green	MRI QA Officer
Thomas Barlo	Project Work Group Member
Quinton Bowles	Project Work Group Member
Bopinder Phull	Project Work Group Member
Oliver Siebert	Project Work Group Member

CONTENTS

Section		Pages	Revision No.	Date Revised
Contents	List of Tables	1	1	10/04/95
Contents	List of Figures	1	1	10/04/95
1.0	Project Description	21	1	10/04/95
2.0	Quality Assurance Objectives	8	1	10/04/95
3.0	Site Selection and Sampling Procedures	10	1	10/04/95
4.0	Analytical Procedures and Calibration	2	1	10/04/95
5.0	Data Reduction, Validation, and Reporting	7	1	10/04/95
6.0	Internal Quality Control Checks	1	1	10/04/95
7.0	Performance and Systems Audits	2	0	08/16/95
8.0	Calculation of Data Quality Indicators	1	0	8/16/95
9.0	Corrective Action	1	0	8/16/95
10.0	Quality Control Reports to Management	1	0	8/16/95
11.0	References	2	1	10/04/95

CONTENTS (Cont.)

Section		Pages	Revision No.	Date Revised
Appendix A	Radiographic Testing Procedure	18	0	8/16/95
Appendix B	Baseline Testing Procedures and Data Collection Forms	13	1	10/04/95
Appendix C	Vendors' Standard Operating Procedures	0	0	8/16/95

LIST OF TABLES

Table	Title	Page
1-1	Critical or Non-Critical Data, Measurements, Records	1-9
1-2	Performance Measures for Assessment Methods	1-11
2-1	Completeness Objectives for Vendor Tests	2-4
2-2	Quantitative QA Objectives for Baseline Test Procedures	2-5
3-1	Number of Measurements	3-3
4-1	Measurement, Type, and Equipment for Baseline Testing of Tanks and Coupons	4-2
4-2	Scheduled Baseline Test Calibrations	4-2
5-1	Conclusion of Each Vendor Assessment Method	5-5
5-2	Sample Data	5-5

LIST OF FIGURES

Figure	Title	Page
1-1	Tentative Schedule for Work at an Individual Site	1-14
1-2	Tentative Schedule for Sites in the First Region	1-15
1-3	Tentative Schedule for Sites in the Remaining Four Regions	1-16
1-4	Project Organization	1-21
3-1	Coupon History Form	3-10

LIST OF ACRONYMS

ADQ	Audits of Data quality
API	American Petroleum Institute
ASME	American Society of Mechanical Engineers
ASTM	American Society for Testing Materials
CFR	Code of Federal Regulations
CP	Cathodic Protection
EPA	Environmental Protection Agency
ES	Emergency Standard
IT	International Technology Corporation
MRI	Midwest Research Institute
NACE	National Association of Corrosion Engineers
NLPA	National Leak Prevention Association
NRMRL	National Risk Management and Research Laboratory
OHSA	Occupational Health and Safety Administration
PCD	Probability of Correct Decision
PD	Probability of Detection
PFA	Probability of False Alarm
QA	Quality Assurance
QAO	Quality Assurance Officer
QAPP	Quality Assurance Project Plan

QC	Quality Control
SSPC	Steel Structures Painting Council
TSA	Technical Systems Audit
UL	Underwriters Laboratory
UST	Underground Storage Tank
WAL	Work Assignment Leader (Contractor)
WAM	Work Assignment Manager (EPA)

SECTION 1.0
PROJECT DESCRIPTION

1.1 Background

By December 22, 1998, all Underground Storage Tank (UST) systems must be replaced, upgraded, or closed according to the current Federal Regulations for USTs (40 *CFR* 280 and 281). Owners and operators choosing to upgrade their UST systems via cathodic protection or cathodic protection combined with an internal lining must determine the integrity of their system prior to upgrading. This Quality Assurance Project Plan (QAPP) presents the experimental design and criteria for evaluating the performance of four assessment methods for determining the suitability of USTs for upgrading with cathodic protection.

In order to be suitable for upgrading by cathodic protection alone (that is, without also lining the tank), in accordance with 40 *CFR* Part 280, "Technical Standards and Corrective Action Requirements for Owners and Operators of Underground Storage Tanks," the tank must be assessed to ensure that it is structurally sound and free of corrosion holes [Section 280.21(b)(2)(I)]. For tanks that are 10 years old, two alternative criteria for upgrading a tank with cathodic protection are stated in the EPA regulations (*CFR* 280.21 (2)).

> "(I) The tank is internally inspected and assessed to ensure that the tank is structurally sound and free of corrosion holes prior to installing the cathodic protection system;"
>
> "(iv) The tank is assessed for corrosion holes by a method that is determined by the implementing agency to prevent releases in a manner that is no less protective of human health and the environment than subparagraphs (I) through (iii)."

Subparagraphs (ii) and (iii) of *CFR* 280.21 (2) refer to tanks less than 10 years old. By December 22, 1998, when the Federal Regulation requires that all UST systems must either be "new" tanks, or be upgraded to new tank standards, or closed, there will be no tanks less than 10 years old that do not meet new tank standards.

Determining the integrity of UST systems usually requires some type of internal inspection or assessment. Past practices involved actual tank entry and internal inspection and required significant down time from normal operations. Recently the American Society for Testing Materials (ASTM) Committee E-50 on Environmental Assessment and Subcommittee E50.01 on Storage Tanks has issued an Emergency Standard Practice, ES 40-94, "Emergency Standard Practice for Alternative Procedures for the Assessment of Buried Steel Tanks Prior to the Addition of Cathodic Protection." The Emergency Standard Practice provides recommended minimum performance practices for three alternative methods to internal inspection for assessing the suitability of underground storage tanks for upgrading by adding cathodic protection. These three methods are tank life/corrosion rate models, remote video camera tests, and robotic ultrasonic tests. These methods do not require human entry into the tank to determine the suitability of a tank for upgrading with cathodic protection.

The three new methods include a site survey to collect basic tank and environment information. This site survey includes items such as tank age, a check for stray d-c current, other buried metal structures, tank material and electrical isolation, and tank leak and repair history. In particular, the tank is also required to have passed a suitable leak detection test. These methods all conduct basic site-specific tests of the tank environment including:

- Stray current/corrosion/interference
- Soil resistivity
- Structure to soil potential
- Soil pH
- Electrical continuity/isolation

In addition, other tests may be required by the corrosion expert including such measurements as hydrocarbon, chloride, sulfide, and sulfate ion concentrations in soil and resistance of the tank coating. Some methods have obtained approval from some State regulatory authorities; however, other State agencies are withholding approval, pending an evaluation of performance claims for these systems.

The intent of the Emergency Standard Practice is to present alternative methods for determining if cathodic protection is a reasonable and viable upgrading method for a particular tank. To do this, a corrosion engineer must consider both the condition of the tank and the condition of the soil that forms the environment for the tank. This project is designed to evaluate the performance of the three methods described in the Emergency Standard Practice, as well as the existing method of internal inspection, in determining only the condition of the tank. The procedure for this evaluation is to have vendors of each of the four methods apply that method to a set of underground storage tanks and report their results. The use of the soil data to determine the soil's compatibility with applying cathodic protection is beyond the scope of this project.

The tanks will then be removed and the actual condition of the tanks determined by a series of baseline tests, some of which are destructive. It should be noted that the non-destructive tank assessment methods are inherently limited to observing and making measurements from the interior of the tank. The baseline tests will have both the inside and outside surface of the tank shell available for determining the condition of the tank.

The performance of each method of tank assessment will be estimated by comparing its conclusion as to whether each tank was suitable for upgrading with cathodic protection to the condition of the tank determined by the baseline testing. The results of the comparison will be summarized for all tanks in the study by calculating the proportion of correct decisions reached by each tank assessment method. That is, the proportion of tanks for which each assessment method agreed with the findings of the baseline test will be calculated and reported. The proportions of each type of disagreement between the assessment methods and the baseline findings will also be calculated and reported. Regulators may use these performance estimates in deciding which methods to allow in their jurisdiction. Tank owners may use this information to select a method of assessment for their tanks.

1.2 Vendor Assessment Methods to Be Evaluated

The four vendor methods below are used to evaluate the structural soundness of the tanks.

1.2.1 Non-invasive Tank Life/Corrosion Model Tests (i.e., modeling)

This method examines the environment in the specific vicinity of the tank. A statistical model is used to determine a relationship between the aggressiveness of the environment and the rate of corrosion. The site-survey and site-specific tests noted above are to be conducted in more detail for this method than for the others. For example, the stray current measurements use a microprocessor-controlled data acquisition unit taking data samples at 5-sec intervals. The soils data are based on samples collected at 2-ft intervals from two or more holes bored at least as deep as the bottom of each of the tanks.

The data input to the model include the results of the analysis of soil samples as well as various electrical measurements (e.g., structure to soil potential). The statistical model is required to have been developed on at least 100 sites with at least 200 tanks that were excavated and inspected by a corrosion expert. The model must also include factors such as presence of a water table, annual precipitation and average temperature.

The output of the model includes an estimated leak-free life of the tank (which must have a standard deviation of no more than 1.5 years) and an estimated probability of corrosion perforation. Tanks with an age less than the estimated leak-free life and with a probability of corrosion perforation less than 0.05 (5%) may be upgraded by the addition of cathodic protection using an appropriately designed cathodic protection system. This method is described in ASTM ES 40-94.

1.2.2 Invasive Robotic Ultrasonic Tests (i.e., ultrasonic)

Following the site-survey and site-specific tank environment tests, the robotic ultrasonic equipment is installed in the tank through an existing opening (typically 4 in. in diameter). The tank will be prepared according to the vendor's specifications (in their written procedure) by the vendor. The robotic ultrasonic equipment is used to take discrete, located measurements of wall thickness on at least 15% of the entire tank interior surface. These measurements are designed to be uniformly distributed over the tank surface (excluding man-way entries). The data from a mathematical corrosion prediction model are used to forecast when each tank is expected to leak. The tank is considered suitable for upgrading with cathodic protection if there is no pitting greater than 50% of the minimum recommended wall thickness and the average metal wall thickness of each 9 ft^2 is

greater than 85% of the minimum recommended wall thickness. This method is described in ASTM ES 40-94. In the event that one of the selected tanks does not have an opening large enough for the robotic ultrasonic equipment, a larger opening will be cut in the tank, since such an opening will be cut for the internal inspection anyway.

1.2.3 Invasive Remote Video Camera Tests (i.e., video)

This method also uses the basic site survey information and the site-specific measurements described above. In addition to those, this method consists of inserting a remotely operated video camera and suitable lighting source into the tank. The tank will be prepared according to the vendor's specifications (in their written procedure) by the vendor. This video system must be capable of recording a video survey of the interior surface of the tank. The detailed requirements of the video system are included in ASTM ES 40-94.

The video system is used to survey the interior of the tank to allow the operator to first determine that the tank is sufficiently clean for effective video inspection. Then the camera is controlled to systematically record a visual inspection of the internal tank surfaces, with a recorded voice override and text input to document the direction and location of the view and comment on findings. The corrosion tester using the video will document any evidence of corrosion including:

- Perforations
- Rust tuberculation
- Streaks
- Discoloration
- Pitting
- Scaling or delaminations
- Weld corrosion
- Cracks
- Passive films

Based on this visual examination using the video camera, review of the site-specific environmental data, and tank age, the examining corrosion expert makes a determination of whether any evidence exists for corrosion or deterioration that would indicate that the tank is not suitable for

upgrading with cathodic protection, whether the tank requires further inspection by other recognized procedures, or whether the tank is suitable for upgrading with cathodic protection. In the event that one of the selected tanks does not have an opening large enough for the robotic ultrasonic equipment, a larger opening will be cut in the tank.

1.2.4 Invasive Internal Inspection (i.e., inspection)

Determination of tank structural integrity has most commonly been accomplished by means of human inspectors physically entering properly prepared tanks and using various inspection techniques. Current practice is to perform a visual inspection either alone or in combination with other measurements. The techniques that have been used in an internal inspection include: (a) visual inspection for holes, cracks, and deformation, (b) "hammer test," involving striking the inside of the tank with a ball peen hammer to identify structurally weak areas and/or judging the relative thick or thin area by the resonant sound produced; © ultrasonic transducer measurement of the wall thickness; (d) magnetic particle testing for cracks; and (e) various combinations of the previous methods. The visual inspection, and to a lesser extent visual inspection in conjunction with UT testing, is commonly performed by applicators of interior tank linings.

The internal inspection requires physical entry into a tank. Typically the top of the tank must be exposed by excavation and an opening (minimum 18 in by 18 in) cut in the top of the tank. The tank must be ventilated to provide a breathable atmosphere and to eliminate any fire hazard. Persons entering the tank must wear protective clothing and be supplied with air from a tank or outside source. Sludge must be removed from the tank and the tank cleaned and abrasively blasted prior to performing the visual inspection. The vendor must follow all applicable OHSA and other regulatory requirements. Generally the internal inspections follow the guidelines in American Petroleum Institute (API) 1631, "Interior Lining of Underground Storage Tanks, 3rd Edition, April 1992," National Leak Prevention Association (NLPA) 631 "Entry, Cleaning, Interior Inspection, Repair and Lining of Underground Storage Tanks," or NLPA 632 "Internal Inspection of Steel Tanks for Upgrading with Cathodic Protection Without Lining."

1.3 BASELINE TESTS (i.e., Baseline)

The vendor test methods are all done with the tank in the ground and consequently are limited to the interior of the tank. Corrosion and pitting may occur on the outside of the tank. The baseline tests are conducted from both sides of the tank after it has been removed from the ground to establish the actual condition of the tank. This internal and external method is similar to the visual inspection method, with several additions. The internal vertical diameter is measured while the tank is still underground, then the tank is excavated and moved for additional measurements and an access hole is cut in one end. The original location of the diameter measurement is recorded, and the internal vertical and horizontal diameters of each end are measured, then the amount of shell deformation is calculated. A grid pattern using 3 ft by 3 ft grids is marked on the inside and outside of the tank, and both the interior and exterior (before and after abrasive blasting) are visually inspected. The purpose of the inspection is to detect surface discontinuities such as cracks, holes, and pits, and to describe the amount and type of any corrosion observed. The written procedure that is applicable for this examination is that provided in Section 3.3. Photographs are used to document the condition. When rust plugs are detected, they are removed. The depths of the visually deepest pits are measured.

Ultrasonic measurements are conducted to determine wall thickness. This testing is done primarily from the inside of the tank, but may also be done from the outside. An ultrasonic test is made at the approximate center of each marked grid. Additional ultrasonic readings may be taken in any grid section based on field crew observation and judgement. Wall thicknesses will also be measured by drilling a sentry hole and using a through-wall micrometer. The minimum required initial wall thickness for each tank will be determined by the tank size in accordance with Underwriters Laboratory (UL) 58 "Standard for Steel Underground Tanks for Flammable and Combustible Liquids."

The results of the baseline measurements are used with the criteria in Section 2.2.3, "Criteria for Upgrading," to classify the tank as suitable or unsuitable for upgrading with cathodic protection.

1.4 STATEMENT OF PROJECT OBJECTIVES

The primary objective of the project is to determine the performance, i.e., proportion of correct decisions, of the four tank assessment methods. First, the four assessment methods will be conducted by vendors. Second, a baseline test on the same tanks will be conducted by the contractor. Third, the conclusion of each assessment method will be compared with the baseline findings. Fourth, the measure of performance of each tank assessment method and their 95% confidence intervals will be calculated.

The critical and noncritical data, measurements, and records for the four vendor methods and the baseline tests are provided below in Table 1-1. The equipment used for the baseline testing is also listed.

Table 1-2 classifies the tanks by the vendor's results and the actual tank condition. The cells where the vendor's result agrees with the actual condition are **correct decisions**, while those where the results disagree represent errors. The proportion of correct decisions is the number of tanks classified in the upper left and lower right cells of Table 1-2 divided by the total number of tanks.

Four secondary objectives of the project are to estimate the proportions of false alarms, correct detection, missed detections, and correct approvals. A **false alarm** occurs if a vendor's result fails a tank that is suitable for upgrading (by cathodic protection). A **correct detection** occurs if a vendor's result fails a tank that is not suitable for upgrading. A **missed detection** occurs if a vendor's result indicates that a tank is suitable for upgrading, when, in fact, its actual condition does not qualify it for upgrading. A **correct approval** occurs if the vendor's result approves a tank for upgrading and the tank is actually suitable for upgrading. Additional secondary objectives are given in Subsection 2.1.

1.5 EXPERIMENTAL DESIGN

One hundred tanks will be used in the study. This number constitutes a statistically valid population of tanks for assessing the performance of the vendor assessment methods. The total number of tanks to be included in this study was set by determining the number required so that the expected half-width of the 95% confidence interval for the probability of false alarm and probability of correct detection would be 0.15. That is, the objective of estimating the performance parameter

to within at least ±0.15 with 95% confidence would be met. This led to the selection of a sample size of 100 tanks, of which approximately half would be found suitable for upgrading with cathodic protection, as sufficient to meet this objective.

Table 1-1. Critical or Non-Critical Data, Measurements, Records

Required Data/Measurement/Record	TYPE
Modeling:	
Tank identification	C
Conclusion (suitable or unsuitable for upgrading with CP)	C
Raw data from soil and electrical measurements	NC
Expected Life of the Tank	NC
Probability of corrosion hole	NC
Ultrasonic:	
Tank identification	C
Conclusion (suitable or unsuitable for upgrading with CP)	C
If tank not suitable, reason for conclusion	NC
Data base of ultrasonic wall thickness measurements (and locations)	NC
Maximum pit depth found	NC
Average wall thickness for each 3 ft by 3 ft area	NC
Results of their prediction model	NC
Video:	
Tank identification	C
Conclusion (suitable or unsuitable for upgrading with CP)	C
If tank not suitable, reason for conclusion	NC
Presence of pits or rust tubercles on opposite surface of > 0.125 in diameter	NC
A copy of the video tape record	NC
Location of any perforations or corrosion identified by the video inspection as significant	NC

Table 1-1. Critical or Non-Critical Data, Measurements, Records

Required Data/Measurement/Record	TYPE
Inspection:	
Tank identification	C
Conclusion (suitable or unsuitable for upgrading with CP)	C
If tank not suitable, reason for conclusion	NC
Location of any perforations, deep pits, or thin walls identified	NC
Any quantitative measurements developed, e.g., wall thickness measurements	NC
Baseline:	
Tank identification	C
Presence of perforations	C
Location of perforations using grid system developed by tape measure	NC
Depth of pit for 5 deepest pits using depth micrometer	C
Location of 5 deepest pits	NC
Diameter of pits on interior using a ruler	NC
Wall thickness measurements using throughwall micrometer	C
Wall thickness measurements using an ultrasonic instrument	C
Tank diameter (vertical and horizontal) using tape measure	C
Presence of observed cracks in welds	C
Location of cracks in welds	NC
Internal and external detailed inspection results	NC
Results of any external laboratory tests recommended by field crew (e.g., radiography or sectioning of steel coupons)	NC
Photographic documentation of each tank	NC

Table 1-1. Critical or Non-Critical Data, Measurements, Records

Required Data/Measurement/Record	TYPE
Owner:	
Result of leak tests	NC
Age of tank	NC

C = Critical
NC = Non-critical

Table 1-2. Performance Measures for Assessment Methods

Actual condition	Vendor's result	
	Pass	Fail
Tank suitable for upgrading	Correct Approval (Approved a tank suitable for upgrading)	False Alarm (Failed a tank suitable for upgrading)
Tank not suitable for upgrading	Missed Detection (Incorrectly passed a tank not suitable for upgrading)	Correct Detection (Failed a tank not suitable for upgrading)

To assure that the environmental conditions at the tank sites would be representative of conditions in the United States, the contiguous 48 states were divided into 5 regions. The 100 tanks will be selected with an equal number of 20 from each of the 5 regions.

The Northwest region was chosen to represent cool, wet climates and a range of soil types. The Southwest region represents the hot, dry conditions with sandy soils typical of that area. The Midwest region represents agricultural soil types with hot summers, cold winters, and moderate precipitation. The Northeast region represents densely populated urban areas with rocky soils and climates typical of New England, and the Southeast region represents hot, wet climates with the typical red clay and other soil types found in that region.

EPA will arrange with tank owners to identify tanks previously scheduled for removal that can be used in this project. The tanks selected will be steel tanks that have not been cathodically protected or lined. The tank owners will be asked to supply data on the age of each tank, its size or

volume, the leak detection history, and any other information available. In planning, it has been assumed that all tanks at a given site (within a geographic region) would be scheduled for removal. A tank site is the specific location of the study tanks, for example, a gas station. In order to control the cost, all tanks to be removed at a given site will be included in the study. It is estimated that there will be an average of 3 tanks per site, leading to approximately 7 sites per geographic region to supply the 20 tanks. In order to obtain a variety of soil types and environmental conditions, at least 6 sites within each region will be used to provide the 20 tanks.

EPA will develop a list of available tanks and sites within each region. If there are more than 20 tanks within a geographical region, this list will be reviewed to select the tanks and sites for use in the project. The representativeness of the set of tanks is not completely under the control of the project. In addition, the tanks to be used do not need to represent the population of tanks. Ideally, approximately half of the tanks to be used should be suitable for upgrading by cathodic protection and about half should not be suitable. This would make the estimation of the two performance parameters about equally precise. To achieve representation of these two classes of tanks as well as possible, the tanks will be selected from the list of eligible tanks by selecting equal numbers of tanks from those that have recently passed a leak detection test and those that have not, if there are enough tanks in each group to allow this. If very few tanks have not passed recent leak detection tests, then about half of the tanks selected will be the oldest available. The suitability of tanks for upgrading with cathodic protection will not be known or determined until the baseline tests are conducted. Selecting tanks from these groups is an attempt to obtain approximately equal numbers of tanks in the suitable and unsuitable groups.

All tanks selected for use in the study will be tested by each of the four tank assessment methods to be evaluated. The vendors of the methods will supply their reports including conclusions as to the suitability for upgrading as well as supporting data. The supporting data should be sufficiently documented to identify the reason for disqualifying a tank, and, if a specific problem is found, the location in the tank of that problem. The vendors of each method will first present their conclusions in the absence of knowledge about the results of a leak test on the tank. Such conclusions may be stated conditionally on the results of the leak test. After the conclusions of each method without knowledge of the leak status of the tank have been stated, the leak test results will

be supplied to the vendors. The vendors will then prepare second conclusion reports incorporating the results of the leak detection test. Thus, each method will provide two sets of results for each tank, one without knowledge of the leak test result on the tank, and one incorporating the results of the leak detection test.

After the tank has been assessed using each of the four methods, the tank will be removed from the ground and subjected to baseline tests, some of which will be destructive. These tests will determine the condition of the tank based on four primary parameters:

- Presence or absence of holes
- Depth of pits, if found
- Wall thickness
- Cracks in welds

These four primary parameters will be used to determine if a tank is suitable for upgrading with cathodic protection. Because there is no single standard criterion for judging a UST suitable for upgrading with cathodic protection, the determination of suitability will be made using several different criteria, as listed in Section 2.3. For a given criterion, the probability of false alarms for each method will be estimated as the proportion of tanks judged to pass by the criterion applied to the baseline data which the method reported as unsuitable for upgrading. The probability of detection for each method will be estimated as the proportion of tanks failed by that method that are also judged to fail by the criterion applied to the baseline data. Two sets of conclusions will be reported by the method--with and without knowledge of the leak test results. Separate estimates will be made for each set of conclusions compared to each of the 4 criteria for the tank.

1.6 SCHEDULE

Three tentative schedules are presented as Figures 1-1 through 1-3. Figure 1-1 is the tentative schedule for work at an individual site; Figure 1-2 is the tentative schedule for all the sites at the first region; and Figure 1-3 is the tentative schedule for all the sites at each of the remaining regions. The comments below provide the assumptions made in developing these schedules. A minimum of 6 sites per region are required. For the schedule and budget, 7 sites per region were used.

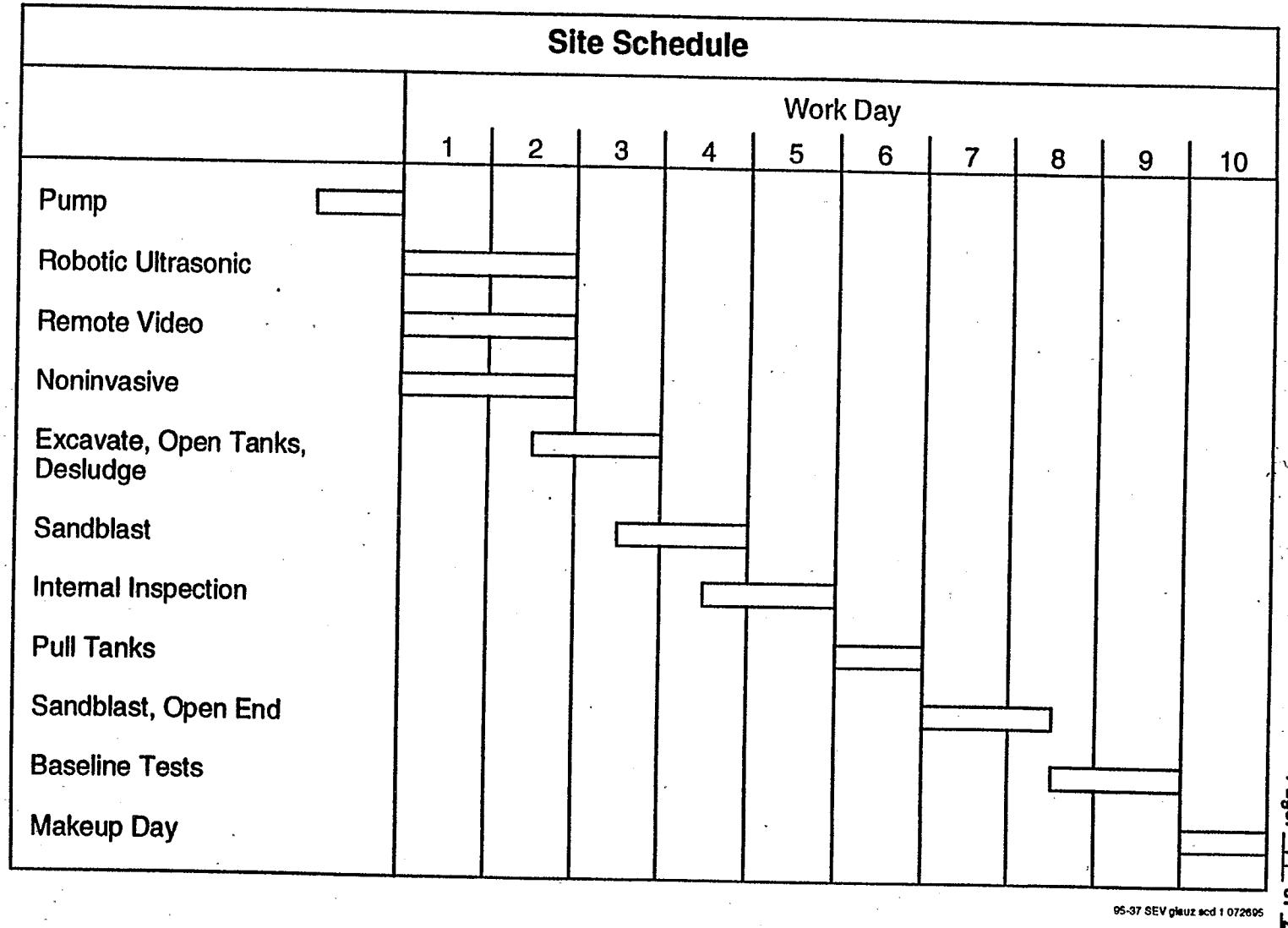

Figure 1-1. Tentative Schedule for Work at an Individual Site

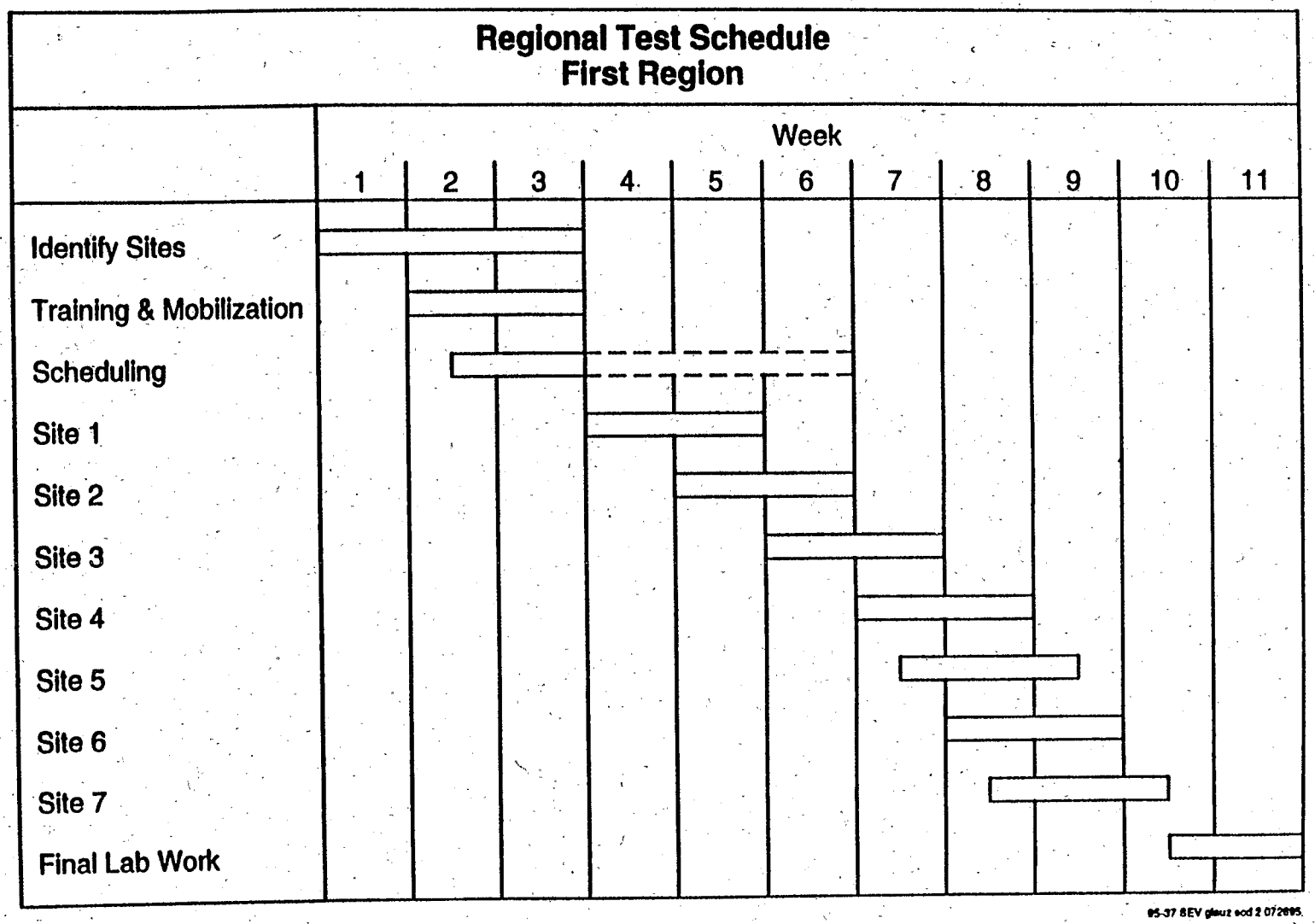

Figure 1-2. Tentative Schedule for Sites in the First Region

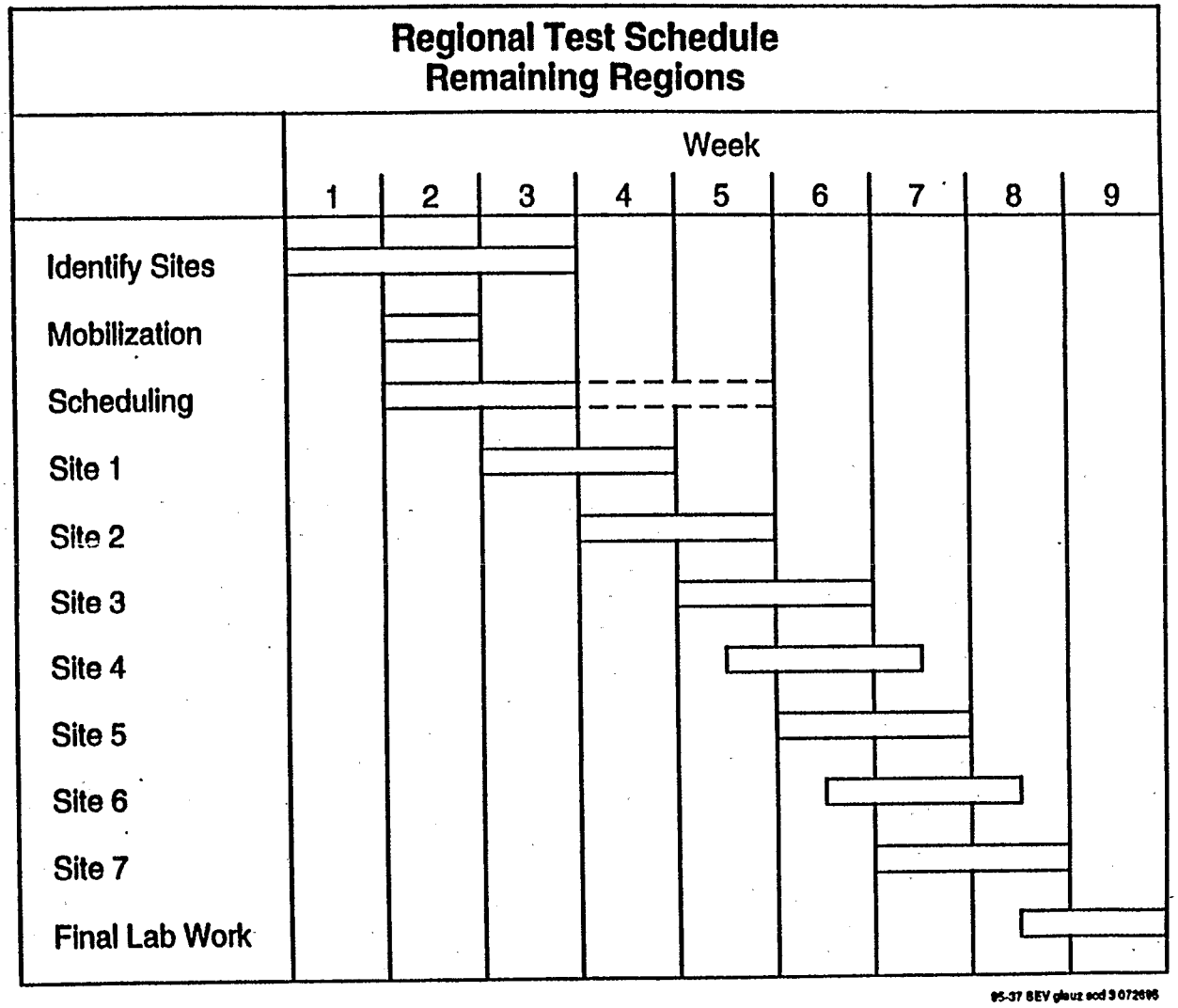

Figure 1-3. Tentative Schedule for Sites in the Remaining Four Regions

1.6.1 Site Schedule

Each of the 7 sites in a region will require approximately 10 working days to complete all field work by the vendors and the research team. It is assumed that each site contains 3 tanks. It also assumed that there are no *major* delays due to weather, schedule conflicts of the vendors or the hired construction contractors, etc. One slack day per site, shown as a make-up day, has been incorporated, however, to account for minor delays due to weather, schedule conflicts, etc. Pumping down of the tanks will be done by the tank owner/operator prior to conducting vendor tests. Preliminary purging may also have occurred, but additional purging will be needed for a few hours after the start. The following additional assumptions also control the schedule.

1.6.1.1 Modeling

It is assumed that the work of the vendors on site can be accomplished in 1 day. However, the data collection required by the vendor does not require access to the tank, per se, nor does it interfere with the work of the other vendors. Therefore, it can be done any time during the first week (before the tanks are excavated).

1.6.1.2 Ultrasonic

The vendor will require about a day at the site. However, this vendor and the remote video vendor could both be at the site the same day, testing on alternate tanks. Nevertheless, a total of 2 days for the two methods has been allocated.

1.6.1.3 Video

The vendor will require about a day at the site. However, this vendor and the robotic ultrasonic vendor could both be at the site the same day, testing on alternate tanks. Nevertheless, a total of 2 days for the two methods has been allocated.

1.6.1.4 Inspection

The internal inspection process involves making a small excavation to the top of the tank, opening the tank, cleaning the sludge from the bottom of the tank, and abrasive blasting the interior of the tank prior to inspection. It has been assumed that this work, along with the actual inspections, will require 3½ days. It is possible that the initial excavation and purging could be done on one tank while the others are still under test. Specific assumptions are as follows:

- Excavating about a 4-ft^2 hole to the top of each tank, cutting manways, and desludging the tanks should take about half a day each, but some work could start before the vendors are finished.

- Abrasive blasting will require about half a day per tank, but this work on one tank could be overlapped with the desludging of another tank.

- Internal inspection, including an ultrasonic survey, should require about half a day per tank. Again, this work could start as soon as one tank has been abrasive blasted; a half-day overlap between the preparatory work and the internal inspection on a site with 3 tanks has been assumed.

1.6.1.5 Baseline

A total of 4 days has been allotted to the baseline testing, including the necessary preliminary work. This preliminary work includes pulling the tanks, perhaps relocating the tanks, abrasive blasting the exterior of the tanks, and cutting open one end of each tank. Specific assumptions are as follows:

- Pulling of the tanks (and relocating them if necessary) should require 1 day, and is unlikely to be significantly overlapped with other activities.

- One-half day has been allocated to abrasive blasting the exterior of each tank and cutting an access opening in one end. It is possible that there could be some slight overlap of this and the actual baseline testing.

- One-half day has been allocated to conducting the baseline tests on each of the three tanks.

1.6.2 Regional Test Schedule for the First Region

It is assumed that the field work at the 7 sites in the first region will require 11 weeks of effort following approval of the QAPP. The primary assumptions deal with matters beyond the contractor's direct control. These are that EPA can identify the sites within 3 weeks, that the tank owners/operators can comply with the contractor's schedule, and that the vendors and construction subcontractors can comply with the contractor's schedule. The other assumptions are as follows.

1. Final safety and related training and mobilization will require approximately 2 weeks, and can occur simultaneously with EPA's efforts to line up sites.

2. Scheduling the sites, vendors, and construction subcontractors can start as soon as some of the sites are identified, and can continue after field work has started at some sites.

3. Each site requires 10 working days of field work. However, work can be staged, so that work can be ongoing at more than one site at a time. A 1-week overlap has been assumed for the first four sites, and a half-week overlap for the last three, as the various participants become more adept at their roles.

4. About a week and a half has been allocated to complete the lab work after all field work is completed.

1.6.3 Regional Test Schedule for the Remaining Regions

The assumptions made for the first region remain essentially valid for the remaining regions. However, because of the experience gained by the research team and the vendors in the first region, the work in each of the remaining regions can be conducted somewhat more expeditiously. It is estimated that work at the first site can begin after 2 weeks, even though all 7 sites may not yet have been selected. Work at the various sites can be overlapped somewhat more than in the first region. It is expected that field work in the remaining regions may proceed more rapidly than in the first region. As a result of all these assumptions, it is estimated all work at each remaining site can be completed in 9 weeks, compared with 11 weeks for the first region.

1.7 Project Organization and Responsibilities

The project organization and lines of authority and responsibility are presented in Figure 1-4. Ms. Carolyn Esposito (Telephone: (908) 906-6895) of the EPA NRMRL is the EPA Work Assignment Manager (WAM) and will oversee all activities conducted in this project. Ms. Esposito will review the draft QAPP, and review the final report to determine if the project objectives and QA requirements have been satisfactorily addressed. Mr. Guy Simes is the EPA Quality Assurance Officer (QAO). Guy Simes will review the QAPP or assign a designee to review the QAPP to ensure that all QA requirements have been satisfactorily addressed.

Mr. Robert Amick (Telephone: (513) 782-4759) is the IT Project Manager for this contract. Mr. Amick will provide overall review of the quality, budget, and timeliness of work conducted in this project. Ms. Janette Martin (Telephone: (513) 782-4956) is the IT Work Assignment Leader

(WAL) responsible for ensuring the completion of the project and for providing project status information to the EPA WAM. She has ultimate responsibility for ensuring project quality and timeliness. Mr. Tom Clark (513-782-4700) is the IT QAO for the Cincinnati office. He will monitor the project activities to ensure the proper conduct of analyses, data reduction, and data reporting. Mr. Dennis O'Conner, and members of a Work Group formed specifically for this Work Assignment, will provide expert technical expertise and oversight during this study.

Ms. Martin will be assisted in conducting the technical work by IT technical staff and personnel from IT's subcontractor, Midwest Research Institute (MRI). The MRI Project Manager, Dr. J.D. Flora (816-753-7600), is responsible for technical oversight of the work conducted by MRI and will report to the IT WAL. Ms. Carol Green (816-753-7600) is the MRI QAO. She will conduct or direct audits as required in the QAPP.

Communications during this project will be maintained through weekly telephone calls between the IT WAL and the MRI Project Manager, and the IT WAL and the EPA WAM. The IT Quality Assurance Officer and the Health and Safety Officer will be included in the calls and provide technical assistance as required during the project. If a serious problem arises, IT and MRI will immediately discuss the problem over the telephone, possible corrective actions will be discussed, and the selected actions will be carried out.

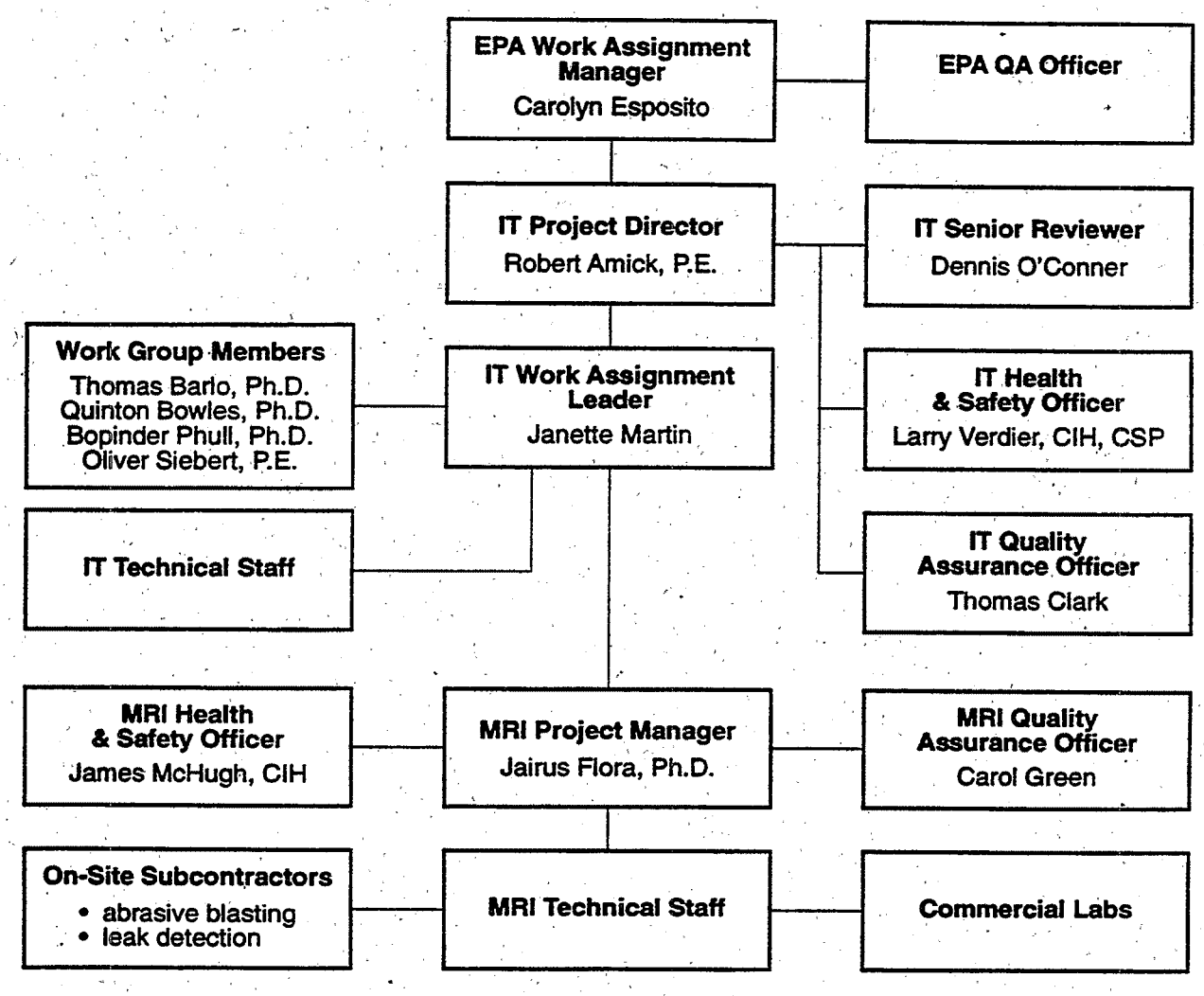

Figure 1-4. Project Organization.

SECTION 2.0
QUALITY ASSURANCE OBJECTIVES

2.1 Overall QA Objectives

The primary purpose of this study is to evaluate the performance of four different methods for determining the suitability of steel underground storage tanks for upgrading with cathodic protection. The findings of each tank assessment method will be compared with the results of baseline tests that determine the actual status of the tank.

The primary project objective is to estimate the proportion of correct decisions made by each vendor assessment method with a 95% confidence interval having a half-width of 0.15 or less.

For example, an estimated proportion of correct decisions of 0.85 with a 95% confidence interval of (0.78, 0.92) would meet this objective.

To do this, the following secondary objectives must be met:

- A statistically valid number of tanks must be tested. (See Subsection 1.5, Experimental Design.) For design purposes, 100 tanks are to be tested and between 45 and 55 of these tanks should be found to be suitable for upgrading by cathodic protection.

- Vendors must follow established protocols and procedures. (See Subsection 2.2, Evaluation and Documentation of Vendor Protocols and Procedures.)

- The data collected from each vendor method and the baseline tests for each tank and coupon must be thoroughly documented and sufficiently complete so that the conclusion reached may be reconstructed. (See Subsection 2.2.2, Documentation of Observed Procedures.)

- The precision of the baseline tests of the 5 deepest pit depths and the precision of the through-wall thickness measurements must be within specified criteria as proof of the reliability of the baseline tests. (See Table 2-2, Quantitative QA Objectives for Baseline Test Procedures.)

- Vendor results must be compared to the criteria for judging an underground storage tank to be acceptable for upgrading with cathodic protection. (See Subsection 2.2.3, Criteria for Upgrading.)

- Each tank must be classified according to its status for upgrading with cathodic protection as determined by the baseline tests and as reported by the vendor's assessment method. (See Table 1-2, Performance Measures for Assessment Methods.)

2.2 Documentation of Vendor Protocols and Procedures

Evaluation and documentation of vendors protocols and procedures are important to:

- Verify that the protocols and procedures are in compliance with applicable standards.
- Establish that vendor field crews both understand and follow the written protocols and procedures so that the data are properly evaluated, interpreted and archived.

2.2.1 Comparison of Vendor Protocols to Applicable Standards

Prior to participation of a vendor in this program, the vendor will submit a written protocol that describes the purpose and principles of the method. This document will generally also contain the following information:

1. Scope and applicability of the method
2. List of reference publications
3. Delineation of applicable permits and local approvals
4. Personnel training requirements
5. General safety requirements
6. Step-by-step procedures
7. Methodology for inspection and compliance to specifications

The contractor will review the vendor's protocol and compare it to any consensus standards such as those of the American Petroleum Institute (API), American Society for Testing and Materials (ASTM), American Society of Mechanical Engineers (ASME), Underwriters Laboratory (UL), and EPA Federal Register, and will make an engineering judgment that the protocol meets any appropriate and minimal standard, and/or note any discerned deficiency.

2.2.2 Documentation of Observed Procedures

Prior to the observation of the vendors' operations the contractor will devise a check list of the step-by-step procedures as delineated in the vendor's protocol. The ~~vendor~~ MRI/IT Team will keep a log of the observed procedures for comparison with the protocol. In addition to this check list, the contractor will note any other information deemed pertinent. As an example, note will be made of the type and

model of equipment/instrumentation utilized, abrasive material and specifications used during abrasive blasting, maintenance and/or calibration of equipment, adequacy of data obtained, and record keeping.

For each vendor's operation the contractor will provide a succinct summary providing conclusions and recommendations.

2.3 Criteria for Upgrading

There is currently no single standard criterion for judging an underground storage tank to be acceptable for upgrading by the addition of cathodic protection. Consequently, the determination of the acceptability of a tank for upgrading based on the baseline tests will be made using four different criteria. These are listed below. Both forms of the vendor's conclusions will be compared to each of these four criteria and the results summarized.

Criterion 1: To be considered upgradable by cathodic protection, the tank must be free of corrosion holes. Any perforation of the tank shell that is found in the baseline tests will disqualify that tank. Otherwise, if no perforations exist, the tank will be deemed suitable. (This requirement is specified in the Federal Regulations.)

Criterion 2: To be considered upgradable by cathodic protection the tank must be free of corrosion holes and the vertical and horizontal diameters of the tank may not differ by more than 2%. (If the diameters differ by more than 2% the tank would be judged to be structurally unsound.)

Criterion 3: A tank will be deemed suitable for upgrading with cathodic protection if (a) there are no pits deeper than 0.5 times the required minimum wall thickness and (b) the average wall thickness in each 3 ft by 3 ft area is at least 85% of the required minimum wall thickness. A tank is unsuitable if either (a) or (b) is not met. The required minimum wall thickness varies with the size of the tank, but is generally 0.240 in. Note: Requirement (a) implies that there can be no perforations.

Criterion 4: To be considered upgradable by cathodic protection the tank must be free of corrosion holes and no cracks or separations in the tank welds (or elsewhere) are observed visually after abrasive blasting.

2.4 Quantitative QA Objectives

For the vendor tests, only completeness objectives can be established. For the baseline tests, both precision and completeness objectives have been established for the tanks and any coupons cut

from a tank. A location grid is used to document the position of the measurements and various features. Completeness objectives for the four vendor tests are provided in Table 2-1. Objectives for the baseline tests are provided in Table 2-2.

Table 1-2 classifies the tanks by the vendor's results and the actual tank condition. The cells where the vendor's result agrees with the actual condition are correct decisions, while those where the results disagree represent errors.

- A **correct decision** occurs if a vendor's result agrees with the baseline finding about the tank's suitability for upgrading with cathodic protection.
- A **false alarm** occurs if a vendor's result fails a tank that is suitable for upgrading (by cathodic protection).
- A **correct detection** occurs if a vendor's result fails a tank that is not suitable for upgrading.
- A **missed detection** occurs if a vendor's result indicates that a tank is suitable for upgrading, when, in fact, its actual condition does not qualify it for upgrading.
- A **correct approval** occurs if the vendor's result approves a tank for upgrading and the tank is actually suitable for upgrading.

Table 2-1. Completeness Objectives for Vendor Tests

Type of test	Subject	Completeness (%)
Modeling	Data, measurements, records, conclusions, reason for failing	100
Video	Data, measurements, records, conclusions, reason for failing	100
Ultrasonic	Data, measurements, records, conclusions, reasons for failing	100
Inspection	Data, measurements, records, conclusions, reasons for failing	100

Table 2-2. Quantitative QA Objectives for Baseline Test Procedures

Critical measurement	Equipment	Sensitivity and Reporting units (in)	Precision (in)	Completeness (%)
Pit Depth	Depth Gauge Micrometer Model 449AZ-3R, L.S. Starrett Company	0.001	0.01	100
Wall thickness	Ultrasonic Thickness Gauge Model DM4DL, Krautkramer Branson Company using a 0.38 in transducer and EXOSEN 30 couplant	0.001	NA	100
Wall Thickness through 5/8" sentry holes (for nominal quarter in steel tank)	Throughwall Micrometer, Inspectors Micrometer Model 175RLZ, L.S. Starrett Company)	0.001	0.01	100
Pit Diameters (maximum and minimum if not circular)	Ruler (common source)	0.0625	NA	100
Location by grid system	Tape measure (common source)	0.5	NA	100
Tank diameter	Tape measure or tank gauge stick (common source)	~~0.0625~~ 1/8"	NA	100

NA = Not Applicable

For this study, the accuracy of a tank assessment method is defined as the probability that the method correctly determines that a tank is suitable for upgrading with cathodic protection. The reliability of a tank assessment method is defined as the probability that the method correctly identifies a tank that is unsuitable for upgrading with cathodic protection. Thus, among tanks suitable for upgrading, the proportion of tanks correctly passed and incorrectly failed by each assessment method must be estimated. Naturally the sum of these two proportions is 100%. Similarly, among tanks not suitable for upgrading, the proportion of missed detections and correct detections must be estimated for each assessment method. Again, these two proportions add to 100%.

A measure of performance of an assessment method, combining both aspects of performance, is the **overall correct rate** of an assessment method. The overall correct rate is the proportion of tests in the upper left cell and the lower right cell of Table 1-2 among all tests. The complement of this is the proportion of incorrect decisions among all tests.

The goal is to estimate the vendor's overall correct rate to within ±0.15 with 95% confidence. In addition, the performance measures in Table 1-2 will be estimated to within ± 0.15 with 95% confidence. This is referred to as the 95% confidence interval for the proportion having a half-width of 0.15 or less. For example, for a false alarm rate of 50%, it will be possible to estimate the False Alarm Rate of 0.5 ± 0.15 (or 50% ± 15%) with 95% confidence. The confidence interval will be smaller for values of the proportion close to zero or one.

In order to estimate these proportions, the study must contain both tanks suitable for upgrading and unsuitable for upgrading. If the numbers of suitable and unsuitable tanks in the study are equal, the estimation of the two error rates would be based on the same sample sizes and so be of about equal precision. However, since the actual condition of the tanks in the study will not be known until the baseline tests have been run, these sample sizes cannot be chosen in advance.

The number of tanks to be used in the study was chosen to provide the required amount of data to estimate these proportions with the stated confidence and length of the confidence interval. Assuming that approximately half of the tanks are found to be suitable for upgrading by the baseline tests, the denominator for estimating the probability of false alarm (PFA) and the probability of

detection (PD) will each be approximately 50. The maximum width of the confidence interval would occur if the estimated proportion is 0.5. Using the normal approximation to the binomial, the half-width of the confidence interval in this case is

$$W=1.96\sqrt{(0.5)^2/n}$$

where the number 1.96 came from the normal distribution for a two-sided 95% confidence interval. If W is specified as 0.15, this equation can be solved for n to yield 43. Thus, the total sample size of 100 tanks, which is expected to provide about 50 tanks suitable for upgrading and 50 that are not suitable for upgrading, should be sufficient to meet this objective.

It should be noted that if the methods actually produce a relatively small false alarm rate and a high rate of detection, then the width of the confidence intervals will actually be shorter than the worst case used for estimating the sample size.

2.5 Qualitative QA Objectives

Comparability of data will be assured by use of the same brand of equipment by all of the baseline field crew members. In addition, all baseline field crew personnel will be proficient in the measuring and recording methods using the equipment.

2.6 What If QA Objectives Are Not Met

The primary QA objective would not be met if the proportion of tanks found suitable for upgrading differs substantially from 50%, this will affect the estimates of some of the performance parameters. In the most extreme case, if no suitable tanks were found, the study would be unable to estimate the correct approval rate (the proportion of suitable tanks correctly identified by each assessment method). This extreme case is unlikely. If, say, the suitable group is much smaller than the unsuitable group, then the confidence interval for the correct approval rate would be larger than expected. The confidence interval for the correct detection (of unsuitable tanks) would be shorter than expected. The confidence interval for the overall correct rate would not be affected, although it would be based on a slightly different combination of correct approvals and correct detections.

Other QA objectives would not be met, for instance, if triplicate measurements of pit depth did not meet the precision objectives. This would reduce the statistical confidence level of the study and possibly cast doubt on the conclusions reached concerning the tank. An overall outcome would be a weaker study with the possibility of the study gaining less acceptance from industry and regulators.

SECTION 3.0
SITE SELECTION AND SAMPLING PROCEDURES

3.1 Site Selection

Tanks will be selected by the contractor from an EPA list of a tank population provided by the industrial and corporate community. Ideally, approximately half of the tanks selected will be suitable for upgrading and half will not. The owner/operator of the tank will be asked to provide information regarding the condition of the tank. Definitive data regarding whether a tank is suitable for upgrading will not be known in advance. Therefore, information provided by the owner/operator (such as leak detection results, age, etc.) will be used to determine the approximate condition of the tank.

Steel tanks that have not been cathodically protected or lined will be selected to provide a population encompassing a wide range of tank conditions including:

- Leaking tanks (tanks that have failed a leak-detection test)
- Nonleaking tanks (tanks that have passed a leak-detection test)
- Tanks of unknown condition
- Tanks in a variety of geographic locations

3.2 Sampling Locations

With regard to sampling strategy, results of vendor reports will be used to help identify areas for conducting baseline tests. The tank will have a grid system applied, with each grid being approximately 9 ft^2. See Appendix B for a figure showing the sampling grid numbering pattern scheme to be used for all tanks. All grids will receive ultrasonic measurements. Lacking indications of problem areas, randomly selected areas will be chosen for additional testing. The random selection will be stratified to include areas known to be problematic (i.e., beneath the fill pipe, top of tank, bottom of tank, etc.). Baseline testing will consist of axis measurements, pit depth, wall thickness and pit diameter measurements.

A minimum of one and a maximum of five pit depth measurements will be made in each grid of the tank on the exterior (if pits of apparent depth of least 0.05 in. are visually detected). On the

interior of the tank a minimum of one and a maximum of five pit depth measurements will be made on each grid of the tank for which pits of apparent depth at least 0.05 in. are visually detected. Triplicate measurements will be made of the five deepest pit measurements for each tank. The average and standard deviation of the pit depth for each of these five pits will be calculated.

Pit diameters of at least 0.125 in will be measured at the place on the inside of the tank farthest from the remote video camera location. If the pit diameters on the surface furthest from the point of access for the video camera are near 0.125 in, the field team will have the pit diameter measured by two persons to confirm that the diameter either exceeds or is less than 0.125 in. If pit diameters are substantially larger than 0.125 in, a single measurement will suffice. Pit depth (inside or outside) and pit diameter (inside) are not necessarily measured on the same pit.

Ultrasonic tests of wall thickness will be made at the approximate center of each grid. For any grid in which a thickness reading less than 90% of the minimum required wall thickness as specified in UL 58 is obtained, the grid will be subdivided into nine smaller grids and readings will be taken from each subsection.

In addition, approximately 1-ft^2 coupons will be cut using a cutting torch from tanks which have passed all on-site tests. Areas for sampling coupons will be selected by searching for areas of greatest corrosion potential or observed corrosion and two coupons will be cut for each tank. Coupons will be labeled according to the scheme described in Subsection 3.5, Sample Custody.

3.3 Baseline Testing

The baseline tests listed below will be performed. Appendix B provides field procedures and forms for the baseline tests. The number of measurements of each type will be a function of the tank size. Table 3-1 provides the approximate number of measurements of each type for a nominal 8000 gallon tank that is 8 ft in diameter and 21 ft long. The contractor's field crews may increase the number of measurements based on observations and judgement if it appears that this would give a more complete determination of the tank condition. Such a tank would have a grid with 66 locations consisting of 8 sections around the circumference and 7 sections along the length of the cylinder plus 5 sections on each end consisting of a center circle and 4 sections around the outside of the central circle.

Table 3-1. Number of Measurements

Measurement Type	Number[a]
Ultrasonic Wall Thickness	66
Pit Depth Gauge[b]	162 - 690
Pit Diameter[c]	10
Tank Diameter	2
Through-wall micrometer wall thickness	2

(a) Based on a nominal 8000 gallon tank, 8 ft. diameter and 21 ft. long

(b) Minimum number based on one pit depth measurement per grid square (66) plus triplicate measurement of 5 deepest pits (15) for both interior and exterior. Maximum number based on five pit depth measurements per grid square (330) plus triplicate measurements of 5 deepest pits (15) for both interior and exterior. Actual number may vary depending on number of pits observed.

c Up to ten pit diameters will be measured; actual number may vary depending on number and size of pits observed.

1. Prior to excavation and removal of the tank, axis measurements will be made with a tape measure or tank gauge stick to document the vertical diameter of the tank. This checks for the tank's "out of roundness" due to deformation and gives a gross indication of tank condition.

   The vertical diameter will be measured at the fill pipe from outside the tank while it is still in the ground and this measurement recorded. After the tank has been removed and an access hole cut in one end, the internal vertical diameter at the same location will be measured. If this measurement agrees with the original measurement to within 0.5 in, no substantial deformation occurred during removal. In this case, the horizontal diameter at that location will be measured. If the difference between the original vertical diameter measured before removal and the horizontal diameter is more than 2% of the average of these two diameters, the tank will be judged to be structurally deformed.
   If the original vertical diameter measured before removal differs more than 0.5 in from that measured after the tank is out of the ground, internal vertical and horizontal diameters will be measured at each end (where the end caps provide additional strength and would not deform). The average of these four diameter measurements is used as the original diameter of the tank. If the original vertical diameter measured

before removal differs from this average diameter by more than 2%, the tank will be judged to be structurally deformed.

2. The tank will be excavated and removed by the tank owner or their subcontractor. The contractor's field crew will hose down the tank or carefully brush away loose soil. The tank will have a 3 ft by 3 ft grid pattern applied to the exterior using a combination of chalk lines and wax markers. The grid will be applied in the following manner:

   - The length of the tank in feet will define the number of horizontal grid sections, which run longitudinally along the cylinder of the tank.
   - The circumference of the tank will be divided into as many equal segments as the tank diameter in feet.
   - Starting at the opened end of the cylinder, marks will be made every 3 ft for a circumferential grid line. This provides the grid of the cylindrical surface. Each end will have a center circle of 9 ft^2 area defined (a radius 20.375 in).
   - The remaining area will be divided into equal segments of about 9 ft^2 each. For example, an 8-ft diameter tank has about 45 ft^2 of surface on each end.
   - Appendix B contains a figure showing the sampling grid numbering pattern scheme to be used for all tanks.

3. A visual inspection of the exterior of the tank will be conducted after the grid has been applied. The purpose of the inspection is to detect surface discontinuities such as cracks, holes, pits, general corrosion, and other porosities in the tank. A data form will be provided for documentation of the visual inspection. This inspection and other visual inspections of the interior and exterior will follow the procedure provided in Appendix B. The type of examination is a direct visual examination. The written procedure for this is provided in Appendix B and calls for viewing the entire surface with the human eye at a light level of at least 161 lumen/m^2 from a distance of no more than 24 in. A magnifying glass will be used to observe questionable areas.

   Still photography using a 35 mm camera with color film will be used to document the tank condition. Areas of discoloration, apparent corrosion, exterior evidence of petroleum product, or obvious holes will be identified and referenced. Special attention will be paid to the bottom of the tank and to the lower weld seams as well as to bungs, fittings, and connections. If any rust plugs are identified, simple means of extracting them will be made, such as with a screwdriver or hammer.

4. The exterior of the tank will be abrasive blasted to bare metal (NACE 2 or SSPC-SP10) and the grid will be reapplied. A second visual inspection of the tank exterior will be conducted. This will be accompanied by still photography to document the tank condition.

In making the baseline visual observations, the field personnel will characterize any apparent corrosion according to the following descriptions:

- Note presence, location, and approximate size of any perforations
- Provide an estimate of the nature and approximate percentage of area within each grid location of a given type of corrosion
- Note the presence, nature, and approximate density of shallow pits, subjectively judged to be <0.05 in deep
- Note the presence, nature, and approximate density of deep pits subjectively judged to be 0.05 to 0.10 in deep
- Note the presence, nature, and approximate density of very deep pits subjectively judged to be > 0.10 in deep
- Note the corrosion pattern, i.e., pits widely dispersed, isolated, overlapping, or in line
- Note an association of pitting with tank geometry or structural features, e.g., top of tank, bottom of tank, under a gauge sticking port, at an apparent sludge line or ullage line, or associated with a weld, bend, or other stress risers
- Note surface conditions such as general roughness, evidence of coating, rust plugs, tubercles, and scale
- Provide a characterization of corrosion product including color, loose or tightly adhering, soft or hard, wet or dry, and any distinctive smell such as that of hydrogen sulfide
- Provide a characterization of pits as concave and hemispherical, elongated, vertical sides, undercutting, subsurface, narrow and deep, or horizontal tunneling.

Particular attention will be paid to those areas identified in the initial inspection and to problem areas not earlier evident but made visible by the abrasive blasting. These problem areas will be documented.

5. The end of the tank that was closest to the placement of the internal video camera location will have an entry hole cut in it and the interior will have a grid applied as previously described. The interior of the tank will have been abrasive blasted to bare metal during the vendor assessment tests. A visual inspection of the interior of the tank will be conducted. This will be accompanied by still photography to document the tank condition. Areas of discoloration, apparent corrosion, or obvious holes will be identified and referenced for specific area testing.

6. Ultrasonic measurements will be conducted to determine wall thickness. This testing will be done primarily from the inside of the tank, but may also be done from the outside. If areas of the inside are pitted or rough to the extent that the ultrasonic instrument does not indicate a satisfactory coupling with the surface, the measurement will be taken from the outside.

   Each 3 ft by 3 ft area will be defined by the grid reference system for that tank described in Section 3.5. An ultrasonic test of the wall thickness will be made at the approximate center of each marked grid. The minimum required original wall thickness for each tank will be determined by the tank size in accordance with UL 58. The thickness varies with tankage volume. Typically, the minimum required wall thickness is expected to be 0.240 in for a tank with a nominal wall thickness of 0.25 in.

   Any grid section in which an ultrasonic thickness reading less than 90% of the minimum required wall thickness was obtained will be subdivided into nine smaller grids. Then, a reading will be taken from each subsection. The average of these nine readings will be taken as the average wall thickness of that section. The field crews may elect to take additional ultrasonic readings in any grid section based on their observations and judgement. All readings taken in a grid section will be averaged for the average wall thickness of that section.

7. Areas of the tank wall identified as likely to be thin will be marked. A portion of these areas, to include the suspected thinnest wall sections, will be subjected to direct physical measurement. This will be accomplished by drilling sentry holes through the tank wall of 0.625 in diameter (for nominal wall thickness of 0.25 in) to accept a thickness gauge or micrometer. Burrs will be removed from the drilling by filing or grinding. A micrometer will then be inserted through the hole and the thickness measured directly. Duplicate wall thickness measurements will be made through the sentry holes. If the ultrasonic measurement indicates that the wall thickness is less

than 90% of the required minimum wall thickness, up to 5 direct thickness measurements will be made using sentry holes to confirm the ultrasonic readings.

8. For each 3 ft by 3 ft grid area of the interior and exterior of the tank that has one or more pits that are visually judged to be 0.05 in deep or more, at least one pit depth measurement will be taken with a depth micrometer and recorded. After these measurements have been completed, the five deepest pits will be measured two more times, giving triplicate measurements. For these 5 deepest pits, a measurement of the remaining wall thickness will be attempted using the ultrasonic instrument from the side opposite the pit. The ultrasonic instrument will be set in a mode to store the minimum thickness measured, and then used to scan across the area of the pit from the opposite side of the tank wall.

   In cases where the pit depth of the deepest pits cannot be accurately measured with a depth micrometer (for example, the pit is on the curved section of the end wall where it is welded to the cylindrical portion of the tank, or the pit in question is surrounded by other pits or areas of severe corrosion such that the depth gauge has no good bearing surface), the pit depth must be measured by other methods. At least two of the following methods will be attempted:

   a. Taking an ultrasonic measurement of the remaining wall thickness.

   b. Drilling a sentry hole next to the pit and using a throughwall micrometer.

   c. Cutting a coupon containing the pit from the tank and sending it to a laboratory for sectioning and photomicrographing (see following discussion).

   In cases where the deepest pits are in an area of overlapping pits, so that the original surface does not remain, the remaining wall thickness will be subtracted from the required minimum wall thickness to give a depth. If the apparent original wall thickness of the tank can be determined from a relatively uncorroded section of the tank and if it exceeds the minimum wall thickness, the remaining wall thickness of the pits will be subtracted from this value to give a determination of pit depth.

9. In cases where no perforations were found in the tank shell, coupon samples for laboratory analysis will be taken. At least two coupons, measuring approximately 12 x 12 in, will be identified by the field crew and cut from the tank by the tank removal subcontractor using a cutting torch. In all cases, the feature of interest will be at least 2 in. from the edge of the coupon to avoid any effect from cutting the coupon. One coupon will be taken from the tank wall area that had the least wall thickness as measured by the ultrasonic instrument. The second coupon will be taken from the area that had the most severe corrosion in the opinion of the field crew

based on the visual inspection. For example, this might be an area of overlapping pits on the exterior or an area along the bottom that had many small pits with apparent or possible undercutting. Examples calling for additional coupons may be taken at the discretion of the field crew. Examples calling for additional coupons would include but not be limited to corrosion along a weld, an apparent crack in a weld, two distinct areas with different types of corrosion such as overlapping pits on the outside and intergranular corrosion on the inside, or a deep pit whose depth could not be measured satisfactorily by other methods.

The coupons will be permanently marked in the field for identification. Coupons containing suspected weld cracks will be taken to H.R. Inspection Service, a commercial laboratory in the Kansas City area, for radiography testing. See Appendix A for the Radiographic Testing Procedure.

All coupons will be photographed at MRI, with marking applied to show the location of interest. They will be subjected to wall thickness measurements by ultrasonic and/or micrometer as well as pit depth measurements. If these measurements are not definitive and if additional data are needed to classify the tank according to the criteria in Section 2.3, smaller sections that contain the area(s) of interest will be cut from the coupons at MRI. These smaller sections, along with copies of the MRI photographs, will then be sent to Sherry Labs Oklahoma in Tulsa, Oklahoma for sectioning and mounting. Photomicrographs will be taken by that lab and returned along with the mounted specimens to MRI for definitive measurements of the wall thickness, pit depth, and weld cracking.

3.4 Sampling Equipment

Sampling equipment to be used for the baseline tests includes: drill with 5/8" bit (for sentry holes), tape measure, chalk line, and wax marker (for gridding). All other equipment are for measurements. Abrasive blasting equipment and an acetylene torch for cutting coupons will be supplied by the tank contractor on site.

3.5 Sample Custody

The five regions will be assigned numbers as follows:

R1 Midwest
R2 Northwest
R3 Southwest
R4 Southeast
R5 Northeast

Within each region, sites will be assigned numbers sequentially once the list of tanks and sites has been identified. At each site, tanks will be assigned sequential numbers and identified by location and size on a sketch of the site. Once a tank has had its grid marked on it, each grid section will be identified by a letter and number as described in Appendix B, and within each grid section, each square foot will have a number from 1 to 9 assigned to it. Thus, each tank can be identified by the region, site, and tank number; e.g., R1, S2, T1 would denote tank 1 at site 2 in region 1 (midwest). A location on that tank would be identified by a sequence of a letter and two numbers; e.g., D-5-4 would denote square foot number 4 in the grid section that begins 15 ft from the opened end of the tank at position D around the circumference. This location scheme will be used to mark the coupons to be cut from the tank.

Sample coupons will be initially marked with chalk and engraved or punched on their surface prior to leaving the site in order to provide permanent identification. Coupon History Forms will be provided to document sample collection and sample history for each coupon taken at each site. Figure 3-1 provides an example of a Coupon History Form. Coupons and forms will then be packaged and shipped according to DOT regulations.

The field crew chief will be responsible for samples during field sampling. Responsibilities will include labeling samples and preparation of the sample documentation form. Samples will be permanently marked by engraving or punching in the field and shipped to MRI. A sample history form (Figure 3-1) will be prepared for each set of samples (one site's samples) and will travel with the sample set as it is moved about for testing and analysis.

Each time a sample set begins to undergo testing, the sample history form will be reviewed and samples checked for correctness and completeness. If problems with a sample set are discovered (such as missing or incorrect samples) the nature of the problem will be noted on the sample history form and reported immediately to the MRI Project Manager and MRI QAO.

Figure 3-1. Coupon History Form

COUPON NUMBER	REGION	SITE	TANK	COLLECTED BY	DATE COLLECTED	RECEIVED BY	DATE RECEIVED

SECTION 4.0

ANALYTICAL PROCEDURES AND CALIBRATION

4.1 EPA-Approved or Other Validated Standard Methods

The vendor methods are attached in Appendix C. The three new vendor methods (i.e., modeling, video, ultrasonic) are adapted from ASTM ES40-94. The internal inspection method is adapted from API 1631, NLPA 631, or NLPA 632.

The baseline method has been summarized in Subsection 3.3. The baseline method consists of visual inspections of the interior and exterior, depth, width, and thickness measurements, evaluation of the type of corrosion, and the pit depth tests described in Subsection 3.3. The critical measurement, type of measurement, and type of equipment used for the baseline tests are shown below in Table 4-1.

4.1 Calibration

The depth micrometer will be calibrated at the beginning and end of measurements for each tank and the zero readings reported. The average will be used to correct all readings for accuracy.

The through-wall micrometer will be calibrated at the beginning and end of measurements for each tank and the zero readings reported. These will be used to correct the readings.

The ultrasonic gauge calibration will be checked upon instrument power-up and prior to beginning each series of readings on each tank and its value recorded. If the calibration value is off by more than 5%, a two-point calibration will be done to calibrate the instrument. The calibration checks will be recorded by the field crew and reviewed at the data reduction stage. The calibration of the ultrasonic gauge will also be checked on a portion of the tank that appears to have little or no corrosion. A measurement of wall thickness on such an area will be made with the through-wall micrometer using an edge or a sentry hole and also with the ultrasonic gauge. The two readings will be compared and must agree to within $\pm$.01 in. This will ensure that the steel of the tank is not appreciably different from that of the calibration block.

Table 4-1. Measurement, Type, and Equipment for Baseline Testing of Tanks and Coupons

Critical Measurement and Type	Equipment
Pit depth (distance)	Depth Gauge Micrometer
Wall thickness (distance)	Ultrasonic Thickness Gauge
Wall Thickness through 0.625 in sentry holes (distance)	Throughwall Micrometer
Pit diameter (distance)	Ruler
Location by grid system (distance)	Tape measure
Tank diameter (distance)	Tape measure or tank gauge stick

The baseline methods and forms are provided in Appendix B.

The calibration frequency and requirements are summarized in Table 4-2. The micrometers will be checked before and after making measurements on each tank and the zero readings recorded. The ultrasonic calibration will be checked on the 0.25-in standard before beginning a series of readings. If it is more than 5% different from the standard, a two point calibration of the instrument will be done and the calibration re-checked. The calibration reading will be reported.

Table 4-2. Scheduled Baseline Test Calibrations

Equipment	Frequency	Acceptance criteria	Corrective action
Depth Micrometer	At the beginning and end of measurements for each tank	< 0.01 in	If zero < 0.01, record and correct all readings; if greater than 0.01 adjust zero.
Through-wall micrometer	At the beginning and end of measurements for each tank	< 0.01 in	If zero < 0.01, record and correct all readings; if greater than 0.01 adjust zero.
Ultrasonic	Prior to measuring each tank	< 5% relative to NIST traceable standard 0.25 in < ± 0.01 in compared to through-wall micrometer	Record calibration value. If greater than 5%, recalibrate with 2 point calibration and re-check. Recalibrate to match micrometer and re-check on NIST calibration block.

SECTION 5.0

DATA REDUCTION, VALIDATION AND REPORTING

5.1 Data Reduction

The vendors are responsible for data reduction of their tests.

The MRI Project Manager is responsible for data reduction of the baseline tests. There are four primary measurements to be made on each tank during the baseline test: tank diameter, pit depth, pit diameter, and wall thickness.

For baseline tests each tank will be inspected for penetration and if any holes are found, the presence, location, and approximate diameter of holes will be noted. The qualitative assessment of corrosion on each 3 ft by 3 ft area of tank wall surface that is made as part of the visual inspection will be reduced by providing a textual statement summarizing the condition of the tank in terms of the amount and type of corrosion identified during the visual inspection.

The pit depth data will be reduced by reporting the maximum pit depth found for each tank. If a tank has a corrosion hole, this will be deemed a pit completely through the tank wall thickness and will be noted as a hole, with a numerical value that is the larger of the nominal wall thickness (usually 0.25 in) or the largest wall thickness measurement observed on that tank. If a tank has a hole, the deepest nonpenetrating pit depth will also be reported.

The five deepest non-perforating pits will be measured ultrasonically from the side opposite the pit to measure the remaining wall thickness. The minimum wall thickness found in the area of the pit will be used as the remaining wall thickness at the pit. This value will be subtracted from the larger of the measured remaining wall thickness in the area of the pit and the required minimum wall thickness (typically 0.240 in) to give another measure of pit depth. This will be compared to the pit depth measured by the depth micrometer and the larger value used to report the maximum pit depth. This maximum will be reported as a percent of the required minimum wall thickness as well as in the directly measured units.

The diameters of several pits, if any, on the interior surface of each tank at the maximum distance from the internal video camera will be measured. Typically this surface will be the circular end of the tank, which will generally be 8 ft in diameter. These data will be summarized by

reporting whether any pits on that surface were found that were 0.125 in. in diameter or larger and whether the internal video inspection identified them or not. While this is not a criterion for determining whether the tank is suitable for upgrading, it is a requirement stated in ASTM ES 40-94 for the video inspection method.

The precision estimates of the triplicate determinations of pit depths for the 5 deepest pits and the duplicate measurements of the wall thicknesses using the through wall micrometer will be calculated and reported as standard deviations. The formula for precision calculations is provided in Section 8.

The ultrasonic thickness measurements from each 3 ft by 3 ft area of tank surface will be averaged using the arithmetic mean to provide an average wall thickness for the shell of the tank. Any 3 ft by 3 ft section that is found to have a thickness measurement less than 90% of the required minimum wall thickness will have the average of the 9 measurements of wall thickness for that 3 ft by 3 ft area reported separately. The location of that section will be identified by its grid reference and reported.

For each criterion for accepting a tank for upgrading, the performance measures described in Section 2.0 will be calculated for each tank assessment method. A confidence interval for each estimated proportion will be calculated and reported. If the sample size available to estimate the proportion is sufficiently large, the normal approximation to the binomial will be used to calculate the confidence interval. If the sample size is too small or the proportion is small, exact confidence intervals based on the binomial distribution will be used. Formulas for these calculations are provided below.

The 95% confidence intervals for the performance measures will be calculated using the binomial distribution. Each performance measure will be estimated as the observed proportion of tanks that were classified by the vendor in a particular category. For example, suppose that the baseline method determined that 50 tanks were suitable for upgrading. Each vendor's probability of false alarm would be estimated as the proportion of those 50 tanks that the vendor concluded were not suitable for upgrading. Let

Y_i = 0 if a vendor determined that the I-th tank was suitable for upgrading.

Y_i = 1 if a vendor determined that the I-th tank was not suitable for upgrading.

Let

N_s = the number of tanks determined by the baseline to be suitable for upgrading.

Then the probability of false alarm, PFA, is estimated as

$$PFA = \sum Y_i / N_s$$

The 95% confidence interval for PFA will be calculated using the binomial distribution. If both

$$N_u = \sum Y_i$$

and

$$N_v = N_S - N_u$$

are both at least 5 or more, the normal approximation to the binomial will be used to calculate the confidence interval.

That is, the confidence interval for PFA will be given by

$$PFA \pm 1.96\sqrt{PFA(1-PFA)/N_s}$$

If the requirements for using the normal approximation to the binomial are not met, then exact binomial confidence limits will be calculated. Denote the cumulative binomial distribution by

$$Bi(n,p;y) = \sum ({}_nC_x) p^x (1-p)^{(n-x)}$$

where the summation is on x from 0 to y, the observed number of events. In the equation ${}_nC_x$ stands for the combinatorial number of ways to choose x items from n items. That is

${}_nC_x = n!/[x!(n-x)!]$

Then the lower confidence limit is found by solving the equation

$1 - Bi(n,p_a;y-1) = \alpha/2$

for p_a. Generally the solution must be found iteratively The upper confidence limit is found by solving the equation

$$Bi(n,p_b;y) = \alpha/2$$

for p_b, where again the solution must generally be found interactively. The result is a two-sided confidence interval with confidence coefficient 100%(1-α). In this example the number of events, y, is the

$$y = \sum Y_i$$

where the Y_i were defined above. These formulas can be used to calculate the confidence intervals for each of the estimated proportions in the performance parameters.

5.2 Data Validation

The MRI Project Manager will be responsible for ensuring that validation checks are done on the data reported. All raw data, including calibration and precision data, and calculated data will be examined for completeness and compliance to all requirements and objectives. The calculated data will be examined for accuracy. Any assumptions will be examined for reasonableness. Any data affected by problems will be flagged in the records and in the report as follows:

C (did not meet calibration requirements)

P (did not meet precision requirements)

T (did not meet completeness requirements)

X (did not meet compliance requirements; i.e., did not follow test protocol/procedures or documentation requirements)

5.3 Data Reporting

The results of the vendor tests will be supplied to MRI in reports. Calibration, quality control checks, calculations, assumptions, and evaluation will be documented and retained in the project files. The field crew leader will be responsible for preparing a data report containing the data recorded on each tank. The Project Manager will be responsible for preparing the final report. The data reported will include those shown previously in Table 1-1. All baseline data for pit depth, pit diameter, and wall thickness will be reported in inches.

The conclusions of each assessment method will be presented in the report as shown below (where $n_{..}$ is planned to be 100):

Table 5-1. Conclusions of Each Vendor Assessment Method

	VENDOR RESULT			
BASELINE	SUITABLE	UNSUITABLE	INCONCLUSIVE	
SUITABLE	n_{11}	n_{12}	n_{13}	$n_{1.}$
UNSUITABLE	n_{21}	n_{22}	n_{23}	$n_{2.}$
	$n_{.1}$	$n_{.2}$	$n_{.3}$	$n_{..}$

Such a table will be prepared for each of the four criteria listed in Section 2.3 and for both versions of the vendor's conclusions (i.e. with and without knowledge of the results of the leak test).

To illustrate how the performance parameters are determined, assume a vendor produces the data shown in Table 5-2, as compared to one of the evaluation criteria (e.g., presence or absence of penetrations found in the tanks).

Table 5-2. Sample Data

	VENDOR RESULT			
BASELINE	SUITABLE	UNSUITABLE	INCONCLUSIVE	
SUITABLE	45	5	5	55
UNSUITABLE	8	31	6	45
	53	36	11	100

With these data, the following can be calculated:

Correct Decision Rate

$= (n_{11} + n_{22})/n_{..}$

$= 76/100 = 0.76 \pm 0.084$

Proportion of Correct Approval (Accuracy)

$= n_{11}/n_{1.}$

$= 45/55$ or 0.818 ± 0.104

Proportion of Correct Detection (Reliability)

$= n_{22}/n_{2.}$

$= 31/45$ or 0.689 ± 0.138

Proportion of False Alarms

$= n_{12}/n_{1.}$

$= 5/55$ or 0.091 ± 0.076

Proportion of Missed Detections

$= n_{21}/n_{2.}$

$= 8/45$ or 0.178 ± 0.114

Proportion of Inconclusive Results

$= n_{.3}/n_{..}$

$= 11/100 = 0.11 \pm 0.063$

Proportion of Inconclusives for Suitable Tanks

$= n_{13}/n_{1.}$

$= 5/55 = 0.091 \pm 0.078$

Proportion of Inconclusives for Unsuitable Tanks

$= n_{23}/n_{2.}$

$= 6/45 = 0.133 \pm 0.101$

The final report will also include a QA section that documents QA/QC activities and results. This section will compare the QA findings to the QA objectives and will include a statement regarding whether these objectives were met. If the objectives were not met for any measurements for some tank, the impact of this will be assessed and reported. Since the purpose of these measurements is to determine whether a tank is qualified for upgrading with cathodic protection, assessment of any impact will be on whether that decision can be made adequately on the basis of the data collected. For example, measurements of pit depth that do not meet the standard deviation requirement would not affect the results if the tank has a corrosion hole, or if another pit also exceeds the threshold for maximum pit depth.

Raw and final hard copy data will be stored as permanent records in MRI Archives. Computer data will also be stored in MRI Archives, but the life is dependent on the media. Coupons will be stored by the MRI Project Manager for a maximum period of 12 months after the final report has been submitted, then disposed of according to IT directions.

SECTION 6.0

INTERNAL QUALITY CONTROL CHECKS

6.1 Types of QC Checks

The field staff will be proficient in the use of the baseline equipment and procedures.

Replicate field measurements will be made as follows:

- Triplicate depth measurements will be made for the five deepest pits (excluding holes) on each tank and all three measurements and their average and standard deviation will be calculated and reported. In making the pit depth measurements, the field crew will adjust the position of the depth gauge to obtain the maximum reading. These data will be reviewed for consistency and the precision will be determined and reported.

- Duplicate wall thickness measurements will be made using the through wall micrometer.

- If the difference between the largest and smallest of the measurements exceeds 0.02 in, the measurements must be repeated.

SECTION 7.0
PERFORMANCE AND SYSTEMS AUDITS

The IT and MRI QAOs will conduct one or more Technical Systems Audits (TSAs) and the MRI QAO will conduct one or more Audits of Data Quality (ADQs). Performance audits are not appropriate to the scope of work and thus will not be conducted. Results of the audits by the MRI QAO will be reported to the MRI Project Manager and department management. The MRI Project Manager will report the results to the IT Work Assignment Leader. Results of audits by the IT QAO will be reported to the IT Work Assignment Leader. Audit results and any corrective actions taken will be summarized in the final report.

7.1 Technical Systems Audits

The IT and MRI QAOs will conduct technical systems audits during the initial phase of the work assignment, and periodically thereafter. All components of the data gathering and management system will be audited to determine if these systems have been properly designed to meet the quality objectives. The technical systems audit will include a review of the adequacy of the experimental design, the control procedures, and the analytical procedures. This review also includes compliance to the QAPP, personnel qualifications, project management structure, adequacy and safety of the facility and equipment, and the data management and reporting system. The systems audit will end with a review of the report, actions taken by MRI Project Manager on inspections and follow-up inspections, and an audit of the records at the completion of the study. IT and MRI will also participate in any external audits scheduled by the EPA Work Assignment Manager during this study.

7.2 Audits of Data Quality

The audits of data quality, an important component of a total system audit, are the critical evaluation of the measurement, processing, and assessment steps to determine if systematic errors have been introduced into the system or if specific questions regarding the quality of the data need to be resolved. During the data audit, the MRI QAO will audit either randomly selected data that

will be followed through the testing and reporting process, or audit all data in question, if specific questions of quality need to be resolved. In addition, the quality control and calibration data will be audited. The audit verifies that the data-handling system is correct and assesses the quality of the data generated to ensure that the data quality objectives are met.

The completeness of all the data will be checked by the MRI Project Manager after receipt of data from each tank and field site.

7.3 Site Audits

The IT WAL, IT Senior Reviewer, and MRI Project Manager will conduct one site audit per region to assess the field evaluation procedures, compliance to the QAPP, and field data reporting procedures.

SECTION 8.0

CALCULATION OF DATA QUALITY INDICATORS

This section describes the calculation of the data quality indicators that will be used on this project. Sensitivity is defined as the smallest possible equipment measurement.

8.1 Precision

For the triplicate or duplicate measurements, the unit of precision will be the standard deviation of the replicate measurements, where the standard deviation is defined as follows:

$$s = \sqrt{\sum_{i=1}^{n} (y_i - \bar{y})^2 / (n-1)}$$

where:

s	=	standard deviation
y_i	=	measured value of the ith replicate
n	=	number of replicates
$\bar{y}$	=	mean of the replicate measurements.

8.2 Completeness

Completeness is defined as follows for all measurements

$$\%C = 100\% \times \left(\frac{V}{T}\right)$$

where:

$\%C$	=	percent completeness
V	=	number of measurements judged valid
T	=	total number of measurements.

SECTION 9.0
CORRECTIVE ACTION

Corrective actions are required for any major quality-related or compliance problem. Such problems may be detected during routine inspections or by audits. The MRI Project Manager is responsible for notifying the IT WAL, making sure actions are taken to prevent recurrence of such problems, and that the actions taken are documented in a report to the MRI QAO and department management. The MRI QAO must evaluate the effectiveness of corrective actions taken and must document the results in a report to the MRI Project Manager and department management. The MRI Project Manager is responsible for providing these results to the IT WAL. Typical problems and actions to be taken are listed below.

- If problems are due to lack of training, the MRI QAO and/or the MRI Project Manager will implement the necessary training.
- If the problems are due to lack of sufficient resources, the MRI Project Manager will inform department management, who will then provide the required resources.
- If the problems are due to inadequate planning, the plan will be modified, approved as required, and then distributed to those on the distribution list.

SECTION 10.0

QUALITY CONTROL REPORTS TO MANAGEMENT

The IT and MRI QAOs will be responsible for conducting systems audits early in the project. The MRI QAO will be responsible for conducting data audits soon after the data become available. The IT and MRI QAOs will prepare written QA audit reports used to keep project and department management informed. Such written reports will include items appropriate to this project, such as:

- Items/areas audited and the results of the audits
- QAPP changes or deviations, QA/QC problems, and recommendations for corrective action
- Summary of any training and any improvements noted
- Data quality assessment and limitations, and the possible impact on data quality
- Followup and assessment of the effectiveness of any corrective actions taken

If major quality-related problems are detected during an audit, the IT and MRI QAOs will immediately so inform the IT WAL and MRI Project Manager, then follow up with a written report.

SECTION 11.0

REFERENCES

1. 40 *CFR* Part 280 and 281, "Technical Standards and corrective Action Requirements for Owners and Operators of Underground Storage Tanks," 1988. These regulations stipulate that in order to be suitable for upgrading by cathodic protection, a tank must be assessed to ensure that it is structurally sound and free of corrosion holes.

2. ASTM Emergency Practice Standard ES 40-94, "Emergency Standard Practice for Alternative Procedures for the Assessment of Buried Steel Tanks Prior to the Addition of Cathodic Protection," 1995. This standard provides the following requirements for tanks to be suitable for cathodic protection: no pitting greater than 50% of the minimum recommended wall thickness; average metal wall thickness of each 1 m^2 is greater than 85% of the original wall thickness.

3. Section V, Article 9 of the ASME Boiler and Pressure Vessel Code (ASME SE-797). The code provides a visual examination procedure consisting of viewing the entire surface with the human eye at a light level of at least 161 lumen/m^2 from a distance of no more than 61 cm.

4. ASTM Standard G 1-90 (Re-approved 1994) "Standard Practice for Preparing, Cleaning, and Evaluating Corrosion Test Specimens." This standard will be used as the reference for marking and preparing coupons for testing.

5. ASTM Standard G 46-94, "Standard Guide for Examination and Evaluation of Pitting Corrosion," 1994. This standard will be used as the reference for testing coupons for the evidence of pitting corrosion. The guide is used for the corrosion examination tests.

6. ASTM Standard E 114, "Practice for Ultrasonic Pulse-Echo Straight-Beam Examination by the Contract Method," 1990.

7. ASTM Standard E 797, "Practice for Measuring Thickness by Manual Ultrasonic Pulse-Echo Contact Method," 1990.

8. API Standard 1631, "Interior Lining of Underground Storage Tanks," 3rd Edition, April 1992.

9. National Leak Prevention Association NLPA 631, "Entry, Cleaning, Interior Inspection and Repair, and Lining of Underground Storage Tanks," Fourth Ed., 1991.

10. Underwriters Laboratories Standard UL 58, "Steel Underground Tanks for Flammable and Combustible Liquids," 1984.

11. H.R. Inspection Service, Inc., Shawnee, KS, "Radiographic Testing Procedure NDE-RT."

12. National Leak Prevention Association NLPA Standard 632, " Internal Inspection of Steel Tanks For Upgrading with Cathodic Protection Without Lining," First Ed., 1990.

APPENDIX A

Radiographic Testing Procedure

NDE-RT REV. 4
MARCH 10, 1993

H. R. INSPECTION SERVICE, INC.
P. O. BOX 3280
6878 MARTINDALE ROAD
SHAWNEE, KANSAS, 66203

RADIOGRAPHIC TESTING PROCEDURE

NDE-RT

THIS PROCEDURE HAS BEEN TESTED
AND APPROVED FOR USE BY

BOB WILLIAMSON
ASNT TC1A LEVEL III

NDE-RT RADIOGRAPHIC TESTING PROCEDURE

TABLE OF CONTENTS

R-110	Scope	2
R-120	Safety Requirements	2
R-130	Applicable Documents	2
R-220	General Documents	3
R-230	Industrial Radiographic Films, Screens, & Radiographs	3
R-250	Radiographic Sharpness	7
R-260	Image Quality Indicators	8
R-270	Radiographic Technique	11
R-280	Procedure REquirements	13
R-290	Evaluation of Radiographs	13
R-294	Qualification of Radiographic Personnel	14

RADIOGRAPHIC TESTING PROCEDURE

NDE-RT

R-110 SCOPE

R110.1 The procedure covers the requirements for radiographic examination of ASME codes including the ASME Boiler and Pressure Vessel Code (Sections I, V, and VIII) and ANSI/ASME B31.1 and B31.3.

R-120 SAFETY REQUIREMENTS

R120.1 Each installation or area where x-ray or radioactive material is used shall have a radiation survey made during the initial operation and any other time when the conditions change, to assure adequate personnel protection. In all instances, each person using the radiation source shall wear a radiation film badge and a pocket dosimeter. Personnel radiation exposure shall not exceed the limits called for in Title 10, Code of Federal Register.

R-130 APPLICABLE

Contract Specifications and Codes.

R130.1 ASME Boiler and Pressure Vessel Codes - 1992 ed.

1. Section I Power Boiler
2. Section VIII Pressure Vessels
3. Section V Nondestructive Examination
   a. Article 1
   b: Article 2
   c. SE94 & SE142

R130.2 ANSI/ASME B31.1 Power Piping - 1992 ed.

R130.3 ANSI/ASME B31.3 Chemical Plant and Petroleum Refinery Piping - 1992 ed.

R-220 GENERAL REQUIREMENTS.

R-221 Surface Preparation.

R-221.1 Materials

Surfaces shall satisfy the requirements of the applicable materials specifications, with additional conditioning, if necessary, by any suitable process to a degree that surface irregularities cannot mask or be confused with discontinuities.

R-221.1 Welds

When required, the weld ripples or weld surface irregularities on both the inside (where accessible) and outside, may be removed by any suitable process to such a degree that the resulting radiographic image due to any irregularities cannot mask or be confused with the image of any discontinuity.

R-221.3 Surface Finish

The finished surface of all butt-welded joints may be flush with the base materials or may have reasonably uniform crowns, with reinforcement not to exceed that specified in the referencing Code Section (Par PW-35 of Section I & Table 127.4.2 of ANSI B31.1).

R-230 INDUSTRIAL RADIOGRAPHIC FILMS, SCREENS AND RADIOGRAPHS.

R-231 Film Selection.

Radiographs shall be made using film equal to or finer grained than Type 2 of Recommended Practice SE-94.

R-232 Screens.

Except when restricted by the referencing Code Section, intensifying screens may be used with the film types specified in R-231.

R-233 Film Processing.

R-233.1

a. Liquid x-ray developer, fixers, short stop and Photo-Flo shall be prepared in accordance with manufacturer's recommendations.

b. Solutions shall be thoroughly stirred before processing.

c. Development time shall be standardized based on temperature and exposure technique must be adjusted for the developing time.

d. Film shall be agitated during developing at one minute intervals.

e. After development, the film shall be transferred to the short stop for one minute. The film should be agitated for the first 15 or 20 seconds in the short stop.

f. After the short top the film shall be transferred to the fixer and agitated for 10 seconds. They are to remain in the fixer for ten minutes minimum or twice the film-clearing time. Films shall not remain more than 15 minutes in fresh fixer.

g. The film must be washed for a minimum of 30 minutes to remove all residual fixer prior to drying.

h. The film shall be transferred to the Photo-Flo solution for 90 seconds before drying.

i. All films shall be free from processing or other defects which would interfere with proper interpretation of the radiograph.

R-233.2 Quality of Radiographs.

All radiographs shall be free from mechanical, chemical or other blemishes to the extent that they cannot mask or be confused with the image of any discontinuity in the object being radiographed. Such blemishes include, but are not limited to:

a. Fogging.
b. Processing defects such as streaks, water marks, or chemical stains.
c. Scratches, finger marks, crimps, dirt, static marks, smudges or tears.
d. Loss of detail due to poor screen to film contact.
e. False indications due to defective screens or internal faults.

R-234 Radiographic Density.

R-234.1 Density Limitations of Radiographs.

The film density through the radiographic image of the body of the appropriate penetrameter and the area of interest shall be 1.8 minimum for single film viewing for radiographs made with an x-ray source and 2.0 minimum for radiographs made with a gamma-ray source. For composite viewing of double film exposures the minimum density shall be 2.6. Each radiograph of a composite set shall have a minimum density of 1.3. The maximum density shall be 4.0 for either single or composite viewing. A tolerance of 0.05 in density is allowed for variations between densitometer readings.

R-234.2 Monitoring Density Limitations of Radiographs.

Densitometers shall be used for assuring compliance with film density requirements and a national standard calibrated step wedge film shall be used for checking densitometer calibration. Step wedge comparison film may be used, for direct comparison with production radiographs to show compliance with density requirements, as a permissable alternate to the use of a densitometer as required above.

R-235 Scattered Radiation.

R-235.1 Back Scatter Check.

As a check on back-scattered radiation, a lead symbol "B", with minimum dimensions of 1/2 inch in height and 1/16 inch in thickness, shall be attached to the back of each film holder.

R-235.2 Excessive Scatter.

If a light image of the "B" appears on the darker background of the radiograph, protection from backscatter if insufficient and the radiograph shall be considered unacceptable. A dark image of the "B" on a lighter background is not cause for rejection.

R-236 System of Identification of Radiographs.

A system of Radiograph identification shall be used to produce permanent identification on the radiograph traceable to the contract, component, weld seam, or part numbers, as appropriate. In addition, the manufacturer's symbol or name and the date of the radiograph shall be plainly and permanently included on the radiograph. This identification system does not necessarily require that the information appear as radiographic images. In any case, this information shall not obscure the area of interest.

R-237 Location Markers.

Location markers, which are to appear as radiographic images on the film, shall be placed on the part, not on the cassette, and their locations shall be marked on the surface of the part being radiographed or on a map in a manner permitting the area of interest on a radiograph to be accurately located on the part for the required retention period of the radiograph and providing evidence on the radiograph that the required coverage of the region being examined has been obtained. Location markers shall be placed as follows (see Fig. T-275):

R-237.1 Single-Wall Viewing.

R-237.1.1 Source side markers.

Source side location markers shall be used when radiographing the following:

a. Flat components or longitudinal joints in cylindrical or conical components;

b. Curved or spherical components whose concave side is toward the source and when the source to material distance is less than the inside radius of the component;

c. Curved or spherical components whose convex side is toward the source.

R-237.1.2 Film Side Markers.

a. Film side markers shall be used when radiographing curved or spherical components whose concave side is toward the source and when the source to material distance is greater than the inside radius.

b. As an alternate for source side markers in R-237.1.1 (a), film side markers may be used when the radiograph shows coverage beyond the location markers to the extent demonstrated by Fig. T-275 (e) and when this alternate is documented in accordance with R-293.

R-237.1.3 Either Side Markers.

Either source side or film side location markers may be used when radiographing curved or spherical components whose concave side is toward the source and the source to material distance equals the inside radius of the component.

R-237.2 Double-Wall viewing.

For double-wall viewing at least one location marker shall be placed on the outside surface adjacent to the weld (or on the material in the area of interest) for each exposure.

R-237.3 Location Marking with a Map.

When inaccessibility or other limitations prevent the location of markers as stipulated in R-237.1 and R-237.2, a dimensioned map of the geometric arrangement including marker locations shall accompany the radiographs and shall show that full coverage has been obtained.

R-250 SHARPNESS OF RADIOGRAPHIC IMAGE.

R-251 Geometrical Unsharpness Limitations.

When requjired by the referencing Code Section, geometric unsharpness of the radiograph shall not exceed the following:

Material Thickness, inches	Ug Maximum, inches
Under 2	0.020
2 through 3	0.030
Over 3 through 4	0.040
Greater than 4	0.070

Note: Material thickness is the thickness on which the penetrameter is based.

R-252 Geometrical Unsharpness.

Geometrical unsharpness equals source size times thickness over object to source distance.

$$Ug = \frac{FT}{D}$$

where:

Ug = geometrical unsharpness

F = source size, inches-the maximum effective dimension (diameter) of the radiation source (or focal spot) in the plane of the distance D from the weld, see table R-251.

T = thickness in inches of the weld or other object being radiographed assuming the film is against the weld or object; otherwise it is the thickness of the weld or object plus the space between the film and the weld or object.

D = distance in inches between the source and the weld or other object being radiographed.

TABLE R-251

Determination Factor "F" Isotope Source Projected Length

Dia. X Length	F = inches
1/32 X 1/32	0.044
1/32 X 1/16	0.070
1/16 X 1/16	0.088
1/16 X 3/32	0.112
1/16 X 1/8	0.140
.10 X .10	0.141
1/8 X 3/32	0.156
1/8 X 1/8	0.177

NOTE: Refer to Recommended Practice SE-94, Section 10, for a method of determining geometric unsharpness. Alternatively, a nomograph as shown in Recommended Practice SE-94 may be used.

R-253 Calibration of Source Size.

The equipment manufacturer's certification of the maximum effective dimension of the source shall be acceptable.

R-260 Image Quality Indicators (IQI).

R-261 IQI (Penetrameter) Sensitivity.

Radiography shall be performed with a technique of sufficient sensitivity to show the penetrameter image and the specified hole, which are essential indications of the image quality of the radiograph. The radiographs shall also display the identifying numbers and letters.

R-262 IQI Design and Selection.

R-262.1 IQI Design.

Penetrameters shall be manufactured and identified in accordance with the requirements or alternates allowed in SE-142 and Appendices. ASME standard penetrameters shall consist of those specified in Table R-233.1.

R-262.2 IQI Selection.

The essential hole size and designated penetrameter shall be as specified in Table R-276. A smaller hole or a thinner penetrameter than listed for each range may be used, provided all other requirements for radiography are met.

R-262.2.1 Welds With Reinforcements.

For welds with reinforcements the thickness on which the penetrameter is based is the nominal single wall thickness plus the maximum reinforcement permitted by the referencing Code Section. Backing rings or strips are not to be considered as part of the weld or reinforcement thickness in penetrameter selection.

R-262.2.2 Welds Without Reinforcements.

For welds without reinforcements the thickness on which the penetrameter is based is the nominal single wall thickness. Backing rings or strips are not to be considered as part of the weld thickness.

R-263 Use of Penetrameters to Monitor Radiographic Examination.

R-263.1 Placement of Penetrameters.

a. Source Side Penetrameter(s). The penetrameter(s) shall be placed on the source side of the part being examined, except in the condition described in R-263.1 (b).

b. Film Side Penetrameter(s). Where inaccessibility prevents hand placing the penetrameter(s) on the source side, it shall be placed on the film side in contact with the part being examined. A lead letter "F" at least as high as the penetrameter identification number(s) shall be placed adjacent to or on the penetrameter(s), but shall not mask the essential hole where hole penetrameters are used.

c. Penetrameter Location for Welds - Hole Type. The penetrameter(s) may be placed adjacent to or on the weld. The identification number(s) and the lead letter "F", when used, shall not be in the area of interest unless either part geometry makes it impractical to place the penetrameter outside the area of interest or the weld metal is not radiographically similar to the base metal.

d. Penetrameter Location for Welds - Wire Type. The penetrameter(s) shall be placed on the weld so that the length of the wires is perpendicular to the length of the weld. The penetrameter(s) shall not be placed in the area of interest unless conditions exist as stated in R-263.1 (c).

R-263.2 Number of Penetrameters.

a. For components where one or more film holders are used for an exposure, at least one penetrameter image shall appear on each radiograph except as outlined in R-263.2 (b) through (f).

b. If the requirements of R-261 are met by using more than one penetrameter, one shall be in the lightest area of the radiograph and the other in the darkest; the intervening densities on the radiograph shall be considered as having acceptable density. If the density of the radiograph anywhere through the area of interest varies by more than minus 15% or plus 30% from the density througth the body of the penetrameter, within the minimum/maximum allowable density ranges specified in R-234.1 then an additional penetrameter shall be used bor each exceptional area or areas and the radiograph retaken. When calculating the allowable variation in density, the calculation may be rounded to the nearest 0.1.

c. For cylindrical vessels or flat components where one or more exposure cassettes are used for an exposure, at least one penetrameter image shall appear on each radiograph except where the source is placed on the axis of the object and a complete circumference or portion of the circumference is radiographed with a single exposure, in which case, at least three penetrameters shall be spaced approximately 120 degrees apart. When the source is placed on the axis of the circumference and a portion of the circumference (four or more film location) is radiographed during a single exposure, at least three penetrameters shall be used. One penetrameter shall be in the approximate center of the section exposed, and one at each end. When the section exceeds 240 degrees, three penetrameters spaced 120 degrees apart may be used. In each case, additional film locations may be required around the circumference to establish 120 degree penetrameter spacing, otherwise at least one penetrameter image shall appear on each radiograph. Where portions of longitudinal welds adjoining the circumferential weld are being examined simultaneously with the circumferential weld, additional penetrameters shall be placed on the longitudinal welds at

the ends of the sections most remote from the source of those welds being radiographed. When an array of objects in a circle is radiographed, at least one penetrameter shall show on each object image.

d. For spherical vessels, where the source is located at the center of the vessel and one or more exposure cassettes are simultaneously exposed, at least three equally spaced penetrameters per 360 degree circumferential seam plus one additional penetrameter for each other seam shall be used.

e. If the required penetrameter image and specified hole does not show on any film in a multiple film technique, but does show in composite viewing, interpretation shall be permitted only by composite film viewing.

R-263.3 Shims Under Penetrameters.

a. A shim of material radiographically similar to the weld metal shall be placed under the penetrameter if the weld reinforcement and/or backing strip are not removed.

b. The shim thickness shall be selected so the total thickness being radiographed under the penetrameter is at least the same as the norminal single wall thickness plus the maximum reinforcement permitted by the referencing Code Section (if reinforcement is not removed) plus backing strip (if not removed) and other thickness variations such as in nozzle geometries.

c. When shims are used the plus 30% density restriction of R-263.2 (b) may be exceeded, provided the required penetrameter sensitivity is displayed and the density limitations of R-234.2 are not exceeded.

d. The shims dimensions shall exceed the penetrameter dimensions such that the outline of at least three sides of the penetrameter image shall be visible in the radiograph.

R-270 RADIOGRAPHIC TECHNIQUE.

R-271 Single Wall Technique.

R-271.1 Radiography, regardless of the configuration of the material, shall be done using a single-wall radiographic technique whenever practicable. Penetrameter size and placement shall be per R-262 and R-263, as applicable.

R=271.2 For complete radiographic coverage of cylindrical girth welds, a minimum of four exposures 90 degrees apart is required when the source is placed outside and the film inside the object.

R-272 Double-Wall Technique

R-272.1 Double-Wall Viewing.

Unless otherwise specified, for materials and for welds in pipe and tubes 3.5 inches (89 mm) or less in nominal outside diameter, a technique may be used in which the radiation passes through two walls and the weld (material) in both walls is viewed for acceptance on the same film. For welds, the radiation beam may be offset from the plane of the weld at an angle sufficient to separate the images of the source side and film side portions of the weld so there is no overlap of the areas to be interpreted in which case a minimum of two exposures taken at 90 degrees to each other shall be made for each joint. As an alternate, the weld may be radiographed with the radiation beam positioned so the images of both walls are superimposed, in which case at least three exposures shall be made at 60 degree to each other. For double-wall viewing a source side penetrameter shall be used and placement shall be as indicated in R-263.1.

R-272.2 Single Wall Viewing.

a. For material and for welds in pipe and tubes with a nominal outside diameter greater than 3.5 inches (89 mm), radiographic examination shall be performed for single-wall viewing only. An adequate number of exposures shall be taken to ensure complete coverage.

b. For welds in pipe or tubes with a nominal outside diameter 3.5 inches (89 mm) or less, single-wall viewing may be used provided the source is offset from the plane of the weld certerline as outlined in R-272.1. As minimum, three exposures 120 degrees apart shall be required. A film-side penetrameter shall be used and placement shall be as indicated in R-263.1 (c) and (d).

R-273.3 Penetrameter Selection.

The designated hole penetrameter with essential hole or wire diameter shall be as specified in Table R-276.

R-274 Selection of Energy of Radiation.

R-274.1 X-Radiation. Except as provided in R-274.3, the maximum voltage used in the examination shall not exceed the value shown in Figures T-272.1(a),(b), or(c), as applicable.

R-274.2 Gamma Radiation. Except as provided in R-274.3, the recommended minimum thickness for which radioactive isotopes may be used is as follows:

	Minimum Thickness (in.)	
Material	Ir 192	Co 60
Steel	0.75	1.50
Copper or Nickel	0.65	1.3
Aluminum	2.5	----

The maximum thickness for the use of radioactive isotopes is primarily dictated by exposure time; therefore, upper limits are shown. The minimum recommended thickness limitation may be reduced when the radiographic techniques used demonstrate that the required radiographic sensitivity has been obtained.

R-280 PROCEDURE REQUIREMENTS.

R-281 Procedure Compliance Without a Written Procedure.

Compliance with the density and penetrameter image requirements on production radiographs shall be considered evidence of qualification of the procedure used.

R-282 Requirements for a Written Radiographic Procedure.

When required by the referencing Code Section, a written procedure shall contain, as minimum, the following technique variables:

a. material and thickness range
b. isotope used or maximum x-ray voltage
c. minimum source-to film distance
d. maximum source size
e. film brand or type
f. screens used.

R-290 EVALUATION OF RADIOGRAPHS.

R-291 Facilities for Viewing Radiographs.

Viewing facilities shall provide subdued background lighting of an intensity that will not cause troublesome reflections, shadows, or glare on the radiograph. Equipment used to view radiographs for interpretation shall provide a light source sufficient for the essential penetrameter hole to be visible for the specified density range. The viewing conditions shall be such that light

from around the outer edge of the radiograph or coming through low-density portions of the radiograph does not interfere with interpretation.

R-292 Evaluation by Manufacturer.

Prior to being presented to the inspector for acceptance, the radiographs shall be examined and interpreted by qualified Level II radiograhic personnel as complying with the referencing Code Section and with radiographic procedure. The qualified Level II or Level III radiographic personnel shall record, on a review form accompanying the radiograph, the interpretation of each radiograph and disposition of the material examined.

R-293 Radiographic Setup Information.

To aid in proper interpretation of radiographs, a sketch, drawing, written procedure, or equivalent record shall be prepared to show the setup used. The information shall accompany each group of radiographs if the same information applies. Reference to a standard setup is acceptable if descriptions of this standard setup are readily available. As a minimum, the information shall include:

a. Number of films.

b. The data specified in R-236 and R-237.3 when applicable.

R-294 QUALIFICATION OF RADIOGRAPHIC PERSONNEL.

R-295 Requirements.

Personnel shall be qualified in accordance with the requirements of SNT-TC-1A, 1984 Edition.

a. NDT LEVEL I - An NDT Level I individual shall be qualified to properly perform specific calibrations, specific tests and specific evaluations according to written instruction and to record the results. He shall receive the necessary guidance or supervision from a certified NDT Level II or III individual.

b. NDT LEVEL II - An NDT Level II individual shall be qualified to set up and calibrate equipment and to interpret and evaluate results with respect to applicable codes, standards and specifications. He shall be thoroughly familiar with the scope and limitations of the method and shall exercise assigned responsibility for on-the-job training and guidance of trainees and NDT Level I personnel. He shall be able to prepare written instruction, and to organize and report nondestructive testing investigations.

c. NDT LEVEL III - An NDT Level III individual shall be capable of and responsible for establishing techniques, interpreting code, standards and specification, and designating the particular test method and technique to be used. He shall be responsible for the complete NDT operation he is qualified for and assigned to and shall be capable of evaluating results in terms of existing codes, standards and specifications. He shall have sufficient practical background in applicable material, fabrication, and/or product technology to establish techniques and to assist the design engineer in establishing acceptance criteria where none are otherwise available. It is desirable that he have general familiarity with other commonly used NDT methods. He shall be responsible for the training and examination of NDT Level I and Level II personnel for certification. The actual administration of training and grading of examinations may be delegated to a duly selected representative of the Level III individual and so recorded.

TABLE T-233.1
PENETRAMETER DESIGNATION THICKNESS,
AND HOLE DIAMETERS

Penetrameter Designation	Penetrameter Thickness	1T Hole Diameter	2T Hole Diameter	4T Hole Diameter
5	0.005	0.010	0.020	0.040
7	0.007	0.010	0.020	0.040
10	0.010	0.010	0.020	0.040
12	0.012	0.012	0.025	0.050
15	0.015	0.015	0.030	0.060
17	0.017	0.017	0.035	0.070
20	0.020	0.020	0.040	0.080
25	0.025	0.025	0.050	0.100
30	0.030	0.030	0.060	0.120
35	0.035	0.035	0.070	0.140
40	0.040	0.040	0.080	0.160
45	0.045	0.045	0.090	0.180
50	0.050	0.050	0.100	0.200
60	0.060	0.060	0.120	0.240
80	0.080	0.080	0.160	0.320
100	0.100	0.100	0.200	0.400
120	0.120	0.120	0.240	0.480
160	0.160	0.160	0.320	0.640
200	0.200	0.200	0.400	- -

APPENDIX B

Baseline Testing Procedures and Data Collection Forms

FIELD EQUIPMENT NEEDS

for Tank Inspections

1. Clip Board
2. Data Forms
3. Pens
4. Tape Measure (25 ft)
5. Chalk Sticks
6. Wax Marker
7. Chalk Line
8. Chalk Powder
9. Twine or Strong String
10. 6-ft Step Ladder
11. Extension Cords
12. Multiple Outlet Adapter
13. High Intensity Light (500 W)
14. Jack Knife
15. Hammer
16. Center Punch
17. Small Cold Chisel
18. Work Gloves
19. Camera
20. Film
21. Flash
22. Screw Drivers
23. Vise Grips
24. DM4 DL Ultrasonic Thickness Gauge
25. Couplant and Applicator
26. Calibration Blocks
27. Laptop Computer
28. Hand Calculator
29. Micrometer Depth Gauge
30. Micrometer Wall Thickness Gauge
31. Heavy Duty Drill Motor
32. 5/16 in Drill Bits (2)
33. 5/8 in Drill Bits (2)
34. Safety Glasses with Side Shields
35. Oil Can
36. Extra Oil
37. Hand Files
38. Shop Vac (supplied by sandblaster?)
39. Drinking Water
40. Brush or Wisk Broom
41. Wire Brush
42. Hard Hats
43. First Aid Kit

GENERAL INSTRUCTIONS FOR INSPECTING TANKS

1. Complete the Initial Tank Data and History form.

2. After the tank is removed from the ground, have a 4-ft by 4-ft or larger opening cut in one end for safe access.

3. If possible, allow the outside of the tank to dry off, if wet, and sweep or scrape off excessive soil.

4. Grid the inside and outside of the tank to allow for future location references. See special instructions for doing this.

5. On at least four locations (two inside and two outside, on opposite sides of the tank), mark off and label the subsection lines for future reference. (See illustration for guidance.)

6. Complete the Tank Welding Details form and the Tank Views chart.

7. Conduct internal and initial external inspection of the tank, using the Tank Visual Inspection forms provided.

8. Conduct the ultrasonic inspection. The Krautkramer Branson DM4 DL ultrasonic thickness gauge or equivalent should be used after checking its calibration. Preferably, it should be used with its data logger capability and the data then transferred to a PC. Otherwise, use the Ultrasonic Inspection form. (Note, this step may be conducted before or after steps 9 and 10.)

9. Have the exterior of the tank sandblasted.

10. Conduct a second exterior inspection of the tank, using the Tank Visual Inspection forms provided.

11. Take pit depth measurements of the deepest pits found, using the Starrett micrometer depth gauge and the Pit Depth forms provided.

12. Drill sentry holes. For 1/4 inch plate, first, drill a 5/16 in pilot hole, followed by a 5/8 in sentry hole. Back off the larger nut on the anvil side of the thickness micrometer and pull anvil against spring tension until it can be rotated 90°. Then feed anvil through sentry hole, rotate the anvil back to its normal position, and using the ratchet stop on the spindle take a thickness measurement. Rocking the micrometer slightly will enable you to get the minimum reading. Record reading on the Wall Thickness forms provided.

INSTRUCTIONS FOR GRIDDING THE TANK

1. The tank is to be divided into 3 ft by 3 ft (or less) segments with a grid work. First, measure the diameter and length of the tank. In all of the following, the process may be made easier if at some point the tank can be rolled 90° so you don't have to work on the top of the tank.

2. The number of circumferential segments is equal to the diameter, in feet. Thus, an 8-ft diameter tank should have 8 circumferential segments, a 10-ft diameter tank 10 segments, etc.

3. The length of the tank should be divided into equal increments, with each increment to be no more than one meter. Tanks eight feet in diameter should be divided longitudinally as follows:

6,000 gal	5 segments
8,000 gal	7 segments
10,000 gal	8 segments
12,000 gal	10 segments

4. For the interior of the tank, determine the length of the arc needed for the grid. For example, if the diameter is 8 feet, the circumference is $\Pi x D = 301.6$ in. One eighth of this is 37.7 in, or approximately 37.75 in. Then, at both ends of the tank mark off with chalk or a wax marker the eight (approximately) equal segments. It is best to start from the top of the tank, as the top is more easily identifiable than any other reference.

5. Using a carpenter's chalk line, snap longitutinal grid lines between the marks placed in step 4.

6. Lay out the longitudinal segments. For example, for a 6000 gal tank, which is 16 ft long, use 16/5 ft, or about 38.5 in. Make a set of marks this distance apart for the length of the tank at three or four locations around the circumference (eg., at 60, 180, and 300 degrees from the top). Then, using a piece of chalk or wax marker, draw a set of circumferential grid lines through the marks. (There will be 4 such lines for a 16-ft tank.)

7. The process on the outside of the tank is basically the same. It is recommended that the initial marks at each end of the tank around the circumference be augmented with a center punch or chisel, so they can be readily relocated after sandblasting or rain. A carpenter's chalk line can be used for both the longitudinal and circumferential grids, unless the surface is wet or extremely dirty. In that case, use a piece of regular string as a guide and draw the lines with a wax marker.

8. For the circular ends of the tank, locate the center. Mark a vertical diameter and a horizontal diameter, dividing the end into 4 parts. Mark a circle 20.3 in in diameter in the center. The center circle becomes one section, the other 4 sections are defined by

the center circle and the vertical and horizontal marks. This gives approximately 9 ft^2 areas for an 8-ft diameter tank. If it is necessary to divide the end into 1 ft^2 areas, begin with the vertical diameter and mark a vertical line every ft in both directions. Then begin with the horizontal diameter and mark a vertical line every ft in both directions. The result divides the end into 1 ft^2 sections. A division into square feet for tanks of different diameters is shown in the figure.

Note: 1 meter = 39.36 inches; 1 gallon = 231 cubic inches.

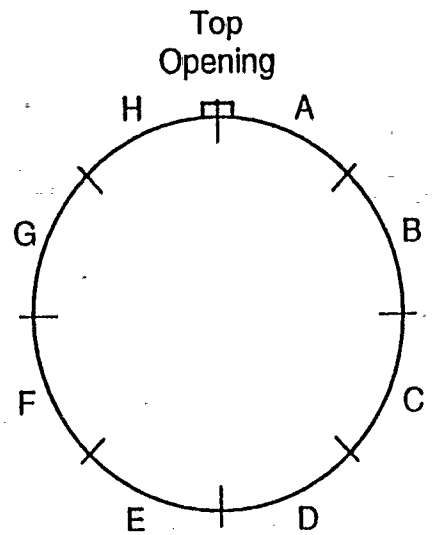

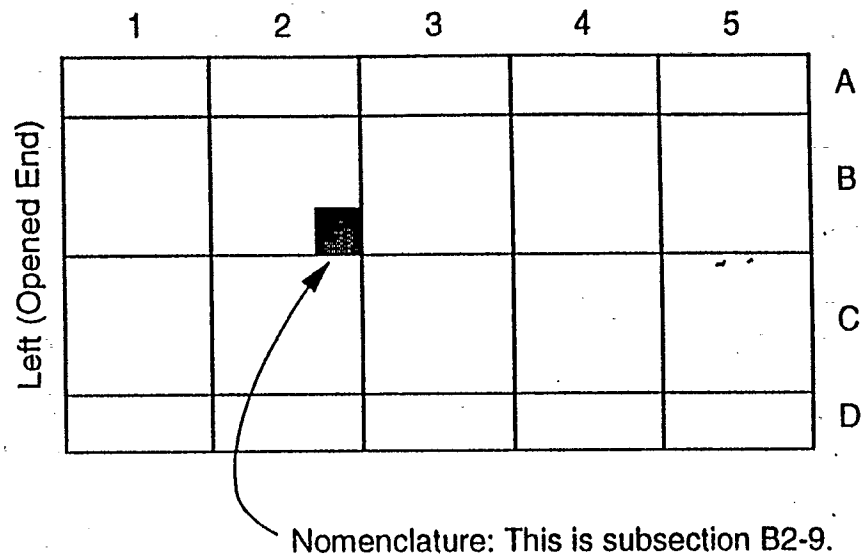

Example Subgrids:

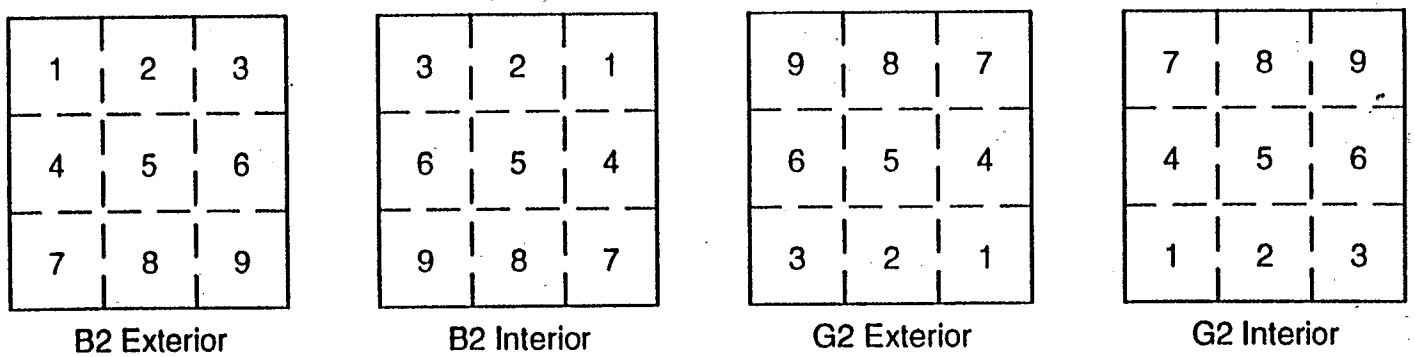

Note: *Interior and exterior notations are identical for same portion of tank. Also, notation does not change with rotation of tank.*

95-24 SEV glauz scm 1 062095

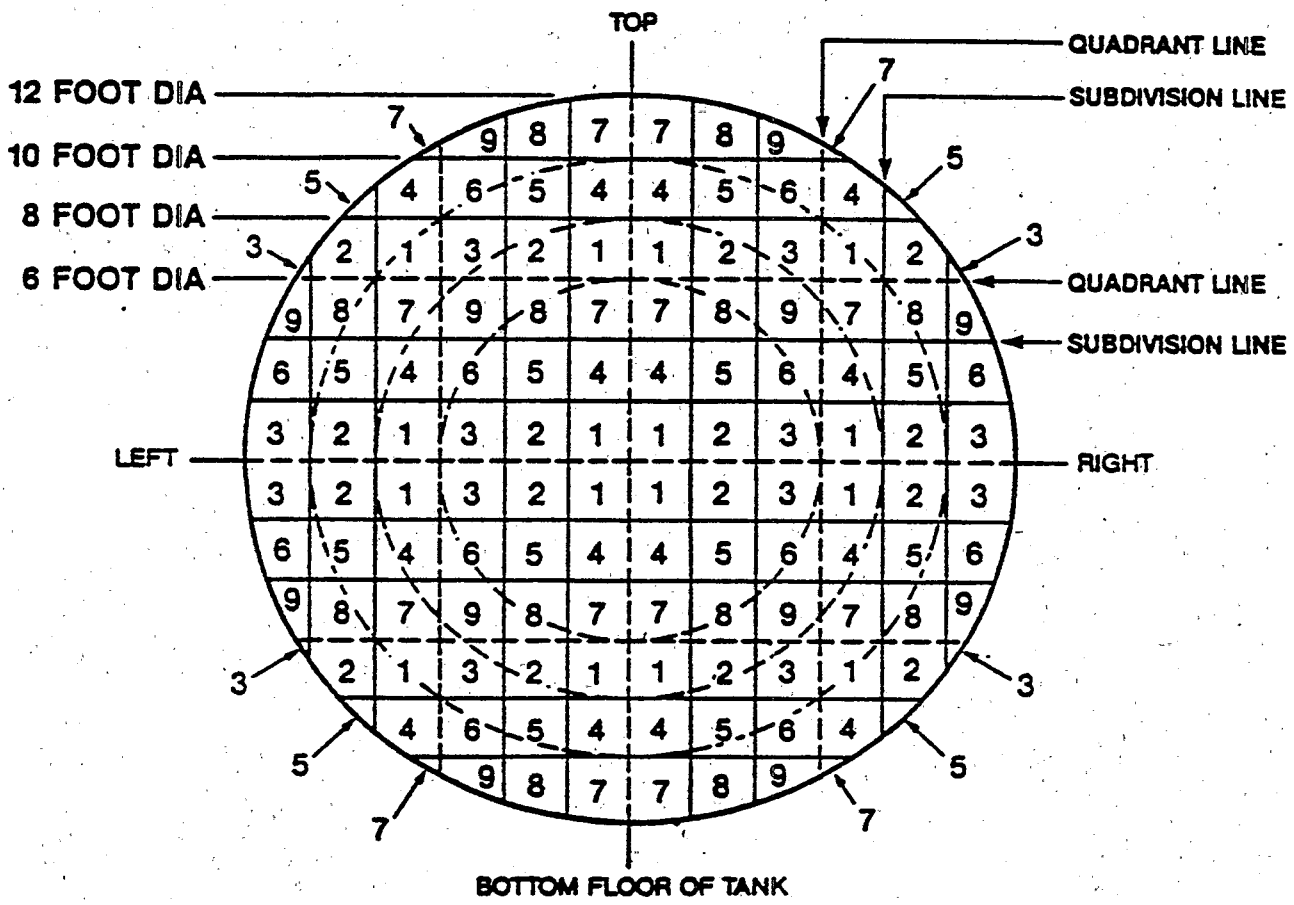
TOP
QUADRANT LINE
SUBDIVISION LINE
12 FOOT DIA
10 FOOT DIA
8 FOOT DIA
6 FOOT DIA
QUADRANT LINE
SUBDIVISION LINE
LEFT
RIGHT
BOTTOM FLOOR OF TANK

INSTRUCTIONS FOR COMPLETING TANK VIEW INFORMATION

1. Provide proper project tank identification number and location of site.

2. Sketch the locations of all tank openings. Show bung locations on the top, and indicate their diameters (eg., 4 in or 2 in). Indicate the size and location of the manway. Sketch the size, shape, and location of the tank end wall opening.

3. Show locations of all tank welds except the head joints. Include longitudinal and circumferential welds on the cylindrical portion and any welds on the heads.

4. Sketch and label the grid system used on the two heads, with 4 or 5 sections per head.

5. Show the approximate locations of any holes visible before exterior sandblasting.

6. Indicate whether or not the tank had obviously been coated, locations where coating has deteriorated or is missing, and the general condition of the coating.

7. Indicate the approximate locations of visually unusual sections of the tank prior to exterior sandblasting, if any. This would include areas of major damage, discolored areas, areas symptomatic of product leakage, etc.

8. Provide additional comments on your initial impression of the tank. See example below.

Tank No.	Tank Location:
Date:	Data entered by:

INITIAL TANK DATA AND HISTORY

1. Site contact, name and phone _____
2. Tank capacity, diameter, and length _____
3. Tank manufacturer _____
4. Tank nominal wall thickness _____
5. Tank serial no. or other identification _____
6. Tank age, if known _____
7. Product stored in tank _____
8. Was cathodic protection used (yes/no) ? _____
9. Was tank coated internally (yes/no)? _____
10. Was tank coated externally (yes/no)? _____
11.. Backfill material _____
12. Evidence of product leakage in backfill _____
13. Leak and repair history, if available _____

    _____

14. Other observations _____

    _____

Tank No.	Tank Location:
Date:	Data entered by:

TANK VISUAL INSPECTION FORM

Internal/External _____ Sandblasted (Y/N) _____ Page _____

Grid ID _____ Percent Area Corroded _____ Subgrid of Large Dent _____

Hole Subgrid _____ V. Deep Pit Subgrid _____ Deep Pit Subgrid _____

Many Shallow Pits? _____ Pattern? _____ General Corrosion? _____

Comments _____

Grid ID _____ Percent Area Corroded _____ Subgrid of Large Dent _____

Hole Subgrid _____ V. Deep Pit Subgrid _____ Deep Pit Subgrid _____

Many Shallow Pits? _____ Pattern? _____ General Corrosion? _____

Comments _____

Grid ID _____ Percent Area Corroded _____ Subgrid of Large Dent _____

Hole Subgrid _____ V. Deep Pit Subgrid _____ Deep Pit Subgrid _____

Many Shallow Pits? _____ Pattern? _____ General Corrosion? _____

Comments _____

Grid ID _____ Percent Area Corroded _____ Subgrid of Large Dent _____

Hole Subgrid _____ V. Deep Pit Subgrid _____ Deep Pit Subgrid _____

Many Shallow Pits? _____ Pattern? _____ General Corrosion? _____

Comments _____

Grid ID _____ Percent Area Corroded _____ Subgrid of Large Dent _____

Hole Subgrid _____ V. Deep Pit Subgrid _____ Deep Pit Subgrid _____

Many Shallow Pits? _____ Pattern? _____ General Corrosion? _____

Comments _____

Tank No.	Tank Location:
Date:	Data entered by:

TANK WELDING DETAILS

1. Comparing with the illustrations below, what type of weld construction is used for the shell joints? No. _____

2. Comparing with the illustrations below, what type of weld construction is used for the head joints? No. _____

SHELL JOINTS

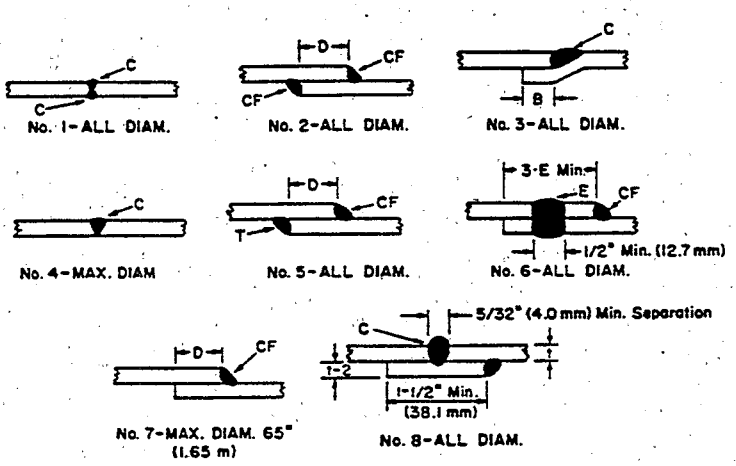

B — Overlap — 1/2 inch (12.7 mm) minimum.

C — Continuous welds.

CF — All lap welds shall be continuous full fillet welds.

D — Overlap — 1/2 inch (12.7 mm) minimum for diameters 48 inches (1.2 m) or less; 3/4 inch (19.1 mm) minimum for diameters over 48 inches (1.2 m).

E — 1/2 inch (12.7 mm) minimum diameter lock weld, not over 12 inches (305 mm) apart.

T — Tack weld 1 inch (25 mm) spots, not over 12 inches (305 mm) apart.

t — Thickness of backup bar to be same as shell thickness.

HEAD JOINTS

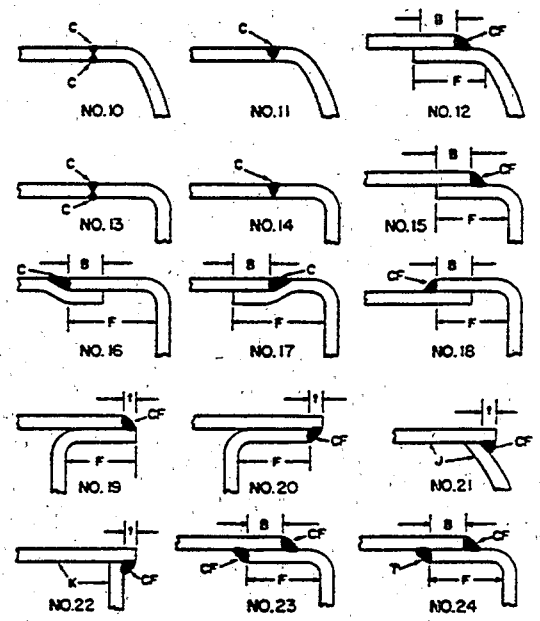

B — Overlap — 1/2 inch (12.7 mm) minimum.

C — Continuous welds.

CF — Shall be continuous full fillet welds.

F — Not less than five times head thickness — minimum 1/2 inch (12.7 mm).

J — Joint No. 21 — Minimum thickness of 0.167 inch (4.24 mm).

K — Joint No. 22 — Heads require bracing. (see No. 1 and 2 of Figure 6.2). Minimum thickness of 0.167 (4.24 mm).

T — Tack weld 1 inch (25 mm) spots, not over 12 inches (305 mm) apart.

t — Minimum, 1 X shell thickness.

Heads may be flat, dished, or cone.
Height of cone heads — not less than one-twelfth diameter.

Tank No.	Tank Location:
Date:	Data entered by:

ULTRASONIC INSPECTION FORM

Grid _____ Subgrid _____ Thick. _____	Grid _____ Subgrid _____ Thick. _____	Grid _____ Subgrid _____ Thick. _____	Grid _____ Subgrid _____ Thick. _____	Grid _____ Subgrid _____ Thick. _____
Grid _____ Subgrid _____ Thick. _____	Grid _____ Subgrid _____ Thick. _____	Grid _____ Subgrid _____ Thick. _____	Grid _____ Subgrid _____ Thick. _____	Grid _____ Subgrid _____ Thick. _____
Grid _____ Subgrid _____ Thick. _____	Grid _____ Subgrid _____ Thick. _____	Grid _____ Subgrid _____ Thick. _____	Grid _____ Subgrid _____ Thick. _____	Grid _____ Subgrid _____ Thick. _____
Grid _____ Subgrid _____ Thick. _____	Grid _____ Subgrid _____ Thick. _____	Grid _____ Subgrid _____ Thick. _____	Grid _____ Subgrid _____ Thick. _____	Grid _____ Subgrid _____ Thick. _____
Grid _____ Subgrid _____ Thick. _____	Grid _____ Subgrid _____ Thick. _____	Grid _____ Subgrid _____ Thick. _____	Grid _____ Subgrid _____ Thick. _____	Grid _____ Subgrid _____ Thick. _____
Grid _____ Subgrid _____ Thick. _____	Grid _____ Subgrid _____ Thick. _____	Grid _____ Subgrid _____ Thick. _____	Grid _____ Subgrid _____ Thick. _____	Grid _____ Subgrid _____ Thick. _____
Grid _____ Subgrid _____ Thick. _____	Grid _____ Subgrid _____ Thick. _____	Grid _____ Subgrid _____ Thick. _____	Grid _____ Subgrid _____ Thick. _____	Grid _____ Subgrid _____ Thick. _____
Grid _____ Subgrid _____ Thick. _____	Grid _____ Subgrid _____ Thick. _____	Grid _____ Subgrid _____ Thick. _____	Grid _____ Subgrid _____ Thick. _____	Grid _____ Subgrid _____ Thick. _____
Grid _____ Subgrid _____ Thick. _____	Grid _____ Subgrid _____ Thick. _____	Grid _____ Subgrid _____ Thick. _____	Grid _____ Subgrid _____ Thick. _____	Grid _____ Subgrid _____ Thick. _____
Grid _____ Subgrid _____ Thick. _____	Grid _____ Subgrid _____ Thick. _____	Grid _____ Subgrid _____ Thick. _____	Grid _____ Subgrid _____ Thick. _____	Grid _____ Subgrid _____ Thick. _____

APPENDIX C

Vendors' Standard Operating Procedures

(To be inserted upon receipt from vendors)

SECTION 2

Results of Evaluation Forms

Results of Evaluation Forms

Integrity Assessment Procedure for Steel USTs

This form tells whether an integrity assessment procedure used to assess steel USTs prior to upgrading with cathodic protection meets the performance standards recommended by the EPA. The evaluation is of a vendor procedure for assessing tank integrity, and was conducted by a third party acting as a consultant to the vendor. The vendor procedure was evaluated according to the Quality Assurance Project Plan (QAPP), "Field Evaluation of UST Inspection Assessment Technologies" of October 1995 or equivalent protocol. The full evaluation report includes a form summarizing the test data.

The evaluation consisted of the vendor applying the procedure to a number of tanks or sites. After the vendor's conclusions were reported, the baseline results were determined by removing the tanks from the ground and inspecting the tanks. The baseline inspection determined that a tank was not suitable for upgrading if the tank had any perforations or had any pits (either external or internal, depending on the assessment procedure) that were deeper than 50% of the required minimum wall thickness for tanks of that size.

Where the UST program implementing agency allows or requires evaluations for compliance, UST owners and operators of steel tanks that have been upgraded by the addition of cathodic protection should keep this form on file to prove compliance with the federal regulations. Tank owners should check with State and local agencies to make sure that this form satisfies their requirements.

Vendor Procedure

Procedure Name _____

Version _____

Vendor Name _____

Vendor Address _____

Vendor Phone _____ Fax _____

E-mail _____

Description of Procedure

This vendor procedure assesses the integrity of a steel UST by (give a brief description below of the operating principles of the procedure):

This procedure is operated in accordance with the following standard operating procedures or national codes (List any applicable procedures and codes below):

Test Conditions During Evaluation

The evaluation used a total of _____ tanks at _____ different sites. The ages of the tanks ranged from _____ years to _____ years with a mean average age of _____ years. Groundwater was found above the bottom of the tank at the time of the evaluation at _____ sites with _____ tanks. The evaluation data included _____ tanks with a minimum wall thickness of 3/16 inch, _____ tanks with a minimum wall thickness of 0.24 inch (1/4 nominal), and _____ tanks with a minimum wall thickness greater than 1/4 inch.

Evaluation Results

List the vendor's criteria for declaring a tank unsuitable for upgrading with cathodic protection. Note that these are the criteria according to the vendor's standard operating instructions, and not the EPA's evaluation criteria. (List below.)

In some cases, assessments done in the normal course of business are not completely conducted only by a single vendor company. Instead, part or all of the assessment procedure is conducted by a licensee or other company or person. The assessments within an evaluation must not have more involvement of the original vendor that is seen in normal practice.

A licensee or other company or person besides the original vendor __ was __ was not involved in the assessments that were a part of this evaluation. If licensee or other company or person was involved, the nature and level of involvement was (describe below):

The evaluation resulted in data summarized in the table below. The data are reported in the Reporting Form for Evaluation Data: Integrity Assessment Procedures for Steel USTs. Note that some assessment procedures report results on a per tank basis, while others report on a per site basis. See the instructions for an explanation of reporting on a per site basis. Indicate by checking the appropriate box which reporting basis was used in this evaluation:

The evaluation data were reported on a ☐ per tank ☐ per site basis.

	VENDOR RESULT (without leak test knowledge)			
BASELINE	SUITABLE	UNSUITABLE	INCONCLUSIVE	TOTAL
SUITABLE				
UNSUITABLE				
TOTAL				

	VENDOR RESULT (after inclusion of leak test results)			
BASELINE	SUITABLE	UNSUITABLE	INCONCLUSIVE	TOTAL
SUITABLE				
UNSUITABLE				
TOTAL				

Note that the performance estimates are to be interpreted as applying on a per tank or per site basis, depending on the way that the data were reported. The results are based on the calculations described in Section 5 of the QAPP "Field Evaluation of UST Inspection Assessment Technologies." Based on the data summarized above obtained during the evaluation, the following performance estimates were found based on the vendor's results after including the results of any leak tests:

1. **Correct Decision Rate** _____%. (This is the number of tanks [or sites] declared suitable by both the vendor and baseline, plus the number declared unsuitable by both vendor and baseline, divided by the total number of tanks [or sites] and converted to percent.)
   The 95% confidence interval was from _____ to _____%.

2. **Proportion of Correct Approvals (Accuracy)** _____%. (This is the number of tanks [sites] declared suitable by both the vendor and baseline, divided by the number found suitable by the baseline tests, converted to percent.)
   The 95% confidence interval was from _____ to _____%.

3. **Proportion of Correct Detections (Reliability)** _____%. (This is the number of tanks [sites] declared unsuitable by both the vendor and baseline, divided by the number found unsuitable by the baseline tests, converted to percent. EPA recommends that this proportion be 95% or greater.)
   The 95% confidence interval was from _____ to _____%.

4. **Proportion of False Alarms** _____%. (This is the number of tanks [sites] declared unsuitable by the vendor but found suitable by the baseline tests, divided by the total number found suitable by the baseline tests, converted to percent.)

The 95% confidence interval was from _____ to _____%.

5. **Proportion of Missed Detections** _____%. (This is the number of tanks [sites] declared suitable by the vendor, but found unsuitable by the baseline tests, divided by the total number found unsuitable by the baseline tests, converted to percent.)

The 95% confidence interval was from _____ to _____%.

6. **Proportion of Inconclusive Results** of total results _____%.

The 95% confidence interval was from _____ to _____%.

7. **Proportion of Inconclusive Results for Suitable Tanks** _____%.

The 95% confidence interval was from _____ to _____%.

8. **Proportion of Inconclusive Results for Unsuitable Tanks** _____%.

The 95% confidence interval was from _____ to _____%.

In order to meet the performance requirements, the proportion of correct detections (the proportion of unsuitable tanks correctly detected as other than suitable) must be at least 95%. The proportion of correct detections is computed as 100% minus the percent reported in number 5 above, and was_____%. Based on the results from this evaluation the procedure (mark applicable box)

☐ **does** meet the performance standards, or

☐ **does not** meet the performance standards.

Limitations on Results

The performance estimates above are only valid when:

- The procedure is performed in accordance with the standard operating instructions used in this evaluation; and
- The procedure has not been substantially changed.

Other limitations specified by the vendor or determined during the evaluation are (list below):

Evaluator Certification of Results

Procedure Name _____
Version _____
Vendor Name _____

I certify that the vendor conducted the assessment of the integrity of steel tanks prior to upgrading with cathodic protection in accordance with the vendor's standard operating procedure.

I also certify that this vendor procedure was evaluated according to the plan in "Field Evaluation of UST Inspection Assessment Technologies" and that the results presented above are those obtained during the evaluation.

I also certify that, outside this evaluation, I and my organization have no financial interests in the vendor company, and that the vendor company has no financial interests in myself or my organization.

Name (person)	Organization performing evaluation
Signature	Address of Organization
Date	Phone

Vendor Certification of Independence

I certify that, outside this evaluation, I and my organization have no financial interests in the evaluator or her or his company, and that the evaluator and her or his company have no financial interests in myself or my organization.

Name (person)	Vendor Organization
Signature	Address of Organization
Date	Phone

Reporting Form for Evaluation Data
Tank Integrity Assessment Procedures for Steel Tanks
(Use as many pages as needed.) Page ____ of _____.
(Indicate whether reported on tank or site basis by circling appropriate word in column 1 or 2)

Tank ID	Site ID	Tank Age	Baseline Results			Vendor Conclusion	
			Perforation (Y/N)	Deepest Pit Depth (Indicate internal or external)	Inspection Conclusion	Without Leak Test	After Leak Test

SECTION 3

Instructions for Filling Out Results Forms

Instructions for Filling out Results Forms

The evaluation is based on the procedures outlined in the "Quality Assurance Project Plan: Field Evaluation of UST Inspection Assessment Technologies" (QAPP) of October 1995, or an equivalent protocol. The standard test procedure document supplements the QAPP and provides instructions for completing the results form for the evaluation of a tank integrity assessment method for steel USTs prior to upgrading with cathodic protection.

Vendor Procedure

In this section, provide the name of the vendor procedure. This is usually a trademarked name. If there is a version of the system or a date, list that under the version. The vendor name is the name of the company that performs the assessment or supplies the specific procedure used by licensees or users. The company's address and phone number should be supplied. An optional FAX number and/or e-mail address could also be supplied.

Description of Procedure

Give a brief description of the type of assessment here. Examples might be an internal video camera or a corrosion model. If the procedure is performed or operated according to an industry standard code or standard operating procedure, give the appropriate reference(s) as the answer in the next section.

Test Conditions During Evaluation

This section documents the conditions and data used in the evaluation. Record the number of tanks investigated and the number of distinct sites. Typically all tanks in a single excavation would be a single site. However if there were two separate tank excavations separated by some distance, this could be two sites even if it was a single address or facility. Report the youngest and oldest age of tanks in the study. Also report the average tank age. If there are tanks with unknown ages, use the best approximation of age in computing the average and the minimum and maximum. Report the number of tanks of different wall thicknesses. If the wall thickness is not known, use the minimum required by the Underwriters Laboratory Standard 58 based on the capacity of the tank.

The QAPP was developed on a per tank basis and called for investigating about 100 tanks. With an average of about 2.5 tanks per site, this would translate to about 40 sites. For procedures that report on a site basis, the evaluation should include at least 42 sites, with at least 21 sites that were determined by the baseline tests to be unsuitable for upgrading. Note that this will probably involve more than 21 tanks at these sites. No minimum requirement is specified for the number of suitable sites. Procedures that report on a per tank basis should include at least 42 tanks, with a minimum of 21 unsuitable tanks as determined by baseline tests.

Evaluation Results

Describe briefly how the vendor determines that a tank is unsuitable for upgrading. For example, the vendor's decision might be based on a visual review of the internal video of the tank, or it might be based on the predicted life of the tank compared to its age based on a corrosion model.

Indicate whether the vendor procedure makes a determination separately for each tank, or whether one decision is made that applies to the site (with possibly multiple tanks). If the vendor reports results on a per site basis, the site as a whole is judged suitable for upgrading by the addition of cathodic protection or the site as a whole is judged unsuitable. If the vendor reports on a site basis, the baseline results must also be reported on a site basis rather than on a per tank basis. For this purpose the baseline testing results are interpreted to mean that a site is ***not*** suitable for upgrading by the addition of cathodic protection if ***any*** of the tanks at the site is not suitable. For a site to be judged suitable for upgrading, ***all*** tanks at the site must be suitable for upgrading with cathodic protection.

The QAPP calls for the vendor to report findings first in the absence of information about whether the tank has passed a leak detection test, and then again using the results of a leak detection test. Correspondingly, the results form has a table for the vendor's conclusions in the absence of knowledge about the leak detection test and a subsequent table for results including that knowledge. The data to be entered in the table are described in detail with examples in Section 5, page 5 of 7, of the QAPP.

Compute the percentages for items 1 though 8 as described in the QAPP, Section 5, pages 5 and 6 of 7, and report them in the indicated blanks. Note that these items are based on the vendor's results ***including*** knowledge of any leak detection test results.

The performance requirements are based on the probability of correct detection. The probability of a correct detection is computed as 100% minus the percent reported in item 5. For example, if item 5 were computed as 2% (based on incorrectly declaring 1 unsuitable tank out of 50 unsuitable tanks as suitable), then the probability of correct detection would be 98%.

Mark the "does" box if the estimated probability of detection is at least 95%. Otherwise, mark the "does not" box.

Limitations on Results

List any and all restrictions or special requirements of the procedure here. For example, if there are any special cleaning requirements for the tanks in preparation to performing the assessment, these should be described here. Similarly, if the evaluation only reflected certain situations, and not the full range of variables that might be encountered in the field, then these should also be described as limitations.

Certification of Results

Repeat the procedure name, version and vendor's name as indicated. Give the name of the person in charge of the evaluation in the first position, followed by the name of the evaluating organization. On the second line, the person in charge of the evaluation should sign the form. This is followed by the address of the evaluating organization. On the next line, enter the date followed by the evaluating organization's telephone number.

Vendor Certification of Independence

The vendor's representative should complete and sign.

Reporting Form for Evaluation Data

The QAPP contains detailed data reporting forms for the baseline inspections of the tanks. The indicated data should be summarized for each tank on this reporting form. This includes the identification of the tank and site, whether or not each tank had a perforation, and the depth of the deepest pit found during the inspection, leading to the inspection conclusion as to whether the tank was suitable or not. Note that a specific procedure is required to assess only one side of the tank shell, but must identify all perforations. The baseline conclusion should be based on the deepest pit found on the same side of the tank shell (interior or exterior) that is assessed by the vendor's procedure. The vendor's conclusions both without knowledge of the leak test results and with that knowledge are also reported. These data form the basis for the tables in the reporting form.

SECTION 4

"Guidance on Alternative Integrity Assessment Methods for Steel USTs Prior to Upgrading with Cathodic Protection" EPA Memorandum

July 25, 1997

UNITED STATES ENVIRONMENTAL PROTECTION AGENCY
WASHINGTON, D.C. 20460
Mail Code 5401G

JUL 25 1997

OFFICE OF
SOLID WASTE AND EMERGENCY
RESPONSE

MEMORANDUM

SUBJECT: Guidance On Alternative Integrity Assessment Methods For Steel USTs Prior To Upgrading With Cathodic Protection

FROM: Anna Hopkins Virbick, Director
Office of Underground Storage Tanks

TO: EPA UST/LUST Regional Program Managers
State UST Program Managers

This memorandum provides guidance that pertains only to a relatively small subset of all underground storage tanks (USTs). This subset of USTs consists of steel USTs that are not yet protected from corrosion, that will not be internally lined to meet the 1998 deadline for corrosion protection, and that will be assessed by alternative methods other than either human-entry internal inspection or leak detection before cathodic protection is added.

In our memorandum of October 21, 1996, we recommended to UST program implementing agencies that they continue to follow their current policies regarding allowed integrity assessment methods for this subset of tanks until more information and guidance became available. On March 6, 1997, we circulated additional information and draft guidance. Today's memorandum finalizes our guidance on this subject. The guidance promotes protective and affordable integrity assessments while maintaining regulatory flexibility for implementing agencies.

Guidance On The Use Of Alternative Integrity Assessment Methods

Federal UST regulations require that existing steel tanks without corrosion protection must be assessed for structural integrity before cathodic protection can be added to meet corrosion protection requirements. Basically, tanks that are not structurally sound must not have their operational lives extended. Specifically, the federal UST regulations at 40 CFR § 280.21(b)(2) state that an assessment method may be used to ensure the integrity of steel tanks prior to upgrading with cathodic protection if the assessment method is listed in the regulations or if the implementing agency determines that an alternative assessment method prevents releases in a manner that is no less protective of human health and the environment than those listed. Today's guidance pertains to determinations of alternative integrity assessment methods that are not listed in the federal regulations.

EPA recommends that implementing agencies determine that an alternative integrity assessment method that meets either Option A or Option B below be considered to prevent releases in a manner that is no less protective of human health and the environment than the methods listed in 40 CFR § 280.21(b)(2)(i) through (iii), which include human-entry internal inspection and, for tanks less than 10 years old, certain leak detection methods.

Option A. **Ensure tank integrity by using an alternative integrity assessment method that is in accordance with a standard code of practice developed by a nationally recognized association or independent testing laboratory.**

Option B. **Ensure tank integrity by using a vendor-supplied procedure that has been successfully evaluated and certified by a qualified independent third party to meet specified performance criteria regarding detection of perforations and detection of either internal or external damage. Within Option B, the criteria for proving tank integrity are as follows:**

1. **Detect *all* perforations; *and***
2. ***One of the following:***
   a) **Detect external pits deeper than 0.5 times the required minimum wall thickness, *OR***
   b) **Detect internal pits deeper than 0.5 times the required minimum wall thickness *AND* any internal cracks or separations.**

To meet a criterion, a method must demonstrate a probability of detection of at least 95 percent and a probability of false alarm of no more than 5 percent.

After March 22, 1998, EPA recommends that implementing agencies approve the use only of alternative integrity assessment methods meeting either Option A or Option B. Before March 22, 1998, agencies should maintain their current policies for alternative integrity assessment methods that do *not* meet either Option A or Option B. Also, before March 22, 1998, agencies should allow upgraded tanks that have used alternative integrity assessment methods meeting either Option A or Option B to select a leak detection method from those available after March 22, 1998 (as discussed below in today's guidance).

This guidance is not intended to discourage the use of human-entry internal inspection as an assessment method or tank lining as an acceptable upgrade option. EPA's UST regulations allow for interior tank lining to be used as an upgrade option for tanks lacking corrosion protection (40 CFR § 280.21(b)(1)). This guidance addresses only § 280.21(b)(2)(iv), which regards methods not specifically listed in the federal regulations.

The Difference Between "Method" And "Vendor-Supplied Procedure"

Option A addresses "integrity assessment methods" and Option B addresses "vendor-supplied procedures." Both "methods" and "procedures" share the common essential task of

verifying the integrity of the tank, but they differ in the guidance as follows. A "method" is a general technology (such as the use of robotic devices or diagnostic modeling) that is in accordance with a standard code of practice. A "vendor-supplied procedure" is an application of a technology, usually marketed as a patented brand name and procedure. Under Option B, a "vendor-supplied procedure" must be successfully evaluated and certified by a third party. However, the guidance does not recommend the certifying of each individual contractor who may be the local provider of a "vendor-supplied procedure."

Option A: Standard Codes Of Practice

Option A recommends that each alternative integrity assessment method comply with a standard code of practice developed by a nationally recognized association or independent testing laboratory. Compliance with a standard code is a requirement in almost all other areas of the federal UST technical regulations. Codes of practice are often updated over time, and so the code used must be the code applicable at the time that the alternative assessment is conducted.

The American Society for Testing and Materials (ASTM) has been the most active code body for alternative integrity assessments. A standard is being drafted by a joint task group under Subcommittees E50.01 on Storage Tanks and G01.10 on Corrosion in Soils. The first draft of the "Standard Guide for Three Methods of Assessing Buried Steel Tanks" was recently balloted, and is very similar to the expired ASTM ES 40, "Emergency Standard Practice for Alternative Procedures for the Assessment of Buried Steel Tanks Prior to the Addition of Cathodic Protection." Since balloting is within G01.10 only, interested parties should contact ASTM's Robert Held at (619) 832-9719 for information about participating in this standard development activity.

Although ASTM committees have been the most active, other nationally recognized associations and independent testing laboratories are not precluded from developing standard codes of practice.

Option B: Evaluation And Certification Process

Option B recommends that each vendor-supplied procedure intended to ensure tank integrity must receive third-party evaluation and certification that it meets criteria for establishing the integrity of a tank. Implementing agencies should allow the use only of those vendor-supplied procedures successfully evaluated and certified by a qualified independent third party to meet specified performance criteria regarding detection of perforations and detection of either internal or external damage.

In an evaluation and certification process, a vendor first contracts with a third party for evaluation. This third party should be a qualified test laboratory, university, or not-for-profit research organization with no financial or organizational conflict of interest. Based on the nature of the performance criteria, evaluations will likely be *qualitative,* but quantitative evaluations also are acceptable. The evaluation is performed first *without* and then *with* information about the leak status of the tank divulged to the vendor. The method's performance characteristics, both with leak data and without, are determined, summarized on a "short form," and certified by the evaluator. Owners and regulators can then use this documentation, along with other information, to make decisions that are right for their particular situations.

We have determined that an independent evaluation and certification process is already available for use in the UST community. This finding is based on discussions with vendors and third-party evaluators and industry's experience with other UST system technologies.

In an evaluation, the determination of whether or not a vendor-supplied procedure meets the criteria *may* be based in part on leak detection data. This is allowed because protectiveness is based on the performance of the complete vendor-supplied procedure, and leak detection results often play a large role in integrity assessments. However, the performance of a vendor-supplied procedure *without* inclusion of leak detection data should still be reported on the short forms for informational purposes.

As is clear from the recommendations, no integrity assessment methods or vendor-supplied procedures that have been in use before March 22, 1998 should be "grandfathered" or considered exempt from following a standard code or from evaluation after March 22, 1998. However, those vendor-supplied procedures that were part of the 1996 field study conducted by EPA's Edison lab can use applicable data generated in that study as part of a more comprehensive evaluation. In addition, even if a company follows a standard code of practice, it may voluntarily put its vendor-supplied procedure through this evaluation process in order to obtain independent third-party documentation of performance characteristics.

Evaluation Protocols For Option B

More detailed information on evaluation can be found in the "Quality Assurance Project Plan" (QAPP) prepared for EPA's engineering study conducted in 1995 and 1996. We consider the original QAPP written for the EPA field study to be a viable, peer-reviewed evaluation test protocol. We recommend that evaluations conducted in accordance with it be considered valid. However, removal and examination as detailed in the QAPP may not be necessary, at least not for all tanks used in an evaluation. An approach that uses data in lieu of physical testing can be used if all relevant data requirements are factored in. An evaluator may choose alternative evaluation protocols or procedures, because of the potentially high cost of following the QAPP to the letter or because of special characteristics of the vendor-supplied procedure under evaluation. (The QAPP calls for an assessment method to be used on approximately 100 tanks, which are then removed from the ground for testing and inspection.) The development of other protocols is not precluded, but rather is encouraged.

We have investigated the EPA/private sector Environmental Technology Verification program, and found that it probably cannot provide assistance in the needed time frame. EPA will not be involved in the writing of additional protocols or in the funding of evaluations. However, EPA staff will be available to comment on draft protocols and to provide guidance to implementing agencies. In addition, we will provide optional summary forms, or "short forms," for the QAPP, as suggested by commenters. These will help industry give implementing agencies and owners relevant information in a consistent and understandable format.

Evaluation Criteria In Option B

The criteria in Option B above are based on those found in the QAPP. On each criterion, methods must demonstrate a probability of detection of at least 95% and a probability of false alarm of no more than 5%. Note that 100% accuracy is not specified. We have found it

protective and cost-effective to rely on a series of multiple, complementary, and high-quality measures to achieve the greatest protection at a reasonable cost.

In addition to a mandatory criterion on perforations, a method must pass evaluation of a criterion for either external or internal damage. We structured the criteria in this way based partly on consistency with internal (human-entry) inspection standard codes. In addition, these criteria are based on our belief that not allowing the upgrading of tanks with either significant interior or exterior damage (unless they are repaired) yields significant benefits over the costs incurred. We do not believe, however, that the additional cost of assessing a tank for both internal and external damage provides a net benefit in significantly greater protection.

A criterion for loss of wall thickness over a wide area of the tank is not included, because our research found that failures due to uniform corrosion are very rare. Likewise, a criterion for tank deformation is not included, because it is generally found to be an issue only in fiberglass tank installations.

Recommended Commencement Date

Setting the recommended commencement date of March 22, 1998 allows time for standards to be developed and evaluations to be conducted, and comes before a significant portion of the anticipated assessment work. We extended the date proposed in our draft guidance in response to comments requesting more time. ***Note: the December 22, 1998 deadline for all existing UST systems to meet spill, overfill, and corrosion protection requirements will not be extended.***

Monthly Leak Detection Not Required

We earlier proposed to include stand-alone monthly leak detection monitoring in combination with the integrity assessment options. However, this monitoring is no longer part of our recommendation for integrity assessment methods fulfilling Option A or vendor-supplied procedures fulfilling Option B. We deleted monthly monitoring based on technical merit, consistency, and simplicity. We believe that if an integrity assessment method complies with either a standard code of practice or evaluation procedures as described above, then leak detection monitoring beyond that required in the federal regulations is not warranted on a nationwide basis, and we have not found performance data that indicates otherwise. In addition, deleting the additional monitoring brings all assessment methods in line with each other and simplifies the compliance picture.

If the implementing agency follows today's guidance, compliant USTs (correctly upgraded through alternative assessment, cathodic protection, protected piping, and spill/overfill protection) could follow the requirements of § 280.41(a)(1) allowing either stand-alone monthly monitoring or, for up to ten years, the combination of inventory control and tightness testing every five years. Note that the period during which this combination leak detection method is valid may be less than 10 years if the tank itself meets the 1998 standards for corrosion protection before other UST system components meet 1998 standards for spill, overfill, and corrosion protection, as clarified in our memorandum of July 25, 1997, "Applicability Of A Combination Leak Detection Method For Upgraded Underground Storage Tanks."

Recommendation Against Leak Detection As An Integrity Assessment

The question of whether leak detection alone should be used to assess older tanks prior to upgrading with cathodic protection has been raised from time to time. We received numerous comments on this subject, nearly all in agreement that leak detection alone is not sufficient. Although we recognize the important role leak detection generally plays and allow the use of leak detection results in evaluations of integrity assessment methods, EPA does not recommend that leak detection alone be considered sufficient to assess the integrity of USTs 10 years old or older.

State Program Approval

A decision either to adopt or not adopt EPA's recommendations regarding integrity assessment would not affect the status of state program approval or of an application for approval. This is because EPA is providing recommendations only and not amending its regulatory criteria for state program approval.

Federal And State Consistency

We hope this guidance is accepted by implementing agencies because there are benefits to having consistency across jurisdictions. However, EPA recognizes that State and local requirements may differ from Federal requirements. We have included in Attachment 1 additional items that implementing agencies may consider in developing their integrity assessment policies.

Guidance Intended To Ensure Quality Of Integrity Assessments

EPA believes today's guidance will benefit the UST community and protect human health and the environment by ensuring quality alternative integrity assessments that can lead to extended operational life of older steel tanks. Option A can ensure that alternative integrity assessment methods are valid by being in accordance with national codes of practice. Option B can ensure that vendor-supplied procedures have met rigorous third-party evaluation and certification. However, for these Options to be most successful, UST owners will need to be informed to use only methods that meet code or vendor-supplied procedures that have been certified. Implementing agencies should make concerted attempts to inform their UST owners about what they need to look for to make sure they get a reliable integrity assessment.

Acknowledgments

Our March 6 draft guidance package sought input on the general approach, specific evaluation criteria, costs of evaluations, compliance and enforcement implications, and timing. I thank the state and EPA representatives who provided comments to our draft, including those from Arizona, District of Columbia, Michigan, Tennessee, and EPA's Office of General Counsel. I also thank the many other individuals and organizations that provided comments.

Disclaimer

EPA's Office of General Counsel advises that the policies set out in this document are not final agency action, but are intended solely as guidance. They are not intended, nor can they be relied upon, to create any right, benefit or trust responsibility, enforceable by any party, in litigation with the United States.

cc: EPA UST/LUST Regional Program Managers' Supervisors
OUST Program Directions Team
OUST Desk Officers
Betty Arnold, OUST Compendium
Carolyn Esposito, EPA NRMRL, Edison, NJ
Daniel Sullivan, NRMRL, Edison, NJ
Kathy Nam, EPA OGC
Joan Olmstead, EPA OECA
Larry Magni, American Petroleum Institute
Dennis Rounds, Chair, ASTM Subcommittee E50.01
Susan Canning, ASTM Staff Liaison, Committee E50
Richard Huriaux, DOT Office of Pipeline Safety
Shelley Leavitt Nadel, NACE International
Marc Katz, National Association of Convenience Stores
Chappell Pierce, OSHA Directorate of Safety Standards Programs
Bob Renkes, Petroleum Equipment Institute
John Huber, Petroleum Marketers Association of America
Mark Morgan, Petroleum Transportation & Storage Association
Roy Littlefield, Service Station Dealers of America
Tom Osborne, Society of Independent Gasoline Marketers of America
John Worlund, Converse Environmental Consultants Southwest
James Bushman, Bushman and Associates
Michael Baach, Corrpro Companies
George Kitchen, International Lubrication and Fuel Consultants
Derick Sharp, National Leak Prevention Association
John Piazza, Southern Cathodic Protection
Bud Mattox, Tanknology-NDE
Warren Rogers, WRA Environmental

ATTACHMENT 1

ADDITIONAL ITEMS FOR CONSIDERATION IN DEVELOPING INTEGRITY ASSESSMENT POLICIES

Agencies that implement underground storage tank programs may find the following items useful in conjunction with EPA's guidance in constructing their integrity assessment policies:

* Requiring certain documentation be submitted by vendors to UST owners or implementing agencies (or both). An example for human-entry assessments following NLPA 631 is Form CF-2, "Internal Inspection Affidavit," which must be maintained by the owner, according to the standard. An example for an alternative assessment would be a certification by the vendor that the work meets code or a short form summarizing the evaluation and limitations of a particular method.
* Requiring that companies, individuals, or both be licensed in order to perform assessments.
* Requiring monthly stand-alone leak detection monitoring following assessment and upgrade.
* Limiting the time between assessment and upgrade (for example, limit the time to six months).
* Putting mechanisms in place to make the vendor responsible for a tank failure due to improper assessment.
* Reviewing each vendor-supplied procedure before allowing it to be used, even if a vendor claims the procedure complies with a standard code of practice, to ensure the procedure meets all requirements of the code and of the agency.

G:\Share\OUST\TechIsue\IntegAss\I_A_Gui11.wpd