EPA 520/1-89-003

USER'S GUIDE FOR THE COMPLY CODE

(Revision 2)

U.S. ENVIRONMENTAL PROTECTION AGENCY
Office of Radiation and Indoor Air
401 M Street, S.W.
Washington, DC 20460

October 1989

Printed on Recycled Paper

TABLE OF CONTENTS

Section		Page
1.0	INTRODUCTION	1-1
2.0	HOW TO SET UP YOUR SYSTEM	2-1
2.1	Making a Working Copy	2-1
2.2	Running the COMPLY Program	2-2
2.3	Choosing Where to Start	2-3
2.4	Warning Messages	2-3
2.5	Output	2-3
3.0	DETAILED INPUT GUIDANCE	3-1
3.1	Overview	3-3
3.2	Format for Entering Numerical Values	3-4
3.3	Beginning Message	3-4
3.4	Output to Printer or File	3-4
3.5	Title	3-5
3.6	Title Page	3-5
3.7	Level	3-5
3.8	Number of Release Points	3-5
3.9	Nuclide Names	3-7
3.10	Concentration and Possession Tables	3-9
3.11	Release Rates	3-11
3.12	Release Height	3-11
3.13	Building Height	3-12
3.14	Same Building	3-12
3.15	Stack Diameter	3-14
3.16	Volumetric Flow Rate	3-14
3.17	Distance from Source to Receptor	3-15
3.18	Building Width	3-15
3.19	Building Length	3-15
3.20	Stack and Air Temperatures	3-17
3.21	Wind Speed	3-17
3.22	Distances to Sources of Vegetables, Milk, and Meat	3-19
3.23	Wind Rose	3-20
3.24	Multiple Release Points	3-25
4.0	OUTPUT	4-1
REFERENCES		5-1

TABLE OF CONTENTS (continued)

Section		Page
Appendix A	- How to Handle Errors	A-1
Appendix B	- Sample Problems	B-1
Appendix C	- Obtaining and Organizing Wind Rose Data	C-1
Appendix D	- Suitability of Wind Rose Data from an Offsite Location	D-1
Appendix E	- List of Nuclides	E-1
Appendix F	- Determination of Distances Between Release Point and Receptor When Both Are on the Same Building	F-1
Appendix G	- Meteorological Model	G-1
Appendix H	- Dose Calculations	H-1
Appendix I	- Resolving Problems and Contacting the EPA	I-1

LIST OF FIGURES

No.		Page
3-1	Stack and Building Heights	3-13
3-2	Distance Between Source and Nearest Receptor or Farm	3-16
3-3	Building Width and Length	3-18
C-1	Sample Graphical Wind Rose	C-6
F-1	Measuring Distances on Building Surfaces	F-2
I-1	EPA Regional Offices	I-2

TABLE OF CONTENTS (continued)

LIST OF TABLES

No.		Page
2-1	Input Parameters Required for Various Methods	2-4
3-1	Abbreviated Sample Wind Rose	3-25
C-1	Sample Wind Direction Versus Wind Speed Tabulation	C-7
C-2	Sample STAR Data	C-8
C-3	Sample STAR Data	C-9
C-4	Tabular Form of Graphic Wind Rose	C-10
C-5	Average Wind Speeds for Each Class	C-10
C-6	Wind Rose Data Suitable for Use in the COMPLY Code	C-11
C-7	Form for Wind Rose Data	C-12
H-1	Parameters Used in NCRP and COMPLY	H-4
I-1	EPA Regional Program Managers	I-3

1.0 INTRODUCTION

The COMPLY computer program may be used to demonstrate compliance with the National Emission Standards for Hazardous Air Pollutants (NESHAPS) in 40 CFR 61, Subpart I. It has various levels of complexity, the simplest being a computerized version of the tables of concentration and possession limits in EPA89. The most complicated is an air dispersion calculation using a wind rose.

At all levels, the program will determine whether you are in compliance with the standards, or whether you exceed the standards.

The program is designed to be easy to run and requires only minimum input. As it proceeds, it asks for the information it needs, and if at any point the program determines that you meet the exemption limits, it will stop and tell you. If you do not meet the exemption limits at one level, COMPLY will allow you to go to the next higher (more complicated) level. At the end, the program will create a report containing all the input values and the results of its calculations. This report, along with the supporting documentation described in EPA89, is all that you need to send to the EPA if you are required to report.

2.0 HOW TO SET UP YOUR SYSTEM

COMPLY requires an IBM PC or PC-compatible computer having at least 512 kilobytes of memory, either two floppy disk drives or one floppy disk and a hard disk, and a printer. The operating system must be DOS.

The following instructions are written for the novice PC user. We ask the expert user to be patient with some of the long explanations.

2.1 MAKING A WORKING COPY

In the following explanation, we assume that the hard disk (if one exists on your system) is named "C:", the first floppy disk drive is named "A:", and the second floppy disk drive (if one exists) is named "B:". This configuration is fairly standard. If your system is not set up this way, you will have to adapt these instructions accordingly.

The program and data files are on two 360 kilobyte diskettes; one marked COMPLY-EXE and the other COMPLY-DATA.

If you have a hard disk, put the COMPLY-EXE diskette in drive A, type A:INSTALL, and press Enter. Once the first diskette has been copied, you will be asked to put the COMPLY-DATA diskette in. This will result in the program and all the data being copied onto the hard disk. It will create a directory called C: COMPLY and a batch file, which will start the program when you give it the command COMPLY. (You do not have to know anything about directories or batch files to run COMPLY.)

If you have two floppy disk drives but do not have a hard disk, put the COMPLY-EXE diskette in drive A: and a blank diskette in drive B:. Use the DOS DISKCOPY command to copy all the information on the original diskette to the blank diskette:

```
DISKCOPY A: B:
```

When the first diskette has been copied, remove both it and the copy. Put the COMPLY-DATA diskette in drive A: and another blank diskette in drive B:. Then use the DISKCOPY command to copy the information to the blank diskette.

2.2 RUNNING THE COMPLY PROGRAM

If you are using a hard disk, start the program by typing COMPLY. If you are not using the hard disk, place your copy of the COMPLY-EXE diskette in drive A: and your copy of the COMPLY-DATA diskette in drive B:. If the default drive is B:, simply type COMPLY and press enter to start; otherwise, type B:COMPLY and press enter.

After a short delay (while the program is transferred from the disk into memory), a message will appear on the screen telling you how to proceed.

A detailed description of each input parameter is given in Section 3. Table 2-1 is a list of these parameters, with a brief indication of when each is needed. Not shown in Table 2-1 are responses that require you to choose between two options; for example, whether you want the input values of your release rates to be in curies per year (Ci/yr) or curies per second (Ci/s).

2.3 CHOOSING WHERE TO START

To decide where you want to start, see Section 3.1, Overview, and EPA89. If you believe that you will be exempt at level 1 using the possession or concentration tables, start at level 1; otherwise, go directly to level 2. If you decide to begin at level 2, before you start, gather as much of the information listed in Table 2-1 as you think you will need. Then just follow the instructions on the screen. If you are not particularly familiar with computers, practice running the sample problem in Appendix B first.

2.4 WARNING MESSAGES

Each input parameter (except for the release rates, concentrations, and annual possession amounts) has a "normal range." If you enter a value outside this range, the program will ask you if you want to change the value. If you enter N for no, it will proceed; if you enter Y for yes, it will allow you to go back and change the value of that parameter. This feature is intended to minimize typing errors.

2.5 OUTPUT

The first page of the output is a cover sheet containing the facility name and other identifying information. Succeeding pages reproduce the information you gave the program and the results of its calculations. At level 1, you are told whether or not you are in compliance. At levels 2, 3, and 4, the doses are printed, along with a statement as to whether or not you are in compliance with the standard.

Table 2-1. Input Parameters Required for Various Methods

Parameter	Needed at Levels	Default Value
Nuclide names	1-4	None
Concentrations	1	None
Annual possession amounts	1	None
Release rates	1-4	None
Release height	2-4	None
Building height	2-4	None
Stack or vent diameter[A]	2-4	None
Volumetric flow rate (m^3/s)[A]	2-4	0.3
Distance from source to receptor	2-4	None
Building width[B]	2-4	None
Wind speed[C]	2-4	2
Distances to sources of food production (farms)[D]	3-4	None
Stack temperature (°F)[E]	4	55
Ambient air temperature (°F)[E]	4	55
Wind rose[F]	4	None
Building length[G]	4	None

Notes:

A. Needed at levels 2 and 3 only if source and receptor are on the same building. Needed at level 4 if source and receptor are on the same building or if stack height is more than 2.5 times the building height.

B. Needed only if stack height is less than or equal to 2.5 times the building height.

C. At level 4, needed if user has not specified a wind rose.

D. At level 3, there are two farms--one for vegetables and one for milk and meat. At level 4, there are three farms--one each for vegetables, milk, and meat.

E. Needed only if stack height is greater than 2.5 times the building height.

F. Needed only if user has specified he wants it.

G. Needed only if stack height is less than or equal to 2.5 times the building height and the user has specified a wind rose.

3.0 DETAILED INPUT GUIDANCE

3.1 OVERVIEW

The following instructions may seem complicated at first; this is because we have tried to cover every contingency. It may be wise to start running the program using the sample problem (Appendix B) as a guide and read the explanation as you proceed. This will make the explanation more concrete, not just an abstract set of instructions.

The program will ask you for input as it is needed. It will begin by asking whether you want the output to go to a file or to the printer. It will then ask for information regarding your company and facility. Next it will ask if you wish to use the possession or concentration limit tables. If you are in compliance at this level, you may go to a higher level to determine whether you are exempt. If you exceed the exemption limits, it will ask if you wish to go to the next level.

The program has three levels of complexity beyond the possession or concentration limit tables. Level 2 is the lowest, requiring a minimum of input, and level 4 is the highest, requiring the most input. (Levels 2 and 3 correspond to the NCRP Screening levels 2 and 3. NCRP Screening Level 1 is not used. See NCRP89.) While the higher levels require more input, they have less conservatism built into the dose estimate. Thus, even if the dose estimate at level 2 exceeds the limit, you may be able to demonstrate compliance at level 3.

You may start at any level; however, we recommend you begin at the lowest level, because the lower the level at which you meet the standard, the fewer input numbers you have to supply and justify. Moreover, all the input you supply at the lower levels (except at the possession or concentration limit level) will be saved for use at the higher levels, so that you do not have to enter the values more than once.

Under certain unusual circumstances, the dose calculated at level 3 may be slightly higher than that calculated at level 2. For example, this can occur if all the receptor's food is grown at home and the dose from one or more of the radionuclides is dominated by the food pathways. This is an artifact of the NCRP method, which was deliberately kept very simple so that it could be done by hand.

At level 4, you are given the choice of whether to put in a wind rose. If you choose not to, the results at level 4 will quite possibly be about the same as those at level 3.

If the calculated dose at any level is less than the compliance limit, you may proceed to the next level to see whether you are exempt. If you are in compliance, but not exempt, you must report your results to the EPA. If you cannot demonstrate compliance after having tried all levels, contact your regional EPA office (see Appendix I).

A few of the input parameters have default values. However, if you have site-specific values for these parameters, we strongly recommend that you use them,

because the default values are generally quite conservative and will therefore result in higher dose estimates.

Each of the input parameters is described below. They are presented in the order in which the program most commonly asks for them. Once a value has been requested and supplied, the program will not ask for it again when you move to higher levels.

If you decide to stop while you are running the program, simply hold down the Ctrl key and press the Break key (on IBM keyboards, this is also the Scroll Lock key), and the program will stop. The Ctrl and C keys will also stop the program. If you do stop, you lose all of the data entered up to that point and must start over from the beginning.

3.2 FORMAT FOR ENTERING NUMERICAL VALUES

The program allows you to enter numerical values in different ways. For example, to enter 1400, you may type either 1400, 1400., 1.4e3, 1.4E3, 1.4e+3, 1.4E+3, or 1.4+3. To enter 0.012, you may type 0.012, .012, 1.2e-2, 1.2E-2, or 1.2-2.

> NOTE: The lower case L is not a numeral 1 as it is on typewriter keyboards. You must use the "1" key.

The following formats are <u>NOT</u> correct: 1,400, 1.4x10+3, 012, and 1.2x10-2. If you type 1,400, the program will not recognize this as 1400, but it will not give you an error message. It will ignore everything after the comma and treat the value as 1. The program will read

012 as 12, not .012. The other two incorrect forms will result in an error message.

> NOTE: If you recognize an error before you press the Enter key, you may correct it using the backspace key (the left-pointing arrow key on the upper right of the keyboard).

After you type in the value, you must press the Enter key. Only then will the machine recognize that you have given it the value it has asked for. If the program is looking for a numerical value and you press Enter without giving it one, it will not proceed but will simply wait for you to give it the value. It will not ask you for it again; it will simply stare back at you.

3.3 BEGINNING MESSAGE

The first thing that will show on your screen is an introductory message with a brief description of the code. To continue, simply press the Enter key.

3.4 OUTPUT TO PRINTER OR FILE

The program first asks you whether you wish to have your output sent directly to the printer or stored in a file on a disk. If you choose the printer, the output will be printed as you go along. You must have your printer turned on, or the program will not run. If you choose to have your output sent to a file, the program will ask you for a file name. If you want the output file to be stored on a disk other than the default disk, you must supply the name of the disk drive along with the file name (e.g., B:REPORT.DAT) to store it on drive B.

Before printing the results, align the paper in the printer so that the output will not overlap from page to page; align the top of the sheet with the print head. Turn the printer off momentarily and then back on. (Some printers will advance the paper to the position it was in when the printer was first turned on.)

3.5 TITLE

The program asks you to type in a title for your problem. You may type in anything you like, up to 78 characters and numbers.

3.6 TITLE PAGE

You will be asked to supply your company name, the name of your facility, its address, and the name and telephone number of a contact person.

3.7 LEVEL

The program will ask you if you wish to use either the concentration or possession table. If you choose not to use the concentration or possession limit option, or if you exceed the limits in these tables and choose to go to a higher level, the program will ask you which level (2-4) you desire. We suggest you start at level 2, the simplest level, but you may start at any level you desire.

3.8 NUMBER OF RELEASE POINTS

The program will ask if you have more than one release point. If the response is Y for yes, it will then ask

how many release points (stacks or vents*) there are. If you have more than one, you may be able to run them all in one problem, or you may have to make several runs. (See the discussion in Section 3.24, Multiple Release Points.) If you do not have any stacks or vents (the emissions are through windows and doors), type in a 1.

Each release point in a problem is treated individually; that is, you must supply the release rates, release height, building height, etc., for each point. It is very important to keep track of which parameters go with each release point. We strongly suggest that you fill out Worksheet D in the guidance document (EPA89).

If you have many release points and would like to reduce bookkeeping requirements, you may assume that all the radionuclides from your facility are released from the stack or vent having the potential for causing the highest dose. Similarly, you may assume that all the release points from a building can be replaced by a single stack or vent having the potential for causing the highest dose. In either case, the stack or vent having the potential for causing the highest dose must be determined by running COMPLY with a unit release of any one of your radionuclides from a selection of stacks or vents. The selection should be based on factors such as distance to the receptor, building configuration and meteorological data if a wind rose is used. If you consolidate releases, you must make the stack or vent height no greater than the building height.

*The code does not distinguish between stacks and vents. We include both terms here simply to make it clear that both are covered.

Alternative procedures for consolidating releases may be used if you have approval from the EPA.

3.9 NUCLIDE NAMES

The program will ask you for the name of each radionuclide emitted from your facility. If you are going to use the concentration table and the same nuclide is released from more than one stack or vent, put in its name only once.

The program will ask if you want to put the list of radionuclides from the keyboard (K) or from the file (F). If this is the first time you are running the code, type "K" for keyboard. The program will then ask you if you want to save your entries in a file. If you answer yes, it will ask you for a file name. It requires a different file name for each release point; thus you must be prepared to supply as many file names as release points. For example, if you have three release points, you may choose NUCS1.DAT, NUCS2.DAT and NUCS3.DAT. If you want to save the files on a drive other than the default drive; the file names must include the drive on which they are to be saved (i.e., A:NUCS1, etc. to save them on drive A).

Note that you cannot create or modify them using an editor or a word processor. Their creation must be from the keyboard, and any modifications must be carried out using COMPLY. You can change the file name using DOS. We suggest that you use the file option as it will save you from having to re-enter the nuclide names each time you run the program. The program allows you to add or remove entries if you wish. If you add or remove entries, however, you cannot save the modified file under its old name; you must give it a new name.

If you are going to use the possession table and a nuclide exists in more than one physical form (gas, liquid, or solid), you should enter its name as many times as it has physical forms. (See EPA 88.)

The names must be of the form CS-137 for cesium-137, CO-60 for cobalt-60, and so on. They may be in upper- or lower-case letters or a mixture of the two. The dash (-) is a necessary part of the name. If the nuclide has an M following the atomic weight, it must be included as well (e.g., AG-110M). If a nuclide is not included in the data tables supplied with the program, the program will tell you. If you make a mistake typing the name (e.g., CA-137 for CS-137), the program will respond "I can't find that nuclide." So you should check your typing before assuming that you have a nuclide that is not on the list in Appendix E. If you really do have a nuclide that is not on the list, contact your EPA regional office. (See Appendix I.)

If daughters are released along with their parent, they, as well as the parent, must be included on your release list. That is, if you are releasing SR-90, you may be releasing its Y-90 daughter. The program automatically handles the ingrowth of daughters <u>after</u> release of the parent.

The program will display the "inhalation class" along with the nuclide names. This is the default lung clearance class used by the program. You may change this; however, if you do you MUST COMPLETELY JUSTIFY your choice in the documentation included with your report. Changes to the lung clearance class should only

be made if you have data supporting the decision. If you have changed the clearance class, the fact that you have will be highlighted in the output.

After you have typed in all the nuclide names, enter a blank line (just press the enter key) or type END to indicate that you are finished. The program will then display your input and ask if it is correct. If it is, the program will proceed. If there is an error, the program will allow you to make changes.

Note that if you make changes, you must rename the nuclide file (unless that is its initial creation).

3.10 CONCENTRATION AND POSSESSION TABLES

If you choose the concentration limits, the program will ask if anyone lives within three stack diameters. If you answer yes, you cannot use the concentration table. If you answer no, the program will ask for the concentration of each nuclide. This is the average annual concentration in the stack. If a given nuclide is released from more than one stack or vent, proceed as follows: Determine which stack has the maximum concentration of a given nuclide and for that stack enter the actual concentration. For the other stacks in which that nuclide has a lower concentration, enter a zero for the concentration of that nuclide. For example, if stack one has a Kr-85 concentration of 1.0 Ci/cubic meter and stack 2 has a concentration of 1.5 Ci/cubic meter, enter 0 for stack 1 and 1.5 for stack 2. Once you have entered the concentrations and confirmed that they are correct, COMPLY will then determine if you meet the compliance limits given in EPA89.

The possession table option is similar to the concentration option except that there are more questions. These deal with whether an individual lives closer than 10 meters from the release point and whether food is produced within 100 meters of the release point. If the answer to either of these questions is yes, you are not allowed to use the possession limit table, and the program will ask if you want to go to a higher level. It will ask for the possession quantities by stack. You do not have to identify the quantities by stack unless you want to. You may associate all the quantities with one stack if you wish, putting in all zeros for the other stacks.

COMPLY will then ask for the annual possession quantity of each radionuclide you identified earlier and the physical form of each radionuclide (gas, liquid or powder, or solid). (See EPA89.) You will also be asked if each radionuclide is exposed to a temperature greater than 100 °C (212 °F), or boils at a temperature less than 100 °C (212 °F). If so, the form of the nuclide will be changed to a gas, no matter what form you have entered. As with the concentration limits, you will be given an opportunity to correct any wrong entries.

Refer to Worksheet F of EPA89 to determine if you are exempt from reporting, in compliance, or not in compliance. If you are in compliance but not exempt, you may wish to go to a higher level. This gives you the chance to determine if you meet the exemption limit using levels 2-4.

3.11 RELEASE RATES

If you use levels 2-4, the program asks you whether you want to put in release rates in Curies/year or Curies/second. After you have told it which you want (Y for years, S for seconds), it will ask you for the release rates from each release point one at a time, by nuclide. (See the worksheets in EPA89 for instructions on how to estimate release rates.) When the release rates have been specified for each stack or vent, the program will show on the screen what you have put in and ask you if the values are satisfactory. If you don't like what you see, enter an N and the program will instruct you on how to fix the incorrect values. If you enter a Y, it will proceed to the next step.

3.12 RELEASE HEIGHT

If you have multiple release points, and have not completed Worksheet D of EPA89, we suggest you do so. It is a useful way to keep track of all your stack parameters if you have more than one stack or vent. The release height is the elevation view distance (in meters) from the ground to the point of release (the top of the stack or vent, regardless of whether the stack is on a building or is a separate structure). (See Figure 3-1.) If the release is from a vent on the side of the building, the release point is the elevation view distance from the ground to the center of the vent. If there is more than one stack or vent, see the discussion on multiple release points in Section 3.24. If the release is not from a stack or vent, enter zero for the release height.

NOTE: The program checks for "unusual" values for the release height and many of the other parameters. If you enter a value that is outside the "usual" range (smaller or larger), it will ask you if you want to change it. If the value is indeed correct, simply answer N for no and the problem will proceed using the value you put in. If it is incorrect, the program will let you change the value.

3.13 BUILDING HEIGHT

This is the height (in meters) of the building from the ground to the roof. Do not include the stack or vent height in the building height even if the stack or vent is on the building. (See Figure 3-1.) The stack or vent height may be less than the building height (e.g., a vent from the side of a building). If you enter a release height that is less than the building height, the computer program will ask you to verify that this is what you want, because it is fairly unusual and the program wants to confirm that you have put in the correct numbers. If the numbers are correct, enter Y and continue. If you have inadvertently entered a wrong number, enter N and the program will ask you again for both the release height and building height.

3.14 SAME BUILDING

If the release height is less than 2.5 times the building height, you will be asked if the source and receptor are on the same building. If they are, enter Y; if not, enter N. While it is unlikely that the source and receptor would be on the same building, it is possible, for example, to have a small laboratory in an apartment building.

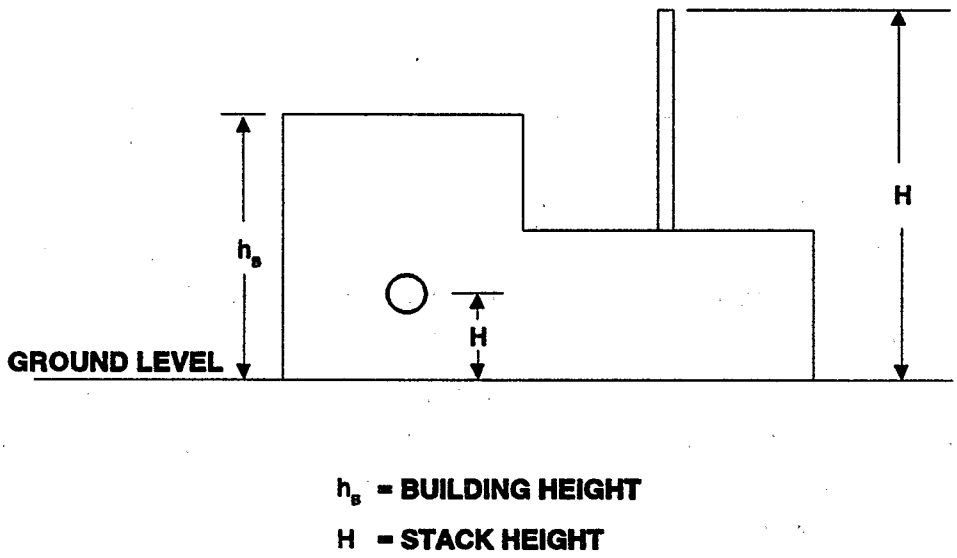

Figure 3-1. Stack and building heights

3.15 STACK DIAMETER

You may or may not be asked for the inside diameter (in meters) of the stack or vent. At levels 2 and 3, this number is needed only if the source and receptor are on the same building. At level 4, it is needed if the source and receptor are on the same building or if the stack is greater than 2.5 times the building height, in which case it is used to estimate plume rise. If the stack or vent is other than circular, determine its equivalent circular diameter from $D = (1.3A)^{1/2}$, where A is the flow area of the stack.

3.16 VOLUMETRIC FLOW RATE

You may be asked for the volumetric flow rate from the stack or vent [cubic meters per second (m^3/s)]. The logic of when you are asked for this is the same as for the stack diameter. There is a default value of 0.3 m^3/s. If you do not know the volumetric flow rate, you may use this default value. To convert from cubic feet per minute (ft^3/min) to m^3/s, multiply ft^3/min by 4.7×10^{-4}.

This is the volumetric flow rate out of the <u>stack</u>. If the temperature of the air flowing through the stack is significantly different from that of the air flowing through the fan, the volumetric flow rate up the stack will be different from that through the fan. With a 100 °F temperature difference, the difference could be on the order of 20 percent. If there is more than one stack or vent, see Section 3.24.

3.17 DISTANCE FROM SOURCE TO RECEPTOR

If the source and receptor are not on the same building, this is the straight-line distance (in meters) from the source to the nearest receptor measured along the ground. (See Figure 3-2.) If the source and receptor are on the same building, it is the shortest distance between the source and receptor measured along the building surfaces. (See Appendix F.) At level 4, if you choose to put in a wind rose, you must also supply the straight-line distance to the nearest receptor for each of 16 sectors. This is discussed in the description of the wind rose in Section 3.23.

3.18 BUILDING WIDTH

If the stack height is less than 2.5 times the building height, you will be asked to supply the building width (in meters). When there is no wind rose (levels 2 and 3 and level 4 without a wind rose), this is the plan view dimension perpendicular to a line from the release point to the closest receptor. (See Figure 3-3.) In Figure 3-3, W is the actual width, but W_B is the dimension to use when there is no wind rose. At level 4 with a wind rose, the "width" is either W or L (one of the two plan view dimensions). (See Figure 3-3 and the following discussion of building length.)

3.19 BUILDING LENGTH

At level 4, if you put in a wind rose and the stack height is less than 2.5 times the building height, you will be asked for the building length (in meters). This

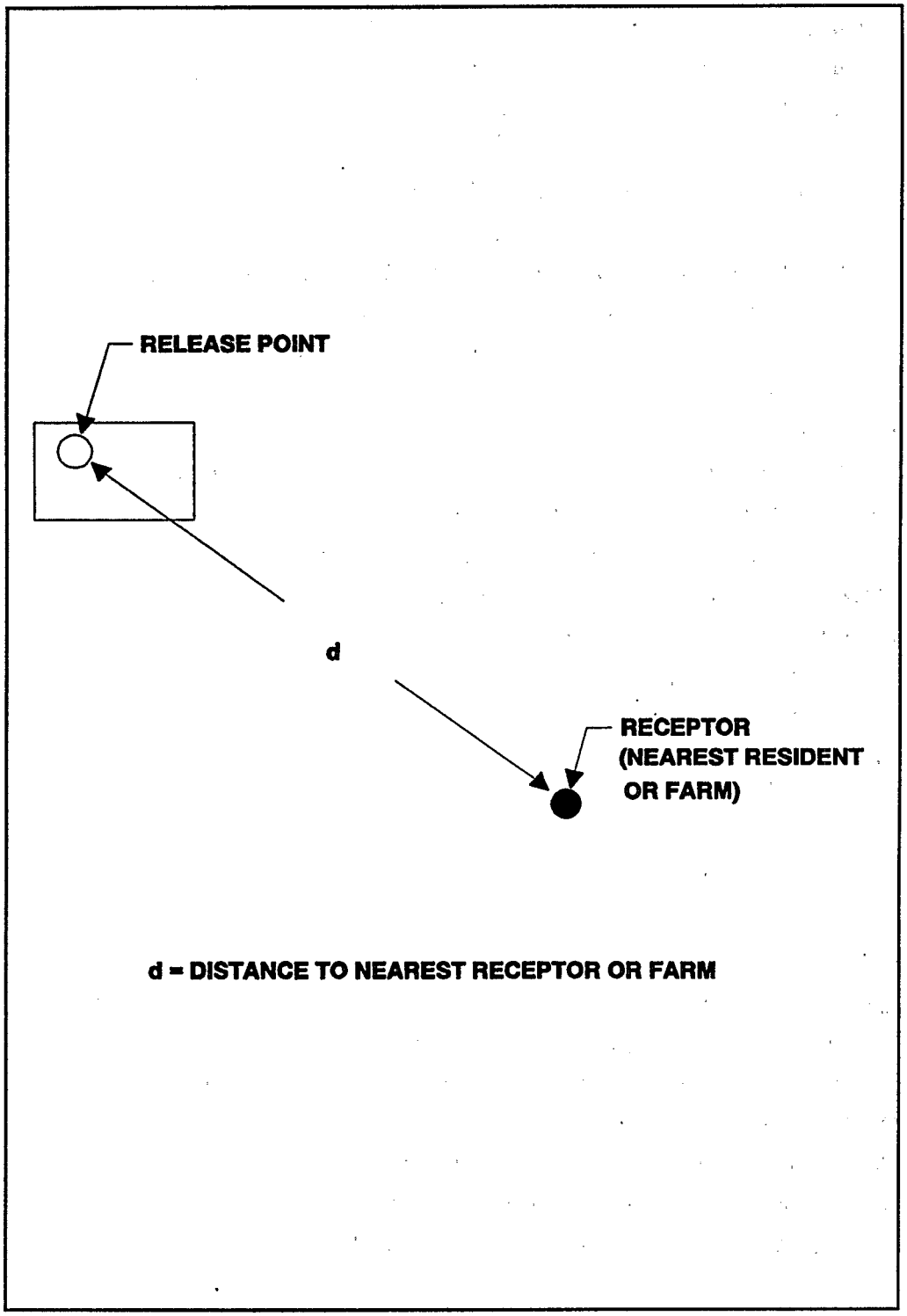

Figure 3-2 Distance between source and nearest receptor

"length" is the dimension perpendicular to the dimension supplied in Section 3.18. (See Figure 3-3.) It can be equal to the width already put in at levels 2 or 3 if that is the smaller dimension.

3.20 STACK AND AIR TEMPERATURES

At level 4, if the stack height is greater than 2.5 times the building height, the program will ask you for the annual average air temperature in degrees F. This has a default value of 55 °F. The program will then ask for the stack temperature in degrees F. This, too, has a default value of 55 °F. If you choose the default values for both of these temperatures, the plume rise due to buoyancy effects will be zero. It is to your benefit to put in the actual temperatures, because buoyant plume rise can significantly increase the effective stack height. The stack temperature must be equal to or greater than the air temperature. If it is not, the program will ask you to re-enter the stack temperature.

3.21 WIND SPEED

The program will ask if you want to use the default wind speed of 2 m/s. This is the annual average wind speed (m/s) without regard to the wind direction. It is used at levels 2 and 3 and at level 4 if you do not put in a wind rose. If you do not know the wind speed, you may use the default value; however, this is fairly conservative. If you do not want to use the default value, the program will ask you for your value.

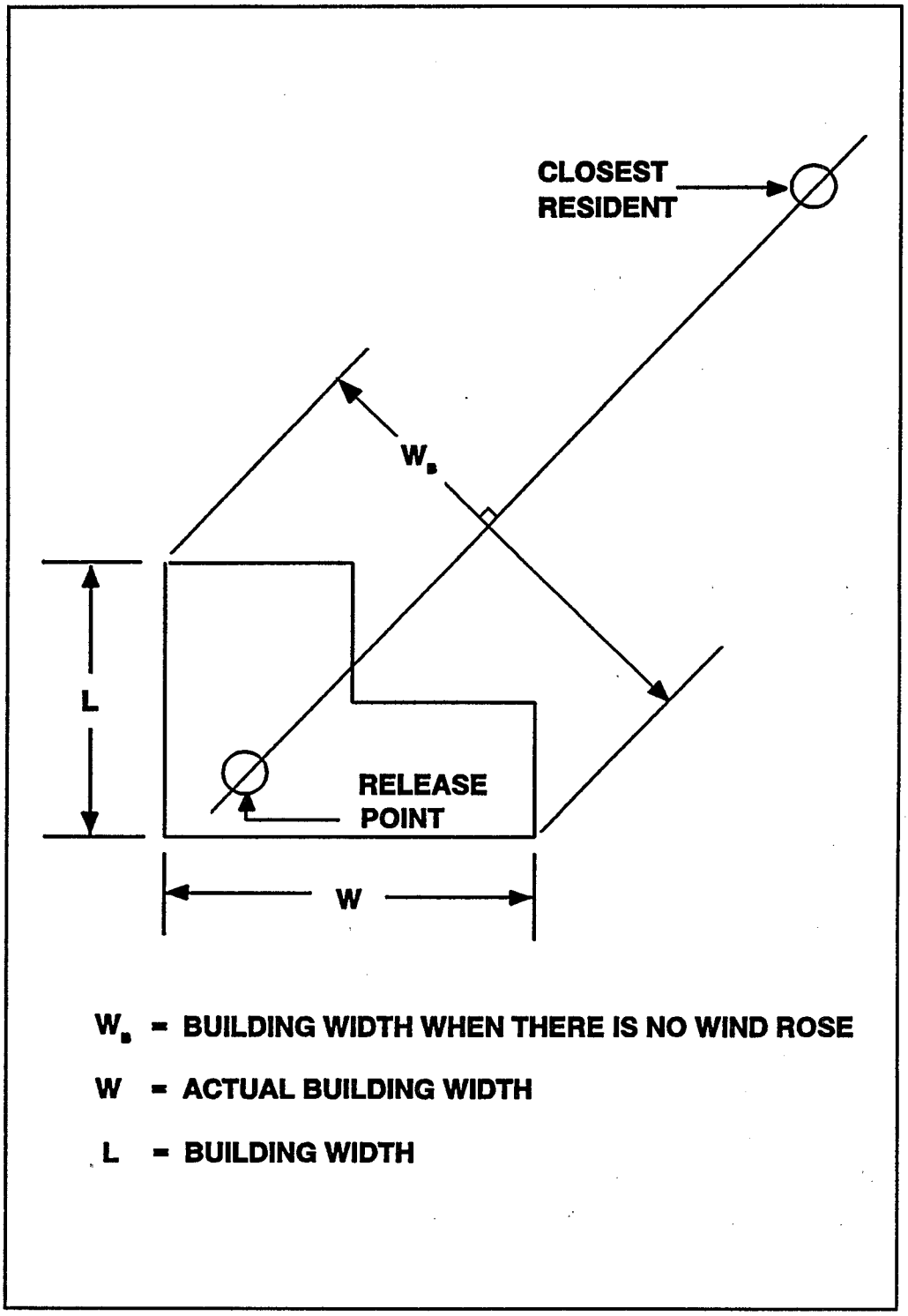

Figure 3-3 Building width and length

3.22 DISTANCES TO SOURCES OF VEGETABLES, MILK, AND MEAT

At level 3, you will be asked to supply the distances to two kinds of farms--one producing vegetables and one producing both milk and meat. If the receptor can produce significant quantities of either vegetables or milk and meat at home, enter an H; otherwise, type in the distance to the nearest potential location for the production of that commodity. If the receptor is on the same building as the release, the program allows vegetables, milk, and meat to be produced on the building. However, because this is a rare situation, the program asks if you want to change the value. If you do, enter Y. The program will ask you for the distance again, and you can enter the distance to the nearest potential location where that commodity can be produced.

The guidelines on the locations are as follows: There are two scenarios. The first is that the source of emissions is in a location where it is not possible to produce a significant quantity of a given food at the location of the receptor. This could be an urban setting where local zoning laws or lack of proper land makes it impractical for the receptor to produce a significant fraction of his diet. Or it could be a rural setting in which the climate or terrain makes it impossible to raise local crops. The second scenario is the case in which the receptor is able to produce a given commodity at his home. Whether he actually does so is moot. If he is able to, then it must be assumed that he does. You must be prepared to justify whichever scenario you choose. Obviously, the more conservative the scenario, the easier it is to justify.

Level 4 is similar to level 3 except that there are three types of farms: vegetables, milk, and meat. Thus you must supply up to three distances (which may be equal). The directions to the farms are not required, because the computer searches for the direction in which the concentration is at a maximum. The location chosen at level 3 for the production of vegetables will be carried forward to level 4; thus, if you ran a problem at level 3 and then moved on to level 4, you will not be asked again where vegetables are produced. In addition, at least one of the two distances for milk production and meat production at level 4 must match the distance supplied at level 3 for the farm producing both milk and meat.

3.23 WIND ROSE

A wind rose is a table showing how frequently the wind blows from a given direction with a given speed. At level 4, you will be asked if you wish to put in a wind rose. At levels 2 and 3 (and at level 4 if you do not choose to put in a wind rose), the wind is assumed to blow toward the receptor 25 percent of the time. This is conservative, because at most sites the maximum frequency for a given direction is about 10-15 percent. If you choose to put in a wind rose, enter Y; if not, enter N.

If you choose to use a wind rose, then the program will ask you for a distance table for each release point. The distances correspond to the directions <u>FROM</u> the release point <u>TO</u> the closest receptor in each of 16 sectors and must be greater than zero. (See Figure 3-2.) You may put these distances in from the keyboard (following the instructions on the screen) or you may

set up distance files ahead of time and use these. If you put them in from the keyboard, the program will create files for you so that you do not have to enter them again if you re-run the problem.

Before the program creates each file, it will ask you for a file name. The name you give it should include the disk drive you want it on (if other than the default drive). For example, if you want to call the file STKDISK.DAT and you would like it to be on drive B, you would type B:STKDISK.DAT. To put it on the default drive, you would type only STKDISK.DAT. The DAT extension (.DAT) makes it easy to identify your data files. If there is already a file by that name, the program will ask you for a different name. You will need to supply one set of distances for each release point.

Wind rose data can be obtained from several sources: on-site measurements, a local meteorological station (usually at the local airport), and the National Climatic Data Center in Asheville, North Carolina. See Appendix C for a description of data available from the National Climatic Data Center and how to put such data in the form needed here.

If you do not have an on-site meteorological tower, you must use data from another source. In general, the data must be from measurements made at a location meeting the guidelines given in Appendix D. However, specific exceptions might be made on a case-by-case basis, depending on how close the dose estimates are to the limits and the similarity of the terrain in the local area to the terrain where the data were collected. The

data should either be for the period covered by the assessment or be long-term average data (covering at least 5 years). The averaging period does not have to include the assessment period.

Meteorologists have adopted the convention of presenting these data in terms of the direction the wind is blowing from, for each of 16 sectors. This can easily lead to errors when supplying the wind rose data. Before you start the problem, check to make sure that your wind rose data and your distances are in the form of FROM rather than TO. Embarrassing errors have been caused by putting in wind rose data that were exactly the reverse of what the user thought they were.

If you indicate that you want to put in a wind rose, then the program will ask you whether you want to put it in from a file or from the keyboard. The first time you run the code, you must put in the wind rose data from the keyboard.

Before asking you for the wind rose data, the program will ask you to provide the following information:

1. The source of the data;
2. The dates covered;
3. The location where the measurements were made;
4. The distance from your facility to the measurement location; and
5. Units for the wind speed (just follow the instructions on the screen).

The source of the data might be one of those listed above, e.g., the National Climatic Data Center. The dates covered correspond to the period during which the meteorological measurements were made. The location of the measurements is the name of the weather station, and the distance is the distance from your facility to that weather station.

The program next asks you for the percentage of calms. Usually given on wind roses, this represents the period of time the wind speed is less than (generally) 3 mph. If it is not given, check your source of data to see if it has been factored in. If the calms have been factored into the data, enter a zero for the fraction of calms when the program asks for it.

Wind speed data are usually given in either miles per hour (mph) or knots, and the program requires meters/second (m/s). The conversion factors are as follows:

To obtain m/s from mph, multiply mph by 0.45.

To obtain m/s from knots, multiply knots by 0.51.

The program will ask you what your wind speed units are and will do the conversion for you. All the instructions for entering the wind rose data will appear on your screen. We suggest that you have the data ready when you are asked for it. To that end, Table C-7 in Appendix C is supplied for use in preparing your wind rose data. When the data have all been entered, they will be displayed on the screen, and you will be asked if they are correct. If you answer Y for yes, the computer will use the data you typed in to create

a wind rose file. This is done for your convenience, so that if you want to re-run the problem for some reason, you do not have to put in the wind rose data again. If the wind rose is not correct, answer N for no, and the program will give you instructions for fixing it.

These restrictions apply to the values for the distances, frequencies, and wind speeds:

- All the frequencies (except for calms) must be greater than zero.

- The sum of all the frequencies (including calms) must be between 0.99 and 1.01.

- All the wind speeds must be greater than 0.1 meter/second.

Before the program creates the file, it will ask you for a file name. The name you give it should include the disk drive that you want it on (if other than the default drive). For example, if you decide to name the file WINDROSE.DAT and you would like it to be put on drive B, then you would type in B:WINDROSE.DAT. If you want to put it on the default drive, you need type only WINDROSE.DAT. It is handy to put a DAT extension (the DAT) on all data files to make it easy to identify them.

When you run a problem and tell the computer you want to use a wind rose file, the program will ask you for the file name. If the file is not on the same disk as the program, you must tell the program where it is. For

example, if the default drive is drive C and the wind rose file is called ROSIE.DAT on drive B, you would type B:ROSIE.DAT. If the source and receptor are on the same building surface, the wind rose is used only for estimating the air concentration at the farms.

An abbreviated version of a wind rose is given in Table 3-1.

Table 3-1. Abbreviated Sample Wind Rose

Wind FROM	Frequency	Speed m/s
Calm	0.063	---
' N '	0.022	2.1
'NNE'	0.034	3.2
.	.	.
.	.	.
.	.	.
'NNW'	0.042	2.5

Whether you enter the wind rose from a file or from the keyboard, the program will print it out and ask you if it is correct. If you enter Y for yes, it will proceed with the problem. If you enter N, the program will allow you to fix it. The instructions will appear on the screen.

3.24 MULTIPLE RELEASE POINTS

The way you handle multiple release points depends in part on whether you are using a wind rose. When you have multiple release points, you must supply the distance from each release point to each receptor.

3.24.1 MULTIPLE RELEASE POINTS WITH NO WIND ROSE

Option 1. If you are running levels 2 or 3, or level 4 without a wind rose, you may run multiple stacks in one problem. The program adds the dose to the closest individual from release point 1 to that from release point 2, and so on. This will overestimate the dose if different individuals in widely separated locations are exposed to the various release points, because Option 1 assumes the same individual is in all the locations at once.

Option 2. The other option is to run N separate problems if there are N release points, and use the multiple stack option. This method is more complicated; however, it eliminates the conservatism inherent in Option 1. The method is best explained by the table below, which illustrates the procedure for three release points.

Release Point	Receptor a	Receptor b	Receptor c
1	$D(x_{1a})$	$D(x_{1b})$	$D(x_{1c})$
2	$D(x_{2a})$	$D(x_{2b})$	$D(x_{2c})$
3	$D(x_{3a})$	$D(x_{3b})$	$D(x_{3c})$
Sum	D_a	D_b	D_c

In this table, receptor a is the closest receptor to release point 1, receptor b to release point 2, and so on. The distance x_{1a} is the distance from release point 1 to receptor a, x_{1b} is the distance from release point 1 to receptor b, and so on. The dose $D(x_{1a})$ is the dose to receptor a from stack 1, and so on. The total

dose D_a to receptor a is the output from problem a, D_b the output from problem b, and so on. Each of the three columns represents a single problem. You will not see the individual doses $D(X_{1a})$, etc., only the totals (D_a, D_b, and D_c). The dose to be reported is the maximum of D_a, D_b, or D_c.

3.24.2 MULTIPLE RELEASE POINTS WITH A WIND ROSE

Option 1. The first option is to run one multistack problem. This will require a distance file for each stack but only one wind rose file. All of the meteorological parameters will be the same; only the distances from the release points to the receptors will be different. This is similar to the first option for multiple release points with no wind rose, because it is as if the person lives in all the worst locations for all release points.

Option 2. The other option is to run 2N problems for N release points. This will require 2N sets of distances. If you choose this option, you must do the following:

1. Run a single-stack problem for release point 1 using the actual distances from the release point to the nearest receptors in all 16 sectors. This will give you the dose from stack 1 to receptor 1 (the receptor receiving the highest dose from release point 1) and will tell you which sector he lives in.

2. Having done step 1, determine from the output the location of receptor 1. Create new distance files for release point 2, 3, etc., setting all the distances except the one in the direction from each

release point to receptor 1 to a very large number (we suggest 10^6 meters). This will prevent the program from calculating the dose to someone in a sector other than the one of interest. For each distance file in the direction of receptor 1, put in the actual distance from receptor 1 to the release point. Then run this problem using the multiple stack option. This gives you the dose to receptor 1 from all the release points.

3. Repeat steps 1 and 2 for the remaining release points to get the doses to receptor 2 from release points 1, 2, 3, etc. The dose to use in determining whether or not you are in compliance is that of the problem having the highest total dose from all the release points.

4.0 OUTPUT

The output is self-explanatory. The input is printed out just as you entered it. You should use Worksheet F of EPA89 to determine whether you are exempt from reporting, in compliance, or not in compliance.

If you elected to have the output sent to a printer, it will appear there automatically. (You must have the printer turned on.) If you chose to have it sent to a file, you may examine the file on the screen or you may print it out. One way to examine the file on the screen is to use the MORE command. If the file is named MYOUT on drive A, type in

```
MORE  A:MYOUT
```

This will result in the file being displayed on the screen 23 lines at a time. You can see 23 more lines by pressing any key. The next 23 lines will then scroll up. In this way, you can work your way through the file (but only from front to back).

If you want to print the file, make sure the printer is turned on and that the top of the sheet is lined up with the printhead. Then type

```
PRINT A:MYOUT
```

This will cause the file to be printed.

REFERENCES

BAKER76, Baker, D.A., Hoenes, G.R., and Soldat, J.R., "FOOD--An Interactive Code to Calculate Internal Radiation Doses from Contaminated Food Products," Proc. of Conference on Environmental Modeling and Simulation, EPA 600/9-76-016, April 19-22, 1976, Cincinnati, Ohio, July 1976.

BRIGGS84, Briggs, G.A. "Plume Rise and Buoyancy Effects," in Atmospheric Science and Power Production, Darryl Randerson, Ed., U.S. Department of Energy, 1984.

BRIGGS86, Memo from G.A. Briggs, U.S. Environmental Protection Agency, to D.A. Baker, Battelle-Pacific Northwest Laboratories, 1986.

DOE88, "External Dose-Rate Conversion Factors for Calculation of Dose to the Public," U.S. Department of Energy, July 1988.

EPA79, "AIRDOS-EPA: A Computerized Methodology for Estimating Environmental Concentrations and Dose to Man from Airborne Releases of Radionuclides," EPA 520/1-79-009, U.S. Environmental Protection Agency, Office of Radiation Programs, 1979.

EPA83, "Background Information Document, Proposed Standards for Radionuclides," EPA 520/1-83-001, U.S. Environmental Protection Agency, Office of Radiation Programs, Washington, DC, March 1983.

EPA88, "Federal Guidance Report No. 11: Limiting Values of Radionuclide Intake and Air Concentration and Dose Conversion Factors for Inhalation, Submersion, and Ingestion," EPA 520/1-88-020, U.S. Environmental Protection Agency, Office of Radiation Programs, September 1988.

EPA89, "A Guide for Determining Compliance with the Clean Air Act Standards for Radionuclide Emissions from NRC-Licensed and Non-DOE Federal Facilities" EPA 520/1-89-002, U.S. Environmental Protection Agency, Office of Radiation Programs, October 1989.

EPA89a, "Background Information Document, Environmental Impact Statement for Proposed NESHAPS for Radionuclides, Volume I, Risk Assessment Methodology," EPA 520/1-89-005, U.S. Environmental Protection Agency, Office of Radiation Programs, October 1989.

IA82, "Generic Models and Parameters for Assessing the Environmental Transfer of Radionuclides from Routine Releases," Safety Series No. 57, International Atomic Energy Agency, Vienna, 1982.

KASNER56, Kasner, E. and Newman, J., Mathematics and the Imagination, Simon and Schuster, New York, 1956.

NCRP89, "Screening Techniques for Determining Compliance with Environmental Standards," NCRP Commentary No. 3, National Council on Radiation Protection and Measurements, Revision of January 1989 with Addendum of October 1989.

NELSON87, Personal communication with Dr. C. Nelson of the Office of Radiation Programs, U.S. Environmental Protection Agency, 1987.

SCA89, "An Analysis of the Uncertainties in the Risk Assessment Performed in Support of the NESHAPS for Radionuclides", S. Cohen and Associates, McLean, VA,. September 1989.

SKRABLE74, Skrable, K.W., et al., "A General Equation for the Kinetics of Linear First Order Phenomena and Suggested Applications," Health Physics, 27, 155, 1974.

WILSON82, Wilson, D.J. and Britter, R.E., "Estimates of Building Surface Concentrations from Nearby Point Sources," Atmospheric Environment, 16, 11, 2631, 1982.

APPENDIX A - HOW TO HANDLE ERRORS

In most cases, if you make an incorrect entry, the program will tell you what is wrong and allow you to correct it. In some cases, the program cannot identify the error. In those cases, we have programmed the machine to suggest possible problems, but finding the difficulty is up to you. These types of problems are covered here. We have included here all the potential difficulties anticipated. If you encounter one that is not on the list, please notify your EPA Regional Office.

1. MACHINE DOES NOT RESPOND AFTER YOU HAVE TYPED IN VALUE

Have you pressed Enter? You must press Enter to have the machine digest your answer to its question.

Have you pressed Enter without typing in a value? If the program wants you to type in a number, and you just press Enter, it will wait patiently for you to enter a number.

2. ERROR MESSAGE: "There is something wrong with your input value..."

You may have made a typographical error. Try typing in the value again. Be sure to use the proper format. You may have used the lower case "L" for a numeral 1. Unlike most typewriters, the computer keyboard has a separate key for the numeral 1.

You may have entered a value using an improper format.

The program allows you to enter numerical values in a number of different ways. For example, to enter 1400 you may type either 1400, 1400., 1.4e3, 1.4E3, 1.4e+3, 1.4E+3, or 1.4+3. To enter 0.012, you may type 0.012, .012, 1.2e-2, 1.2E-2, or 1.2-2.

The following formats are <u>NOT</u> correct: 1,400 or 1.4x10+3, and 012 or 1.2x10-2.

If you type 1,400, the program will not recognize this as 1400, but it will not give you an error message. It will ignore everything after the comma and treat the value as 1. The program will read 012 as 12, not .012. The other two incorrect forms will result in an error message.

3. <u>ERROR MESSAGE:</u> "<u>I can't find (file name). It's not on the default drive...</u>"

The data files supplied with the program must be on the default drive. If for some reason they are not there, you will get this error message and the program will stop.

The following are the names of the data files that are supplied with the program; and must be on the default drive:

HALFLIFE.DAT, INDX.DAT, NUCS.DAT,
TABLE2.DAT, TABLE21.DAT, TABLE22.DAT, TABLE3.DAT,
TABLE5.DAT, TABLE7.DAT,
TABLEB2.DAT,
TABLEC5.DAT, TABLEC6.DAT, TABLEL4.DAT,
TITLE.DAT, TREE.DAT, XMPTCON.DAT, XMPTPOS.DAT

Check your diskette(s) to make sure that the files are all there by using the directory command (if the original diskette is in drive A, this is DIR *.DAT) and then set up your system again as described in Section 2 in the main part of this guide. If some files are missing, order a new copy of the program and data files.

If you do not have a hard disk, check your original diskettes to see if all of the above files are there. Assuming they are there, follow the instructions given in Section 2.1, "Making a Working Copy." Be sure to put the COMPLY-EXE diskette in drive A: and the COMPLY-DATA diskette in drive B:.

If the missing file is your wind rose or distance file, check to see that it has the name you think it has and that it is on the disk drive you think it is on. If the name is not what you thought it was, or it is on a different drive, start over and give the program the correct file name when asked. If it is not on the default drive, you must tell the machine where it is. For example, if the default drive is drive A or C, and the wind rose file is named WINDROSE.DAT and is on drive B, then you must enter B:WINDROSE.DAT when the machine asks you for the file name.

4. <u>ERROR MESSAGE FOR DISTANCE OR WIND ROSE FILE:</u>
   (a) "There is something wrong with DATA line..."
   (b) "Error at line *** in GETWRF..."
   (c) "Error at line *** in GETWDF..."

You should never get these messages. If you do, delete the file that is causing the problem (by typing DEL file name) and start over using the program to make a new file.

APPENDIX B - SAMPLE PROBLEMS

The sample problem that follows is intended to show the output from COMPLY and how the results can change from level to level.

The problem starts with the use of the Possession Table (Level 1). At this level the facility is not in compliance. The problem for Levels 2 and 3 is the same as the sample problem given in NCRP Commentary No. 3 (NCRP89). The facility is in compliance at both of these levels, the dose at Level 3 being slightly less than Level 2. Level 4 shows the use of wind rose and separate locations for the production of milk and meat. Note that the significantly lower dose at Level 4 is not necessarily typical.

COMPLY: V1.5d.

40 CFR Part 61
National Emission Standards
for Hazardous Air Pollutants

REPORT ON COMPLIANCE WITH

THE CLEAN AIR ACT LIMITS FOR RADIONUCLIDE EMISSIONS

FROM THE COMPLY CODE, VERSION 1.5d

Prepared by:

ABC Corporation
XYZ Site
1000 Main St., Short Pump, VA 12345

J. Jones, Health Physicist
(123) 456-7890

Prepared for:

U.S. Environmental Protection Agency
Office of Radiation Programs
Washington, D.C. 20460

COMPLY: V1.5d.

Test

SCREENING LEVEL 1

DATA ENTERED:

Annual possession limits used.

Nuclide	Annual Amount (ci/year)	Physical Form
I-131	2.00E-03	Gaseous
SE-75	2.00E-03	Gaseous
SR-85	3.50E+00	Liquid

NOTES:

Input parameters outside the "normal" range:

None.

RESULTS:

You possess 4.0 times the allowable amount given in the possession table.

*** Failed at level 1.

COMPLY: V1.5d.

Test

SCREENING LEVEL 2

DATA ENTERED:

Nuclide		Release Rate (curies/SECOND)
I-131	D	3.200E-10
SE-75	W	1.600E-09
SR-85	Y	9.400E-09

Release height 25 meters.
Building height 20 meters.

The source and receptor are not on the same building.

Distance from the source to the receptor is 200 meters.

Building width 50 meters.

Default mean wind speed not used.
Mean wind speed is 3.00 m/sec.

NOTES:

Input parameters outside the "normal" range:

None.

RESULTS:

Effective dose equivalent: 6.7 mrem/yr.

Effective dose equivalent: 0.6 mrem/yr due to Iodine.

*** Comply at level 2.

COMPLY: V1.5d.

Test

SCREENING LEVEL 3

DATA ENTERED:

He produces his own VEGETABLES at home.

Distance from the SOURCE to the FARM producing MILK and MEAT is 2000 meters.

NOTES:

Input parameters outside the "normal" range:

None.

RESULTS:

Effective dose equivalent:	3.0 mrem/yr.
Effective dose equivalent:	0.1 mrem/yr due to Iodine.

*** Comply at level 3.

COMPLY: V1.5d.

Test

SCREENING LEVEL 4

DATA ENTERED:

Building length 50 meters.

STACK DISTANCES, FILE: c:\comply\staktest.dat

DIR	Distance (meters)
N	240.0
NNE	270.0
NE	230.0
ENE	240.0
E	280.0
ESE	220.0
SE	220.0
SSE	210.0
S	200.0
SSW	225.0
SW	230.0
WSW	210.0
W	220.0
WNW	220.0
NW	230.0
NNW	250.0

COMPLY: V1.5d.

WINDROSE DATA, FILE: c:\comply\windtest.dat

Source of wind rose data: Nat. Climatic Data Center
Dates of coverage: 1975-1980
Wind rose location: Richmond, VA
Distance to facility: 15 Miles

Percent calm: 0.12

Wind FROM	Frequency	Speed (meters/s)
N	0.053	4.10
NNE	0.029	3.90
NE	0.029	3.80
ENE	0.033	3.90
E	0.041	3.90
ESE	0.039	4.20
SE	0.041	3.90
SSE	0.033	3.90
S	0.051	4.00
SSW	0.049	4.50
SW	0.086	4.90
WSW	0.118	5.40
W	0.104	5.40
WNW	0.073	5.40
NW	0.059	4.90
NNW	0.043	4.50

Distance from the SOURCE to the FARM producing MILK is 2500 meters.

Distance from the SOURCE to the FARM producing MEAT is 2000 meters.

NOTES:

The receptor exposed to the highest concentration is located 240. meters from the source in the ENE sector.

He produces his own VEGETABLES at his home.
He gets his MEAT from a farm located 2000. meters from the source in the ENE sector.
He gets his MILK from a farm located 2500. meters from the source in the ENE sector.

Input parameters outside the "normal" range:
None.

COMPLY: V1.5d.

RESULTS:

Effective dose equivalent: 0.2 mrem/yr.

Effective dose equivalent: 6.0E-03 mrem/yr due to Iodine.

*** Comply at level 4.

This facility is in COMPLIANCE.

It may or may not be EXEMPT from reporting to the EPA.

You may contact your regional EPA office for more information.

********** END OF COMPLIANCE REPORT **********

APPENDIX C - OBTAINING AND ORGANIZING WIND ROSE DATA

As noted in the body of this report, there are three possible sources of wind rose data: (1) on-site measurements, (2) a local weather station (usually located at airports), and (3) the National Climatic Data Center in Asheville, North Carolina (telephone 704-259-0682).

If you do not have an on-site meteorological tower, you must get wind rose data from another source. See Appendix D for guidelines as to what constitutes acceptable data.

For off-site data, we recommend that you contact the National Climatic Data Center because (1) they have trained personnel who can advise you regarding the locations for which they have data, (2) it is fairly easy to put their data in the proper form, and (3) data are available for several hundred locations around the country. Data from local airports may not have been reduced to usable form; that is, the measurements may be hourly or daily, which would mean you would have to consolidate between about 400 and 9000 data points for one year. Moreover, the airport data may already be in the National Climatic Data Center data base.

Three kinds of data are available from the National Climatic Data Center: Wind Direction Versus Wind Speed Tabulations, STability ARray (STAR) data, and Wind-Ceiling-Visibility data. Each of these is discussed below.

C.1 WIND DIRECTION VERSUS WIND SPEED TABULATIONS

If the National Climatic Data Center has one of these tabulations available that is suitable for your site, we

recommend that it be your first choice, because it is already in the form you need. Table C-1 is a sample tabulation; the last two columns are what you use to create your wind rose.

C.2 STABILITY ARRAY (STAR) DATA

The second kind of data available from the National Climatic Data Center is the so-called STAR data. These data (or their equivalent) are fairly extensive, but a subset can be used for COMPLY. The data are on tape or hard copy. Unless you have access to a tape reader, you should not order the tape. The data consist of 13 tables; only the last 2 are of interest here. The next-to-last column of the next-to-last sheet contains the average wind speed (in knots) for each sector. The last column of the last sheet contains the fraction of the time the wind blows from each direction.

> NOTE: The calms are distributed among the frequencies, so that if you use the STAR data you should put in a 0 for calms when you run COMPLY.

Tables C-2 and C-3 show the organization of the last 2 of the 13 STAR tables. The appropriate columns are marked.

While the STAR data are as convenient as the Wind Direction Versus Wind Speed Tabulations, not as many locations have been put into this data base. Thus, you may not be able to find data from a nearby location.

C.3 WIND-CEILING-VISIBILITY DATA

The Wind-Ceiling-Visibility data are, for the most part, 30-year averages (1948-1978). Compiled for the Federal Aviation Administration, they are not in the exact form required for use in COMPLY. They consist of both tables and graphs. The graphic data are in the form shown in Figure C-1. The tabular data supplied with the graphic data are not useful for your purpose. You must use the data from the graphic wind rose to construct a table of wind speeds and frequencies.

To construct your table from Figure C-1, follow this procedure.

The numbers inside the segments represent the percentage of the time that the wind blows <u>from</u> a particular direction within a range of wind speeds. The speed range lies between the values shown on the concentric circles in the sector marked N.

In the sector marked N, the first of the concentric circles has a 4 on it. This represents the lower limit of the wind speed. The next concentric circle has a 13 on it. Inside the segment bounded by these two sectors is a 4.3. This means that 4.3 percent of the time the wind is from the north, with a speed between 4 and 12 miles per hour. The convention is to use the lower value as the lower limit of the range and the higher value minus 1 mi/h as the upper limit. The calms are given in the innermost circles (0-3 mph).

From the graph in Figure C-1, we can construct Table C-4.

To construct the simplified wind rose needed for the COMPLY program, we need the average wind speed from each direction and the fraction of the time the wind blows from that direction. The average wind speeds for each class are as given in Table C-5.

We first sum the frequencies in each sector to get the fraction of time the wind blows from that direction; i.e.,

$$f_i = \sum_j f_{ij} \quad ,$$

where f_{ij} is the frequency of the time the wind speed in sector i is in class j.

To compute the average speed for the sector, we multiply the average speed in each class by its frequency, sum them, and divide by the sum of the frequencies in that sector.

$$U_i = \sum_j (u_j f_{ij}) / \sum_j f_{ij} = \sum_j (u_j f_{ij}) / f_i \quad ,$$

where U_i is the average wind speed in sector i, and u_j is the average wind speed for class j (from Table C-4).

This is not the true average speed for the sector, because we did not account for calms. The program will ask you for the fraction of the time the wind is calm (in this case, 0.118) and make the correction for you.

An example of a calculation is as follows: with the wind from the north, the sum of the frequencies is 4.3 + 0.8 + 0.2 = 5.3, and the average wind speed is (8x4.3 + 14x0.8 + 17x0.2)/5.3 = 9.2.

The result of these operations for the sample data is given in Table C-6. The last column has the wind speed in m/s, the unit required for COMPLY. The conversion factor is m/s = mi/h times 0.447.

Table C-7 is provided to assist you in preparing the wind rose data.

FIGURE C-1 SAMPLE GRAPHICAL WIND ROSE

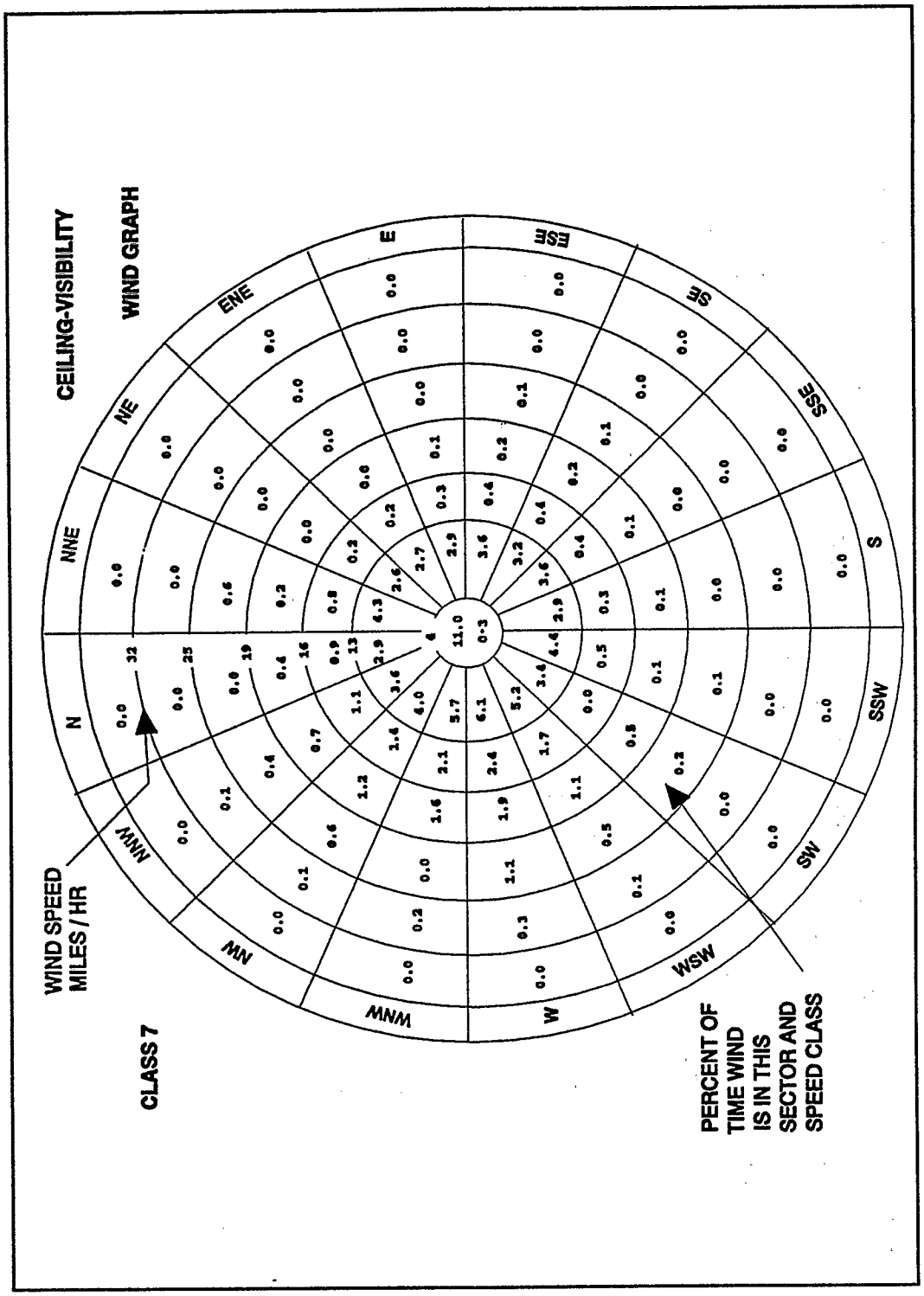

Table C-1 sample Wind Direction Versus Wind Speed Tabulation

WIND DIRECTION VERSUS WIND SPEED

STATION NAME/NAMBER Hypothetical/12345 DATA Frequency PERIOD OF RECORD 1965-9174

SPEED GROUPS IN MPH

Mo	Code	Speed / Dir	0-3	4-7	8-12	13-15	16-18	19-24	25-31	32-38	39 & Gr.	Total	Percent	Avg. Speed
AN		N	769	1491	1186	302	149	85	41	15		4038	13.8	7.8
		NNE	477	1137	670	137	50	29				2500	8.6	7.3
		NE	348	808	347	35						1538	5.3	6.3
		ENE	277	435	69	3	1					785	2.7	5.0
		E	424	373	43	4	2	3				849	2.9	4.4
		ESE	330	235	43	10	4	7	2			631	2.2	4.7
		SE	268	222	114	70	56	27	2	1		760	2.6	7.5
		SSE	357	467	560	547	513	255	47	3		2749	9.4	11.8
		S	642	1070	1067	513	374	156	15	1		3838	13.1	9.3
		SSW	286	390	228	56	25	7	1			993	3.4	6.6
		SW	335	309	126	33	10	2				815	2.8	5.5
		WSW	396	366	120	12	1					895	3.1	5.0
		W	507	765	325	35	3					1635	5.6	5.7
		WNW	456	919	462	30	7					1874	6.4	6.0
		NW	397	609	252	29	11	7	1			1306	4.5	5.9
		NNW	416	670	235	70	75	37	21	15		1539	5.3	7.0
		Calm	2471									2471	8.5	
Total			9156	10266	5847	1886	1281	615	130	35		29216	100.0	6.8
Percent			31.3	35.1	20.0	6.5	4.4	2.1	0.4	0.1				

MO : AN = Annual; 1 = January; 2 = February; .....; 12 = December.
CODE : Blank = All Weather; 10 = VFR; 20 = IFR; 30 = ILS

Table C-2 Sample STAR DATA

ANNUAL RELATIVE FREQUENCY DISTRIBUTION STATION =94823 PITTSBURGH, PA 24085

1979

DIRECTION	SPEED(KTS) 1 - 3	4 - 6	7 - 10	11-16	17-21	GREATER THAN 21	AVG SPD	TOTAL
N	39	216	365	95	0	0	7.7	715
NNE	33	119	95	0	0	0	6.1	255
NE	40	175	93	15	0	0	5.9	323
ENE	36	114	142	36	1	0	7.1	329
E	73	164	159	43	0	1	6.6	440
ESE	45	106	79	32	0	0	6.6	242
SE	68	193	107	52	0	0	6.4	420
SSE	50	180	112	14	0	0	5.9	356
S	83	289	210	43	0	0	6.3	625
SSW	35	93	141	76	4	1	8.1	350
SW	45	166	301	194	17	20	9.3	743
WSW	49	143	242	280	37	35	10.4	786
W	58	223	338	349	72	20	10.0	1060
WNW	48	168	198	158	31	5	8.9	608
NW	38	95	160	119	12	1	8.8	425
NNW	20	76	212	136	2	0	8.8	454
AVG	3.0	5.1	8.4	12.9	18.5	25.0	7.6	
TOTAL	768	2520	2954	1650	176	83		

TOTAL NUMBER OF OBSERVATIONS = 8760

TOTAL NUMBER OF CALMS = 609

Table C-3 Sample STAR DATA

ANNUAL RELATIVE FREQUENCY DISTRIBUTION STATION =94823

PITTSBURGH, PA 24085 1979

	SPEED(KTS)						
DIRECTION	0 - 3	4 - 6	7 - 10	11-16	17-21	GREATER THAN 21	TOTAL
N	0.009844	0.024658	0.041667	0.010845	0.000000	0.000000	0.087013
NNE	0.006981	0.013584	0.010845	0.000913	0.000000	0.000000	0.032323
NE	0.009112	0.019977	0.010616	0.001712	0.000000	0.000000	0.041418
ENE	0.007281	0.013014	0.016210	0.004110	0.000114	0.000000	0.040729
E	0.013344	0.018721	0.018151	0.004909	0.000000	0.000114	0.055239
ESE	0.008330	0.012100	0.009018	0.003653	0.000000	0.000000	0.033101
SE	0.013281	0.022032	0.012215	0.005936	0.000000	0.000000	0.053464
SSE	0.010571	0.020548	0.012785	0.001598	0.000000	0.000000	0.045502
S	0.017340	0.032991	0.023973	0.004909	0.000000	0.000000	0.079212
SSW	0.006702	0.010616	0.016096	0.008676	0.000457	0.000114	0.042661
SW	0.009598	0.018950	0.034361	0.022146	0.001941	0.002283	0.089279
WSW	0.009653	0.016324	0.027626	0.031963	0.004224	0.003995	0.093786
W	0.012562	0.025457	0.038584	0.039840	0.008219	0.002283	0.126946
WNW	0.010046	0.019178	0.022603	0.018037	0.003539	0.000571	0.073973
NW	0.007150	0.010845	0.018265	0.013584	0.001370	0.000114	0.051328
NNW	0.005395	0.008676	0.024201	0.015525	0.000228	0.000000	0.054025
TOTAL	0.157192	0.287671	0.337214	0.188356	0.020091	0.009475	

TOTAL RELATIVE FREQUENCY OF OBSERVATIONS = 1.000001

TOTAL RELATIVE FREQUENCY OF CALMS DISTRIBUTED ABOVE = 0.069521

Table C-4. Tabular form of graphical wind rose

	Frequency Wind Speed is in Class j, percent						
j=	1	2	3	4	5	6	7
			Wind Speed, mi/h				
Sector	0-3	4-12	13-15	16-18	19-24	25-31	32
Calms	11.8	-	-	-	-	-	-
N	-	4.3	0.8	0.2	0	0	0
NNE	-	2.6	0.2	0.1	0	0	0
NE	-	2.7	0.2	0	0	0	0
ENE	-	2.9	0.3	0.1	0	0	0
E	-	3.6	0.4	0.1	0	0	0
ESE	-	3.2	0.4	0.2	0.1	0	0
SE	-	3.6	0.4	0.1	0	0	0
SSE	-	2.9	0.3	0.1	0	0	0
S	-	4.4	0.5	0.1	0.1	0	0
SSW	-	3.4	0.8	0.5	0.2	0	0
SW	-	5.2	1.7	1.1	0.5	0.1	0
WSW	-	6.1	2.4	1.9	1.1	0.3	0
W	-	5.7	2.1	1.6	0.8	0.2	0
WNW	-	4.0	1.4	1.2	0.6	0.1	0
NW	-	3.6	1.1	0.7	0.4	0.1	0
NNW	-	2.9	0.9	0.4	0.1	0	0

Table C-5. Average wind speeds for each class

Class	Speed Range	Average Speed mi/h
1	0-3 (calm)	Calm
2	4-12	8
3	13-15	14
4	16-18	17
5	19-24	21
6	25-31	28
7	32	32

Table C-6. Wind rose data suitable for use in the COMPLY code

Wind From	Frequency	Average Speed mi/h	m/s
Calm	0.118	---	---
N	0.053	9.2	4.1
NNE	0.029	8.7	3.9
NE	0.029	8.4	3.8
ENE	0.033	8.8	3.9
E	0.041	8.8	3.9
ESE	0.039	9.4	4.2
SE	0.041	8.8	3.9
SSE	0.033	8.8	3.9
S	0.051	9.0	4.0
SSW	0.049	10	4.5
SW	0.086	11	4.9
WSW	0.118	12	5.4
W	0.104	12	5.4
WNW	0.073	12	5.4
NW	0.059	11	4.9
NNW	0.043	10	4.5

Sum	0.999		

The frequencies must sum to between 0.99 and 1.01 to be accepted by COMPLY. Use three decimal places with the frequencies, to make sure their sum is within these limits.

Table C-7. Form for wind rose data

Wind FROM	Frequency[1]	Wind Speed[2]
CALM		XXXXXXXXXXXXX
N		
NNE		
NE		
ENE		
E		
ESE		
SE		
SSE		
S		
SSW		
SW		
WSW		
W		
WNW		
NW		
NNW		
Total[3]		

Notes:

1. Expressed as fraction, NOT percent; i.e. .025, not 2.5%.
2. Must be greater than 0.1 m/s.
3. Must be between 0.99 and 1.01.

APPENDIX D - SUITABILITY OF WIND ROSE DATA FROM AN OFFSITE LOCATION

In general, it is very unlikely that the wind rose data from somewhere else will exactly duplicate the weather patterns at your site. Thus, you must find a location, fairly close, that duplicates the conditions at your location as closely as possible. The factors that most affect the wind speed and direction are as follows:

1. <u>The elevation relative to the surrounding area</u>

   A location on a hill or plateau can have different wind conditions than the lower surrounding area.

2. <u>Presence of a valley</u>

   A location in a valley can have different wind conditions than the terrain around it. The wind tends to channel through a valley.

3. <u>Presence of a large body of water</u>

   The presence of large bodies of water can influence the wind patterns.

4. <u>Topography</u>

   The wind patterns for hilly terrain can be quite different from those for flat terrain.

5. Urban versus rural

The wind patterns for urban locations can be quite different from those in the surrounding rural or suburban areas because of the heat island effect.

The measurements should come from a meteorological tower located within 50 miles of the site.

The measurements should either cover the same year as the assessment period, or be long-term averages (at least 5 years). The period over which the long-term average data were obtained does not have to include the assessment period.

It is unlikely that any facility not having onsite measurements will be able to obtain data having all these factors at their optimum conditions. Moreover, there are no firm guidelines as to what constitutes "good" data; that is, data representative of the conditions at your site. If your calculated doses are well below the limits, then the representativeness of the meteorological data is not critical. However, if you are close to the dose limits, or exceed them, you should consult a qualified meteorologist. The EPA will make the final determination as to whether or not the data you chose are satisfactory.

APPENDIX E - LIST OF NUCLIDES IN COMPLY

Ac-225
Ac-227
Ac-228
Ag-106
Ag-106m

Ag-108m
Ag-110m
Ag-111
Al-26
Am-241

Am-242
Am-242m
Am-243
Am-244
Am-245

Am-246
Ar-37
Ar-41
As-72
As-73

As-74
As-76
As-77
At-211
Au-193

Au-194
Au-195
Au-198
Au-199
Ba-131

Ba-133
Ba-133m
Ba-135m
Ba-139
Ba-140

Ba-141
Ba-142
Be-7
Be-10
Bi-206

Bi-207
Bi-210
Bi-212
Bi-213
Bi-214

Bk-249
Bk-250
Br-77
Br-80
Br-80m

Br-82
Br-83
Br-84
C-11
C-14

Ca-41
Ca-45
Ca-47
Cd-109
Cd-113

Cd-113m
Cd-115
Cd-115m
Cd-117
Cd-117m

Ce-139
Ce-141
Ce-143
Ce-144
Cf-248

Cf-249
Cf-250
Cf-251
Cf-252
Cf-253

Cf-254
Cl-36
Cl-38
Cm-242
Cm-243

APPENDIX E - LIST OF NUCLIDES IN COMPLY

Cm-244
Cm-245
Cm-246
Cm-247
Cm-248

Cm-249
Cm-250
Co-56
Co-57
Co-58

Co-58m
Co-60
Co-60m
Co-61
Cr-49

Cr-51
Cs-129
Cs-131
Cs-132
Cs-134

Cs-134m
Cs-135
Cs-136
Cs-137
Cs-138

Cu-61
Cu-64
Cu-67
Dy-157
Dy-165

Dy-166
Er-169
Er-171
Es-253
Es-254

Es-254m
Eu-152
Eu-152m
Eu-154
Eu-155

Eu-156
F-18
Fe-52
Fe-55
Fe-59

Fm-254
Fm-255
Fr-223
Ga-66
Ga-67

Ga-68
Ga-72
Gd-152
Gd-153
Gd-159

Ge-68
Ge-71
Ge-77
H-3
Hf-181

Hg-193m
Hg-197
Hg-197m
Hg-203
Ho-166

Ho-166m
I-123
I-124
I-125
I-126

I-128
I-129
I-130
I-131
I-132

I-133
I-134
I-135
In-111
In-113m

APPENDIX E - LIST OF NUCLIDES IN COMPLY

In-114m
In-115
In-115m
In-116m
In-117

In-117m
Ir-190
Ir-192
Ir-194
Ir-194m

K-40
K-42
K-43
K-44
Kr-79

Kr-81
Kr-83m
Kr-85
Kr-85m
Kr-87

Kr-88
La-140
La-141
La-142
Lu-177

Lu-177m
Mg-28
Mn-52
Mn-52m
Mn-53

Mn-54
Mn-56
Mo-93
Mo-99
Mo-101

N-13
Na-22
Na-24
Nb-90
Nb-93m
Nb-94

Nb-95
Nb-95m
Nb-96
Nb-97
Nd-147

Nd-149
Ni-56
Ni-57
Ni-59
Ni-63

Ni-65
Np-235
Np-237
Np-238
Np-239

Np-240
Np-240m
O-15
Os-185
Os-191m

Os-191
Os-193
P-32
P-33
Pa-230

Pa-231
Pa-233
Pa-234
Pb-203
Pb-205

Pb-209
Pb-210
Pb-211
Pb-212
Pb-214

Pd-103
Pd-107
Pd-109
Pm-143
Pm-144
Pm-145

APPENDIX E - LIST OF NUCLIDES IN COMPLY

Pm-146
Pm-147
Pm-148
Pm-148m
Pm-149

Pm-151
Po-210
Pr-142
Pr-143
Pr-144

Pt-191
Pt-193
Pt-193m
Pt-195m
Pt-197

Pt-197m
Pu-236
Pu-237
Pu-238
Pu-239

Pu-240
Pu-241
Pu-242
Pu-243
Pu-244

Pu-245
Pu-246
Ra-223
Ra-224
Ra-225

Ra-226
Ra-228
Rb-81
Rb-83
Rb-84

Rb-86
Rb-87
Rb-88
Rb-89
Re-184

Re-184m
Re-186
Re-187
Re-188
Rh-103m

Rh-105
Ru-97
Ru-103
Ru-105
Ru-106

S-35
Sb-117
Sb-122
Sb-124
Sb-125

Sb-126
Sb-126m
Sb-127
Sb-129
Sc-44

Sc-46
Sc-47
Sc-48
Sc-49
Se-73

Se-75
Se-79
Si-31
Si-32
Sm-147

Sm-151
Sm-153
Sn-113
Sn-117m
Sn-119m

Sn-123
Sn-125
Sn-126
Sr-82
Sr-85

APPENDIX E - LIST OF NUCLIDES IN COMPLY

Sr-85m	Th-232
Sr-87m	Th-234
Sr-89	Ti-44
Sr-90	Ti-45
Sr-91	Tl-200
Sr-92	Tl-201
Ta-182	Tl-202
Tb-157	Tl-204
Tb-160	Tm-170
Tc-95	Tm-171
Tc-95m	U-230
Tc-96	U-231
Tc-96m	U-232
Tc-97	U-233
Tc-97m	U-234
Tc-98	U-235
Tc-99	U-236
Tc-99m	U-237
Tc-101	U-238
Te-121	U-239
Te-121m	U-240
Te-123	V-48
Te-123m	V-49
Te-125m	W-181
Te-127	W-185
Te-127m	W-187
Te-129	W-188
Te-129m	Xe-122
Te-131	Xe-123
Te-131m	Xe-125
Te-132	Xe-127
Te-133	Xe-129m
Te-133m	Xe-131m
Te-134	Xe-133
Th-226	Xe-133m
Th-227	Xe-135
Th-228	Xe-135m
Th-229	Xe-138
Th-230	Y-86
Th-231	Y-87

APPENDIX E - LIST OF NUCLIDES IN COMPLY

Y-88
Y-90
Y-90m
Y-91
Y-91m

Y-92
Y-93
Yb-169
Yb-175
Zn-62

Zn-65
Zn-69
Zn-69m
Zr-86
Zr-88

Zr-89
Zr-93
Zr-95
Zr-97

APPENDIX F - DETERMINATION OF DISTANCES BETWEEN RELEASE POINT AND RECEPTOR WHEN BOTH ARE ON THE SAME BUILDING

When both the release point and the receptor are on the same building, the distance between them is measured along the building surface as shown in Figures F-1(a) and F-1(c). It should be the minimum distance, and the easiest way to determine it is to unfold the surfaces as shown in Figures F-1(b) and F-1(d). The obvious path is not always the shortest (see page 181 of KASNER56); however, the difference between the obvious and shortest paths is small and can be neglected.

Figure F-1 - Measuring Distances on Building Surfaces

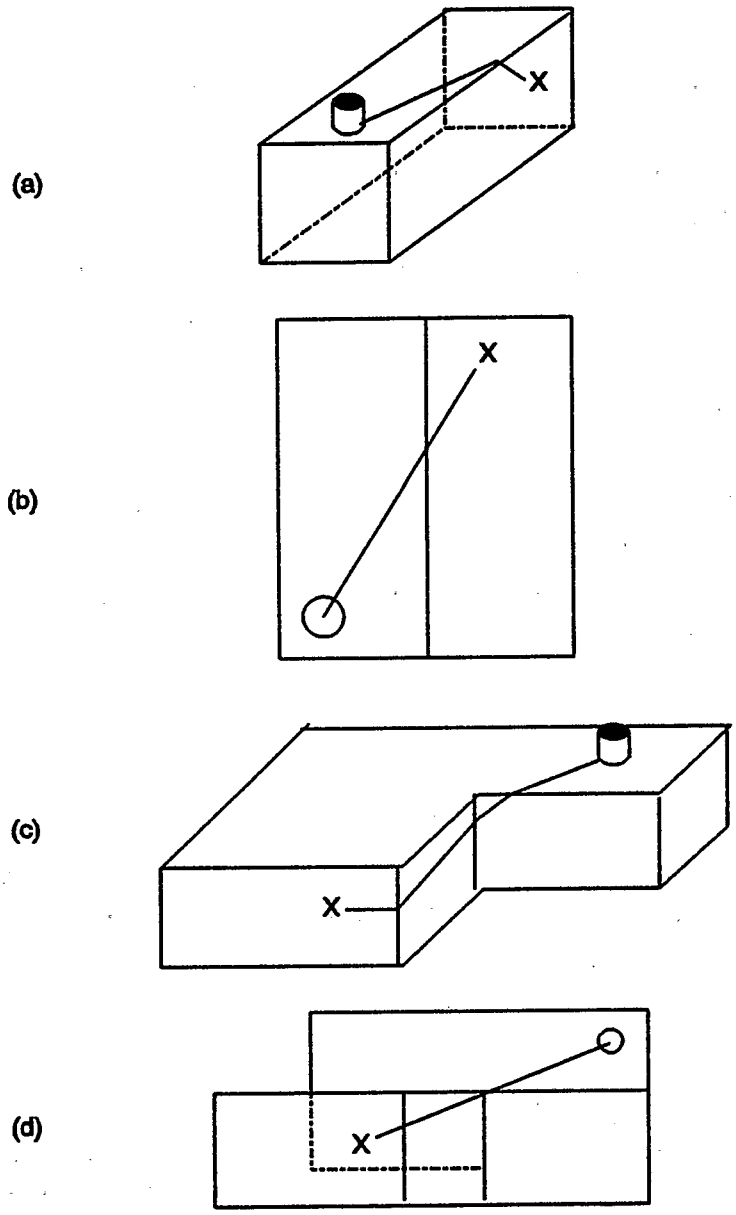

APPENDIX G - METEOROLOGICAL MODEL

G.1 Levels 2 and 3

The meteorological model for levels 2 and 3 is the same as that used in NCRP Commentary 3 (NCRP89). It is described below.

The method for calculating the air concentration at the receptor's location x meters from the source depends upon the configuration of the stack and the location of the receptor relative to the building. There are two main subdivisions--one for tall stacks and one for short stacks where building wake effects are important.

G.1.1 Tall stacks ($H \geq 2.5h_b$)

If the release is from a stack whose height, H (m), is more than 2.5 times the building height, h_b (m), then the following equation is used even if the source and receptor are on the same building:

$$C = fQP(x,H)/u,$$

where f is the fraction of the time the wind blows from the source to the receptor (taken to be 0.25), Q is the release rate (Ci/yr), u is the annual average wind speed (m/s), and P(x,H) (m^{-2}) is defined by

$$P(x,H) = (2.032/x\sigma_z)\exp[-0.5(H/\sigma_z)^2] \qquad (1)$$

where $\sigma_z = 0.06x(1 + 0.0015x)^{-1/2}$, and x is the distance between the source and the receptor (m). The equation

for σ_z is based on neutral atmospheric stability (Class D). The function P(x,H) is zero at x = 0, rises to a maximum at some distance x_{max}, and then declines as x is increased beyond x_{max}. For distances less than x_{max}, P is taken to be $P(x_{max},H)$. This produces a conservative (overestimate) of the concentration at distances less than x_{max} and leads to the curves shown in Figure 3 of NCRP Commentary 3.

G.1.2 Short Stacks or Vents ($H < 2.5h_b$)

G.1.2.1 Source and receptor on same building

If the source and the receptor are on the same building, then either,

$$C = Q/V \qquad (x \leq 3D) \qquad (2)$$

when the distance between the source and the receptor is less than or equal to three times the stack diameter, D (m),

or,

$$C = 30Q/(ux^2) \ , \qquad (x > 3D) \qquad (3)$$

when the distance between the source and receptor is greater than three times the diameter of the stack.

The distance, x, is the shortest distance between the source and the receptor measured along the building surface. (See Appendix F.)

G.1.2.2 Source and receptor not on same building

If the source and receptor are not on the same building, then either,

$$C=0.25Q/(\pi u h_b K), \quad (x < 2.5A_G^{1/2}) \qquad (4)$$

when x is less than or equal to 2.5 times the square root of the building area, $A_G(m^2)$. In the above equation, K = 1 meter, or,

$$C = fQB/u \quad (x > 2.5A_G^{1/2}) \qquad (5)$$

when x is greater than 2.5 times the square root of the building area. $B = 2.032/(x\sum_z)$, and

$$\sum_z = (\sigma_z^2 + A_G/\pi)^{1/2}$$

The concentration at farms producing various foods is calculated the same way. The distance, x, in this case is the distance from the source to the farm. If the user specifies that the food is produced at home, x for the farm is the same as the distance from the source to the receptor.

G.2 Level 4

G.2.1 Differences Between Level 4 and Levels 2 and 3

At level 4, the method is almost the same as given above for levels 2 and 3. There are four differences.

The first is that f and u may be supplied by the user

for each of 16 sectors around the release point (a wind rose). (The user must also supply the distance to the closest receptor in each of these sectors.) If the user does not choose to supply a wind rose, then f is taken to be 0.25 just as at levels 2 and 3. If there is a wind rose, the code searches the sectors to find the receptor exposed to the highest concentration.

The second difference is that plume rise (momentum or buoyant) is accounted for.

The third difference is that the code uses the user-supplied distance to the farms producing vegetables, milk, and meat in the sector having the maximum value of f/u to estimate the concentration at each farm. If the user specifies that the food is produced at home, then the concentration is that at the location of the receptor, just as for levels 2 and 3.

The fourth difference is that, with the receptor on the same building as the source, the air concentration is the smaller of either:

$$C = 0.1Q/V, \text{ or}$$

$$C = 30Q/(ux^2) \qquad (6)$$

when the receptor is more than three stack diameters from the source (See WILSON82, page 2640).

G.2.2 <u>Plume Rise</u>

Plume rise is used only when the stack height is greater

than 2.5 times the building height (no building wake effects). The larger of momentum or buoyant plume rise is used, not their sum.

Momentum plume rise is estimated using a simplified method based on the equations in BRIGGS84. The momentum flux, F_m, is given by BRIGGS84 (the equation following Briggs' equation 8.36); i.e.,

$$F_m = \rho_s w_s V/(3.14\rho_a), \qquad (7)$$

where w_s is the stack velocity and ρ_a and ρ_s are the air and stack gas densities.

Equation 8.99 of BRIGGS84 is as follows:

$$\Delta h = 0.93[F_m/(\beta^2 U u_*)]^{3/7}(h_s+\Delta h)^{1/7} \qquad (8)$$

where U is the mean wind speed (with a wind rose $U=\sum f_i u_i$, where f is the frequency and u the wind speed for direction i), u_* is the friction velocity (taken to be U/12 per BRIGGS86), h_s the stack height, and Δh the plume rise.

This equation must be solved iteratively. However, by using equation 8.100 of BRIGGS84 to approximate the h on the right hand side $[h=0.9(U/u_*)^{1/2}F_m^{1/2}/(\beta U)]$, we can circumvent the need for an iterative solution. By using β= 0.4 + 1.2/R as suggested in BRIGGS84, and assuming that $U/u_* = 12$ (a moderately conservative value, from BRIGGS86), then equation (8) becomes

$$\Delta h=0.93[75F_m/[(1+3/R\beta^2U^2]^{3/7}[(h_s+7.79F_m^{1/2}/U(1+3/R)]^{1/7}$$

(9)

Buoyant plume rise is estimated using a simplified method suggested in BRIGGS84 and based on the equations given in that study.

The buoyant flux, F_b, is given by the equation following equation 8.35 of BRIGGS84; i.e.,

$$F_b=g(\rho_s-\rho_a)V/\rho_a \quad (10)$$

where g is the acceleration of gravity (9.81 m/s).

Equation 8.97 of BRIGGS84 is as follows:

$$\Delta h=1.2[F_b/Uu_*^2)]^{3/5}(hs+\Delta h)^{2/5} \quad . \quad (11)$$

Assuming that $U/u_* = 12$ as above, and assuming for the moment that h_s on the right hand side is 0, then

$$\Delta h = (23.7)^{5/3}F_b/U^3 = 195F_b/U^3 \quad . \quad (12)$$

Using this approximation for Δh on the right hand side of equation (11) leads to

$$\Delta h=23.7[F_b/U^3]^{3/5}(h_s+195F_b/U^3)^{2/5} \quad . \quad (13)$$

The effective stack height, h_{eff}, is $h_s + \Delta h$, where Δh is the larger of momentum or buoyant plume rise.

APPENDIX H - DOSE CALCULATIONS

The dose calculations for levels 2 and 3 are the same as those used in NCRP Commentary 3 (NCRP89). At level 4, the methods are generally the same, but there are some differences. The contribution of daughter radionuclides to the dose from external exposure is handled internally by the program, rather than being built into the dose factors. Build-up of daughters in the food chain is also calculated by the program instead of being compensated for in the dose factors. In the ensuing discussion, the differential equations are solved using the method described in SKRABLE74.

The air concentration for estimating the exposure from immersion and inhalation is handled as follows: The concentration of the parent, N_1, is calculated from,

$$\frac{dN_{A1}}{dt} = -\lambda_1 N_{A1}$$

where N_{A1} is the concentration of parent atoms, $(=C_{air}/\lambda_1)$, and C_{air} is the concentration of parent calculated from $C_{air} = Q(C/Q)$.

The daughter concentration is,

$$\frac{dN_{Ai}}{dt} = N_{Ai-1} - \lambda_i N_{Ai}$$

The initial condition is $N_i = 0$ at $t = 0$. The equations are solved for $t = T$, where T is the transport time from the source to the receptor (= x/u) where x is the distance and u the average wind speed.

The concentration of daughters contributing to the dose

from exposure to contaminated ground was estimated as follows:

$$\frac{dN_{G1}}{dt} = vN_{A1} - (\lambda_1 + \lambda_{h1}) N_{G1}$$

$$\frac{dN_{Gi}}{dt} = vN_{Ai} + \lambda_{i-1} N_{Gi-1} - (\lambda_i + \lambda_{h1}) N_{Gi}$$

where v is the deposition velocity and λ_{h1} is the environmental removal constant. All the concentrations are zero initially. The equations are solved for t = 100 y.

Grow-in of daughters in the food chain is accounted for as follows: The concentration on the leaves of plants is given by,

$$M\frac{dN_{L1}}{dt} = vAf_r N_{A1} - M(\lambda_1 + \lambda_w) N_{L1}$$

Because Y = m/A, this becomes,

$$\frac{dN_{L1}}{dt} = (vf_r/Y) N_{A1} - (\lambda_1 + \lambda_w) N_{L1}$$

and the equations for the daughters are,

$$\frac{dN_{Li}}{dt} = (vf_r/Y) N_{Ai} + \lambda_{i-1} N_{Li-1} - (\lambda_i + \lambda_w) N_{Li}$$

where M is the plant mass growing on area A, f_r is the retention fraction, λ_w the weathering constant, and Y the biomass per unit area at harvest. The initial concentrations are all zero. These differential equations are solved for the N's at $t = t_c$, the length of the growing season. The N's are converted to activity by the

equation $C_i = \lambda_i N_i$.

The concentration in the soil available for uptake by the roots of the plants is given by,

$$M\frac{dN_{R1}}{dt} = AvN_{A1} - M(\lambda_1 + \lambda_{h1})N_{R1}$$

$$M\frac{dN_{Ri}}{dt} = AvN_{Ai} + \lambda_{i-1}N_{Ri-1} - (\lambda_i + \lambda_{h1})N_{Ri}$$

where M is the mass of soil in the root zone, A the surface area of soil on which radioactivity deposits, v the deposition velocity, and λ_{hl} the removal constant for harvesting and leaching. Because P (the areal density of the root zone) is equal to M/A, equations become,

$$\frac{dN_{R1}}{dt} = (v/P)N_{A1} - (\lambda_1 + \lambda_{h1})N_{R1}$$

$$\frac{dN_{Ri}}{dt} = (v/P)N_{Ai} + \lambda_{i-1}N_{Ri-1} - (\lambda_i + \lambda_{h1})N_{Ri}$$

The concentration in the plant is simply

$$C_i = B_{vi}(\lambda_i N_{Ri})$$

and the total concentration is the sum of the leaf and soil uptake concentrations. The equations are solved for t = 100 y time for build-up, and the N's are converted to activity by

$$C_i = \lambda_i N_i$$

After harvest, slaughter, or milking, the parent and

daughter nuclides behave according to

$$\frac{dN_1}{dt} = -\lambda N_1$$

$$\frac{dN_i}{dt} = \lambda_{i-1}N_{i-1} - \lambda_i N_i$$

The initial values are the values at the end of the growing season. The times are the delay times for the vegetables, meat and milk. Note that the concentrations are assumed to be constant from the time that the animal eats the forage until it is milked or slaughtered.

These concentrations are used with the pathways equations in NCRP Commentary No. 3 to calculate intake and dose. The sources for the dose conversion factors are EPA88 (internal) and DOE88 (external). The soil to plant concentration ratios and animal product transfer factors are from the sources in NCRP Commentary No. 3.

Tritium and carbon-14 at level 4 are treated slightly differently than in NCRP Commentary No. 3. The NCRP approach assumes that the specific activity of carbon-14 and tritium are the same in the food as in the atmosphere. We used a similar approach, described in BAKER76. Instead of assuming that the specific activity of tritium is the same in the food product as in the atmosphere, however, the BAKER76 method accounts for some dilution by nontritiated water. In addition, we used the BAKER76 equations directly, rather than using transfer factors.

Wet deposition is treated as follows. According to IA82, the washout factor, W ($1/m^2$), is given by

$$W = Ncp_i / 2\pi x_i u_i$$

where N is the number of sectors, c is a factor equal to 1.8×10^{-5} (particulates) or 1.2×10^{-5} (iodine) yr/mm-sec, p_i is the rainfall rate in sector i, m/yr, x_i the distance from the source to the receptor, and u_i the annual average wind speed.

We define the "wet deposition velocity," V_w as

$$V_w = A_w/C$$

where A_w is the flux of the material deposited on the ground (ci/m^2-sec) and C the air concentration (Ci/m^3). The flux is given by

$$A_w = QW$$

where Q is the annual average release rate.

Combining these equations,

$$V_w = A_w/C = (Q/C)\,Ncp_i/(2\pi x_i u_i)$$

The total deposition is then the sum of the wet and dry deposition velocities. The precipitation rate is taken to be 1 meter per year.

The only other difference between level 4 and level 3 is the values of the parameters. The values used at level 4 are those from EPA79 (AIRDOS-EPA) and EPA83. Table H-1 compares the two sets of values.

Table H-1. Parameters used in NCRP and COMPLY

Symbol	Definition	NCRP	COMPLY*
RMCONR	Removal constant, 1/yr	0.01	0.015
DEPTIM	Period of long-term buildup in soil, yr	30	100
VDEP	Deposition velocity, m/day (noble gases)	0	0
VDEP	Deposition velocity, m/day (iodine)	1000	860
VDEP	Deposition velocity, m/day (particles)	1000	210
FRVEG	Fraction of activity intercepted & retained (veg)	0.25	0.1**
FRMLK	Fraction of activity intercepted & retained on forage or feed (milk)	0.25	0.18**
FRMEA	Fraction of activity intercepted & retained on forage or feed (meat)	0.25	1.8**
TWEATH	Weathering half life, days	14	12
TEVEG	Period of above-ground exposure, days (veg)	60	60
TEMLK	Period of above-ground exposure, days (milk)	30	30
TEMEA	Period of above-ground exposure, days (meat)	30	30
YVEG	Edible crop per sq m at harvest, kg/sq m (veg)	2	1.0**
YMLK	Edible crop per sq m at harvest, kg/sq m (milk)	0.12	1.0**
YMEA	Edible crop per sq m at harvest, kg/sq m (meat)	0.12	1.0**
PVEG	Areal density of effective root zone, kg/sq m	200	220
PMLK	Areal density of effective root zone, kg/sq m	200	220
PMEA	Areal density of effective root zone, kg/sq m	200	220
QMLK	Feed or forage consumption rate, kg/day (dairy)	16	16
QMEA	Feed or forage consumption rate, kg/day (meat)	12	12
QWMEA	Water consumption by dairy cow, kg/day (dairy)	N/A	60

*Taken from EPA89a

**Value of FR at Level 4 of COMPLY represents the ratio of Fr/Y.

Table H-1. Parameters used in NCRP and COMPLY (continued)

Symbol	Definition	NCRP	COMPLY
QWMEA	Water consumption by beef cattle, kg/day	N/A	50
CH20	Concentration of water vapor in atmosphere, kg/m^3	U*	0.008
CCARB	Concentration of carbon in atmosphere, kg/m^3	U*	1.6E-4
FHVEG	Fraction of hydrogen in vegetables	U*	0.1
FHMEAT	Fraction of hydrogen in meat	U*	0.1
FHMILK	Fraction of hydrogen in milk	U*	0.11
FHFEED	Fraction of hydrogen in animal feed or forage	U*	0.07
FCVEG	Fraction of carbon in vegetables	U*	0.09
FCMEAT	Fraction of carbon in meat	U*	0.24
FCMILK	Fraction of carbon in milk	U*	0.07
CVEG1	Human vegetable consumption, kg/yr	200	70
CMILK1	Human milk consumption, kg/yr	300	160
CMEAT1	Human meat consumption, kg/yr	100	75
BREATH	Breathing rate, m^3/yr (cannot now be changed)	8000	8000
DELVEG	Delay time, harvest to consumption, days	1	11
DELMLK	Delay time, milking to consumption days	2	2
DELMET	Delay time, slaughter to consumption, day	7	17

*Unknown-value not given in NCRP Commentary No. 3

APPENDIX I RESOLVING PROBLEMS AND CONTACTING THE EPA

I.1 EPA CONTACTS

If you do not understand any steps or have trouble with any of the calculations described in this document, you should contact the Program Manager at your regional EPA office. You should also contact the Regional Program Manager if you are unable to demonstrate compliance at level 4 of the COMPLY code. EPA Regional Offices are depicted in Figure I-1. A list of the regional EPA Regional Program Managers and their telephone numbers is included as Table I-1.

While most facilities will be able to demonstrate compliance by one of the levels described in this report, if none of these levels works for your facility, you should contact the EPA Regional Program Manager at your regional EPA office to determine the next step.

I.2 SOURCES

NCRP Commentary No. 3 may be obtained from the National Council on Radiation Protection and Measurements, 7910 Woodmont Avenue, Bethesda, Maryland 20814. The telephone number is 301-657-2652.

Additional copies of the guidance document for compliance with 40 CFR 61, Subpart I, or the User's Guide for the COMPLY Code and 5 1/4-inch diskettes containing the code and all the data files can be obtained from:

Program Management Office 6601J
Office of Radiation and Indoor Air
Environmental Protection Agency
401 M St., SW
Washington, DC 20460.

Figure I-1 EPA Regional Offices

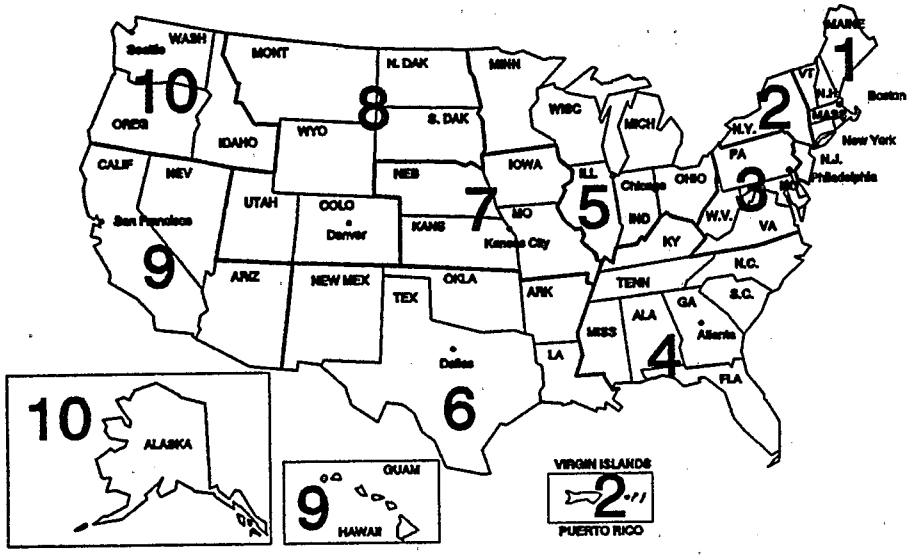

Regions
4 -- Alabama
10 -- Alaska
9 -- Arizona
6 -- Arkansas
9 -- California
8 -- Colorado
1 -- Connecticut
3 -- Delaware
3 -- D.C.
4 -- Florida
4 -- Georgia
9 -- Hawaii
10 -- Idaho
5 -- Illinois
7 -- Iowa
7 -- Kansas
4 -- Kentucky
6 -- Louisana

Regions
1 -- Maine
3 -- Maryland
1 -- Massachusetts
5 -- Michigan
5 -- Minnesota
4 -- Mississippi
7 -- Missouri
8 -- Montana
7 -- Nebraska
9 -- Nevada
1 -- New Hampshire
2 -- New Jersey
6 -- New Mexico
2 -- New York
4 -- North Carolina
5 -- Ohio
6 -- Oklahoma
10 -- Oregon

Regions
3 -- Pennsylvania
1 -- Rhode Island
4 -- South Carolina
8 -- South Dakota
4 -- Tennessee
6 -- Texas
8 -- Utah
1 -- Vermont
3 -- Virginia
10 -- Washington
3 -- West Virginia
5 -- Wisconsin
8 -- Wyoming
9 -- American Samoa
9 -- Guam
2 -- Virgin Islands

Table I-1. EPA Regional Program Managers

	Telephone No.
Tom D'Avanzo Radiation Program Manager, Region 1 Environmental Protection Agency John F. Kennedy Federal Building / ATR One Congress Street Boston, MA 02203	(617) 565-4502
Paul A Giardina Radiation Program Manager, Region 2 Environmental Protection Agency Jacob K. Javits Federal Building / 1005A 26 Federal Plaza New York, NY 10278	(212) 264-4110
Lewis Felleisen Radiation Program Manager, Region 3 Special Program Section Environmental Protection Agency 841 Chestnut Street / 3AT12 Philadelphia, PA 19107	(215) 597-8326
Chuck Wakamo Radiation Program Manager, Region 4 Environmental Protection Agency 345 Courtland Street, N.E. Atlanta, GA 30365	(404) 347-3907
Jack Barnett Radiation Program Manager, Region 5 Environmental Protection Agency 77 West Jackson Blvd. / AT18J Chicago, IL 60604-3507	(312) 886-6175
Donna Ascenzi Radiation Program Manager, Region 6 Air Program Branch (6T-E) Air, Pesticides and Toxics Division Environmental Protection Agency 1445 Ross Avenue Dallas, TX 75202-2733	(214) 655-7224

Table 5-1. EPA Regional Program Managers (continued)

	Telephone No.
Gale A. Wright Radiation Program Manager, Region 7 Environmental Protection Agency 726 Minnesota Avenue Kansas City, KS 66101	(913) 551-7681
Milton W. Lammering Radiation Program Manager, Region 8 Environmental Protection Agency Suite 500 999 18th Street Denver, CO 80202-2405	(303) 293-1440
Michael S. Bandrowski Radiation Program Manager, Region 9 Environmental Protection Agency 75 Hawthorne Street (A-1-1) San Francisco, CA 94105	(415) 744-1048
Jerry Leitch Radiation Program Manager, Region 10 Environmental Protection Agency 1200 Sixth Avenue, Mail Stop AT-082 Seattle, WA 98101	(206) 442-7660