520476017

ENVIRONMENTAL ANALYSIS OF THE URANIUM FUEL CYCLE

PART IV - Supplementary Analysis: 1976

July 1976

U.S. ENVIRONMENTAL PROTECTION AGENCY
Office of Radiation Programs
Washington, D.C. 20460

PREFACE

In 1973 the Office of Radiation Programs issued an environmental analysis of the uranium fuel cycle, which was issued in three volumes covering fuel supply, power reactors, and fuel reprocessing. Subsequent to the issuance of this analysis, the Agency proposed environmental radiation protection standards on May 29, 1975, for nuclear power operations of the uranium fuel cycle (40 CFR Part 190). The Agency held public hearings on these proposed standards in Washington, D.C., on March 8 - 10, 1976. As a result of the ensuing comments, a number of areas were identified in which the development of additional information was necessary.

It is the objective of this new Part IV, entitled "Supplementary Analysis - 1976," to address several technical areas in which new information is available or which were discussed only briefly in previous reports. In the former category are sections pertaining to uranium milling and fuel reprocessing, while items such as transuranic effluents from recycled uranium and nitrogen-16 skyshine at BWRs fall into the second category. Finally, Part IV replaces and updates the technical discussions presented in the January 5, 1976, Supplementary Information document.

As in the original reports, the principal purposes of these analyses are to project the impact on man of the environmental releases of radioactive materials from the fuel cycle, and to assess the capabilities and costs of controls available to manage environmental releases of these materials.

Comments on this analysis would be appreciated. These should be sent to the Director, Technology Assessment Division (AW-459), Office of Radiation Programs.

W. D. Rowe, Ph.D.
Deputy Assistant Administrator
for Radiation Programs (AW-458)

CONTENTS

I. Fuel Supply

Page

A. Environmental Analysis of the Uranium Fuel Cycle, Part I (Fuel Supply): Uranium Milling 1

1.0 Introduction 1

2.0 General description 3

3.0 Releases of radioactive effluent from uranium milling operations 7

3.1 Airborne releases from the mill 7
3.2 Waterborne releases from the mill 9
3.3 Airborne and waterborne releases from the mill tailings pond 12

4.0 The model uranium mill 17

5.0 Radioactive effluents from a model uranium mill 19

6.0 Radiological impact of a model mill 23

7.0 Health effects impact of a model mill 26

8.0 Control technology for uranium milling 27

8.1 Airborne effluent control technology 27
8.2 Waterborne effluent control technology and solid waste control technology 30

9.0 Effluent control technology for the model mill 34

10.0 Retrofitting control technology to operating uranium mills 36

10.1 Retrofitting control measures to operational tailings ponds 36

References 44

CONTENTS (continued)

Page

B. Transuranium Effluents from Re-enriching or Refabricating Reprocessed Uranium 47

1.0 Introduction 47

2.0 Gaseous diffusion operating experience 51

3.0 Estimated radioactivity releases 54

References 58

II. Nuclear Power Reactors

A. An Analysis of Control Options for N-16 Offsite Skyshine Doses at Boiling Water Reactors 59

1.0 Introduction 59

2.0 Sources 60

3.0 Turbine building configuration 62

4.0 Dose assessment 64

5.0 Shielding of components 65

References 83

III. Nuclear Fuel Reprocessing

A. Control of Iodine Discharges from Nuclear Fuel Reprocessing Facilities 84

1.0 Introduction 84

2.0 Source terms for iodine 85

3.0 Control technologies for iodine at reprocessing plants 87

CONTENTS (continued)

Page

3.1 Caustic scrubbers 89
3.2 Mercuric nitrate scrubbers 90
3.3 Silver zeolite adsorbers 90
3.4 Macroreticular resins..... 91
3.5 Suppression in evaporator by mercuric nitrate .. 91
3.6 Advanced systems 92

4.0 Cost evaluations 94

5.0 Doses and potential health impact attributable to iodine discharges from fuel reprocessing 95

6.0 Cost-effectiveness considerations 97

References 106

B. Control of Krypton Discharges from Nuclear Fuel Reprocessing Facilities 109

1.0 Introduction 109

2.0 Source terms for krypton 110

3.0 Control technologies for krypton at reprocessing plants 111

3.1 Cryogenic distillation 111
3.2 Selective absorption 113

4.0 Cost of krypton control at fuel reprocessing plants 115

4.1 Direct costs 117
4.2 Indirect costs 118
4.3 Operating and maintenance costs 119
4.4 Present worth 120

5.0 Doses and potential health impact attributable to krypton discharges from fuel reprocessing 121

6.0 Cost-effectiveness of krypton control at fuel reprocessing plants 122

References 126

TABLES

I. Fuel Supply — Page

A. Environmental Analysis of the Uranium Fuel Cycle, Part I (Fuel Supply): Uranium Milling 1

Section 2

2.0-1 Uranium Mills in Operation as of March 1975 4-5

Section 3

3.1-1 Predicted Airborne Releases of Radioactive Materials from the Highland Uranium Mill, Powder River Basin, Wyoming 10

3.2-1 Concentrations of Radioactive Effluents in Waste Milling Solutions from the Highland Uranium Mill .. 11

3.2-2 Analysis of Waste Milling Solution from the Humeca Uranium Mill (Alkaline Leach Process) 13

3.3-1 Estimates of Quantities of Radionuclides Seeping Through the Impoundment Dam of a Uranium Mill Initially and at 2-1/4 Years 15

Section 5

5.0-1 Discharge of Radionuclides to the Air from Model Uranium Mills and Tailings Piles with Base Case Controls 20

Section 6

6.0-1 Radiation Doses to Individuals Due to Inhalation in the Vicinity of a Model Mill with Base Case Controls 24

6.0-2 Collective Dose to the General Population in the Vicinity of a Model Mill with Base Case Controls .. 25

Page

Section 8

8.1-1 Cost and Efficiencies of Control Technology for Mills 29

Section 9

9.0-1 Radiological Impact of Airborne Effluents versus Control Costs for a Model Uranium Mill 35

B. Transuranium Effluents from Re-enriching or Refabricating Reprocessed Uranium 47

1.0-1 Calculated Gamma Radioactivity Distribution of Fission Products, Gamma and Beta Radioactivity of all Fission Products, and Alpha Radioactivity of Transuranium and Uranium Isotopes 49

1.0-2 Calculated Fission Product and Transuranium Isotope Annual Inputs and Equilibrium System Concentrations 52

3.0-1 Assumed Distribution of Fission Products and Transuranium Isotopes to Atmosphere, Primary Holding Pond, and Burial Ground 54

3.0-2 Estimated Radioactivity Released to the Atmosphere from an Enrichment Plant 57

II. Nuclear Power Reactors

A. An Analysis of Control Options for N-16 Offsite Skyshine Doses at Boiling Water Reactors 59

Section 2

2.0-1 N^{16} Characteristics of a Standard BWR Turbine System 69-72

2.0-2 N^{16} Inventories for a Standard BWR Turbine System 73-74

Page

Section 5

5.0-1 Turbine Equipment Typical Total and Net N^{16} Inventories (Ci) for a 1200 MWe Plant 75

5.0-2 Summary of Shielding Cost Estimates..... 76

III. Nuclear Fuel Reprocessing

A. Control of Iodine Discharges from Nuclear Fuel Reprocessing Facilities..... 84

Section 3

3.0-1 Iodine Control Cost Summary..... 99

Section 5

5.0-1 100-year Cumulative Environmental Dose Commitment and Estimated Health Effects Attributable to the Release of I-129 from a 1500 MTHM/yr Reprocessing Plant 100

5.0-2 Maximum Individual Thyroid Doses from I-129 Discharged from a 1500 MTHM/yr Reprocessing Plant 101

5.0-3 Maximum Individual Doses from I-131 Discharged from a 1500 MTHM/yr Reprocessing Plant 102

Section 6

6.0-1 Cost-Effectiveness of Iodine Control Systems at Fuel Reprocessing Plants..... 103

B. Control of Krypton Discharges from Nuclear Fuel Reprocessing Facilities 109

Section 4

4.0-1 Estimated Capital and Present Worth Costs of Krypton Control Systems 124

Section 6

6.0-1 Cost-Effectiveness of Krypton Control at Fuel Reprocessing Plants 125

FIGURES

II. Nuclear Power Reactors

Page

A. An Analysis of Control Options for N-16 Offsite Skyshine Doses at Boiling Water Reactors 59

Section 3

3-1 Typical Component Layout in Early BWR Turbine Building Design 77
3-2 Typical Component Layout in Current BWR Turbine Building Designs 78
3-3 Contributions to Dose Rate from N-16 in Turbine Building Components 79

Section 5

5-1 Top View of Turbine Component Layout Showing Typical "Access" Shield Design Along With Various Shield Options 80
5-2 Transverse sectional view of Nine Mile Point 2 Nuclear Plant Turbine Building, Showing Shielding of Moisture Separators and Turbines 81
5-3 Annual Dose at 500 Meters vs. Cost of Shielding (Turbine Parallel to Boundary) 82

III. Nuclear Fuel Reprocessing

A. Control of Iodine Discharges from Nuclear Fuel Reprocessing Facilities 84

Section 3

3-1 Simplified Schematic of Current Iodine Control Systems at Reprocessing Plants 104
3-2 Simplified Schematic of Advanced Iodine Control Systems at Reprocessing Plants 105

I. FUEL SUPPLY

A. Environmental Analysis of the Uranium Fuel Cycle, Part I (Fuel Supply): Uranium Milling

1.0 Introduction

The EPA recently completed a technial review (1) of the uranium milling industry as part of an overall analysis of the uranium fuel cycle (2,3). This review included a description of the milling process, estimations of radioactive effluent releases, radiological impact, health effects impact, and the costs and effectiveness of control technologies for mills. An analysis of the tailings piles associated with mills was also included. This review was prepared in support of EPA's proposed standards for the nuclear fuel cycle, 40 CFR Part 190 (4).

Since publication in 1973, considerable new information on the uranium milling industry has become available (5,6,7,8,9,10,11); in particular, the engineering survey report (6), "Correlation of Radioactive Waste Treatment Costs and the Environmental Impact of Waste Effluents in the Nuclear Fuel Cycle for Use in Establishing 'as Low as Practicable' Guides - Milling of Uranium Ores," has been prepared by Oak Ridge National Laboratory for the Nuclear Regulatory Commission (NRC). This report contains an extensive review of the costs and the effectiveness of various control technology systems for uranium mills and mill tailings piles.

The EPA believes it to be worthwhile to revise its previous technical review of the milling industry, taking into account these new sources of information. Because radon-222 releases from fuel cycle facilities have been specifically excluded from EPA's proposed

standard, analysis of radon-222 releases from uranium mills and uranium mill tailings piles has been omitted from this document. Radon-222 will be the subject of separate regulatory actions at a later date.

2.0 General description of the milling process

A uranium mill extracts uranium from ore. The product is a semi-refined uranium compound (U_3O_8) called "yellowcake" which is the feed material for the production of uranium hexafluoride (UF_6). As of March 1975, seventeen mills (7) were operating in the United States (table 2.0-1) with nominal capacities ranging from 250 to 7,000 tons of ore per day. These mills are characteristically located in arid, low population regions of the west. States with significant high grade ore reserves are (6) Wyoming, New Mexico, Texas, Colorado, and Utah.

Eighty-five percent of yellowcake is currently produced by a process that uses sulfuric acid to leach the uranium out of the ore; the remainder is produced by a sodium carbonate, alkali leach process. Exact details vary from mill to mill, but, as an example, the principal steps in an acid leach process mill are as follows:

a. Ore is blended and crushed to pass through a 2.5 cm (1 inch) screen. The crushed ore is then wet ground in a rod or ball mill and is transferred as a slurry to leaching tanks.

b. The ore is contacted with sulfuric acid solution and an oxidizing reagent to leach uranium from the ore. The product liquor is pumped to the solvent-extraction circuit while the washed residues (tailings) are sent to the tailings pond or pile.

c. Solvent extraction or ion exchange is used to purify and concentrate the uranium.

Table 2.0-1 (7)

URANIUM MILLS IN OPERATION AS OF MARCH 1975

COMPANY	LOCATION	YEAR OPERATIONS INITIATED	NOMINAL CAPACITY (Tons of Ore/Day)
Anaconda Company	Grants, New Mexico	1953	3000
Atlas Corporation	Moab, Utah	1956	800-1500
Conoco & Pioneer Nuclear, Inc.	Falls City, Texas	1961	220-1750
Cotter Corporation	Canon City, Colorado	1958	150-450
Dawn Mining Company	Ford, Washington	1957	0-400
Exxon, U.S.A.	Powder River Basin, Wyoming	1971	2000
Federal-American Partners	Gas Hills, Wyoming	1959	500-950
Kerr-McGee Nuclear	Grants, New Mexico	1958	3600-7000
Petrotomics Company	Shirley Basin, Wyoming	1962	525-1500
Rio Algom Corp.	La Sal, Utah	1972	500
Union Carbide Corp.	Uravan, Colorado	1950	0-1300
Union Carbide Corp.	Natrona County, Wyoming	1960	1000

Table 2.0-1 (Continued)

COMPANY	LOCATION	YEAR OPERATIONS INITIATED	NOMINAL CAPACITY (Tons of Ore/Day)
United Nuclear-Homestake Partners	Grants, New Mexico	1958	1650-3500
Utah International, Inc.	Gas Hills, Wyoming	1958	750-1200
Utah International, Inc.	Shirley Basin, Wyoming	1971	1200
Western Nuclear, Inc.	Jeffrey City, Wyoming	1957	400-1200
TVA (Mines Development, Inc.)	Edgemont, South Dakota	1956	250-500

d. The uranium is precipitated with ammonia and transferred as a slurry.

e. Thickening and centifuging are used to separate the uranium concentrate from residual liquids.

f. The concentrate is dried at 400°F and is sometimes calcinated at 750 to 1100°F.

g. The concentrate or yellowcake is packaged in 208 liter (55 gallon) drums for shipment.

Large amounts of solid waste tailings remain following the removal of the uranium from the ore. A typical mill may generate 1,800 metric tons per day of tailings solids slurried in 2,500 metric tons of waste milling solutions. Over the lifetime of the mill, 100 to 200 acres may permanently be committed to store this material.

3.0 Release of radioactive effluent from uranium milling operations

The radioactivity associated with uranium mill effluents comes from the natural uranium and its daughter products present in the ore. During the milling process, the bulk of the natural uranium is separated and concentrated, while most of the radioactive daughter products of uranium remain in the uranium-depleted solid residues that are pumped to the tailings retention system. Liquid and solid wastes from the milling operation will contain low level concentrations of these radioactive materials, and airborne radioactive releases include radon gas and particles of the ore and the product uranium oxide. External gamma radiation levels associated with uranium milling processes are low, rarely exceeding a few mrem/y even at surfaces of process vessels.

The tailings retention system or "tailings pond" will have a radiological impact on the environment through the air pathway by continuous discharge of radon-222 gas (a daughter of radium-226), through gamma rays given off by radium-226, radon-222 and daughters as they undergo radioactive decay, and finally through air and water pathways if radium-226 and thorium-230 are blown off dried out areas of the tailings pond by wind or are leached from the pond into surface waters (10,11).

3.1 Airborne releases from the mill

Airborne releases from uranium milling operations include both particulate matter and gases. Dusts containing uranium and uranium

daughter products (principally thorium-230 and radium-226) are released from ore piled outside the mill. Dusts containing uranium and uranium daughter products are released from the ore crushing and grinding ventilation system, while a dust containing mostly uranium without daughters is released from the yellowcake drying and packaging operations. These dusts are discharged to the atmosphere by means of low stacks.

Uranium discharged to the air pathway as ore dust and as calcinated yellowcake and the radium-226 and thorium-230 discharged to the air pathway as ore dust are all considered insoluble aerosols. If they are inhaled, aerosols that are insoluble in body tissue fluids tend to remain in the pulmonary region of the lung so that the lung becomes the critical organ when the critical radiation dose is calculated.

The air flow through a typical crushing and grinding ventilation system is about 27,000 cfm; that through the yellowcake drying and packaging ventilation system is about 6,000 cfm. Because of the different air flows, dust characteristics, and locations within the plant, separate air cleaning equipment systems are usually required. A mill is usually considered to have two separate airborne effluent release streams, each with its own control systems, costs, and source terms.

Radon gas is released from the ore storage piles, the ore crushing and grinding ventilation system, leach tank vents, and the tailings retention system. There is no practical method presently identifiable

that will prevent the release of radon gas from uranium mills.

As an example, table 3.1-1 gives the estimated maximum release rates and conservative estimates of site boundary concentrations considering all potential sources of airborne dust fumes and mists as predicted for the Highland Uranium Mill in Wyoming (12,13). The capacity of the Highland Mill is about 2000 tons of ore per day.

3.2 Waterborne releases from the mill

The liquid effluent from an acid-leach process mill consists of waste solutions from the leaching, grinding, extraction, and washing circuits of the mill. These solutions, which have an initial pH of 1.5 to 2, contain the unreacted portion of the sulfuric acid used as the leaching agent in the mill process, sulfates, and some silica as the primary dissolved solids, along with trace quantities of toxic soluble metals and organic solvents. This liquid is discharged with the solids into the tailings pond.

Concentrations of radioactive materials predicted in the 2,500 tons per day of waste milling solutions from the Highland milling plant are shown in table 3.2-1 (12,13). Radioactive products of radon decay may also be present in small concentrations. Since the concentrations of radium-226 and thorium-230 are about an order of magnitude above the specified limits in 10 CFR 20, considerable effort must be exerted to prevent any release of this material from the site. The waste milling solution is, therefore, stored in the tailings retention pond which is constructed to prevent discharge

Table 3.1-1 (12,13)

Predicted airborne releases of radioactive materials from the Highland Uranium Mill, Powder River Basin, Wyoming[a]

Radionuclide	Release rate (Ci/y)	Site boundary A[b] Air concentration (pCi/m^3)	Site boundary B[c] Air concentration (pCi/m^3)
Uranium-natural	0.1	0.003	0.0004
Thorium-230 (insoluble)	0.06	0.001	0.0001
Radium-226 (insoluble)	0.06	0.001	0.0001

[a]Nominal mill capacity 2000 tons of ore/day (1200 MT of yellowcake per year).

[b]Distance to site boundary A assumed to be 800 m (2,600 ft.) west of mill.

[c]Distance to site boundary B assumed to be 5,200 m (12,700 ft.) east of mill.

Table 3.2-1

Concentrations of radioactive effluents in waste milling solutions from the Highland uranium mill (12,13) (acid leach process)

Radionuclide	Concentration (pCi/l)
Uranium-natural	800[a]
Radium-226	350
Thorium-230	22,000

[a]About 0.001 g/ml.

into the surface water system and to minimize percolation into the ground.

As an additional example, an analysis of waste milling solution for the Humeca Uranium Mill, which uses the alkaline leach process, is given in table 3.2-2 (9). The solution has a pH value of about 10 and contains sodium, sodium carbonate, sodium bicarbonate, and sulfate as the principal dissolved solids.

3.3 Airborne and waterborne releases from the mill tailings pond

The following discussion refers to the best of current procedures for handling mill liquid and solid wastes.

The waste milling solution is used to slurry the solid waste tailings to a tailings retention pond system which uses an impervious clay-cored earth dam combined with local topographic features of the area to form an impoundment. The clay-cored dam retention system permits the evaporation of most of the contained waste liquids and serves as a permanent receptacle for the residual solid tailings after the plant closes.

Toward the end of the operating lifetime of a tailings retention system, some of the tailings will no longer be under water and will dry out to form a beach (6). Wind erosion can then carry off tailings material as airborne particulate matter unless control measures are taken to prevent such erosion. Considerable quantities of radon will be emitted.

Table 3.2-2 (9)

Analysis of the waste milling solution
from the Humeca Uranium Mill
(alkaline leach process)

Radionuclide	pCi/l
Radium-226	240
Thorium-230	110
Uranium-238 and 234	46,000

Immediately after the retention system is put to use, it is to be expected that there will be small losses of radioactive mill waste liquids through and around the dam (9,12). This will be seen as surface water seeping from the foot of the dam. The radiological significance of this seepage will depend on the location of the pond. In arid regions, the seepage may evaporate before leaving the site, leaving the radioactivity entrained and absorbed on soil. Should the tailings pond be located next to a river, minor leakage might be immediately diluted sufficiently by the additional river water to meet relevant drinking water standards. Discharge of pond seepage into streams providing insufficient dilution and not under the control of the licensee would not be acceptable. In such cases, a secondary dam may be built below the primary dam to catch the seepage which may then be pumped back into the tailings ponds. It is sometimes stated that this seepage will diminish over a period of about 2 years because of the sealing effect from accumulation of finer particles between the sandstone grains (12).

Examples of estimates of the total quantities of radionuclides that would be released through and around the dam to surface waters are shown in table 3.3-1. Radium-226 is a radionuclide of concern because levels as high as 32 pCi/l (14) have been found in seepage from current operating mills. Assuming a seepage rate of 300 liters per minute, the concentration of radium-226 seeping into a stream of 140 liters per second (5 cubic feet per second) is approximately 1 pCi/l which is 1/5 of EPA's proposed interim Primary Drinking

Table 3.3-1

Estimates of quantities of radionuclides seeping through the impoundment dam of a uranium mill initially and at 2-1/4 years (12,13)

Radionuclide	Initial seepage per day	Seepage per day[a] after 2-1/4 years
Uranium	350 μCi	35 μCi to 3.5 μCi
Thorium-230	9,600 μCi	960 μCi to 96 μCi
Radium-226	150 μCi	15 μCi to 1.5 μCi

[a]Seepage assumed to be inhibited due to sealings effect from accumulation of fines between sandstone grains.

Water Regulations for radium-226 (15). In the applicant's environmental report for the Highland Uranium Mill (12,13), a seepage concentration of 350 pCi/l radium-226 was assumed.

Considerable quantities of mill waste solution seep downward into the soil beneath the impoundment area. Ordinarily this is not expected to result in offsite releases of radioactive materials because the radionuclides are strongly absorbed onto clay soil particles. They are removed from solution and considered to be permanently retained on the mill site. However, this is a continuing potential problem requiring monitoring programs to insure that there is no significant movement of contaminated liquids into the offsite environment (10).

4.0 The Model uranium mill

A model plant has been assumed in order to achieve a common base for the comparison of radiation doses, committed health effects, and radioactive effluent control technology.

The model mill is defined in terms of contribution to the nuclear fuel cycle that is consistent with current design and projected commercial industry practice (6). However, it is not necessarily representative of presently operating facilities. Characteristics of the model mill are assumed to be:

a. 600,000 MT ore milled per year,

b. 1,140 MT U_3O_8 as yellowcake produced per year,

c. use of the acid leach process,

d. a tailings retention pond system which uses a clay-core earth dam and local topographic features of the area to form the impoundment,

e. collection and return of any seepage through the dam to the tailings pond, and

f. location in a western State in an arid, low-population density region.

While reference (1) considered the radiological impact of seepage through a model clay core impoundment dam, it is now believed to be standard practice (6) to collect and return any such seepage to the tailings pond so that there are no routine liquid discharges of radionuclides to water pathways from mills. The cost of a seepage control system is nominal compared to the cost of the tailings

impoundment system itself.

Radiation dose rates and health effects that might result from the discharges of airborne radioactive effluents from the model mill are calculated using representative χ/Q values, dose conversion factors, model pathways, and health effect conversion factors that are similar to those for other facilities in the previous discussion of the fuel supply cycle. These factors and assumptions are discussed in Appendix A of reference (1).

Values of $(\bar{\chi}/Q)$ given in the ALAP Guides for milling of uranium ores (6) as derived from meteorological data near actual uranium mills range from 2.3 to 8.7 x 10^{-6} $s \cdot m^{-3}$ for a New Mexico site and range from 5.1 x 10^{-7} to 5.0 x 10^{-6} $s \cdot m^{-3}$ for a Wyoming site. The maximum values for these sites are in agreement with the value used in reference (1) of $(\bar{\chi}/Q)_{max}$ of 6 x 10^{-6} $s \cdot m^{-3}$. This value would apply to individuals living from 0.5 to 1.5 kilometers downwind from the mill site. Values of $(\bar{\chi}/Q)$ for individuals living outside the sector containing the prevailing wind will be up to 3 to 12 times lower. The committed lung dose will also be lower in direct proportion.

The operating lifetime of a uranium mill is commonly from 12 to 15 years, depending upon the local ore supply and the demand for uranium. In a few instances, the operating lifetime may be longer, and allowances are sometimes made for that possibility if it appears feasible. For the model mill, an operating lifetime of 20 years has been selected. After the mill shuts down, it is assumed that the tailings pond will be allowed to dry out and that the resulting pile will be stabilized and placed under perpetual care.

5.0 Radioactive effluents from a model uranium mill

Because regulations have not required uranium mills to report the total amounts of each radionuclide discharged per year, the source terms chosen for model mills are based on somewhat limited operational information (6). Source terms listed in table 5.0-1 are believed to be reasonably accurate estimates of the quantities of radioactive materials discharged to air pathways from model mills with base case controls. The controls assumed as the base case consist of an orifice scrubber on the crusher and fine ore bins, and a wet impingement scrubber in the yellowcake drying and packaging areas. The milling procedures are so similar for acid and alkaline leach processes that source terms for the two types of mills are considered identical, except that the alkaline leach process does not remove thorium from the ore so that, in this case, there is very little thorium-230 as an impurity in the yellowcake dust.

The model mill is assumed to use clay-core dam impoundment technology for tailings with a catch basin if required to contain seepage through the dam. Unless the impoundment area is lined with an impervious material, considerable quantities (as much as 10 percent) of the liquid effluent from the mill will leak out through the bottom of the pond. However, because of the ion-exchange properties of most soils, radionuclides dissolved in this effluent will attach to soil particles and will not reach offsite locations or ground water. The model mill is considered, therefore, to deliver no radiation exposure to members of the general population through liquid pathways.

Table 5.0-1

Discharge of Radionuclides to the Air from Model Uranium Mills[a] and Tailings Piles (6)
With Base Case Controls

Radionuclide	Chemical or Physical State	Acid Leach Mill Source Term (mCi/y)	Alkaline Leach Mill Source Term (mCi/y)
Uranium-238 and 234	ore dust (oxides)	9.0	9.0
Radium-226	ore dust	4.5	4.5
Thorium-230	ore dust	4.5	4.5
Uranium-238 and 234	yellowcake (oxides)	170.	170.
Radium-226	yellowcake	0.2	1.7
Thorium-230	yellowcake	4.7	---
Uranium-238 and 234	tailings sand (0-10 μm)	0.2 - 0.8	0.3 - 2.2
Radium-226	tailings sand (0-10 μm)	1.3 - 4.2	2.3 - 1.5
Thorium-230	tailings sand (0-10 μm)	1.4 - 4.5	2.4 - 1.5

[a] 6% moisture ore, radion-222 releases excluded

Each site must be evaluated individually. If the ground water table is high and the soil is low in ion exchange capacity so that it becomes likely that radium-226 and thorium-230 will escape from the tailings impoundment into underground waters, then the pond area could be lined with an impervious membrane of asphalt to minimize seepage. Acid wastes would have to be neutralized beforehand to prevent damage to this type of liner.

The amount of radioactive particulate material removed from the tailings beach by wind erosion is believed to depend on the area and topography of the beach, the wind velocity, and particle size distribution of the tailings (6). Estimates of this source term are shown in table 5.0-1 and include only the alpha emitting radionuclides U-238, U-234, Th-230, and Ra-226 which are the significant contributers to the lung dose. While this estimate is derived from theoretical consideration rather than experimental measurements at actual tailings beaches, it is believed to be the best available estimation for this source term. Particles greater than 10μm in diameter are not considered to be respirable particles and are not included in the inhalation source term pathway. Historically, windblown tailings have caused elevated gamma exposure levels around piles, but the inhalation pathway is usually considered to be the critical pathway because levels of control sufficient to limit radiation exposure through the inhalation pathway will also prevent, to a significantly greater degree, exposures through the ground deposition whole body exposure pathway.

The ALAP document developed for the Nuclear Regulatory Commission (6) provides an estimation of the relative ratio of the respirable particles (< 10 μm) to larger particles (10-80 μm) blown off the tailings beach of a well-managed tailings impoundment system. This ratio averages about 1 and varies from 0.4 to 1.4 depending on specifics of the milling process and other variables. It can be estimated that 1 mCi/y of alpha emitting insoluble 0-10 μm particles removed by wind from a typical pile would deliver a dose equivalent of approximately 1 mrem/y to the lungs of a person living one kilometer downwind of the pile. At the same time, if it is assumed that 1 mCi/y of 10-80 μm particles are deposited in a ring ½ to 1½ km from the pile, there would result a surface contamination level of about 0.2 nCi/m^2. The Ra-226 component of this surface contamination would cause a whole body gamma-ray exposure level of about 10 μrem/y. After 20 years of operations, each contributing to surface contamination at such a rate, this exposure might increase to as much as approximately 0.2 mrem/y. This is still a factor of 5 smaller than the lung dose from the inhalation pathway indicating that inhalation is the critical exposure pathway.

6.0 Radiological impact of a model mill

Estimates of the radiation doses to individuals through the air pathway in the vicinity of an acid leach model mill using base case controls from routine emissions are shown in table 6.0-1. The estimated collective lung doses to the population in the vicinity of an acid leach mill are given in table 6.0-2. The collective lung dose is determined by summing the average individual radiation dose equivalent to individuals living within 80 kilometers of the mill over the total population within 80 kilometers of the mill. The models for the dispersion and dose calculations are discussed in detail in Appendix A of reference (1). Based on the information available at the time that analysis was performed, an effective half-life of 1,000 days was used for insoluble class Y compounds in the pulmonary region of the lung in calculating the lung doses from mill emissions. In accordance with what is now becoming accepted practice, in this report all dose conversion factors are calculated using a 500-day effective half-life (20) and are, therefore, reduced by a factor of two from the previously used values.

It is assumed that food consumed by individuals living near the mill is not produced locally so that exposure through food chains is not significant compared to lung exposures resulting from the direct inhalation of radioactive particulate matter. The radon exposure pathway was excluded from this report.

Because there are no liquid releases from the model mill, there is no projected radiological impact through water pathways.

Table 6.0-1

Radiation Doses to Individuals due to Inhalation
in the Vicinity of a Model Mill with Base Case Controls

Radionuclide	Source Term (mCi/y)	Critical Organ	Dose Equivalent to Critical Organ	
			Individual at Plant Boundary (mrem/y)	Average Individual Within 80 km (mrem/y)
Uranium-234 and 238	180	Lung	170	3.9×10^{-2}
Thorium-230	15	Lung	15	3.4×10^{-3}
Radium-226	10	Lung	15	2.2×10^{-3}
Total	205		200	4.5×10^{-2}

Table 6.0-2

Collective Dose to the General Population in the Vicinity of a Model Mill with Base Case Controls

Radionuclide	Source Term (mCi/y)[a]	Pathway	Critical Organ	Collective Critical Organ Dose[b] (person rem/y)
Uranium-234 and 238	180	Air	Lung	2.2
Thorium-230	15	Air	Lung	0.2
Radium-226	10	Air	Lung	0.1
			Total	2.5

[a]Releases to water pathways assumed equal to zero, and doses from radon-222 are not included.

[b]The population model for the model mills assumes that 5.5×10^4 persons are exposed within 80 km of the mill site.

7.0 Health effects impact of a model mill

Potential health effects to members of the general population in the vicinity of a model mill using base case controls are estimated to be 0.0002 lung cancers per year of operation or 0.005 lung cancers for 30 years of operation. The models used for the calculation of health effects are given in Appendix A of reference (1).

8.0 Control technology for uranium milling

8.1 Airborne effluent control technology

Hazardous airborne gaseous and particulate wastes are generated in the milling operation from a number of different sources. The major areas of the milling operations in which gaseous and particulate matter effluents must be controlled are the ore crushing area, the fine ore bins, and the yellowcake drying and packaging areas. Mills often prefer to use multiple dust collection systems rather than design a single, more elaborate system. There will usually be two or more ore dust collectors and separate systems for the yellowcake dryer and for the yellowcake packaging rooms.

Dust collector systems that are currently used or that can be adapted for use by uranium mills are discussed in reference (6). They are for the most part control technologies that have been proven and are standard industrial equipment.

Briefly, these treatment methods are:

a. Orifice Scrubbers - The dusty air flows through a stationary baffle system coated with a sheet of water. The dust particles penetrate the water film and are captured.

b. Wet Impingement Scrubber - The dusty air carrying water droplets added by preconditioning sprays passes through perforated plates to atomize the water and to wet the dust. Particles are then collected by impingement on baffle plates and a vaned demister.

c. Venturi Scrubber - The dusty air is passed through a venturi, increasing its velocity. Water is added which atomizes in the gas

stream and collects the dust by impingement. The wetted dust is removed by demisters. Raising the pressure drop across the venturi increases the collection efficiency, but this requires higher energy levels and raises the costs.

d. Bag Filters - These filters are made of woven or felted fabric and have high collection efficiencies provided the air being filtered is cool and dry.

e. HEPA Filters - These filters are made of fiber glass. They have very high efficiencies but have a number of limitations; in particular, they can only be used in conjunction with a prefilter and on dry air streams.

Current practice involves the use of wet dust control systems although several mills use bag filters for air flows from ore handling and from the yellowcake packaging area. The costs and percent effluent reduction for the various control systems suitable for effluent streams of the model mill are given in table 8.1-1 (6).

Particulate material can be prevented from being windblown off the tailings pile beach by back filling with overburden and, as an interim measure, by chemical stabilization by spraying with various polymers or petroleum derivatives. Chemical stabilization is expected to last about a year and must be repeated on a regular schedule (6). Although no specific value is given for the percent reduction of airborne effluent by these control measures, it is assumed that they would reasonably reduce the tailings beach source

Table 8.1-1

Cost and Efficiencies of Control Technology for Mills[a]

Control Method	Capital Cost (dollars)	Annual Operating Costs (dollars)	Present Worth[b] (dollars)	Percent Effluent Reduction (%)
A. Gaseous (Crusher and Fine Ore Bins)				
1. Orifice Scrubber	101,000	7,200	172,000	93.6
2. Wet Impingement Scrubber	116,000	8,600	200,000	97.9
3. Low Energy Venturi Scrubber	173,000	17,000	340,000	99.5
4. Bag Filters	300,000	21,000	506,000	99.9
B. Gaseous (Yellowcake Drying and Packaging)				
1. Wet Impingement Scrubber[c]	(35,000)	(3,500)	(69,000)	97.9
2. Low Energy Venturi Scrubber[c]	(35,000)	(6,900)	(103,000)	99.5
3. High Energy Venturi Scrubber	46,000	15,000	193,000	99.9
4. High Energy Venturi Scrubber + HEPA Filters	106,000	22,000	322,000	>99.99
C. Liquids, Solids, and Windblown Particulate Matter				
1. Clay Core Dam Retention System with Seepage Return and 0.6 Meters (2 feet) of Earth Cover Plus Rock Stabilization[e]	2,250,000	50,000[d]	2,750,000	----
2. Chemical Control of Windblown Dust from Tailings Pond Beach	63,000	8,000	142,000	100.00
3. Asphalt Liner for Tailings Pond[e]	800,000	0	800,000	100.00

[a] 1974 dollars; radon-222 emissions not included.
[b] Present Worth = Capital Cost + (Annual Cost x 9.818); 8% Discount Rate, 20 yr. Plant Lifetime.
[c] Costs for all yellowcake effluent control are shown for completeness. In actual practice, the value of recovered product more than compensates the cost of control options B1 and B2.
[d] Includes investment to provide for perpetual care.
[e] 160 acre tailings pile.

term by greater than a factor of 10 (i.e., to < 1 mCi/y).

Other sources of gas and dust which can be controlled are the open pit mine haul roads and the ore storage and blending piles. In some instances, the moisture content of the ore as mined may be sufficiently high to eliminate most dust formation in the ore storage and blending area; due to insufficient information, this case will not be considered at present beyond stating that the problem appears potentially significant and that it can be controlled in principle through sprinkling and by use of wind breaks. Dust generation on ore haul roads can also be controlled by sprinkling.

8.2 Waterborne effluent control technology and solid waste control technology

New mills in the Rocky Mountain area are using impoundment technology in order to approach zero liquid discharge levels. Recent practice for treatment of solid and liquid wastes is to select a natural ravine which has three basic qualifications for waste storage: (a) limited runoff, (b) dammable downstream openings, and (c) an underlying impermeable geologic formation. Diversion systems (dams and canals) are used to limit the runoff area emptying into the storage basin to prevent flooding of the ravine during a postulated 50-100 year maximum rainfall occurrence. The tailings dam, which should be clay-cored, is keyed into the underlying impermeable formation, which, in one example, is a low porosity shale. Tailings solids slurried in waste process liquids are pumped to the impoundment reservoir for storage and liquid reduction. Liquid reduction is accomplished primarily by evaporation, but also by seepage through

the dam, the reservoir walls and floor. By filling a dammed natural depression with tailings, a relatively flat, stable contour is achieved. There usually will be a continuing problem with control of upstream drainage. Diversion ditches to control this drainage will require perpetual maintenance.

Two methods for seepage collection and return are being considered for new mills. In that situation when an impermeable geological formation underlies the retention system, seepage can be collected in a catch basin located at the foot of the dam. The collected seepage can be pumped back into the retention pond thus eliminating release to the offsite environment. In that situation where either an underlying impermeable geological formation is not existent or is not continuous, vertical seepage may occur to the underlying ground water formation. Wells may be drilled downstream of the retention system into the subsurface formations where seepage will collect, and this water is pumped back to the retention system. Such a system requires specific favorable subsurface conditions. In both cases, these control costs are small compared to the cost of the clay core dam retention system (1).

Impoundment of solids is being accomplished at many older mills by construction of a dike with local material and then filling the diked area with slurried tailings. When full, the height of the dike is increased with dried tailings to accommodate even more waste material. Process liquids which overflow the tailings dike or seep

through the dike have sometimes been routed through a treatment system and discharged to the environment. The diking procedure, which is less costly initially, creates an above-ground pile of tailings which is difficult and costly to stabilize. While the mill is operating, this type of pile is also subject to wind and water erosion. Field studies at tailings piles after mill shutdown have shown high gamma radiation levels in the vicinity of such piles, elevated radium-226 levels in water supplies, and high airborne levels of thorium-230 and radium-226 due to wind blown tailings (16,17,18,19). For these reasons, new mills are not likely to be built using this type of solid waste control.

After the mill shuts down, stabilization of the tailings pile after it has dried out requires contouring of the tailings area to lessen side slopes, establishing drainage diversion, covering with nonradioactive material, and revegetating the area. In semiarid regions it may be necessary to initially irrigate the pile to achieve vegetation growth; in arid areas, vegetative cover without perpetual irrigation will not be possible. Other types of stabilization may also be feasible. One method involves the covering of the tailings with large aggregate gravel from a river bottom. Silt fines which accompany the river gravel will blow away in a short time leaving what is effectively a wind-proof rip rap, thus significantly reducing or eliminating migration of the tailings outside the controlled area. The costs of such stabilization has recently been estimated (6) at $350/acre-ft for earth, and $2,000/acre-ft for rock. The stabilization

of a grade level diked tailings pile is more costly and is probably less effective compared to a depression fill tailings pile because of difficulties faced in contouring, covering, and revegetating the potentially steep side slopes.

Uranium mill tailings piles are long half-life, low-level radioactive wastes. As such, they will require perpetual care. This will include occasional inspection and maintenance to insure integrity of the stabilizing cover, fencing, and of the warning signs around the pile. A perpetual care fund should be included as part of the cost of the control technology to pay for this care. The maintenance associated with perpetual care of a stabilized dike system would probably be higher than that for the depression fill system, since there is tendency toward collapse of side slopes and possibly inadequate drainage of precipitation from the pile.

9.0 Effluent control technology for the model mill

Typical current effluent control systems were assumed for the model mill. They were:

a. Ore Crusher and Ore Bin Dust - Orifice Scrubber.

b. Yellowcake Dryer and Packaging Dust - Wet Impingement Scrubber.

c. Liquid and Solid Waste - Clay core dam retention system (160 acres) with seepage return and exposed beach. To be stabilized with 2 feet of earth cover and 6 inches of rock cover.

The radiological impact of total airborne effluent versus successively more effective control systems for a model uranium mill are listed in table 9.0-1. Each improvement in control is the most cost-effective available at that level of control.

The output of the model plant using base case contols is 1,140 tons of yellowcake per year of which approximately 1 percent is recovered by the wet impingement dust collector system during drying and packaging operations (6). The value of 11,000 kilograms (24,000 lbs) of recovered yellowcake more than compensates for the cost of this control system. The low energy venturi scrubber is 1.6 percent more efficient than the wet impingement scrubber and will recover an estimated additional 200 kilograms (440 lbs) of yellowcake per year. The value of this additional recovered yellowcake is approximately equal to the increased annual operating costs of the low energy venturi scrubber as compared to the wet impinger. The present worth of these systems are, therefore, not included as a control cost for the model mill.

Table 9.0-1

Radiological Impact of Airborne Effluents versus Control Costs for a Model Uranium Mill

Controls	Source Term[a]	Maximum Lung Dose to an Individual[b]	Present Worth
(Table 8.1-1)	(mCi/y)	(mrem/y)	(1974 $/facility)
None	>20,000	>20,000	0
A1; B1[c][d]	205	200	172,000
A1; B2[d]	75	73	172,000
A1; B3	35	34	262,000
A2; B3	25	24	290,000
A2; B3; C2	15	15	432,000
A2; B4; C2	6	6	561,000
A3; B4; C2	1.5	1.5	701,000
A4; B4; C2	0.3	0.3	867,000
C1[c]	0	0	2,750,000

[a] Alpha emitting radionuclides as insoluble, respirable particulate matter excluding radon and daughters.
[b] For the assumed worst case of an individual permanently occupying a location exhibiting a χ/Q of 6×10^{-6} s/m^3.
[c] Assumed current level of controls for new mills.
[d] Costs for control options B1 and B2 not included, since they are more than compensated for by the value of product recovered.

10.0 Retrofitting control technology to operating uranium mills

The cost and practicality of retrofitting control technology systems to an operating uranium mill if it should be required to comply with EPA's proposed standards (40 CFR 190) was not included in reference (6). The costs are judged to be approximately the same order of magnitude as the costs to install the same control systems in a new mill.

10.1 Retrofitting control measures to operational tailings ponds

The cost and practicality of retrofitting control measures to operational tailings ponds that do not use clay core dam impoundment technologies must be considered on an individual basis. EPA has reviewed the available literature concerning 17 operational uranium mills. Based on this survey, it was concluded that of the 17 mills, the presumption of evidence indicated that 7 would be in compliance with the Agency's proposed (40 CFR 190) standards while 10 mills would require remedial measures of varying degrees to comply with the standards.

Three mills, opened since 1971, use advanced impoundment technology designed to prevent loss of tailings material. This includes use of a natural basin with a clay core earth dam across the opening to impound the tailings. The tailings are below grade, protected from wind erosion, and depending on the season, are often either moist or actually covered with water which effectively provides additional protection against wind erosion. These mills are in

remote locations with no residence within one mile. The use of advanced tailings impoundment techniques and the remoteness of the sites should be sufficient to insure compliance during the active life of these mills.

Four mills are located in remote areas where no one is believed living within about one mile of the site. In addition, the active tailings ponds are either impoundments in natural basins or, if above ground, the sides are stabilized with rock. There may be inactive tailings pile areas on several of these sites that could be stabilized at this time. The combination of reasonable tailings impoundment techniques and large distance to the nearest resident should be sufficient to insure compliance as long as these conditions are in effect.

For the remaining 10 mills, members of the general population are believed to reside within 1 mile of the sites. An evaluation of each tailings pile and pond will therefore be required to determine compliance with EPA standards because a recent study (21) has indicated that windblown tailings from inactive unstabilized tailings piles has caused elevated gamma exposures > 25 mrem/yr at distances up to one mile from the pile. Critical pathways to be considered are inhalation of insoluble alpha-emitting radioactive particles windblown from the pile (11), deposition of radioactive particles windblown from the pile causing whole body exposure from gamma rays (21), and radioactive contamination of drinking water by seepage from the tailings pond or by discharge of mill process water (10).

Five of these tailings piles are judged to require slight, if any, remedial measures to comply with the standard. These are relatively small piles in remote locations where tailings pile dikes have been constructed of earth and clay rather than tailings sand.

The other five tailings piles are judged to require major remedial measures to comply with EPA standards. These are, in general, large tailings piles located above grade with dikes constructed of tailings sand and where persons live in close proximity to the pile.

It is not appropriate for EPA to specify in detail an implementation plan for each mill to comply with the proposed standards. The Agency is on record as stating that the standards should be implemented with regard to operational tailings piles by requiring proper and reasonable dust control measures. In practice, this means that all tailings material should be stabilized, covered, or otherwise controlled by chemical stabilization or by keeping the tailings under water or at least moist. In the absence of very large controlled areas, or unless individuals live more than a mile from the tailings pile, the tailings pile source term must be kept very low ($<$ 1 mCi/yr) by use of these procedures. Otherwise, a detailed site specific dose assessment (modeling) effort and perhaps environmental monitoring will be required to demonstrate compliance.

In the event the implementation proceedings conducted by the NRC or an agreement State determine that a specific tailings pile is not in compliance, a variety of reasonable remedial measures are available to the mill operator at reasonable cost. These measures include:

1. Enlarge the restricted area around the site and move people living near the site to more distant locations.

In some instances, the closest residents are employees of the company and their families living in trailers next to the site boundary. It would appear that moving these people would be a practical protective action to take.

2. Cover and stabilize all unused tailings piles and ponds.

There are piles and ponds at some sites that have been filled to capacity. These can be stabilized immediately to reduce wind blown tailings. This is especially important for carbonate leach process tailings piles which contain finer material and are believed to be more susceptible to wind erosion.

3. Cover and stabilize tailings pile dikes constructed of tailings sands. This may be accomplished by covering with earth and use of rock as rip rap or, temporarily, by chemical sprays.

The sand dikes at one active tailings pile have been stabilized using crushed rock from local sources. The dikes at the inactive tailings pile at Tuba City (22) were temporarily stabilized at reasonable cost using chemicals that bound the surface sands together to form a hard crust. They were sprayed with an elastomeric polymer

forming a 2" crust cover for about $760 an acre (1975 dollars) of dike. While this cover eventually broke up, due in part to lack of pedestrian access control, chemical stabilization of dikes should be effective under more controlled conditions for several years. Additional applications would be necessary. Continual maintenance consisting of patching small holes before they become large holes would probably be effective in increasing the overall lifetime of the chemical stabilization.

When a mill is shut down and before the license is terminated, it is NRC policy that the tailings pile must be stabilized. At the present time, this entails covering the pile with earth and either establishing vegetation or using rock rip rap to protect the cover from wind erosion. Because it must be done eventually, it may be more cost effective to use earth stabilization of sand dikes at operational piles rather than use temporary chemical stabilizers that must be reapplied every few years.

4. Stabilize the tailings pond beaches, i.e., the material contained inside the dikes. This may be done with chemical sprays, by sprinkling with water, or by covering with water or backfill.

Tailings ponds are often so large that only a portion of them are under water continuously. Large areas may dry out and become susceptible to wind erosion. If these dry areas are firm enough to hold heavy equipment, it should be possible to cover them with backfill. Otherwise, chemical stabilizing applied by sprinklers

can be used. This will be a temporary measure requiring reapplication every few years. The tailings beach at the Tuba City pile (22) was stabilized with calcium magnesium lignosulfonate at a cost of about $430 per acre (1975 dollars). If enough water is available, continuous sprinkling can be used to keep the surface wet and prevent wind erosion.

The State of Texas, which is an agreement State, has determined that wind blown tailings from an active tailings pile near Fall City, Texas, must be controlled. As the dikes for this pile were constructed using sandy clay rather than tailings sand, this will prove to be an example of control of a tailings beach by some means as sprinkling, backfill, or chemical cover.

5. Close down the tailings pond and stabilize it; construct a new tailings pond using advanced tailings impoundment techniques.

This may be the best procedure when the tailings pond is of such configuration (i.e., very high dike walls) that it must be reshaped before stabilization procedures are effective and where the mill is expected to continue in operation for some time. Multiple tailings ponds on a single site are common practice.

The reasonableness and cost of stabilizing an active uranium mill tailings pond may be examined by considering a "model" tailings pond. A model pond is assumed to be 100 acres in total area and contained by tailings sand dikes 7 meters high and 20 acres in area with a dry beach of 50 acres. The remainder of the area inside the

dikes will be under water or continuously wet. All of the following costs are given in 1975 dollars.

By analogy with the experience with the Tuba City pile (22), it would require $15,000 to chemically stabilize the dikes and $22,000 to chemically stabilize the beach. Five stabilizations (biannually over a 10 year period) would imply total costs of $110,000 to stabilize the beach and $75,000 to stabilize the dikes.

As an alternative, the dikes could be permanently stabilized by earth. If it is assumed that this would require the covering of one side of a 2,600 meter long dike by $50m^3$ of earth per meter of dike at a cost of $1 per m^3, then the cost would be about $130,000. There would be additional costs of establishing a vegetation cover or for rock rip rap. If the cost of stabilizing the dikes is considered as part of the final stabilization costs, the net cost of complying with the standard would then be $110,000, the cost to chemically stabilize the beach.

Costs (1975 dollars) for stabilizing inactive piles vary (6,22). Arizona Copper procedures report that costs of stabilizing with a 12" soil cover were about $1,600 per acre. Stabilization of the Monticello, Utah, pile which involved considerable moving and contouring of the tailings sand, with 12" to 24" of soil and with vegetative planting, cost $7,300 per acre. Union Carbide has calculated their cost of stabilization at $1,300 to $5,100 per acre for a minimum cover depth of 6" with costs depending on grading and

distance that rock and rip rap must be hauled. The *ALAP Guide for Milling of Uranium Ores* (6) estimated cost of $510 per acre foot for earth and $3,000 per acre foot for rock.

The Agency concludes that tailings piles at active uranium mills can meet the proposed standard 40 CFR 190 by the application of reasonable and proper remedial measures. The cost of implementing the standard will be small compared to the eventual overall costs of stabilizing the tailings sands.

REFERENCES

(1) U.S. ENVIRONMENTAL PROTECTION AGENCY. Environmental Analysis of the Uranium Fuel Cycle, Part I - Fuel Supply, EPA-520/9-73-003-B. Office of Radiation Programs, Environmental Protection Agency, Washington, D.C. 20460 (October 1973).

(2) U.S. ENVIRONMENTAL PROTECTION AGENCY. Environmental Analysis of the Uranium Fuel Cycle, Part II - Nuclear Power Reactors, EPA-520/9-73-003-C. Office of Radiation Programs, Environmental Protection Agency, Washington, D.C. 20460 (November 1973).

(3) U.S. ENVIRONMENTAL PROTECTION AGENCY. Environmental Analysis of the Uranium Fuel Cycle, Part III - Nuclear Fuel Reprocessing, EPA-520/9-73-003-D. Office of Radiation Programs, Environmental Protection Agency, Washington, D.C. 20460 (October 1973).

(4) U.S. ENVIRONMENTAL PROTECTION AGENCY. Environmental Radiation Protection for Nuclear Power Operations, 40 CFR Part 190. Federal Register, Volume 40, No. 109 (Thursday, May 29, 1975).

(5) U.S. ATOMIC ENERGY COMMISSION. Draft Environmental Statement Related to the Utah International, Inc., Shirley Basin Uranium Mill, Shirley Basin, Wyoming, Docket No. 40-6622. Fuels and Materials Directorate of Licensing. U.S. Atomic Energy Commission (June 1974).

(6) SEARS, M. B., et al. "Correlation of Radioactive Waste Treatment Costs and the Environmental Impact of Waste Effluents in the Nuclear Fuel Cycle for Use in Establishing 'as Low as Practicable' Guides - Milling of Uranium Ores," ORNL-TM-4903, Two Volumes. Oak Ridge National Laboratory, Oak Ridge, Tennessee 37830 (May 1975).

(7) TEKNEKRON, INC. "Scoping Assessment of the Environmental Health Risk Associated with Accidents in the LWR Supporting Fuel Cycle - Draft Report," EPA Contract No. 68-01-2237. Teknekron, Inc., Washington, D.C. 20036 (September 2, 1975).

(8) "Controlling the Radiation Hazard from Uranium Mill Tailings," Report of the Congress by the Comptroller General of the United States, RED-75-365 (May 21, 1975).

(9) U.S. NUCLEAR REGULATORY COMMISSION. Final Environmental Statement Related to the Operation of the Humeca Uranium Mill, NUREG-0046, Docket No. 40-8084. Fuels and Materials Directorate of Licensing, U.S. Nuclear Regulatory Commission, Washington, D.C. 20545 (April 1976).

(10) U.S. ENVIRONMENTAL PROTECTION AGENCY. Water Quality Impacts of Uranium Mining and Milling Activities in the Grants Mineral Belt, New Mexico, EPA-906/9-75-002. U.S. Environmental Protection Agency, Region VI, Dallas, Texas 75201 (September 1975).

(11) SWIFT, J. J., J. M. HARDIN, AND H. W. CALLEY. Potential Radiological Impact of Airborne Releases and Direct Gamma Radiation to Individuals Living Near Inactive Uranium Mill Tailings Piles, EPA-520/1-76-001. Office of Radiation Programs, U.S. Environmental Protection Agency, Washington, D.C. 20460 (January 1976).

(12) HUMBLE OIL AND REFINING COMPANY. Applicant's Environmental Report, Highland Uranium Mill, Converse County, Wyoming. Minerals Department, P.O. Box 2180, Houston, Texas 77001 (July 1971).

(13) HUMBLE OIL AND REFINING COMPANY. Supplement to Applicant's Environmental Report, Highland Uranium Mill, Converse County, Wyoming. Minerals Department, P.O. Box 2180, Houston, Texas 77001 (January 1972).

(14) U.S. ENVIRONMENTAL PROTECTION AGENCY. Evaluation of the Impact of the Mines Development, Inc., Mill on Water Quality Conditions in the Cheyenne River. EPA Region VIII, Denver, Colorado 80203 (September 1971).

(15) U.S. ENVIRONMENTAL PROTECTION AGENCY. Interim Primary Drinking Water Regulations - 40 CFR Part 141. Federal Register, Volume 40, No. 158 (Thursday, August 14, 1975).

(16) SNELLING, R. N. AND S. D. SHEARER, JR. Environmental Survey of Uranium Mill Tailings Pile, Tuba City, Arizona. Radiological Health Data and Report 10:475-487 (November 1969).

(17) SNELLING, R. N. Environmental Survey of Uranium Mill Tailings Pile, Monument Valley, Arizona. Radiological Health Data and Report 11:511-517 (Ocotber 1970).

(18) SNELLING, R. N. Environmental Survey of Uranium Mill Tailings Pile, Mexican Hat, Utah. Radiological Health Data and Report. 12:17-28 (January 1971).

(19) U.S. ENVIRONMENTAL PROTECTION AGENCY. Radium-226, Uranium, and Other Radiological Data from Water Quality Surveillance Stations Located in the Colorado River Basin of Colorado, Utah, New Mexico, and Arizona, January 1961 through June 1972. 8SA/TIB-24, EPA Region VIII, Denver, Colorado (July 1973).

(20) INTERNATIONAL COMMISSION ON RADIOLOGICAL PROTECTION. The Metabolism of Compounds of Plutonium and Other Actinides, Adopted May 1972, ICRP Publication 19. Pergammon Press, New York (1972).

(21) DOUGLAS, R. L. AND J. M. HANS, JR. "Gamma Radiation Surveys at Inactive Uranium Mill Sites." Technical Note ORP/LV-75-5. U.S. Environmental Protection Agency, Washington, D.C. 20460 (August 1975).

(22) HAVENS, R. AND K. C. DEAN. Chemical Stabilization of the Uranium Tailings at Tuba City, Arizona. Report of Investigation 7288 (RI). Bureau of Mines, U.S. Department of Transportation, Washington, D.C. (August 1969).

I. FUEL SUPPLY

B. Transuranium Effluents from Re-Enriching or Refabricating Reprocessed Uranium

1.0 Introduction

Uranium feed material, either to an enrichment plant or to a fabrication plant, which has been previously used as fuel in a nuclear power plant may still contain trace amounts of radioactive impurities after decontamination at fuel reprocessing.

Spent reactor fuel is typically allowed to decay either at the reactor plant site or at the chemical reprocessing plant site a minimum decay time of 150 to 180 days. The fuel is then dissolved in nitric acid and processed by solvent extraction.

The UF_6 product from chemical reprocessing will contain small quantities of fission products and transuranium isotopes. Specifications have been published by the Atomic Energy Commission (1) which indicate the maximum acceptable limits for radioactivity resulting from these impurities. These are: gross alpha due to transuranium isotopes -- 1500 dis/min/(g of U); gross beta due to fission products and transuranium isotopes -- 10% of the beta activity of aged normal uranium; and gross gamma due to fission products and transuranium isotopes -- 20% of the gamma activity of aged normal uranium.

Such processed uranium may then be sent to the enriching plant. The above maximum acceptable limit for gross alpha radioactivity can be translated into the following typical distribution (assuming total solvent extraction plus conversion decontamination factors (2) for

neptunium of 10^3, plutonium - 10^7, and transplutonium - 10^9): neptunium - 9×10^2 alpha dis/min/(g of U), plutonium - 5×10^2 alpha dis/min/(g of U) and transplutonium - 1×10^2 alpha dis/min/(g of U). The actual alpha activity distribution will depend on reactor type, fuel irradiation history, type of chemical process, and the additional conversion and purification operations used in converting uranyl nitrate hexahydrate to UF_6, but should not vary significantly from these typical values.

The above beta-gamma radioactivity limits are based on gross radioactivity measurements related to the background of aged normal uranium. The beta activity limit is based on direct measurement of the beta counting ratio, and therefore depends upon the variation of counting efficiency with energy. The gamma specification is based on a comparative measurement using aged natural uranium and a high pressure ion chamber. A reasonable gamma comparison with natural uranium can therefore be equated to 20% of the gamma power of aged normal uranium. The gamma power of aged normal uranium can be calculated to be 269 MeV/sec/(g of U), which results in a gamma specification of approximately 54 MeV/sec/(g of U).

Typical reactor return material has shown the fission product gamma radioactivity distribution given in Table 1.0-1. Technetium and uranium beta and uranium and transuranium alpha radioactivity levels found are also indicated.

TABLE 1.0-1

CALCULATED GAMMA RADIOACTIVITY DISTRIBUTION OF FISSION PRODUCTS, GAMMA AND BETA RADIOACTIVITY OF ALL FISSION PRODUCTS, AND ALPHA RADIOACTIVITY OF TRANSURANIUM AND URANIUM ISOTOPES[a](2)

Isotope	% of Gamma	Typical distribution based on gamma specification (γ MeV/sec/g U)	Radioactivity (Ci/g U)
		γ Radioactivity	
Ru-106	75	40.0	42.2×10^{-10}
Zr-95-Nb-95	22	12.0	9.3×10^{-10}
Cs-137	1	0.054	$\sim 6.9 \times 10^{-11}$
Ce-144	1	0.054	$\sim 6.9 \times 10^{-11}$
Other fission products[b]	1	0.054	$\sim 6.9 \times 10^{-11}$
		β Radioactivity	
Tc-99	--	--	3.16×10^{-8}
U-237	--	--	2.41×10^{-6}
		α Radioactivity	
Transneptunium[c]	--	--	2.43×10^{-10}
Np-237	--	--	4.32×10^{-10}
U-232	--	--	9.01×10^{-9}
U-233	--	--	4.70×10^{-11}
U-234	--	--	7.59×10^{-7}
U-235	--	--	1.71×10^{-8}
U-236	--	--	2.88×10^{-7}
U-238	--	--	3.14×10^{-7}

[a]Power reactor returns are based on an initial feed of 3.2% U-235, specific power 30 MW/metric ton uranium, exposure 33,000 MW day/metric ton, decay 180 days.

[b]These fission products consist principally of Sr, Sb, Sn, and Te.

[c]Pu-238, Pu-239, Pu-240, Pu-241, Pu-242, Am-241, Cm-242, Cm-244

These radioactivities can be used to determine the annual inputs and system equilibrium concentrations at an enrichment plant (Table 1.0-2). The technetium-99 beta will contribute the remaining beta radioactivity and is also included. Plutonium and neptunium concentrations are based on the above specifications for transuranium isotopes in the reactor return material.

2.0 Gaseous Diffusion Operating Experience

Gaseous diffusion operating experience, although of almost 30 years duration, has been very limited in terms of large throughputs of power reactor returns. Although there has been considerable production reactor material returned to the cascade, irradiation exposure of that material has been ten- to twenty-fold less than that for power reactors. Experience to date has indicated the following:(2)

1. A significant quantity of all non-uranium radioactivity (neptunium, plutonium, and fission products) is retained in the feed cylinder (UF_6 tank) and will be removed when and where the returned cylinder is washed.

2. PuF_6 and NpF_6 are easily reduced and therefore removed by trapping with CoF_2, MgF_2, NaF, Cryolite, etc.

3. Fission product removal (except technetium) by these traps may also be significant. However, good data based on low-level radioactivity feed materials have not been obtained.

4. Technetium, compared to other fission or alpha emission products, is less likely to be removed by any process. Experience at ORGDP* indicates that technetium release to the environment would be 10% of feed to the liquid effluent and 1% of feed to the gaseous effluent.

*Oak Ridge Gaseous Diffusion Plant

TABLE 1.0-2

CALCULATED FISSION PRODUCT AND TRANSURANIUM ISOTOPE[a] ANNUAL INPUTS AND EQUILIBRIUM SYSTEM[e] CONCENTRATIONS(2)

Isotope	Annual Input (Ci/year)	Equilibrium System burden (Ci)
Ru-106	9.3	13.5
Zr-95-Nb-95	2.0	0.5
Cs-137	0.16	$\frac{0.16\,(1-e^{-0.0266T})}{0.0266}$ [b]
Ce-144	0.16	0.17
Other fission products	0.16	0.7[c]
Tc-99 (β only)	70.0	70.0T[d]
Np-237	0.9	0.9T[d]
Transneptunium	0.5	0.5T[d]

[a]Based on fuel specifications of Table 1.0-1.

[b]Not an equilibrium condition since Cs-137 has a 26-year half-life and true equilibrium would only be approached in 130 years. Therefore, activity depends on time, T (years of operation).

[c]Assuming an average effective half-life of 3 years.

[d]Very long half-life, never reaches equilibrium.

[e]8.75 MSWU

5. Experience also indicates that other fission products and alpha radioactivity release fractions should be no more than one tenth of that for technetium. Measurements of gaseous and liquid effluents have failed to identify any other fission products. However release fractions of 1% to the liquid effluent and 0.1% to the gaseous effluent for other fission products will be used below to estimate environmental releases.

6. Cobaltous fluoride traps exhibit decontamination factors of 400 for neptunium and 10^5 for plutonium prior to feeding to the cascade or conversion facility. Releases for the system after trapping can then be proportioned to those exhibited for uranium in ORGDP release data. Thus, alpha release fractions will be 4×10^{-6} to the liquid and 2×10^{-7} to the gaseous effluents for neptunium and 1.6×10^{-8} to the liquid and 8.0×10^{-10} to the gaseous effluents for plutonium.

7. A large portion of the radioactivity entering a settling pond will be entrained in the sludge of the pond.

3.0 Estimated Radioactivity Releases

Releases to the environment can occur in three physical states (gas, liquid, and solid). The bulk of the radioactivity will be released as solids, either entrained on adsorbate or equipment removed from service for disposal. Liquid waste will be generated by rinsing (decontamination) of recycled equipment. The first rinse solution, which contains the bulk of the radioactivity, are saved to be used as the dilute acid wash solution. Subsequent rinses are sent to the primary holding pond.

Gaseous wastes can result from purge system venting, venting of evaporator overheads at the uranium recovery facility, and venting of decontamination hoods in the recycle facility. However, the exact breakdown for retention and release factors for each step is not known. One can only make assumptions based on experience with gaseous diffusion. The limited experience available was used to arrive at the following estimates (see Table 3.0-1) about gaseous, liquid, and solid discharges for non-uranium radioactivity (2).

TABLE 3.0-1

ASSUMED DISTRIBUTION OF FISSION PRODUCTS AND TRANSURANIUM ISOTOPES TO ATMOSPHERE, PRIMARY HOLDING POND, AND BURIAL GROUND

Isotope	Fraction released to atmosphere	Fraction released to primary holding pond	Fraction input to burial ground
Np-237	2×10^{-7}	4×10^{-6}	∿1.0
Other Transuranium	8×10^{-10}	1.6×10^{-8}	∿1.0
Tc-99	0.01	0.10	0.89
Fission Products	0.001	0.01	0.989

Primary enrichment plant sources of gaseous radioactive wastes are the product and waste purge systems. Uranium particulates are removed from these process streams by the high-efficiency-particulate absolute (HEPA) filter, which has an efficiency greater than 99.95%. Removal of gaseous uranium is achieved through the use of two chemical traps in the product and waste withdrawal systems, in series, between the cold trap and point of discharge into the air.

The first trap contains sodium fluoride that provides for the adsorption of uranium and certain fission or alpha emitting products. Through heating and proper valving, the trapped uranium may be desorbed and subsequently returned to the cascade. The second trap in the series contains alumina that is used for further removal of uranium prior to discharge of the gas stream to the atmosphere. This trap is nonreversible and uranium recovery is accomplished by leaching with nitric acid.

The fraction of the feed made up of reactor returns is passed through cobaltous fluoride traps prior to being fed into the cascade (2); the traps remove plutonium, neptunium, and a major fraction of the fission products. These products are removed from the gas stream by reduction with CoF_2 to the tetraflouride forms that, being particulates, are entrained within the traps.

Quantification of potential gaseous effluents is difficult because of uncertainties about the behavior of certain fission products in feed cylinders, traps, piping, and equipment. In attempting to analyze

possible releases to the environment, all assumptions, where necessary, have been made so as to overestimate the magnitude of the source term. Uranium and technetium releases were estimated by comparison with operating experience and extrapolated to higher operating levels. Fission product releases were based on current fission product specifications, with releases being assumed proportional to that of technetium, with the exception that a decontamination factor (DF) and/or retention factor 10 times that for technetium was assumed. This assumption is very conservative, since current experimental investigations indicate that the actual factor might be as high as 100 to 1000(2). Releases of the alpha emitters, neptunium and plutonium, were estimated by assuming an alpha specification of 1500 dis/min/(g of U) in reactor returns, with a neptunium DF of 400 and a plutonium DF of 10^5 through CoF_2 traps. Once fed into the cascade, neptunium and plutonium are assumed to be released to the environment in the same proportions as uranium.

The estimated constituents of an effluent under the above assumptions are listed in Table 3.0-2.

It may be concluded that recycled uranium which has been re-enriched will present no particular problem at the fabrication plant because most of the impurities of higher isotopes have been taken out in the enriching process, and could not make a significant contribution to an industry limit of 0.5 mCi/GW(e) for alpha-emitting transuranics of half-life greater than one year.

TABLE 3.0-2

ESTIMATED RADIOACTIVITY RELEASED TO THE ATMOSPHERE FROM AN ENRICHMENT PLANT[d]
(Transuranic alpha specification = 1,500 dis/min/g U)

Isotope	Radioactivity (Ci/year)/Gw(e)
U-232	2.75×10^{-8}
U-233	1.5×10^{-10}
U-234	3.25×10^{-5}
U-235	1.25×10^{-6}
U-236	0.92×10^{-6}
U-238	5.3×10^{-6}
Transneptunium[b]	3.3×10^{-13}
Np-237[c]	1.7×10^{-10}
Tc-99	4.5×10^{-4}
Ru-106	6.0×10^{-6}
Zr-95-Nb-95	1.25×10^{-6}
Cs-137	0.92×10^{-7}
Ce-144	0.92×10^{-7}
Other fission products	0.92×10^{-7}

[a]Relative to Tc-99, the retention of all fission products in equipment or traps is greater by a factor of 10.

[b]Cobaltous fluoride trap decontamination factor for Pu-239 = 10^5.

[c]Cobaltous fluoride trap decontamination factor for Np-237 = 400.

[d]8.75 MSWU Plant

If, however, recycled material goes directly from reprocessing to fabrication, cleanup systems will have to be designed and installed to collect the impurities as the material is converted from UF_6 to UO_2 for blending and/or pelletizing. These systems should have efficiencies and decontamination factors similar to those described above for the enrichment plant. They would, therefore, be expected to also reduce transuranium isotopes in the UO_2 to levels resulting in negligible releases compared to the proposed standard of 0.5 mCi/GW(e).

REFERENCES

(1) 32 FR 16289. (November 29, 1967).

(2) U.S. ENERGY RESEARCH AND DEVELOPMENT ADMINISTRATION. Environmental Statement - Expansion of U.S. Uranium Enrichment Capacity, DRAFT ERDA-1543 (June 1975).

II. NUCLEAR POWER REACTORS

An Analysis of Control Options for N-16 Offsite Skyshine Doses at Boiling Water Reactors

1.0 Introduction

The turbine system at a boiling water reactor (BWR) is a potentially significant source of radiation due to the presence of nitrogen-16, a relatively short-lived (t =7.14 sec), high energy (2.75 Mev (1%), 6.13 MeV (69%), and 7.11 MeV (4.9%) gamma emitter in the steam leaving the reactor. Nitrogen-16 is produced in the reactor core by neutron activation of oxygen in water, and, although short-lived, can be present in the turbine system in significant quantities due to the rapid transit of steam from the reactor vessel through the turbine system and to the condenser. The result is a flux of direct and scattered gammas which can result in high occupational exposure rates in and close to the turbine building, as well as potentially significant exposure rates to members of the public beyond site boundaries near the turbine building.

2.0 Sources

Detailed expositions of nitrogen-16 sources are presented in the safety analysis report for the General Electric standard boiling water reactor, the BWR/6 (1) and for operating BWR's in a comprehensive report recently released by General Electric (2). In these reports a nitrogen-16 activity concentration of 50 μCi/gm of steam at the reactor nozzles is assumed, based on experimental measurements of contact dose rates on cross-around pipe sections of operating BWRs. Other analyses (3,4) have assumed nitrogen-16 activities of up to 100 μCi/gm of steam at the nozzles; however, this is probably due to the desire for conservatism in the design of shielding.

In a typical modern boiling water reactor, steam flows directly from the reactor nozzles through the main steam header to the high pressure turbine (HPT). Steam extraction is also made from this flow path for steam to the steam jet air ejector (SJAE), feed water heaters (FWH), gland seal system, and the moisture separator/reheater units (MSRH). Steam leaving the HPT is routed through the shell side of the MSRH's, where it is dewatered and reheated for injection into the low pressure turbines (LPT). Steam extractions are also made at the HPT, MSHR's, and in several places along the LPT for the various feedwater heater stages (usually 6).

Typical delay times to and transit times through these components are shown in Table 2.0-1. At a concentration of 50 μCi/gm of steam, the nitrogen-16 source term at the nozzles is 100 Ci/sec. Thus, it is

obvious that the potential exists for considerable equilibrium activity to be present in these turbine system components.

Table 2.0-2 lists the calculated inventories for the various turbine building components. The dosimetric significance of these sources depends on the shielding (both exterior and self-shielding of components) as well as the geometry of the component layout. The typical order of the dose significance by component is (a) moisture separator/reheaters, b) intermediate piping, c) high pressure turbine, and d) all other components.

3.0 Turbine Building Configurations

The configuration in which components are placed in a turbine building has undergone several changes in recent years. Several different turbine manufacturers have supplied turbines for BWR reactor plants and component layout has varied as a function of both turbine manufacturer and of architect-engineer. Turbines have been supplied by General Electric, Westinghouse, and Kraftwerk-Union, for example, and facilities using BWR's have been engineered by a variety of architect-engineering firms. The major significant system design changes have been with respect to the placement of moisture separators and reheaters. Earlier BWR designs had vertically-oriented moisture separators and separate reheaters located on the mezzanine level of the turbine building (below the operating floor) as shown in Figure 3-1 (5). Considerable shielding was afforded by the concrete structure of the turbine building around these components, and, particularly above, by the operating floor.

For a variety of engineering reasons, including increased efficiency of turbine operation, reduction in building size, and reduction in time of construction, recent designs have incorporated horizontally-oriented combined moisture separators and reheaters located above the turbine building operating floor level, as shown in Figure 3-2. The high equilibrium nitrogen-16 activity levels in tube and shell side of these systems, combined with the relative lack of self-shielding, compared to that of the thick steel shells and massive internals of turbines, result in these "exposed" MSRH's and their

supply and return piping producing a potentially high gamma flux in comparison with all other components.

A system which can perhaps be considered an example of a "worst case" is the combination of a General Electric BWR with a Westinghouse turbine system. In this case the steam piping runs overhead from the top of the HPT to the top or side of the MSRH. Since there is considerable nitrogen-16 activity in these pipes, they can provide a significant additional source of gamma exposure beyond the MSRH's themselves.

4.0 Dose Assessment

The gamma flux existing at a point outside a turbine building due to sources of nitrogen-16 inside is difficult to calculate. Gammas may arrive at a given point by direct paths, by scattering in shielding and other components, or from air scattering, as shown in Figure 3-3. The shielding geometry is complicated due to the variety of component shapes and locations, and each component also has different self-shielding factors for the gammas involved.

A variety of types of computer codes have been developed to calculate the air-scattered contribution to the gamma exposure field (see, for example, refs. 2,6,7). The potentially most accurate of these are Monte Carlo transport codes. However, these models have not been verified by EPA, and they are sufficiently complex and expensive to prohibit performing such analyses on a case-by-case basis. No discussion of analytical techniques for quantitatively analyzing these exposure rates based on transport codes was undertaken, although the results of some calculations performed by industry (5) provide the basis for the present comparison of several options.

Insight into the relation between various shielding options and anticipated dose rates can be obtained, however, through an examination of existing shielding studies in conjunction with field measurement studies. This examination indicates the principal contributors to and magnitudes of potential doses and permits an informed, if not detailed, understanding of what might be required to reduce such doses.

5.0 Shielding of Components

Because of the high radiation field resulting from nitrogen-16 activity, existing turbine systems are already well-shielded. This is not primarily because of consideration of doses beyond site boundaries, but due to the need to comply with existing occupational exposure limits. In order to restrict the extent of high radiation areas adjacent to turbines and to allow more frequent or even uncontrolled access to other areas in the turbine building, the turbines and MSRH's are heavily shielded. Usually this shielding consists of a thick concrete "shadow shield" surrounding the turbine (as much as 4 ft thick), and upward extension of the turbine building lower side walls (up to 3 ft thick) to shadow-shield the MSRH's. While such shielding substantially reduces the direct components of the gamma flux, air-scattered contributions from gammas leaving the unshielded top of the turbines and MSRH's can still produce considerable exposure rates. Therefore, often as a design option, many recent designs have included concrete shields (up to 20" thick) over the MSRH's and vertical steel plating running between the turbines and MSRH's to reduce this air-scattered flux (see Figs. 5-1,5-2). In order to assess the effectiveness of such additional shielding as a means to reduce site boundary doses we have chosen to analyze a variety of such shielding options for the turbine building component configuration shown in Figure 5-1. The assumption is made that concrete walls are already in place around the MSRH/turbine area as shown to allow required access in the remainder of the turbine

building area within applicable limits for occupational exposure. These walls are assumed to consist of three feet of reinforced concrete; this thickness will provide an attenuation of approximately 99.7% of the incident gamma flux (neglecting buildup), leaving only the scattered flux as a potentially significant contributor to the off-site dose.

Such a characterization of skyshine as the principal source of exposure from nitrogen-16 at distances greater than a few hundred meters from the turbine building is supported by a recent field study performed at the Cooper Nuclear Station by EPA and ERDA (8). Cooper station is a BWR with a Westinghouse turbine and horizontally-oriented moisture separators located on the turbine building operating floor. Field measurements were made by EPA in February, 1975, and by ERDA's Health and Safety Laboratory in April, 1975. Cooper is a reasonable example of the "base" case turbine building discussed above, since shielding consists of side walls only, although in this case these consist of 3 ft of high density concrete. A significant finding of the study was that nearly 100% of the dose measured was due to air-scattered (skyshine) gammas. The contribution to dose of the direct flux was negligible.

Referring to Table 5.0-1, it can be seen that for the base case the total net equivalent activity above the turbine operating floor is 34 Ci. Out of this total, 21 Ci are associated with the moisture separator/reheater and 10.3 Ci are associated with the intermediate piping.

The shielding options considered, calculated doses, and anticipated costs are presented in Table 5.0-2. These have been derived in part from information provided the Agency by General Electric (5). With these options and their associated dose rates as a basis, and using Means 1975 Building Construction Cost Data (9), we have made independent cost estimates for installing the additional shielding required by each of the options considered. The costs presented do not include any additional basic building structure which might be required within the turbine building to support the additional weight of the shielding, because for most of the cases considered the additional weight involved does not appear to require any additional support beyond that already available in the basic structure supporting the turbine and other components. The costs presented here are appropriate to plants in the design stage, and would not necessarily apply to retrofit situations.

All cases above the base case include the cost of poured-in-place reinforced concrete, which is supported by an assembly of steel girders bridging the MSRH's between the exterior turbine shielding wall and inside panel wall. The inside panel includes steel columns to provide additional support for the overhead assembly. The dimensions required for each of two overhead shields are conservatively estimated to be 140' long by 35' wide. The inside panel walls are assumed to be 140' long by 25' high. The concrete for exterior side walls and end walls is assumed to be already present as the "base case." Costs of materials, installation, engineering,

financing, overhead, and profit, were based on standard estimating assumptions (10). Details of the estimation procedure used are available upon request. Table 5.0-2 provides a summary of costs for the various shield options, and Figure 5-3 displays annual dose at 500 meters vs. cost of shielding.

Doses are presented for the various shielding options both as calculated by the industry and as projected from values measured in the field. The data provided by General Electric was calculated using a source term of 100 Ci/gm and has therefore been divided by two to be consistent with the currently accepted source term of 50 μCi/gm. In addition, the assumption of 100% occupancy, no additional shielding by offsite building structures, and annual operation at 100% power are considered to be unreasonably conservative assumptions for estimating real doses to individuals at real sites. It is concluded, therefore, that it should be readily possible to restrict the dose from nitrogen-16 skyshine to a real individual located at reasonable distances from the center of the turbine building for realistic occupancy times to less than 2 mrem/yr. These dose levels should be attainable for no more than approximately $250,000 and even these costs should be incurred only in those few instances where actual site boundaries are so close to turbine buildings as to create the possibility of significant offsite exposures from nitrogen-16 sources.

Table 2.0-1

N^{16} CHARACTERISTICS OF A STANDARD BWR TURBINE SYSTEM[5]

Component	Decay Time at Inlet (seconds)	Estimated Mass Inventory (lbs)	Mass Flowrate (lb/hr x 10^{-6})	Component Transit Time (seconds)
Main Steam Line and Header System				
a. Reactor Nozzle to Main Steam Header	0.00	8.933×10^{3}	15.396	.2.09
b. Main Stream Header to HPT	2.09	4.464×10^{3}	14.764	1.09
		13.397×10^{3}		
High Pressure Turbine	3.18	3.784×10^{2}	14.748	0.0924
Low Pressure Turbines	5.86	7.611×10^{2}	10.678	0.257
Moisture Separator Shell-Side (Steam)				
a. Inlet to Vanes	4.29	1.256×10^{3}	13.171	0.343
b. Vanes	4.64	3.00×10^{2}	11.460	0.0942
c. Vanes to Outlet	4.73	2.119×10^{3}	10.904	0.700
		3.675×10^{3}		
Moisture Separator Shell-Side (Liquid) (Vanes, Drain Trough)	4.64	4.059×10^{3}	1.712	8.54

Table 2.0-1 (Continued)

Component	Decay Time at Inlet (seconds)	Estimated Mass Inventory (lbs)	Mass Flowrate (lb/hr x 10^{-6})	Component Transit Time (seconds)
Moisture Separator Drain System				
a. Steam	4.73		0.5554	
b. Liquid	13.18		1.712	
First Stage Reheat System				
a. Supply Pipe - HPT to Tube Inlet	3.27	2.058×10^2	0.7011	1.06
b. Tubes	4.33	6.424×10^3	0.7011	33.0
		6.630×10^3		
Second Stage Reheat System				
a. Supply Pipe-Main Header to Tube Inlet	2.09	2.80×10^2	0.6145	1.64
b. Tubes	3.73	5.811×10^3	0.6145	34.0
		6.091×10^3		
First Stage Reheat Drain System	37.3		0.7011	
Second Stage Reheat Drain System	37.8		0.6145	

Table 2.0-1 (Continued)

Component	Decay Time at Inlet (seconds)	Estimated Mass Inventory (lbs)	Mass Flowrate (lb/hr x 10^{-6})	Component Transit Time (seconds)
Piping System - HPT to MS/RHR	3.27	3.717×10^3	13.171	1.02
Piping System - MS/RHR to LPT				
a. MS/RHR to CIV	5.43	6.857×10^2	10.904	0.227
b. CIV	5.66	2.852×10^2	10.678	0.0962
c. CIV to LPT	5.75	2.812×10^2	10.678	0.0948
		1.252×10^3		
First Stage FWH and Extraction System				
a. Extraction Point 4	6.12		0.1016	
b. Extraction Point 5	6.12		0.6017	
Second Stage FWH and Extraction System	6.12		0.6301	
Third Stage FWH and Extraction System	6.12		0.7344	
Fourth Stage FWH and Extraction System	6.12		0.4016	
Fifth Stage FWH and Extraction System (Excluding MS Drain System)	3.18		0.0126	

Table 2.0-1 (Continued)

Component	Decay Time at Inlet (seconds)	Estimated Mass Inventory (lbs)	Mass Flowrate (lb/hr x 10^{-6})	Component Transit Time (seconds)
Sixth Stage FWH and Extraction System (Excluding Reheater Drain Systems)	3.27		0.857	
Condenser (Excluding return from FW Turbine)	6.12		8.207 0.0016	~30 (liquid) ~ 1 (gas)
Hotwell (Excluding return from FW Heaters, etc.)	~36		8.207	
SJAE First Stage System				
a. Off-Gas	~7		0.0016	
b. Driving Steam Supply Line	2.09	1.12×10^{1}	0.0180	2.24
c. First Stage Driving Steam	4.33		0.0080	
Recombiner System (Second Stage Air Ejector Driving Steam)	4.33		0.0100	
Gland Seal System				
a. From HPT	3.27		0.0186	
b. From Valve Stem	3.18		0.0029	
Feedwater Turbine System	5.66		0.2259	

Table 2.0-2

N^{16} Inventories For A Standard BWR Turbine System[5]

Component	N-16 Inventory (Curies)
Main Steam Line and Header System	263
High Pressure Turbine	6.3
Low Pressure Turbines (1)	9.8
Moisture Separator and Reheater Shell-side Steam	53
Moisture Separator Shell-side Liquid	41
Moisture Separator Drain System	56
First Stage Reheat System (2)	33
Second Stage Reheat System (2)	32
First Stage Reheat Drain System (3)	1.4
Second Stage Reheat Drain System (3)	1.1
Intermediate Piping System - HPT to MS/RH	59
Intermediate Piping System - MS/RH to LPT	17
First Stage - FWH & Extraction System (4)	26
Second Stage - FWH & Extraction System (4)	23
Third Stage - FWH & Extraction System (4)	27
Fourth Stage - FWH & Extraction System (4)	15
Fifth Stage - FWH & Extraction System (Excluding Moisture Separator Drain System Activity Listed Above).	.6
Sixth Stage - FWH & Extraction System (Excluding First and Second Stage Reheat Drain System Activities Listed Above)	42

Table 2.0-2 (Continued)

Component	N-16 Inventory (Curies)
Condenser (Excluding Residual Activity Returned from Feedwater Turbine).	287
Hotwell (Excluding Residual Activity Returned from Feedwater Heaters and Gland Seal System)	18
SJAE First Stage System (5)	.6
SJAE Off-gas System	.4
Gland Seal System (6)	1.0
F.W. Turbine System (6)	8.8
Total	1022.0

Notes

(1) 6-Flow Machine.

(2) Includes inventory in liquid and steam in reheat tubes and in steam supply line.

(3) Includes total inventory beyond reheater outlet.

(4) Includes total inventory beyound extraction point. Distribution of this will depend on equipment arrangement and sizing.

(5) Includes inventory in steam supply line.

(6) Includes total inventory beyond inlet at steam supply line.

Table 5.0-1

Turbine equipment typical total and net ^{16}N inventories (Ci) for a 1200 MWe plant.

COMPONENT	TOTAL	ABOVE OPERATING FLOOR	
		GROSS	NET EQUIVALENT
Main Steam Lines	260	5	1.6
HP Turbine	6	6	0.3
HPT to MS/R Piping	60	2	1.3
MS/R	220	150	21
MS/R to LPT Piping	17	17	9
LP Turbines	10	10	0.5
FW Heaters & Extraction	130	—	—
Condenser	290	—	—
Hotwell	18	—	—
SJAE & Gland Seal	2	—	—
FW Turbine	9	—	—
	1022	190	34

Table 5.0-2 Summary of Shielding Cost Estimates

Shield Design				Estimated Dose at 500 Meters (mrem/yr), Based on Calculational Models		Estimated Cost of Shielding (k$)		
Outside Wall	Inside Panel	MSRH Cover	Turbine Cover	100% Occupancy & Capacity	50% Occupancy, 100% Capacity	Industry (5)	EPA Min.	EPA Max.
TURBINE PERPENDICULAR TO BOUNDARY								
3'	-	-	-	16.5	6.5	'base'	'base'	'base'
3'	6"	3"	-	6.5	2.6	720	96	136
3'	6"	6"	-	4.4	1.7	745	122	169
3'	1'	1'	-	2.9	1.2	890	205	271
3'	1'	1'	6"	1.5	0.6	915	258	347
TURBINE PARALLEL TO BOUNDARY								
3'	-	-	-	18.5	7.5	'base'	'base'	'base'
3'	6"	6"	-	8.0	3.2	745	122	169
3¼'	1'	1'	-	4.3	1.7	895	224	292
3½'	2'	1'	-	2.9	1.2	990	295	369
3¾'	2¼'	2'	6"	1.4	0.5	1,250	492	623

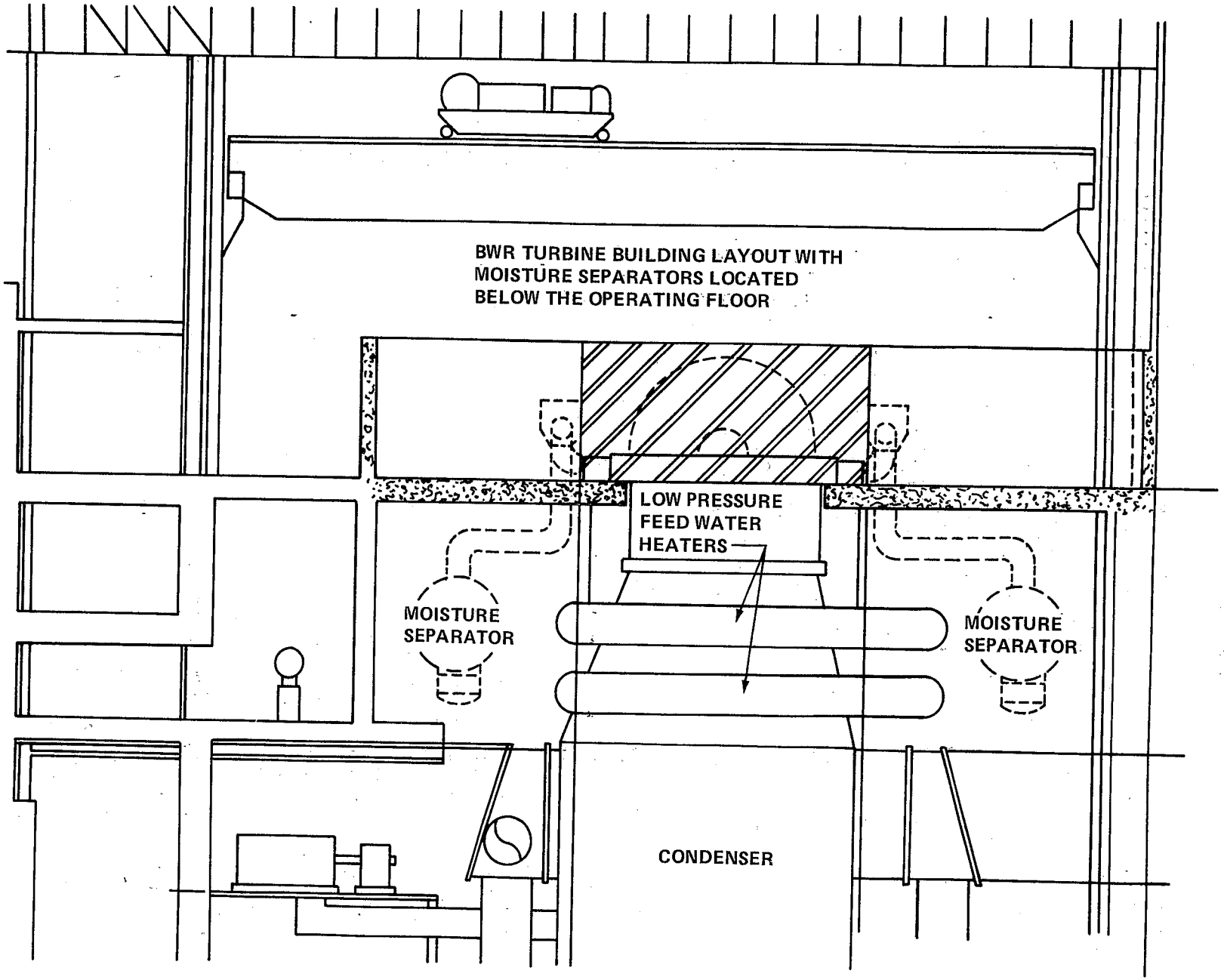

FIGURE 3-1. TYPICAL COMPONENT LAYOUT IN EARLY BWR TURBINE BUILDING DESIGNS. (5)

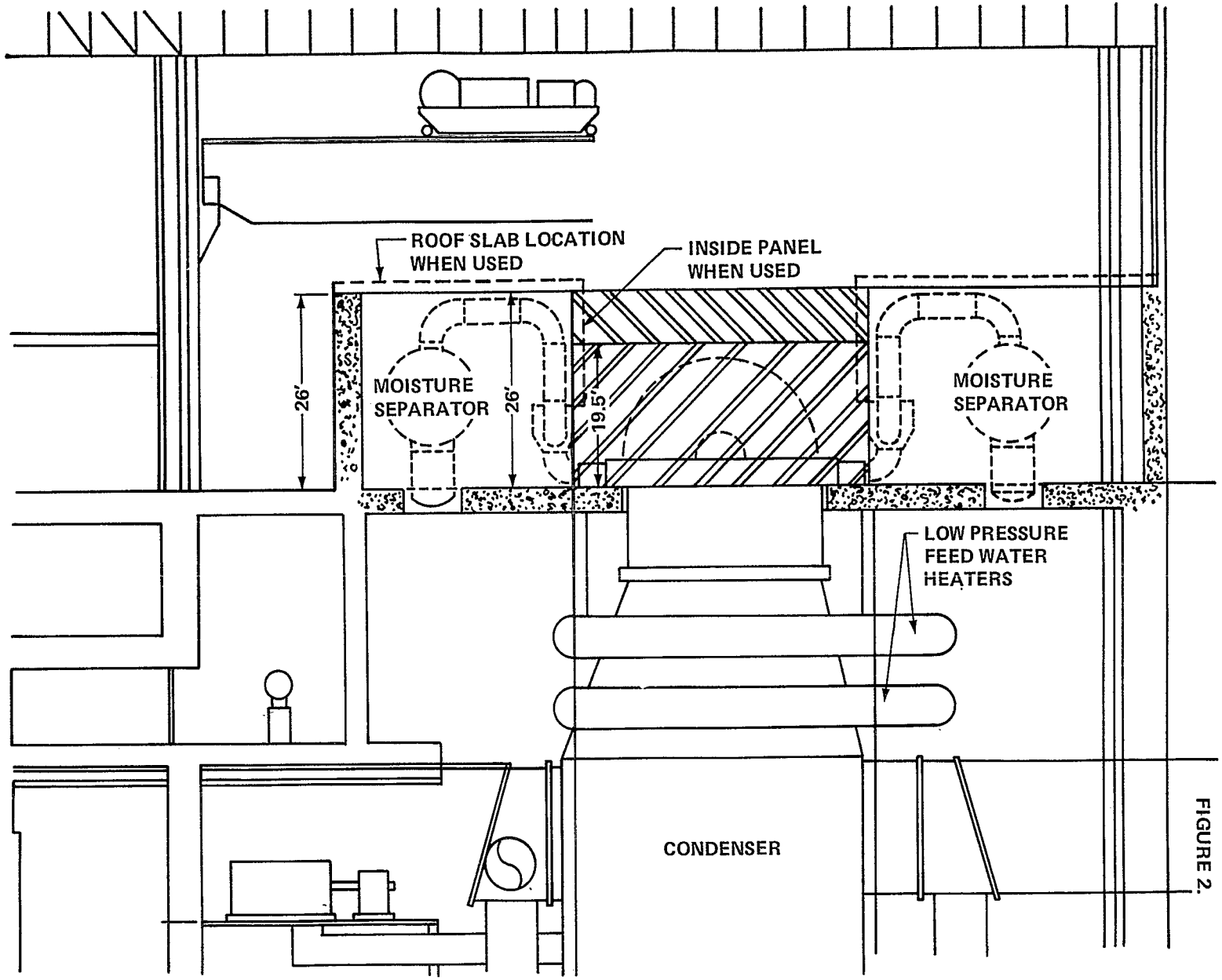

FIGURE 3-2. TYPICAL COMPONENT LAYOUT IN CURRENT BWR TURBINE BUILDING DESIGNS.[5]

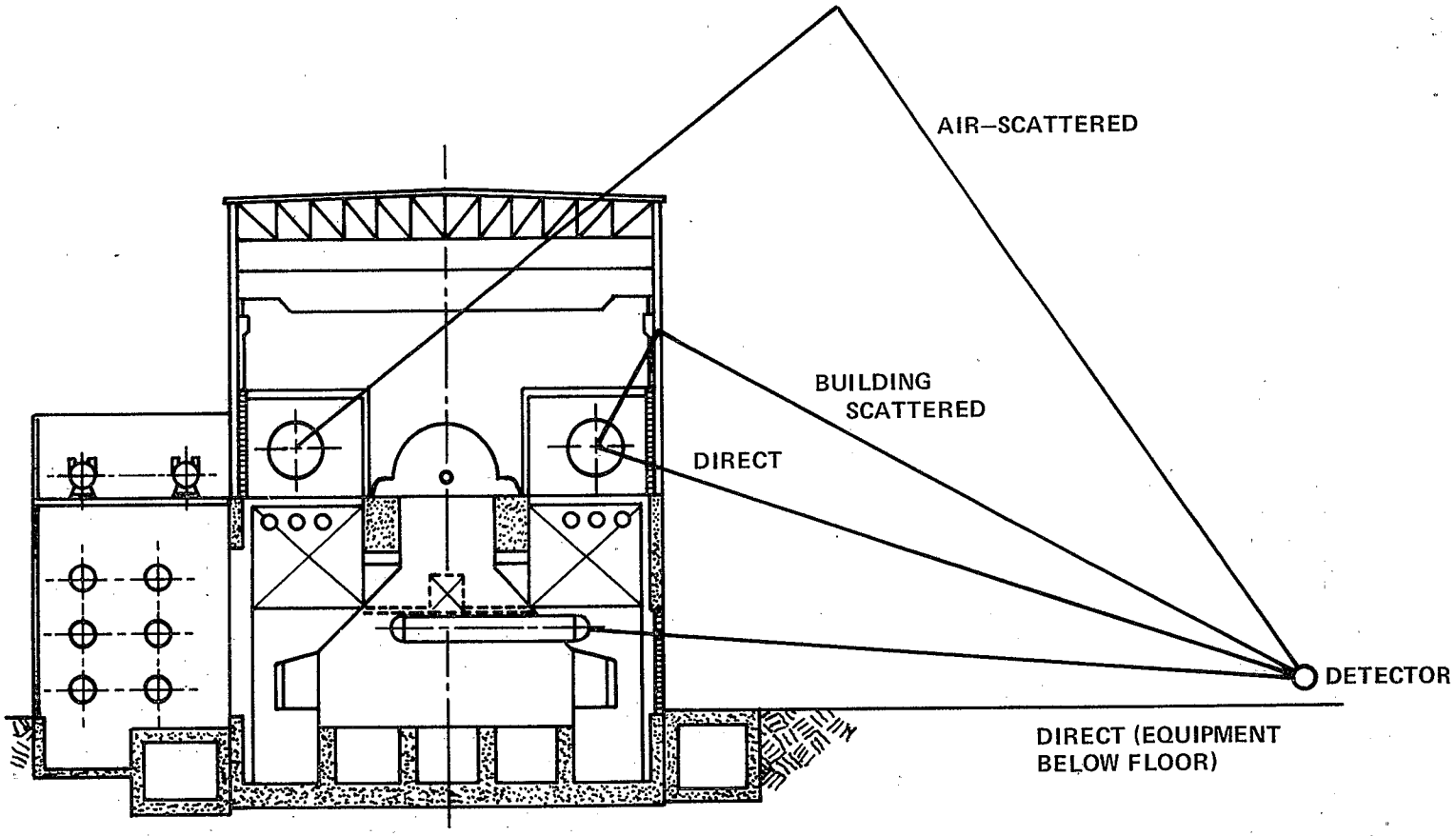

FIGURE 3-3. CONTRIBUTIONS TO DOSE RATE FROM N–16 IN TURBINE BUILDING COMPONENTS.

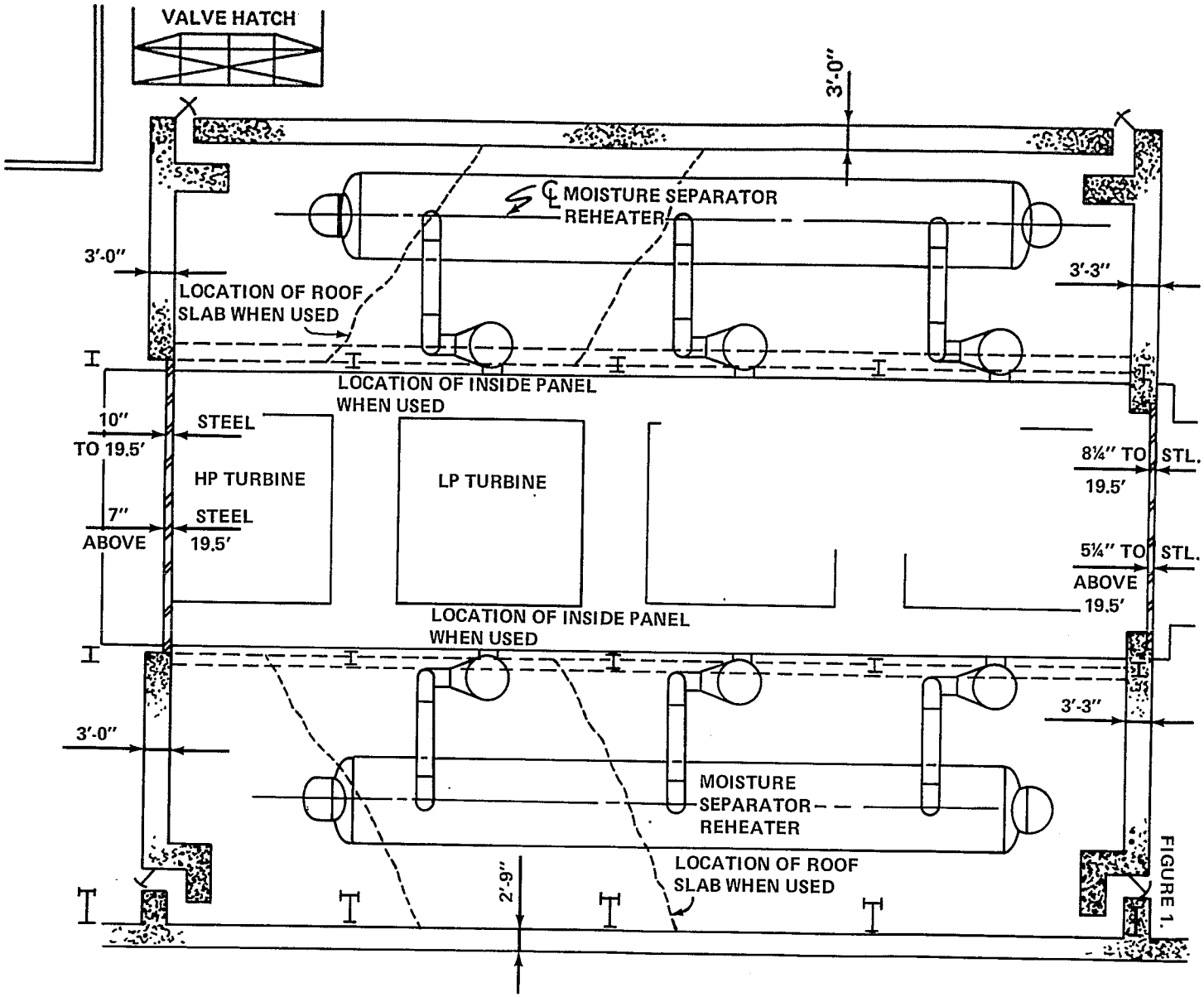

FIGURE 5-1. TOP VIEW OF TURBINE COMPONENT LAYOUT SHOWING TYPICAL "ACCESS" SHIELD DESIGN ALONG WITH VARIOUS SHIELD OPTION. (5)

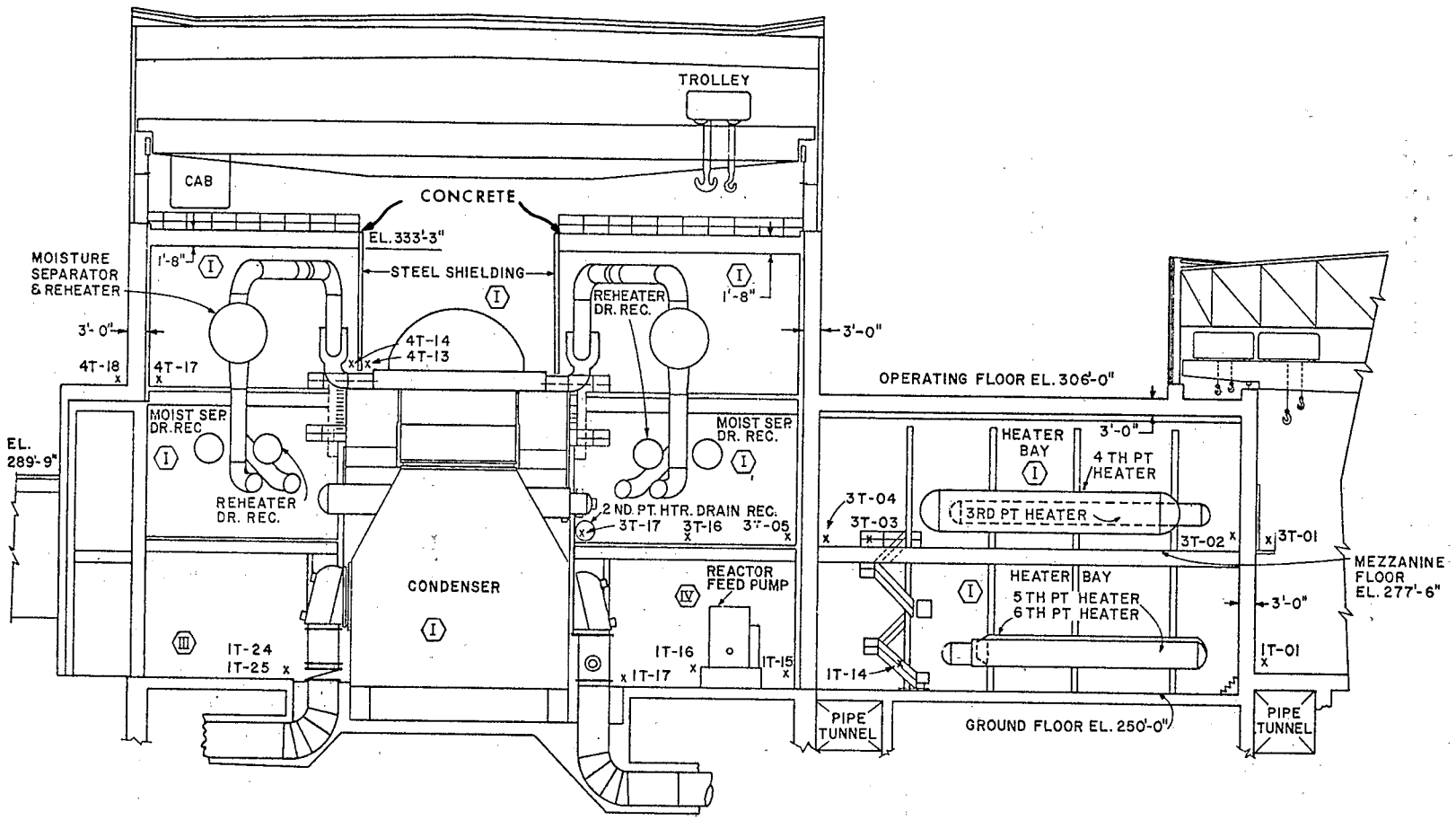

FIGURE 5-2. Transverse sectional view of Nine Mile Point 2 nuclear plant turbine building, showing shielding of moisture separators and turbines.(3)

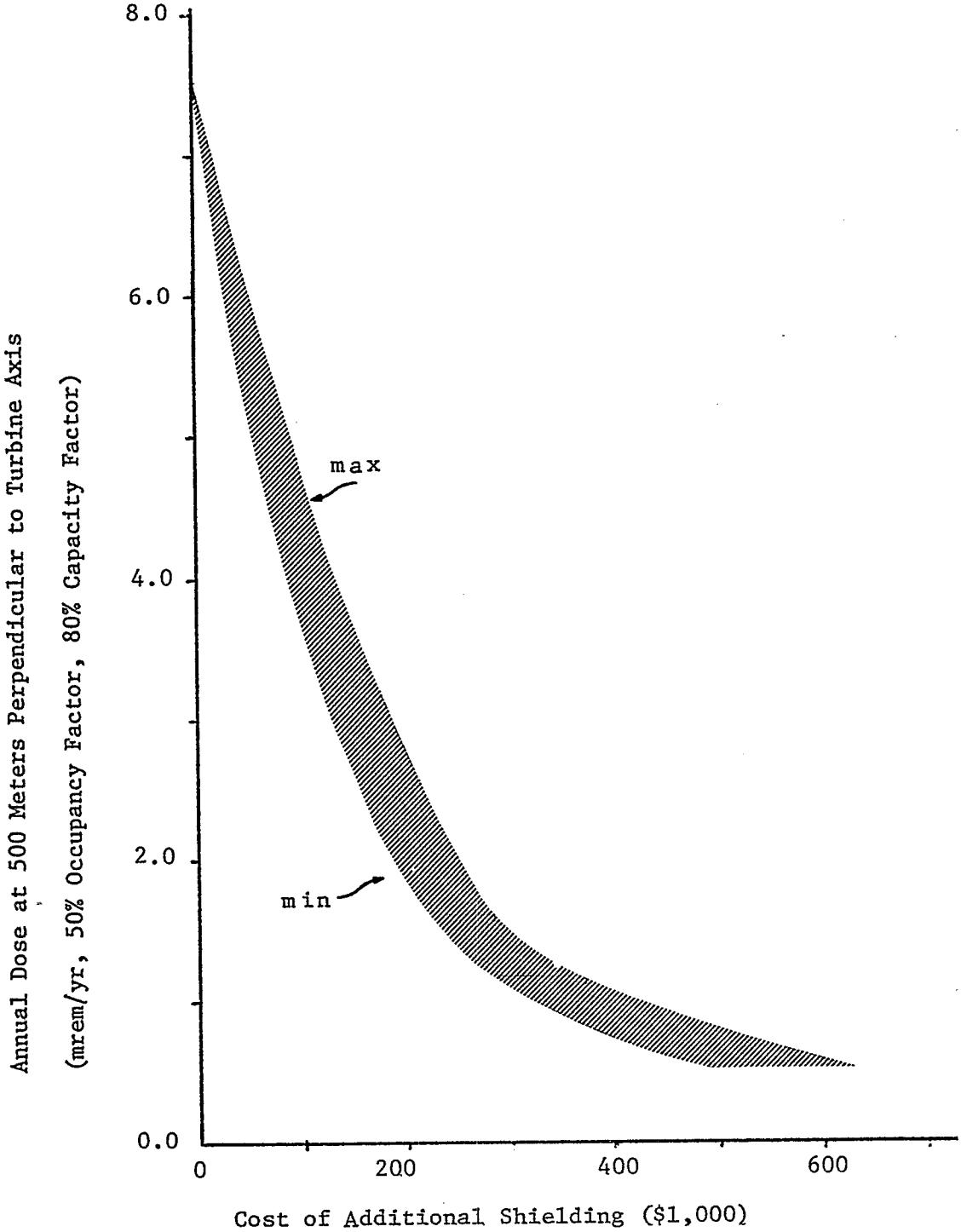

FIGURE 5-3. ANNUAL DOSE AT 500 METERS VS. COST OF SHIELDING

REFERENCES

(1) GENERAL ELECTRIC COMPANY. BWR/6 Standard Safety Analysis Report, NEDO 10741.

(2) ROGERS, D.R. BWR Turbine Equipment Nitrogen-16 Radiation Shielding Studies, General Electric Report NEDO-20206 (December 1973).

(3) STONE AND WEBSTER ENGINEERING COMPANY. Radiation Shielding Design and Analysis Report - Nine Mile Point Nuclear Station Unit 2, RP-6 (January 1974).

(4) PUBLIC SERVICE ELECTRIC AND GAS COMPANY OF NEW JERSEY. Newbold Island Nuclear Station Preliminary Safety Analysis Report (February 1970).

(5) Information provided EPA by General Electric and Bechtel Engineering Staff (January 1975).

(6) WOOLSEN, W.A., A.E. Profio, D.L. Huffman. Calculation of the Dose at Site Boundaries from Nitrogen-16 Radiation in Plant Components, JRB 72-507 LJ, JRB Associates (December 1972).

(7) WARD, J.T., Jr. A Dose Rate Kernel for Air-Scattered Nitrogen-16 Decay Gamma Rays, Ph.D. Thesis, University of California, Berkley, California.

(8) PHILLIPS, C., W. Lowder, C. Nelson, S. Windham, and J. Partridge. Nitrogen-16 Skyshine Survey at a 2400 MW(t) Power Plant, EPA-520/5-75-018 (December 1975).

(9) GODFREY, R.G., Editor. Building Construction Cost Data 1975, 33rd Ed., Robert Snow Means Company, Inc. (1974).

(10) The following markups were applied to materials and installations: 25% overhead and profit, 2.5% engineering, 10% contingency. A short term financing factor of 1.375 was then applied to the total, representing a 10% per annum financing cost over a period of three years.

III. NUCLEAR FUEL REPROCESSING

A. Control of Iodine Discharges From Nuclear Fuel Reprocessing Facilities

1.0 Introduction

Iodine-129 in spent fuel has been recognized as a potentially significant environmental contaminant, and efforts have been made in the past to control the discharge of this species of radioactive iodine. These efforts were only partially successful, however, and it has become increasingly apparent that improved control of long-lived radioiodine discharges from fuel reprocessing facilities is necessary (1,2). Current estimates of the costs and control efficiencies of a variety of improved control systems for iodine-129 and iodine-131 are reviewed below. The benefits to be gained by reducing the environmental dose commitments associated with releases of iodine-129 through installation of such systems are then set forth. Finally, the level of cost-effectiveness of each of the control options is determined.

2.0 Source Terms for Iodine

The quantities of iodine-129 and iodine-131 present in spent uranium fuel have been previously reported, based on calculations using the computer code ORIGEN (3). These values, expressed in curies per metric ton of heavy metal in the fuel, are:

I-129:	0.04 Ci/MTHM
I-131:	0.9 Ci/MTHM

for the following fuel parameters, used in this report:

Burnup = 33,000 MWd/MTHM

Average Specific Power = 30 MW/MTHM

Cooling Time = 160 days.

It is assumed that a light-water-cooled power reactor operates at 33% thermal efficiency, producing approximately 33 MTHM of spent fuel with this burnup for each gigawatt-year of electric power [GW(e)-yr], and that a typical fuel reprocessing plant has a throughput capacity of 1500 MTHM per year. Such a plant would be capable of processing the spent fuel from about 45 such reactors each year.

If no iodine control systems were installed at a 1500 MT plant, the number of curies discharged annually would be:

I-129:	60 Ci
I-131:	1,400 Ci

It is assumed that these contaminants are discharged to the atmosphere, rather than into liquid pathways, since currently projected plants use complete recycle of process liquids and thus no liquid discharges are planned.

Although the source term for I-131 could theoretically approach 1400 Ci per year, it is highly unlikely that such quantities will be available for discharge in actual operations because of its relatively short half-life (8.08 days). Even if all spent fuel was processed at 160 days cooling time, any delay of iodine-131 in the various inplant processes or off-gas streams would permit additional decay and reduce the quantity available for discharge. Other factors that would reduce the quantity of iodine-131 available for discharge include: a) the existing large backlog of spent fuel, which indicates there is no need, at least in the foreseeable future, to process fuel that has been cooled for only 160 days, b) cooling requirements for spent fuel shipping casks may be such that the fuel cannot be loaded for shipping from the reactor to the reprocessor until it has cooled for periods greater than 160 days, and c) for those reprocessing plants using in-line solidification of high level waste, cooling periods in the range of a few years may be required to permit sufficient decay of radioactive ruthenium. Thus, it is considered highly unlikely that the I-131 source term at a fuel reprocessing plant will approach the theoretical maximum value.

3.0 Control Technologies for Iodine at Reprocessing Plants

The control of iodine at reprocessing plants is a significant technical challenge. During the last few years a number of promising systems for control of iodine in gaseous waste streams have been investigated and most are now in various stages of final demonstration for commercial use. The principal remaining problem, as pointed out in the previous EPA report concerning fuel reprocessing (1), is that, until recently, inadequate attention has been given to the control of iodine in low-level liquid waste streams. Any iodine present in these liquid streams, whether from off-gas scrubber solutions or from other sources, can potentially be discharged to the environment because of its high volatility. Evaporative processes are used to reduce the volume of these low-level liquid wastes and to provide for discharge of tritium to the atmosphere. Such processes will, of course, also drive off any iodine present for subsequent discharge to the atmosphere, and systems developed for removal of iodine from gaseous streams are not, in general, applicable to evaporator discharges because of their high water content.

A simplified schematic of waste streams appropriate to the discussion of iodine control systems for current designs of reprocessing plants is shown in Figure 3-1. Most of the iodine present in spent fuel is released to the off-gas system during the fuel dissolution and initial processing steps. The fraction released to the off-gas has been estimated at no less than 90% (5). The balance is collected in liquid waste streams. The off-gas system for

a specific plant will not necessarily be designed just as shown in the schematic, since the detailed design can vary due to the order in which contaminants are removed. For example, it may be advantageous to remove the oxides of nitrogen from the dissolver off-gas stream before dilution by process off-gas inputs.

The chemical form or species is an important characteristic of the iodine when considering cleaning efficiencies, environmental transport, and iodine dosimetry. In general, it is believed that iodine evolved during the dissolution process will be in the elemental form (7). However, any iodine discharged to the off-gas system during or following the separation processes is considered likely to have a large organic component (8). The relative fractions of iodine evolved from the dissolution process step and from the various subsequent separation processes is not known, nor is the organic component of either fraction (5). Estimates of these fractions vary widely (5,9) and these differences will probably not be resolved until studies are conducted during actual operations of a large facility (9). For the purposes of this analysis it is assumed that 90% of iodine is discharged to the off-gas system, with the balance going to liquid waste streams (5). The fraction of the iodine discharged to the atmosphere following all control systems is assumed to be about 50% organic and 50% elemental. Factors contributing to an expectation of a significant organic component of the final discharges are: a) iodine from the low-level liquid pathway has passed through organic processing steps and thus can be expected to have a significant

organic component, b) iodine in the off-gas stream is expected to contain a significant organic contribution from separation processes, and c) most iodine cleaning systems are more efficient in removing elemental than organic iodine, and thus selectively allow passage of organic iodides.

Table 3.0-1 summarizes iodine control system capabilities and costs. The iodine control system DF's assumed are, for the most part, those used in a recent study of effluent controls for fuel reprocessing by ORNL (4). The difference in control efficiencies for I-129 and I-131 shown in Table 3.0-1 for Ag-Z and macroreticular resins are due primarily to the differences in half-lives of these radionuclides, as discussed in detail by Davis (6). This difference is to be expected in any system which relies upon delay as part or all of its operating principal. Thus, it is essential to both isolate and contain long-lived radionuclides to insure that they will not eventually re-enter a discharge stream. A brief description of each of the radioiodine control systems is given in the following sections.

3.1 Caustic Scrubbers

Caustic scrubbers are widely used in the chemical industry to remove contaminants from off-gas streams (10). They have been used in the nuclear industry to control both ruthenium and iodine (11). Tests have indicated that DF's of 100 and greater for elemental iodine are attained (11), but DF's are less for organic iodine species. The fraction of organic iodine in the primary off-gas stream is not known, but is predicted to be low (5). It has been assumed that the organic

fraction is less than 10% and that caustic scrubbers will, therefore, operate routinely with a removal efficiency of no less than 90%. Capital cost estimates for a caustic scrubber are abstracted from the ORNL work (4).

3.2 Mercuric Nitrate Scrubbers

Mercuric nitrate-nitric acid scrubbers have been used at the AEC (now ERDA) reprocessing facilities at Idaho Falls to control the discharge of iodine. While this type of scrubber removes both elemental iodine and organic iodides, tests have indicated that it is also more efficient in removing iodine in the elemental form (12). Based on the predicted relative fractions of organic iodides present (5), it is assumed to remove about 90% of all iodine from the off-gas stream (12,13). Costs for mercuric nitrate scrubbers are expected to be similar to those for caustic scrubbers (1,20).

3.3 Silver Zeolite Adsorbers

Silver zeolite adsorbers have not been used to treat reprocessing plant off-gas, but are scheduled to be installed in future plants. Most of the development work for this system was conducted at the Idaho National Engineering Laboratories (14). Silver nitrate is impregnated into an alumina-silica matrix and the resulting material is arranged in a relatively deep bed, since a longer residence time of the iodine in the adsorber appears to enhance its efficiency. High removal efficiencies have been observed for all chemical species of iodine using this process (14). Although considerably higher values are reported for small-scale systems, ORNL assigned a DF of 10 for

I-129 and a DF of 100 for I-131 for a silver zeolite adsorber, pending the development of additional data for plant-scale usage (15,16), and these conservative values have been assumed here. The costs are subject to some uncertainty related to the loading rate of the system and thus the quantities of silver required (1,20).

3.4 Macroreticular Resins

Adsorption of iodine from both neutral and slightly acidic solutions on macroreticular resins has been shown to be about 99% efficient in laboratory studies (17). However, performance of this system has not been demonstrated in commercial-scale practice and, until proven under operating conditions, a conservative DF of 10 for I-129 and a DF of 100 for I-131 are assigned. Costs for this system are estimated to be small (20).

3.5 Suppression in Evaporator by Mercuric Nitrate

Mercuric nitrate, when added to liquid evaporators, will suppress the evolution of iodine into the overheads. The Barnwell Facility includes provision (18) for this method of iodine emissions control from liquid waste streams. Yarbro has estimated a DF of 2 to 10 across the waste evaporators, including the final vaporizers, for this addition (5). A conservative value of 2 is assumed for this analysis. Costs are estimated to be similar to those for a macroreticular resin system.

3.6 Advanced Systems

Figure 3-2 displays a simplified schematic of an advanced iodine control system. The basic principle of this system is to force essentially all of the iodine into the off-gas system so as to avoid the difficulty of removing iodine from liquid streams, and then to use highly efficient systems to remove and retain iodine from the off-gas. In the schematic this objective is achieved by using an iodine evolution process at the dissolver to drive the iodine into the off-gas, and the iodox system to efficiently remove the iodine from the off-gas. The voloxidation step is primarily used for tritium control. However, a significant fraction of both the iodine and krypton present in the spent fuel will also be driven off by this process. After tritium has been removed from the voloxidation off-gas, this stream is routed to the dissolver off-gas stream for subsequent krypton and iodine removal.

The iodox process itself effectively scrubs both elemental and organic iodine from off-gas streams with concentrated ($\sim$20M) nitric acid (7,19). Laboratory-scale studies have indicated that DF's in excess of 10,000 for methyl iodine have been obtained in multi-staged bubble-cap columns (8). The efficiency with which iodine is scrubbed from off-gas streams with nitric acid is dependent on the oxidizing power of the concentrated nitric acid, which converts the volatile iodine species to the nonvolatile HI_3O_8 form. The capital cost estimates in Table 3.0-1 are abstracted from the ORNL work (4); there is no provision made at this time for the additional cost of a

fractionation system to permit recovery of the acid at low concentrations for recycle to the dissolver and iodox systems.

The voloxidation process effectively removes such volatile fission products as iodine and krypton from sheared fuel, by heating the fuel to about 550 °C in air or oxygen to release these fission products by thermal evolution or by oxidation (21). The process equipment would consist of: a) a rotary kiln to oxidize the fuel, b) a recombiner to form tritiated water, and c) a drier to collect the water and separate it from iodine and krypton which then flow to the iodox equipment (20). Laboratory-scale tests with highly-irradiated sheared fuel show that up to 75% of the iodine and 45% of the krypton are volatilized. The costs shown are based on the ORNL work (4).

ORNL is currently conducting development work on these advanced systems. Capital cost estimates and projected DF's are abstracted from their recent summary. ORNL has projected that these systems will be demonstrated and available for installation in new reprocessing plants by about 1983, assuming that an orderly program of engineering development, construction, and demonstration is pursued (4).

4.0 Cost Evaluations

Estimated capital costs and annual operating costs for the various iodine control systems described are listed in Table 3.0-1. The Agency's capital cost estimates for iodine control are based on work at ORNL (4) and recently released actual cost figures for mercuric nitrate scrubbers and silver zeolite beds at the Barnwell plant (20). Both of these analyses considered iodine control as applied to a 1500 MTHM per year fuel reprocessing plant similar to the Barnwell plant in design features. Therefore, the Agency feels that costs from the Barnwell experience are more appropriate for use in determining the cost-effectiveness of iodine control systems. In general operating costs have been estimated since no operating experience is available. Storage costs and disposal costs have been neglected in the analysis since meaningful data cannot be developed until a determination is made on the final disposition of fuel cycle waste. However, since the additional iodine-129 waste that the proposed standard will require be collected is very small compared to that which will be collected under current practices, the incremental cost of storage and disposal are expected to be insignificant.

5.0 Doses and Potential Health Impact Attributable to Iodine Discharges from Fuel Reprocessing

Partial cumulative environmental dose commitments to the thyroid and estimated potential health effects attributable to discharges of iodine-129 from a model 1500 MTHM/yr plant were calculated using the specific activity method (1), and are presented in Table 5.0-1. These values represent a partial assessment of the total potential dose and health impact of iodine-129 in that the period of assessment following release of this extremely long-lived material (17 million years half-life) is limited to 100 years. Dose commitments were cumulated for releases over an assumed control equipment lifetime of 20 years commencing in 1983. These partial cumulative environmental dose commitments and their associated health impacts are shown for representative values of overall plant decontamination factors obtainable using the control methods described above. The dose-effect assumptions used were derived from more recent values (22,24) than those used in the original analysis (1); a population age weighted value of 60 thyroid cancers per million rems to thyroid was used.

Health effects may also result from exposure of local populations immediately following release of both iodine-131 and iodine-129, in addition to the long-term effects described above. Using methods described previously (1) and short term pathway parameters noted below, it is estimated that uncontrolled release of 1400 Ci/yr of I-131 could result in 35 health effects and the release of 60 Ci/yr of iodine-129 could result in 30 health effects over a 20-year period of plant operation commencing in 1983. These values should be added to

those listed in Table 5.0-1 to obtain a complete estimate of potential health effects attributable to the uncontrolled release of radioactive iodines for the first 100 years following release.

In addition to the population doses and impacts calculated above, maximum potential thyroid doses to individuals may also be significant. Tables 5.0-2 and 5.0-3 list calculated maximum individual thyroid doses from iodine-129 and iodine-131 discharges for a variety of age groups and release fractions. The values for iodine-131 were calculated using dose conversion factors previously described (23). Dose conversion factors for iodine-129 were based upon those used for iodine-131, corrected for differences in pathway and dosimetry dependent upon half-life and effective energy of decay products (1). It is assumed that 50% of the iodine released is in elemental form and 50% is in organic form, and that X/Q is equal to 5×10^{-8} sec/m^3. Although specific sites could vary significantly from this assumption, it is expected that site selection criteria for fuel reprocessing facilities will reflect particular attention to minimization of the possibility of dose to the thyroid of nearby individuals.

6.0 Cost-effectiveness Considerations

Analysis of the options available for control of iodine is complicated by a) the multitude of alternatives available, and b) the variability of the current stage of development of the different processes. It is clear that iodine evolution and the iodox cleanup process represent the most effective improvements over the basic cleanup of gas streams by scrubbers (with or without backup by Ag-Z) and the cleanup of liquid waste streams by macroreticular resins characteristic of current design practice. Unfortunately, reduction to commercial practice of these systems has not been projected to be completed before 1983. However, with the exception of some secondary systems for liquid cleanup ($HgNO_3$ suppression and, in the case of iodine evolution, macroreticular resin), all of the options display good cost-effectiveness, as shown in Table 6.0-1. It should also be noted that a second scrubber has apparently better cost-effectiveness than does Ag-Z, which is more appropriate as a polishing method for a bulk method of iodine removal. Finally, cost-effectiveness has been determined on a dollar per man-rem thyroid basis, shown in the last column of Table 6.0-1. It is readily seen that the cost of just about all systems listed, in terms of dollars spent to avoid one man-rem to the thyroid, is rather small, especially when compared to the NRC's interim value of $1,000/whole body or thyroid man-rem applicable to light water power reactors (26).

Although Table 6.0-1 does not display overall plant decontamination factors, it can be seen from Tables 3.0-1, 5.0-2, and

5.0-3 that conformance with the proposed thyroid dose limit of 75 mrem/yr can be readily achieved through use of a variety of combinations of systems exhibiting DF's of 100 or more. However, conformance with the proposed limit of 5 mCi/GW(e)-yr or 1.4 kg/yr for iodine-129 (0.225 Ci/yr from a 1500 MTHM facility) by 1983 will require a plant DF of no less than 300. This would be readily achieved by utilization of iodine evolution followed by the iodox process. Successful achievement of this level of cleanup without use of the iodox process will depend to some extent upon future operating experience with less sophisticated systems. Present estimates of their performance are quite conservative because of a paucity of operating experience, especially with respect to I-129. However, it is anticipated and highly probable that DF's greater than 300 for iodine-129 could be achieved by 1983 using appropriate combinations of scrubbers and Ag-Z, since a variety of options are available for improving, if necessary, the conservative levels of performance currently projected. These include a) tandem operation of systems, b) additives, such as thiosulfate to caustic scrubbers, to improve their efficiency (33) c) use of iodine evolution to reduce the fraction of iodine in the liquid waste stream and increase the efficiency of scrubbers by reducing the organic content of the gas streams, and d) demonstration of more efficient cleanup of liquid streams than currently assumed.

Table 3.0-1 Iodine Control Cost Summary[a]

Process	DF	Capital Cost (M$)	Annual Operating Cost (M$)	Present Worth: Operating Cost (M$)[b]	Total Present Worth (M$)[c]
1. Caustic Scrubbing	10	0.60	0.04	0.34	0.94
2. Mercuric Nitrate Scrubbing	10	0.60	0.12	1.02	1.62
3. Silver Zeolite Beds	10 (I-129) 100(I-131)	1.25	0.15	1.28	2.53
4. Adsorption on Macroreticular Resins	10 (I-129) 100(I-131)	0.4	0.04	0.34	0.74
5. Mercuric Nitrate Suppression	2	0.4	0.04	0.34	0.74
6. Iodox	10,000	2.07	0.22	1.87	3.94
A. Voloxidation[d]	4[e]	2.74	0.29	2.47	5.21
B. Iodine Evolution	200[e]	0.75	0.08	0.68	1.43

(a) All costs are expressed in millions of 1975 dollars.
(b) 10% & 20 years; present worth factor = 8.51356
(c) Total Present Worth = Capital Cost + (Annual Operating Cost x 8.51356)
(d) This system is not installed, primarily, to facilitate iodine control, and is listed only for completeness.
(e) These values do not represent actual DF's but represent a process efficiency factor.

Table 5.0-1 100-Year Cumulative Environmental Dose Commitment and Estimated Health Effects Attributable to Release of I-129 from a 1500 MTHM/yr Reprocessing Plant (a,b)

Source Term (Ci/yr)	DF	Thyroid Dose Commitment (man-kilorems)	Health Effects
60	1	1700	100
6	10	170	10
1.2	50	34	2
0.6	100	17	1
0.2	300	5.7	0.33
0.06	1000	1.7	0.1

(a) Partial environmental dose commitment and health effects are calculated for 100 years following release only and for a plant operating life of 20 years, commencing in 1983.

(b) Doses and health effects do not include short term, local impact of either iodine-129 or iodine-131. These are estimated to be 30 and 35 health effects, respectively, for a DF of 1.

Table 5.0-2 Maximum Individual Thyroid Doses from I-129 Discharged from a 1500 MTHM/yr Reprocessing Plant (for average consumptive levels)

DF	Source Term (Ci/yr)[a]	Maximum Individual I-129 Thyroid Dose (mrem/yr)[b]			
		6 month old	4 year old	14 year old	adult
1	60	1100	1600	600	140
10	6	110	160	60	14
50	1.2	22	32	12	2.8
100	0.6	11	16	6	1.4
300	0.2	3.7	5.3	2.0	0.47
1000	0.06	1.1	1.6	0.6	0.14

(a) The elemental iodine fraction is assumed to be 50%.

(b) Atmospheric dispersion coefficient equals 5×10^{-8} seconds per cubic meter; only the milk pathway is considered.

Table 5.0-3 Maximum Individual Doses from I-131 Discharged from a 1500 MTHM/yr Reprocessing Plant (for average consumptive levels)

DF	Source Term (Ci/yr)[a]	Maximum Individual I-131 Thyroid Dose (mrem/yr)[b]			
		6 month old	4 year old	14 year old	adult
1	1400	1900	2300	430	110
10	140	190	230	43	11
100	14	19	23	4.3	1.1
300	4.7	6.3	7.7	1.4	0.37
500	2.8	3.8	4.6	0.86	0.22
1000	1.4	1.9	2.3	0.43	0.11
10000	0.14	0.19	0.23	0.043	0.011

(a) Fuel cooled for 160 days before processing; the elemental iodine fraction is assumed to be 50%.

(b) Atmospheric dispersion coefficient equals 5×10^{-8} seconds per cubic meter; all pathways are considered.

Table 6.0-1 Cost Effectiveness of Iodine Control Systems at Fuel Reprocessing Plants

System		Cost Increment (M$)	Health Effects Averted	Cost per Health Effect (M$/HE)	Cost per Unit Thyroid Dose ($/man-rem)
A. Gaseous Phase Iodine					
1. Without Iodine Evolution	(a) $HgNO_3$ Scrubber	1.62	134	0.012	0.71
	(b) Iodox (no scrubbers)	3.94	149	0.26	1.6
	(c) Second Caustic Scrubber	0.94	13	0.072	4.3
	(d) Silver Zeolite (one scrubber)	2.53	14	0.181	11
2. With Iodine Evolution	(a) $HgNO_3$ Scrubber*	3.05	148	0.021	1.2
	(b) Iodox (no scrubbers)*	5.37	164	0.033	1.9
	(c) Second Caustic Scrubber	0.94	15	0.063	3.6
	(d) Silver Zeolite (one scrubber)	2.53	15	0.169	9.7
B. Liquid Phase Iodine					
1. Without Iodine Evolution	(a) Macroreticular Resin	0.74	15	0.049	2.9
	(b) Mercuric Nitrate Suppression	0.74	0.7	1.06	62
2. With Iodine Evolution	(a) Macroreticular Resin	0.74	0.8	0.93	53
	(b) Mercuric Nitrate Suppression	0.74	0.03	24.7	1,450

* Add incremental iodine evolution cost

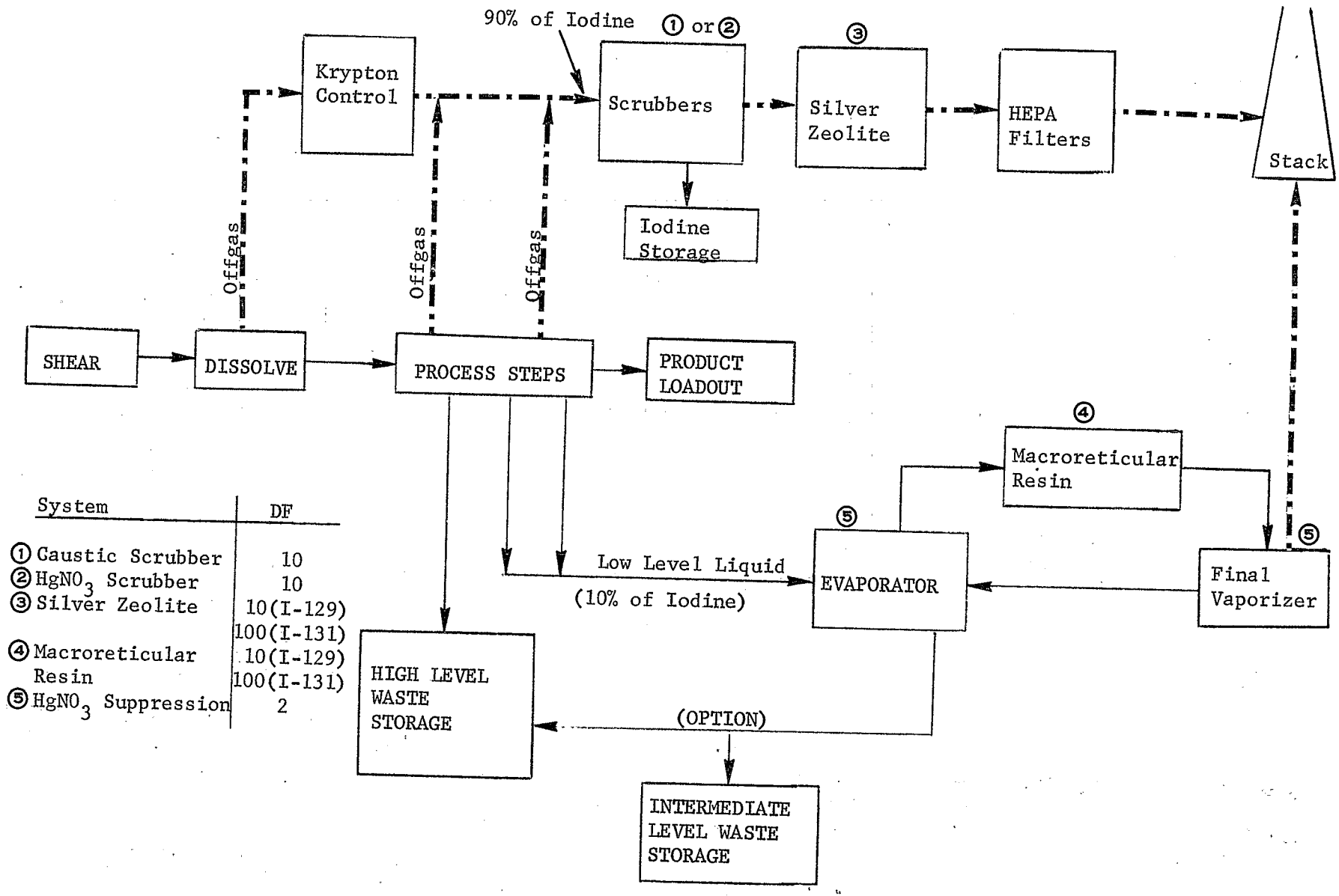

System	DF
① Caustic Scrubber	10
② $HgNO_3$ Scrubber	10
③ Silver Zeolite	10(I-129) 100(I-131)
④ Macroreticular Resin	10(I-129) 100(I-131)
⑤ $HgNO_3$ Suppression	2

Figure 3-1. SIMPLIFIED SCHEMATIC OF CURRENT IODINE CONTROL SYSTEMS AT REPROCESSING PLANTS

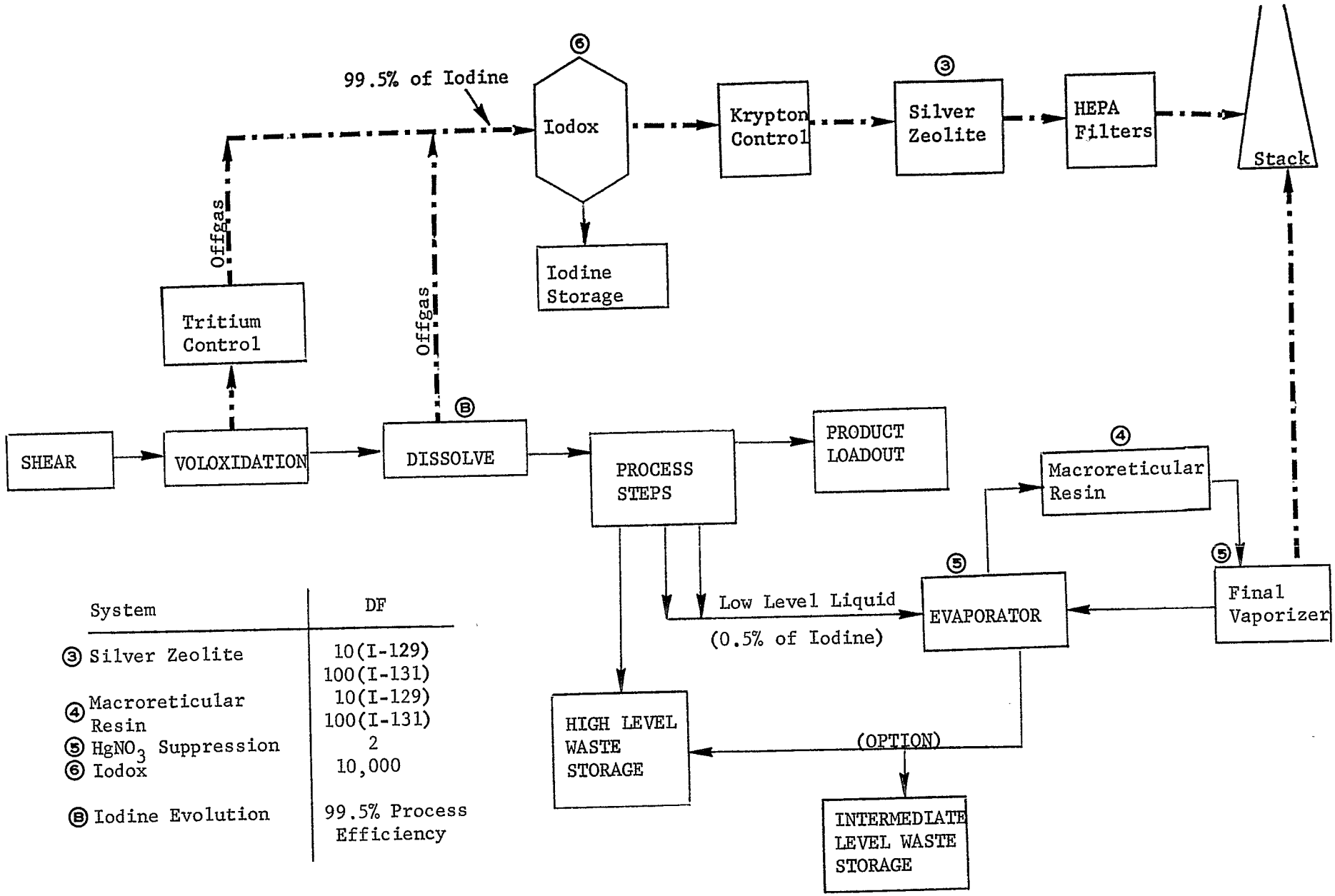

System	DF
③ Silver Zeolite	10(I-129) 100(I-131)
④ Macroreticular Resin	10(I-129) 100(I-131)
⑤ $HgNO_3$ Suppression	2
⑥ Iodox	10,000
Ⓑ Iodine Evolution	99.5% Process Efficiency

Figure 3-2. SIMPLIFIED SCHEMATIC OF ADVANCED IODINE CONTROL SYSTEMS AT REPROCESSING PLANTS

REFERENCES

(1) U.S. ENVIRONMENTAL PROTECTION AGENCY. Environmental Analysis of the Uranium Fuel Cycle, Part III - Nuclear Fuel Reprocessing, EPA-520/9-73-003-D. Office of Radiation Programs, Environmental Protection Agency, Washington, D.C. 20460 (October 1973).

(2) MAGNO, P.J., et al.. Liquid Waste Effluents from a Nuclear Fuel Reprocessing Plant, BRH/NERHL 70-2 (November 1970).

(3) OAK RIDGE NATIONAL LABORATORY. Siting of Fuel Reprocessing Plants and Waste Management Facilities, ORNL-4451 (July 1970).

(4) FINNEY, B.C., et al.. Correlation of Radioactive Waste Treatment Costs and the Environmental Impact of Waste Effluents in the Nuclear Fuel Cycle for Use in Establishing "As Low as Practicable" Guides - Nuclear Fuel Reprocessing, ORNL-TM-4901 (May 1975).

(5) YARBRO, O.O.. Supplementary Testimony Regarding the State of Technology for and Practicality of Control and Retention of Iodine in a Nuclear Fuel Reprocessing Plant, Barnwell Hearings, AEC Docket No. 50-332 (October 1974).

(6) DAVIS, W., Jr.. Models for Calculating the Effects of Isotopic Exchange, Radioactive Decay, and of Recycle in Removing Iodine from Gas and Liquid Streams, ORNL-5060 (September 1975).

(7) YARBRO, O.O., J.C. MAILEN, AND W.S. GROENIER, Iodine Scrubbing From Off-Gas With Concentrated Nitric Acid, 13th AEC Air Cleaning Conference (1974).

(8) GROENIER, W.S.. An Engineering Evaluation of the Iodox Process: Removal of Iodine from Air Using a Nitric Acid Scrubbing in a Packed Column, ORNL-TM-4125 (August 1973).

(9) NEWMAN, R.I.. Fourth Supplement to Direct Testimony of Robert I. Newman, Barnwell Hearings, AEC Docket No. 50-332.

(10) U.S. PUBLIC HEALTH SERVICE. Air Pollution Engineering Manual, 999-AP-40 (1967).

(11) OAK RIDGE NATIONAL LABORATORY. Aqueous Processing of LMFBR Fuels - Technical Assessment and Experimental Program Definition, ORNL-4436 (June 1970).

(12) OAK RIDGE NATIONAL LABORATORY. Aqueous Fuel Reprocessing Quarterly Report for Period Ending June 30, 1973, ORNL-TM-4301 (August 1973).

(13) OAK RIDGE NATIONAL LABORATORY. Aqueous Fuel Reprocessing Quarterly Report for Period Ending March 31, 1973, ORNL-TM-4240 (June 1973).

(14) PENCE, D.T., et al.. Application of Metal Zeolites to Nuclear Fuel Reprocessing Plant Off-Gas Treatment, ANS Trans. 15, 1, Las Vegas (1972).

(15) ACKLEY, R.D. AND R.J. DAVIS. Effect of Extended Exposure to Simulated LMFBR Fuel Reprocessing Off-Gas on Radioactive Trapping Performance of Sorbates, ORNL-TM-4529.

(16) ALLIED-GULF NUCLEAR SERVICES. Barnwell Nuclear Fuel Plant - Environmental Report, Docket No. 50-332 (November 1971).

(17) UNGER, W.E., et al.. LMFBR Fuel Cycle Studies Progress Report for August, November and December 1970, ORNL-TM-3281, ORNL-TM-3127, and ORNL-TM-3250.

(18) ALLIED-GENERAL NUCLEAR SERVICES. Barnwell Nuclear Fuel Plant Final Safety Analysis Report (October 1973).

(19) OAK RIDGE NATIONAL LABORATORY. Aqueous Fuel Reprocessing Quarterly Report for Period Ending March 31, 1974, ORNL-TM-4587 (June 1974).

(20) ATOMIC INDUSTRIAL FORUM, INC. Technical Assessment of Specific Aspects of EPA Proposed Environmental Radiation Standard for the Uranium Fuel Cycle (40 CFR 190) and Its Associated Documentation, AIF/NESP-011 (February 1976).

(21) OAK RIDGE NATIONAL LABORATORY. Voloxidation-Removal of Volatile Fission Products from Spent LMFBR Fuels, ORNL-TM-3723 (January 1973).

(22) NATIONAL COUNCIL ON RADIATION PROTECTION AND MEASUREMENTS. Krypton-85 in the Atmosphere-Accumulation, Biological Significance, and Control Technology, Report No. 44 (July 1975).

(23) U.S. ENVIRONMENTAL PROTECTION AGENCY. Environmental Analysis of the Uranium Fuel Cycle, Part II - Nuclear Power Reactors, EPA-520/9-73-003-C. Office of Radiation Programs, Environmental Protection Agency, Washington, D.C. 20460 (November 1973).

(24) UNITED NATIONS SCIENTIFIC COMMITTEE ON THE EFFECTS OF ATOMIC RADIATIONS. Ionizing Radiation: Levels and Effects, Vol. II, United Nations Publication E.72.IX.18, New York (1972).

(25) CEDERBERG, G.K. AND D.K. MACQUEEN. Containment of Iodine-131 Released by the RALA Process, IDO-14566 (October 1961).

(26) U.S. NUCLEAR REGULATORY COMMISSION. Opinion of the Commission: In the Matter of Rulemaking Hearing, Numerical Guides for Design Objectives and Limiting Conditions for Operation to Meet the Criterion "As Low As Practicable" for Radioactive Material in Light-Water-Cooled Nuclear Power Reactor Effluents, Docket No. RM-50-2 (May 5, 1975).

III. NUCLEAR FUEL REPROCESSING

B. Control of Krypton Discharges From Nuclear Fuel Reprocessing Facilities

1.0 Introduction

The Environmental Protection Agency has undertaken an exhaustive review of the technology and economics of krypton control at nuclear fuel reprocessing plants. During this review, EPA has contacted krypton control equipment vendors, visited national laboratories where krypton control equipment is being developed or applied, and discussed a variety of aspects of krypton control with individuals knowledgable in the techniques of fuel reprocessing.

In the following discussion, current estimates of the costs and control efficiencies of control systems for Kr-85 are reviewed. The benefits to be gained by reducing the environmental dose commitments associated with the release of krypton through installation of such systems are then set forth. Finally, the level of cost-effectiveness of cryogenic distillation applied to different fuel reprocessing plant designs is determined.

2.0 Source Terms for Krypton

The quantities of fission products present in spent uranium fuel have been previously reported, based on calculations using the computer code ORIGEN (1). For krypton-85 this value is 10,500 Ci/MTHM (expressed in curies per metric ton of heavy metal in the fuel). The following fuel parameters were used in this report:

Burnup = 33,000 MWd/MTHM

Average Specific Power = 30 MW/MTHM

Cooling Time = 160 days.

It is assumed that a light-water-cooled power reactor operates at 33% thermal efficiency, producing approximately 33 MTHM of spent fuel with this burnup for each gigawatt-year of electric power (GW(e)-yr), and that a typical fuel reprocessing plant has a throughput capacity of 2100 MTHM per year. Such a plant would be capable of processing the spent fuel from about 64 such reactors each year.

If no krypton control systems were installed at a 2100 MT plant, 22 million curies of krypton-85 would be discharged annually. It is assumed that krypton-85 is discharged to the atmosphere, rather than into liquid pathways, since currently projected plants use complete recycle of process liquids and thus no liquid discharges are planned.

3.0 Control Technologies for Krypton at Reprocessing Plants

Since krypton is a chemically inert noble gas, it follows the process off-gas stream in the fuel reprocessing plant and will be discharged to the atmosphere unless specially designed air-cleaning systems are used to capture it. Standard air-cleaning systems based on chemical processes are ineffective in collecting noble gases. Most of the krypton produced by the fission process in the reactor is released to the off-gas stream during dissolution of the spent fuel (2,3). A small fraction is also released during the shearing operation, but this fraction is also routed to the main off-gas stream. Thus, all of the krypton-85 present in the spent fuel is collected in one stream, along with other contaminants, such as oxides of nitrogen, hydrocarbons, and other radioactive materials.

Two basic systems are in advanced stages of development for the control of krypton-85: the cryogenic distillation system and the selective absorption system. These are discussed in turn, briefly, below:

3.1 Cryogenic Distillation

This process is widely used in industry, where it is better known as the "liquid air" process and is used to condense and separate the various gaseous components of air. Heat is removed from air in the gaseous form in a closed system until the boiling points of the various gaseous components are reached. As the boiling point of each component is reached, it liquifies and can be separated from the remaining gaseous components having lower boiling points. Since krypton has a boiling point of minus 224°F and the two major gases in

air, nitrogen and oxygen, have boiling points of minus 322°F and minus 297°F, respectively, liquifaction and separation of the krypton poses no serious technical problem. Several descriptions of the application of cryogenic distillation for the removal of noble gases from the off-gas at nuclear power plants are available (4-11).

The most serious potential difficulty associated with cryogenic systems is the possibility of explosions due to a buildup of hydrogen, acetylene, hydrocarbons, and oxygen (or ozone) in the system (8). This can be avoided by chemically removing all oxygen before the gas stream is introduced into the cryogenic apparatus (4). Thus, in order to use this process, two additional systems are required: a) a catalytic converter system to convert oxygen to water, hydrocarbons to carbon dioxide, followed by, b) a system for removal of these products as well as the oxides of nitrogen. In addition to determining that the explosion potential of the cryogenic systems is effectively removed by precleaning the gas stream following use of a catalytic converter, a full assessment of the remote operation and maintenance capabilities of this system must be completed in the interim. It should be noted that the Japanese are installing a cryogenic distillation system on the Tokai-Mura fuel reprocessing plant so that operating data will be available within the next one or two years (12).

The cryogenic system itself is expected to exhibit a decontamination factor (DF) of at least 1000 (4-6). However, the overall efficiency for removal of krypton from the plant is expected

to be somewhat lower because of potential leakage through the system during startup and shutdown operations, maintenance, etc. Therefore, an effective plant DF of between 10 and 100 has been projected for routine operation of such a system (13).

3.2 Selective Absorption

This process was developed at the Oak Ridge Gaseous Diffusion Plant (ORGDP), initially for reactors, and more recently specifically for the control of krypton-85 at fuel reprocessing plants (14,15). The process is based on preferential dissolution of noble gases in a fluorocarbon sorbent, such as the refrigerant freon-12. The off-gas stream is passed through the sorbent in an absorber column at a relatively low temperature and high pressure. Essentially all of the krypton and xenon present are dissolved in the sorbent, along with other components of the gas stream. The other components are then removed in a fractionating desorption system and, essentially free of krypton and xenon, recycled to the off-gas stream. The sorbent is then transferred to a stripper system where a product gas concentrated in krypton and xenon is evolved and collected. The pure sorbent is then regenerated and returned to the absorber column.

The selective absorption process has exhibited a decontamination factor greater than 1000 in tests with nitrogen oxides and carbon dioxide (8). However, further investigations are expected to be accomplished to define the relevant auxiliary systems required for successful application. Although the selective absorption system is free from chemical explosion and fire hazards, however, the selective absorption system does operate at positive pressures of from 50 psig to 350 psig

(32). This system has also not been demonstrated at an operating commercial reprocessing plant. However, it has been offered commercially for use on the gaseous effluents from nuclear power reactors (16). A recent review concluded that additional process development is needed to determine long-term impurity effects, process reliability, and optimum operating parameters (32). Selective absorption could be reduced to practice by 1983 provided that an orderly program of engineering development, construction, and demonstration is pursued (8).

In order to satisfy the proposed standards, storage for 40-70 years would be required, depending upon the degree of initial decontamination achieved, in order to insure adequate decay. The management of krypton-85 following its collection has been addressed by Foster and Pence (17) and appears to present no serious problems. They reviewed the advantages and disadvantages of long-term storage of krypton-85 in high pressure steel cylinders and concluded that this appears to be a practical method for the storage of radioactive gases. Other methods that appear to offer more safety for comparable cost are encapsulation by Sodalite and metal film deposition, which are under evaluation at Idaho and Hanford. Both methods convert the recovered Kr-85 into a low probability release form for increased safety during transport and storage (22).

4.0 Cost of Krypton Control at Fuel Reprocessing Plants

Over the past few years, many individual estimates of the cost of removing krypton from the off-gas at fuel reprocessing plants have been offered (8,19,20,24,27). Typically, each cost given includes or excludes items relative to other cost estimates so that comparison is rather difficult. Costs have been given for retrofit situations and for different krypton control alternatives. The Agency has therefore undertaken an in-depth review of the technology and economics of krypton control at nuclear fuel reprocessing plants. During this review, equipment vendors, national laboratories, and experts in fuel reprocessing technology have been consulted.

In considering the cost of krypton control at reprocessing plants, it is appropriate to determine such costs on a generic basis. Therefore, certain parameters applicable to future reprocessing plants that would affect krypton control costs have been assessed and typical anticipated values determined:

(1) Plant size: 2100 MTHM per year. Past experience has shown an increase in the capacity of fuel reprocessing plants, from the 1 MTU/day NFS plant to the 5 MTU/day Barnwell plant. Exxon has recently submitted an application for a plant with an expected capacity of 2100 MTHM per year, or about 7 MTU/day (21,29).

(2) Total Gas Flow for Kr-85 Processing: 50-100 scfm. The total off-gas flow that must be treated is determined by shear enclosure design and the use of air or other gases for sparging the dissolver tanks. Review of the state of the art and discussions with personnel regarding optimum and realistic operational flow rates indicate that future plants can be designed with total air flow considerably lower than estimated for Barnwell (550 scfm) but not as low as the 25 scfm anticipated in the Exxon application (20-22). The 25 scfm estimated flow rate estimated for the Exxon plant probably would require additional costs for leak tightness in the shear and dissolver sections. Allowing for realistic leakages, a flow of 75 scfm to 100 scfm could be achieved such that the costs for leak tightness at this level would be offset by a reduction in the size of non Kr-85 control equipment (such as iodine scrubbers, adsorbers, particulate filters, etc.) (22).

Although both the cryogenic distillation and the selective absorption systems are in advanced stages of development it has become clear that the cryogenic approach to krypton control is much closer to reality than selective absorption. Cryogenic systems are presently offered for reactor off-gas cleanup and one such system has been purchased for use at the Tokai-Mura fuel reprocessing plant in Japan. Selective absorption is still undergoing development at the Oak Ridge Gaseous Diffusion Plant and will not be ready for testing with radioactive materials until 1980. Therefore, the most detailed and reliable cost estimates for krypton control are available for the

cryogenic distillation approach. In the following sections, cost estimates are developed for a generic fuel reprocessing plant at off-gas flow rates of 50 scfm and 100 scfm, and also for the Barnwell plant, using a partially redundant system. For comparison, a recent cost estimate for the Barnwell plant, using a fully redundant system, has also been included (20). Table 4.0-1 summarizes these estimates while the following sections describe in detail the basis for them. It should be noted that the cost estimates for a generic plant are considered appropriate to the great majority of future reprocessing plants; for the first facility which incorporates krypton control, higher costs are anticipated to be incurred (on the order of 10-15% higher overall) (22).

4.1 Direct Costs

Direct costs include the cost of the processing equipment itself, costs associated with the labor and materials necessary to install the equipment in the plant, and finally, the price of structures and buildings needed to properly house the equipment. All costs are given in first quarter 1976 dollars and are based on the most recent information available (18-20,22-24).

Equipment costs may be influenced greatly by the degree and type of redundancy presumed. Complete redundancy of all components may be achieved by providing an exact duplicate of the primary processing equipment train. Alternatively, duplicates of only certain equipment items may be provided on an installed basis, or kept on the site for ready installation. Except for the fully redundant "Barnwell" estimate, the equipment cost estimates in Table 4.0-1 presume

installed redundancy of key components, including gas cleanup and compressors, and are based on the most recent information available (18-20,22-24). Gas cleanup includes hydrogen-oxygen catalytic recombination and catalytic removal of the oxides of nitrogen. The cold box contains the distillation columns for the recovery and purification of krypton while the LN system is sized according to the distillation column requirements. Costs for product handling are appropriate to storage in steel cylinders for a few years. Storage in Sodalite or via metal film deposition would be approximately $715,000 more expensive in direct costs but offer greater safety in storage and transport (22). Redundant compressors are provided for all systems as these contain many moving parts under high stress.

Installation includes all of the labor and materials needed at the site to integrate the krypton control system into the fuel reprocessing plant. Such items as installed piping, instrumentation, electrical equipment, and the various control equipment are considered as installation costs; altogether these costs are estimated to be equivalent to 75% of the equipment cost (22). Finally, costs for the necessary structures and buildings to properly house the equipment are included as a direct cost.

4.2 Indirect Costs

Indirect costs include engineering design, field erection costs, owners costs, interest during construction, and a contingency allowance. For the generic design and partially redundant Barnwell design cost estimates, these indirect cost factors were estimated to

be equivalent to certain percentages of the direct cost (22):

Engineering Design.....	15%
Field Erection.....	50%
Owners Costs.....	5%
Contingency.....	25%
Interest During Construction.....	30%

As shown in Table 4.0-1, the estimate for the fully redundant Barnwell system also includes $12,500,000 for escalation to account for inflationary trends between now and the time when the money is spent (1979-1980). Since this cost factor is not appropriate for a present worth determination and is not considered in the other cost estimates, it has been deleted from the fully redundant cost estimate to maintain consistency. The other estimates presume that the money is spent in the first quarter of 1976.

Contingency is included as an indirect cost for the generic designs and the partially redundant Barnwell system; for these systems contingency represents a cost of 25% of the direct costs. For the fully redundant Barnwell estimate (20), contingency was presumed to be 40% of all direct and indirect costs, excluding escalation.

Total capital cost is the sum of the direct and indirect costs.

4.3 Operating and Maintenance Costs

Operating and maintenance (O&M) costs entail costs for utilities and the labor and equipment necessary for maintenance. For krypton removal equipment utility costs include electricity, liquid nitrogen, hydrogen, cooling water, and operating labor. A number of cost estimates have been made for krypton removal equipment O&M costs and these have been used to determine the O&M costs shown in Table 4.0-1

(18-20,22).

4.4 Present Worth

For present worth calculations, a 10% discount rate was used along with an assumed 20 year equipment lifetime. Under these conditions, the present worth factor is 8.51356. In order to calculate present worth for the krypton removal systems, the present worth of the annual operating and maintenance costs was added to the total capital cost. As shown in Table 4.0-1 the present worth of the generic fuel reprocessing plant krypton removal systems ranges between 18 and 24 million dollars, while for the Barnwell design, estimated present worth costs range from 38.3 to 44.6 million dollars.

Table 4.0-1

ESTIMATED CAPITAL AND PRESENT WORTH COSTS OF KRYPTON CONTROL SYSTEMS

Cost Item	ESTIMATED COSTS ($1,000) (a) GENERIC DESIGN ESTIMATES (b) 50 scfm	100 scfm	"BARNWELL" DESIGN 550 scfm (c) Partially Redundant	Fully Redundant
DIRECT COSTS				
Equipment				
Gas Cleanup	1,200	1,500	2,600	2,600
Cold Box	2,000	2,500	3,830	7,660
LN_2 System	50	75	93	93
Product Loadout	265	265	265	265
Transfer Cask	20	20	20	20
Compressors	100	100	100	100
Installation	2,900	3,880	4,080	5,100
Structures, Buildings	400	750	900	1,500
Sub-Total: DIRECT COSTS	6,940	9,100	11,900	17,300
INDIRECT COSTS	6,940	9,100	11,900	4,900
Escalation	-----	-----	-----	(12,500) (e)
Contingency	1,740	2,300	3,000	8,800
TOTAL CAPITAL COST	15,620	20,500	26,800	31,000
Annual O&M Cost	300	425	1,350	1,600
PRESENT WORTH: ANNUAL COST	2,550	3,620	11,500	13,600
TOTAL PRESENT WORTH (d)	18,200	24,100	38,300	44,600

(a) First quarter 1976 dollars
(b) 2100 MTHM per year
(c) 1500 MTHM per year; fully redundant cost estimate from reference 20.
(d) Present Worth = Capital Cost + (Annual Cost x 8.51356); 10% Discount Rate, 20 yr. Control System Lifetime.
(e) Escalation to 1983 not applicable to this present worth determination

5.0 Doses and Potential Health Impact Attributable to Krypton Discharges from Fuel Reprocessing

It is estimated that 157 potential health effects would result from the uncontrolled release of krypton-85 for 20 years from a 2100 MTHM/yr fuel reprocessing plant. This includes 84 whole body health effects, 56 gonadal health effects, and the remainder from exposure of the lungs to krypton-85 in the atmosphere. For a 1500 MTHM/yr plant such as Barnwell, the Kr-85 source term and health effects would be proportionately smaller. The distribution of potential health effects is shown below for the two types of plants:

Health Effects	2100 MTHM/yr "Generic Plant"	1500 MTHM/yr Barnwell
Whole Body	84	60
Gonads	56	40
Lungs	17	12
	157	112

Plant startup in 1983 and a useful lifetime of control equipment of 20 years is assumed. A simple model for krypton transport which assumes immediate and uniform dispersion into the world's atmosphere was used to estimate worldwide doses. Total doses calculated using this simple model agree with results from a more detailed multicompartment treatment described by Machta, Ferber, and Hefter (25,26) within a few percent, although the two models do differ regarding the regional distribution of doses delivered immediately following release. Other parameters, such as population growth and distribution, dosimetry, and dose-effect relationships, were handled as described in the previous analysis (27).

6.0 Cost-Effecitveness of Krypton Control at Fuel Reprocessing Plants

Previous sections have detailed the krypton-85 source term and potential health impacts of a 2100 MTHM per year fuel reprocessing plant; additionally, cost estimates for the control of krypton-85 from such a plant, as well as the 1500 MTHM per year Barnwell plant, have been made. Table 6.0-1 pulls together the principal data needed to perform a cost-effectiveness evaluation for the control of krypton of nuclear fuel reprocessing plants. As shown, cost-effectiveness may be analyzed either with respect to dollars spent to avoid health effects or in terms of dollars spent to avoid population exposure in man-rems.

In evaluating krypton control costs, therefore, the EPA has considered the cost of applying cryogenic distillation at "generic" plants (2100 MTHM/yr) with off-gas flow rates of 50-100 scfm and at the Barnwell plant, which is a retrofit case. It should be noted that although the Barnwell plant has been designed so that krypton control can be applied, it was not designed to minimize the cost of such krypton control and as a result has a very large off-gas flow, on the order of 550 scfm (20). This large (550 scfm) flow is a maximum flow rate and operating experience may show that lower flow rates are achievable with minor changes in the shear and dissolving enclosures. Costs for krypton control and the associated reduction in population doses and potential health effects are shown in Table 6.0-1. In considering averted health effects and man-rem, it was assumed that the cryogenic system would operate 90% of the time needed at a decontamination factor of 100 (i.e., 99% removal). The fully redundant Barnwell system, however, is assumed to operate 95% of the time, also with 99% removal efficiency. In order to determine the

Table 6.0-1

COST-EFFECTIVENESS OF KRYPTON CONTROL AT FUEL REPROCESSING PLANTS

Plant Design	Total Present Worth ($1,000)	POPULATION DOSE AVERTED (man-kilorem)			Health Effects Averted	$/MAN-REM AVERTED			$/H.E. AVERTED
		Whole Body	Gonads	Lungs		Whole Body	Gonads	Lungs	
GENERIC DESIGNS[a]									
50 SCFM	18,200	187	249	374	140	52	26	5	130,000
100 SCFM	24,100	187	249	374	140	69	35	7	170,000
"BARNWELL" DESIGNS[b]									
Partially Redundant	38,300	131	178	267	100	157	77	15	380,000
Fully Redundant(c)	44,600	141	188	282	105	169	85	17	425,000

(a) 2100 MTHM per year (the design capacity of the proposed Exxon facility, which projects an offgas flow rate of 25 scfm.)
(b) 1500 MTHM per year; 550 scfm is the reported maximum offgas flow rate for Barnwell (see text)
(c) From Reference 20.

fraction of present worth costs spent to avoid population doses, the breakdown of potential health effects given in the previous section was used. Thus the fraction 84/157 was applied to the $18,200,000 present worth cost of the 50 scfm generic design system to calculate the amount of money spent to avoid whole body dose. This result was then used to determine the amount of money spent per man-rem to the whole body avoided. It can be seen that the costs per man rem for all of the systems and organs considered are rather small especially when compared to the NRC's interim value of $1,000/whole body or thyroid man-rem applicable to light water power reactors (30).

REFERENCES

(1) OAK RIDGE NATIONAL LABORATORY. Siting of Fuel Reprocessing and Waste Management Facilities, ORNL-4451 (July 1970).

(2) COCHRAN, J.A., et al.. An Investigation of Airborne Radioactive Effluent from an Operating Nuclear Fuel Reprocessing Plant, BRH/NERHL 70-3 (July 1970).

(3) GOODE, J.H.. Hot Cell Evaluation of the Release of Tritium and Krypton-85 during Processing of ThO - UO Fuels, ORNL-3956 (June 1966).

(4) DAVIS, J.S., AND J.R. MARTIN. A Cryogenic Approach to Fuel Reprocessing Gaseous Radwaste Treatment, in "Noble Gases," Stanley, R.E., and Moghissi, A.A., Editors, U.S. Environmental Protection Agency, CONF-730915, Las Vegas (September 1973).

(5) SCHMAUCH, G.E.. Cryogenic Distillation - An Option for Off-Gas Treatment, ASME for presentation at the Winter Annual Meeting, New York, New York (November 17-22, 1974).

(6) FEIBUSH, A.M.. Cryogenic Distillation, Separation Process for Power Reactor Gaseous Radwaste, Airco/BOC Cryogenic Plants Corp., Murray Hill, N.J.

(7) THRALL, G.M. AND D.F. PILMER. A Cryogenic System for Processing Waste Gas From a PWR Generating Station, 19th Annual Meeting of the Institute of Environmental Sciences, Anaheim (April 1973).

(8) FINNEY, B.C., et al.. Correlation of Radioactive Waste Treatment Costs and the Environmental Impact of Waste Effluents in the Nuclear Fuel Cycle for Use in Establishing "As Low as Practicable" Guides - Nuclear Fuel Reprocessing, ORNL-TM-4901 (May 1975).

(9) BENDIXSEN, C.K., AND F.O. GERMAN. Operation of the ICPP Rare Gas Recovery Facility at the Idaho Chemical Processing Plant, Idaho Nuclear Corp., IN-1221 (April 19, 1969).

(10) BENDIXSEN, C.L. AND F.O. GERMAN. Operation of the ICPP Rare Gas Recovery Facility During Fiscal Year 1970, Allied Chemical Corp., ICP-1001 (October 1971).

(11) NICHOLS, J.P., AND F.T. BINFORD. Status of Noble Gas Removal and Disposal, ORNL-TM-3515 (August 1971).

(12) NUCLEAR NEWS. Vol. 19, No. 7 (May 1976).

(13) BUCKHAM, James A.. Second Supplement to the Direct Testimony of James A. Buckham, Barnwell Hearings, AEC Docket No. 50-332.

(14) MERRIMAN, J.R. AND J.H. PASHLEY. Engineering Development of an Absorption Process for the Concentration and Collection of Krypton and Xenon, Union Carbide K-1770 (March 1969).

(15) STEPHENSON, et al.. Experimental Investigation of the Removal of Krypton and Xenon from Contaminated Gas Streams by Selective Absorption in Fluorocarbon Solvents, Union Carbide K-1780 (August 1970).

(16) HOGG, R.M.. New Radwaste Retention System, Nuclear Engineering International 17 (189) (1972).

(17) FOSTER, B.A. AND D.T. PENCE. An Evaluation of High Pressure Steel Cylinders for Fission Product Noble Gas Storage, TID-4500 (February 1975).

(18) FEIBUSH, Arthur. Barnwell Hearing Testimony, pp. 3840-3915, NRC Docket No. 50-332 (October 15, 1975).

(19) BUCKHAM, James. Barnwell Hearing Testimony, pp. 3916-4060, NRC Docket No. 50-332 (October 15, 1975).

(20) AFFIDAVIT OF JAMES A. BUCKHAM. Submitted with supplemental submission of Allied-General Nuclear Services in connection with EPA's public hearings March 8-10, 1976 on Environmental Radiation Protection Standards for Nuclear Power Operations (April 2, 1976).

(21) EXXON NUCLEAR COMPANY, INC. Nuclear Fuel Recovery and Recycling Center PSAR, submitted for acceptance review, 1/28/76, NRC Public Document Room, Washington, D.C.

(22) KOVACH, J.L., Nuclear Consulting Services, Columbus, Ohio. Technology and Cost Evaluation of Krypton-85 Control for Nuclear Fuel Reprocessing Plants, prepared for U.S. Environmental Protection Agency, Office of Radiation Programs, Washington, D.C. 20460 (August 1976).

(23) U.S. NUCLEAR REGULATORY COMMISSION. Regulatory Guide 1.110 (issued for comment): Cost-Benefit Analysis for Radwaste Systems for Light-Water-Cooled Nuclear Power Reactors, Office of Standards Development, U.S. Nuclear Regulatory Commission, Washington, D.C. 20555 (March 1976).

(24) ATOMIC INDUSTRIAL FORUM, INC. Technical Assessment of Specific Aspects of EPA Proposed Environmental Radiation Standard for the Uranium Fuel Cycle (40 CFR 190) and Its Associated Documentation, AIF/NESP-011 (February 1976).

(25) MACHTA, L., FERBER, G.J., AND HEFFTER, J.L.. Regional and Global Scale Dispersion of Krypton-85 for Population Dose Calculations, in Physical Behavior of Radioactive Contaminants, in the Atmosphere, International Atomic Energy Agency, Vienna (1974).

(26) NATIONAL COUNCIL ON RADIATION PROTECTION AND MEASUREMENTS. Krypton-85 in the Atmosphere-Accumulation, Biological Significance, and Control Technology, Report No. 44 (July 1975).

(27) U.S. ENVIRONMENTAL PROTECTION AGENCY. Environmental Analysis of the Uranium Fuel Cycle, Part III - Nuclear Fuel Reprocessing, EPA-520/9-73-003-D, Office of Radiation Programs, Environmental Protection Agency, Washington, D.C. 20460 (October 1973).

(28) STEPHENSON, M.J., R.S. EBY, J.H. PASHLEY. Flurocarbon Absorption Process for the Recovery of Krypton from the Off-Gas of Fuel Reprocessing Plants, K-GD-1390, Oak Ridge Gaseous Diffusion Plant, Oak Ridge, Tennessee (January 28, 1976).

(29) NUCLEONICS WEEK. (February 5, 1976).

(30) U.S. NUCLEAR REGULATORY COMMISSION. Opinion of the Commission: In the Matter of Rulemaking Hearing, Numerical Guides for Design Objectives and Limiting Conditions for Operation to Meet the Criterion "As Low As Practicable" for Radioactive Material in Light-Water-Cooled Nuclear Power Reactor Effluents, Docket No. RM-50-2 (May 5, 1975).

☆ U.S. GOVERNMENT PRINTING OFFICE: 1976—626-773/910