United States
Environmental Protection
Agency

Solid Waste and
Emergency Resonse
(5305W)

EPA530-R-95-036
June 1995

EPA

Guidance for the Sampling and Analysis of Municipal Waste Combustion Ash For the Toxicity Characteristic

MKIF-SC006

EPA Pub No.: EPA530-R-95-036

GUIDANCE FOR THE SAMPLING AND ANALYSIS OF MUNICIPAL WASTE COMBUSTION ASH FOR THE TOXICITY CHARACTERISTIC

June 1995

Office of Solid Waste
U.S. Environmental Protection Agency
401 M Street, SW
Washington, DC 20460

TABLE OF CONTENTS

Section		Page No.
I.	INTRODUCTION: PURPOSE OF THIS GUIDANCE DOCUMENT	1
II.	THE SAMPLING APPROACH	3
III.	ANALYSIS FOR THE TOXICITY CHARACTERISTIC	8
IV.	QUALITY ASSURANCE AND QUALITY CONTROL	13
V.	TCLP DATA EVALUATION	14
VI.	REFERENCES	19

APPENDIX: DEFINITIONS OF TERMS USED IN THE GUIDANCE

I. INTRODUCTION: PURPOSE OF THIS GUIDANCE DOCUMENT

The purpose of this document is to assist generators of ash from municipal waste combustion facilities in determining whether their ash is hazardous because it exhibits the Toxicity Characteristic (TC). This document is guidance, and ash generators are not required by regulation or otherwise to follow its approach to sampling and analysis for the TC. It is also not intended that this guidance be used to replace the guidance or requirements for TC determinations developed by authorized States or for the sampling and analysis of ash for any other purpose under State or local programs.

The Toxicity Characteristic (40 CFR § 261.24) is one of four characteristics described in Subpart C of 40 CFR part 261 by which a hazardous waste is identified. A hazardous waste identified by any one of these characteristics, including the TC, is subject to the notification requirements of section 3010 of the Resource and Recovery Act (RCRA) and all applicable requirements under parts 262 through 265, 268 and 270 of the RCRA regulations. A TC determination is the responsibility of the generator, and is generally made by either testing using the Toxicity Characteristic Leaching Procedure (TCLP), or by using knowledge of the process (pursuant to 40 CFR 262.11). All solid waste, unless excluded by 40 CFR § 261.4, is subject to this determination.

Ash generated by municipal waste combustion (MWC) facilities with resource recovery is not exempt from RCRA, Subtitle C, regulation. Therefore, persons who generate such ash must determine whether their ash is hazardous because it exhibits the TC. Ash first becomes subject to this hazardous waste determination at the point that the ash leaves the "resource recovery facility", defined as the combustion building (including connected air pollution equipment). For further information regarding the Agency's interpretation of when RCRA, Subtitle C, jurisdiction begins for MWC ash at waste-to-energy facilities, see 60 FR 6666, February 3, 1995 and EPA's "Revised Implementation Strategy for City of Chicago vs. EDF Municipal Waste Combustion Ash (MWC) Supreme Court Decision" found in the public docket for this guidance (Docket No. F-95-MRIF-FFFFF). Any ash that exhibits the TC when exiting the combustion building must be managed in compliance with all applicable Subtitle C requirements.

This guidance assumes that the generator has elected to conduct testing to determine whether the ash exhibits the TC for any of the TC contaminants. In addition to general information regarding this determination, this document includes a sampling and analysis approach which is one example of a prescriptive sampling and analysis plan that can be used by MWC facilities, especially those that do not have the resources to develop their own plans. The Agency maintains that, where possible, generators should use

the guidance of Chapter Nine in "Test Methods for Evaluating Solid Waste, Physical/Chemical Methods" (SW-846), the Agency's guidance for all RCRA sampling (including TC determinations), to develop a sampling and analysis plan tailored to site-specific conditions and to meet the data quality objectives (DQOs) of the study.

This document contains the following sections:

II. The Sampling Approach: Discusses typical concerns during development of a sampling plan, and presents one example of an approach to ash sampling.

III. Analysis for the Toxicity Characteristic: Describes analysis using the TCLP from "Test Methods for Evaluating Solid Waste, Physical/Chemical Methods"(SW-846) for the contaminants listed in 40 CFR § 261.24.

IV. Quality Assurance and Quality Control: Discusses the importance of quality assurance/quality control (QA/QC) and references portions of SW-846 that contain information regarding QA/QC.

V. TCLP Data Evaluation: Describes criteria for evaluating data to determine whether ash is hazardous for the TC.

VI. References: Provides a listing of resources for designing a sampling and analysis plan.

Appendix: Definitions of Terms Used in the Guidance

II. THE SAMPLING APPROACH

As explained in "Introduction: Purpose of this Guidance Document", the generator (e.g., facility owner/operator) is responsible for determining whether his ash exhibits the TC. Ash first becomes subject to this determination at the point that it leaves the "resource recovery facility", defined as the combustion building (including connected air pollution control equipment). All handling of the ash within the building is exempt from RCRA Subtitle C regulations (see 60 FR 6666, February 3, 1995). Thus, a facility can treat the ash or combine fly ash and bottom ash within the combustion building before collecting samples outside the building for the hazardous waste determination.

Nearly every resource recovery facility is configured differently. In several instances, these facilities are not confined within a single structure enclosed by four walls. A few facilities, in fact, exist where the combustion device is not enclosed at all within a building structure. However, in WTE facilities where the ash always moves between structures in enclosed conveyors, such configurations fall within the common sense meaning of "resource recovery facility". In contrast, some facilities may collect bottom ash within the combustion building housing the combustion device and collect the fly ash outside the combustion device building in a manner that exposes that ash to the environment. In that case, RCRA Subtitle C jurisdiction begins at the two exit points from the resource recovery facility; specifically at: (1) the point where the bottom ash leaves the combustion device building, and (2) the point where the fly ash becomes exposed to the environment as it is discharged from the air pollution equipment into the containers. Thus, the generator should collect samples for a TC determination at each exit point.

In any case, should a generator determine that either bottom ash, fly ash, or combined ash is hazardous based on the TC, management of that ash must be conducted pursuant to RCRA Subtitle C. [For further information regarding the Agency's interpretation of when RCRA Subtitle C jurisdiction begins for MWC ash at waste-to-energy facilities, see 60 FR 6666, February 3, 1995 and EPA's "Revised Implementation Strategy for City of Chicago vs. EDF Municipal Waste Combustion (MWC) Supreme Court Decision" found in the public docket for this guidance (Docket No. F-95-MRIF-FFFFF.)]

The generator also is responsible for ascertaining ash variability over time and has a continuing responsibility for knowing whether the ash is hazardous at any point in time. Thus, given this responsibility for making an accurate TC determination and insuring appropriate ash management (e.g., management as a nonhazardous or hazardous waste), it is up to the generator to decide how frequently retesting or reevaluation of ash for a TC determination should be made. Generators should also consult with

their authorized States regarding any State requirements or recommendations regarding both the initial characterization and any recharacterization of their ash for the TC.

The Agency recommends retesting or reevaluation of MWC ash for the TC whenever the generator suspects that the leachability of ash for the TC contaminants may have significantly changed, e.g., such that a previous determination that the ash is nonhazardous for the TC may no longer be accurate. In determining whether to recharacterize ash, the generator should consider all facility-specific and external factors that could cause ash leachability to vary. For example, a facility may retrofit pollution control equipment by adding a scrubber acid gas removal system and a fabric filter to replace an existing electrostatic precipitator. This equipment change may significantly change the leachability of certain TC metals of concern in the combustion residue. The leachability of ash may be affected by changes in ash treatment (e.g., lime addition) or conditioning practices which occur before it is subject to a TC determination. These factors also can be used to identify which contaminants of the TC should be the analytes of concern during the retesting or reevaluation.

The sampling plan in this section is just one example of a prescriptive sample collection approach that can be used by MWC facilities, especially those that do not have the resources to develop their own plans. The Agency maintains that, where possible, generators should use Chapter Nine of SW-846, the Agency's guidance for all RCRA sampling (including TC determinations), to develop a sampling and analysis plan tailored to site-specific conditions and to meet the DQOs of the study.

Regardless of whether SW-846, this guidance, or State guidance is used, common objectives include the need to obtain representative samples which exhibit the average properties of the ash as a whole, and to make a correct determination regarding the status of the ash under RCRA. Determining whether ash passes or fails the TC requires reliable information on the leachability of the TC contaminants of concern in the ash. Several factors contribute to this reliability, including accuracy, precision, and the prevention of bias. (See Chapter Nine of SW-846 for an in-depth discussion regarding the consideration of these factors in any sampling effort.)

The approach in this guidance is designed to determine the concentration of TC contaminants in the ash leachate through the collection and analysis of fourteen (14) composite ash samples over a minimum of one-week of operation. This approach is one example of a sampling approach that might be taken by some facilities. However, it may not be appropriate for all facilities. It is largely based on the assumption that one week is an adequate sampling period for the collection of samples that are fully representative of any temporal variability in the ash. If the

above assumption is not valid or if the generator finds for any reason that the approach may compromise the collection of representative samples, then a facility-specific sampling and analysis program designed by knowledgeable personnel should instead be employed. Examples of "knowledgeable personnel" that might be involved in designing a sampling plan include the end user of the data, an experienced member of the sample collection team, an analytical chemist familiar with the analytical requirements, an engineer or other person familiar with the process, a statistician, and a quality assurance representative.

The sampling procedure is as follows:

1. Determine the most convenient location for sampling at the point the ash exits the combustion building and is subject to RCRA Subtitle C jurisdiction. For example, sampling can be conducted either from the ash conveyance device, an ash pile, or transport vehicles.

2. Obtain or construct a sampling device (trough, bucket, shovel, thief, etc.) to be used to gather a grab sample of the entire depth of the hopper, pile, or truck load, or the entire depth and width of the belt conveyor, drag chain flight, or vibrating conveyor.

3. If a conveyor is to be the sample location point, collect the entire width and depth of the conveyor at a fixed point each hour for eight (8) hours. If trucks are to be sampled, randomly select 8 trucks to sample during the eight (8) hour period. (In certain situations, where less than 8 truckloads are generated, a different schedule may be necessary, e.g., less than 1 truck per hour.) Composite all samples for the period into an eight (8) hour composite. Containerize, label, and set aside for reduction.

4. Collect a second eight (8) hour composite during the course of the work day. The second composite should be collected during a different shift from the first composite.

5. For an initial ash characterization, samples should be collected each day for a minimum of one week's operation. Two daily composite samples over the course of one week will yield a total of 14 composite samples.

6. Each composite should be mixed (a cement or other mechanical mixer is acceptable for this purpose), and then a representative subsample should be obtained from the composite. The subsample should be obtained by taking a full core or "slice" of equal proportions through the mixed composite. To reduce the size of this subsample and obtain a 1000-gram aliquot suitable for shipment to the laboratory, the sample may need to be riffled or coned and quartered. Another

acceptable procedure (for example, if riffling is difficult due to ash moisture content) is alternate shoveling, whereby the sample is divided (subsampled) using a system of alternate shoveling wherein the large composite sample is apportioned into two or more smaller piles. One of the small piles (subsamples) is then randomly chosen for analysis.

7. In accordance with the TCLP, each composite sample (e.g., the 1000-gram aliquot obtained during step 6) should be passed over a 3/8-inch (9.5 mm) screen. Materials which do not pass through the screen should be subjected to a particle size reduction step. Materials can be reduced by crushing, cutting, or grinding. A mechanical crusher can be used. Sometimes, ash contains large pieces of structurally intact material that cannot be crushed or otherwise reduced by means available to generators for sample reduction. The hammer blow test can be used to determine whether a particle is a candidate for size reduction. (Note: the hammer test is not itself a method of particle size reduction, but rather is a method of determining whether the material can be reduced.) In that test, the material is subjected to blows with a 5-pound sledge hammer dropped from one foot above the pieces. The hammer blow test should be performed on a hard surface (e.g., iron or steel plate) which will not break upon impact by the hammer and will not cause sample contamination or loss.

Particles that do not pass through the 3/8-inch screen after the particle size reduction step are discarded. It is not necessary to weigh the discarded material and, in the case of MWC ash analysis for the TC, TCLP results should not be adjusted based on the weight of discarded material.

8. Samples should be properly labelled and stored. Submit samples for analysis by the TCLP (Method 1311 of SW-846).

Once a sample has been collected, it must be stored and preserved to maintain the chemical and physical properties that it possessed at the time of collection. The sample type, type of containers and their preparation, possible forms of contamination, and preservation methods are all items which must be thoroughly examined in order to maintain the integrity of samples. SW-846 contains guidance in its chapters and methods regarding these important considerations.

For the purposes of a TC determination, the ash and ash samples should not be dried before sample reduction and analysis unless that represents the actual state of the ash at the point of Subtitle C jurisdiction. (Sample drying may be appropriate for other types of ash characterizations; in those instances, the generator should check with his State or other appropriate regulatory authority for guidance.) Also, volatile organics are not expected to be detected in ash because municipal waste

combustion facilities typically operate at temperatures higher than the boiling points of the compounds. However, should the generator have reason to believe that TC volatile organic contaminants are present in the ash, practical measures should be taken to avoid the loss of those volatile organics. Guidance regarding such measures can be found in SW-846.

III. ANALYSIS FOR THE TOXICITY CHARACTERISTIC

In order to determine whether the ash exhibits the TC by conducting analysis for the TC contaminants, the Toxicity Characteristic Leaching Procedure (TCLP, Method 1311 of SW-846) must be used pursuant to 40 CFR § 261.24(a). Use of the TCLP generates an extract (also called a leachate), which is then analyzed for the TC contaminants listed in Table 1 of 40 CFR § 261.24 (see Exhibit 1) using the appropriate determinative methods. Determinative methods for all of the TC contaminants can be found in SW-846 (see Exhibit 2). Depending on the analytes of concern and other factors, more than one aliquot of at least 100 grams from each composite sample may be needed for use in the TCLP. Process or waste knowledge can be used in lieu of testing for a TC determination regarding any of the TC constituents. This guidance assumes that the generator has elected to at least initially test for most (inorganic and organic) of the TC contaminants.

After sample preparation and selection of an extraction fluid, the TCLP consists of mixing 100 grams of sample with an acetic acid extraction fluid in a liquid-to-solid ratio of 20:1. The sample extract is then agitated end-over-end for 18 hours, after which it is filtered through a 0.7 μm filter and the filtrate is analyzed for the contaminants found in Table 1 of 40 CFR § 261.24. The analyst must follow section 8.5 of the TCLP regarding the maximum sample holding times for all stages of a TC determination.

Given the low probability of their occurrence in municipal waste combustion ash, it is recommended that, should the generator believe TC organic contaminants are present, analysis for the TC organic compounds only occur in the first one or two extracts of each sampling and analysis event (during the initial TC determination testing event and subsequently if the generator believes that the leachability of the organic contaminants of concern in the ash may have changed). It is further recommended that only if one or more TC organic compounds (semivolatile or volatile) are detected in the first extracts should the remaining extracts be analyzed for the TC organics.

Prior to analysis of the extracts using atomic absorption spectrometry (AA), inductively coupled plasma spectroscopy (ICP), gas chromatography (GC) or other appropriate determinative procedure, the extracts should be prepared using the appropriate methods (e.g., Methods 3010 and 3510, see Exhibit 2). The SW-846 manual contains several analytical techniques for trace metal determinations: ICP atomic emission spectroscopy (ICP-AES) and ICP mass spectrometry (ICP-MS), direct aspiration flame atomic absorption (FAA), graphite furnace atomic absorption (GFAA), hydride-generation atomic absorption (HGAA) and cold-vapor atomic absorption (CVAA). Each of these is briefly discussed below in terms of their advantages and disadvantages.

1. ICP's primary advantage is that it allows simultaneous or rapid sequential determinations of many elements in a short time. The primary disadvantage is interference by background radiation from other elements and the plasma gases. Although all ICP instruments use high-resolution optics and background correction to minimize these interferences, analysis for traces of metals in the presence of a large excess of a single metal is difficult. For example, analysis for trace metals in a limed (high calcium) waste might be difficult. ICP and FAA have comparable detection limits (within a factor of 4), except that ICP exhibits greater sensitivity for refractory elements (e.g., aluminum, barium). GFAA, in general, exhibits lower detection limits than does either ICP or FAA. However, all these techniques have adequate sensitivity. Detection limits are improved when ICP-MS is used. In general, ICP-MS exhibits greater sensitivity than either GFAA or FAA for most elements. The greatest disadvantage of ICP-MS is isobaric elemental interferences. Mathematical correction for interfering ions can minimize these interferences.

2. FAA determinations, as opposed to ICP determinations, are normally completed as single-element analyses and are relatively free of inter-element spectral interferences. Either a nitrous-oxide/acetylene or an air/acetylene flame is used as an energy source for dissociating the aspirated samples into the free atomic state, making analyte atoms available for absorption of light. In the analysis of some elements, the temperature or type of flame used is critical. If the proper flame and analytical conditions are not used, chemical and ionization interferences can occur.

3. GFAA replaces the flame with an electrically heated graphite furnace. This allows gradual heating of the sample in several stages. Thus, the processes of dissolution, drying, decomposition of organic and inorganic molecules and salts, and formation of atoms, which must occur in FAA or ICP in a few milliseconds, may be allowed to occur over a much longer time and at a controlled temperature in the furnace. This allows an experienced analyst to remove unwanted matrix components by using temperature programming and/or matrix modifiers. The major advantage of this technique is that it affords extremely low detection limits. It is the easiest to perform on relatively clean samples. Because this technique is so sensitive, interferences can be a real problem with complex matrices. Finding the optimum combination of digestion, heating times and temperatures requires an analyst experienced in the use of a GFAA.

4. HGAA uses chemical reduction to reduce and separate arsenic or selenium selectively from a sample digestate. The technique therefore has the advantage of being able to isolate these two elements from complex samples that may cause

interferences for other analytical procedures. However, significant interferences have been reported when any of the following is present: an easily reduced metal (copper, silver, mercury); a high concentration (>200 mg/L) of transition metals; or an oxidizing agent (oxides of nitrogen) remaining after sample digestion.

5. CVAA uses a chemical reduction to reduce mercury selectively. The procedure is extremely sensitive but is subject to interferences from some volatile organics, chlorine, and sulfur compounds.

EXHIBIT 1. LIST OF TC CONTAMINANTS AND REGULATORY LEVELS FOUND IN 40 CFR §261.24

EPA HW No.[1]	Contaminant	CAS No.[2]	Regulatory Level (mg/L)
D004	Arsenic	7440-38-2	5.0
D005	Barium	7440-39-3	100.0
D018	Benzene	71-43-2	0.5
D006	Cadmium	7440-43-9	1.0
D019	Carbon tetrachloride	56-23-5	0.5
D020	Chlordane	57-74-9	0.03
D021	Chlorobenzene	108-90-7	100.0
D022	Chloroform	67-66-3	6.0
D007	Chromium	7440-47-3	5.0
D023	o-Cresol	95-48-7	[4]200.0
D024	m-Cresol	108-39-4	[4]200.0
D025	p-Cresol	106-44-5	[4]200.0
D026	Cresol	--	[4]200.0
D016	2,4-D	94-75-7	10.0
D027	1,4-Dichlorobenzene	106-46-7	7.5
D028	1,2-Dichloroethane	107-06-2	0.5
D029	1,1-Dichloroethylene	75-35-4	0.7
D030	2,4-Dinitrotoluene	121-14-2	[3]0.13
D012	Endrin	72-20-8	0.02
D031	Heptachlor (and its epoxide)	76-44-8	0.008
D032	Hexachlorobenzene	118-74-1	[3]0.13
D033	Hexachlorobutadiene	87-68-3	0.5
D034	Hexachloroethane	67-72-1	3.0
D008	Lead	7439-92-1	5.0
D013	Lindane	58-89-9	0.4
D009	Mercury	7439-97-6	0.2
D014	Methoxychlor	72-43-5	10.0
D035	Methyl ethyl ketone	78-93-3	200.0
D036	Nitrobenzene	98-95-3	2.0
D037	Pentachlorophenol	87-86-5	100.0
D038	Pyridine	110-86-1	[3]5.0
D010	Selenium	7782-49-2	1.0
D011	Silver	7440-22-4	5.0
D039	Tetrachloroethylene	127-18-4	0.7
D015	Toxaphene	8001-35-2	0.5
D040	Trichloroethylene	79-01-6	0.5
D041	2,4,5-Trichlorophenol	95-95-4	400.0
D042	2,4,6-Trichlorophenol	88-06-2	2.0
D017	2,4,5-TP (Silvex)	93-72-1	1.0
D043	Vinyl chloride	75-01-4	0.2

[1] Hazardous waste number.
[2] Chemical abstracts service number.
[3] Quantitation limit is greater than the calculated regulatory level. The quantitation limit therefore becomes the regulatory level.
[4] If o-, m-, and p-Cresol concentrations cannot be differentiated, the total cresol (D026) concentration is used. The regulatory level of total cresol is 200 mg/l.

EXHIBIT 2. SW-846 METHODS OF ANALYSIS FOR TCLP EXTRACTS

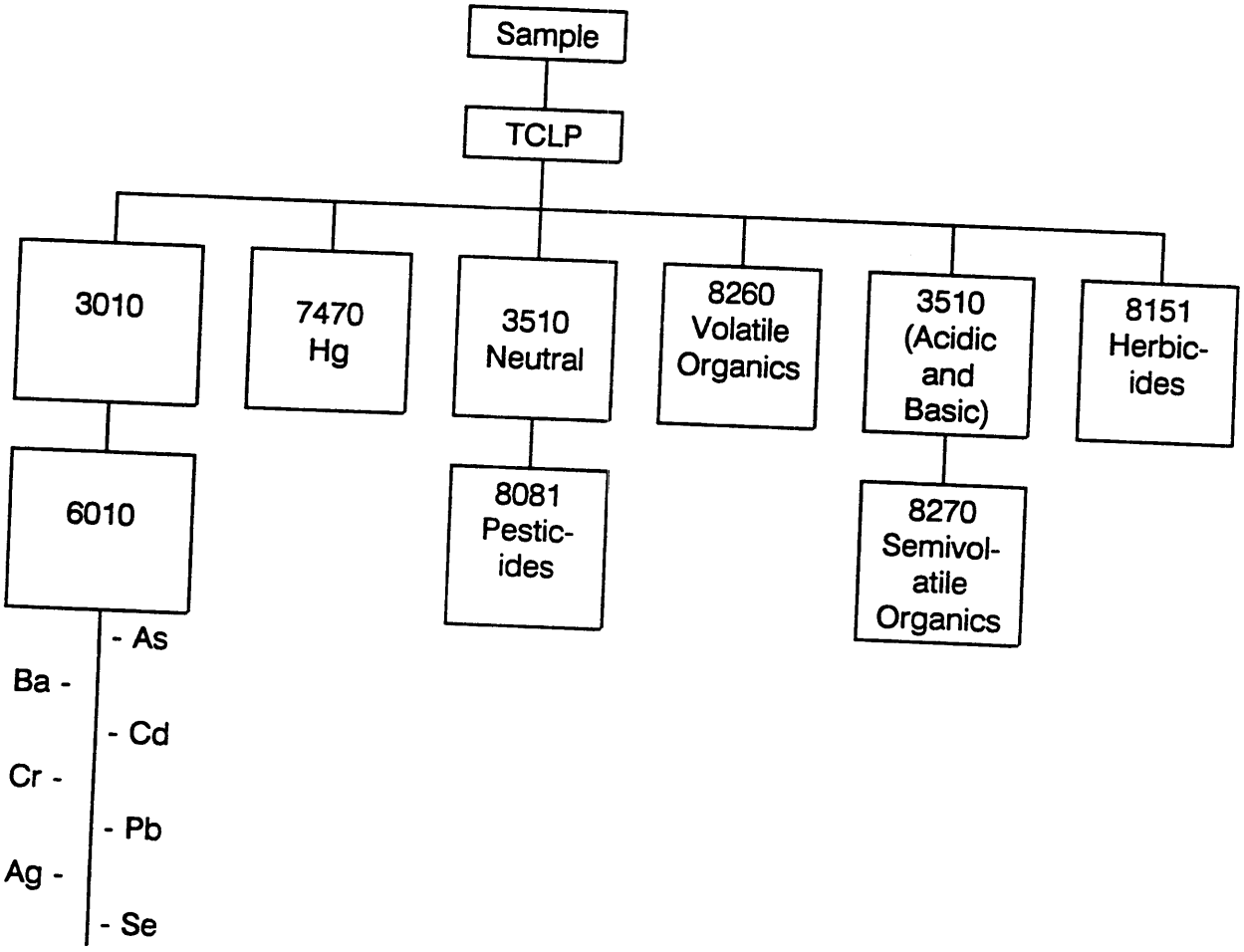

IV. QUALITY ASSURANCE AND QUALITY CONTROL

To ensure that the analytical data used for the TC determination are of known and desired quality, all activities associated with sampling and analysis should be conducted under strict quality assurance and quality control (QA/QC) procedures.

Prior to initiating a sampling and analysis program, generators should prepare a detailed quality assurance project plan (QAPjP) describing the QA/QC steps and controls to be followed. In addition, a person knowledgeable regarding the QA/QC procedures should oversee the sampling and analysis effort to insure that all QAPjP procedures are followed. For more information on preparing and implementing quality assurance programs, see Chapter One of SW-846.

In addition, the appropriate use of data generated under the great range of analytical conditions encountered in waste characterization requires reliance on the quality control practices incorporated into the various testing methods. The Agency has, in many cases, issued approved methods for sampling and analysis operations that are intended to fulfill regulatory requirements. However, the mere use of approved methods does not guarantee accurate results. Inaccuracies can result from many causes, including unanticipated matrix effects, equipment malfunctions, and operator error. Therefore, the quality control component of each method is indispensable. The TCLP and the determinative methods of SW-846 contain method-specific quality assurance procedures that should be followed during a TC determination. All of the QA procedures found in section 8.0 of the TCLP must be followed during the determination.

V. TCLP DATA EVALUATION

To evaluate the analytical data and determine whether the ash exhibits the TC, the data evaluation approach below can be followed. For the statistical formulas and equations (e.g., "equation 2a", "equations 3a and 4", etc.), refer to Exhibit 3. Exhibit 4 contains tabulated values of Student's t distribution.

1. Determine the mean TC concentration ($\bar{X}$) of the fourteen eight-hour composite samples for each regulated analyte (equation 2a).

2. Determine the standard deviation (s) of the data employed to calculate the mean (i.e., the individual composite extract results) (equations 3a and 4).

3. Determine the upper limit of a two-sided 80 percent confidence interval, which is equivalent to a 90 percent (one-sided) confidence interval, for the mean for each analyte (equation 6). (Note: Exhibit 3 does not include equations for arcsine or square root transformations. The Agency is currently revising Chapter Nine of SW-846 whereby arcsine and square root transformation discussions are being considered for removal from the chapter. Transformations should only be used if the data distribution and valid statistical practices indicate such transformations are warranted. If transformations are used, methods for obtaining unbiased estimates of the mean and confidence limits should be employed.)

4. If the 80 percent upper confidence limit is less than the applicable regulatory threshold for all analytes listed in 40 CFR § 261.24, then the waste (ash) passes the TC. If the 80 percent upper confidence limit is greater than or equal to the applicable regulatory threshold for any contaminant listed in Table 1 of 40 CFR § 261.24, then the waste (ash) fails the TC and is a hazardous waste.

Results from multiple events may be combined for evaluation under certain limited conditions. Data sets representing two or more sampling events can be combined (pooled) into one data set, and a new confidence interval calculated, only if all of the following conditions apply:

- Sampling data are for the same waste (e.g., for the bottom ash and not for any other waste or ash type generated by the facility).

- Field sampling and laboratory analysis procedures were the same for all sampling and analysis events (e.g., the data are from use of the TCLP and the same procedures

were followed by the laboratory during testing, including the same preparative and determinative methods).

- There are no other reasons to believe that the waste and sampling events were different (e.g., the ash has not changed over time or space due to changes in pollution control equipment).

If there is some doubt whether the two data sets can be combined, statistical tests are available for testing the assumption that the samples were drawn from identical populations. For example, the "t" test methods to compare population means can be used if the underlying populations have normal distributions, and the Wilcoxon Rank Sum Test (also known as the Mann-Whitney U Test) can be used to test whether the two populations are identical but not normal. Generators should seek assistance from a statistician prior to combining results from multiple sampling events.

Regarding the treatment of "non-detects", a number of approaches are available and the appropriate treatment will depend on characteristics of the data (e.g., what percentage of the data is reported as less than the detection limit). Some of these approaches are described in references 2, 3, and 4 listed in section VI of this manual. Generators should consult their appropriate authorized State or, if in an unauthorized State, their EPA Regional Offices regarding the evaluation of data sets which include values reported as less than the analyte detection limit.

Regarding identification and handling of "outliers", testing for outliers should be done only if an observation seems particularly high or low compared to the rest of the data set. If an outlier is identified, the result should not be treated as such until a specific reason for the abnormal measurement can be determined. Valid reasons may, for example, include:

- Contaminated sampling equipment.
- Laboratory contamination of the sample.
- Errors in transcription of the data values.

Once a specific reason is documented, the result should be excluded from any further statistical analysis. If a plausible reason cannot be found, the observation should be treated as a true, but extreme value, and <u>not</u> be excluded from the data evaluation.

EXHIBIT 3. BASIC STATISTICAL TERMINOLOGY APPLICABLE TO SAMPLING PLANS FOR SOLID WASTES

Terminology	Symbol	Mathematical Equation	(Equation)
• Variable (e.g., barium or endrin)	x	--	
• Individual measurement of variable	x_i	--	
• Mean of possible measurements of variable (population mean)	μ	$\mu = \frac{\sum_{i=1}^{N} x_i}{N}$, with N = number of possible measurements	(1)
• Mean of measurements generated by sample (sample mean)	$\bar{x}$	<u>Simple random sampling and systematic random sampling</u>	
		$\bar{x} = \frac{\sum_{i=1}^{n} x_i}{n}$, with N = number of sample measurements	(2a)
		<u>Stratified random sampling</u>	
		$\bar{x} = \sum_{k=1}^{r} W_k \bar{x}_k$, with $\bar{x}_k$ = stratum mean and W_k = fraction of population represented by Stratum k (number of strata [k] range from 1 to r)	(2b)
• Variance of sample	s^2	<u>Simple random sampling and systematic random sampling</u>	
		$s^2 = \frac{\sum_{i=1}^{n} x_i^2 - (\sum_{i=1}^{n} x_i)^2/n}{n-1}$	(3a)
		<u>Stratified random sampling</u>	
		$s^2 = \sum_{k=1}^{r} W_k s_k^2$, with s^2_k = stratum variance and W_k = fraction of population represented by Stratum k (number of strata [k] ranges from 1 to r)	(3b)

(Source: Adoption of Table 9-1 of Chapter Nine, SW-846, Third Edition as Amended by Updates I, II, IIA, and IIB)

EXHIBIT 3. BASIC STATISTICAL TERMINOLOGY APPLICABLE TO SAMPLING PLANS FOR SOLID WASTES (Continued)

Terminology	Symbol	Mathematical Equation	(Equation)
• Standard deviation of sample	s	$s = \sqrt{s^2}$	(4)
• Standard error (also standard error of mean and standard deviation of mean) of sample	$s_{\bar{x}}$	$s_{\bar{x}} = \frac{s}{\sqrt{n}}$	(5)
• Confidence interval for μ*	CI	$CI = \bar{x} \pm t_{.20}\, s_{\bar{x}}$, with $t_{.20}$ obtained from Exhibit 4 for appropriate degrees of freedom	(6)
• Regulatory threshold*	RT	Defined by EPA	(7)
• Appropriate number of samples to collect from a solid waste (financial constraints not considered)	n	$n = \frac{t^2_{.20}\, s^2}{\Delta^2}$ with Δ = RT - $\bar{x}$	(8)
• Degrees of freedom	df	df = n - 1	(9)

* The upper limit of the CI for μ is compared with the applicable regulatory threshold (RT) to determine if a solid waste contains the variable (chemical contaminant) of concern at a hazardous level. The contaminant of concern is not considered to be present in the waste at a hazardous level if the upper limit of the CI is less than the applicable RT. Otherwise, the opposite conclusion is reached.

(Source: Adoption of Table 9-1 of Chapter Nine, SW-846, Third Edition as Amended by Updates I, II, IIA, and IIB)

EXHIBIT 4. TABULATED VALUES OF STUDENT'S "t" FOR EVALUATING SOLID WASTES

Degrees of freedom (n-1)[a]	Tabulated "t" value[b]
1	3.078
2	1.886
3	1.638
4	1.533
5	1.476
6	1.440
7	1.415
8	1.397
9	1.393
10	1.372
11	1.363
12	1.356
13	1.350
14	1.345
15	1.341
16	1.337
17	1.333
18	1.330
19	1.328
20	1.325
21	1.323
22	1.321
23	1.319
24	1.318
25	1.316
26	1.315
27	1.314
28	1.313
29	1.311
30	1.310
40	1.303
60	1.296
120	1.289
	1.282

[a]Degrees of freedom (df) are equal to the number of samples (n) collected from a solid waste less one.

[b]Tabulated "t" values are for a two-tailed confidence interval and a probability of 0.20 (the same values are applicable to a one-tailed confidence interval and a probability of 0.10).

(Source: Adoption of Table 9-2 of Chapter Nine, SW-846, Third Edition, as Amended by Updates I, II, IIA, and IIB)

VI. REFERENCES

The references listed below represent resources that may be helpful during the development of a QAPjP and a sampling and analysis plan. The TCLP, preparative and determinative methods for analysis of the TCLP extract, and Agency guidance regarding quality assurance/quality control, the development of sampling and analysis plans, and data evaluation can all be found in reference number 1 (SW-846). The other listed references provide information regarding statistical evaluations of data that may prove useful during a TC determination.

1. USEPA, Test Methods for Evaluating Solid Waste, Physical/Chemical Methods (SW-846), Third Edition as amended by Updates I, II, IIA, and IIB, Washington, DC.

2. USEPA, 1989, Statistical Analysis of Ground Water Monitoring Data at RCRA Facilities, Interim Final Guidance and Draft Addendum to Interim Final Guidance (July, 1992). EPA Office of Solid Waste, Washington, DC.

3. Gilbert, R.O., 1987, Statistical Methods for Environmental Pollution Monitoring, New York: Van Nostrand Reinhold, 320 pp.

4. Helsel, D.R., 1990, "Less Than Obvious, Statistical Treatment of Data Below the Detection Limit", in Environ. Sci. Technol, 24(12): 1766-1774.

APPENDIX:
DEFINITIONS OF TERMS USED IN THE GUIDANCE

Accuracy: The closeness of agreement between an observed value and a true or accepted reference value.

Bottom Ash: Coarse, relatively dense (40-70 lbs/ft^3 dry) solid material that remains on a hearth or falls off the furnace grate after thermal processing is complete.

Composite sampling: Sample collection whereby a number of random samples are initially collected from a waste and then combined into a single sample, which is then analyzed for the contaminants of concern. Composite samples are composed of several distinct subsamples (or grab samples), and are often collected when it is not economically feasible to analyze a large number of individual samples.

Confidence interval: The numerical interval constructed around a point estimate of a population parameter, combined with a probability statement (the confidence coefficient) linking the interval to the population's true parameter value.

Data Quality Objectives: Qualitative and quantitative statements about the data and of the overall level of uncertainty that a decision-maker is willing to accept in results derived from data. DQOs should take into account both sampling considerations and analytical protocols.

Detection limit: The lowest concentration or amount of a target analyte that can be determined by a single measurement to be different from zero or background level at a defined level of probability. The detection limit is generally recognized to be sample matrix and measurement method dependent.

Disposal: The discharge, deposit, injection, dumping, spilling, leaking, or placing of any solid or hazardous waste into or on any land or water.

EPA Hazardous Waste No.: The number assigned by EPA to each hazardous waste listed in part 261, subpart D of 40 CFR and to each characteristic identified in part 261, subpart C of 40 CFR.

EPA Region: The states and territories found in any one of ten regions identified by EPA.

Fly Ash: Light (usually less than 20 lbs/ft^3 dry weight basis) flue gas-entrainable particle material carried off the furnace grate during combustion by the updrafting of underfire air. Depending on the facility design, these flue gas entrained particles, volatilized elements/compounds, and gaseous fractions will be partially collected in post combustion fly ash hoppers

mostly in solid particle form, with some smaller gaseous fractions entrapped in gaseous form.

Generator: Any person, by site, whose act or process produces waste.

Hazardous Waste: A solid waste, as defined in 40 CFR § 261.2 that (1) is not excluded from regulation as a hazardous waste under 40 CFR § 261.4(b), and (2) meets any of the criteria under 40 CFR § 261.3(2) (e.g., exhibits one of the characteristics of a hazardous wastes or is listed as a hazardous waste). A hazardous waste is a material that poses a substantial present or potential hazard to human health or living organisms due to its lethal, non-degradable or persistent nature or because it may cause or tend to cause detrimental cumulative effects.

Heterogeneous: Consisting of dissimilar or diverse ingredients or constituents.

Homogeneous: Of uniform structure or composition throughout.

Management or Waste Management: The systematic control of the collection, source separation, storage, transportation, processing, treatment, recovery, and disposal of waste.

Operator: The person responsible for the overall operation of a facility.

Owner: The person who owns a facility or part of a facility.

Pile: Any non-containerized accumulation of solid, nonflowing waste that is used for treatment or storage.

Precision: The agreement among a set of replicate measurements without assumption or knowledge of the true value. Precision is estimated by means of duplicate or replicate analyses.

Project: Single or multiple data collection activities that are related through the same planning sequence.

Quality Assurance: The process for ensuring that all data and the decisions based on these data are technically sound, statistically valid, and properly documented.

Quality Assurance Project Plan: An orderly assemblage of detailed procedures designed to produce data of sufficient quality to meet the data quality objectives for a specific data collection activity.

Quality Control: Procedures employed to measure the degree to which the quality assurance objectives are met.

Representative Sample: A sample of a universe or whole which (1) has the properties and chemical composition of the population from

which it was collected, and (2) has them in the same average proportions found in the universe or whole.

Solid Waste: Any discarded material that is not excluded by 40 CFR § 261.4(a) or that is not excluded by a variance granted under 40 CFR §§ 260.30 and 260.31, and as defined by 40 CFR § 261.2.

Storage: The holding of waste for a temporary period, at the end of which the waste is treated, disposed of, or stored elsewhere.

Transport Vehicle: A motor vehicle or rail car used for the transportation of cargo (including waste) by any mode. Each cargo-carrying body (trailer, freight car, etc.) is a separate transport vehicle.

Treatment: Any method, technique, or process, including neutralization, designed to change the physical, chemical, or biological character or composition of any waste, or so as to recover energy or material resources from the waste, or so as to render such waste non-hazardous or less hazardous; safer to transport, store, or dispose of; or amenable for recovery, amenable for storage, or reduced in volume.