EPA/540/A5-89/010
June 1989

Shirco Infrared Incineration System

Applications Analysis Report

Risk Reduction Engineering Laboratory
Office of Research and Development
U.S. Environmental Protection Agency
Cincinnati, OHIO 45268

Notice

The information in this document has been funded by the U.S. Environmental Protection Agency under Contract No. 68-03-3255 and the Superfund Innovative Technology Evaluation (SITE) Program. It has been subjected to the Agency's peer review and administrative review and it has been approved for publication as a USEPA document. Mention of trade names or commercial products does not constitute an endorsement or recommendation for use.

Foreword

The Superfund Innovative Technology Evaluation (SITE) program was authorized in the 1986 Superfund amendments. The program is a joint effort between EPA's Office of Research and Development and Office of Solid Waste and Emergency Response. The purpose of the program is to assist the development of hazardous-waste treatment technologies necessary to implement new cleanup standards which require greater reliance on permanent remedies. This is accomplished through technology demonstrations designed to provide engineering and cost data on selected technologies.

This project consists of an analysis of the Shirco Infrared Thermal Destruction System and represents the first and third field demonstrations in the SITE program. The first technology demonstration took place during the operation of a transportable Shirco system during an emergency cleanup at a former waste-oil rerefining-facility designated as the Peak Oil Superfund site in Brandon, Florida. The other technology demonstration occurred during the operation of a pilot-scale Shirco system at an abandoned waste site, the Demode Road Superfund site in Rose Township, Michigan. The demonstration efforts were directed at obtaining information on the performance and cost of the transportable and pilot-scale systems for use in assessments at other sites. Documentation will consist of three reports. Two Technology Evaluation Reports describing the field activities and laboratory results of each demonstration have been previously issued. This Applications Analysis Report provides an interpretation of the data and presents overall conclusions on the results and potential applicability of the technology.

Additional copies of this report may be obtained at no charge from EPA's Center for Environmental Research Information, 26 West Martin Luther King Drive, Cincinnati, Ohio, 45268, using the EPA document number found on the report's front cover. Once this supply is exhausted, copies can be purchased from the National Technical Information Service, Ravensworth Bldg., Springfield, VA, 22161, 703-487-4600. Reference copies will be available at EPA libraries in their Hazardous Waste Collection. You can also call the SITE Clearinghouse hotline at 1-800-424-9346 or 202-382-3000 in Washington, D.C. to inquire about the availability of other reports.

Margaret M. Kelly, Director
Technology Staff,Office
ofProgram Management and
Technology

Alfred W. Lindsey, Acting
Director, Office of
Engineering and Technology
Demonstration

Abstract

This document is an evaluation of the Shirco infrared thermal destruction technology and its applicability as an onsite treatment method for waste site cleanup.

A demonstration was conducted at the Peak Oil Superfund site in Brandon, FL in Aug. 1987 during a removal action employing a commercial-scale transportable unit. A second demonstration was conducted at the Demode Road Superfund site in Rose Township, MI in Nov. 1987 using the pilot-scale unit. Operational data and sampling and analysis information were carefully monitored and controlled to establish a database against which other available data and the vendor's claims for the technology could be compared and evaluated. Conclusions were reached concerning the technology's suitability for use in cleanup of the types of materials found at the test site, and extrapolations were made to cleanups of other materials.

Other operations using the Shirco technology range from pilot-scale tests to obtain TSCA permits and evaluate technology effectiveness to commercial incineration of thousands of tons of PCB-contaminated soil.

The conclusions drawn from the test results and other available data are that: (1) the commercial unit is a viable transportable thermal-system consisting of 5 main component trailers and other auxiliary facilities; (2) the unit operation is sensitive to the physical and chemical characteristics of the waste feed and requires a relatively dry soil-like material with a particle sized between 5 micron and 2 in.; (3) the process can thermally decontaminate feed and destroy organic contaminants and, in general, meet applicable
incineration performance standards; (4) the process cannot reduce the mobility of heavy metals, thus requiring further furnace ash processing, if applicable; and (5) the unit is an attractive economical alternative to other established transportable thermal- treatment systems and technologies.

Contents

	Page
Foreword	iii
Abstract	iv
Figures	vi
Tables	vii
Abbreviations and Symbols	x
Conversions	xiii
Acknowledgment	xiv
1.Executive Summary	1
2.Introduction	7
The SITE program	7
SITE program reports	7
Key contacts	8
3.Technology Applications Analysis	9
Introduction	9
Conclusions	9
Evaluation of technology performance	11
Environmental regulations and comparison with Shirco performance	17
Waste characteristics and their impact on the performance of the technology	21
Ranges of site characteristics suitable for the technology	24
Material handling required by the demonstrated technology	25
Personnel issues	28
Tests to evaluate application and performance of technology	28
4.Economic Analysis	31
Introduction	31
Results of economic analysis	31
Basis of economic analysis	33
References	36
Appendices	
A. Process description	39
B. Vendor's claims for the technology	43
C. SITE demonstration results	51
D. Case studies	65
References for Appendices	119

Figures

Number		Page
A-1	Systems process flow and overall test site layout — Peak Oil	40
A-2	System process flow for the pilot-scale unit	41
B-1	Shirco thermal treatment costs - 9x61-ft transportable (commercial) unit	49

Tables

Number		Page
1	SITE demonstration: Comparison of results to environmental standards	19
2	Applicable range of waste characteristics	21
3	Estimated costs in $/ton: Site cleanup cost-element breakdown	32
4	Summary of estimated costs	33
A-1	Transportable Shirco unit design parameters	42
B-1	Waste characteristics - General	44
B-2	Economic model for Shirco transportable (commercial) unit	46
C-1.1	SITE demonstration: Summary of test results	55
C-2.1	Operations summary	60
C-2.2	SITE demonstration: Summary of test results	61
D-1.1	Operating parameters	66
D-1.2	Demonstration Test summary	67
D-1.3	Waste characterization of drummed soils	68
D-1.4	Concentration of PCBs in waste feed	69
D-1.5	Particulate emissions	69
D-1.6	HCl emissions	69
D-1.7	Total organic halogens	69
D-1.8	Continuous monitoring emission results	70
D-1.9	Concentration of PCBs in flue gas samples	71
D-1.10	Destruction and removal efficiency of PCBs	71
D-2.1	Operating parameters for the 1987 test runs	74
D-2.2	Operating parameters for the 1988 diagnostic runs	75
D-2.3	Operating parameters for the 1988 test runs	75
D-2.4	Feed characteristics and DRE for the 1987 tests	75
D-2.5	Feed characteristics and DRE for the 1988 tests	76
D-2.6	Furnace ash analysis for the 1987 tests	77
D-2.7	Furnace ash analysis for the 1988 tests	77
D-2.8	Stack emissions data for the 1987 tests	79
D-2.9	Stack emissions data for the 1988 tests	79
D-2.10	Scrubber water data for the 1987 tests	80

Tables (continued)

Number		Page
D-2.11	Scrubber water data for the 1988 tests	80
D-5.1	Operational data for the Jan. 1987 tests	88
D-5.2	Operational data for the May 1987 tests	88
D-5.3	Demonstration Test results summary	90
D-5.4	Dioxins and furans in furnace ash - Jan. 1987 tests	91
D-5.5	Dioxins and furans in furnace ash and scrubber water - May	91
D-5.6	PCB DRE for the Jan. 1987 test	92
D-5.7	PCB DRE for the May 1987 tests	92
D-5.8	Dioxin and furans in stack emissions - Jan. 1987 tests	92
D-5.9	Dioxin and furans in stack emissions - May 1987 tests	92
D-5.10	Stack emissions - Jan. tests	92
D-5.11	Stack emissions - May tests	92
D-5.12	Scrubber water PCB levels	92
D-5.13	Dioxins and furans in scrubber water - Jan. 1987 tests	93
D-6.1	Brio site process conditions	96
D-6.2	Typical contaminants in Brio site feed material	97
D-6.3	Weight and volume reduction of waste feed materials	97
D-6.4	Brio site stack-gas analyses	98
D-6.5	Destruction and removal efficiency of CCl_4	99
D-6.6	Onsite mobile incineration service - Estimated economic model	98
D-7.1	Operation summary	102
D-7.2	PCB concentrations in waste feed	102
D-7.3	PCDD/PCDF concentrations in waste feed	103
D-7.4	Concentrations of PCBs in furnace ash	103
D-7.5	Concentrations of PCDD/PCDF in furnace ash	103
D-7.6	Concentrations of PCBs in stack gas	103
D-7.7	Concentrations of PCDD/PCDF in stack gas	104
D-7.8	Destruction and removal efficiency of PCBs and PCDDs/PCDFs	104
D-7.9	Stack gas composition	105
D-7.10	PCDF/PCDD concentrations in scrubber effluent	105

Tables (continued)

Number		Page
D-8.1	Thermal process test data summary	109
D-8.2	Test results summary	110
D-8.3	Pretest waste analysis data	110
D-8.4	Waste feed analysis	111
D-8.5	Flue gas destruction and removal efficiencies	112
D-9.1	Summary of results	114
D-10.1	Simulated creosote feed analysis	115
D-10.2	Simulated creosote waste incineration operating conditions	115
D-10.3	Furnace ash analysis	116
D-10.4	Destruction and removal efficiencies	117

Abbreviations and Symbols

ACL	alternate concentration limit
acm	actual cubic meters
afp	mactual feet per minute
ATSDR	Agency for Toxic Substances and Disease Registry
APC	air pollution control
ARARs	applicable or relevant and appropriate requirements
BACT	Best available control technology
Br	bromine
Btu	british thermal unit
C	carbon
CAA	Clean Air Amendments
cc	cubic centimeter
CERCLA	Comprehensive Environmental Response, Compensation, and Liability Act
CCl_4	carbon tetrachloride
CE	combustion efficiency
CEM	continuous emission monitor
CFR	Code of Federal Regulations
Cl	chlorine
CO	carbon monoxide
CO_2	carbon dioxide
CWA	Clean Water Act
DE	decontamination efficiency
DOHS	Department of Health Services
DRE	destruction and removal efficiency
dscf	dry standard cubic feet
dscfm	dry standard cubic feet per minute
dscm	dry standard cubic meters
dscmm	dry standard cubic meters per minute
EC	environment control
EDR	equivalent daily rate
EPA	Environmental Protection Agency
EP Tox	EP Toxicity Test Procedure
F	fluorine
FRP	fiberglass reinforced plastic
ft	feet
FWQC	federal water quality criteria
g	grams
gal	gallons
GC/MS	gas chromatography/ mass spectrometry
gr	grains
GRAV	gravimetric
gpm	gallons per minute
H	hydrogen
H_2O	water
HCl	hydrogen chloride
HHV	high heating value
h	hour
I	iodine
ID	induced draft
IEPA	Illinois Environmental Protection Agency

Abbreviations and Symbols
(continued)

in.	inches
K	potassium
kg	kilograms
kVA	kilovolt ampere
kW	kilowatts
kWh	kilowatt hour
L	liters
LAER	lowest achievable emission rate
lb	pound
LEU	LaSalle Electric Utilities
M	million
m	meters
MCLG	maximum contaminant level goal
MDNR	Michigan Department of Natural Resources
mg	milligrams
min	minutes
mL	milliliters
MM5	Modified Method 5
mo	month
ug	micrograms
N_2	nitrogen
Na	sodium
NAAQS	National Ambient Air Quality Standards
NBS	National Bureau of Standards
NCP	National Contingency Plan
ND	not detected
ng	nanograms
NOx	nitrogen oxide
NPDES	National Pollutant Discharge Elimination System
NPL	National Priorities List
NSR	New Source Review
OHM	OH Materials Corporation
ORD	Office of Research and Development
OSHA	Occupational Safety and Health Act
OSWER	Office of Solid Waste and Emergency Response
O_2	oxygen
P	phosphorous
PAH	polynuclear aromatic hydrocarbon
Pb	lead
PCBs	polychlorinated biphenyls
PCC	primary combustion chamber
PCDD	polychlorinated dibenzo-p-dioxin
PCDF	polychlorinated dibenzofurans
PCP	pentachlorophenol
pH	a measure of acidity or alkalinity
PIC	product of incomplete combustion
PL	public law
POHC	principal organic hazardous constituent
POTW	publicly owned treatment works
PP	priority pollutant

Abbreviations and Symbols
(continued)

ppb	parts per billion
ppm (v)	parts per million (volume)
ppt	parts per trillion
PSD	prevention of significant deterioration
psi	pounds per square inch
%	percent
QA/QC	quality assurance/quality control
RACT	reasonably available control technology
RCRA	Resource Conservation and Recovery Act
RI/FS	Remedial Investigation/ Feasibility Study
ROD	Record of Decision
RPM	revolutions per minute
RREL	Risk Reduction Engineering Laboratory
S	sulfur
S&A	sampling and analysis
SARA	Superfund Amendments and Reauthorization Act
SASS	Source Assessment Sampling System
SCAQMD	South Coast Air Quality Management District
SCC	secondary combustion chamber
SCFH	standard cubic feet per hour
SCFM	standard cubic feet per minute
s	seconds
SITE	Superfund Innovative Technology Evaluation
SO_2	sulfur dioxide
SPCCSpill	Prevention, Control, and Countermeasure Plan
ft^2	square feet
SV	semivolatile
TAT	Technical Assistance Team
TCDD	tetrachlorodibenzo-p-dioxin
TCDF	tetrachlorodibenzofuran
TCLP	Toxicity Characteristic Leaching Procedure
TCO	total chromotographable organics
TDS	total dissolved solids
TGA	thermogravimetric analyses
THC	total hydrocarbons
TOC	total organic carbon
tpd	tons per day
TSCA	Toxic Substances Control Act
TSS	total suspended solids
UHC	unburned hydrocarbon
v	volume
V	volt
VOA	volatile organic analysis
VOST	volatile organic sampling train
WC	water column
WHI	Westinghouse/Haztech, Inc.
wt	weight
<	less than
>	greater than

Conversions

To convert from	to	Multiply by
Btu/lb	J/g	2.326 E+00
ft^3	m^3	2.832 E-02
yd^3	m^3	7.646 E-01
ft	m	3.048 E-01
°F	°C	$t_C = (t_F-32)/1.8$
gal	m^3	3.785 E-03
hp	kW	7.46 E-01
lb	kg	4.535 E-01
Btu/h	J/h	1.055 E+03

Acknowledgment

This report was prepared under the direction and coordination of Howard Wall, EPA SITE Program Manager in the Risk Reduction Engineering Laboratory, Cincinnati, Ohio. Contributors and reviewers for this report were Dick Valentinetti, John Kingscott, and Linda Galer of USEPA, Washington, DC; Stephen James, Robert Olexsey, and Ronald D. Hill of USEPA, RREL, Cincinnati, Ohio; and Mike Hill of ECOVA Corp., Dallas, Texas.

This report was prepared for EPA's Superfund Innovative Technology Evaluation (SITE) Program by Seymour Rosenthal of Foster Wheeler Enviresponse, Inc. for the U.S. Environmental Protection Agency under Contract no. 68-03-3255.

SECTION 1

EXECUTIVE SUMMARY

Introduction

The Shirco infrared thermal destruction system was tested and evaluated under the Superfund Innovative Technology Evaluation (SITE) Program. The Shirco thermal destruction technology is similar to other conventional incineration processes in many respects. Like other systems such as a rotary kiln, the Shirco unit utilizes staged combustion where the organics are driven out of the soil in a primary combustion chamber and then combusted in a secondary chamber. The major difference is that the Shirco unit uses an electric-powered infrared heat-source in the primary chamber instead of fossil fuels. This feature results in a lower gas flow from the primary combustion chamber, and a subsequently smaller secondary combustion chamber (SCC) with lower fuel use and a smaller emissions-control system. Particulate emissions are also reduced because the soil is processed virtually undisturbed on the primary combustion chamber-conveyor (PCC) belt.

Shirco technology demonstrations under the SITE program were conducted at the Peak Oil Superfund site in Brandon, Fla. in Aug. 1987 [1] during a removal action employing a commercial unit and at the Demode Road Superfund site in Rose Township, Mich. in Nov. 1987 [2] using a pilot-scale unit. The major objectives of these demonstrations were to determine the following:

- Characteristics of the site and the waste feed.
- DRE levels for PCBs, and the presence of PICs in the stack gas. The applicable regulatory standard for PCBs is 99.9999% DRE under the Toxic Substances and Control Act (TSCA). In contrast the regulatory standard for DRE under the Resource Conservation and Recovery Act (RCRA) is 99.99% for other POHCs and 99.9999% for dioxins and furans.
- Level of hydrogen chloride (HCl) and particulates (including heavy metals concentrations) in the stack gas. The RCRA standard for HCl in the stack gas is the larger of 1.8 kg/h (4 lb/h) or 99 wt% HCl removal efficiency.

The RCRA standard for particulate emissions in the stack gas is 180 mg/dscm (0.08 gr/dscf).

- Level of residual heavy metals, organics, and PCBs in the furnace ash. The TSCA guidance level is 2 ppm of residual PCBs in the furnace ash.
- Mobility of heavy metals in the furnace ash as measured by the Extraction Procedure Toxicity (EP Tox) and the proposed Toxicity Characteristic Leaching Procedure (TCLP) tests.
- Mobility of heavy metals, particularly lead, in the furnace ash as compared to the feed.
- Level of residual heavy metals, organic compounds, and other physical and chemical characteristics in the scrubber water discharged from the unit.
- Overall reliability of the unit during operation.
- Effect of varying operating conditions on unit performance and energy consumption.
- Costs for commercial applications.

In addition to the SITE demonstrations at the Peak Oil and Demode Road sites, information is available on the Shirco technology performance from the pilot-scale and commercial soil incinerations performed by different organizations (Appendix D). These range from the conduct of pilot-scale tests to obtain TSCA permits, to incineration of thousands of tons of PCB-contaminated soil. This information was reviewed and used to supplement the SITE demonstration data in evaluating the Shirco technology against the objectives listed above. After the initiation of the SITE Program, Shirco Infrared Systems, Inc. filed for bankruptcy, and ECOVA Corp. of Redmond, Washington, purchased a license from Shirco Infrared Systems, Inc. to construct 2 commercial and 2 pilot-scale units. ECOVA intends to construct, own, and operate

the infrared thermal destruction systems as part of their overall remediation capabilities. Other licenses are available.

Conclusions

The conclusions drawn from reviewing the data on the Shirco process, both from the SITE demonstrations, where the most extensive results were obtained, and the literature, in relation to SITE Program objectives, are:

- The commercial and pilot-scale units are designed for transport to remote sites and to be self-contained and stand-alone units. In all cases there was sufficient plot area to accommodate the units; required site improvements, facilities upgrading and utility connections were completed without significant problems.

- The Shirco commercial unit is designed to process wastes over a specific range of physical and chemical characteristics, including morphology, particle size, rheology, moisture content, density, heating value, pH, and organic and inorganic compounds including metals. Based on the results, preoperations testing and analysis is critical to identify the characteristics and conditions that will contribute to operating difficulties. In general, a dry soil-like material that is 5 microns to 2 in. in size is an ideal waste feed to the Shirco unit. Unit conditions can be adjusted to accommodate other physical and chemical characteristics.

- The Shirco process can thermally destroy organic contaminants in the waste feed and meet the applicable RCRA DRE performance standard of 99.99% and TSCA DRE performance standard of 99.9999%. Volatile and semivolatile organic compounds measured in the stack gas are possible PICs and include halomethanes and chlorinated organics, aromatic volatiles and semivolatiles, and oxygenated hydrocarbons. These compounds were detected at levels significantly lower than established standards for their direct inhalation [23].

- The RCRA performance standard for acid gas removal, which is the larger of 1.8 kg/h HCl in the stack gas or 99 wt% HCl removal efficiency, was met during the operation of the commercial and pilot-scale units. In general, the RCRA performance standard for particulate emissions of 180 mg/dscm (0.0 8 gr/dscf) was met during operations. In some cases this standard was not met. Current design modifications to operating commercial units are addressing this problem with the addition or planned-addition of a high efficiency scrubber system [7,22].

- The Shirco unit has demonstrated the ability to effectively decontaminate the waste feed and produce a furnace ash that contains minimal levels of organic contaminants consistent with applicable regulatory standards and guidelines. In particular, unit operations on waste feed contaminated with PCBs has consistently resulted in a furnace ash that meets the TSCA guidance level of 2 ppm of residual PCBs. The majority of the heavy metals in the feed concentrate in the furnace ash and may require further treatment to meet the toxicity characteristic standards.

- There is no definitive trend or evidence from the data that the Shirco thermal-treatment process reduces the mobility of heavy metals in the furnace ash as compared to the feed.

- Scrubber water quality was satisfactory in most operations and with appropriate onsite treatment can be discharged to local POTWs.

- In general, recent operations of the commercial units exhibit overall project utilization or operating factors ranging from 24%-61%. Intermittent operations of the commercial units over 1-3 mo. periods have realized utilization factors up to 90%, which are in agreement with the 85% factor claims by the vendor. Based on the data and the complexities of incineration systems in general, it is expected that an overall utilization factor of 50%-75% is a realistic and achievable range.

- During the operation of the pilot-scale unit at the Demode Road site, the unit was able to successfully decontaminate the feed and destroy PCBs using less electrical power when fuel oil was added to the waste and when PCC temperature was reduced. The addition of fuel oil also permitted a higher feed rate. Additional energy savings were obtained when the SCC temperature was also reduced. Cost savings in specific applications will depend on local fuel and electrical costs. Minimum PCC and SCC temperatures must be maintained to achieve adequate desorption and the necessary destruction of the organics.

- The Shirco unit is an attractive economical alternative to other established transportable thermal treatment systems and technologies. Costs based on the economic analysis range from approximately $182/ton- $24 1/ton of waste feed -- excluding waste excavation, feed preparation, vendor profit, and ash disposal costs.

Results of Applications Analysis

Site Characteristics

The commercial and pilot-scale units are designed for transport to remote sites and to be self-contained and stand-alone units. In all cases there was sufficient plot area to accommodate the units. Required site improvements, facilities upgrading, and utility connections were completed without significant problems that either delayed, aborted, or affected the operations of any specific cleanup action.

Waste CharacteristicsInformation on both the physical and chemical characteristics of the waste matrix is necessary to determine: the suitability of that waste for thermal processing using the Shirco technology, and the possible need for waste preparation and pretreatment.

Preoperations waste-feed characterization and laboratory analysis, and thermogravimetric analyses (TGA) (including pilot or bench-scale testing) are mandatory in order to define the waste feed matrix and its impact on the Shirco unit's pretreatment and waste-feed preparation requirements, metallurgical requirements and/or limitations, potential design limitations (particularly in the offgas treatment section), and operating conditions.

The following summary presents a range of waste characteristics suitable for processing in the Shirco unit based on an analysis of available data.

Characteristics	Applicable Range
morphology	soil/solid semi-solid oily-sludge/solid
particle size (diameter)	5 microns - 2 in.
moisture content	0-50 wt% (no free liquids or free-flowing sludges)
density	30-130 lb/ft3
heating value	0-10,000 Btu/lb
organics (including POHCs)	0-100 wt% (determined by preoperation testing)
chlorine	0-5 wt%
sulfur	0-5 wt%
phosphorous	0-300 ppm
pH	5-9
alkali metals	0-1 wt%
heavy metals	0-1 wt% (determined by preoperation testing)

In order to match specific-site waste-matrices to these waste characteristics, preprocessing to meet the physical and chemical characteristics requirements of the Shirco unit may be required. This includes sizing, classifying, screening, dewatering, soils blending, and/or lime addition prior to processing to ensure a solid/semi-solid matrix with characteristics within the applicable range of the unit. Pure liquids can also be processed if blended with a suitable carrier such as soil or vermiculite to form a semi-solid waste matrix.

Specific examples from the SITE demonstrations and case studies where departure from the recommended range of waste characteristics caused unit operating problems include:

Operation	Departure from applicable range	Unit problem
Peak Oil [1]	Improperly prepared oily/clumpy sludge	Materials handling Feed handling Ash handling
	High concentration of lead	Emissions control
Florida Steel [3,4,5]	Particle size	Particles passing through belt
	High chlorine content	Emissions control
	Low Btu	Maintaining PCC temperature
Brio [13]	Lumpy/clay feed	Materials handling Feed handling
International Paper [15]	Tar-like feed, adhesive and cohesive, high moisture	Materials handling Feed handling

Destruction and Removal Efficiency (DRE) and Stack Gas Emissions

In general, the Shirco unit has demonstrated the ability to achieve DREs of:

- organics greater than the RCRA performance standard of 99.99% (Appendix D-6)
- dioxins and furans greater than the RCRA performance standard of 99.9999% (Appendix D-9)
- PCBs greater than the TSCA performance standard of 99.9999% (Appendix D-2)

Volatile and semivolatile organic compounds measured in the stack gas were typical incinerator PICs — including halomethanes and chlorinated organics,

aromatic volatiles and semivolatiles and oxygenated hydrocarbons. These compounds were detected at levels significantly lower than established standards for their direct inhalation [23].

Acid Gas Removal and Particulate Emissions

The Shirco unit has demonstrated the ability to meet the RCRA performance standard of the larger of 1.8 kg/h of HCl in the stack gas or a 99% acid gas removal efficiency.

The commercial and pilot-scale Shirco operations have not consistently met the RCRA performance standard of 0.08 gr/dscf for particulate emissions. As with any transportable incineration system design, the need to meet a trailer size should not preclude adherence to an emissions-control system-design that will provide efficient control over a wide range of gas flows and particulate loadings. Recent commercial designs [7,22] have incorporated or plan to incorporate a high efficiency scrubber system.

Preoperations testing and analysis of the waste-feed for particle size and elemental (halides, S and P), metals (heavy and alkali), and organic species and concentrations are necessary to identify contaminants that may cause potential emissions problems. These tests will also define the limits of operation consistent with the waste-matrix and possible waste-pretreatment options.

Residual Contaminants in Furnace Ash and Scrubber Water

The Shirco unit has demonstrated the ability to effectively decontaminate the waste feed and produce a furnace ash that contains minimal levels of organic contaminants consistent with applicable regulatory standards and guidelines. The majority of the heavy metals in the feed will concentrate in the furnace ash and may require further treatment to meet the toxicity characteristic standards.

Scrubber water quality was satisfactory in most operations and with appropriate onsite treatment can be discharged to local POTWs.

Mobility of Heavy Metals

Despite high levels of metals in the waste-feed and furnace ash, the concentrations of metals in the EP Tox and TCLP leachates were low and in most cases met their respective toxicity characteristic standards. However, there is no trend or evidence from the data that the Shirco thermal treatment process reduces the mobility of heavy metals in the furnace ash as compared to the feed.

Overall Reliability of the Shirco Unit

In general, recent operations of the commercial units exhibit utilization or operating factors ranging from 50%-90%. The initial operation of a Shirco unit on a commercial basis at Peak Oil was at an overall utilization factor of only 24%. This was a first-of-a-kind operation on a difficult waste-feed where materials handling, feed system, and emissions control problems plagued the unit operation.

The commercial operation at Florida Steel initially ran at a utilization factor of 50%, which then increased to more than 90% during the final month of operation for an overall project factor of 61%. The operation at LaSalle Electric [11] — which is the same unit used at Peak Oil but with modifications addressing the operating problems encountered at Peak Oil — has been reported to be currently operating at a utilization factor of 80% to 90%.

Optimum Operating Conditions

During the SITE demonstration of the pilot-scale unit at the Demode Road Superfund site, a series of runs was conducted to examine the effect on energy consumption and changes in the residual levels of heavy metals and organics in the furnace ash versus the levels in the feed by varying operating conditions.

Based on the data obtained, an analysis was conducted to compare energy consumption in the unit at operating conditions that did not affect the performance of the unit. A reduction in the PCC operating temperature from 1,600° to 1,200°F reduced the average PCC power usage 48%. A reduction in the SCC operating temperature from 2,200° to 1,800°F reduced the average propane fuel consumption by 51%. The use of 3 wt.% fuel oil to supplement the fuel value of the feed further decreased PCC power usage by 26% to 67% at PCC operating temperatures of 1,600° and 1,200°F, respectively, with accompanying increases in overall feed rate of 32% and 26%. The costs for fuel oil and its attendant facilities still must be examined for specific applications to determine the cost effectiveness of a fuel oil additive to the waste feed.

The results did not provide any trend or change in the residual levels of the heavy metals and organics in the furnace ash versus the levels in the feed as the operating conditions were varied and PCC operating temperatures were maintained between 1,200° and 1,600°F. At an abnormally low PCC operating tem-

perature of 900°F, without the input of combustion air to simulate non- oxidizing or pyrolytic combustion conditions, total PCB and TCDF concentrations in the furnace ash increased. The increases may indicate that these PCC conditions led to incomplete desorption or incineration of PCBs and to the production of low levels of TCDF in the furnace ash from the incomplete combustion of PCBs in the feed.

Costs for Commercial Operations

The economic analysis is based on the processing of 36,500 tons of waste feed in a commercial unit. This quantity is based on the amount of waste that would be processed if the commercial unit operated at the design capacity of 100 ton/d, and a 100% operating (or utilization) factor over a 365-day annual period. However, the costs were adjusted to reflect real-time operations of the unit since periodic shutdowns are required in order to respond to maintenance or operational problems. Costs were based on operating factors ranging from 85% to 50%, equivalent to a range of 429 to 730 days at the site to process the 36,500 tons of waste feed. Additional cost data is provided in Appendices B, C, and D. A summary of the estimated costs obtained from the economic analysis and other data is presented below.

Data source	Unit capacity, tpd	Operating factor, %	Unit cost $/ton
Brio Site Friendswood, Tex. (Shirco cost est.) [13]	150 220	82 82	143(a) 119(a)
LaSalle Electric LaSalle, Ill., (Haztech proposal) [11]	100	60	300(a)
Florida Steel Indiantown, Fla. (OH Materials est.) [4,6]	100	61	<300(b)
Peak Oil Brandon, Fla. (SITE Tech. Eval. Report) [1]	100	80 37	197(c) 416(c)
ECOVA Dallas, Tex. (Vendor's claims) [19]	100	85	161-257(a)
Economic Analyses (Section 4)	100	85 80 70 60 50	182(c) 187(c) 200(c) 217(c) 241(c)

(a) Cost includes vendor profit but excludes waste excavation, feed preparation and ash disposal.
(b) Cost includes vendor profit, waste excavation and feed preparation but excludes ash disposal.
(c) Cost excludes vendor profit, waste excavation, feed preparation and ash disposal.

SECTION 2

INTRODUCTION

The SITE Program

In 1986, the EPA's Office of Solid Waste and Emergency Response (OSWER) and Office of Research and Development (ORD) established the Superfund Innovative Technology Evaluation (SITE) Program to promote the development and use of innovative technologies to clean up Superfund sites across the country. Now in its third year, SITE is helping to provide the treatment technologies necessary to implement new federal and state cleanup standards aimed at permanent remedies, rather than quick fixes. The SITE Program is composed of three major elements: the Demonstration Program, the Emerging Technologies Program, and the Measurement and Monitoring Technologies Program.

The major focus has been on the Demonstration Program, which is designed to provide engineering and cost data on selected technologies. To date, the demonstration projects have not involved EPA funding for technology developers. EPA and developers participating in the program share the cost of the demonstration. Developers are responsible for demonstrating their innovative systems at chosen sites, usually Superfund sites. EPA is responsible for sampling, analyzing, and evaluating all test results. The result is an assessment of the technology's performance, reliability, and cost. This information will be used in conjunction with other data to select the most appropriate technologies for the cleanup of Superfund sites.

Developers of innovative technologies apply to the Demonstration Program by responding to EPA's annual solicitation. EPA also will accept proposals at any time when a developer has a treatment project scheduled with Superfund waste. To qualify for the program, a new technology must be at the pilot or full-scale and offer some advantage over existing technologies. Mobile technologies are of particular interest to EPA.

Once EPA has accepted a proposal, EPA and the developer work with the EPA regional offices and state agencies to identify a site containing wastes suitable for testing the capabilities of the technology. EPA prepares a detailed sampling-and-analysis plan designed to thoroughly evaluate the technology and to ensure that the resulting data are reliable. The duration of a demonstration varies from a few days to several months, depending on the length of time and quantity of waste needed to assess the technology. After the completion of a technology demonstration, EPA prepares two reports, which are explained in more detail below. Ultimately, the Demonstration Program leads to an analysis of the technology's overall applicability to Superfund problems.

The second principal element of the SITE Program is the Emerging Technologies Program, which fosters the further investigation and development of treatment technologies that are still at the laboratory scale. Successful validation of these technologies could lead to the development of a system ready for field demonstration. The third component of the SITE Program, the Measurement and Monitoring Technologies program, provides assistance in the development and demonstration of innovative technologies to better characterize Superfund sites.

SITE Program Reports

The analysis of technologies participating in the Demonstration Program is contained in two documents, the Technology Evaluation Report and the Applications Analysis Report. The Technology Evaluation Report contains a comprehensive description of the demonstration sponsored by the SITE program and its results. This reported costs obtained from the economic analysis and other data is presented below.

The purpose of the Applications Analysis Report is to estimate the Superfund applications and costs of a

technology based on all available data. This report compiles and summarizes the results of the SITE demonstration, the vendor's design and test data, and other laboratory and field applications of the technology. It discusses the advantages, disadvantages, and limitations of the technology. Costs of the technology for different applications are estimated based on available data on pilot-scale and commercial applications. The report discusses the factors, such as site and waste characteristics, that have a major impact on costs and performance.

The amount of available data for the evaluation of an innovative technology varies widely. Data may be limited to laboratory tests on synthetic wastes, or may include performance data on actual wastes treated at the pilot- or full- scale. In addition, there are limits to conclusions regarding Superfund applications that can be drawn from a single field demonstration. A successful field demonstration does not necessarily assure that a technology will be widely applicable or fully developed to the commercial size. The Applications Analysis attempts to synthesize whatever information is available and draw reasonable conclusions. This document will be very useful to those considering the technology for Superfund cleanup and represents a critical step in the development and commercialization of the treatment technology.

Key Contacts

For more information on the demonstration of the Shirco technology, please contact:

1. Regional contact concerning the Peak Oil, Brandon, Fla. site:

   Mr. Fred Stroud
   USEPA, Region IV
   345 Courtland St. NE
   Atlanta, GA 30365
   404-347-3931

2. Regional contact concerning the Rose Township, Mich. site:

   Mr. Kevin Adler
   USEPA, Region V
   230 South Dearborn St.
   Chicago, IL 60604
   312-886-7078

3. EPA Project Manager concerning the SITE demonstrations:

   Mr. Howard Wall
   USEPA
   Risk Reduction Engineering Laboratory
   26 W. Dr. Martin Luther King Jr. Drive
   Cincinnati, OH 45268
   513-569-7691

4. Vendor concerning the process:

   ECOVA Corp.
   Mr. Mike Hill
   12790 Merit Drive #220
   Dallas, TX 75251
   214-404-7540

SECTION 3

TECHNOLOGY APPLICATIONS ANALYSIS

Introduction

This section of the report addresses the applicability of the Shirco infrared thermal destruction technology to various potential feedstocks, based on the results obtained from the SITE demonstration tests and other Shirco applications test data. Since the results of the Demonstration Tests provide the most extensive database, conclusions on the technology's effectiveness and its applicability to other potential cleanups will be strongly influenced by them; these are presented in detail in the Technology Evaluation Reports. Additional information on the Shirco technology, including a process description, vendor claims, a summary of the demonstration test results, and summaries of reports on outside sources of data using the Shirco technology are provided in Appendices A-D.

The subsequent discussions are presented in the following subsections:

- Conclusions — that have been drawn on the performance and applicability of the technology.
- Evaluation of Technology Performance — that discusses the available data from the demonstrations, ECOVA Corp., and other commercial and pilot-scale applications of the technology, and provides details on the analytical conclusions and applicability of the Shirco technology.
- Environmental Regulations and Comparison with Shirco Performance — that summarizes the regulations and environmental standards that apply to the operation of the Shirco unit.
- Waste Characteristics and Their Impact on the Performance of the Technology — that provides information defining the appropriate range and limits of physical and chemical characteristics of the waste-feed suitable for processing in the Shirco unit.
- Range of Site Characteristics Suitable for the Technology — that discusses the specific site requirements for a commercial unit operation including site physical characteristics, site area and utilities availability.
- Material Handling Required by the Demonstrated Technology — that discusses the type of excavation and materials handling procedures and equipment that are required and have been employed at commercial operations to complement the Shirco unit.
- Personnel Issues — that defines the personnel requirements for the operation of the Shirco commercial unit.
- Tests to Evaluate Technology Applicability and Performance — that discusses the necessary treatability testing and data required to establish the suitability of the waste-feed and the range of recommended operating parameters for the commercial unit to assure optimum performance within regulatory requirements.

Conclusions

The overall conclusions drawn from reviewing the data on the Shirco technology are discussed below. These conclusions are based on the information presented in detail in the remainder of this section.

Site Requirements

The Shirco commercial-scale unit is an easily-transportable modular design consisting of 5 main component trailers and auxiliary equipment that allows for cleanup at any location where access and site layout can accommodate standard tractor-trailers. Site area requirements include 15,000 ft^2 for processing, and 30,000 ft^2 for feed preparation, ash

storage, and other auxiliary service areas; total site requirements are approximately 45,000 ft^2 [19,22].

Characteristics of Waste Matrix and Waste Feed

The Shirco unit is designed to process solid wastes or sludges that do not contain free liquids. Waste preparation is necessary to ensure that particle size of the feed matrix is controlled between 5 microns and 2 in. Liquid wastes or sludges with free liquids can be combined with solid carriers such as sand, soil, or conditioning lime to render them suitable for processing. All large bulk objects must be shredded or reduced to within the above-mentioned size range to accommodate the unit's design operations constraints. In general, the waste feed to the Shirco unit should be relatively dry soil-like distinct particles sized as defined above.

The Shirco unit design incorporates a metal conveyor belt, conveyor belt rollers, and a series of rotary rakes for conveyor bed agitation. These internals will be affected by corrosive combustion atmosphere contaminants, thereby requiring preoperations analysis of the waste feed to ensure that the materials of construction are adequate. A pH below 5 and sulfur and chloride contents of more than 5 wt% in the waste feed will affect the materials integrity of the Shirco design. As in other thermal processes, fluorine and phosphorous concentrations greater than 300 ppm can affect the integrity of silica-based refractories and must be taken into account before processing a specific waste-feed matrix. Heavy metals, particularly lead, at concentrations greater than 1 wt% may possibly overload the air pollution control system if they vaporize and carryover to the scrubber. Alkali metals such as sodium and potassium at concentrations greater than 1 wt% may affect the integrity of the silica-based refractories and cause slagging and fouling problems in the air pollution control system. The concentrations of these metals must be determined before processing a designated waste-feed.

Preoperations testing and analysis of the waste matrix found at a potential site is *mandatory* in order to ensure that the waste and feed preparation systems design can accommodate the specific feed requirements of the Shirco unit.

Based on the limited unit dimensions, an optimal bed depth of 2 in., and a maximum particle size of 2 in., the design throughput for a Shirco unit is limited to 100-200 ton/d, depending on the physical and thermal characteristics of the waste feed.

Destruction and Removal Efficiency (DRE) and Stack Gas Emissions

In general, the Shirco unit has demonstrated the ability to achieve DREs at the following levels:

- organics greater than the RCRA performance standard of 99.99% (Appendix D-6)
- dioxins and furans greater than the RCRA performance standard of 99.9999% (Appendix D-9)
- PCBs greater than the TSCA performance standard of 99.9999% (Appendix D-2)

Volatile and semivolatile organic compounds measured in the stack gas were typical incinerator PICs -- including halomethanes and chlorinated organics, aromatic volatiles and semivolatiles, and oxygenated hydrocarbons. These compounds were detected at levels significantly lower than established standards for their direct inhalation.

Acid Gas Removal and Particulate Emissions

The Shirco unit has demonstrated the ability to meet the RCRA performance standard of the larger of 1.8 kg/h of HCl in the stack gas or a 99% acid gas removal efficiency.

The commercial and pilot-scale Shirco operations have not consistently met the RCRA performance standard of 0.08 gr/dscf for particulate emissions. As with any transportable incineration system design, the need to meet a trailer size should not preclude adherence to an emissions-control system design that will provide efficient control over a wide range of gas flows and particulate loadings. Recent commercial designs [7,22] of the Shirco unit have incorporated or plan to incorporate a high efficiency scrubber system.

Preoperations testing and analysis to determine potential emissions problems are necessary to define the limits of operation consistent with the waste matrix and possible waste pretreatment options.

Residual Contaminants in Furnace Ash and Scrubber Water

The Shirco unit has demonstrated the ability to effectively decontaminate the waste feed and produce a furnace ash that contains minimal levels of organic contaminants consistent with applicable regulatory

standards and guidelines. The majority of the heavy metals in the feed will concentrate in the furnace ash and may require further treatment based on toxicity characteristic standards discussed later in this section.

Scrubber water quality was satisfactory in most operations, and with appropriate onsite treatment, can be discharged to local POTWs. Questions concerning the effectiveness of the emissions control system, as discussed above, will impact on the scrubber water characteristics and quality.

Mobility of Heavy Metals

Despite high levels of metals in the waste-feed and furnace ash, the concentrations of metals in the EP Tox and TCLP leachates were low and in most cases met their respective toxicity characteristic standards. However, there is no definitive trend or evidence from the data that the Shirco thermal treatment process reduces the mobility of heavy metals in the furnace ash as compared to the feed.

Evaluation of Technology Performance

For the SITE demonstrations the following technical and performance criteria were addressed to evaluate the Shirco technology.

- DRE levels for designated POHCs, PCBs, and the presence of PICs in the stack gas. The regulatory standards are 99.99% DRE for POHCs and 99.9999% for dioxins and furans under the Resource Conservation and Recovery Act (RC RA) and 99.9999% DRE for PCBs under the Toxic Substances and Control Act (T SCA).
- Level of hydrogen chloride (HCl) and particulates (including heavy metals concentrations) in the stack gas. The RCRA standard for HCl in the stack gas is the larger of 1.8 kg/h (4 lb/h) or 99 wt% HCl removal efficiency. The RCRA standard for particulate emissions in the stack gas is 180 mg/dscm (0.08 gr/dscf).
- Level of residual heavy metals, organics, and PCBs in the furnace ash. The TSCA guidance level is 2 ppm of residual PCBs in the furnace ash.
- Mobility of heavy metals in the furnace ash as measured by the Extraction Procedure Toxicity (EP Tox) and the proposed Toxicity Characteristic Leaching Procedure (TCLP) tests.
- Mobility of heavy metals, particularly lead, in the furnace ash as compared to the feed.
- Level of residual heavy metals and organic compounds, and other physical and chemical characteristics in the scrubber water discharged from the unit.
- Overall performance and reliability of the unit during operation.
- Effect of varying operating conditions on unit performance and energy consumption.

The following discussion addresses the above criteria based on the results obtained during the SITE demonstrations on the Peak Oil commercial unit [1] and the Demode Road pilot-scale unit [2]. Summaries of these test results are presented in Appendices C-1 and C-2, respectively. In addition, the discussion that follows includes the results obtained during other pilot-scale and commercial operations involving the Shirco technology. Summaries of these test results are presented in Appendix D. These case studies include:

D-1	Florida Steel pilot-scale tests [3-5]
D-2	Florida Steel TSCA trial burns [5]
D-3	Florida Steel commercial cleanup [4,6]
D-4	LaSalle Electric commercial cleanup [7-11]
D-5	Twin Cities pilot-scale tests [12]
D-6	Brio pilot-scale tests [13]
D-7	Tibbetts Road pilot-scale tests [14]
D-8	International Paper pilot-scale tests [15]
D-9	Times Beach pilot-scale tests [16,17]
D-10	Simulated creosote pit pilot-scale tests [18]

Destruction and Removal Efficiency (DRE)

SITE Demonstration Results—
The SITE demonstration results detected less than 25 ppt total PCBs in the Peak Oil stack-gas samples and less than 180 ppt total PCBs in the Demode Road stack-gas samples. In both cases, the data was slightly above or at the detection limits. Total PCB concentrations in the feed ranged from 3.48 to 5.8 5 ppm at Peak Oil and from 10.2 to 35.2 ppm at Demode Road. Based on these results, the Peak Oil commercial unit achieved DREs for PCBs ranging from 99.99 80% to 99.99972%, and the Demode Road pilot-scale unit achieved DREs for PCBs ranging from greater than 99.9922% to 99.9982%. In general, the low PCB concentrations in the feed resulted in DRE values

that were not able to confirm achievement of the TSCA regulatory standard of 99.9999%.

Case Study Results—
Except for a few specific runs in several of the case study programs, the results met the RCRA DRE performance standard of 99.99% for designated POHCs and 99.9999% for dioxins and furans, and the TSCA DRE performance standard of 99.9999% for PCBs. DRE results are presented below, and the specific runs that did not meet the DRE performance standard are discussed.

Case Study	POHC	DRE, %
Florida Steel pilot-scale tests	PCB	99.9989/99.99992
Florida Steel TSCA trial burns	PCB	>99.9999
Florida Steel commercial cleanup	PCB	No available data
LaSalle Electric commercial cleanup	PCB	No available data
Twin Cities pilot-scale tests	PCB	99.997/99.9999989
Brio pilot-scale tests	CCl4	>99.99
Tibbetts Road pilot-scale tests	PCB	99.99981/99.99992
International Paper pilot-scale tests	PCB	>99.99
Times Beach pilot-scale tests	TCDD	>99.9999
Simulated creosote pit pilot-scale tests	PCP	>99.99

As presented above, runs on the Florida Steel pilot-scale tests, Twin Cities Pilot-Scale Tests, and Tibbetts Road pilot-scale tests failed to meet the TSCA DRE performance standard of 99.9999% for PCBs. The explanations that are presented in the specific case study reports are listed below:

- Florida Steel — Low oxygen level in secondary combustion chamber due to misoperation.
- Twin Cities - Possible sample contamination.
- Tibbetts Road - Low concentrations of PCBs in the stack gas sample.

Summary of Results—
With the exception of cases where low PCB concentrations in the feed and the stack gas resulted in low DRE values, the results tend to indicate that the Shirco technology can meet the designated RCRA and TSCA DRE performance standards for stack gas emissions.

Organic Stack Gas Emissions

SITE Demonstration Results—
The SITE demonstration results detected several volatile and semivolatile organic compounds in the stack gas at concentrations less than 50 ppb and below established standards for direct inhalation. They included:

- Chlorinated methanes, methylene, ethanes, ethylenes, and other halomethanes.
- Aromatic volatiles and semivolatiles, such as benzene, toluene, xylene, chlorobenzene, ethylbenzene, naphthalene, styrene, and pyridine.
- Oxygenated hydrocarbons, including phthalates, p-chloro-m-cresol, phenol, benzoic acid, acetone, butanone, and acetophenone.

Dioxins and furans were not detected in the stack gas samples.

Case Study Results—
All of the case studies detected volatile and semivolatile organic compounds similar to the general species discussed above and at concentrations less than the established standards for direct inhalation. In one run conducted during the Tibbetts Road pilot-scale test [14] a detectable level of TCDF was found and is attributable to a combination of a poor SCC operation and the possibility that TCDF may have been a PIC for the PCBs in the waste feed.

Summary of Results—
All of the data consistently showed minimal concentrations of volatile and semivolatile organic compounds in the stack gas at levels less than established standards for direct inhalation [23]. The organics included chlorinated organics and halomethanes; aromatic compounds such as benzene, toluene, xylene, chlorobenzene, ethylbenzene, and naphthalene and related compounds; and oxygenated hydrocarbons such as phthalates, phenol and related compounds, benzene-related compounds, and ketones. Dioxins and furans were not detected, with the one exception (TCDF) discussed above.

Acid Gas Removal

SITE Demonstration Results—
During the SITE demonstrations, the level of chlorine in the waste feed was less than 0.15 wt%, and

HCl mass flows in the stack gas were less than 10 g /h, which is considerably lower than the RCRA performance standard of 1.8 kg/h. Calculated efficiencies for the Demode Road pilot-scale demonstration ranged from 97.23 to 99.35 wt.%; Peak Oil HCl removal efficiencies could not be calculated because of the low concentration of chlorine in the feed.

Case Study Results—
In all of the case study results, the data resulted in HCl mass flows in the stack gas that were less than the RCRA performance standard of 1.8 kg/h.

Summary of Results—
All of the available data on the operation of the pilot-scale and commercial units indicate that the units have not experienced any problems in meeting the RCRA performance standard of the larger of 1.8 kg/h HCl mass flow or 99 wt% HCl removal efficiency.

Particulate Emissions

SITE Demonstration Results—
Although the Demode Road pilot-scale demonstration successfully achieved particulate emission levels ranging from 7 to 68 mg/dscm (which are below the RCRA standard of 180 mg/dscm), the Peak Oil commercial demonstration had continuing problems meeting the RCRA particulate emissions standard. During the Peak Oil demonstration, particulate emissions ranged from 322 to 155 mg/dsc m. Only after a thorough cleaning of the system and several mechanical adjustments were the particulate emissions below the RCRA standard. Analyses of the particulates indicated extremely high concentrations of lead, sulfur, and sodium, with an average lead concentration of 58 wt%. Based on the high initial concentrations of these metals in the feed, the use of poor quality sodium carbonate solutions in the emissions scrubbing system, and the potential for vaporization of these metals and carryover of lead salts as fines (as illustrated by the high lead concentrations), it is possible that these species severely impacted on the overall particulate emissions fines flow and overloaded the emissions control system. It is interesting to note that the emissions control section of the Shirco unit that was employed at Peak Oil has been replaced with a totally different design in the high- efficiency Calvert scrubber, which is designed to provide improved particulate removal efficiencies over a wider range of gas flows and fines loadings.

Case Study Results—
All of the case study tests met the RCRA particulate emissions standard of 0.08 gr/dscf, with the exception of two runs during the Florida Steel TSCA trial burns on the commercial-scale unit, four runs during the Twin Cities pilot-scale tests, and one run during the International Paper pilot-scale tests. For these specific runs, the data indicate the following reasons for the failure of the operation to meet the regulatory standard.

- Florida Steel - During one run the scrubber malfunctioned. The reports do not provide any additional details. A second run was conducted on an Askarel-spiked feed containing more than 1.9 wt% total chlorine in the feed. The case study data indicate that the high chlorine content contributed to the overloading of the venturi scrubber system and the high particulate emissions. The TSCA permit restricts the chlorine content in the feed to a maximum of 0.9 wt% with a feedrate of 133 lb/h of chlorine to minimize the problem.

- Twin Cities - During three runs, the particulate emissions exceeded the regulatory standard because of plugging/corrosion in the scrubber venturi and toner scrubbing nozzles. During a fourth run, the 100 lb/h feedrate to the pilot-scale unit apparently overloaded the scrubbing system. When the feedrate was reduced to 90 lb/h, the operation was satisfactory.

- International Paper — High particulate emissions during one of the tests was the result of soot formation caused by an improper control of oxygen in the primary combustion chamber.

Summary of Results—
Based on the above discussions, there are several operations where both the pilot-scale and commercial units have failed to meet the RCRA particulate emissions standard. The commercial unit now operating at LaSalle Electric is equipped with a totally new high efficiency scrubbing system that replaced the poorly performing system originally employed at Peak Oil, as discussed above. Another commercial unit [22] is planning to incorporate a similar high efficiency scrubbing system to obtain high efficiency over a wider range of gas flows and fines loadings. Pretest analyses of the waste-feed for particle size and elemental (halides, S and P), metals (heavy and alkali), and organic species and concentrations are necessary to identify contaminants that may cause particulate emissions problems. As discussed in a later subsection, treatability testing that includes bench- and/or pilot-scale testing and thermogravimetric analyses (TGA) are also required to define potential particulate emissions loadings.

Characteristics of the Furnace Ash

SITE Demonstration Results—
The total PCB concentrations in the furnace ash sampled during the normal operations of the units were less than 1 ppm, which is below the TSCA guidance level of 2 ppm, indicating effective PCB decon-

tamination of the waste feeds containing levels up to 35.2 ppm. Additional tests were performed during the Demode Road pilot-scale program at PCC operating temperatures lower than the normal 1,600°F and ranging from 900° to 1,400°F. A series of operating conditions were imposed on the unit, including shutting off the combustion air to simulate pyrolytic conditions, and varying residence time in the PCC. At 900°F with no combustion air flow, two samples of furnace ash exceeded the TSCA guidance level of 2 ppm PCBs, containing 3.396 and 2.079 ppm PCBs. At this low PCC temperature and pyrolytic condition, these higher total residual PCB levels in the furnace ash may have been the result of the incomplete combustion of PCBs in the feed. This is further substantiated by residual levels of TCDF present in the same furnace ash samples. (No dioxins or furans were detected in any of the other Demode Road demonstration furnace ash samples.)

The concentrations of metals in the furnace ash were similar to the concentrations in the waste feed and indicate that the mass flow of these species remains with the high mass flow of furnace ash that exits the Shirco unit.

The analyses detected several volatile and semivolatile organic compounds in the furnace ash at average concentrations less than 50 ppb. The compounds include: halomethanes; aromatic organics (including benzene, toluene, chrysene, fluoranthene, phenanthrene, and pyrene); and oxygenated hydrocarbons (includi ng phenol, phthalates, and p-chloro-m-cresol). Methylene chloride, acetone, and methyl-ethyl-ketone, tetrachloroethylene and trichloroethene were also detected but may be present due to laboratory contamination.

Except for the TCDF detected during one of the Demode Road pilot-scale unit runs and discussed above, no dioxins or furans were detected in the furnace ash samples.

Case Study Results—

All of the case study data confirmed the satisfactory results obtained during the SITE demonstrations, except for two runs conducted during the

Florida Steel TSCA trial burns, where the PCB content in the furnace ash exceeded the 2 ppm TSCA guidance level. It was determined that the quality of the auxiliary fuel suffered as a result of the poor handling during addition to the waste, which in turn affected the efficiency of PCB removal.

Summary of Results—

In general, the concentrations of PCBs and other organics in the furnace ash met all regulatory standards. Several volatiles and semivolatiles were detected, including halomethanes, aromatics, and oxygenated hydrocarbons. Metals concentrations approximated those in the feed and indicated that the majority of the metals remain with the furnace ash exiting the unit.

Mobility of Heavy Metals — Comparison to EP Tox and Proposed TCLP Toxicity Characteristic Standards

SITE Demonstration Results—

In order to determine whether heavy metals would leach from the waste feed and Shirco byproducts, EP Tox and TCLP tests were conducted on the feed, furnace ash, scrubber water, and scrubber solids and compared to their respective toxicity characteristic standards.

For the Peak Oil demonstration all of the results of the EP Tox tests on the feed and the furnace ash exceeded the 5 ppm toxicity characteristic standard for lead (24-57 ppm). Two samples of the feed exceeded the proposed TCLP toxicity characteristic standard of 5 ppm for lead (8.6 ppm and 35 ppm). All of the furnace ash samples passed the TCLP standard. For the other heavy metals, all of the results were below their respective toxicity standards.

For the Demode Road demonstration all of the results were below the EP Tox and proposed TCLP toxicity characteristic standards — 5 ppm arsenic, 100 ppm barium, 1 ppm cadmium, 5 ppm chromium, 5 ppm lead, 0.2 ppm mercury, 1 ppm selenium, and 5 ppm silver — except for 1 feed sample at 7.0 ppm lead (TCLP) and 1 furnace ash sample at 6.2 ppm lead (TCLP).

Case Study Test Results—

EP Tox tests were conducted on the furnace ash produced during the Florida Steel TSCA trial burn and the Brio pilot-scale tests. In both cases, the results were less than the EP Tox toxicity characteristic standard for heavy metals. No data was provided for the waste feed.

Summary of Results—

Despite concentrations of heavy metals in the waste-feed and furnace ash as high as 5,900 ppm and 7,100 ppm (lead) respectively, in most cases the concentrations of metals in the EP Tox and TCLP leachates met their respective toxicity characteristic standards.

Mobility of Heavy Metals — Comparison of Feed and Furnace Ash

SITE Demonstration Results—

In order to determine whether heavy metals, particularly lead, would leach from the furnace ash pro-

duced in the Shirco unit, EP Tox and TCLP tests were conducted to determine the mobility of heavy metals from the furnace ash as compared to the feed.

For the Peak Oil demonstration the EP Tox results for lead in the leachate ranged from 24 to 57 ppm for the feed and 25 to 46 ppm for the furnace ash. The TCLP results ranged from 2.5 to 35 ppm for the feed and 0.008 to 0.84 ppm for the furnace ash.

For the Demode Road demonstration the initial EP Tox analyses for lead in the leachate ranged from 0.05 to 0.67 ppm for the feed and 0.05 to 4.10 ppm for the furnace ash. The initial TCLP analyses ranged from 0.35 to 1.80 ppm (with one sample at 7.0 ppm) for the feed and 0.05 to 4.10 ppm (with one sample at 6. 20 ppm) for the furnace ash. When several samples were retested to verify the results, the concentrations of lead in the EP Tox leachates (4.9 ppm feed, 3.0 ppm furnace ash) were higher than during the initial tests, and in direct reversal to the original data, exceeded corresponding TCLP leachate concentrations (2.8 ppm feed, 1.4 ppm furnace ash).

A comparison of the SITE demonstration toxicity characteristic data indicates contrasting results. Whereas the EP Tox results from the Peak Oil data agreed with the results and conclusions from the Demode Road tests, the TCLP tests resulted in lower concentrations of lead in the leachates of the furnace ash as compared to the feed, indicating reduced mobility of lead from the furnace ash as compared to the feed as a result of thermal treatment. These mixed results as compared to the Demode Road tests may be the result of differences in the test procedures and the alkalinity of the waste feed (the waste feed at Peak Oil was pretreated with lime), which caused a difference in the pH environment that is sufficient to affect the solubility and leaching characteristics of heavy metals, particularly lead.

Summary of Results—
The case study data did not provide any additional information to support the SITE demonstration results. The results do not show any trend or evidence that heavy metals, particularly lead, have reduced mobility in the furnace ash as compared to the feed as a result of the thermal treatment through the Shirco unit.

Characteristics of the Scrubber Water

SITE Demonstration Results—
During the Peak Oil and Demode Road demonstrations, no PCBs, dioxins, or furans were detected in the scrubber water leaving the unit. Trace levels of phthalates and p-chloro-m-cresol were detected at concentrations less than 100 ppb. High levels of benzene and toluene were detected during the Demode Road demonstration but they were also present in the scrubber makeup water as an external contaminant. The major concentration of contaminants was found in the scrubber water solids associated with the Peak Oil demonstration. Significant concentrations of metals -- including aluminum, calcium, iron, lead, sodium, sulfur, and zinc at levels at-or-above 1 wt% — were detected. These high concentrations are indications of the large flow of contaminants to the venturi scrubber system and tend to confirm the particulate emissions problems occurring at the Peak Oil venturi scrubber system as discussed above. Even with the high scrubber-water blowdown-rate with its associated high contaminant concentrations, particulate emissions were above the RCRA standard and contained very high metals concentrations. The scrubber water blowdown required clarification, treatment with activated carbon, and pH adjustment in a holding tank prior to discharge to the POTW.

Summary of Results—
The case study data did not indicate any significant levels of PCBs, dioxins, furans, or other volatile and semivolatile organics in the scrubber water. The Peak Oil data, with its significant scrubber system overloading, reemphasizes the need to pretest and analyze the waste matrix to assess its impact on the scrubber system and its effluents.

Operations

SITE Demonstration Results—
There were no problems associated with the operation of the Demode Road pilot-scale unit that would impact on the ability of a commercial Shirco unit to achieve a satisfactory level of continuous operating performance.

The Peak Oil commercial unit, which was the first application of a full- scale commercial unit at a Superfund site, exhibited many problems, associated mainly with feed preparation, materials handling, and emissions control. On an overall schedule basis, the unit remained at the site, after installation and startup, for a period of 286 days. Based on a continuous capacity of 100 ton/d and a total processed waste feed tonnage of 7,110 tons, the unit ideally only required 71 operating days based on a 100% utilization factor. The actual utilization factor, based on the above, is 24%.

Preoperations testing and evaluation of alternative feed preparations and materials handling systems based on the physical and chemical characteristics of the site waste matrix and the acceptable waste feed specified for the unit are mandatory and cannot be understated. These issues were not examined to the extent necessary for a successful Peak Oil operation, where the combination of an acidic, oily, clumping

sludge, and an extraordinary high-lead-contaminant concentration provided a serious challenge to the operation of the unit.

Case Study Results—
Several of the case studies encountered problems, incorporated design modifications, and provided information on overall system reliability and utilization.

- Florida Steel pilot-scale tests — Because of a low-Btu waste feed, the primary combustion chamber could not maintain the desired operating temperature at maximum electrical power input. Preoperations testing and analysis is required to define an overall heat and material balance prior to the commitment of a commercial-scale unit.

  The analysis of one run that did not meet the TSCA DRE standard for PCBs indicated that a low oxygen level in the secondary combustion chamber will affect the unit's ability to meet this standard.

- Florida Steel TCSA trial burns — Based on initial tests conducted on the commercial-scale unit, several modifications were implemented during the TSCA trial burn. These included modifications to the ash collection system, the fines ash system that collects the material that falls through the conveyor belt, the ash quench module, scrubber blowdown operating procedures, and the feed-hopper feeding mechanism. The air compressor was also replaced with one of high capacity. Details of these changes were not made available, although it was indicated that the fines-ash collection system was modified to transfer the ash back to the primary chamber via a closed loop design to preclude exposure to PCDFs.

- Florida Steel commercial-scale cleanup — Case study data indicate that a major design change involved the replacement of the conveyor belt with a new smaller-gauge belt that precluded substantial "sift-through" of smaller feed particles and sand. Attention to the physical characteristics of the waste matrix and its impact on the unit operation should have eliminated this problem.

  The initial operating factor for the unit was approximately 50%. The onstream time continuously increased as the unit operation stabilized, with the final month of operation sustaining a 91% utilization factor. The overall project utilization rate was 61%.

- LaSalle Electric commercial cleanup — Case study data indicate that the commercial operation is achieving utilization factors of 80%-90%. The waste preparation system, including the power screen, is performing well, although long slender nails and spikes can pass through the screen and into the unit. This operation on a relatively-dry discrete soil is in sharp contrast to the poor operation of this same unit at the Peak Oil site where an oily, sludge waste matrix caused significant waste feed preparation and materials handling problems.

- Brio and International Paper pilot-scale tests — In both case studies, waste feed that was either lumpy and clay-like, or tar-like with moisture and clay-like adhesive qualities, caused problems in handling and feeding the material to the pilot-scale unit. These tests are a clear warning that the use of a commercial-scale Shirco unit at such sites without a careful and comprehensive waste preparation and materials handling design will not be successful.

Summary of Results—
The operation of a commercial Shirco unit design requires strict adherence to preoperations testing and analysis to characterize the waste matrix and determine the required methodology for feed preparation and materials handling. With an acceptable feed matrix, and based on recent design changes to the current commercial units, the results indicate that recent overall project utilization rates of more than 60% have been achieved. Intermittent operations over 1-3 month periods have achieved rates up to 90%.

Optimum Operating Conditions

SITE Demonstration Results—
The Peak Oil commercial unit was being operated at a remedial action to meet the objectives of the cleanup at satisfactory regulatory performance standards under optimum operating conditions. During the tests, the high Btu feed produced an autogenous combustion condition that allowed intermittent operations at specified temperatures without the input of electrical power to the infrared heating rods in the primary combustion chamber.

The Demode Road pilot-scale demonstration included a series of runs that were conducted to examine the effect of varying operating conditions on unit performance and energy consumption. Highlights of the results are as follows:

- A reduction in the PCC operating temperature from 1,600° to 1,200°F reduced the average PCC power usage by 48% from 0.2294 to 0.1200 kWh/lb feed.

- A reduction in the SCC operating temperature from 2,200° to 1,800°F reduced the average propane fuel consumption by 51% from 3,997 to 1,952 Btu/lb feed. It should be noted, however, that the TSCA regulations require an SCC operating tem-

perature of 2,200°F for the incineration of PCB contaminated waste.

- The use of 3 wt% fuel oil to supplement the heating value of the feed further decreased PCC power usage by 26%-67% at PCC operating temperatures of 1,600°F and 1,200°F, respectively, with accompanying increases in overall feedrate of 32% and 26%.
- The addition of the fuel oil increased the average HHV of the feed from 210 to 588 Btu/lb. This increase in heating value is equivalent to a savings of 0.11 kWh/lb feed. Reductions in power when fuel oil was added to the feed were 0.07 and 0.09 kWh/lb feed, which closely approximates the calculated value of 0.11 kWh/lb feed based on heating value.
- The costs for fuel oil and its attendant facilities still must be examined for specific applications to determine the cost effectiveness of a fuel oil additive to the feed. The cost of power, the moisture content of the feed, the total heating value of the feed, PCC residence time, and the overall PCC design heating input will all impact on the necessity for and the quantity of the addition of fuel oil to the feed.
- The results did not provide any trend or show any change in the residual levels of the heavy metals and organics in the furnace ash versus the levels in the feed as the operating conditions were varied and PCC operating temperatures maintained at 1,200° to 1,600°F. At an abnormally low PCC operating temperature of 900°F, without the input of combustion air to simulate non-oxidizing or pyrolytic combustion conditions, total PCB and TCDF concentrations in the furnace ash increased. The increases may indicate that these PCC conditions led to incomplete desorption or incineration of PCB and to the production of TCDF from the incomplete combustion of PCBs in the feed.

Case Study Results—

Several of the pilot-scale case studies — including Florida Steel, Brio, Times Beach, and Simulated Creosote Pit — were conducted at varying operating conditions. Tests were performed at PCC operating temperatures ranging from 1, 600° to 1,800°F, SCC operating temperatures ranging from 1,800° to 2,200°F, and PCC residence times ranging from 15 to 45 min. In general all of the results met applicable operating and regulatory performance standards; no data were presented on energy consumption.

Summary of Results—

The Demode Road pilot-scale SITE demonstration indicates that the operating conditions of the Shirco unit can be varied within limits to provide efficient energy consumption and unit operation and meet all applicable unit and regulatory performance standards. Key parameters that can be varied include fuel oil addition to the waste feed, PCC and SCC operating temperatures, combustion air flows, and PCC residence time. Preoperations waste-feed- matrix laboratory analysis and thermogravimetric analyses -- including bench- or pilot-scale testing — will establish the recommended range of operating parameters for the commercial unit to assure optimum operation within regulatory requirements.

Environmental Regulations and Comparison with SHIRCO Performance

Introduction

Section 121 of CERCLA (Comprehensive Environmental Response, Compensation, and Liability Act) requires that, subject to specified exceptions, remedial actions must be undertaken in compliance with applicable or relevant and appropriate requirements (ARARs), federal laws, and more stringent promulgated state laws (in response to releases or threats of releases of hazardous substances or pollutants or contaminants as may be necessary to protect human health and the environment).

The basic ARARs of interest are outlined in the Interim Guidance on Compliance with ARAR, FRL-3249-8, Federal Register, Vol. 52, pp. 32496 et seq. These are:

- Performance-, design-, or action-specific requirements. Examples include RCRA incineration standards and Clean Water Act pretreatment standards for discharges to POTWs. These requirements are triggered by the particular remedial activity selected to clean a site.
- Ambient/chemical-specific requirements. These set health-risk-based concentration limits based on pollutants/contaminants, e.g., emissions limits and ambient air quality standards (NAAQS). The most stringent ARAR must be followed.
- Location Requirements. These set restrictions on activities because of site location and environs, e.g., federal/state siting laws.

Superfund regulations in 40 CFR 300.68(a)(3) state that federal, state, and local permits are not required for Superfund-financed remedial actions or remedial actions taken pursuant to federal action under Section 106 of CERCLA. However, several states, including Connecticut, Maine, Massachusetts, New Hampshire, Rhode Island, Vermont, New Jersey, New York, Pennsylvania, and California, have independent state Superfund laws that may be more stringent than the federal laws, and thereby have

primacy. In addition, some state and local authorities — such as the California South Coast Air Quality Management District (SCAQMD) and Department of Health Services (DOHS) — insist that all potential Superfund-site incinerators must be permitted like any other incinerator — in apparent disagreement with the federal regulation cited above. Deployment of a Shirco unit will therefore be affected by three main levels of regulation:

- Federal EPA incinerator, air, and water-pollution regulations
- State incinerator, air, and water-pollution rules
- Local regulations, particularly Air Quality Management District (AQMD) requirements.

Federal EPA Regulations

ARARs—
As discussed in the interim guidance document on compliance with ARAR (FRL -3249-8), a requirement under other environmental laws may either be "applicabl e" or "relevant and appropriate" to a remedial action, but not both. A two- tier test may be applied: first, to determine whether a given requirement is applicable; then, if it is not applicable, to determine whether it is nevertheless relevant and appropriate.

"Applicable requirements" means those cleanup standards, standards of control, and other substantive environmental protection requirements, criteria, or limitations promulgated under federal or state law that specifically address a hazardous substance, pollutant, contaminant, remedial action, location, or other circumstance at a Superfund site.

"Applicability" implies that the remedial action or the circumstances at the site satisfy all of the jurisdictional prerequisites for a requirement. For example, the hazardous-waste incinerator regulations would apply for incinerators operating at Superfund sites containing listed or characteristic hazardous wastes.

"Relevant and appropriate requirements" means those cleanup standards, standards of control, and other substantive environmental protection requirements, criteria, or limitations promulgated under federal or state law that, while not "applicable" to a hazardous substance, pollutant, contaminant, remedial action, location, or other circumstance at a Superfund site, address problems or situations sufficiently similar to those encountered at the Superfund site that their use is well suited to the particular site. For example, if a Superfund site contained no specifically listed or characteristic hazardous wastes, the hazardous-waste incinerator regulations might still be considered relevant and appropriate.

Incinerator Regulations—
Resource Conservation and Recovery Act (RCRA)--The federal hazardous-waste incinerator regulations are considered either "applicable" or "relevant and appropriate" to the incineration of a Superfund site waste. These regulations establish hazardous-waste incineration performance standards under RCRA, as detailed in 40 CFR 264 Subpart O. These regulations are applicable to incineration of hazardous wastes at a Superfund site, and may be deemed relevant and appropriate to the incineration of some wastes that are not specifically listed in 40 CFR Part 261.

The important incinerator regulations are:

- Performance standards: Section 264.343
- Operating requirements: Section 264.345
- Monitoring and inspections: Section 264.347
- Rulemaking petitions (delisting): Sections 260.20 and 260.22

Under the current version of these regulations, an incinerator will be required to:

- Achieve a DRE of 99.99% for each principal organic hazardous constituent (POHC) in the waste feed
- Control HCl emissions to the larger of 1.8 kg/h (4 lb/h) or 1% of the stack HCl, prior to entering any pollution control equipment
- Limit particulate emissions to less than 180 mg/dscm (0.08 gr/dscf), corrected to 7% O_2
- Continuously monitor combustion temperature, waste feedrate, and an indicator of combustion gas velocity
- Continuously monitor CO in the stack gas
- Produce byproducts that are not hazardous and can be delisted because they do not exhibit hazardous characteristics or contain the originally-listed hazardous constituents; or contain the originally-listed hazardous constituents at relatively low concentration; or contain the listed constituents in an immobile form.

Toxic Substances Control Act (TSCA)—Incineration of polychlorinated biphenyls (PCBs) and PCB-contaminated materials is regulated under TSCA as detailed in 40 CFR 761.70. These regulations establish performance standards for non-liquid PCB waste incineration that relate to the following factors:

- Demonstrating that mass air emissions from the incinerator are no greater than 0.0001 g PCB/kg

of the PCBs in the feed to obtain a DRE of at least 9 .9999% (also known as "six 9s")

- Demonstrating a combustion efficiency (CE) of at least 99.99%, where:

$$CE = \frac{CO_2}{CO_2 + CO} \times 100$$

where:

CO_2 = concentration of carbon dioxide in stack gas
CO = concentration of carbon monoxide in stack gas

- Measurement and recording (at intervals no longer than 15 min.) of the rate and quantity of PCBs fed to the unit
- Continuously measuring and recording the temperature of the incineration process (combustion chambers)
- Monitoring and recording the concentrations of O_2 (continuously), CO (continuously), and CO_2 (periodically at a specified frequency) in the stack emissions, whenever PCBs are burned
- A system to automatically stop the PCB feed whenever the monitoring operations specified for O_2, CO_2, and CO fail
- Monitoring stack emissions for O_2, CO, CO_2, NO_x, HCl, total chlorinated organics, PCBs, and total particulate matter, when the incinerator is first used for the disposal of PCBs, or when the incinerator has been modified in a manner that may affect emissions
- Using water scrubbers to control HCl. For approval, EPA requires that the HCl removal systems demonstrate a removal efficiency of 99%
- Measurement of the stack emissions for chlorinated dibenzodioxins and dibenzofurans
- Demonstrating particulate matter emissions levels of <180 mg/dscm (0.08 gr/dscf), when corrected to 7% oxygen
- Demonstrating total PCB concentration in scrubber water and furnace ash of <2 ppm

Table 1 summarizes the results of the SITE demonstrations of the Shirco technology on a commercial transportable unit and a pilot-scale unit at the Peak Oil and Demode Road Superfund sites, respectively. The table compares these results to the RCRA and TSCA performance standards for hazardous waste incineration, as discussed above.

Water Regulations—
Provisions of the Safe Drinking Water Act also apply to remediation of Superfund sites. CERCLA 121(d)(2)(A) and (B) explicitly mention three kinds of surface water or groundwater standards with which compliance is potentially required — maximum contaminant level goals (MCLGs), federal water quality criteria (FWQC), and alternate concentration limits (ACLs) where human exposure is to be limited. This

Table 1. Site Demonstration: Comparison of Results to Environmental Standards

Performance Standards	RCRA Standard	TSCA Standard	Peak Oil Demonstration	Demode Road Demonstration
POHC DRE, %	≥99.99	≥99.9999 (PCBs)	>99.99[a] (PCBs)	>99.99[a] (PCBs)
HCl Stack emissions	≤1.8 kg/h or ≥99% Removal	≥99% Removal	>99% Removal	<0.001 kg/h
Particulate emissions, mg/dscm	≤180	≤180	171-358[b]	7-69
CE, %	NA	≥99.9	>99.9	>99.9
Total PCBs -scrubber water and furnace ash, ppm	NA	≤2	0.01-0.9	0.003-3.396[c]
Monitoring emissions	Required	Required	Yes	Yes
PCB feed cutoff	NA	Required	Yes	Yes

(a) DRE calculation based on less-than-detectable PCB concentrations in stack gas.
(b) Venturi scrubber overloading. Unit's venturi scrubber system has been replaced with a more efficient and high impact system.
(c) Operating at abnormally low PCC operating temperature.

subsection of CERCLA describes these requirements and how they may be applied to Superfund remedial actions. The guidance is based on federal requirements and policies; more stringent promulgated state requirements (such as a stricter classification scheme for groundwater) may result in application of even stricter standards than those specified in federal regulations.

Disposal of scrubber water (blowdown) at Peak Oil required pretreatment (n eutralization and precipitation/sedimentation) prior to disposal at a POTW. The scrubber water at Demode Road was drummed and disposed of at an accredited treatment facility.

State and Local Regulations

In addition to the federal regulations discussed above, the Federal Prevention of Significant Deterioration (PSD) and New Source Review (NSR) regulations promulgated under the Clean Air Act and administered by the states will impact the operation of the Shirco unit through the emissions monitoring control and process requirements, or through the permitting process in areas that require permits to install and operate. In addition to these, there are several local regulations that govern incinerator operations, because incinerators are combustion devices (emissions sources). Many of these state and local emissions regulations are more stringent than EPA rules, and the cognizant regulatory agencies have primacy. Pressure should, therefore, be anticipated from state and local authorities in relation to NOx emissions, for example.

There are six basic sources of potential regulations at the state and local levels:

- Permits to construct/operate
  - —Best available control technology (BACT) triggers for stationary sources or units
  - —Cumulative or offset triggers
- New Source Review
  - —BACT trigger levels and BACT designations
  - —Offset triggers
- Prevention of Significant Deterioration
  - —BACT controls
  - —Increment limitations
- General prohibitions on emissions levels
- Source-specific standards on emissions levels (currently there are none, but the mechanism exists)
- Nuisance rules

Discharge permits may also be required from the regional water quality board.

The major regulatory requirements include permits to install and operate as well as NSR/PSD reviews as appropriate. Many states, such as California, New Jersey, Pennsylvania, Ohio, New York, Texas, and Virginia, require some form of NO_x control and/or monitoring for CO, unburned hydrocarbon (UHC), and NO_x. These regulations apply to all incinerators. The required control is a BACT, reasonably available control technology (RACT), or lowest achievable emission rate (LAER) control, and ranges from exemptions for short burns of small amounts of nonhazardous wastes in transportable incinerators to very stringent criteria pollutant control. Offsets may also be required in areas that are in nonattainment for NO_2, such as the South Coast AQMD (SCAQMD) in California; or nonattainment for ozone, such as the New York metropolitan area.

Most of the relevant regulations specify an emissions rate or level that may not be exceeded or that will trigger corrective or punitive measures. For example, the PSD NOx trigger is 100 tons/yr for new sources. By contrast, the nuisance rules are catch-all rules that seek to prevent injury or annoyance to any considerable number of persons or to the public. Although these nuisance rules do not appear aggressive or overbearing, the regulatory power of the public cannot be overstated. Public opposition can be more effective in stalling an incineration project than federal, state, or local regulation. Indeed, public opposition can stall a project already approved and permitted by the authorities. The process for granting permits to install and operate usually has provisions for public input, especially for waste treatment projects. Permitting can easily become the most expensive and time-consuming part of deploying any incineration treatment project.

Monitoring Requirements

The operation of the Shirco unit will be required to monitor CO and NO_x emissions. The NO_x requirements will likely come from state and local AQMD regulatory pressure for NO_x control and, in some areas, for ozone reduction. Continuous monitoring will likely be required. The CO requirement will stem from the federal and state incinerator regulations calling for continuous monitoring. State and local AQMD emissions limits also exist for CO.

Incineration treatment systems are also required to continuously monitor such variables as combustion temperature, waste feedrate, and an indicator of combustion gas velocity. Further, if the waste contains sulfur, scrubbing and SO_2 monitoring may be

required by the air regulations. Other sampling, analysis, equipment monitoring, and inspections may be required as outlined in 40 CFR 264 Section 347 and 40 CFR 761.70.

Incineration systems are required to observe blowdown discharge and furnace-ash disposal requirements during operation and at closure. Unless the operator can demonstrate according to 40 CFR 261.3(d) that the furnace ash removed from the incinerator is not a hazardous waste, he must manage it in accordance with the applicable requirements of 40 CFR Sections 262 through 266. Under TSCA, if the furnace-ash PCB concentration is >2 ppm it still is subject to the appropriate provisions of 40 CFR 671. Even for nonhazardous discharge, local water-quality board regulations, as well as federal and state regulations, will likely be enforced either as "applicable" or as "relevant and appropriate". Further guidance on these regulations are available in CERCLA Section 121(d)(2)(A) and (B), as well as 40 CFR Section 35.

Waste Characteristics and Their Impact on Performance of the Technology [19]

Based on the evaluation of the technology performance discussed previously, information on both the physical and chemical characteristics of the waste matrix is necessary to determine the suitability of that waste for thermal processing using the Shirco technology and the possible need for waste preparation and pretreatment.

Preoperations waste-feed characterization and laboratory analysis, and pilot or bench-scale testing including thermogravimetric analyses (TGA) are mandatory in order to define the waste feed matrix and its impact on the Shirco unit. The unit has pretreatment and waste-feed-preparation requirements, metallurgical requirements and/or limitations, potential design limitations particularly in the offgas treatment section, and operating requirements, all of which are impacted by the waste matrix.

Table 2 presents a range of waste characteristics suitable for processing in the Shirco unit. In order for specific-site-waste matrices to conform to these waste characteristics, preprocessing may be required. This includes sizing, classifying, screening, dewatering, soils blending, and/or lime addition prior to processing to ensure a solid/semi-solid matrix with characteristics within the treatment range of the unit. Pure liquids can also be processed if blended with a suitable carrier, such as soil or vermiculite, to form a semi-solid waste matrix. Additional materials handling discussions are presented in a later subsection.

Table 2. Applicable Range of Waste Characteristics

Characteristics	Applicable Range
Morphology	Soil/solid Semi-solid Oily-sludge/solid
Particle size (diameter)	5 microns - 2 in.
Moisture content	0-50 wt% (no free liquids or free-flowing sludges)
Density	30-130 lb/ft3
Heating value	0-10,000 Btu/lb
Organics (including POHCs)	0-100 wt% (determined by preoperation testing)
Chlorine	0-5 wt%
Sulfur	0-5 wt%
Phosphorous	0-300 ppm
pH	5-9
Alkali metals	0-1 wt%
Heavy metals	0-1 wt% (determined by preoperation testing)

Physical Characteristics

Physical characteristics of the waste feed matrix determine the pretreatment and preparation required to produce a waste feed that is acceptable to the Shirco unit. Key physical characteristics include morphology, particle size, rheology, moisture content, density, and heating value.

Feed material can be blended to reduce free liquids or to mitigate other incompatible characteristics (such as unsuitable pH or low heating value), and can be pretreated with size reduction equipment to allow most feeds to be processed. Feedstocks may require screening, size reduction, and mixing. Pretreatment equipment typically represents 10% of the system costs. ECOVA requires that feedstock materials be tested in their laboratories in order to identify any physical or chemical pretreatment and preparation requirements.

Morphology, Particle Size, Rheology, and Moisture Content—

The physical state of the waste matrix is a key parameter in the successful operation of the Shirco unit. Waste matrix pretreatment and preparation activities prior to feeding the unit will be affected by the extent to which the waste matrix is a soil, solid, sludge, slurry, liquid, or a combination of these; its moisture content; as well as any associated rock,

clay, scrap metal, and other extraneous materials. These physical characteristics will also impact on the performance of the primary combustion chamber.

Liquids not encapsulated by the feed — that is free liquids or free-flowing sludges — and solids sized below 5 microns, cannot be contained on the conveyor belt; they will pass through the belt's screen openings (the belt is fabricated of woven metal strands). High-moisture-content feeds will also require additional electrical-power input to overcome the heat sink effect of the moisture. Liquids that are capable of being contained for short periods can be processed, since liquid components will be volatilized within three minutes, after exposure to the infrared rods.

Materials greater than 2 in. or less than 5 microns cannot be processed by the Shirco system due to various considerations. One constraint is the height of the bed on the conveyor, which is restricted both by the mechanical design of the unit's feed system and by thermodynamic considerations. On materials greater than 2 in. or clumpy sludge-like materials, diffusion of contaminants through the particles and through the bed to expose contaminants to the infrared heat is diminished. In addition, at less than 5 microns there is the possibility of very light fines being generated that would be carried through the system and possibly cause an overload on the emissions control system or problems with the ash handling system. Except for fines, the smaller the feed material diameter, the shorter is the residence time requirement.

The cakebreaker device and conveyor belt present mechanical stress limitations that result in the determination of a 100 ton/d optimal processing design. Material feed size limitations therefore cannot be eliminated by design changes. Conveyor belt widths and lengths already have been design-optimized and cannot be exceeded. Material larger than 2 in. physically can pass by the cakebreaker, but will not be exposed thoroughly to the heat and thus will not be fully detoxified.

Density—
Unit capacity, as measured on a weight basis, will be determined by the density of the feed as it relates to the volume of waste that is excavated and the volume of waste that can be effectively transported through the primary combustion chamber on the conveyor belt at a maximum bed depth of 2 in.

Heating Value—
Heating value of the feed affects both feed capacity and energy consumption of the Shirco unit. At high heating values, the electrical power input to the primary combustion chamber can be reduced, or eliminated if autogenous combustion similar to the Peak Oil operation [1] is occurring.

Conversely, at low heating values, fuel oil can be added to the waste to increase the heating value to a level that will accommodate the energy balance and maximum electrical power input of the primary combustion chamber.

Unit Operations—
The pilot-scale unit employs manual feed preparation and handling that minimizes the effect of unsuitable waste-matrix physical characteristics on the unit's operation.

Based on the full-scale operations at Peak Oil [1] and Florida Steel [4-6], many of the operations problems were attributable to these physical characteristics discussed above. Improperly prepared oily-waste-sludge at Peak Oil had a severe impact on all aspects of materials handling at the Shirco unit. Once a proper screening device (power screen) was installed, the overall operation of the unit improved. Initial operations at Florida Steel were impacted by a PCC conveyor-belt pore-space that was larger than the pilot-scale PCC conveyor belt, which allowed the fine Florida sand to sieve through the belt and overload the fines collection system. Once the belt was replaced with a belt that matched the feed's particle size, the overall operation of the unit improved.

Chemical Characteristics

The chemical characteristics of the waste feed define the levels of contaminants and chemical environment that is imposed on the unit. Key chemical characteristics include: organic and POHC species and concentrations, halogens, sulfur and phosphorous, pH, alkali metals, and heavy metals. These characteristics will impact on the Shirco unit design and operation as follows:

- Feed preparation requirements, including pH neutralization and chemicals stabilization.
- Combustibility of the waste feed and destruction of the POHCs.
- Corrosion prevention requirements, and metallurgical and refractory considerations.
- The type and efficiency of the air-pollution control system and slagging potentials through the unit.
- Furnace-ash storage and disposal requirements, and scrubber-water treatment and disposal requirements.

Once the unit design and heat- and mass-balance have been defined, unit operating conditions in the

primary and secondary combustion-chambers provide environments consistent with applicable incineration standards to ensure (1) oxidation of most organic contaminants to non-toxic products, (2) acceptable stack emissions, and (3) acceptable levels of organics, POHCs, and PICs in the furnace-ash and scrubber-water effluent. Inorganic contaminants, including halogens and sulfur, alkali metals, and heavy metals are not necessarily detoxified and can interfere with or adversely impact either the environment or the performance of the Shirco unit.

Halogens, Sulfur, Phosphorous, and pH—
Acid gases are formed when waste feed containing chlorine, fluorine, bromine, sulfur, and phosphorous are thermally treated. The presence of halogens, sulfur, and phosphorous in the waste and the subsequent formation of acid gases result in:

- Corrosive attack of refractory and metal components throughout the unit.
- Increased costs for acid gas neutralization.
- Possible waste pretreatment for halogen concentration reduction and pH adjustment.
- Formation of chlorides (particularly with heavy metals such as lead) causing particulate removal problems at the air-pollution control system.

pH adjustment and the sulfur and chlorine contents of the feedstock are important unit design and operating considerations. The high processing temperatures combined with acid materials can result in the need for expensive alloys for the belt and rollers, and can reduce the operating life of the components in contact with the acids. High organic chlorine loads may exceed the air pollution control equipment design limitations. A pH of 5 to 9, and chlorine and sulfur contents not exceeding 5%, are recommended. Fluorine and phosphorous concentrations of even several hundred ppm in the feedstock will result in eventual deterioration of the silicate-based refractory ceramics, although this is a common problem inherent in all thermal technologies.

Based on the above, the current Shirco unit design places maximum limits on the halogen and sulfur contents. As a result of problems encountered at Peak Oil with high lead levels and particulate emissions, the emissions control section of the Shirco unit that was employed at the Peak Oil site [1] has been replaced with a high-efficiency Calvert scrubber that is designed to provide improved particulate-removal efficiencies over a wider range of gas flow and fines loading. The Shirco unit that was employed at the Florida Steel site [6] incorporates a crossflow horizontal scrubber that is similar to the original system employed at Peak Oil. During initial trial-burn runs [5], the high chlorine levels in the feed resulted in high particulate emissions. The current TSCA permit for the OH Materials unit specifically limits the chlorine concentration in the feed to 0.9 wt%. Blending of the feed was employed to meet this specific standard.

Alkali Metals—
Sodium and other alkali metals (such as potassium) in the waste can create the following problems in the Shirco unit:

- Deterioration of the silicate-based refractory.
- Formation of a sticky, low-melting, fine-particulate (particularly sodium), causing possible fouling or slagging problems at the air-pollution control system.

Preoperations laboratory analysis and testing are required in order to assess the extent to which alkali metals may be a problem. As in other incineration processes using silicate-based refractories, total alkali-metals concentration of less than 1 wt% must be maintained, usually through feed blending.

Heavy Metals—
Heavy metals in the waste feed are not destroyed by combustion. Although the majority of the heavy metals concentrates in the furnace ash, some metals, (particularly lead) will volatilize. Depending on the initial concentration in the feed, these metals may cause reductions in the particulate removal efficiencies of conventional venturi-scrubber systems, such as the design employed at Peak Oil [1]. As discussed above, a high-efficiency venturi scrubber that can operate over a wide range of gas flow and particulate loading is mandatory for a transportable Shirco unit. Preoperations testing and analysis is also required prior to commitment at a site to define the waste matrix and the effect, if any, that heavy metals concentrations may have on the ability of the unit to meet applicable particulate and emissions standards, as well as scrubber water-effluent quality-requirements. In general, heavy metals concentrations less than 1 wt% can be processed in the Shirco unit.

With the majority of the heavy metals concentrated in the furnace ash, the storage and disposal of the furnace ash requires adherence to the RCRA hazardous waste standards as defined by the EP Tox and proposed TCLP toxicity characteristic standards. Based on the results obtained in the Peak Oil and Demode Road SITE demonstrations [1,2], there is no evidence of reduced mobility of heavy metals as a result of the Shirco thermal treatment as compared to the original waste-feed.

Ranges of Site Characteristics Suitable for the Technology [19,22]

Site Selection

The selection of the processing and thermal treatment site is based on the following criteria:

- The site ideally needs to contain sufficient land area to provide a concentric ring of unoccupied space as a buffer zone between active storage, treatment, and disposal areas, and the nearest area of human activity. Vegetation, topography, distance, and artificial barriers all are potential means to screen facility activities from line-of-sight exposure to commercial and residential areas.
- Access roads must be available and capable of supporting the 60,000-lb transportable incinerator trailers and heavy earth-moving equipment, such as front-end loaders.
- Accessibility to the waste feed material must be direct and unencumbered, with adequate waste excavation and feed preparation areas.

Climate Characteristics

The primary climatic features that can adversely affect a remediation site are the amount of annual or seasonal precipitation and the incidence of severe storms. Copious precipitation will cause surface runoff and water infiltration through the soil. Runoff, that amount of rainfall that does not infiltrate the soil, depends on such factors as the intensity and duration of the precipitation, the soil moisture content, vegetation cover, permeability of the soil, and the slope of the site. Normally, the runoff from a 10-yr storm (recurrence interval of only once in 10 yr) or annual spring thaw, whichever is greater, is containable by the site's natural topography. If not, berms, dikes, and other runoff control measures must be constructed to modify the site.

ECOVA claims that the Shirco system has no climatic limitations, except those affecting the feedstock, such as frozen ground or interference with material excavation. This limitation can be minimized by scheduling excavation of the material during a temperate period and then covering the waste prior to operation. The Shirco system is provided with a winterizing package to permit it to be operated in cold climates.

Geological Characteristics

The main geological constraints that can render a site unsuitable for a hazardous-waste thermal-treatment facility are historical or predicted seismic activity, landslide potential, volcanic or hot spring activities, and the general load-bearing considerations associated with the siting of heavy equipment on potentially fragile geological formations.

Topographic Characteristics

The main topographic constraints are susceptibility to flooding, erosion, and offsite drainage runoff. The site will need sufficient area for the construction of a runoff holding pond (or diversion to an existing holding pond) to retain surface runoff, which may contain hazardous substances in solution. Because of the holding pond and flood protection criteria, construction in flood plains normally is not acceptable.

The site must be graded and leveled for equipment placement. Attention should be given to the overall site slope, which should be compatible with the area's natural topographical slope for drainage.

Site Area Requirements

The maximum size of a trailer-mounted, truck-transportable incineration-system is governed mainly by over-the-road size and weight limitations, which vary from state to state. In general, size restrictions are a length of 45 ft, width of 12 ft, height of 12 ft, and weight of 64,000 lb.

The main components of the Shirco 100 ton/d system are housed in five over-the-road trailers. The primary chamber is permanently mounted on 2 trailers; the secondary chamber and offgas handling system is permanently mounted on 2 additional trailers; and the fifth trailer contains the control room, laboratory, and administrative offices. In addition to the above are: a spare parts trailer, a decontamination trailer, a feed-materials staging area, an ash handling area, and water treatment facilities. A parking area and access roads are also required. The entire site is further defined by health and safety considerations and composed of three separate zones, as follows:

- Exclusion or hot zone: This includes the actual area of contamination and has the greatest potential for employee exposure. The exclusion zone includes the entire incineration operation, including the feed-preparation and feed-storage areas, the ash conveyor and storage areas, and the emission control system. Contaminated materials are stored and handled in the exclusion zone.
- Contamination reduction zone: This zone surrounds the exclusion zone and acts as a clean "buffer" zone. This zone includes contamination-reduction corridors where personnel and equip-

ment are decontaminated prior to entering the support zone area.

- Support or clean zone: This is the zone surrounding and outside of the other two zones. The support zone is a non-contaminated area where support operations are conducted. Support operations may include office and control-center operations.

Based on the above, the site design for the 5 main component trailers requires a concrete pad of approximately 10,000 to 15,000 ft2, dimensioned according to the design layout of the unit and the site's physical constraints.

The feed-preparation-area design is preferably a concrete pad whose dimensions are dependent on the selection (as required) of a suitable carrier material, the selection of fuel additives to increase Btu value, and other handling issues (dewatering, crushing, etc.). The pad is provided with curbs around the perimeter. The joint between the curb and the slab is sealed so the pad can be washed without allowing contaminated soil or water to escape. If required by state or local authorities, or by site-specific environmental conditions, a building can be designed to contain fugitive odors and vapors and to protect the feed matrix, operating equipment, and instrumentation from extreme environmental conditions.
The ash storage area is typically on a 100x100-ft pad surrounded by a 3-ft berm to prevent surface runoff. The area is usually graded to provide drainage with a berm containing straw filter breaks. The base of this area is usually a 2-in. layer of asphalt to act as the water-proof membrane. The ash is discharged from the unit onto a conveyor. It is then conveyed to ash bins, pulled onto a truck, and then hauled to the storage area and placed into the appropriate covered isolation-area.

Should the ash not automatically qualify as a delisted waste, the staging and sampling process would be implemented. Estimated turnaround time for the sample results is 24 h. As sample results become available, the ash would be backfilled or reincinerated as appropriate.

The other equipment and ancillary facilities can be placed on graded and graveled areas. An area of approximately 30,000 ft^2 may be required to accommodate the above.

The complete system, exclusive of the waste site, can be assembled on a total site area of 40,000 to 45,000 ft^2, which is equivalent to an overall plot dimension of 150x300 ft.

Site Utility Requirements

The transportable Shirco unit has been designed to be a self-contained and stand-alone unit. It is self supporting, but requires site preparation as discussed above. Utility requirements include the following:

- A continuous water supply. If city water is not already available, a well or other external supply (such as water tank trucks) must be in place in order to furnish water to the scrubber system. A recirculation system will be used to minimize the scrubber water usage. The water for this purpose is not required to be potable; however, good quality water is required, low in suspended solids, and not brackish. The SITE demonstration results (Appendix C) illustrate and reinforce the need for good quality water. High calcium and magnesium sulfates and chlorides appeared to contribute to the excessive salts content and overloading of the Peak Oil scrubbing system [1]. Organic contaminants in the tank-truck water-supply at Rose Township [2] were also evident in the stack gas. Sixty to seventy gpm generally is required; 10 to 30 gpm blowdown typically must be disposed of, after suitable treatment to accommodate appropriate water discharge standards.
- Electrical service of 2,000-kVA, 480-V, and 3-phases is usually taken from a local utility line to a substation, and converted to 15-amp, 120 V, 1-phase service. The 480-V service is used as the power source for the PCC and other large-electric-demand users, such as the ID fan and pumps. The 120 V service is used for ancillary systems and site needs, as required. If electrical power is not available from a local utility line, portable diesel-powered generators are required.
- Propane or natural gas service, equivalent to 6.2 M Btu/h.
- Water treatment chemicals, as required.
- Fuel oil for feed Btu improvement, as required.

Material Handling Required by the Demonstrated Technology

The feed preparation section of the system is the key to the successful operation of the Shirco unit. The feed must be properly prepared to meet the design requirements of the unit. The feed weighing and conveying system will be affected by the waste's physical and handling properties. Feed preparation to

achieve the proper size and consistency is a direct function of the matrix's characteristics. Regardless of whether the system is designed and provided by the unit's operator or by Shirco, preoperation analyses and materials-handling investigations must be conducted to ensure the successful application of the myriad of materials-handling equipment and processes to the specific-site waste-feed matrix.

The Shirco unit is designed to process a range of soils, solids, and semi-solid sludges and slurries. Waste can be preprocessed by dewatering, soils blending, and/or lime addition to ensure a solid/semi-solid matrix. Pure liquids can also be processed if blended with a suitable carrier to form a semi-solid matrix.

Site Excavation

Soils and Solids—
Excavation activities would normally be carried out by bulldozers, front-end loaders, and/or other conventional excavation equipment. The excavated material would be moved to the processing area either directly with front-end loaders, or via transfer truck or conveyor. The types of excavation and transfer equipment would depend on the type of material and the layout of the site. This type of excavation was conducted at Florida Steel [4] and LaSalle Electric [11].

Semi-Solid Sludges—
Semi-solid sludges must be stabilized to a soil/solid state by mixing with adjacent oils or other suitable materials, such as sand and/or lime. Excavation activities then can proceed as defined for soils and solids.

Slurries and Lagoons—
The content of slurries and lagoons must be dewatered, treated as a semi-solid sludge, and then excavated as a soil/solid. The excavation of a waste oil lagoon was conducted at Peak Oil [1].

Feed Preparation

The feed preparation system, as discussed above, is a direct function of the waste matrix characteristics and their relationship to the requirements of the unit for feed size and consistency.

The feed preparation system at Florida Steel [4] (where the waste was a diverse mixture of soil/solid constituents ranging from environmental control dust to car bumpers and railroad ties) consisted of a grizzly classifier, a magnetic separator, a jaw crusher, a roll crusher, a pugmill, a plastic shredder, a wood chipper, a weigh belt feed, and associated conveyance systems.

All of the feed preparation equipment and the excavated waste was covered and protected from the weather.

The feed preparation system at Peak Oil [1] processed the oily sludge from a dewatered lagoon that was stabilized with lime and sand and then bulldozed to a staging area where a power screen shredded, screened, and aerated the waste to a consistency and size required by the Shirco unit. The screened waste was staged, fed to a weigh belt feeder by a front-end loader, and conveyed to the Shirco unit's feed module. All of the feed preparation equipment and the excavated waste was unprotected from the weather. The conveyors were covered, and the PCC and SCC systems of the Shirco unit were enclosed under a temporary tent arrangement.

The feed preparation system at LaSalle Electric [11] used the same power screen and equipment arrangement as discussed above for Peak Oil. (The Shirco unit at LaSalle Electric is the same unit that was employed at Peak Oil.)

Ash Handling

When the furnace ash reaches the end of the conveyor belt through the PCC section of the Shirco unit, it is quenched with water sprays and is removed from the unit through a series of screw conveyors. The ash then is transported to the ash storage area where it is sampled for analysis before it is placed in bulk storage or reprocessed (based on the analytical results and applicable regulatory standards). As discussed in the following subsection describing commercial operations at Peak Oil, the moist furnace ash, which tends to clump and agglomerate, can cause materials handling problems. If insufficient quenching is employed, dusting and odor problems can occur. Proprietary modifications were made to the OH Materials Corp. commercial unit [4,5] that addressed these problems. Careful control of the ash quench water and exit temperature of the furnace ash are required to minimize clumping and agglomeration and, at the same time, keep dusting and odor problems under control.

Commercial Operations

Peak Oil—
The Peak Oil waste-feed matrix (commercial-scale unit) was a solidified sludge that was prone to agglomeration and resulted in clogging, bridging, and jamming of the original crusher equipment.

Prior to the SITE demonstration test, the crusher was replaced with a power screen that shredded, screened, and aerated the feed to a consistency and size that was accommodated by the Shirco feeder. This modification improved the feed system's reliability.

Conveyor system problems included spillage of waste feed, waste material sticking to the conveyor belt, and an inability to adjust the feedrate from the conveyor to the unit's feeder system. Modifications to the conveyor system included the addition of a "skirt" below the conveyor to catch spillage, a conveyor scraper that minimized sticking, and a variable speed controller and revised motor arrangement that provided feedrate control. Although the overall conveyor system provided waste feed to the Shirco unit, preoperation analyses and materials handling investigations would have resulted in a system design that was more adaptable to the waste-feed matrix encountered at the Peak Oil site.

The screw augers and their motor drives experienced continuous clogging and overload problems. The feed system required continuous attention by operating personnel and the addition of "bridgebreakers" to reduce the bridging of the agglomerating waste feed. As is the case with the feed preparation section, the design configuration of the feed inlet section and the screw augers should have been specific to the waste feed matrix. The flight pitch, height, and gear reduction of the feed auger should have been designed based on preoperation investigations and waste-feed matrix analysis.

The screw augers were designed with reversing capability, and the motor drives were designed for a 50% overload-based on adequate feed preparation. If the feed is not properly crushed, screened, and prepared, the augers' materials-handling efficiency decreases. Bridging and plugging problems (particularly with an agglomerating feed matrix) occur, causing significant overload and eventual burnout of the motor drives. Again there is a need for preoperation testing and evaluation of the waste feed matrix vis-a-vis the entire feed handling system.

The ash removal system required frequent maintenance and downtime. The cooling screw and incline screw were continually clogging and breaking, and their motors overloaded and burned out. When the screws were reversed to dislodge material under the screw flights, breakage and further abuse of the motors would occur. Significant dusting and odor problems also were evident in and around the ash removal system.

In addition to the design limitations discussed above, the intermittent failure of the original feed preparation system (i.e., crusher and screen) to deliver a consistently sized waste feed allowed unprepared materials to enter the unit. The unprepared feed caused occasional jamming and blockage of the ash discharge system. Plugging of the incline screw also was caused by the buildup of ash in the discharge chute and improper control and monitoring of the ash quench facilities.

In early 1987 the cooling screw and incline screw design were changed; larger motors and gear reducers were installed to further correct overload, plugging, and motor burnout. A viable solution to future designs could entail the installation of a larger-diameter screw operating at lower rpm than the small, high-rpm screw conveyor, which proved to be a high-maintenance item subject to substantial wear over a short period of time.

Another alternative, a wet system design, does not appear to be viable; it entails substantial equipment maintenance and environmental concerns when dealing with an abrasive ash solution.

The dusting problems that were continually present at the ash removal system can be minimized by careful control and monitoring of the ash, quench water flow, especially during start-up or periods of interrupted ash discharge. Potential odor problems are inherent to the quench operation and will vary in severity with the waste material. In any event, unit and site setup should take into account these potential health problems; ash removal and storage should be located for minimal exposure to operating personnel and traffic.

In addition to the feed-inlet and ash-outlet systems, problems also occurred with conveyor belt failures, cakebreaker failures, and belt conveyor system maintenance.

A transportable unit moving from site to site will be subject to metallurgical degradation if one assumes that a single alloy will be adequate for all applications. Knowledge of the physical and chemical characteristics of the feed is essential in selecting appropriate alloys. The original belt installed at the Peak Oil site was provided with several test sections of various alloys. Because of the nature of the feed material and minimal knowledge of its chemical characteristics, this approach was selected so that, if belt failure did occur, an appropriate alloy then could be installed. Due to the chlorine and sulfur content of the initial feed material, certain test sections did fail and were replaced with the standard Type-314 stainless steel alloy. A properly cured Type-314 stainless steel belt provided reliable service through the completion of the project. Belt specifications and subsequent construction materials may require occasional

changes due to the unique characteristics of a particular feed material.

As with the belt, metallurgical considerations for the cakebreakers are dictated by the physical and chemical properties of the feed material and subsequent furnace environment. Corrosion problems can be resolved through the selection of an appropriate alloy for the feed material characteristics. At Peak Oil, the original alloy was not compatible with the waste feed. In addition, possibly due to the mechanical failures in feed screening and crushing noted earlier and to the resultant feeding of unsized or nonspecification waste material, the cakebreakers also may have been subject to severe stress when these articles were encountered, causing cakebreaker failure.

Although problems were encountered with the belt conveyance system, it appears that the roller bearing specifications do not require any changes. Proper attention to lubricant choice and a rigorous maintenance schedule are required to ensure a long roller-bearing and belt-conveyance-system operating- life.

Florida Steel--
The Florida Steel waste matrix, whose characteristics were suitable for processing by the Shirco system, was stored in an onsite vault that was protected from the weather. This waste matrix, along with the extensive feed-preparation equipment onsite, resulted in a waste feed to the Shirco unit that met all of the physical characteristics required for efficient materials-handling and unit operation.

OH Materials indicated that several problems were encountered, but it only elaborated on the conveyor belt problem [4,6]. The conveyor belt that was originally installed had a larger pore space than the pilot-scale unit, thus allowing the fine Florida sand to sieve through and overload the fines collection system. A new, smaller-gauge conveyor belt was installed that resulted in the satisfactory operation of the unit.

During the final month of operation, the overall operating (or utilization) factor was greater than 90%, which indicates that OH Materials had solved all of its initial problems.

LaSalle Electric--
Discussions with the Illinois EPA indicate that the Shirco unit is operating at an 80%-90% operator factor with few materials-handling problems. The power screen is apparently working well; on occasion, however, large nails or spikes may pass through the screen and cause equipment problems.

These preliminary results are an encouraging improvement over the difficult operations and materials-handling problems that were encountered by this same unit at Peak Oil (exclusive of the newly designed air-pollution-control system and possibly other proprietary design changes).

The contrast between the Peak Oil and LaSalle Electric waste matrices (oily sludge versus dry soil) emphasizes the importance of the initial physical characteristics of the site waste and the efficiency of the feed preparation equipment in producing a satisfactory waste feed to the Shirco unit.

Personnel Issues

Operating personnel for the Shirco unit total 13. This includes 9 process operators; 3 supervisors including a shift foreman, a maintenance supervisor, and an office administrator/clerk; and a project manager. The operations schedule consists of two 12-hour shifts, requiring 3 operators per shift to cover the control room, PCC, and SCC/scrubber sections. Operating personnel are scheduled for an 8-d work period followed by a 4-d rest period. Additional local hires — such as laborers, operating and craft personnel, and materials-handling personnel for soil excavation, feed handling, and ash removal — are site-specific and are not included in the labor profile discussed above.

Personnel are subjected to the standard OSHA requirements for operating moving equipment and are required to wear the proper personal protective equipment dictated by the specific site conditions and contaminants.

Personnel must pass appropriate physical examinations and have completed, and be certified, in EPA-approved hazardous-materials training procedures and protocols.

Tests to Evaluate Applicability and Performance of Technology

As discussed in the preceding subsections, waste characterization and treatability testing are necessary to establish the suitability of the waste-feed and the range of recommended operating parameters for the commercial unit to ensure optimum performance within regulatory requirements. The following discussion addresses the 3 test phases required for the use of a Shirco commercial unit at a specific site. These 3 test phases include:

- Laboratory analysis of waste feed.
- Treatability testing including bench- and/or pilot-scale testing and thermogravimetric analyses (TGA).

- Technical evaluation of commercial operation and monitoring for regulatory compliance.

Laboratory Analysis of Waste Feed

Prior to treatability testing, complete laboratory analysis for the following key physical and chemical properties of the waste feed matrix are recommended:

- Density — to determine feedrate and handling requirements.
- Moisture content — to determine feedrate, fuel consumption, and handling requirements.
- High heating value - to determine feedrate and fuel consumption.
- Non-combustible ash content — to determine volume of furnace ash requiring posttreatment handling and disposal.
- Particle size analysis — to determine materials handling requirements, feed preparation requirements, and particulate control.
- Flash point and viscosity for sludges — to determine materials handling requirements.
- Elemental analysis/composition — to determine C, H, O, N, S, P concentrations for combustion calculations and unit feedrate considerations, and air pollution control requirements.
- Elemental analysis/composition — to determine halogen concentrations (Cl, F, Br, I) resulting in acid gases during combustion, which require stack- gas scrubbing facilities.
- pH — to determine handling equipment maintenance and metallurgical requirements, and need for waste preparation neutralization.
- Metal species and concentrations — to determine alkali metals concentrations (Na, K) for equipment maintenance; heavy metals concentrations for air pollution control, scrubber water treatment and disposal needs; and ash disposal and delisting requirements.
- Organic species and concentrations — to determine materials handling and pollution control requirements, personnel protection needs, and ash and scrubber-water treatment and disposal requirements.
- POHC species and concentrations — to determine spiking and analytical requirements for a trial burn or demonstration test that requires a DRE determination.

Treatability Testing

Treatability testing that includes bench- or pilot-scale testing and TGA analyses, will establish the range of recommended operating parameters for the commercial unit to assure optimum operation within regulatory requirements including:

- Corrosion prevention data
- Feed preparation (pH neutralization, chemicals stabilization) data
- Baseline processing conditions (residence time, temperature, waste layer thickness)
- Furnace atmospheric requirements
- Primary energy consumption estimate
- Ash storage and disposal requirements

The pilot-scale tests and analyses will approximate the commercial operation, and test procedures will be similar to the commercial operation, as discussed below.

Technical Evaluation of Commercial Operating and Monitoring for Regulatory Compliance

In order to verify the performance of the commercial unit and its compliance with governmental regulations on incineration, the following technical and performance criteria and tests must be addressed.

- Physical and chemical characteristics of the feed — including ultimate analysis, high heating value, density, moisture, ash content, and organics and metals concentrations. This will determine the applicability of the technology and the need for specific waste handling and unit modifications. Concentrations of specific physical characteristics such as moisture content and chemical characteristics such as organics (PCBs) and heavy metals concentrations may be monitored during the cleanup on a defined schedule since they can affect the performance and operation of the unit.
- DRE levels for designated POHCs, PCBs, and the presence of PICs in the stack gas. The regulatory standards for POHCs are 99.99% DRE under RCRA and for PCBs is 99.9999% DRE under TSCA. Compliance to these standards are usually established in a 3-d trial burn prior to or at the beginning of a cleanup and are indicative of the ability of the unit to effectively destroy the hazardous contaminants contained in the waste-feed.

- Level of hydrogen chloride (HCl) and particulates (including heavy metals concentrations) in the stack gas. The RCRA standard for HCl in the stack gas is the larger of 1.8 kg/h (4 lb/h) or 99 wt% HCl removal efficiency. The RCRA standard for particulate emissions in the stack gas is 180 mg/dscm (0.08 gr/dscf). Compliance to these standards are usually established in 3-d trial burn prior to or at the beginning of a cleanup and are indicative of the ability of the unit to meet air emissions control criteria.

- O2, CO, CO_2, NO_x, and THC concentrations in the stack gas emissions. Concentrations are usually monitored continuously to meet specified limits for each species and the calculated combustion efficiency (CE) since they are indications of the performance and operation of the unit.

- Level of residual heavy metals and organics, including PCDDs, PCDFs, and PCBs, in the furnace ash. The TSCA guidance level is 2 ppm of residual PCBs in the furnace ash. Additional physical and chemical characteristics of the furnace ash include ultimate analysis, moisture, and ash content. Standards for ash quality are usually pre-established for the particular cleanup and must be monitored during the trial burn and the actual cleanup.

- Mobility of heavy metals in the furnace ash as measured by the Extraction Procedure Toxicity (EP Tox) and the proposed Toxicity Characteristic Leaching Procedure (TCLP) tests. In some cases other performance levels may be set. These standards or performance levels, if required, will be monitored during the cleanup on a defined schedule and determine furnace ash disposal requirements.

- Level of residual heavy metals and organic compounds, including PCBs, PCDDs, and PCDFs, and other physical and chemical characteristics in the scrubber water discharged from the unit, including pH, TOC, TDS, and TSS. Standards are usually pre-established based on POTW requirements and must be monitored during the cleanup on a defined schedule.

SECTION 4

ECONOMIC ANALYSIS

Introduction

The costs associated with the transportable Shirco Infrared Thermal Destruction System are defined by 12 cost categories that reflect typical cleanup activities encountered on Superfund sites. Each of these cleanup activities is defined and discussed, forming the basis for the estimated cost analysis presented in Table 3 for a Shirco transportable unit operation. The costs are based on the processing of 36,500 tons of waste-feed in a commercial unit. This quantity is based on the amount of waste that would be processed if the commercial unit operated at the design capacity of 100 ton/d and a 100% operating (or utilization factor) over a 365-d annual period. However, the costs presented in Table 3 have been adjusted to reflect real-time operations of the unit since periodic shutdowns are required in order to respond to maintenance or operational problems. Costs are given based on operating factors of 85%, 80%, 70%, 60%, and 50%.

Results of Economic Analysis

The economic analysis is based on cost data available from several sources [20,21]. Due to the uncertainties in estimating the actual operating days per year in which the unit will process waste at its stated capacity of 100 ton/d, a series of economic models is presented in Table 3 for operating factors ranging from 85% and 429 days onsite, to 50% and 730 days onsite. Total costs per ton range from $182.13 to $240.79. These costs are considered order-of-magnitude estimates and have an expected accuracy within +50% and -30% as defined by the American Association of Cost Engineers; however, because this is a new technology, the range of uncertainty is probably significantly wider.

Approximately 50% of the costs associated with the Shirco system can be reduced on a cost per ton basis if, for a particular unit operation:

- feedrate can be increased by upgrading unit operating performance or improving initial design
- the operating (or utilization factor) can be increased during the operation of the unit.

In both of these cases, the period of time that the unit will remain at the waste site will be reduced, thus effecting cost savings.

Costs can also be reduced by effecting a basic change in the efficiencies with which activities are executed, thus lowering their respective costs. Productivity can be improved in technical and administrative assistance for permitting and regulatory activities, operating labor, and maintenance.

Other costs — including supplies and consumables; utilities; and effluent/residual treatment, handling, and disposal vary with waste feedrate and will not be affected on a per-ton waste-feed basis. These costs, which account for 20% to 26% of the total costs, can be reduced by optimizing operating conditions.

The Phase II runs conducted at Rose Township [2] indicate that reductions ranging from 26% to 67% in power usage, and by as much as 51% in fuel gas consumption, can be effected by adding oil to the waste feed and reducing operating temperatures in both the PCC and SCC. The oil addition increases the overall waste-feed-matrix heating-value and permits the PCC to operate at a higher feedrate and shorter residence time, and a lower electrical-heating load. Operations at Peak Oil [1], where the waste matrix was primarily a waste oil sludge with a high heating value, were autogenous in the PCC and did not require any electrical heating input.

In order to verify the feasibility, operating parameters, and economics (power and fuel usage, including fuel oil addition) of processing a particular waste feed matrix, the following tests must be conducted:

Table 3. Estimated Costs in $/ton:Site Cleanup Cost Element Breakdown

	Unit Capacity @ 100 ton/d Onstream Factor				
	85%	80%	70%	60%	50%
Site preparation costs (estimate)	13.70	13.70	13.70	13.70	13.70
Permitting and regulatory costs					
Administrative/permitting (10% equipment costs)	9.53	9.86	10.64	11.68	13.14
Trial burns (estimate)	4.11	4.11	4.11	4.11	4.11
Site-specific permitting/Engineering (estimate)	2.74	2.74	2.74	2.74	2.74
Operations procedures/Training (estimate)	2.74	2.74	2.74	2.74	2.74
Equipment costs ($3.2M)					
Startup and fixed costs					
Transportation/setup (estimate)	5.48	5.48	5.48	5.48	5.48
Onsite checkout (estimate)	1.40	1.40	1.40	1.40	1.40
Initial startup/Shakedown (estimate)	4.38	4.38	4.38	4.38	4.38
Working capital (3 mo.)	3.01	3.01	3.01	3.01	3.01
Depreciation (10% of equipment costs)	10.31	10.96	12.52	14.61	17.53
Insurance and taxes (10%of equipment costs)	10.31	10.96	12.52	14.61	17.53
Labor costs	37.39	39.73	45.40	52.97	63.56
Supplies and consumables costs					
Chemicals ($2.00/ton of waste)	2.00	2.00	2.00	2.00	2.00
Oil addition ($1.00/gal)	8.00	8.00	8.00	8.00	8.00
Utilities costs					
Fuel ($5.00/M Btu)	12.00	12.00	12.00	12.00	12.00
Power ($0.10/kWh)	24.00	24.00	24.00	24.00	24.00
Water ($0.80/1,000 gal)	0.58	0.58	0.58	0.58	0.58
Effluent treatment and disposal costs and residuals and waste shipping, handling, and transport costs					
Water ($1.00/1,000 gal) (excludes ash)	0.72	0.72	0.72	0.72	0.72
Analytical costs ($500/operating day)	5.00	5.00	5.00	5.00	5.00
Facility modification, repair, and replacement costs					
Maintenance (10% of equipment costs)	10.31	10.96	12.52	14.61	17.53
Contingency (10% of equipment costs)	10.31	10.96	12.52	14.61	17.53
Site demobilization costs					
Decontamination/demobilization (estimate)	4.11	4.11	4.11	4.11	4.11
Totals, $/ton	182.13	187.40	200.09	217.06	240.79

These costs do not include waste excavation, feed preparation, vendor profit and ash residual disposal.

- Bench-scale tests to determine the feasibility of any proposed pretreatment process.
- A series of waste feed analyses to determine optimum operating conditions.
- A mass- and energy-balance program, allowing the optimization of the technology by matching the operating characteristics of the unit with the characteristics of the waste to be incinerated.
- A series of pilot test burns by the pilot-scale thermal-destruction unit to assure that proper operating parameters can be maintained while meeting regulatory requirements.

Additional cost information is provided in Appendices B, C, and D and summarized in Table 4. For comparison, the results of the economic analysis presented in Table 3 are also provided.

Table 4. Summary of Estimated Costs

Data Source	Unit Capacity, tpd	Operating Factor, %	Unit Cost, $/ton
Brio Site			
Friendswood, TX	150	82	143(a)
(Shirco cost est.) [13]	220	82	119(a)
Lasalle Electric			
Lasalle, IL			
(Haztech proposal) [11]	100	60	300(a)
Florida Steel			
Indiantown, FL			
(OH Materials est.) [4,6]	100	61	<300(b)
Peak Oil			
Brandon, FL			
(SITE Tech. Eval.		80	197(c)
Report) [1]	100	37	416(c)
ECOVA			
Dallas, TX			
(Vendor's claims) [19]	100	85	161-257(a)
Economic Analyses	100	85	182(c)
(Table 3)		80	187(c)
		70	200(c)
		60	217(c)
		50	241(c)

(a) Cost includes vendor profit, and excludes waste excavation, feed preparation and ash disposal.
(b) Cost includes vendor profit, waste excavation and feed preparation, and excludes ash disposal.
(c) Cost excludes vendor profit, waste excavation, and feed preparation and ash disposal.

Basis of Economic Analysis [19-21]

A detailed discussion of each of the cost elements defined in Table 3 is provided in the following:

Site Preparation Costs

The costs associated with site preparation and logistics include advanced planning and management, detailed site design and development, auxiliary and temporary equipment and facilities, water conditioning, emergency and safety equipment, and site staff support. Soil excavation, feedstock preparation, and feed handling costs would normally be included but are not being considered in this analysis due to their site-specific variability. Total site preparation costs are estimated at $0.5M.

Permitting and Regulatory Costs

Administrative/Permitting—
Administrative costs associated with regulatory compliance issues for an incinerator are numerous and varied. The costs that are being accrued under this cost element reflect overall non-site-related regulatory activities. These activities include researching national or regional permit requirements, preparing initial permit applications, and supporting the permit issuance process. Once the final permits are issued, then recordkeeping, inspection, survey response to permitting agencies, and additional reporting activities may be required.

Reporting activities include the preparation of technical support data: the trial burn results, sampling and analysis plan, and quality assurance project plan by in-house engineering personnel; and RCRA/TSCA permit forms by a senior engineering consultant working with in-house staff. Administrative costs associated with reporting activity cover time, travel, and per diem for consultant and in-house staff interfacing with federal EPA officials; and in-house administrative and clerical staff functions. The preparation of the final trial burn report by in-house engineering personnel is also included.

With the size and complexity of the unit influencing these activities, the total administrative/permitting costs are estimated at 10% of the equipment costs or $0.32M. Fifty percent of these costs can be considered time-related and will be affected by the length of time at the site; the remaining costs are one-time costs at a fixed $/ton basis.

Trial Burns—
Under current TSCA regulations, hazardous-waste incineration-facility owner/operators usually are required to perform a trial burn as the final step in obtaining an operating permit.

In addition to the administrative and permitting costs defined above, costs are accrued for the execution of the TSCA trial burn to prove overall system performance.

The costs for such a trial burn include labor and materials for the sampling and analysis activities, travel and per diem for the sampling team, and other miscellaneous costs that may be attributable to the execution of the trial burn, exclusive of administrative support.

It should be noted that these nondepreciable capital costs only are accrued for TSCA trial burn activities; site-specific permit and trial burn activities are considered semivariable operating costs that accrue under the mobilization/ demobilization cost element breakdown discussed below.

Total costs for these trial burn activities are estimated at $0.15M.

Site-Specific Permitting and Engineering Services—
In addition to the TSCA trial burn activities discussed above, site-specific permitting and trial burn activities may be required. Both in-house and consultant technical support and engineering services may be required to support these efforts. Total costs for these site-specific permitting and engineering services are estimated at $0.10M.

Operations Procedures and Training—
In order to ensure the safe, economical, and efficient operation of theunit, operating procedures and a program to train operators are necessary. These associated costs will accrue: the preparation of a unit health-and- safety and operating manual; and the development and implementation of an operator training program, equipment decontamination procedures, and automated management and reporting procedures. Total operations procedures and training costs are estimated at $0.10M.

Equipment Costs

The current costs — for the design, engineering, materials and equipment procurement, fabrication, and installation of the Shirco transportable infrared incinerator on skids — are included as direct costs at $3.20M. These costs include all the subsystems and components installed on their respective skids and trailers, but do not include the costs of the tractors for the transport of the trailers. Waste preparation equipment, ash conveyors, and auxiliary equipment (such as an air compressor or water treatment facilities) are not included.

Startup and Fixed Costs

Transportation and Setup—
The cost of transportation and setup includes disassembly of the unit at its present location and transport to a new location. Present Shirco designs are totally skid-mounted and equipped with hydraulic levelers. The trailers can be moved into place without removing equipment, thus significantly minimizing setup time and costs. Estimated costs are $0.20M.

Onsite Checkout—
Once the unit has been set up, it is necessary to shake down the system to ensure that no damage occurred as a result of disassembly, transport, and reassembly. Estimated costs are $0.05M.

Initial Start-up/Shakedown—
After the incineration system has been fabricated, and operations procedures and operator training have been completed, the overall unit must be initially started and operated to check the mechanical and technical integrity of the equipment and its controls. The unit first must be operated without the use of the infrared rods or the secondary combustion chamber burners in order to check the movement of solids through the unit in a "cold" mode. The unit then must be operated on a nonhazardous feed matrix under a "hot" mode, with the infrared rods and the secondary combustion chamber burners in operation. Overall startup costs are estimated at $0.16M.

Working Capital—
Although the unit is a transportable system, it will require a supply of maintenance materials attributable to a nondepreciable capital cost. Maintenance materials account for approximately one-half of the total maintenance cost, and three-month inventories are usually maintained.

Fuel inventory for the SCC heat source and caustic soda solution inventory for the scrubber's acid-gas-removal operation are also required.

Total costs for maintenance materials, fuel oil inventory, and chemicals inventory are $0.11M.

Depreciation—
Because incineration is a capital-intensive waste-treatment option, the overall costs must include an annualized capital investment cost or depreciation. Equipment amortization is based on a straight-line 10-yr depreciation (10% of equipment costs) at $0.32M/yr.

Insurance and Taxes—
Depending on site location and the specific tax strategy employed for the ownership and operation of the unit, insurance and taxes will vary from 5% to 10% of the equipment costs on a yearly basis. For this analysis, insurance and taxes are estimated to represent 10% of the equipment costs of the unit at $0.32M per year.

Labor Costs

Operating personnel for the Shirco unit totals 13 persons. This includes 9 process operators and 3 supervisors who cover two 12-h shifts (8-d work period, 4-d rest period, 840 h overtime) at $25,000/yr and $35,000/yr, respectively. It also includes a project manager at $45,000/yr. Benefits for the above personnel are estimated at 40% of straight-time wages, and overtime is reimbursed at 150% of the standard wage rate. Per diem is estimated at $100/d per person, and includes lodging, meals, autos, and scheduled trips home.

Additional local hires as laborers, operating and craft personnel, and materials handling personnel for soil excavation, feed handling, and ash removal

are site-specific and are not included in the labor costs.

Based on the above, the total labor costs for the operating personnel of the Shirco unit are $1.16M per year.

Supplies and Consumable Costs

Chemicals—
The main chemical requirement is caustic soda solution for acid gas scrubbing. The use of caustic soda is a function of the HCl loadings based on initial chloride concentrations in the waste feed. Based on a 50% caustic solution, caustic requirements are 2.2 lb/lb of HCl, or $2.00/ton of waste feed, based on 0.15 wt% chloride concentration and a chemicals cost of $0.30/lb of caustic.

Oil Addition—
The heating value of the waste feed matrix introduced into the unit will have a direct effect on the unit feed capacity and electrical requirements of the infrared heating rods. The introduction of diesel fuel or an equivalent oil supplement will increase the overall heating value of the waste feed matrix and provide a means to optimize unit operations. For the analysis, it is estimated that oil is added to the waste feed at a rate of 3 wt% or approximately 8 gal/ton of waste feed. Based on a cost of $1.00/gal, total costs for oil addition are estimated at $8.00/ton of waste feed.

Utilities Costs

Variable operating-cost elements for this unit include fuel, power, and water. They are defined as variable operating-cost elements because they can usually be expressed in terms of dollars per unit flow of waste, and as such, these costs are more or less proportional to overall facility utilization during specific site operations.

Fuel—
The fuel requirements for the unit include natural gas or propane fuel for the secondary combustion chamber heating requirements. Based on SCC heating requirements of 10 MBtu/h and fuel gas costs of $5.00/MBtu, fuel gas costs are estimated at $12.00/ton of waste feed.

Power—
The power requirements for the unit include the electrical requirements for the motors that power the pumps, fans, augers, mixers, and primary combustion chamber belt drive. Also included is the electrical requirement for the PCC infrared rods, which supply the initial combustion heat to the waste feed. One of the factors affecting the electrical requirement of these infrared rods is the heating value of the waste matrix being incinerated. As defined above, oil addition costs are included in the analysis to reflect a possible increase in the heating value of the waste matrix.

Auxiliary electrical requirements for trailer power, site lighting, etc., are minimal and are assumed to be included in the total power needs.

Based on the above, total power requirements are estimated at 1,000 kWh/h. A power cost of $0.10/kWh is employed to reflect potentially difficult and expensive extensions to power sources. Estimated costs are $24.00/ton of waste feed.

Water—
Water use is based on an estimate of the blowdown requirements from the scrubber system, water losses due to evaporation, and carry-over with the stack gas and ash residue. All other water needs are satisfied through the internal recirculation of water from the scrubber system. Estimated water costs are based on water makeup requirements of 50 gpm at a cost of $0.80/1,000 gal or $0.58/ton of waste feed.

Effluent Treatment and Disposal Costs, and Residual and Waste Shipping, Handling, and Transport Costs

Effluent Treatment and Residue/Water Disposal--
Costs will accrue for the disposal of ash in a suitable landfill. Unit disposal costs for landfilling depend on location and on whether toxic metals are present. If toxic metals are present, secure landfilling is required, and disposal costs can exceed $100/ton of waste feed. Ash disposal costs are not included in this analysis.

Scrubber water blowdown after onsite settling and pH adjustment will be routed to a municipal or regional treatment facility if the wastewater meets the treatment facility's specifications. Based on an overall on site and POTW treatment charge of $1.00/1,000 gal, water disposal costs are estimated at $0.72/ton of waste feed.

Analytical Costs

Analyses—
In order to ensure that the unit is operating efficiently and meeting environmental standards, a program for continuously analyzing waste feed, stack gas,

ash, and water quality is required; typical costs are $500/d as conducted for each day of unit operation.

Facility Modification, Repair, and Replacement Costs

Maintenance—
Maintenance materials and labor costs are extremely difficult to estimate and cannot be predicted as functions of a few simple waste and facility design characteristics, because a myriad of site-specific factors can dramatically affect maintenance requirements. Maintenance costs have been estimated at 10% of equipment costs or $0.32M/yr.

Contingency—
In any cost estimate, 10% contingencies is an acceptable factor. Contingency costs are estimated at $0.32M/yr.

Site Demobilization Costs

Decontamination/Demobilization—
With the completion of activities at a specific site, the unit must be decontaminated and demobilized before being transported to its next location. Costs that will accrue to this cost element include the final burnout of residual material in the system, field labor and supervision, decontamination equipment and materials, utilities, security, health and safety activities, and site staff support. Estimated costs are $0.15M.

References

1. USEPA, 1988. Technology Evaluation Report, SITE Program Demonstration Test, Shirco Infrared Thermal Incineration System, Peak Oil, Brandon, FL. EPA/540/5-88/0020. USEPA, Risk Reduction Engineering Laboratory, Office of Research and Development, Cincinnati, OH 45268.
2. USEPA, 1989. Technology Evaluation Report, SITE Program Demonstration Test, Shirco Pilot-Scale Infrared Incineration System, Rose Township Demode Road Superfund Site. USEPA, Risk Reduction Engineering Research Laboratory, Office of Research and Development, Cincinnati, OH 45268.
3. Final Report: Demonstration Test - Onsite PCB Destruction - Shirco Infrared Portable Unit at Florida Steel Indiantown Mill Site, Indiantown, Fla., Report Number 821-86-1, ECOVA Corp., Dallas, TX, Sept. 17, 1986.
4. Technical Paper: Remediation of PCB-Contaminated Soils by Mobile Infrared Incineration, G. J. McCartney and J. E. Burford, OH Materials Corp., Findlay, OH, 1988.
5. Draft of USEPA TSCA Permit to OH Materials Corp. to Dispose of Polychlorinated Biphenyls (PCBs), OH Materials Corp., Findlay, OH, 1988.
6. Telephone communication between Sy Rosenthal, Foster Wheeler Enviresponse, Inc., and George Hay, OH Materials Corp., Findlay, OH, March 14, 1989.
7. Thermal Destruction Unit Demonstration Test Plan for LaSalle Electric Utilities, PCB Abatement Project, Illinois EPA, Springfield, IL, Dec. 988.
8. Remedial Investigation Report, LaSalle Electric Utilities Site, Illinois EPA, Springfield, IL, 1988.
9. Illinois Environmental Protection Agency Operating Approval to Westinghouse HAZTECH, Inc. for use of Thermal Destruction Unit at LaSalle Electric Utilities PCB Abatement Project, Illinois EPA, Springfield, IL, Nov. 23, 1988.
10. Summary of Remedial Alternative Selection, LaSalle Electric Utilities, LaSalle, IL, Illinois EPA, Springfield, IL, Mar. 29, 1988.
11. Telephone communication between Sy Rosenthal, Foster Wheeler Enviresponse, Inc. and Richard Lange, Illinois EPA, Springfield, IL, Mar. 30, 1989.
12. Demonstration Test Report: PCB Destruction Unit, Shirco Portable Demonstration Unit - Infrared Incineration — Twin Cities Army Ammunition Plant, ECOVA Corp., Dallas, TX, Oct. 23, 1987.
13. Final Report: Onsite Incineration Testing at Brio Site, Friendswood, Texas, Shirco Infrared Systems Portable Test Unit, Report No. 846-87-1, ECOVA Corp., Dallas, TX, Feb. 10-13, 1987.
14. Final Report: Onsite Incineration Testing of Tibbetts Road Superfund Site, Barrington, N.H., Shirco Infrared Systems Portable Test Unit, Report No. 834-87-1, ECOVA, Corp., Dallas, TX, Nov. 2, 1987.
15. Final Report: Onsite Incineration Testing of Shirco Infrared Systems Portable Pilot Test Unit at International Paper Co. Wood Treatment Plant, Joplin, MO, Report No. 804-86-2, ECOVA Corp., Dallas TX, May 29, 1986.
16. Summary Report: Onsite Incineration Testing of Times Beach Dioxin Research Facility, Times Beach, MO by Shirco Infrared Systems Portable

Test Unit, July 8-12, 1985", Report No. 815-85-1, ECOVA Corp., Dallas, TX, Aug. 28, 1985.

17. Environmental Performance Evaluation of the Shirco Infrared Incinerator, Dioxin Destruction Demonstration Program, Times Beach, MO., ERT Report No. C-3044-D-1, ECOVA Corp., Dallas, TX, Aug. 29, 1985.

18. Results of the Shirco Infrared Incinerator Synthetic Hazardous Waste Tests, ECOVA Corp., Dallas, TX, May 7, 1985.

19. Vendor Information from ECOVA Corp., Dallas TX, 1989.

20. McCormick, R. J., Cost for Hazardous Waste Incineration, Noyes Publications, NJ, 1985.

21. Mortenson, H., et al., Destruction of Dioxin-Contaminated Solids and Liquids by Mobile Incineration, USEPA, Hazardous Waste Engineering Research Laboratory, Land Pollution Control Div., Releases Control Branch, Edison, NJ, 1987.

22. Statement of Qualifications and Experience, Riedel Environmental Services, Inc., Portland, OR, Dec. 1988.

23. Occupational Health and Safety Act (OSHA), 29 CFR Part 1910 - Subpart Z.

APPENDIX A

PROCESS DESCRIPTION [1,2]

The transportable Shirco Infrared Thermal Destruction System consists of a waste preparation system and weigh hopper, infrared primary-combustion-chamber, supplemental propane-fired secondary-combustion-chamber, emergency bypass stack or diesel generator and auxiliary emergency shutdown system, venturi/scrubber exhaust system, and data collection and control system --all mounted on transportable trailers. The system process flow and the overall test-site layout as employed at the Peak Oil site are presented schematically in Figure A-1.

Solid waste feed material is processed by waste preparation equipment designed to reduce the waste to the consistency and particle sizes that can be processed by the unit's PCC. The equipment must be specified for each site based on the condition of the waste. After transfer from the waste preparation equipment, the solid waste feed is weighed and conveyed to a hopper mounted over the furnace conveyer belt. A feed chute on the hopper distributes the material across the width of the conveyor belt. The feed-hopper screw-rate and the conveyor-belt speed-rate are used to control the feedrate and bed depth.

The PCC is a rectangular box insulated by layers of ceramic fiber. Combustion air is supplied to the PCC through a series of air ports at points along the length of the chamber. The gas flow in the incinerator is countercurrent to the conveyed feed material. Electric infrared heating-elements installed above the conveyor belt heat the waste to the designated temperature (nominally 1,600°F), which results in desorption or incinerator of organic contaminants from the feed. Rotary rakes gently turn the material to ensure adequate mixing and complete desorption. When the thermally treated soil (now referred to as furnace ash) reaches the discharge end of the chamber, it is cooled with a water spray and then is discharged by a crew-auger/conveyor to an ash hopper. Ash analyses will determine whether the ash can be transferred to a storage area or returned to the waste material stockpile for reprocessing.

Exhaust gas containing the desorbed contaminants exits the PCC into an SCC (or afterburner) where propane-fired burners combust residual organic compounds into CO_2, CO, HCl, and H_2O. The SCC is typically operated at 2,200°F and a gas residence time exceeding 2 s. Secondary air is supplied to ensure adequate excess oxygen levels for complete combustion. Exhaust gas from the SCC then is quenched and scrubbed by a water-fed venturi-scrubber emissions-control-system to remove particulate matter and acid gases. An induced draft fan transfers the gas to the exhaust stack for discharge to the atmosphere.

The main unit controls and data collection system are housed in a specially designed van.

An emergency bypass stack is mounted in the system directly upstream of the venturi scrubber for the diversion of hot process gases under emergency shut-down conditions. An alternative emergency design incorporates a diesel-fuel-powdered generator set that is linked to a standby direct-drive induced-draft fan and scrubber pump. This emergency backup system is activated by a power failure or the loss of the primary induced-draft fan.

The process flow concept of the Shirco trailer-mounted pilot-scale infrared incinerator system is used at the Rose Township Demode Road Superfund site is essentially the same as for the transportable facility. Figure A-2 illustrates the pilot facility, for general information purposes only.

Typical design parameters of the primary and secondary combustion chambers of the transportable Shirco unit employed at the Peak Oil site are summarized in Table A-1.

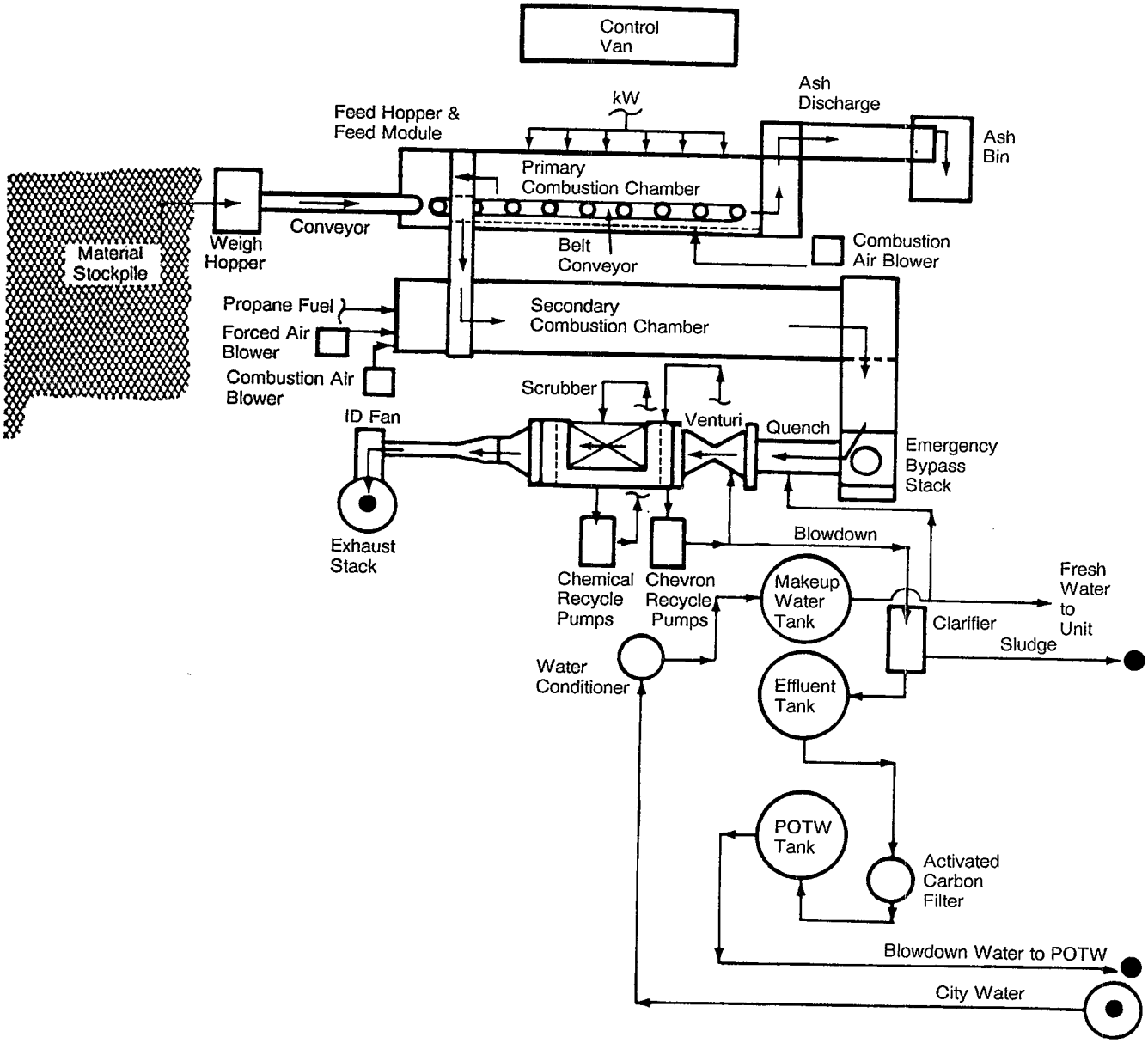

Figure A-1. System process flow and overall test site layout -- Peak Oil.

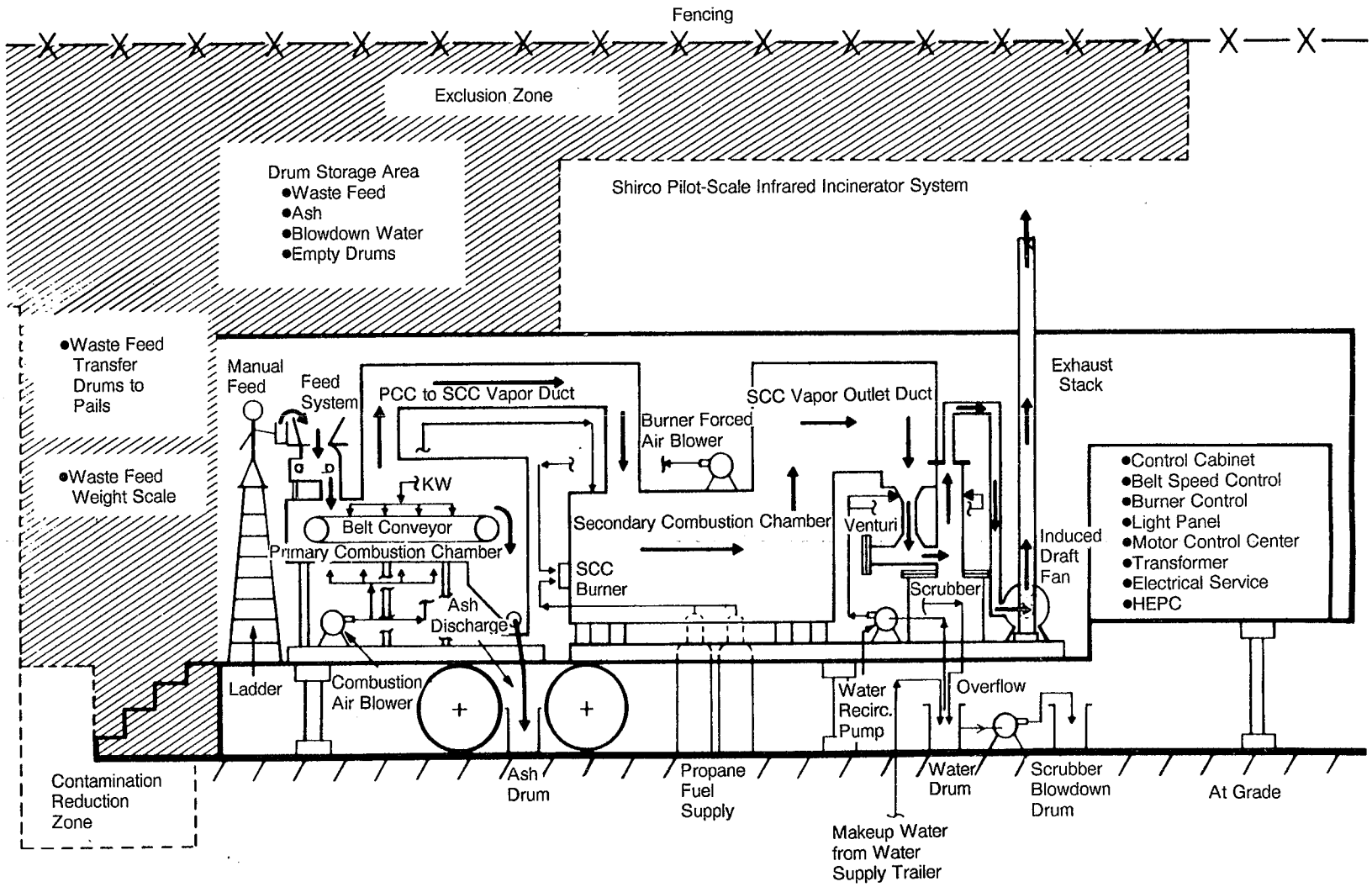

Figure A-2. System process flow for the pilot-scale unit.

Table A-1. Transportable Shirco Unit Design Parameters

Primary Combustion Chamber Specifications	
Shell height, in.	131
Channel height (belt to insulation), inc.	34
Shell width, in.	142
Module width, in.	108
Cavity width, in.	94
Shell length, ft.	61
Effective length, ft	52
Bed depth, in.	0.5-2.0
Residence time, min	5-60
Feed module	300-1,400
Zone A	600-1,800
Zone B	600-1,800
Discharge module	600-1,800
Installed power, kW	
Zone A (3 modules, 9 heating elements per module)	500 kVA
Zone B (3 modules, 9 heating elements per module)	500 kVA
Secondary Combustion Chamber Specifications	
Shell height, in.	131
Height, in.	96
Shell width, in.	121
Width, in.	84
Shell length, ft	83.5
Mixing length, ft	24
Residence length, ft	40
Total length, ft	72
Mixed gas residence-time, s	>2
Operating temperatures, °F	
Mixing section	1,400-2,600
Residence section	1,800-2,600
Exhaust	1,600-2,600
Auxiliary fuel capacity, MBtu/h	6.8

APPENDIX B

VENDOR'S CLAIMS FOR THE TECHNOLOGY [3]

THIS APPENDIX TO THE REPORT IS BASED UPON CLAIMS MADE BY ECOVA EITHER IN CONVERSATIONS OR IN WRITTEN OR PUBLISHED MATERIALS. THE READER IS CAUTIONED THAT THESE CLAIMS AND INTERPRETATIONS OF THE REGULATIONS ARE THOSE MADE BY THE VENDOR AND ARE NOT NECESSARILY CORRECT OR ABLE TO BE SUBSTANTIATED BY TEST DATA. MANY OF ECOVA'S CLAIMS ARE EVALUATED IN SECTION 3 AGAINST THE AVAILABLE TEST DATA.

Introduction

The Shirco infrared thermal destruction process was first designed in 1970 for use as a municipal sludge treatment system. One unit is still in operation in Alaska for sewage sludge treatment. As a result of the need for destruction of hazardous wastes, Shirco constructed a pilot-scale infrared demonstration system in 1984 designed to treat hazardous wastes. The pilot-scale system then was tested at a series of sites as highlighted in Appendix D. The first full-scale transportable system was delivered to Haztech in 1986 for use at the Peak Oil Superfund Site near Tampa, Fla. Other transportable units have been delivered to OH Materials, which has recently completed a cleanup at Florida Steel, Indiantown, Fla.; and to Riedel Environmental Services.

Shirco Infrared Systems, Inc. has recently filed for bankruptcy, and ECOVA Corp. of Redmond, Wa. has purchased a license from Shirco Infrared Systems, Inc. to construct 2 commercial and 2 pilot-scale units. ECOVA intends to construct, own, and operate the infrared thermal destruction systems as part of their overall remediation capabilities. Other licenses are available.

Potential Applicability

The Shirco system has broad process capabilities and can be adapted to a wide range of wastes and material compositions. However, the system can process only solid wastes or sludges with a minimum particle size of 5 microns in diameter that contain a minimal amount of free liquids. The primary combustion chamber conveyor belt cannot contain undersized or free flowing materials or liquids, which will pass through the conveyor screen openings. Waste can be preprocessed, if necessary, by dewatering, soils blending, and/or lime addition to ensure a solid/semi-solid matrix suitable to the process. Pure liquids can be processed by blending with a suitable carrier, such as soil or vermiculite, to form a semi-solid waste matrix, or they may be injected directly into the secondary combustion chamber.

Large objects such as clumped material, rocks, wood, and light metals must be shredded and processed to a maximum particle size of 2-in. diameter because of the clearance between the conveyor belt and the rotary rakes that gently turn the material on the conveyor belt. Oversized material also includes contaminated residuals such as tyvek suits, masks, shoes, and other such shreddable material.

The system provided by ECOVA to treat scrubber water also can be used to treat onsite contaminated and decontamination water. Recovered liquids with heating value can be injected into and burned in the secondary chamber or added to the feed to enhance the feedstock heating value. Spent activated carbon from the scrubber-water treatment system can also be charged to the PCC for thermal treatment.

Table B-1 presents a range of solid/semi-solid waste characteristics suitable for processing in the Shirco

system. Also shown in Table B-1 are the characteristics of waste materials processed by the pilot-scale unit during previous demonstration programs. For example, the waste handling capabilities of the system range from a relatively dry, low-organic-content soil such as that processed at Times Beach, to a sticky, oily sludge typical of a wood preserving waste (creosote/pentachlorophenol). PCB-contaminated soils and sludges also have been processed.

The Shirco system is controlled by an automatic process system that monitors key streams and parameters and adjusts process parameters to ensure adherence to previously established operating conditions. These streams are interlocked and alarmed, allowing manual override if needed. Thus variations in feedstock characteristics immediately will be sensed, and appropriate adjustments made either automatically or manually to ensure that destruction efficiencies are maintained, and emissions levels are not exceeded. There are no uncontrolled emissions during upset conditions.

The transportable systems can be easily transported to the customer's site by either truck or rail, and the entire system can be removed from the site after the cleanup is completed. The system can be operated with either available electrical service or portable electrical generation equipment.

ECOVA now plans to provide full laboratory and pilot-scale unit operations for making site-specific recommendations for processing, and for providing data to support permit applications.

System Advantages

Some of the claimed advantages of the Shirco system over conventional thermal destruction technologies are:

- The Shirco infrared process uses no fossil fuel in the PCC, which greatly reduces total gas flow in the system. This results in reduced requirements for exhaust and pollution control equipment and reduced particulate entrainment that must be removed.
- Gentle handling of the feed material reduces particulate emissions as the feed material passes through the furnace on the conveyor belt. The conveyor belt feed ensures more uniform exposure of waste to heat since consistent flow through the furnace is ensured. This is in contrast to the tumbling motion of a rotary kiln in which the exposure (residence time) of discrete particles is not controlled; the conveyor belt feed also offers an improvement over the possibility of particle carry-through in a fluid bed incinerator. The Shirco system provides intimate exposure of the conveyed waste feed to the heat source by use of "cakebreakers", rotating fingers positioned along the bed length that gently stir the conveyed waste feed material
- The Shirco process uses a distinct type of thermal insulation that can withstand extreme thermal shock, thus allowing the system to be quickly started or shut down. The unit's operating temperature can be changed instantaneously to respond to feed variations, rather than requiring stepwise changes as in other processes. The ceramic fiber insulation also reduces the weight of the Shirco equipment, which enhances its mobility and reduces site foundation load requirements.
- The Shirco system has precise process control of the gas flowrate, residence time, and the multizone temperature profile. As a result of the discrete areas of heat application and zoned temperature control, the system effectively uses the energy value in the waste to reduce auxiliary

Table B-1. Waste Characteristics - General

	Applicable range	PCP/Creosote test	Dioxin tests	PCB tests
Moisture, wt%	0-50	10-50	15-20	1-20
Inerts, wt%	20-100	30-50	95	30-80
Volatile liquids, wt%	0-25	5-23	0	0-15
Volatile solids, wt%	0-100	15-55	5	3-50
Heating value, Btu/lb	0-10,000	2,700-6,200	Nil	0-4,500
Sulfur, wt%	0-4	0.2-1.0	Nil	Nil
Chlorine, wt%	0-5	0.1-3.4	Nil	0.2
Density (lb/ft^3)	30-130	55-75	60-70	80-120
Form	Solid semi-solid	Soil oily sludge	Soil	Soil oily sludge
Hazardous constituent,ppm	0-1,000,000	100,000-250,000	0.25	75-2,800

energy requirements; more than 90% of the energy applied is used efficiently.

- Excess air can be set from 0 to 100% to be compatible with thermal decomposition needs. The starved-air pyrolytic operation volatilizes liquid wastes and frees organics from contaminated soils; the resulting organic gases are destroyed in a gas-fired secondary burner. The reduced air usage of a pyrolytic process also reduces the necessity to handle large gas volumes, thereby decreasing the size of the offgas process equipment, with subsequent reductions in capital and operating costs. A 40% reduction of combustion-air/gas-production is achieved by the use of infrared technology versus other incineration systems that rely on direct fuel oil or fuel gas combustion. Other incineration systems generally require 150% excess air; the infrared system typically requires 50%.
- The unit can immediately be restarted after a process interruption; there is no need to purge the system before restart.
- Countercurrent flow of the air in the Shirco system reduces utility requirements for heating process air.

Some advantages of using the Shirco system for onsite processing are:

- Avoidance of risks and liabilities involved in transporting wastes to offsite facilities.
- Reduced long-term site-contamination risks and liability by providing effective elimination of the hazardous wastes.
- A cost-effective alternative to other onsite disposal options of equivalent capacity.
- Requirements for only temporary permitting, and the capability to be quickly installed and operated without extensive facilities and site preparation.
- If residue materials do not meet destruction specifications they can be reburned.

It should be noted that permanent Shirco installations also are available for ongoing control of waste disposal problems.

System Limitations

Limitations of the system are:

- The system can only process solid wastes or sludges with a minimum particle size of 5 microns that contain a minimal amount of free liquids.
- The system cannot process solid wastes with a particle size greater than 2 in. All large bulk items, such as drums, must be shredded and sized.
- The system cannot process liquids unless they are blended with solid carriers to form a semi-solid feed matrix within the size constraints discussed above.
- Preprocessing of the waste to conform with the above sizing constraints is extremely important. The unit's ability initially to accept the feed matrix through the feed module and pass it along to the conveyor belt is a critical design consideration.
- The system is optimally designed for a nominal commercial throughput of 100 ton/d of waste feed. For large sites, multiple infrared systems would be required to provide throughput comparable to a 400-ton/d rotary kiln or other larger scale transportable incineration system. This would be an impractical and uneconomical alternative to the single unit.

Cost Information

ECOVA's major thermal-destruction competitors are rotary kilns. The infrared technology has a substantial economic advantage over kilns; capital costs are nearly 65% less than for a rotary kiln. As discussed above, this advantage has a limitation as the quantity of material to be processed increases; one 400-ton/d rotary kiln would be equivalent to four 100-ton/d infrared systems. Use of multiple Shirco systems would preclude any capital- cost/operating-cost advantage.

The following cost data was based on the project analysis and computerized database provided by ECOVA Corp. for the operation of a transportable Shirco system.

Table B-2 presents an economic model for a current-case (1989) ideal Shirco transportable unit operation. The cost analysis is based on a 140-ton/d unit capable of treating 30,000 tons of waste feed, at an 85% utilization factor. Based on this economic model, Figure B-1 presents an analysis of thermal treatment costs for the Shirco transportable system based on unit capacity and total waste feed treated.

The project cost for the economic model presented in Table B-2 is $131/ton exclusive of waste feed excavation, feed processing, materials handling and water and ash residual disposal costs. The economic analysis presented in Figure B-1 indicates that treatment costs vary based on unit capacity and tons of material processed; they range from $85 to $175 per ton of waste feed for a 220-ton/d unit, to $167 to $267 per ton of waste feed for a 100-ton/d unit

Table B-2. Economic Model for Shirco Transportable (Commercial) Unit

Basis	
Total tonnage of waste	30,000 ton
Unit capacity:	140 tpd
Operating factor:	85% utilization
Materials handling not included	
Schedule	
Mobilization/demobilization	30 d
Incineration (@ 85% operating factor)	252 d
Total time on site	282 d
Project costs	Cost, $/yr
Equipment mobilization/demobilization	
Daily costs (a,b)	120,211
Misc. one-time costs (c)	155,000
Equipment rental	
Incinerator amortization (d)	515,227
Materials handling	not included
Trial burn sampling and analytical (d)	75,000
Incineration analytical services (f)	126,050
Incineration (a, g)	1,010,177
Utilities and Supplies (h)	
Electricity	605,042
Fuel gas	302,521
Chemicals	60,000
Oil addition	150,000
Water	14,521
Total Project Cost	3,133,749
Profit (i)	783,438
Total price, $	3,917,187
Price, $/ton	131

Table B-2. Notes

(a) Annual costs calculated to an Equivalent Daily Rate (EDR) @ 365 d/yr.

Direct labor

Labor classification	Annual salary, $	Annual straight wages, $	Annual overtime, h
9 operators	25,000	225,000	840
1 site supervisor	35,000	35,000	840
1 maintenance supervisor	35,000	35,000	0
1 clerical	35,000	35,000	0
1 project manager	45,000	45,000	0
Total		375,000	
Benefits (@ est. 0.2387 x straight wage)		89,513	
Overtime wages (@ 1.5 x straight wage)		157,500	

	Annual cost, $
Total Annual labor w/overtime and benefits	622,013
Equivalent daily rate	1,704
Per diem	
Lodging - 13 rooms @ $50/d	237,250
Meals - @ $25/d/person	118,625
Autos - 7 @ $120/wk	43,680
Travel - 1 trip/person/mo @ $600/trip	93,600
Total per diem	493,155
Equivalent daily rate	1,351
Maintenance	
5% of $3M (spare parts - labor provided by operators	150,000
Equivalent daily rate	411
Facilities	
Office trailer	3,600
Break trailer	3,600
Parts trailer (2)	7,200
Telephone, utility, office supplies, etc	20,000
Decon trailer	no materials handling
Safety supplies	44,000
Building	15,000
Total facilities	93,400
Equivalent daily rate	256

Table B-2. Notes (Continued)

	Project technical support permitting		
	2,080 h @ $35/r		72.800
	Travel, expenses -52 wk @ 500/wk		31,200
	Total technical support		104,000
	Equivalent daily rate		285
	Total equivalent daily rate (EDR)		
	Director labor		1,704
	Per diem		1,351
	Facilities		256
	Maintenance		411
	Project technical support/permitting		285
			4,007
(b)	Total daily costs for equipment mobilization/demobilization		
	30 d mobilization/demobilization at $4,007 EDR		120,211
(c)	Miscellaneous one-time costs (estimated):		
			Lump sum cost, $
	Equipment transportation		35,000
	Installation subcontractor services (crane, electricity, etc.)		20,000
	Grading, foundations, utility extensions		100,000
Total			155,000
(d)	Incinerator amortization:		Annual cost, $
	Principal	$3,200,000	
	Annual interest	11%	
	Term	84 mo	
	Monthly payment	$54,792	
	Time on site	282 d	
	Project cost at $54,792/mo x (282/30)		515,227
(e)	Trial burn sampling and analytical costs (estimate)		75,000
(f)	Incineration analytical services:		
	500/d (estimate) x 252 d operation		126,050
(g)	Incineration operating costs:		
	252 d operation x $4,007 EDR		1,010,177
(h)	Utilities:		
	Electricity	1,000 kWh/h @ $0.10/kWh	605,042
	Fuel gas	10 MBtu/h @ $5.00/MBtu	302,521
	Chemicals	$2.00/ton of waste	60,000
	Oil addition	6.25 gal/ton waste @ $0.80/gal	150,000
	Water	50 gpm @ $0.80/1,000 gal	12,521
	Total		1,132,084
(i)	Profit		
	Profit margin of 20% on total project cost of $3,133,749		783,438

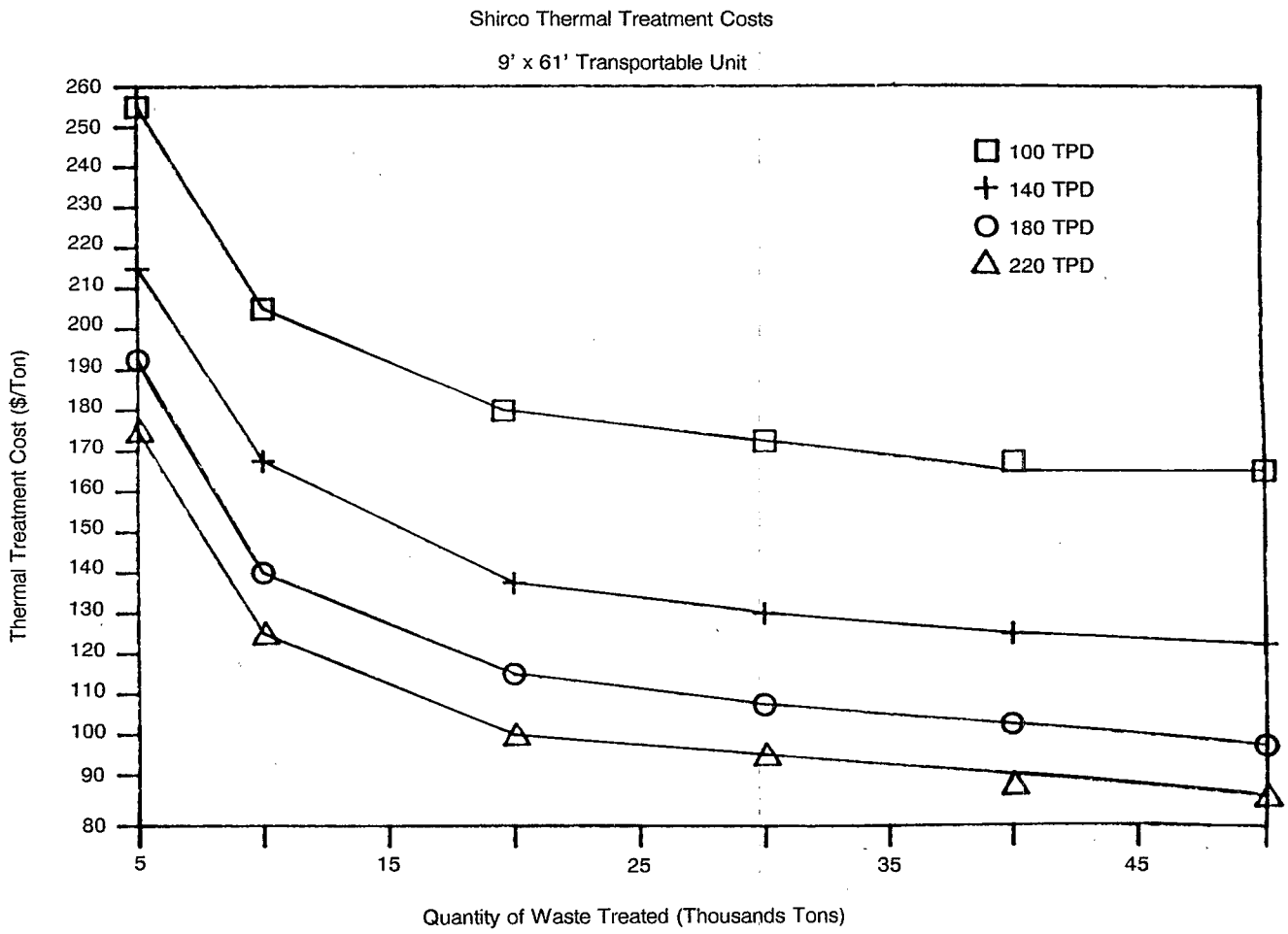

Figure B-1. Shirco thermal treatment costs - transportable (commercial) unit.

APPENDIX C

SITE DEMONSTRATION RESULTS [1,2]

Introduction

Two SITE demonstrations were performed using the Shirco infrared thermal destruction technology: one at the Demode Road Superfund site in Rose Township , MI; and the other at the Peak Oil Superfund site in Brandon, FL. The Peak Oil Superfund site used a transportable commercial unit to thermally process approximately 7,000 tons of waste oil sludge contaminated with PCBs and lead during a removal action by EPA Region IV. The demonstration test was conducted from July 31 to Aug. 5, 1987. The Demode Road site demonstration test was performed from Nov. 2 to 13, 1987 and utilized the Shirco pilot-scale system to process approximately 4,000 lb of soils contaminated with PCBs, heavy metals, and organic compounds. The detailed results of these demonstrations can be found in the Technology Evaluation Reports [7,8]. The result of these two SITE demonstrations are presented in this Appendix as Appendix C-1: Shirco Infrared Thermal Destruction System, Peak Oil Superfund Site; and Appendix C-2: Shirco Pilot-Scale Infrared Incineration System, Rose Township Demode Road Superfund site.

APPENDIX C-1

SITE DEMONSTRATION RESULTS SHIRCO INFRARED THERMAL DESTRUCTION SYSTEM PEAK OIL SUPERFUND SITE [1]

Introduction

Beginning in the 1950s, Peak Oil, an oil rerefiner, operated a used-oil processing facility in Brandon, Fla. Various waste streams from the rerefining operation were dumped into a natural lagoon located on the property. The lagoon quickly became contaminated with PCBs and lead contained in the waste, and as in the majority of Florida's delicate and shallow aquifer systems, the result was contamination of local drinking-water supplies. The U.S. Environmental Protection Agency (EPA) added the site to the National Priorities List (NPL) primarily because of the contamination of groundwater by PCBs.

Because of the existence of an imminent hazard, EPA Region IV initiated and supervised a removal action at the site. The Region contracted with Haztech, Inc., an emergency removal/cleanup contractor, to incinerate approximately 7,000 tons of waste sludge contaminated with PCBs and lead.

In November 1986, Haztech began setting up the transportable Shirco unit. The commercial unit was transported to the Peak Oil Superfund site on 5 separate trailers. It can process between 100 and 200 tons of waste feed per day, depending on feedstock characteristics. The nominal capacity of the unit is 100 ton/d. All of the trailers were designed for overland travel by means of removable wheel assemblies and trailer hitch gear, which allows hauling as a truck-trailer rig over highways.

Once onsite, the wheel assemblies were removed, and the units were field-connected together on suitable poured-concrete pads or existing concrete bases to assemble the complete system. The components were connected together to form the 67-ft-long primary combustion chamber, a 72-ft-long secondary combustion chamber (afterburner), an emissions control system, and a process-management and monitoring-control center.

The SITE demonstration was conducted from July 31 to August 5, 1987 during commercial operation of the Shirco unit.

Feed Preparation

As part of the overall site remediation, the sludge lagoon was drained of water and mixed with sand, soil, and lime to form a conditioned waste soil matrix. The lime, in addition to providing a binding medium for the wet matrix , neutralized the highly acidic wastes in the lagoon, the original site contaminant produced as a by-product of the acid-based oil rerefining operation .

The conditioned soil was transferred from the lagoon to the material stockpile area by front-end loaders; a loader then was used to transfer the waste feed to a power screen. The gross waste feed was loaded onto a tipping reject grid where large rocks and debris were rejected. The bulk of the feed fell through the grid to a belt feed hopper. The waste feed was then passed through a shredding system and conveyed to the vibrating power screen assembly. The shredding system and the vibrating screens provided an aerated and conditioned waste feed sized to less than 1 in. while rejecting larger pieces of rocks, roots, and other materials that were not removed at the tipping reject grid.

The prepared waste feed was then loaded into the weigh hopper using a track loader until a predetermined weight was attained. At that time, waste feed to the weigh hopper was stopped and waste was conveyed from the weigh hopper to the PCC feed hopper by an inclined conveyor belt.

Test Procedure

The SITE program at Peak Oil was conducted from July 31, 1987 to August 4, 1987. During this period, EPA was present to observe the unit operation,

collect data, and document the mechanical operating history of the system and the problems encountered in operating this type of commercial incineration unit.

The overall program consisted of three replicate test runs conducted under the normal operating conditions of the unit. During one of these runs, a duplicate set of samples was taken and analyzed to satisfy rigorous quality- assurance/quality-control (QA/QC) protocols. EPA documented all operating conditions during the test runs and conducted extensive sampling of the solid waste feed, stack gas, furnace ash, scrubber liquid effluent, scrubber water inlet, scrubber solids, and ambient air. QA/QC audit teams from ORD observed and evaluated QA/QC protocols for both the sampling and analytical phases of the test program.

Results

A summary of the SITE demonstration results is presented in Table C-1.1. Detailed results and operating summaries are presented in the Technology Evaluation Report [1]. The following discussion summarizes results and conclusions from the demonstration. Specific operating problems and critical operating parameters are also discussed based on the evaluation of the unit's performance during the removal action at the site.

Characteristics of the Feed

Various waste streams from the rerefining operation of a used oil processing facility were dumped into a natural lagoon on the property that became contaminated with PCBs and lead contained in the waste. As part of the overall site remediation, the sludge lagoon was drained of water and mixed with sand, soil, and lime to form a conditioned waste-soil matrix. The lime, in addition to providing a binding medium for the wet matrix, neutralized the highly acidic wastes in the lagoon, the original site contaminant produced as a by-product of the acid-based oil-rerefining operation.

The concentrations of several metals including aluminum, iron, lead, and zinc exceeded 1,000 ppm due to the metals pickup in the original automotive waste oil and metals concentrations in the rerefining operation sludge. Inorganics such as calcium, magnesium, phosphorous, and sodium reflect the addition of lime and sand to the original sludge lagoon.

Total PCB concentrations ranged from 3.48 to 5.85 ppm and averaged 4.63 ppm. These low PCB concentrations in the waste feed were the result of mixing the original oily waste having up to 100 ppm of PCBs with the PCB-free surrounding soil, lime, and sand so that the resulting material could be handled and processed as a solid waste. No dioxins or furans were detected. Several volatile and semi-volatile organic compounds were also detected, including many aromatic hydrocarbons, which would be expected in the waste oil from the automotive combustion process.

Characteristics of the Furnace Ash

The concentrations of metals and inorganics were similar to concentrations in the waste feed, thus indicating that the mass flow of these species remains with the high mass flow of furnace ash that exits the unit.

Total PCB concentrations ranged from 0.007-0.900 ppm and averaged 0.422 ppm. These values are below the TSCA guidance level of 2 ppm and indicate effective PCB decontamination through the unit. No dioxins or furans were detected. Several volatile and semivolatile organic compounds were also detected and can be considered as possible PICs, although some of these compounds were identified in the waste-feed.

Mobility of Heavy Metals - Comparison of Feed and Furnace Ash

In order to determine whether heavy metals, particularly lead, would leach from the furnace ash produced in the Shirco unit, EP Tox and TCLP tests were conducted to determine the mobility of heavy metals from the furnace ash as compared to the feed.

The EP Tox results for lead in the leachate ranged from 24 to 57 ppm for the feed and 25 to 46 ppm for the furnace ash. The TCLP results ranged from 2. 5 to 35 ppm for the feed and 0.008 to 0.84 ppm for the furnace ash.

A comparison of the EP Tox analyses conducted on the furnace ash and the feed do not show any trend or evidence that indicates reduced mobility of lead from the furnace ash as compared to the feed as a result of the thermal treatment. A comparison of the TCLP analyses conducted on the furnace ash and the feed indicates reduced mobility of lead from the furnace ash as compared to the feed as a result of the thermal treatment. The comparisons also reveal that the concentrations of lead in the TCLP leachates from both the feed and the furnace ash were consistently lower than the corresponding EP Tox test levels on the same samples.

The significant differences in results from these two analytical techniques have been documented in a recent Oak Ridge National Laboratory report

Table C-1.1. Site Demonstration: Summary of Test Results

	8/1/87	8/2/87	8/3/87	8/4/87
Waste feed characteristics				
Moisture, wt%	16.63	16.06	14.24	14.37
Ash, wt%	69.77	69.80	72.40	75.21
HHV, Btu/lb	2,064	1,639	1,728	2,018
PCB, ppm	5.85	3.85	5.34	3.48
Pb, ppm	5,900	4,900	5,000	4,400
Chlorine, ppm	<1,000	<1,000	<1,000	<1,000
Sulfur, ppm	25,300	17,800	18,900	16,700
Chlorine (as HCl), kg/h	<5	<5	<5	<5
Sulfur (as SO_2), kg/h	200	132	138	125
Stack gas				
HCl, ppmv	<0.051	0.60	0.22	0.20
SO_2, ppmv	0.99	41.80	0.96	0.91
HCl, g/h	<0.8	8.60	2.90	2.70
SO_2, g/h	27.40	1070.0	22.0	20.6
Particulates (@7% O_2), mg/dscm	358	211	173	171
PCB, µg/h	57.50	174.50	58.10	126.20
Ash				
PCB, ppm	0.01	0.240	0.900	0.540
Pb, ppm	7,100	6,000	6,400	6,200
EP Tox (Pb), mg/L, ppm	25.0	28.0	36.0	36.0
TCLP (Pb), mg/L, ppm	0.01	0.01	0.02	0.01
Operating Conditions				
Waste feedrate (avg. daily), kg/h	3,328	3,287	3,626	3,600
DRE (PCB), wt%	99.99967	99.99880	99.99972	99.99905
DE (PCB), wt%	99.88	93.77	83.15	84.48
Primary combustion chamber				
Exhaust temperature (avg.), °F	1,797	1,836	1,922	1,885
Residence time, min	19	19	18	19
Secondary combustion chamber				
temperature(avg.), °F	1,886	1,887	1,889	1,907
Residence time, sec	>3	>3	>3	>3
Acid gas removal efficiency, wt%				
HCl	>99	>99	>99	>99
SO_2	>99.9	>99.1	>99.9	>99.9

(ORNL, Leaching of Metals from Alkaline Wastes by Municipal Waste Leachate, ORNL/TM-11050, Mar. 1987). It appears that the differences in the test procedures and alkalinity of the matrix (which is significant here because of the lime pretreatment of the original waste-site feed-matrix) cause a difference in the pH environment that is sufficient to affect the solubility and leachability of heavy metals, particularly lead.

Mobility of Heavy Metals - Comparison to EP Tox and Proposed TCLP Toxicity Characteristic Standards

EP Tox and TCLP tests were conducted on the feed, furnace ash, scrubber water, and scrubber solids. All of the results of the EP Tox tests on the feed and the furnace ash exceeded the 5 ppm toxicity characteristic standard for lead (24-57 ppm). Two samples of the feed exceeded the proposed TCLP toxicity characteristic standard of 5 ppm for lead (8.6 ppm and 35 ppm). All of the furnace ash samples passed the TCLP standard. For the other heavy metals, all of the results were below their respective toxicity standards.

Destruction and Removal Efficiency (DRE) of PCBs

PCBs were analyzed in the solid waste feed, furnace ash, scrubber effluent solids, stack gas, scrubber liquid effluent, and scrubber water inlet.

The Shirco unit achieved a DRE for PCBs ranging from 99.99972% to 99.99880%. The RCRA DRE standard is 99.99%, and the TSCA DRE standard is 99.9999%.

It should be noted that the unit was operated to produce an ash that contained 1 ppm or less of PCB, as mandated by the EPA Region IV On-Scene Coordinator. This operating standard was lower than the minimum 2 ppm TSCA standard for an allowable PCB concentration in a product stream. PCB concentration in the waste feed varied from 5.85 to 3.48 ppm during the tests, and therefore a unit operation based on a DRE for PCBs was impractical because of the difficulty in measuring extremely low PCB concentrations in the stack emissions.

Other Organic Stack Gas Emissions

Several volatile and semivolatile organic compounds were detected in the stack gas at concentrations greater than 50 ppt. Low levels of several phthalate compounds were also detected in blank samples and may be traced to contamination from plastic components in the process, sampling equipment, or laboratory apparatus. Other volatile and semivolatile organic compounds, which may represent PICs, were detected. They include: halomethanes; chlorinated organics; aromatic semivolatile compounds; other volatile organics, including benzene, toluene and ethylbenzene; oxygenated hydrocarbons, and p-chloro-m- cresol. Dioxins and furans were not detected in the stack gas samples.

Acid Gas Removal—
Measured HCl emission rates ranged from less than 0.8 to 8.6 g/h. Since the chlorine concentration in the solid waste feed was below the 0.1% detection limit, it is impossible to determine actual HCl removal efficiency. However, SO_2 emissions were less than 1,100 g/h, with an average 149 kg/h SO_2 feedrate giving an average removal of SO_2 in excess of 99%. SO_2 is more difficult to remove than HCl in a caustic scrubber, and the tests show that HCl removal should be in excess of the 99% determined for SO_2 removal.

Particulate Emissions—
The particulate emissions during the first day were 358 mg/dscm. The unit was cleaned and mechanical adjustments were made resulting in an emission rate of 211 mg/dscm during the second day. The emissions during the third day were 172 mg/dscm (average of duplicate measurements). These values exceeded the RCRA standard of 180 mg/dscm during 2 of the 4 sampling periods.

Particulate emissions were analyzed for metals. The results indicate that the emissions control system could not effectively control the flows of metals, which were the principal contaminants and cause of the system's inability to consistently meet RCRA particulate emissions standards. In particular, the concentrations of lead (58 wt%), sulfur (16 wt%), and sodium (1.9 wt%) were extremely high. Based on initial concentrations in the pretreated feed, the use of sodium carbonate solutions in the emissions scrubbing system, and the carryover of lead salts as fines, the predominance of these species on the particulate emissions becomes more likely as the emissions control system becomes overloaded.

Analysis of Scrubber Makeup Water, Scrubber Water, and Scrubber Solids—
No extraordinary levels of semivolatile or volatile organics were detected in any of the streams. No PCBs or dioxins or furans were detected.

The major concentration of contaminants was found in the scrubber solids, as determined by an analysis of the sludge obtained from the bottom of the water blowdown. The significant concentrations of metals and inorganics resulted from feed concentrations of metals and inorganic salts that adversely affected the emissions control system and the stack emissions.

Operations

Introduction

A review of the Haztech, EPA Technical Assistance Team (TAT), and EPA logbooks and progress reports, plus discussions with unit and project personnel, provided a summary of mechanical and operating problems encountered in this first application of a commercial Shirco incineration system at a Superfund site. The startup of the unit began on Dec. 31, 1986 and continued until Oct. 13, 1987, with 7,110 tons of waste feed processed. Based on a capacity of 100 ton/d, the overall operating or utilization factor experienced by this transportable Shirco infrared thermal destruction system at the Peak Oil Superfund site was 24%. This assumes that the unit required 71 operating days to process the waste feed, but that the unit remained at the site for 286 days.

Feed Preparation and Handling

Feed Preparation—
The Peak Oil waste feed matrix was a solidified sludge that was prone to agglomeration and caused clogging, bridging, and jamming of the original crusher equipment. Prior to the SITE demonstration (May 10, 1987), the crusher was replaced with a power screen that shredded, screened, and aerated the feed to a consistency and size that was accommodated by the Shirco feeder.

Conveyor—
Conveyor system problems included spillage of waste feed, waste material sticking to the conveyor belt, and an inability to adjust feedrate from the conveyor to the unit's feeder system. Modifications to the conveyor system included the addition of a "skirt" below the conveyor to catch spillage, a conveyor scraper that minimized sticking, and a variable speed controller and revised motor arrangement that provided feedrate control.

Primary Combustion Chamber Section

Feed Inlet—
The screw augers and their motor drives experienced continuous clogging and overload problems. The feed system required continuous attention by operating personnel and the addition of "bridgebreakers" to reduce the bridging of the agglomerating waste feed.

The screw augers are designed with reversing capability, and the motor drives are designed for a 50% overload based on adequate feed preparation. If the feed is not properly crushed, screened, and prepared, the augers' materials -handling efficiency will decrease; bridging and plugging problems -- particularly with an agglomerating feed matrix -- will occur, causing significant overload and eventual burnout to the motor drives.

Ash Outlet—
The ash removal system required frequent maintenance and unit downtime. The cooling screw and incline screw were continually clogging and breaking, and their motor drivers would overload and burn out. When the screws were reversed to dislodge material under the screw flights, breakage and further abuse of the motors would occur. Dusting and odor problems were evident in and around the ash removal system.

The intermittent failure of the original feed-preparation system (i.e, crusher and screen) to deliver a consistently sized waste feed allowed unprepared materials to enter the unit. The unprepared feed caused occasional jamming and blockage of the ash discharge system. Plugging of the incline screw was also caused by the buildup of ash in the discharge chute and improper control and monitoring of the ash quench facilities.

Miscellaneous Systems—
In addition to the feed-inlet and ash-outlet system difficulties, problems also occurred with conveyor belt failures, cakebreaker failures, and belt-conveyor system maintenance.

The original belt installed at the Peak Oil site was provided with several test sections of various alloys. Because of the nature of the feed material and minimal knowledge of its chemical characteristics, this approach was selected so that if belt failure did occur, an appropriate alloy then could be installed. Due to the chlorine and sulfur content of the initial feed material, certain test sections failed and were replaced with the standard Type-314 stainless steel alloy. A properly cured Type-314 stainless steel belt has provided reliable service through the completion of the project.

In addition, possibly due to the mechanical failures in feed screening and crushing noted above and to the resultant feeding of unsized or nonspecification waste material, the cakebreakers also may have been subject to severe stress when these articles were encountered, causing cakebreaker failure .

Although problems were encountered with the belt conveyance system, it appears that the roller bearing specifications do not require any changes. Proper attention to lubricant choice and a rigorous maintenance schedule are required to ensure a long roller bearing and belt conveyance system operating life.

Secondary Combustion Chamber Section

The only operating problem that affected the SCC was the failure of several burner blocks. Proper curing of the burner blocks is required prior to achieving operating temperatures. A slow curing of the burner blocks prior to operation may not have been fully performed. In addition, numerous startups and shutdowns of the unit subjected the blocks to cooling and heating cycling that adversely affected block life. Changes to the burner block have been incorporated in the current design to allow for symmetrical expansion and contraction and minimization of stress points observed at Peak Oil, and to move the flame front farther away from the blocks, thus extending their life.

Emissions Control Section

Quench/Venturi System—
The original quench/venturi system design consisted of two stainless steel quench tubes where the hot exhaust gases from the SCC are cooled with quench water sprays. The cooled gases enter the dual fiberglass-reinforced-plastic (FRP) venturis where water injection at the venturi throats atomizes and increases particulate precipitation as the gases proceed into the scrubber system. The system, as operated, was modified to a one-pass quench/venturi flow with a venturi pressure drop exceeding 15 psi. There were indications based on the cracking and scorching of the FRP venturi section and warpage of

the scrubber internals that the systems may have been subjected to excessive process temperatures probably caused by a failure of the quench system and its cooling sprays. The high temperatures exhibited by the gas exiting the quench system probably were the result of low gas flow and subsequent channeling of the exhaust gas stream through only one pass of the dual quench tubes and venturis. Because of the channeling, the gas stream was not exposed to the full cooling effect of the spray nozzles, and damage to the downstream FRP systems resulted.

The particulate precipitation effect at the venturis also suffered due to the channeling of the low gas flow. In addition, the cracking of the FRP venturi section also may have occurred because the anchor bolts on the venturi support structure may not have been loosened during installation of the system to allow for thermal expansion of the quench tubes. Compounding the loss in cooling and particulate removal efficiency caused by the gas channeling was the plugging of the water sprays, which reduced the overall quench and venturi water flows and spray coverage. This plugging may have been caused by the excessive salts content in the quench water.

Scrubber System—

The scrubber is a horizontal cross-flow design that is capable of scrubbing exhaust gases and meeting regulatory requirements for acid gas removal and particulate loading. The scrubber system at Peak Oil, however, apparently could not control particulate emissions at the quantities and quality of the particulates encountered. Because of the excessive fines loadings and excessive salts content in the scrubber water streams, the scrubber system not only exhibited high stack particulate loadings, but also was burdened by the significant salts buildup in the scrubber water streams requiring higher blowdown and fresh makeup-water rates.

Induced Draft Fan System—

Because of the particulate carry-over from the scrubber, plating of the induced-draft fan blades occurred, causing blade imbalance and fan vibration. It does not appear that the design of the fan is contributing to the problem. A water spray system has been added at the fan to periodically wash the blades of plated salts and minimize vibration problems.

Emissions Control Section Redesign—

The emissions control section of the Shirco unit that was employed at the Peak Oil site has been replaced with a high efficiency Calvert scrubber that is designed to provide improved particulate removal efficiencies over a wider range of gas flow and fines loading.

Costs

Several cost scenarios are developed, based on a model for a 100-ton/d Shirco unit equivalent to the unit that operated at Peak Oil. The economic analysis concludes that the cost to operate this commercial unit ranges from $1 96/ton at an acceptable utilization factor of 80% to $425/ton at a utilization factor of 37%, which reflects a corrected actual operation of the unit at Peak Oil. The cost analysis excludes vendor profit, waste excavation, feed preparation and ash disposal costs.

APPENDIX C-2

SITE DEMONSTRATION RESULTS SHIRCO PILOT-SCALE INFRARED INCINERATION SYSTEM ROSE TOWNSHIP DEMODE ROAD SUPERFUND SITE [2]

Introduction

The SITE program demonstration of the Shirco Pilot-Scale Infrared Incineration System for thermal treatment developed by Shirco Infrared Systems, Inc. of Dallas, Tex., was conducted at the Demode Road Superfund Site in Rose Township, Mich. The Demode Road site is a 12-acre waste site previously used to bury, dump, and store industrial wastes such as paint sludges, solvents, and other wastes containing PCBs, oils and greases, phenols, and heavy metals. PCBs and lead were the principal contaminants in the soil used for the test of the Infrared System. The demonstration was conducted from November 2-13, 1987 and treated 1,799 kg (3,967 lb) of contaminated soil under various test conditions.

Feed Preparation

The demonstration used soil from an area of the site that was highly contaminated with PCBs and lead, as determined in the original remedial investigations performed at the site. Pretest sampling and analysis further identified those sectors within the area most highly contaminated with PCBs and lead for excavation. Other organics and heavy metals were also present in these sectors. Soil from these sectors, to be used as feed for the test, was excavated and mixed into a pile using a front-end loader, and then screened to remove aggregate and debris greater than 1 in. in diameter. The screened soil was drummed and transferred to a designated zone adjacent to the test unit. During the demonstration, the feed material was transferred from the drums to pails, weighed, and then manually fed to the unit through a hopper mounted on the unit. Two drums of soil were blended with 3-wt% fuel oil to be used for several of the test runs to investigate the effect of increased feed heating value on overall unit performance and energy consumption at varying operating conditions.

Test Procedure

A total of 17 test runs were conducted. Three runs were performed under design operating conditions to assess overall unit operation and system performance (Phase I), and 14 runs were conducted under varying operational parameters to evaluate their effect on system performance and energy consumption (Phase II).

The Phase I runs were conducted at a 1,600°F PCC temperature, a 2,200°F SCC temperature, and a PCC residence time of 20 min. Each of the three runs was sufficiently long (6-10 hours) to gather a large enough sample of stack gas to analyze it for PCBs. An additional run was conducted at the same operating conditions to obtain specific stack samples that had not been successfully collected during the two previous runs.

The Phase II runs were conducted for approximately 1 h under varied operating conditions: PCC temperature 900°, 1,200°, 1,400°, and 1,600°F; SCC temperature 1,800° and 2,200°F; PCC feed residence time 10, 15, 20, and 25 minutes; and PCC combustion air flow on-off to simulate oxidizing or non-oxidizing/pyrolytic PCC atmosphere.

A summary of the operating program is presented in Table C-2.1.

Results

A summary of the SITE demonstration results is presented in Table C-2.2. Detailed results and

Table C-2.1. Operations Summary

Date	Time period	Test run	Primary combustion chamber Temperature °F	Primary combustion chamber Res. time min	Waste feedrate lb/h	Secondary combustion chamber Temperature °F	Secondary combustion chamber Res. time s
11-02-87	15:20-17:13 (d)	0					
11-03-87	10:20-11:40	-	1,600	20	88.89	2,200	
	11:40-18:25	1	1,600	20	66.53	2,200	2.60
11-04-87	07:33-09:45	-	1,600	20	69.09	2,200	
	09:45-20:13	2	1,600	20	73.11	2,200	
11-05-87	07:55-08:16	-	1,600	20	82.86	2,200	
	08:16-18:37	3	1,600	20	77.41	2,200	
11-06-87	09:55-10:32	-	1,600	20	128.57	2,200	
	10:32-15:31	1-2(f)	1,600	20	70.23	2,200	
11-07-87	00:00-24:00 (e)						
11-08-87	00:00-24:00 (e)						
11-09-87	09:34-10:35	10	1,200	20	78.68	1,800	
	11:26-12:27	14	1,200	15	95.41	1,800	
	13:45-14:47	5	1,400	20	65.81	2,200	
11-10-87	09:30-10:30	6	1,600	15	110.77 (a)	1,800	
	11:20-12:20	8	1,600 (b)	15	120.00 (a)	1,800	
	13:13-14:14	15	1,200 (b)	15	100.33 (a)	1,800	
	15:07-16:07	18	900 (b)	20	80.00 (a)	1,800	
11-11-87	09:04-10:05	7	1,600	10	114.10	2,200	
	11:30-12:31	9	1,200 (b)	25	62.95	2,200	
	13:20-14:20	11	1,200 (b)	20	73.85	2,200	
	15:10-16:10	13	1,200 (b)	15	88.29	2,200	
11-12-87	10:27-11:27	16	900 (b)	25	65.00	2,200	
	12:35-13:35	17	900 (b)	20	70.00	1,800	
11-13-87	10:12-11:12	19	1,600 (c)	15	88.29 (a)	1,800	

(a) Waste feed blended with approximately 3 wt% fuel oil.
(b) Test runs conducted under non-oxidizing atmosphere.
(c) Primary combustion chamber bed depth set at 1 in. All other test runs conducted at 1-1/2-in. bed depth.
(d) System shakedown; no formal sampling.
(e) Weekend; unit shutdown.
(f) Run 1-2 was conducted to make up for incomplete sampling runs that were to be conducted during Runs 1 and 2.

operating summaries are presented in the Technology Evaluation Report [2]. The following discussion presents summary results and conclusions from the demonstration.

Characteristics of the Feed

Based on data from the previous remedial investigation of the site, a specific area within the site was identified with the highest concentrations of both PCBs and lead, the major soil contaminants of concern. The remedial investigation also described the soil as a dry, brown, sandy, and silty clay topsoil, which upon excavation proved to be an accurate observation. Subsequent pretest sampling and analysis of the specific area of the site identified particular sectors with the highest contaminations of PCBs and lead. A composite sample of all the sectors within the area indicated a 7.8 pH, 9.0 wt% moisture, 81 wt% ash, less than 1,000 Btu/lb high heating value, and a 0.95 g/cc density. The composite sample contained 570 ppm of total PCBs and 580 ppm lead (elemental lead after digestion and conversion to inorganic form). A composite sample of the 10 sectors chosen for excavation contained 626 ppm PCBs , 560 ppm of lead, 55 ppb of tetrachlorodibenzo-p-dioxin (TCDD), and 4.2 ppb of tetrachlorodibenzofuran (TCDF). Once the feed excavation was begun, it became evident that the front-end loader could not confine its large-scale activities to the 10 specific sectors, and an area comprising 14 specific sectors was excavated for the unit's feed source.

The feed characteristics of the soil were obtained from an analysis of the composite of the grab samples of feed taken during each of the test runs. In addition to lead, for which concentrations ranged from 290 to 3,000 ppm and averaged 778 ppm, several other metals were present at average concentrations exceeding 50 ppm, including barium (591 ppm), zinc (301 ppm), and chromium (85 ppm). Total PCB concentrations ranged from 10.2 to 669 ppm and averaged 272 ppm.

Several samples of the feed contained small quantities of TCDFs ranging from 0.04 to 0.10 ppb. Volatile and semivolatile organic compounds including methyl ethyl ketone, trichloroethene, and bis(2-ethylhexyl)phthalate were measured in feed

Table C-2.2. Site Demonstration: Summary of Test Results

Operating conditions PCC		Waste feed characteristics				Furnace ash characteristics			
Temp °F	Residence time min	PCB ppm	Pb ppm	EP Tox (Pb) ppm	TCLP (Pb) ppm	PCB ppm	(Pb) ppm	EP Tox (Pb) ppm	TCLP (Pb) ppm
900(a,b)	20	327	590	0.29	0.81	2.079	1,000	0.38	2.90
900(b)	20	20.2	660	0.67	0.88	3.396	1,400	0.89	6.20
900(b)	25	367	290	0.32	7.00	0.168	860	0.88	3.80
1,200	20	297	640	0.05	0.56	0.115(d)	1,100	4.10	1.60
1,200	15	27.6	870	0.20	0.44	0.077	1,000	0.38	3.60
1,200(b)	25	456	590	0.12	0.53	0.108(d)	1,200	0.14	0.05
1,200(b)	20	669	610	0.20	0.71	0.066(d)	1,200	0.06 4.90(g)	4.10 2.80(g)
1,200(b)	15	602	470	0.18	0.53	0.025(d)	2,000	(h)	(h)
1,200(a,b)	15	309	370	0.21	0.96	0.066(d)	1,000	0.46	0.82
1,400	20	56.0	740	0.07	0.89	0.087(d)	1,600	ND	0.15
1,600	20	10.2	3,000	0.15	0.67	0.037	1,100	0.05	ND
1,600	20	35.2	1,400	0.20	0.35	0.112	1,300	ND	ND
1,600	20	20.4	550	0.23	1.30	0.003	1,100	0.13	0.05
1,600	20	(f)	1,100	0.14	0.49	(f)	420	0.28	1.80
1,600	10	391	620	0.25	0.73	0.045(d)	1,700	ND	1.00
1,600(a)	15	451	620	ND	0.66	0.117(d)	840	0.43	0.17
1,600(a)	15(c)	271	390	0.53	1.80	0.004	1,500	0.27	0.23
1,600(a,b)	15	311	500	0.07 3.00(g)	0.55 1.40(g)	0.061(d)	800	1.10	2.40

(a) Waste feed blended with 3 wt% fuel oil.
(b) Non-oxidizing atmosphere.
(c) PCC bed depth at 1 in. All other tests at 1 1/2 in.
(d) PCB levels below analytical detection limits. Total shown is sum of detectable limits indicated in analyses.
(e) ND - nondetectable value.
(f) Run was conducted to make up for incomplete semivolatile organics, PCDD/PCDF, soluble chromium, and stack gas particulate samplings on other runs.
(g) Data from additional EP Tox and TCLP tests.
(h) ND due to broken sample container.

samples at concentrations less than 50 ppm. Methyl ethyl ketone and trichloroethene were also detected in solvent blanks and are attributed to analytical laboratory contamination.

Characteristics of the of Furnace Ash

The characteristics of the furnace ash were obtained from an analysis of the composited grab samples taken at the conclusion of each test run. In addition to lead, where concentrations ranged from 420 to 2,000 ppm and averaged 1,173 ppm, several other metals were present at average concentrations exceeding 50 ppm, including barium (1,061 ppm), zinc (410 ppm), and chromium (8 1 ppm). Total PCB concentrations ranged from 0.004 to 3.396 ppm. A sample of furnace ash contained 0.07 and 0.30 ppb of TCDF during each of two runs conducted at a 900°F PCC operating temperature; the normal PCC operating temperature is 1,600°F. These runs were also conducted without the input of PCC combustion air to simulate non-oxidizing or pyrolytic combustion conditions . The low PCC temperature and pyrolytic environment could have led to the incomplete desorption or incineration of TCDF present in the feed or to the production of TCDF from the incomplete combustion of PCBs in the feed. Volatile compounds (including methylene chloride, methyl ethyl ketone, tetrachloroethene, and trichloroethene) were also measured in the furnace ash samples in concentrations ranging from 3.9 to 64 ppm, with one sample containing 980 ppm of methylene chloride. Methyl ethyl ketone and trichloroethene were also detected in solvent blanks, and methylene chloride is commonly employed in laboratory procedures; therefore these compounds may be products of incomplete combustion and/or the result of laboratory contamination.

Residual PCBs in Furnace Ash

During the demonstration test, 17 runs were conducted at varying operating conditions. In addition to the DRE levels, which are an indication of the performance of the Shirco Pilot-Scale Infrared Incineration System and its ability to meet RCRA

and/or TSCA regulatory standards, the reduction of PCB concentration from the feed to the furnace ash is also a measure of the unit's ability to effectively destroy PCBs and produce a furnace ash with a PCB concentration below the TSCA guidance level of 2 ppm.

Two samples of furnace ash exceeded the TSCA guidance level and contained 3.396 and 2.079 ppm of total residual PCBs. The samples were produced during two runs conducted at a 900°F-PCC operating temperature (20 min residence time) , which is significantly lower than the normal PCC operating temperature of 1,600°F. These runs were also conducted without the input of PCC combustion air to simulate non-oxidizing or pyrolytic combustion conditions. At this low PCC temperature and pyrolytic condition, these higher total residual PCB levels in the furnace ash may be the result of the incomplete combustion of PCBs in the feed. This is further substantiated by the residual TCDF present in the furnace ash samples from these same two runs, as discussed previously. The remaining runs conducted at 1,200°, 1,400°, and 1,600°F resulted in total residual PCB concentrations in the furnace ash ranging from 0.003 to 0.117 ppm. A third run, which was conducted at a 900°F PCC operating temperature but with an increased PCC residence time of 25 min resulted in a total furnace ash PCB concentration of 0.168 ppm with no detectable TCDF. It is possible that the increased residence time in the PCC may have offset the low 900°F PCC operating temperature, providing the additional processing time for the satisfactory destruction of the PCBs in the feed.

Mobility of Heavy Metals - Comparison of Feed and Furnace Ash

In order to determine whether heavy metals, particularly lead, would leach from the furnace ash produced in the Shirco Pilot-Scale Infrared Incineration System, EP Tox and TCLP tests were conducted to determine the mobility of heavy metals from the furnace ash as compared to the feed. The initial EP Tox analyses for lead in the leachate ranged from 0.05 to 0.67 ppm for the feed and 0.05 to 4.10 ppm for the furnace ash. The initial TCLP analyses ranged from 0. 35 to 1.80 ppm (with one sample at 7.0 ppm) for the feed and 0.05 to 4.10 ppm (with one sample at 6.20 ppm) for the furnace ash.

A comparison of the EP Tox and TCLP analyses conducted on the furnace ash and the feed do not show any trend or evidence that indicate reduced mobility of lead from the furnace ash as compared to the feed as a result of the thermal treatment. The comparison did reveal that the concentrations of lead in the TCLP leachates from both the feed and the furnace ash were consistently higher than the corresponding EP Tox results from the same samples.

When several samples were retested to verify the results, the concentrations of lead in the EP Tox leachates (4.9 ppm feed, 3.0 ppm furnace ash) were higher than during the initial tests, and in direct reversal to the original data, exceeded corresponding TCLP leachate concentrations (2.8 ppm feed, 1.4 ppm furnace ash). The results of the retest again did not indicate reduced mobility of lead from the furnace ash versus the feed as a result of the thermal treatment.

Mobility of Heavy Metals - Comparison to EP Tox and Proposed TCLP Toxicity Characteristic Standards

EP Tox and TCLP tests were conducted on the feed, furnace ash, scrubber water, and scrubber solids. All of the results were below the EP Tox and proposed TCLP toxicity characteristic standards -- 5 ppm arsenic, 100 ppm barium, 1 ppm cadmium, 5 ppm chromium, 5 ppm lead, 0.2 ppm mercury, 1 ppm selenium, and 5 ppm silver -- except for 1 feed sample at 7.0 ppm lead (TCLP) and 1 furnace ash sample at 6.2 ppm lead (TCLP). Despite concentrations of heavy metals in the waste-feed and furnace as high as 3,000 ppm and 2,000 ppm (lead) respectively, in most cases the concentrations of metals in the EP Tox and TCLP leachates met their respective toxicity characteristic standards.

Destruction and Removal Efficiency (DRE) of PCBs

The DRE of PCBs for the first three runs (Phase I) was greater than 99.99%. The regulatory standard for incineration under RCRA is 99.99% DRE and under TSCA is 99.9999% DRE. The low PCB concentrations in the feed resulted in PCB levels in the stack gas that were below the analytical detection limits for two of the runs. Therefore for these runs, DRE is calculated based on the sum of the detection limits of the PCB congeners. Stack gas measurements conducted during the third run did detect trichlorobiphenyl and tetrachlorobiphenyl congeners, and a DRE is shown based on this measurement. The less rigorous sampling in Phase II of the test was not designed to allow calculation of DRE.

Other Organic Stack Gas and PCC Offgas Emissions

Several volatile and semivolatile organic compounds were detected in the stack gas at concentrations less than 100 ppb and established standards for direct inhalation. Low levels of several phthalate compounds were also detected in blank samples and may be traced to contamination from plastic components in the process, sampling equipment, or laboratory apparatus. Several volatile organic compounds (including benzene and toluene) were detected in the stack gas and the scrubber makeup water and may be attributable to contamination from the makeup water, although PIC formation is a possibility. Other volatile and semivolatile organic compounds, which probably represent PICs, were detected. They include: halomethanes; chlorinated species including chlorobenzene and methylene chloride; other volatile organics including xylenes, styrene, and ethylbenzene; oxygenated hydrocarbons including acetone and acrolein; carbon disulfide; and p-chloro-m-cresol. Dioxins and furans were not detected in the stack gas samples.

The majority of the organic compounds present in the PCC offgas samples at levels less than 500 ppb were also present in the stack gas. The additional destruction of organics that takes place in the SCC and emissions scrubbing system reduced the concentration of these organic compounds in the corresponding stack gas samples.

Acid Gas Removal

During Phase I Runs 1-3, HCl emissions ranged from 0.181 to 0.998 g/h, which were significantly below the RCRA performance standard of 1,800 g/h. HCl removal efficiencies ranged from 97.23 to 99.35 wt%. Acid gas removal was not measured in Phase II.

Particulate Emissions

Particulate emissions were measured throughout the demonstration and ranged from 7 to 68 mg/dscm, well below the RCRA standard of 180 mg/dscm.

Analysis of Scrubber Makeup Water, Scrubber Water, and Scrubber Solids

Scrubber makeup water was transported to the site in a tank truck that may have contained some residual contamination prior to fill up. Samples of scrubber makeup water were taken at the end of each run. No PCBs, dioxins, furans, or semivolatile organic compounds were detected. Several volatile organics (including benzene, toluene, and trichloroethene) were measured at concentrations less than 15 ppm. The concentrations of heavy metals were all less than 0.2 ppm.

Samples of the water recirculation through the venturi scrubber system (referred to as scrubber water) were also taken at the end of each run. PCB concentrations were less than 200 ppt; no dioxins, furans, or semivolatile organic compounds were detected. Small quantities of benzene (2 ppm) and toluene (5.7 to 11 ppm) were measured in several of the samples and are attributable to the similar contaminants in the scrubber makeup water. The concentrations of heavy metals in the scrubber water were all less than 1 ppm, except for barium, which ranged from 0.2 to 2.2 ppm, and lead, which ranged from 0.12 to 1.8 ppm.

Insufficient quantities of scrubber solids in the scrubber water were available for analysis.

Overall Disposition of Metals

Total metals analyses of the feed, furnace ash, PCC offgas and stack-gas particulates, scrubber makeup water, scrubber water, and scrubber solids showed that the majority of the detectable metals that entered the unit with the feed (including lead) remained in the furnace ash. An overall mass balance of lead through the unit was calculated, based on the analysis of lead in the samples, the measured feedrate (as weighed during the runs' operating periods), the calculated furnace ash flowrate (based on the ultimate analysis of ash in the feed sample), and the measured particle mass and gas volume (obtained from the gas' EPA Method 5 sampling trains). Phase I results indicate an average lead mass flowrate of 28.3 g/h in the feed, 37.0 g/h in the furnace ash, 0.206 g/h in the PCC offgas particulates, and 0.109 g/h in the stack gas particulates. The quantity of lead leaving the unit with scrubber water effluent is approximately 0.204 g/h based on the maximum measured concentration of 1.8 ppm lead in the scrubber water and an overall approximate water flowrate of 30 gph. The PCC offgas particulates sampled during the Phase I runs contained an average of 5,364 ppm of lead as compared to stack gas particulates, which contained an average of 15,830 ppm of lead. By contrast, the average concentration of lead in the feed was 1,550 ppm. Although the concentration of lead in the particulate matter increases as the process flow progresses through the unit, the actual mass flow of lead decreases as the gas stream is cooled and treated through the emissions control system.

For the Phase I runs, sampling and analysis procedures were conducted to evaluate vaporous lead concentrations in the PCC offgas and soluble

chromium concentrations in the PCC offgas and stack-gas particulates. The special sampling for vapor phase lead and soluble chromium was unable to detect any of either metal at levels greater than the detection limits of 2.7 and 264 ppb, respectively.

Other heavy metals, particularly barium and zinc, with average concentrations exceeding 100 ppm in the feed (barium 591 ppm, zinc 301 ppm) were also present in high concentrations relative to other heavy metals in the furnace ash (barium 1,061 ppm, zinc 410 ppm) and scrubber water (barium 0.8 ppm , zinc 0.3 ppm).

Optimum Operating Conditions

Phase II was designed to examine the effect of varying operating conditions on energy consumption and on residual levels of heavy metals and organics in the furnace ash versus feed. Based on the data obtained, an analysis was conducted to compare energy consumption in the unit at operating conditions that did not affect the performance of the unit. A reduction in the PCC operating temperature from 1,600° to 1,200°F reduced the average PCC power usage 48%, from 0.2294 to 0.1200 kWh/lb feed. A reduction in the SCC operating temperature from 2,200° to 1,800°F reduced the average propane fuel consumption by 51%, from 3,997 to 1,952 Btu/lb feed. The use of 3 wt% fuel oil to supplement the fuel value of the feed further decreased PCC power usage by 26% and 67% at PCC operating temperatures of 1,600°F and 1,200°F, respectively, with accompanying increases in overall feedrate of 32% and 26%. The costs for fuel oil and its attendant facilities must be examined for specific applications of the Shirco system to determine the cost effectiveness of a fuel oil additive to the waste feed.

As discussed in previous sections, the results did not provide any trend in the residual levels of the heavy metals and organics in the furnace ash versus the levels in the feed as the operating conditions were varied (and PCC operating temperatures maintained at 1,200° to 1,600°F). At an abnormally low PCC operating temperature of 900°F, without the input of combustion air to simulate non-oxidizing or pyrolytic combustion conditions, total PCB and TCDF concentrations in the furnace ash increased. The increases may indicate that these PCC conditions led to incomplete desorption or incineration of PCB and TCDF and to the production of TCDF from the incomplete combustion of PCBs in the feed.

Operations

There were no problems associated with the operation of the Shirco Pilot-Scale Infrared Incineration System that would impact on the ability of a commercial unit to process the waste feed at the Demode Road Superfund site.

Specific functions for which problems may arise, such as the feed preprocessing, screening, and handling operations are manually performed during pilot-scale testing and in general do not relate to any scale-up considerations. The feed that was processed did not present any physical and chemical properties that would cause problems in a commercial transportable unit. Further bench-scale tests are important to evaluate the feasibility of any proposed feed-pretreatment system.

An additional area of investigation focused on the mobility of heavy metals in the furnace ash versus the feed, as measured and compared to the EP Tox and TCLP toxicity characteristic standards. The results of the tests were inconclusive; there was no evidence that the thermal treatment affected metals leaching or mobility. Additional thermal tests are needed to determine the effect that heavy metals (particularly lead) will have on the furnace ash and its ultimate storage and disposal. In general, based on the results, the test demonstration of the pilot-scale unit showed that the Shirco system is a viable technology for application at the Demode Road Superfund site.

APPENDIX D-1

FLORIDA STEEL PILOT-SCALE TESTS [4]

Introduction

The Florida Steel Corp. conducted a feasibility study to develop and evaluate various alternatives for onsite treatment of PCB-contaminated soils discovered at their Indiantown, FL mill site. The source of the PCB contamination was from the use of hydraulic fluid containing PCBs in the billet shearing system. Leaks in the system allowed the release of hydraulic fluid to the surrounding soils.

The purpose of the study was to aid in selection of a method to cleanup the site. As part of this study, a demonstration test using the Shirco pilot-scale unit was conducted at the site on May 13-15, 1986, by Shirco Infrared Systems of Dallas, TX. The purpose of the test was to demonstrate the capability of the Shirco infrared technology to detoxify the soil and meet all the requirements of 40 CFR Part 761.

The demonstration program consisted of six tests. Three soil mixes, with different levels of contaminants representative of the material stored at the site, were used. Incinerator operating parameters that were varied included soil residence time and temperature of the secondary chamber.

Feed Preparation

The contaminated soil was excavated and stored in a ground level vault. Representative samples of the contaminated soils were stored in 55-gal drums at the site. Material from 3 of those drums (designated Mix 1, 2, and 3) were selected for processing in this program.

The waste material was weighed in batches in buckets and was manually placed on a metering belt conveyor that fed the material to the furnace. The conveyor is equipped with an adjustable gate that can be used to regulate and distribute the feed.

Test Procedure

The test program was designed to evaluate the effects of various operating conditions and waste feed characteristics on overall system performance. Six tests were performed in this program. A summary of the operating parameters is given in Table D-1.1.

All runs except Tests 1 and 5 were performed with Mix 1, which had the highest concentration of PCB. Tests 1 and 5 were performed with Mixes 2 and 3, respectively, which contained different concentrations of organic constituents.

Feedrate to the furnace was controlled by the metering-belt speed setting and the width of the metering gate setting. For this program, the gate setting remained constant to give a 1-in. bed depth; therefore, feedrate depended on the belt speed and other factors, such as density of the feed.

For this program, the operating temperature of the primary chamber was anticipated at 1,650°F. Actual operating temperatures were below that level because the auxiliary energy requirements exceeded the capacity of the power supply to the electrical heating elements. The temperature of the secondary chamber was varied from 1,900° to 2,200°F to determine the effect of different temperature levels on destruction effectiveness for these specific wastes.

Material residence time in the primary chamber was established by adjustment of the belt speed. Two residence times were used—15 and 25 min. The minimum secondary-chamber residence-time planned for this program was 2 s.

Table D-1.1. Operating Parameters

Test	1	2	3	4	5	6
Date	5-13-86	5-14-86	5-14-86	5-14-86	5-15-86	5-15-86
Time Test Begun	14:00	10:10	12:53	16:50	09:30	1318
Time Test Ended	17:05	12:53	16:50	17:50	13:05	1620
Waste feed						
Mix number	2	1	1	1	3	1
Feedrate, lb/h	115.4	61.5	61.5	32.0	106.4	79.8
Total feed, lb	355.5	167.1	242.9	32.0	381.3	241.3
Furnace belt speed, ft/h	22.2	13.3	13.3	22.2	22.2	22.2
Solid phase residence time, min	15	25	25	15	15	15
Process temperatures						
Feed discharge, °F	241	212	158	173	244	157
Furnace Zone A, °F	1.539	1,625	1,582	1,524	1,614	1,521
Furnace Zone B, °F	1,561	1,607	1,572	1,503	1,598	1,498
Furnace exhaust, °F	1,337	1.442	1.444	1,377	1,551	1.398
Afterburner, °F	2,019	2,196	2,006	1,990	1,989	1,900
Stack, °F	174	175	171	174	177	176
Furnace draft, in. H_2O	-0.006	-0.019	-0.005	-0.007	-0.018	-0.024
Afterburner draft, in. H_2O	-0.150	-0.182	-0.035	-0.050	-0.175	-0.128
Scrubber						
Venturi pressure drop in. H_2O	7.8	3.0	3.3	3.0	3.0	3/4
Venturi water flow, gpm	2.8	2.8	2.8	3.0	2.8	2.9
Tower water flow, gpm	11.8	5.8	5.4	5.4	4.4	4.4
Stack exhaust						
Average velocity, afpm	2,385	2,761	1,424	--	2,339	1.299
Flow volume, dscfm	55	68	33	--	53	31
Avg. CO conc., ppm	12.5	26.6	10.6	--	3.4	2.4
Avg. CO_2 conc., %	8.6	8.7	9.8	--	10.3	9.2
Avg. O_2 conc., %	9.0	12.2	8.6	--	6.9	9.5
Process energy requirements						
Furnace, Kw	44.05	44.06	44.76	39.00	41.56	45.70
Btu/lb feed	1,303	2,444	2,483	4,158	1,332	1,960
Afterburner, Btu/h	183,073	215,075	136,326	123,653	202,056	126,253
Btu/lb feed	515	1,287	561	3,864	530	523

Sampling of the process was performed at 5 locations—waste feed hopper, ash hopper, scrubber effluent, afterburner exhaust duct, and exhaust stack. A complete set of samples was obtained for each test, except exhaust stack samples were not taken for Test 4.

Results

The primary objective of this program was to confirm the ability of the Shirco infrared system process to decontaminate polychlorinated biphenyl (PCB) laden soils and to incinerate the PCBs with a DRE of

Table D-1.2. Demonstration Test Summary

Test	1	2	3	4	5	6
Date	5-13-86	5-14-86	5-14-86	5-14-86	5-15-86	5-15-86
Time Test Begun	14:00	10:10	12:53	16:50	09:30	1318
Time Test Ended	17:05	12:53	16:50	17:60	13:05	1620
Operating parameters:						
Furnace:						
Process power rate, MBtu/hr	0.150	0.150	0.153	0.133	0.142	0.156
Avg. residence time, min	15	25	25	15	15	15
Avg. process temp., °F	1,531	1,603	1,573	1,523	1,610	1,471
Afterburner:						
Propane fuel rate, MBtu/h	0.183	0.215	0.136	0.124	0.202	0.126
Avg. process temp., °F	2,015	2,177	1,993	2,007	1,980	1,883
Avg. comb. air, acfm	117	135	70	--	115	64
Avg. oxygen, %	8.96	12.20	8.58	9.63	6.9	9.49
Avg. CO_2, %	8.65	8.67	9.78	9.13	10.3	9.22
Avg. CO, ppm	12.5	26.60	10.60	7.47	3.35	2.40
Combustion efficiency, %	99.99	99.97	99.99	99.97	99.99	99.99
	-0.006	-0.019	-0.005	-0.007	-0.018	-0.024
Particulate/HCL emissions:						
Sample time, min	129	60	94	--	130	51
Stack flowrate, dscfm	55	68	33	NA	53	31
Particulate conc. @7% O_2, gr/dscf	0.015	0.055	0.023	NA	0.037	0.017
HCL, mg/h	<181	<136	<45.3	NA	<408	<227
PCBs						
Waste feedrate, lb/h	115.4	61.5	61.5	32.0	106.4	79.8
PCB conc., ppm	76	2,790	2,560	2,970	400	2,840
PCB feedrate, g/h	3.98	77.83	71.41	43.11	19.30	102.80
Furnace ash						
PCB conc., µg/kg	<2.4	<2.6	<3.4	<2.6	<2.6	<2.6
Scrubber effluent composite						
PCB conc., µg/kg	--	--	<0.34	--	--	--
Flue gas flowrate, m^3/h	92.75	114.94	55.93	NA	88.22	51.36
PCB conc., ng/m3	<3214.34	<709.73	<946.16	NA	2,416.32	<1,719.47
PCB output, µg/h	<29.16	<81.6	<52.9	NA	213.2	<88.31
Destruction and removal, %	>99.999*	>99.9999	>99.99992	NA	99.9989**	>99.99991

*Required DRE not met due to limited analytical detection limit.
**Low DRE is due to periods of operation with secondary-chamber oxygen-levels approaching the permit condition of 3% excess.

Table D-1.3. Waste Characterization of Drummed Soils

	1	2
Moisture, wt%	13.64	13.59
Inerts, wt%	84.52	82.77
Organics, wt%	1.84	3.64
Heating value, Btu/lb	220	430
Density, lb/ft^3	90	90
Form	Soil	Soil
Chlorine, wt%	Nil	Nil
Sulfur, wt%	Nil	Nil
PCB, ppm	150	500

99.9999%, a combustion efficiency of 99.9% and maximum particulate emissions of 0.08 gr/dscf. A summary of the pilot-unit test results is presented in Table D-1.2. The following discussion presents summary results and conclusions from the demonstration tests.

Characteristics of the Feed

Prior to the demonstration test, samples taken from 2 of the drums of contaminated soils stored at the Indiantown Mill were tested for physical characteristics. Results of the tests are given in Table D-1.3. These data were used to determine initial process operating conditions. Composite samples taken during the tests were tested for PCBs. Those test results are given in Table D-1.4.

Characteristics of the Furnace Ash

A grab sampling procedure was used to obtain a representative, time-averaged sample of the furnace ash. The pilot-scale unit was equipped with an ash sampling drawer located in the ash discharge chute. A portion of the furnace ash that drops off the furnace belt into the ash discharge hopper is captured in the sampling drawer. The sampling drawer has a capacity of approximately 50 mL. This drawer was emptied periodically during each test and composited in a 500 mL glass jar.

The furnace ash samples were analyzed for PCBs. The analyses were unable to detect any PCB isomers at levels greater than their detection limits, which range from 0.2 to 1.8 ppm.

Characteristics of the Scrubber Water

The scrubber was operated in a recirculation mode and make-up water was added throughout the day as needed. At the end of each day's operation, the scrubber sump was drained and a sample was taken in a 1-L glass jar. The sample was prepared by solvent extraction and concentration. PCB concentration was determined by GC/MS (EPA Method 680). No PCBs were found in the composite sample at a detection limit of 0.34 ppb.

Particulates and HCl Emissions in the Stack Gas

The concentrations of particulates in the stack gas ranged from 0.015-0.055 gr/dscf when corrected for stack oxygen concentration. The results, given in Table D-1.5 are in compliance with the RCRA and TSCA performance standard of 0.08 gr/dscf.

The concentration of hydrochloric acid (HCl) for each of the tests is given in Table D-1.6. The total HCl flows were less than 0.001 lb/h, which is significantly below the RCRA performance standard of 4 lb/h that would require a 99% HCl removal efficiency.

Total Chlorinated Organics in the Stack Gas

A series of two sorbent tubes containing activated carbon were used to trap sorbents for later determination of total-organic-halide emissions by the use of EPA Method 450.1.

Table D-1.7 gives the results of the analysis for total organic halogens. These results ranged from 64.6 to 1,210 µg/L.

Continuous Monitoring of Secondary Chamber Exhaust

A continuous system was used to monitor levels of flue-gas carbon monoxide, carbon dioxide, oxygen, and oxides of nitrogen. The continuous monitoring system consisted of a sample-gas conditioning system, gas analyzers, and a data acquisition/recording system.

The concentrations of fixed gases and nitrogen oxides in the secondary- chamber discharge-stream were continuously recorded. The average values and ranges are given in Table D-1.8.

It was planned that oxygen concentration in the exhaust gas would be maintained at 3% to insure adequate waste/air contact in the secondary chamber. The oxygen content was maintained at greater than 6.5%, except for two brief periods in Test 5 when the concentration dropped to approximately 3.2%.

Table D-1.4. Concentration of PCBs in Waste Feed, ppm (mg/kg)

Isomer	Detection Limit	Test 1* Mix 2	Test 2 Mix 1	Test 3 Mix 1	Test 4 Mix 1	Test 5 Mix 3	Test 6 Mix 1
Cl (1)-PCB	2.5	ND/ND	48	30	50	3.4	27
Cl (2)-PCB	2.5	7/11	740	650	770	71	740
Cl (3)-PCB	2.5	28/35	1,060	1,000	1,200	200	1,100
Cl (4)-PCB	5.0	18/30	770	710	790	110	810
Cl (5)-PCB	5.0	0.6/ND	170	160	160	15	160
Cl (6)-PCB	5.0	ND/ND	ND	5.4	ND	ND	ND
Cl (7)-PCB	7.5	ND/ND	ND	ND	ND	ND	ND
Cl (8)-PCB	7.5	ND/ND	ND	ND	ND	ND	ND
Cl (9)-PCB	7.5	ND/ND	ND	ND	ND	ND	ND
Cl (10)-PCB	12.5	ND/ND	ND	ND	ND	ND	ND
Sum PCB		53.6/76	2,790	2,560	2,970	400	2,840

*Duplicate analysis
ND—Not detectable

Table D-1.5. Particulate Emissions

	Test 1	Test 2	Test 3	Test 5	Test 6
Total particulate, mg	30.200	115.700	44.700	77.500	14.10
Sample volume, dscf	45.796	48.916	36.116	39.107	19.72
Grain loading, gr/dscf	0.010	0.036	0.019	0.031	0.01
Corrected loading, gr/dscf*	0.015	0.055	0.023	0.037	0.017

*Corrected for stack oxygen concentration

Table D-1.6. HCL Emissions

	Test 1	Test 2	Test 3	Test 5	Test 6
Impinger chloride conc., mg/L	<3	<3	<3	9	<6
Impinger volume, mL	676	571	400	493	322
Sample volume, dscf	45.796	48.916	36.116	39.107	19.72
Gas chloride conc., mg/m^3	<2	<1	<1	4	<4
Stack vol. flowrate, m^3/h	92	130	69	100	67
HCL emissions, lb/h	<0.00 04	<0.00 03	<0.00 01	<0.00 09	<0.00 05

Table D-1.7. Total Organic Halogens

	Test 1	Test 2	Test 3	Test 5	Test 6
ug/sample	165,000	890	8,600	7,300	10,500
Sample volume, L	26.9	--	20.8	20.8	8.7
Concentration, µg/L	64.6	--	414	351	1,210

The combustion efficiencies for all runs exceeded the TSCA performance standard of 99.9%.

PCBs in the Stack Gas

A modified EPA Method-5 train was used to sample for organics. The various portions of the train were individually prepared and then composited. The composite was extracted and concentrated. PCBs were determined by GC/MS (EPA Method 680).

The results of the PCB analyses of the stack gas samples are given in Table D-1.9. No detectable amounts of any isomer group were detected except for the Test 5 samples where the concentration of PCBs was 2.4 $\mu g/m^3$.

Destruction and Removal Efficiency (DRE) of PCBs

Table D-1.10 presents the DRE of PCBs for the tests. The DREs were calculated using the analytical detection limits for the samples, except for the Test 5 samples where a concentration of PCBs was detected above the detection limit. The detection limits were sufficient to demonstrate DREs in excess of the 99.9999% TSCA performance standard for Tests 2, 3, 4, and 6. A review of all the data for Test 1 indicates that the TSCA DRE standard could not be demonstrated because of the high detection limit and the unexpectedly low concentration of PCBs in the waste feed used in that test. The DRE for Test 5 was 99.9989%. The presence of the PCBs in Test 5 was most likely a result of two periods of low excess oxygen in the secondary chamber. These results show that, for this unit, minimum permissible oxygen levels in the secondary chamber exhaust must be increased from that used for this program.

PCDDs and PCDFs

Composite samples of the furnace ash, scrubber water, and the stack gas sample from Test 6 were analyzed for PCDD and PCDF tetra-octa isomers. The tests results showed that none of those materials were present at the detection limits.

Operation

No operating problems were reported except that, due to lack of sufficient power capacity, primary chamber temperatures could not be maintained at desired levels. It was recognized that sufficient oxygen must be available in the secondary chamber to assure adequate destruction of PCBs.

Although the power requirements and operational experiences of the pilot-scale unit are not scalable to commercial size units, the pilot-scale tests and analyses establish the range and recommended operating parameters for the optimum operation of the full-scale unit.

Table D-1.8. Continuous Monitoring Emission Results

		Parts Per Million				Percent			
		NO_x		CO		O_2		CO_2	
Test	Combustion Efficiency, %	Avg.	Range	Avg.	Range	Avg.	Range	Avg.	Range
1	99.986	92.2	(79.8-95.0)	12.5	(9.2-17.2)	8.96	(8.05-11.7)	8.65	(6.0-9.10)
2	99.969	114.0	(84.9-107.0)	26.6	(24.4-33.5)	12.2	(8.74-11.6)	8.67	(8.0-8.96)
3	99.989	79.9	(62.3-73.6))	10.6	(10.1-12.3)	8.58	(6.5-13.0)	9.78	(7.76-10.9)
4	99.992	80.7	(76.4-96.6)	7.47	(6.76-7.84)	9.63	(8.5-10.75)	9.13	(8.25-9.90)
5	99.997	81.8	(66.0-93.0)	3.35	(2.44-4.88)	6.92	(3.22-12.2)	10.3	(8.46-11.7)
6	99.997	64.5	(63.0-66.0)	2.40	(2.4-2.9)	9.49	(6.5-11.8)	9.22	(8.3-10.8)

Table D-1.9. Concentration of PCBs in Flue Gas Samples, ng/Sample

Isomer	Detection Limit	Test 1	Test 2	Test 3	Test 5	Test 6
Cl (2)-PCB	190	ND	ND	ND	ND/ND	ND
Cl (2)-PCB	290	ND	ND	ND	1,800/1,900	ND
Cl (3)-PCB	370	ND	ND	ND	3,200/3,300	ND
Cl (4)-PCB	75	ND	ND	ND	500/800	ND
Cl (5)-PCB	75	ND	ND	ND	ND/ND	ND
Cl (6)-PCB	75	ND	ND	ND	ND/ND	ND
Cl (7)-PCB	110	ND	ND	ND	ND/ND	ND
Cl (8)-PCB	110	ND	ND	ND	ND/ND	ND
Cl (9)-PCB	110	ND	ND	ND	ND/ND	ND
Cl (10)-PCB	180	ND	ND	ND	ND/ND	ND
Sum PCB		ND	ND	ND	5.5/6	ND

ND Not detectable

Table D-1.10. Destruction and Removal Efficiency of PCBs

	Test 1	Test 2	Test 3	Test 4	Test 5	Test 6
Waste feed						
PCB concentrations µg/g	76.0	2,790.00	2,560.00	2,970	400.0	2,840.0
Feedrate, lb/h	115.4	61.50	61.50	61.5	106.4	79.8
Flue gas						
PCB concentration µg/g	<314.40	<709.73	<946.16	NA	2,416.32	<1,719.47
Flowrate, m^3/h	92.75	114.94	55.93	NA	88.22	51.66
Destruction and removal, %	>99.999	>99.999	>99.99992	NA	99.9989	99.99991

APPENDIX D-2

FLORIDA STEEL TSCA TRIAL BURNS [5,6]

Introduction

In 1982, an environmental audit of Florida Steel Corp.'s metal-recycling plant at Indiantown, Fla. was performed. The site was found to be contaminated with PCBs, which had leaked from hydraulic equipment used at the site. The PCB contaminated soil consisted of approximately 14,000 tons of fill material and 2,000 tons of sediments from the primary settling lagoon. The identified material also contained a significant amount of environment control (EC) dust that was landfilled onsite prior to being listed as a hazardous waste on Nov. 18, 1980.

As part of the technology evaluation to clean up the site, Shirco performed a trial run during the spring of 1986 with its pilot-scale unit. The trial burn was successful and infrared incineration was chosen as the preferred technology.

OH Materials Corp. (OHM) performed a TSCA PCB-disposal demonstration in Sept. 1987 at the site using its 100 ton/h transportable unit. In addition to PCBs, the site contained significant levels of heavy metals. (The cleanup of the soil was completed under a Superfund CERCLA 106 order with funds provided by Florida Steel.)

OHM complied with the majority of the criteria and standards for PCB disposal pursuant to 40 CFR 761 in the 1987 tests, but did not meet particulate emissions standards and the removal of PCBs in the incinerator ash to below 2 ppm. Therefore, OHM was not granted a TSCA approval for disposal of PCBs.

OHM performed a second demonstration at the Florida Steel site in Indiantown, Fla. in June 1988. Local gravel transported for the trial burn was spiked with Askarel containing low PCB concentration.The following is a description of the 1987 and 1988 TSCA tests and their results.

Feed Preparation

The site contained an assortment of different constituents, including EC dust, furnace slag, reinforcing bar, car bumpers, and railroad ties. The materials-handling system consisted of many components in order to handle this diverse waste stream. The system included a grizzly classifier, magnetic separator, rock crusher, weigh belt feeder, and associated conveyance systems.

For the 1987 TSCA test, the waste feed material was spiked with PCBs ranging in concentration from 5,000 to 20,000 ppm. For the 1988 TSCA test, local gravel transported for the trial burn was spiked with Askarel containing low-PCB concentration. Initial diagnostic tests revealed problems with particulate emissions, attributable to the high chloride content in the waste feed. High-PCB level Askarel was procured and used for spiking. The high-PCB Askarel reduced the chloride level in the waste feed at the desired PCB concentration.

Test Procedure

The 1987 demonstration included 5 runs, 2 with site soil spiked to 5,000 ppm PCBs and 3 runs to 20,000 ppm PCBs, feeding at a rate of 6 ton/h. Because analysis of the soil at the Florida Steel site indicated the presence of heavy metals, stack emission samples were analyzed for cadmium, copper, lead, and zinc. Operating data for the five tests runs are shown in Table D-2.1.

The 1988 demonstration included 5 diagnostic tests prior to the TSCA runs. Test parameters are shown in Table D-2.2. Results indicated that particulate emission is sensitive to chloride content of the feed. At about 7 ton/h feed, chloride content above 10,000 ppm resulted in particulate emissions over 0.08 gr/dscf. With high-PCB Askarel (having less chloride content), the 3 TSCA test runs were conducted on June 29-30, 1988. Operating data for these test runs are given in Table D-2.3.

Primary-chamber residence-time ranged from 15 min in the 1988 tests to 25 min in the 1987 tests. The 15-min time was performed with a bed depth of 1 in. nominal. The two-in. bed depth required a 23 min residence time to achieve PCB removal. Higher temperatures—1,570°F—were required with the 15-min time—versus 1,220°F for the higher residence time of 23 min.

Residence time in the secondary chamber ranged from 5.18 to 7.14 s, well above the 2-s standard for liquid PCBs incineration.

Results

Characteristics of the Feed

Waste feedrate for the 1988 trial burn averaged 13,835 lb/h with an average concentration of 5,600 ppm PCBs. The 1987 demonstration averaged 11,560 lb/h feedrate with a PCB level of 2,400 ppm, and 11,920 lb/h at 20,333 ppm PCBs.

Chloride content in the feed varied from 0.19% to 0.79% during the test runs with feedrates ranging from 21.8 lb/h to 93.2 lb/h of chlorides, respectively. In the five diagnostic tests conducted prior to the 1988 demonstration, chloride levels ranged from 0 to 19,290 ppm. Particulate emissions of 0.316 gr/dscf resulted from operations performed at the highest chloride content of 19,290 ppm accompanied by a feedrate of 143 lb/h chlorides. A chloride level of 9.645 ppm (0.96%), produced particulate emissions of 0.072 gr/dscf, below the 0.08 gr/dscf criteria. It is believed that the chloride content of the feed should be restricted to 0.9% with a feed rate of 133 lb/h of chlorides to avoid problems with particulate emission.

With the addition of supplemental fuel to the feed, there is a potential for the fuel to separate out from the soil substrate. With separation, the hazards imposed by the oil may be two-fold: (1) Oils may extract PCBs from the soil matrix, and oil drippings may spread PCB-contamination in the area under the feed conveyor and hopper, as well as in areas within the feed staging zone. (2) The fuel oil, an ignitable fluid, may cause flame to propagate from the primary chamber to open areas at the job site.

Tables D-2.4 and D-2.5 summarize the waste feed characteristics for the 1987 and 1988 test runs.

Characteristics of the Furnace Ash

Furnace ash from Run 1 of the 1987 tests contained 200 ppm PCBs. OHM believes that the inadequate removal of PCBs from the soil feed was a result of Run 1 being the initial operation with PCBs and that operating conditions for treatment of PCBs were not firmly established. Furnace ash from Run 2 of the 1988 demonstration also indicated levels of PCBs, but at a low concentration (19 ppm). OHM studied the problem and concluded that poor handling of the feed auxiliary fuel influenced the quality of fuel,

Table D-2.1. Operating Parameters for the 1987 Test Runs

	Primary Chamber				
Parameters	Run 1	Run 2	Run 3	Run 4	Run 5
Retention time, min.	22	25	23	23	23
Bed depth, in.	2	2	2	2	2
Primary exhaust temp., °F	1,347	1,476	1,550	1,318	1,442
Primary exit (B3) gs temperature, °F	1,159	1,154	1,221	1,339	1,265
Primary chamber pressure, in. H_2O	-0.05	-0.05	-0.05	-0.05	-0.05
	Secondary Chamber				
Secondary chamber temperature, °F	2,098	2,032	1,964	1,935	2,069
Secondary exhaust, °F	2,021	1,960	1,893	1,853	1,980
Residence time, s	5.58	5.77	5.18	5.45	5.35
Excess oxygen, %	6.9	7.0	7.0	6.9	6.0

Table D-2.2. Operating Parameters for the 1988 Diagnostic Runs

Parameters	Run 1	Run 2	Run 3	Run 4	Run 5
Waste feedrate, lb/h	16,225	14,115	14,835	14,125	13,925
PCB feed level, ppm	0	8,187	4,094	2,456	2,456
Feed total chlorides, ppm	0	19,290	9,645	5,787	5,787
Chloride rate, lb/h	0	272.3	143.1	81.7	80.6
Particulates, gr/dscf adjusted to 7% O_2	0.31	0.316	0.072	0.057	0.057

Table D-2.3. Operating Parameters for 1988 Test Runs

	Primary Chamber		
Parameters	Run 1	Run 2	Run 3
Retention time, min.	1	15	15
Bed depth, in.	1	1	1
Primary exhaust temp., °F	1,584	1,566	1,601
Primary chamber (A2 temp., °F	1,450	1,434	1,405
Primary exit (B2) temp., °F	1,555	1,605	1,579
Primary chamber pressure, in H_2O	-0.02	-0.01	-0.02
	Secondary Chamber		
Secondary chamber temp., °F	1,987	1,996	1,995
Secondary exhaust temp., °F	1,914	1,924	1,921
Residence time, s	6.11	6.04	6.31
Excess oxygen, %	5.01	4.94	4.96

Table D-2.4. Feed Characteristics and DRE forthe 1987 Tests

Parameters	Run 1	Run 2	Run 3	Run 4	Run 5
Waste feedrate, lb/h	11,470	11,660	11,798	11,817	12,144
Feed PCB level, ppm (OHM GC/MS Method 680)	4,570	2,810	15,100	13,900	13,900
PCB rate, lb/h	52.4	32.8	178	164	164
PCB stack emissions, ug/h	130	112	166	14,200	26,000
PCB DRE	99.999999	99.999999	99.999999	99.999998	99.999998
Feed total chlorides, %	<0.19	<0.26	0.79	0.68	0.71
Feed PCB level, ppm (EPA lab PGC/ECD)	2,600	2,400	13,000	18,000	30,000
Heavy Metals in feed, ppm					
Lead	375	459	332	434	352
Zinc	2,630	4,790	2,280	4,450	2,430
Cadmium	8.3	9.9	7.4	11.3	7.9

which in turn affected the effectiveness of PCB removal in Run 2. Consequently, OHM instituted a procedure to preclude recurrence of such incidents. This corrective action is proprietary to OHM. One solution is to closely monitor the furnace ash PCB content during operation.

PCDDs were not detected in any of the furnace ash from all tests in 1987 and 1988. Furnace ash from the 1987 tests contained 2,3,7,8-TCDD equivalents below 1 ppb and are not of concern. Sift-through ash, however, contained higher levels of PCDFs, but operations were revised to transfer the ash back to the primary chamber via a closed loop. Therefore, exposure to PCDFs from sift-through ash is precluded. PCDFs in the 1988 ash were slightly higher, but each PCDF homolog converts to 2,3,7,8-TCDD equivalents below levels of concern.

Table D-2.5. Feed Characteristics and DRE for 1988 Tests

Parameters	Run 1	Run 2	Run 3
Waste feedrate, lb/h	13,921	13,856	13,728
Feed PCB level, ppm (OHM) (Method 680, GC/MS)		6,966 (avg. 3 runs)	
PCB rate, lb/h	96.97	96.52	95.63
PCB stack emissions, 10^{-6} lb/h	8.24	5.63	5.11
PCB DRE	99.999992	99.999994	99.999995
Feed total chlorides, %	0.54	0.36	0.38
Chloride rate, lb/h	75.2	49.9	52.2
Feed PCB level, ppm (EPA lab) (PGC/ECD for Aroclors)	5,700	5,20	5,900

Results of the furnace ash characteristics for the 1987 and 1988 tests are given in Tables D-2.6 and D-2.7.

Destruction and Removal Efficiency (DRE) of PCBs

Stack emissions of PCBs during the 1988 tests ranged from 0.000005 lb/h to 0.000009 lb/h with feedrates of PCBs of about 95 lb/h. DRE met the TSCA performance standard of six 9s DRE (99.9999%) required of incinerators. For incineration of non-liquid PCBs, the mass air emissions standard for PCBs is 0.001 gm PCBs out/kg PCBs in, equivalent to the six 9s DRE. All of the 1987 test runs complied with the emissions standard. The actual DRE values for the 1987 and 1988 runs are shown in Tables D-2.4 and D-2.5.

Dioxins and Furans Stack Emissions

PCDDs were not detected in stack emissions samples from all tests. PCDFs however, were detected at low levels in the stack emission samples. The 1988 tests indicated levels of PCDFs ranging from 12.5 to 25.9 ng/m^3. Conversion of PCDFs to 2,3,7,8-TCDD equivalence transforms these numbers to levels ranging from 1.36 to 2.76 ng/m^3 of 2,3,7,8-TCDD, well under the 10 ng/m^3 level of concern. Emissions of PCDFs from the 1987 tests were all below the level of concern.

Stack emission standards do not exist for dioxins and furans. However, RCRA performance standards are in place under 40 CFR 264.343 for hazardous waste incinerators. The incinerators must comply with a DRE of 99.9999% for destruction of the principal organic hazardous constituents (POHCs) in treating designated dioxin-containing hazardous wastes. With PCBs as the POHC under consideration, the six 9s DRE demonstrated for PCBs by the unit would comply with the requirements for RCRA incinerators treating designated dioxin-containing wastes. Tables D-2.8 and D-2.9 provide the PCDD and PCDF emission data for the 1987 and 1988 tests.

Other Organic Stack Gas Emissions

TSCA regulations require monitoring for total chlorinated hydrocarbons (RC1) when initially treating PCBs. The sampling method used for monitoring stack emissions for volatile RCls is the volatile organic sampling train (VOST). Hydrocarbons other than chlorinated organics were assessed as well. OHM collected VOST samples and provided data for the 1987 demonstration. Therefore, EPA did not require additional VOST monitoring during the 1988 trial burn.

Data taken during the 1987 tests on volatile and semivolatile organic species in the stack gas indicated no significant levels of emissions except for one compound, bis(2-ethylhexyl)phthalate during Run 3. Phthalate compounds are widely used in the plastics and elastomer industry as a plasticizer. OHM used sealants that contain phthalates to repair a piece of the incinerator equipment. Contamination of the stack sample likely occurred from the sealant. Other organic emissions were not significant when compared to the existing health-related standards and criteria.

Volatile and semivolatile organic compounds at concentrations less than established standards for direct inhalation included:

- Chlorinated methane, methylene, and other halomethanes.
- Aromatic volatiles and semivolatiles such as benzene, ethylbenzene, styrene, toluene, naphthalene, fluoranthene, phenanthrene, anthracene, pyrene, and other benzene-related compounds.

Table D-2.6. Furnace Ash Analysis for the 1987 Tests

Parameters	Run 1	Run 2	Run 3	Run 4	Run 5
PCBs in ash, ppm (OHM) (Method 680 GC/MS)	230	0.265	ND	ND	ND
PCBs in ash, ppm (EPA lab) (PGC/ECD for Aroclors)	200	<2	<2	<2	<2
PCDDs in ash, ppb	ND	ND	ND	ND	ND
PCDFs in ash, total, ppb	1.14	0.19	0.15	<0.71	<0.50
2,3,7,8-TCDD	0.27	0.07	<0.04	0.06	<0.03
TCDDs	0.87	0.12	<0.04	0.06	<0.03
PCBs in sift-through ash, ppm (OHM & EPA labs)	--	--	--	<2	<2
PCDDs in sift-through ash, ppb	--	ND	ND	ND	--
PCDFs in sift-through ash, ppb					
2,3,7,8-TCDF	--	2.00	3.70	1.50	--
TCDFs	--	6.6	14.1	6.2	--
Total PCDFs	--	9.06	23.9	8.06	--
2,3,7,8-TCDD equivalent	--	0.702	1.488	0.626	--
Heavy Metals in ash, ppm					
Total metals					
Lead	772	489	494	447	510
Zinc	8,940	5,260	6,240	5,140	6,120
Cadmium	10.9	9.0	6.0	7.2	7.0
EP Tox results					
Lead	<0.1	<0.1	<0.1	<0.1	<0.1
Zinc	<0.1	<0.1	6.68	6.60	<0.1
Cadmium	<0.1	<0.1	<0.1	<0.1	<0.1

ND = Not detectable

Table D-2.7. Furnace Ash Analysis for the 1988 Tests

Parameters	Run 1	Run 2	Run 3
PCBs in ash, ppm (OHM) (Method 680 GC/MS)	0.946	33.61	1.607
PCBs in ash, ppm (EPA lab) (PGC/ECD for Aroclors)	<2	19	<2
PCDDs in ash, ppb	ND	ND	ND
PCDFs in ash, total, ppb	3.32	19.36	2.54
2,3,7,8-TCDF	0.17	0.825	0.13
TCDFs	0.41	3.10	0.25
2,3,7,8-TCDD equivalent	0.179	1.09	0.165

- Oxygenated hydrocarbons including phthalates, phenol, and oxygenated benzene-related compounds.

HCl, NO_x and RCl Emissions

Hydrogen chloride (HCl) emissions ranged from 0.07 to 0.22 lb/h, below the TSCA criteria of 4 lb/h for HCl. HCl removal efficiency was greater than 99%.

NO_x emissions ranged from 0.86 to 2.53 lb/h, or with the thermal load of the secondary combustor of about 14 MBtu/h, ranged from 0.0614 to 0.181 lb/MBtu. This compares favorably with the 0.2 lb/MBtu NO_x standards for steam-generating boiler units of 250-MBtus or more, for gaseous fuels at 40 CFR 60.40, and with standards for solid (0.50 lb/MBtu) or liquid fuels (0.40 lb/MBtu).

Total chlorinated organics (RCl) were not obtained for the 1988 test; however, the 1987 tests indicated total RCls to range from 0.00133 to 0.015 mg/m^3. The Volatile Organic Sampling Train (VOST) was used in sampling for RCls. In addition, the MM5 samples (semi-VOST) were analyzed for RCls, but only traces of 1,2,4-trichlorobenzene were detected. The highest chlorinated hydrocarbon detected was methylene chloride at 0.0102 mg/m^3 concentration. To establish a perspective for levels of RCl emissions, OSHA PELs (Occupational Safety and Health Agency, permissible emission level) for methylene chloride

and chloroform are 1,714 and 240 mg/m^3, respectively. The highest total RCl was 0.015 mg/m^3.

Particulate Emissions

Particulate emission from both TSCA demonstrations ranged from 0.02 to 0.10 gr/dscf (adjusted for 7% oxygen), as compared to the TSCA criteria of 0.080 gr/dscf. Particulate emissions of 0.10 gr/dscf from Run 3 of the 1987 trial burn and 0.316 gr/dscf from Run 2 of the 1988 diagnostic runs were above the criteria. However, all test runs during the 1988 demonstration complied with the criteria. Tables D-2.2, D-2.8, and D-2.9 provide particulate emission data for the 1987 and 1988 tests. Factors that contributed to the high particulate emissions include chloride feedrate and scrubber operating technique. For example, the 0.10 gr/dscf particulate emission in Run 3 (1987) was caused by a scrubber malfunction, and the 0.316 gr/dscf particulate emission in Run 2 (1988) occurred at a chloride concentration of 19,290 ppm. Chloride feedrate is dependent on the waste feedrate and chloride concentration. All three factors -- chloride feedrate, chloride content, and waste feedrate -- influence particulate emission and need to be monitored.

Scrubber operating techniques—also critical to controlling pollutant emissions (primarily particulates), must be maintained carefully. This information is, however, proprietary to OHM.

Combustion Efficiency

The TSCA performance standard for PCB incinerators of 99.9% for combustion efficiency (CE) is related to the ratio of carbon monoxide, to carbon dioxide. Based on the data presented in Tables D-2.8 and D-2.9, the unit met the TSCA standard for CE during the 1987 and 1988 tests.

Mobility of Heavy Metals

Data presented for the 1987 tests in Tables D-2.4 and D-2.6 show that the concentrations of metals in the waste feed are similar to the concentrations in the furnace ash and indicate that the mass flow of these species remain with the high mass flow of furnace ash. The EP Tox data on the furnace ash is below the toxicity characteristic standards; there is no comparative data on the waste feed to determine whether the thermal treatment reduced the mobility of heavy metals based on the results.

Scrubber Water

Scrubber water for the 1988 test contained less than 1 ppb PCBs. All aqueous waste generated during PCB disposal activities must be below 3 ppb to be classed as non-TSCA regulated waste. The 1987 trial burns also resulted in scrubber solutions with PCBs concentration less than 1 ppb. OHM complied with Florida regulations, which includes discharge limits of 0.001 mg/L PCBs, 0.2 mg/L lead, and 0.04 mg/L cadmium. The EPA lab analysis was performed at a detection limit of 2 ppm PCBs because the 3-ppb criteria for PCBs had not been established during the 1987 demonstration.

No PCDDs or PCDFs were detected in the scrubber water.

Scrubber water analysis data for the 1987 and 1988 tests is presented in Tables D-2.10 and D-2.11.

Operations

The OHM infrared incinerator operated without any major problems during the 1987 and 1988 TSCA test runs. Interruptions in the tests occurred when problems developed with equipment breakdown and when modifications in stack sampling equipment were necessary to comply with EPA protocols. The 1988 tests went smoothly because OHM had seven months of experience in treating the Florida Steel site.

Several operating procedures and other factors were identified based on these tests to meet TSCA performance requirements (such as PCB in furnace ash and particulate emission). These have been described earlier while discussing the results of the 2 test runs.

Other operations related problems are discussed in Appendix D-3, where information on treatment of 18,000 tons of soil at the Florida Steel site by OHM is presented.

Several modifications including proprietary changes to the unit were made between the 1987 and 1988 tests. These included:

1. Ash collection system, including the sift-through ash from the feed conveyor.
2. Ash quench method.
3. Scrubber blowdown practice.
4. Feed-hopper feeding mechanism.
5. Air compressor replaced with one of higher capacity.

Table D-2.8. Stack Emissions Data for the 1987 Tests

Parameters	Run 1	Run 2	Run 3	Run 4	Run 5
PCBs, ng/m^3	<9.5	<77.3	<772	<1315	<578.4
PCDDs total, ng/m^3	ND	ND	ND	ND	ND
PCDFs total, ng/m^3	0.86	1.70	ND	7.42	2.10
2,3,7,8-TCDF	0.54	0.83	ND	1.97	1.01
Total TCDFs	0.86	1.70	ND	7.42	2.10
HCl emission, lb/h	<0.08	<0.07	<0.22	<0.16	<0.12
HCl removal, %	>99.6	>99.8	99.8	99.8	99.9
Particulates, gr/dscf @ 7% O_2	0.02	0.03	0.10	0.07	0.08
Oxygen, %	11.6	11.7	13.4	13.54	12.7
Carbon monoxide, ppm	3.0	5.0	1.0	1.0	1.0
Carbon dioxide, %	5.2	6.3	5.2	5.2	5.2
Combustion efficiency, %	99.99	99.99	99.99	99.99	99.99
Heavy metals, mg/m^3					
Lead	2.38	5.74	13.5	10.7	11.7
Zinc	3.51	3.82	20.9	13.2	15.1
Cadmium	0.517	0.89	1.34	1.07	1.34
Copper	0.39	0.598	1.04	0.859	1.02

Table D-2.9. Stack Emissions Data for the 1988 Tests

Parameters	Run 1	Run 2	Run 3
PCBs, ng/m^3	<360	<242	<232
PCDDs total, ng/m^3	ND*	ND	ND
PCDFs total, ng/m^3	17.2	12.5	25.9
2,3,7,8-TCDF	<5	<5	<5
Total TCDFs	13.8	10.0	18.4
2,3,7,8-TCDD equivalent	<2.19	<1.36	<2.76
HCl emission, lb/h	0.088	0.076	0.115
HCl removal, %	99.88	99.85	99.78
Particulates, gr/dscf @ 7% O^2	0.053	0.061	0.056
Oxygen, %	13.5	13.6	13.4
Carbon monoxide, ppm	1.2	4.3	1.1
Carbon dioxide, %	4.8	4.8	5.0
Combustion efficiency, %	99.99	99.99	99.99

ND—<5.0 ng/m^3/homolog det. limit

Table D-2.10. Scrubber Water Data for the 1987 Tests

Parameters	Run 1	Run 2	Run 3	Run 4	Run 5
PCB in scrubber water, ppb	ND	ND	ND	ND	ND
PCDD in scrubber water, ppb	ND	ND	ND	ND	ND
PCDF in scrubber waer, ppb	ND	ND	ND	ND	ND
Scrubber pH, avg.	7.48	7.91	8.46	8.55	8.24
Venturi pressure drop	24.4	16.8	25.9	25.0	27.0
Scrubber water components, mg/L					
Dissolved solids	5,118	5,520	7,920	7,670	6,170
Lead	7.96	7.73	9.73	11.9	9.92
Zinc	77.3	86.3	75.6	75.1	51.9
Cadmium	1.57	2.12	0.97	1.18	0.892
Copper	1.88	2.66	1.65	1.49	1.48

Table D-2.11. Scrubber Water Data for the 1988 Tests

Parameters	Run 1	Run 2	Run 3
PCB in scrubber water, ppb Cl_3 detected only	0.21	0.02	0.146
PCDD in scrubber water, ppb	ND	ND	ND
PCDF in scrubber water, ppb	ND	ND	ND
Scrubber pH, avg.	6.75	7.06	7.14
Venturi pressure drop, in H_2O	26.7	26.1	26.4

APPENDIX D-3

FLORIDA STEEL COMMERCIAL CLEANUP [5-7]

Introduction

Florida Steel Corp. operated a metal recycling plant in Indiantown, FL, which was closed in 1982 for economic reasons. An environmental audit of the plant site revealed contamination with PCBs that had leaked from hydraulic equipment used there.

A complete site evaluation was completed in 1984, which included more than 500 soil borings and 1,400 samples. The PCB-contaminated materials consisted of approximately 14,000 tons of fill material and 2,000 tons of sediments from the primary settling lagoon. The identified material also contained a significant amount of environmental control (EC) dust which was landfilled onsite prior to being listed as a hazardous waste on Nov. 18, 1980.

An above-ground vault was constructed by O.H. Materials (OHM) during the summer of 1985 to store and isolate the material from the environment while disposal alternatives were evaluated. The alternatives were evaluated during the spring of 1986, at which time Shirco performed a trial burn with their 80-lb/h portable unit. The trial burn was successful and infrared incineration was chosen as the preferred technology.

Site work began in Mar. 1987 with the preparation of the work areas for the waste storage, ash storage, and incinerator. The site had 2 large buildings under which all the equipment was installed (with the exception of the water treatment system). A new impervious concrete floor was poured in all work areas. Also during this time, an inflatable building (150 x 300 ft) was installed over the vault to control dust and moisture while the waste material was being removed.

The incinerator arrived on site in August and was mechanically installed in 11 days. An initial series of mechanical and electrical checkouts were performed over the next 2 weeks. The commercial burn began in Oct. 1987 and lasted until May 1988, during which time 18,000 tons of PCB-contaminated soils and sediments were burned.

OHM used a 100-ton/h incinerator purchased from Shirco. Several modifications were incorporated into the unit to improve its mobility/adaptability to onsite service and safety. The largest modification eliminated the 52-ft-tall insulated emergency stack. The stack was eliminated for several reasons, including problems with erecting the stack and the potential of releasing unscrubbed gases into the atmosphere. A new emergency backup system was installed to include a direct-drive induced-draft fan and scrubber pump. The emergency backup system is activated by a power failure or the loss of the primary ID fan.

Feed Preparation

The waste material contained an assortment of different constituents,including EC dust, furnace slag, reinforcing bar, car bumpers, and railroad ties. The materials-handling system consisted of many components to handle this diverse waste stream. The different systems used were:

- Track Hoe
- Grizzly classifier
- Magnetic separator
- Jaw crusher
- Roll crusher
- Front-end loader
- Pubmill
- Plastic shredder
- Wood chipper

After the waste was prepared for incineration, it was sampled for PCB and moisture analysis and stockpiled. The waste was then fed into the feed hopper by a front-end loader.

Test Procedure and Results

Test procedures used in the treatment were similar to the ones used by OHM in TSCA demonstrations of the incinerator in Sept. 1987, and again in June 1988. These TSCA demonstrations (including procedures and test results) are described in Appendices D-1 and D-2. No specific performance data for the commercial remediation of the 18,000 tons of contaminated soil by OHM is available.

Operations

A problem was discovered during the checkout with regard to the wire woven belt. The actual belt that was installed in the full-scale unit had thicker gauge wire than the pilot unit and thus had a larger pore space, which allowed the fine Florida sand to sieve through the belt. The amount of material that sieved through the belt was greater than that which the sieve-through collection-system could handle. This problem was solved by installing a smaller- gauge belt.

During the first several months of the project, many problems were encountered that directly affected the incinerator utilization. The utilization is a measure of the time that waste was actually fed into the incinerator. The equipment utilization for Oct. was 50%. The utilization increased to more than 90% for the final month, which resulted in an overall project utilization of 61%.

Economics

OHM performed the complete site soil treatment (18,000 tons) at an average cost of approximately $300/ton. The OHM scope of work included:

- Excavation of site
- Transport of processed ash to a building
- Construction of vault
- Water treatment
- Dewatering of waste ponds
- Vendor profit
- Unit mobilization and waste processing

The cost does not include ash disposal.

APPENDIX D-4

LASALLE ELECTRIC COMMERCIAL CLEANUP [8-12]

Introduction

The LaSalle Electric Utilities (LEU) site is located in the city of LaSalle in north-central Illinois.

LEU is a former manufacturer of electrical equipment. Operations at the plant began prior to World War II, and in the late 1940s the plant began using polychlorinated biphenyls (PCBs) in the production of capacitors. This manufacturing practice continued until Oct. 1978. In May 1981, the company ceased operations at the LaSalle plant after it was ordered to do so by the Illinois Attorney General and the Illinois Environmental Protection Agency (IEPA). The LaSalle facility has been abandoned since that time.

Information is limited on the waste management practices of the company both on and off the property. Undocumented reports allege that PCB-contaminated waste oils were regularly applied as a dust suppressant both on and off the property as late as 1969. Following the regulation of PCBs, manifests document the disposal of PCBs at all regulated facilities.

Concentrations of PCBs in the composite soil samples from soil on the LEU source area range from 0.20 ppm (lower detection limit) to as high as 17,000 ppm. PCB concentrations in composite soil samples from nearby offsite areas range from 0.20 ppm to as high as 2,600 ppm. The Remedial Investigation of the area characterized soil off the plant property to the degree necessary to implement remediation in this area. The need for remediation in the areas surrounding the plant (specifically defined as the area outside of the security fence) was viewed as significant, due to direct exposure to PCB at residences and businesses.

Westinghouse/Haztech, Inc. (WHI) was contracted to perform onsite remediation of the LEU offsite area using their transportable 100 ton/d Shirco unit. The remediation requirements were to clean up the area to a PCB concentration of 5 ppm to a 12-in. site depth, and 10 ppm below 12 in. The soil which is removed was to be replaced with clean soil.

Prior to beginning the remediation work, WHI performed a Demonstration Burn using their unit to satisfy substantive requirements of the IEPA and TSCA for the incineration of PCBs. The test program used a waste feed mixture that had been spiked with PCB material to extend the permitted range of operating conditions for the unit. Based on the results of these tests, IEPA issued a conditional approval to WHI for treatment of the LEU offsite soil. Among other things, the approval limited incineration of soil with PCB concentrations no greater than 50 ppm. Specific details of the operating permit that define the regulatory constraints on the operation of the unit are presented in the Operations section of this discussion.

WHI began incineration of the soil in late 1988 and expects to complete processing approximately 24,000 tons of soil by the end of 1989. WHI's bid price for the thermal incineration work is approximately $300/ton, whichincludes permits, utilities, sampling and analysis and vendor profit but does not include waste excavation, feed preparation and ash disposal.

In their first three months of operation, WHI is experiencing unit availability in the 80 to 90% range.

Feed Preparation

Excavated soil is stockpiled in a bermed plastic-lined containment area adjacent to the unit. The area is covered with a tarpaulin to minimize weather effects, runoff, and increased moisture content. Excavated soil is then transferred to a covered feed

makeup area where a chopping/screening operation is used to produce a feed stream with no individual piece larger than 1 in. This power screen consists of a hopper (into which a loader drops the soil), a set of knives and two vibrating screens. The rotating knives break up dirt clods and any other soft material before the material reaches the screens. Two vibrating screens are used to segregate large particles (larger than 1 in.) from smaller ones. The large particles are then either reprocessed, decontaminated, or handled in another piece of equipment, whichever is appropriate.

This waste preparation equipment is varied according to the type of waste requiring decontamination. For example, if large pieces of wood are in the waste, a wood chipper is used. Processed waste is placed in a stockpile and is moved to the weigh hopper using a loader.

Waste is dumped into the weigh hopper (14-ton capacity) by a loader until the hopper is filled to the desired level. At that time, feed to the weigh hopper will be stopped and waste will be conveyed from the weigh hopper to the unit's feed hopper via a totally enclosed belt conveyor. The WHI unit is also covered by a temporary building structure.

Prior to dropping into the feed hopper, the waste drops into an enclosed screw conveyor where fuel oil is mixed with the waste to control fugitive dust in the feed hopper and to increase the heating value of the waste. The feed hopper has a live bottom consisting of six 9-in. screws, which convey the waste forward to an enclosed opening on the top of the incinerator. The waste falls through the opening and forms a layer across the width of the belt.

One concern about the power screen operation pertains to passing of long slender items such as nails and railroad spikes, which cause problems in the processing downstream.

Characteristics of the Soil

The PCB-contaminated soil from the LEU offsite areas was excavated to a 12- in. depth in most areas, and to larger depths (up to 5 ft) in other areas. The criterion was to excavate to a depth of 12 in. based on a cleanup level of 5 ppm, and below that depth as required to achieve a cleanup level of 10 ppm.

The characteristics of the soil in the area vary from location-to- location. At most locations, the soil consists of silt and sand occasionally interbased with clay. Top soil is also present in many areas.

The contaminants of concern in the LEU offsite area are PCBs. No other materials above normal background levels have been detected in this area. Concentrations of PCBs in the composite soil samples from this area range from less than 0.20 ppm to as high as 2,600 ppm. (The lower limit is the analytical detection limit.) Additional grab samples (from the most heavily contaminated residential yard) revealed a hot spot containing up to 5,800 ppm of PCBs. Concentrations typically average about 75 to 125 ppm in most yards in the area. The depths of contamination range from 0 to 12 in. in most areas, to as much as 5 ft at a few heavily contaminated locations. The total volume of soil that is contaminated above the 5-ppm level is approximately 28,690 yd^3.

Soil sampling for dioxins and furans did not detect any tetra dioxins, including 2,3,7,8-techlorodibenzo-p-dioxin (TCDD). However, penta, hexa, hepta, and octa dioxin isomers as well as tetra, penta, hexa, hepta, and octa furan isomers were detected in PCB-contaminated areas at ppb concentrations.

PCB, dioxin, and furan data were submitted to the Agency for Toxic Substances and Disease Registry (ATSDR) to evaluate the degree of health concern and the possible need for an immediate removal of contaminated material. The resulting evaluations indicated that detected concentrations are below levels of concern for human health.

Sampling for additional organic contaminants resulted in identification of polychlorinated naphthalenes, aliphatic hydrocarbons, and polynuclear aromatic compounds (anthracene, fluoranthene, and pyrene) directly west of factory buildings. None of these compounds were found in concentrations exceeding 3 ppm. Diethylhexylphthalate was identified in 5 samples from this area at a maximum concentration of 20 ppm; it has been used as a replacement for PCBs as dieletric additive, which may account for its presence at LEU.

Operations

Based on the Demonstration Burn discussed above, an operating permit was issued to WHI on Nov. 23, 1988. The fully-approved commercial cleanup began on Nov. 29, 1988, as defined by the following permit conditions:

Findings

1. Particulate emission limit of 0.08 gr/dscf corrected to 12% carbon dioxide.
2. Carbon monoxide limit of 500 ppm corrected to 50% excess air.

3. Those soils found with PCBs concentration greater than 50 ppm shall not be incinerated.

4. The hydrogen chloride (HCl) emissions shall not be allowed to exceed 4 lb/h.

5. The nitrogen oxides (NOx) emissions shall not be allowed to exceed 100 ppm.

6. The sulfur content of the fuel oil additive for feed Btu enhancement shall not exceed 0.5 wt%.

Conditions of Approval

The incinerator shall be operated in compliance with the following conditions:

1. Soils to be treated shall be sampled with a daily composite and analyzed for the following parameters for the first two weeks of operation:

   a. PCBs concentration in the soil

   b. Soil moisture content

   If any of the daily composite samples are found to have a concentration of PCBs greater than 50 ppm, the daily composite and analysis shall be continued for an additional two weeks. If no daily composite samples during the two-week period are greater than 50 ppm, then weekly composite sampling and analysis may be conducted.

   If any of the weekly composite samples are found to exceed 50 ppm of PCBs, then daily composite sampling and analysis shall be performed until 10 consecutive daily samples are found to be less than 50 ppm, at which time weekly composite sampling may then resume.

2. The secondary combustion chamber residence time for combustion gases shall be maintained greater than 2 seconds.

3. The carbon monoxide emissions shall be maintained less than the following limits:

   a. 500 ppm at any time

   b. 100 ppm for 3 minutes

4. Combustion efficiency (CE) shall be maintained greater than 99.9% efficient and shall be calculated and recorded at 15-min intervals based on the following formula related to measure carbon monoxide and carbon dioxide.

   $CE = 100 \times (CO_2)/(CO_2 + CO)$

5. The incinerator and air-pollution-control equipment shall be operated in a manner similar to operation during the stack testing. The incinerator shall be operated to maintain operating parameters within the following parameter ranges:

   a. The soil feedrate into weigh hopper: 6.0 ton/h not to exceed 12 tons in 2 h

   b. The feed screw rate: 70% or less

   c. The soil residence time: 15 min or greater

   d. The fuel oil addition: 0 to 600 lb/h

   e. Primary Zone A: at 1,200°F or greater

   f. All other primary zones: at 1,400°F or greater

   g. The secondary combustion chamber midpoint temperature: 1,920°F or greater, but not to fall below 1,820°F

   h. The monitored oxygen concentration: maintained at 4% or greater

   i. The packed tower scrubbant pH: 6.0 or greater

   j. The demister pressure drop: 3.0 in. WC or less

   k. The outlet quench temperature: maintained less than 212°F

   l. The quencher blowdown: 30 gpm or greater

Waste Feed Cutoff Conditions

The incinerator's programmable controller shall be set to stop the contaminated-soil feed augers when the incinerator is operating outside the following parameter limits:

1. All primary combustion chamber zones except A1 shall be maintained greater than 1,400°F.

2. The PCC static pressure shall be maintained at 0.01 in. WC or less with 5 s delay.

3. The SCC midpoint temperature shall be maintained greater than 1,820°F.

4. The oxygen concentration leaving the SCC shall be maintained greater than 3.0%, with a 3-min delay.

5. The carbon monoxide concentration shall not exceed the following:

   a. 400 ppm, with a 30 s delay

   b. 100 ppm for 3 min

6. The Calvert scrubber pressure-drop shall be maintained greater than 30 in. WC with a 5-min delay.

7. The stack temperature shall be maintained less than 200oF, with a 5-min delay.

Emission Rates

Based on the average of the 4 emission tests and the allowable rates established in this approval, the emissions from the treatment of soil are expected to be as follows:

Contaminant Emissions

Actual	Particulates	CO	THC	NO_x	SO_2	HCl
lb/h	0.40	0.02	0.01	1.57	--	0.11
Allowed						
lb /h	1.81	0.16	0.09	2.54	6.27	4.0
ton/yr	7.93	0.70	0.39	11.1	27.50	17.5

APPENDIX D-5

TWIN CITIES PILOT-SCALE TESTS [13]

Introduction

Contracted by both the Federal Cartridge Co. and Honeywell, Shirco Infrared Systems (now ECOVA Corp.) performed demonstration tests with the pilot-scale Shirco unit at the Twin Cities Army Ammunition Plant (TCAAP) located in New Brighton, MN. The purpose of these tests was to demonstrate the Shirco technology capability relative to the decontamination of polychlorinated biphenyl (PCB) laden soils. The data obtained from the testing was subsequently used to evaluate site-remediation techniques. In addition, triplicate sampling and analysis data obtained from a PCB-spiked soil and performed in accordance with TSCA guidelines was used for operating permit approval. During the entire PCB-spiked-soil incineration portion of the test program, representatives of the USEPA Office of Toxic Substances and Midwest Research Institute monitored the operation.

ECOVA first demonstrated the pilot-scale unit during the week of Jan. 20, 1987. High particulate emissions, failure of the Continuous Emissions Monitor (CEM) and lack of feed shutdown interlocks negated those trials. A second demonstration test was performed at the TCAAP on May 27, 1987. This involved completion of 3 consecutive successful runs, each of 2 h duration.

In the May 1987 tests, the pilot-scale unit satisfactorily demonstrated the ability to meet the prescribed non-liquid PCB incineration TSCA performance standard of 0.001 g PCB stack emissions per kg PCB introduced into the incinerator. This standard represents a 99.9999% destruction and removal efficiency. In addition, the pilot-scale unit destroyed PCBs in soil to a level below 2 ppm per resolvable gas chromatographic peak.

Feed Preparation

Site and test material preparation was performed by Federal Cartridge Corp. personnel. The soil was obtained from the Federal Cartridge Corp. and Honeywell sites for the Jan. 1987 tests and for the May 1987 tests, from the Federal Cartridge Corp. site. In each case, the soil was spiked with PCBs. For the Jan. 1987 tests, the PCB content ranged from 48 to 28,000 ppm, whereas PCB concentration was approximately 45,000 ppm for the May 1987 tests. The waste feed was manually introduced into a feed hopper onto a flighted metering conveyor located at the end of the furnace The metering belt is synchronized with the furnace belt to control the material feedrate. The feed hopper is mounted above the furnace belt. There is an adjustable guillotine-type gate at the discharge end of the metering section. This gate assures that an amount of material no greater than that which can pass through a preset slot size can enter the furnace. The slot size is adjusted by the height of the gate above the conveyor belt and was set at 1 1/2 in. for the tests.

Test Procedure

A total of 7 tests were performed in Jan. 1987. Table D-5.1 presents the operating data for these tests.

The TSCA demonstration trial burns conducted on May 27, 1987 were triplicate 2-hour tests at planned feedrates of 100 lb/h of site soil. During the first test, the M5 sampling train indicated potential problems with particulate emissions. The source of the problem was traced to the high solid feedrate. Therefore, the feedrate was reduced about 10%, and a fourth test was planned, repeating only the M5 sampling

Table D-5.1. Operational Data for the January 1987 Tests

Test No	Primary Chamber Temp., °F	Residence Time Primary Chamber min	Secondary Combustor Temp., °F	Residence Time Secondary Chamber s	Solids Feedrate lb/h	PCB Level Feed ppm	PCB Feedrate lb/h
1	1,600	15	2,175	2.04	95.8	48	0.002
2	1,600	15	2,175	2.14	84.0	1,070	0.041
3	1,600	15	2,200	1.73	83.2	28,000	1.058
4	1,600	15	2,200	1.82	83.2	18,000	0.680
5	1,600	15	2,200	1.89	129.0	24,000	1.406
6	1,600	15	2,150	1.85	25.0	8,600	0.491
7	1,600	15	2,200	2.12	106.0	418	0.418

procedure. Table D-5.2 provides the operating parameters for these tests.

Discharges from the pilot-scale unit included stack emissions, furnace ash, and scrubber water. ECOVA collected and analyzed samples from the stack, as well as solids and liquids generated. Split samples of the solids and liquids were collected by EPA for analysis.

Results

A summary of the Jan. and May 1987 test results is presented in Table D-5.3. The following discussion presents summary results and conclusions from the tests.

Characteristics of the Feed

During each soil test run, a representative time-averaged feed soil sample was obtained using a grab sample technique. An approximate 100-mL grab sample was collected at the feed hopper at 30-min intervals throughout each run. The samples were composited in a specially cleaned 1-L amber glass jar with a Teflon-lined cap. Table D-5.3 summarizes the PCB concentrations in the feed soil for the Jan. and May 1987 tests.

Characteristics of the Furnace Ash

During each test run, a representative time-averaged furnace ash sample was obtained using a grab sample technique. The pilot-scale unit is equipped with an ash sampling drawer located directly above the ash discharge chute. A portion of the furnace ash that drops off the incinerator conveyor belt into the ash discharge hopper is captured in the sampling drawer. The Jan. 1987 tests showed less than 1 ppm PCB in the furnace ash for Tests 1, 2, and 6, and PCB levels of 0.003, 0.002, 0.0003, and 0.005 ppm for Tests 3, 4, 5, and 7, respectively. Furnace-ash PCB concentrations for the May Tests 1, 2, and 3 were 0.048, 0.017, and 0.038 ppm, respectively. These values are well below the 2-ppm TSCA guidance level.

Results of the furnace ash analysis from the Jan. 1987 trials indicated detectable levels of dioxins and furans. This data is shown in Table D-5.4. Samples for dioxin and furan analysis in the furnace ash were

Table D-5.2. Operational Data for the May1987 Tests

Test No	Primary Chamber Temp., °F	Residence Time Primary Chamber min	Secondary Combustor Temp., °F	Residence Time Secondary Chamber s	Solids Feedrate lb/h	PCB Level Feed ppm	PCB Feedrate lb/h
1	1,600	15	2,200	2.42	94.0	45,000	4.22
2	1,600	15	2,200	2.53	78.2	45,000	3.52
3	1,600	15	2,200	2.50	76.0	45,000	3.26
4	1,600	15	2,200	2.50	76.0	45,000	3.26

composited for the May 1987 tests and are presented in Table D-5.5.

Destruction and Removal Efficiency (DRE) of PCBs

Table D-5.6 presents the PCB DRE data for the Jan. tests. For incineration of nonliquid PCBs, the TSCA performance standard for PCBs is 0.001 g PCBs out/kg PCBs in. Tests 6 and 7 failed to comply with the emissions standard.

The DREs for all PCB-contaminated soil tests performed in January were in excess of 99.9999%, with two notable exceptions. The DRE for the Federal Cartridge Co. native soil test performed on Jan. 21, 1987, was calculated at 99.9994%. ECOVA suggests that sample contamination may be the reason for this calculation result. ECOVA believes that the actual DRE was above 99.9999%, since wastes spiked with 1,000 and 30,000 ppm PCBs on that and subsequent days resulted in DREs greater than 99.9999%. The processing of the Honeywell waste resulted in analyzed PCB DREs of 99.9998% and 99.9970% for the waste feeds containing 8,700 ppm and 418 ppm PCBs, respectively. A review of the operating conditions and history suggests no reason why this lower DRE should have occurred. A comparison with feedrates, stack flows, and sample volumes finds that these parameters were essentially the same as for all other exposures. However, a review of the laboratory data finds that the total number of nanograms of PCB caught during the 8,600 and 418 ppm PCB process operations was 12,939 and 16,208, respectively. This compares to between 80 and 623 for all the previous five sampling tests. Thus, there is not an obvious process operation explanation for the lower DRE and the explanation may be found in the sampling or analysis procedures.

For the May tests, soil feed to the unit was planned at a rate of 100 lb/h. Midway into Test 1, ECOVA personnel observed that the desired feedrate was excessive for the particular feed stream. Process conditions were difficult to stabilize. The feedrate was lowered to about 90 lb/h and operations continued. PCB flowrates and emissions are presented along with appropriate destruction and removal efficiency (DREs) in Table D-5.7. All test runs complied with the 0.001 gm PCBs out/kg PCBs TSCA standard.

The DREs for all 3 test runs were significantly greater than 99.9999%. The PCB emission rate for the first test run was somewhat higher than for the following 2 runs. This may also be attributable to the higher feedrate used during the first half of this run.

Other Organic Stack Gas Emissions

Dioxins and furans concentrations in the stack emissions for the Jan. tests are presented in Table D-5.8, and for the May tests in Table D-5.9.

PCDDs and PCDFs were not detected in the stack emission samples taken during the May tests.

Sampling for the total chlorinated organics was performed during the Jan. testing, but was omitted during the May testing. Table D-5.10 presents a summary of the RCl analysis performed on the Jan. samples. Because of the equivalent magnitude of PCB concentration for the two test periods, these results should be very indicative of what was present during the May tests. In summary, the RCl levels observed are extremely small indicating efficient destruction.

Acid Gas Removal

Tables D-5.10 and D-5.11 present the HCl concentrations in the stack gases for the Jan. and May 1987 tests. As shown, the HCl concentrations observed in the Jan. 1987 tests ranged from 0.00026 to 0.0094 lb/h and from 0.014 to 0.022 lb/h for the May tests. These concentrations are significantly below the RCRA performance standard of 4 lb/h. The HCl removal efficiency in all tests was in excess of 99%.

Particulate Emissions

Tables D-5.10 and D-5.11 present the particulate emissions data for the Jan. and May 1987 tests. In Jan. 1987, particulate emissions for four soil-process tests (the Federal-Cartridge nominal-48 and 2,070 ppm PCB, and the Honeywell nominal-8,700 and 418-ppm-PCB) were below the RCRA standard of 0.08 gr/dscf. However, for the nominal-30,000 ppm-PCB triplicate-emissions-sampling tests, the particulate emissions (corrected to 7% oxygen) were either above or close to the limit. This was due to a plugging of the wet-gas-scrubber venturi and tower-scrubbing-liquid nozzles, which greatly reduced the efficiency of the scrubbing process. The plugging originated from corrosion scale on the walls of the piping. This scale subsequently released from the walls and collected at the nozzles. Leaks in the piping, found at the conclusion of the three tests, prompted a replacement of the metal piping with Qest plastic piping prior to the Honeywell soil testing. The particulate emissions decreased after the piping change.

Table D-5.3. Demonstration Test Results Summary

Date	Test 1 1/21/87	Test 2 1/21/87	Test 3 1/22/87	Test 4 1/22/87	Test 5 1/22/87	Test 6 1/23/87
Operating parameters:						
Waste feedrate, kg/h	43.49	38.14	37.77	37.77	58.57	56.75
PCB concentration, g/kg	0.048	1.076	28	18	24	8.6
PCB feedrate, kg/h	0.002	0.041	1.058	0.680	1.406	0.491
Auxiliary fuel feedrate, kg/h	4.56	3.48	5.39	3.79	5.18	5.46
Avg. SCC residence time, s	2.04	2.14	1.73	1.82	1.89	1.85
Avg. combustion air flow, acm/min	0.40	0.40	0.40	0.40	0.40	0.40
Avg. oxygen, %	7.6	8.4	8.8	8.8	8.4	8.4
Avg. carbon dioxide, %	8.4	8.0	8.6	8.6	9.0	8.6
Avg. carbon monoxide, ppm	1	2	3	2	8	1
Combustion efficiency, %	99.9988	99.9975	99.9953	99.9977	99.9911	99.9988
Avg. scrubber water flow, gpm	10	10	10	10	10	10
Avg. scrubber water, pH	7.5	8.0	5.0	7.0	7.5	5.0
Particulate/HCl emissions:						
Stack gas flowrate, dscm/min	1.726	1.783	2.066	1.868	1.924	1.811
Particulate concentration, mg/dscm	53.33	53.22	237.85	285.12	209.51	146.25
Chlorine, g/min	0.00197	0.00198	0.0346	0.0691	0.0684	0.0054
HCl removal, %	88.74	99.42	99.64	98.98	99.51	99.89
PCB emissions:						
PCB feedrate, g/min	0.348	0.680	17.67	11.33	23.43	8.18
PCB output rate, g/min	2.0×10^{-7}	1.0×10^{-7}	7.78×10^{-7}	6.43×10^{-7}	2.55×10^{-7}	1.63×10^{-5}
PCB DRE, %	99.9994	99.999985	99.999996	99.999994	99.9999989	99.9998
PCDD/PCDF emissions:						
Total PCDD emissions, ng/dscm	0.46	NA	67.45	5.31	0.95	NA
Total PCDF emissions, ng/dscm	15.15	NA	117.60	43.00	22.20	NA

Continued)

In the May test, the particulate concentrations ranged from 0.0522 to 0.0950 gr/dscf (adjusted for 7% oxygen), as compared to the RCRA standard of 0.080 gr/dscf. When operating the pilot-scale unit at the feedrate of 100 lb/h, as planned, ECOVA operators had difficulties stabilizing the processing conditions, resulting in the high particulate emissions in Test 1. The gas flow through the scrubbing system during the first particulate test exceeded the scrubbing capacity for the particulate loading. Subsequently reducing the feedrate to 90 lb/h produced acceptable particulate emissions (i.e., 0.08 gr/dscf). The soil feedrate averaged 85 lb/h for the final 3 particulates sampling tests.

NO_x Emissions

Table D-5.10 and D-5.11 present the NO_x emissions data for the Jan. and May 1987 tests. For the May tests, NO_x emissions ranged from 0.07 to 0.09 lb/h, or with the thermal rating of the secondary combustor of 390,000 Btu/h, ranged from 0.18 to 0.23 lb/MBtu. This compares marginally with the 0.2 lb/MBtu NO_x standards for steam-generating boiler units of 250 MBtus or more, for gaseous fuels at 40 CFR 60.40, but compares favorably with standards for solid (0.50 lb/MBtu) or liquid fuels (0.40 lb/MBtu).

Table D-5.3. (Continued)

Date	Test 7 1/23/87	Test 8 5/27/87	Test 9 5/27/87	Test 10 5/27/87	Test 11 5/27/87
Operating parameters:					
Waste feedrate, kg/h	48.12	42.68	35.64	34.37	34.37
PCB concentration, g/kg	0.418	45.00	45.00	43.00	43.00
PCB feedrate, kg/h	0.020	1.92	1.60	1.48	1.48
Auxiliary fuel feedrate, kg/h	4.35	6.79	6.62	6.78	6.78
Avg. SCC residence time, s	2.12	2.42	2.53	2.50	2.50
Avg. combustion air flow, acm/min	0.40	0.40	0.40	0.40	0.40
Avg. oxygen, %	8.8	9.4	9.3	9.1	8.8
Avg. carbon dioxide, %	8.2	7.9	7.9	7.8	8.4
Avg. carbon monoxide, ppm	1	4	4	7	0.0
Combustion efficiency, %	99.9988	99.9949	99.9949	99.9910	100
Avg. scrubber water flow, gpm	10	10	10	10	10
Avg. scrubber water, pH	8.0	9.5	8.0	7.5	7.5
Particulate/HCl emissions:					
Stack gas flowrate, dscm/min	1.726	3.821	3.170	3.141	3.056
Particulate concentration, mg/dscm	121.12	268.94	153.33	154.13	169.50
Chlorine, g/min	0.0017	0.166	0.144	0.0136	0.106
HCl removal, %	99.12	99.13	99.10	99.12	99.32
PCB emissions:					
PCB feedrate, g/min	0.33	32	26.67	24.67	
PCB output rate, g/min	1.00×10^{-5}	6.48×10^{-6}	4.23×10^{-6}	3.53×10^{-6}	
PCB DRE, %	99.997	99.999980	99.999984	99.999986	
PCDD/PCDF emissions:					
Total PCDD emissions, ng/dscm	21.4	ND	ND	ND	
Total PCDF emissions, ng/dscm	1,534.0	ND	ND	ND	

ND = not detected

Table D-5.4. Dioxins and Furans in Furnace Ash - January 1987 Tests

Test No.	2,3,7,8-TCDD ppb	Total TCDDs ppb	Total PCDDs ppb
1	—	—	—
2	<0.26	<0.8	220.8
3	<0.05	<0.05	17
4	<0.05	<0.05	27
5	<1.0	<1.0	116
6	—	—	—
7	<0.06	<0.06	2.4

Test No.	2,3,7,8-TCDFs ppb	Total TCDFs ppb	Total PCDFs ppb
1	—	—	—
2	<0.0054	<0.0054	0.0034
3	<0.04	<0.04	0.5
4	<0.04	<0.04	3.4
5	<0.80	<0.80	26
6	—	—	—
7	<0.05	<0.05	<1.06

Table D-5.5. Dioxins and Furans in Furnace Ashand Scrubber Water - May 1987 Tests

Chemicals	Furnace Ash, ppb	Scrubber Water, ppt
2,3,7,8-TCDD, ng/dscm	0.02	0.00046
Total TCDDs	0.02	0.00046
Total PCDDs	ND	ND
2,3,7,8-TCDF, ng/dscm	0.02	0.00050
Total TCDFs	0.02	0.00050
Total PCDFs	ND	ND

ND Not detected

Combustion Efficiency

In accordance with TSCA performance standards, the combustion efficiency for each of the 3 test runs of May 1987 was calculated using the contractor CEM values for CO and CO2. The calculated values

Table D-5.6. PCB DRE For the January 1987 Tests

Test No.	PCB DRE %	PCB DRE g PCB Out/ kg PCB In	PCB Mass Rate In mg/h	PCB Mass Rate Out mg/h
1	99.9994	0.000575	20.88×10^3	0.012
2	99.999985	0.000147	40.8×10^3	0.060
3	99.999996	0.000043	$1,060.2 \times 10^3$	0.046
4	99.999994	0.00005	679.8×10^3	0.038
5	99.9999989	0.000011	$1,405.8 \times 10^3$	0.015
6	99.9998	0.001993	490.8×10^3	0.978
7	99.997	0.0303	19.8×10^3	0.600

Table D-5.7. PCB DRE For the May 1987 Tests

Test No.	PCB DRE %	PCB DRE g PCB Out/ kg PCB In	PCB Mass Rate In mg/h	PCB Mass Rate Out mg/h
1	99.999980	0.000203	1,920 x 106	0.389
2	99.999984	0.000159	1,600 x 106	0.254
3	99.999986	0.000143	1,480 x 106	0.212

Table D-5.8. Dioxins and Furans in Tack Emissions - January 1987 Tests

Test No.	2,3,7,8-TCDD	Total TCDDs	Total PCDDs
1	<0.11	<0.52	<1.34
2	—	—	—
3	<0.056	0.95	68.09
4	<0.0129	0.65	5.40
5	<0.011	0.48	0.95
6	—	—	—
7	<0.53	10.56	20.9

Test No.	2,3,7,8-TCDFs	Total TCDFs	Total PCDFs
1	1.34	6.88	15.1
2	—	—	—
3	3.6	15.6	114.3
4	1.8	8.80	41.3
5	1.4	6.04	20.8
6	—	—	—
7	113	609	1,420

Values in ng/dscm

were significantly higher than the TSCA performance standard of 99.9%.

Scrubber Water

PCB levels in the scrubber water for the Jan. and May tests are presented in Table D-5.12.

Analyses of the dioxins and furans in the scrubber water for the Jan. tests are presented in Table D-5.13. May tests used composite samples of scrubber water for dioxins and furans analysis. Results are given in Table D-5.5.

Table D-5.9. Dioxins and Furans in Stack Emissions - May 1987 Tests

Chemicals	Test 1	Test 2	Test 3
2,3,7,8-TCDD	0.33	0.11	0.19
Total TCDDs	0.33	0.11	0.19
Total PCDDs	ND	ND	ND
2,3,7,8-TCDF	0.57	0.61	0.77
Total TCDFs	0.57	0.61	0.77
Total PCDFs	ND	ND	ND

Values in ng/dscm
ND = Not detected

Table D-5.10.Stack Emissions - January Tests

Test No.	Particulates gr/dscf	HCl lb/h	NO_x ppm	RCl mg/m³
1	0.0233	0.00026	103	46.79
2	0.0232	0.00027	100	46.57
3	0.1039	0.0047	99	45.50
4	0.1246	0.0094	92	31.17
5	0.0915	0.0093	96	37.38
6	0.0639	0.0074	109	38.28
7	0.0529	0.0022	133	37.39

Table D-5.11.Stack Emissions - May Tests

Test No.	Particulates gr/dscf	HCl lb/h	NO_x ppm
1	0.0950	0.022	102
2	0.0528	0.019	98
3	0.0522	0.018	98
4	0.0559	0.014	—

Table D-5.12.Scrubber Water PCB Levels

Jan. Tests Test No.	Jan. Tests Scrubber water PCB level, ppb	May Tests Test No.	May Tests Scrubber water PCB level, ppb
1	—	1	9.7
2	<15	2	1.6
3	5.37*	3	9.9
4	5.37*	4	—
5	5.37*		
6	<100		
7	0.148		

The scrubber water samples for Tests 3, 4, and 5 were composited and analyzed, giving one result.

Operations

Since the Twin Cities tests were performed using the nominal 80 to 100 lb/h pilot-scale unit, operational

experiences are not scalable to the large commercial units. Two problems that were encountered are discussed below.

Table D-5.13. Dioxins and Furans in Scrubber Water - January 1987 Tests

Test No.	2,3,7,8-TCDD	Total TCDDs	Total PCDDs
1	—	—	—
2	<0.0054	<0.0054	<0.0034
3	<0.0038*	<0.0038*	<0.0282*
4	<0.0038*	<0.0038*	<0.0282*8.09
5	<0.0038*	<0.0038*	<0.0282*
6	—	—	—
7	<0.0089	<0.0089	0.021

Test No.	2,3,7,8-TCDFs	Total TCDFs	Total PCDFs
1	—	—	—
2	<0.0043	<0.0043	<0.0025
3	<0.003*	<0.003*	45*
4	<0.003*	<0.003*	45*
5	<0.003*	<0.003*	45*
6	—	—	—
7	<0.0071	<0.0071	<0.0071

*Scrubber water samples for Tests 3, 4, and 5 were composited and analyzed,giving one result.

Values in ppb

Feed rates greater than 100 lb/h apparently caused instability in the test operations. The high feedrate resulted in an increase in the flue gas velocity because a greater quantity of fuel and combustion air is required to destroy the PCBs, producing a higher volume of combustion gases. Data revealed high stack-gas velocity as a potential indicator of process instability. This also resulted in high particulate emissions since the capacity of the scrubber system was exceeded.

In the Jan. testing, excess particulate emissions were caused by plugging of the wet-gas-scrubber venturi and tower-scrubbing-liquid nozzles, which greatly reduced the efficiency of the scrubbing process. The plugging originated from corrosion scale on the walls of the piping. This scale subsequently released from the walls and collected at the nozzles. Leaks in the piping, found at the conclusion of the 3 tests, prompted a replacement of the metal piping with plastic piping prior to the further soil testing. The particulate emissions decreased after the piping change.

APPENDIX D-6

BRIO PILOT-SCALE TESTS [14]

The Shirco pilot-scale unit, contracted by the Brio task force, was in operation at the Brio refinery site in Houston, TX. between Feb. 9 and 14, 1987. The objectives of these thermal treatment tests on excavated pit material were as follows:

- To determine the incinerator-ash chemical composition.
- To demonstrate that the incinerator feed system can reliably provide a continuous, blended feed to the incinerator and deposit this feed material in a uniform manner on the incinerator belt.
- To demonstrate that the incinerator can meet the RCRA performance standard of 99.99% destruction and removal efficiency for POHCs.
- To provide design information and economic data required to evaluate the feasibility of incinerating certain Brio-Site pit wastes.

The actual series of test burns was performed from Feb. 10 through 13, 1987. Shirco Infrared Systems, Inc. personnel operated the unit and prepared the test matrix.

Feed Preparation

The feed for the test was evacuated from the Brio on-site pits using a backhoe. Materials from four different pits were obtained and packed in 55-gal drums. System operators and feed preparation personnel reported that overall the consistency of the feed was a tacky soil that had a clay content. The feed also contained large pieces of tar chunks. To produce the required feed size of less than 1/2 in., manual screening and delumping was necessary. Large pieces of tar chunks shattered when struck. Some material that was more clay-like and contained tarry chunks required a great deal of effort to prepare through a 1/2-in. screen. The clay had to be pressed through the screen and the tarry chunks had to be broken by impact and passed through the screen. Although lime was not needed for acid neutralization, a small percentage of lime or other materials like fly ash would be useful to reduce the tacky nature of the feed.

To demonstrate that the process can meet RCRA performance standards for DRE of POHCs, it was necessary to spike the feed material with carbon tetrachloride, CCl_4. The method employed to accomplish spiking involved placing a preweighed amount of feed, about 50 lb, in a cement box and adding to the feed a predetermined amount of carbon tetrachloride CCl_4, diluted with hexane. The feed then was quickly mixed using a garden hoe, immediately shoveled into plastic 5-gal buckets, and sealed.

The feed material was screened through a 1/2-in.-mesh screen before introduction into the feed hopper.

Test Procedure

A total of 8 test runs were conducted, which represented feed material from 4 different pits (J, I, M, and B) with each material tested at residence times of 12 and 18 min in the primary combustion chamber. A knife gate near the entrance region of the conveyor belt was used to control the size of the material entering the furnace and to set the height of the feed material on the belt, which in turn controls the feedrate. The beginning of each run was started by feeding unspiked material until the system was stabilized. The startup of the actual test began when the feed of spiked material began. The test ended when the last of the spiked feed was discharged off the belt in the furnace.

The PCC of the unit consists of two zones (A and B), which can be individually controlled for temperature. Throughout the test program, the PCC temperature was controlled through combustion air addition and auxiliary electric power to between 1,550° and 1,600°F in Zone A and a nominal 1,600°F in Zone B. The primary combustion chamber exhaust temperature was maintained between 1,600° and 1,700°F for the Pits J and I materials. However, for

the Pits M and B materials, the PCC exhaust and the Zone A temperatures were decreased. This is the result of a higher combustible content in the Pits J and I waste as compared to the lower Btu content of the Pit M and B material. The scrubber stack temperature was maintained at a level between 175° and 181°F throughout the tests. The secondary combustion chamber was maintained between 2,150° and 2,200°F during all testing. Table D-6.1 presents the process conditions for each of the 8 tests conducted at the Brio site.

For each test burn, a complete analysis was conducted on the feed, ash, scrubber makeup water (before test run), scrubber water (after test run), scrubber inlet gas, and scrubber exhaust gas (stack) samples.

Results

Characteristics of the Feed

As described earlier, material from Pit J (excluding rocks) would break apart easily. The waste material from Pits B, I, and M was much more clay-like and included some tarry chunks.

All test material was spiked with carbon tetrachloride (CCl_4) to determine the destruction capability of the thermal treatment. CCl_4 is the fourth hardest compound on the difficult-to-destroy-by-thermal-treatment scale, based on a hierarchy established by the EPA. It has a higher rating than any other compound found on the Brio site. CCl4 was injected into the soil and was mixed for several minutes to homogenize it.

In addition to CCl_4, the feed material contained several different contaminants. Table D-6.2 provides ranges of some of the typical contaminants found in the feed material from the four pits.

Characteristics of the Furnace Ash

The analysis of the furnace ash for all test runs indicated the destruction of all potential problem compounds to levels below the level of concern and often below the minimum level of detection. Also, analysis was done for chlorinated pesticides/PCBs, organophosphorous pesticides, phenoxy herbicides, metals, cyanide, sulfide, fluoride, dioxins, and furans. None of these chemical pollutants were detected. The EP Tox test for leachable metals showed all metals to be below the toxicity characteristic standards. Sulfides combined in the furnace ash ranged from 170 to 9350 ppm.The principal contaminant, CCl_4, which ranged from 4 to 128 mg/kg in the feed material, was analyzed at less than 0.005 mg/kg in the furnace ash for all tests.

Table D-6.3 presents the weights and volumes of feed material during the test program. From this data, weight and volume reduction percentages were calculated. These two percentages were defined as the percentage of the initial value removed. The table shows that a nominal weight reduction ranging from 38% to 51% was accomplished for each test. Pits I and J had weight reduction ranging from 38% to 45%, while both Pits M and B resulted in 51% reductions. The volume reductions were similar in all tests. All 12-min PCC residence-time-cases resulted in a nominal 55% volume reduction, whereas the 18-min cases were 45%. This suggests some increase in ash particle size with extended thermal exposure. In summary, these tests indicate that mass and volume may both be reduced by approximately 50% through thermal processing.

Table D-6.1. Brio Site Process Conditions

Test No./Pit	CCL4 Spike mL	Res. Time min	Feed-Rate lb/h	Temp. Zone A °F	Temp. Zone B °F	Temp. SCC °F	Primary Exhaust °F	Power kWh	Fuel lb/h	Knife Gate in.
1/J	30	12	71.9	1,596	1,612	2,159	1,727	15.3	10.9	1 1/8
2/J	30	18	58.2	1,596	1,613	2,224	1,611	16.5	11.7	1 1/4
3/I	30	18	50.2	1,601	1,608	2,204	1,601	13.8	9.7	1 3/8
4/I	30	18	67.3	1,600	1,586	2,200	1,601	16.8	8.9	1 1/8
5/M	30	12	43.2	1,510	1,599	2,235	1,189	21.9	9.7	1 1/8
6/M	30	18	33.0	1,565	1,612	2,209	1,258	19.6	8.3	1 1/8
7/B	30	18	41.7	1,540	1,612	2,195	1,234	23.0	10.3	1 1/4
8/B	30	12	42.3	1,531	1,612	2,216	1,232	21.6	9.5	1 1/4

Table D-6.2 Typical Contaminants in Brio Site Feed Material

Compund	Concentration, mg/kg
Acetone	<1 to 120
Anthracene	< 20 to 32
Benzene	<0.50 to 3.6
Carbon disulfide	< 0.50 to 5.7
Carbon tetrachloride*	4 to 128
Chlorobenzene	< 0.50 to 31
Chloroform	< 0.50 to 43
1,2-Dichloroethane	8.3 to 106
1,1-Dichloroethane	< 0.50 to 31
1,1-Dichloroethylene	< 0.50 to 16
Ethyl benzene	7.4 to 160
Napthalene	< 20 to 140
Nitrosodiphenylamine	< 20 to 100
Phenanthrene	< 20 to 416
Styrene	< 0.50 to 140
1,1,2,2-Tetrachloroethane	< 0.50 to 39
Tetrachloroethylene	< 0.50 to 28
Tetrachloromethane	4 to 128
Toluene	0.89 to 17
1,2 trans-Dichloroethylene	< 0.50 to 2.6
1,1,1-Trichloroethane	< 0.50 to 1.5
1,1,2-Trichloroethane	< 0.50 to 132
Trichloroethylene	< 0.50 to 33
Vinyl chloride	<1.0 to 3.0

*Spiking chemical

Scrubber Inlet/Stack Gas Data

Particulate Emissions--
Table D-6.4 summarizes the exhaust-stack particulate loadings for each run. The levels are all below the 0.08 gr/dscf RCRA performance requirement.

Continuous Emissions Monitoring--
Also summarized in Table D-6.4 are the emissions of SO_3, SO_2, CO, and NO_x as measured by the continuous monitoring equipment at the scrubber inlet.

Destruction and Removal Efficiency (DRE) of CCl_4--
Using the stack gas flowrate and the volume of gas sample caught in the MM5 sampling train, the maximum amount of CCl_4 that could have passed through the stack was calculated. All these values were transformed into hourly flowrates using the total test time. Table D-6.5 presents these calculations in a tabular form, along with the resulting destruction and removal efficiency, DRE.

The results presented in Table D-6.5 show that the DRE of CCl_4 was at minimum, greater than 99.9997% for the 8 tests performed.

The DRE results were based on the total amount of CCl_4 added to the feed. The reason for this approach, as opposed to a DRE based on feed sample analysis, is that when adding a liquid chemical into a material with a high clay content (such as the test material), one cannot achieve a homogeneous mixture capable of supporting testable grab samples. For example, in a grab- feed sampling testing program, the composite feed sample could potentially contain a small or large concentration of the trace compound producing data for DRE purposes that would not be comparable.

Other Organic Contaminants—
Analyses of the scrubber inlet and the stack gases for polychlorinated dibenzo-p-dioxins and dibenzo furans did not detect these compounds at levels greater than the detection limit of <0.75 µg/mL of concentrated extract.

In the analysis of the charcoal tubes in the MM5 train for volatile organics, a quantity of methyl chloride was detected. This was the solvent used to clean the train prior to the test. The only other compounds found were toluene, methyl bromide, tetrachloroethane, chloroform, and trichloroethylene — all at levels less than established standards for direct inhalation.

Table D-6.3. Weight and Volume Reduction of Waste Feed Materials

Primary Chamber Residence Time min	Run	Initial Weight lb	Ash Weight lb	Weight Reduction %	Initial Volume ft^3	Ash Volume ft^3	Volume Reduction %
12	J-1	260.5	160	38.6	5.788	2.588	55.3
18	J-2	162	101	37.7	3.6	1.956	45.66
18	I-1	138	78	43.5	2.97	1.6	45.86
12	I-2	113	62	45.1	3.63	1.6	55.67
12/18	M-1,2	302	147.5	51.2	7.02	2.99	57.42
18	B-1	100	77	23.0	2.22	1.15	48.25
12	B-2	155	75	51.6	3.44	1.61	53.19

Table D-6.4. Brio Site Stack Gas Analyses

Analysis	Test Number 1	2	3	4	5	6	7	8
Particulate(a) gr/dscf	0.015	0.022	0.027	0.034	0.007	0.006	0.018	0.016
SO_3, lb/h	0.12	0.29	0.10	0.076	0.014	0.005	0.013	0.010
SO_2, lb/h	0.34	0.20	0.11	0.055	0.077	0.001	0.004	0.001
CO, ppm	0.0	0.0	0.0	0.0	0.0	0.0	0.0	0.0
NO_x, lb/h	0.022	0.02	0.025	0.026	0.027	0.025	0.030	0.022
HCl, mg/L	<0.0678	<1.095	<1.380	<1.323	<1.034	<0.619	<1.031	<0.953
DRE, %	>99.9998	>99.9997	>99.9998	>99.9997	>99.9997	>99.9997	>99.9997	>99.9997

(a)Corrected to 7% O_2

Scrubber Effluent/Makeup Water

Scrubber water was analyzed for priority pollutants, cyanide, total organic carbon, and chlorides. The organic portion of the priority pollutants were all lower than the detection limit, with the exceptions of methyl bromide (0.01 mg/L) di-n-butyl phthalate (0.39 mg/L), methylene chloride (0.012 mg/L), methyl chloride (0.010 mg/L), 2-ethylhexyl phthalate (0.04 mg/L), and phenol (0.13 mg/L). The high chloride levels are due to the high concentration of chlorinated hydrocarbons in the feed. Chloride exists as sodium chloride in the scrubber water. Carbon tetrachloride levels in both the makeup and the scrubber were all <5.0 µg/L indicating virtually no carbon tetrachloride in the water.

The metal and organic concentrations in both the plant-supplied makeup water and the scrubber effluent were essentially the same in each case. Thus, it was concluded that there was not significant addition of metals to the scrubbing liquid during thermal processing.

Full Scale System Economic Analysis

An economic analysis was performed to determine treatment costs for the Brio site if a commercial-scale unit were used. Using a site size of 125,000 tons and Pit J waste data, 2 commercial-size units were considered. A nominal 150 ton/d unit will use a 9 x 61 ft primary chamber. The waste-treatment cost data for the 150-ton/d system is shown in Table D-6.6, which shows a minimum treatment cost of $143/ton. Similarly, the cost for a 9 x 85-ft primary chamber unit designed to treat 220 ton/d is estimated at $119/ton. These costs do not include costs for feed excavation, feed preparation, ash disposal, interest, and taxes. The estimates are accurate to +25%.
Both units were assumed to operate 50 wk/yr, 6 d/wk giving a utilization factor of 82.42% (300 d/yr).

Table D-6.6. Onsite Mobile Incineration Service Estimated Economic Model

Equipment:	1 Shirco mobile system
Capacity:	150 ton/d
Yearly throughput:	45,000 tons, (assuming 50 wk/yr, 6 d/wk operation)
Direct operating costs:	$ 76.03/ton
Equipment cost:	29.86/ton
Profit, taxes, and opportunity cost:	37.06/ton
Total minimum cost	$142.95/ton

Operation

The Shirco unit used at the Brio site was a pilot-scale unit with minimal operational problems. The main problems related to the feed system. Since a pretest feed-preparation study was not performed, the equipment available for screening, delumping, and mixing was not adequate for the task. It was found that, in order to produce a desired feed size, manual screening and delumping was necessary. A hardwire screen was needed to breakup the lumps and remove larger rocks.

It is concluded that all materials at the site will require delumping and screening prior to incineration. For the wastes in 3 pits, mixing with lime, kiln dust, fly ash, or dry soil is recommended to minimize the sticky nature and simplify materials handling. To facilitate system design a materials preparation test is recommended.

Table D-6.5. Destruction and Removal Efficiency of CCl4

Test Pit	1 J	2 J	3 I	4 I	5 M	6 M	7 B	8 B
Stack flow, DSCFH DSCF	5,163 9,035	5,542 10,899	6,063 10,913	5,164 6,283	4,426 8,778	4,883 15,056	4,710 9,028	4,872 10,150
Sample volume, DSCF DSCFH	65.035 37.1628	59.121 30.0615	54.924 30.5133	33.488 27.5243	44.259 22.3154	72.527 23.5222	43.208 22.5433	49.154 23.5939
Sampling date	2/10/87	2/11/87	2/11/87	2/11/87	2/12/87	2/12/87	2/13/87	2/13/87
Sampling interval, time min	15:37-17:22 105	10:02-12:00 118	14:16-16:04 108	18:45-19:58 73	10:50-12:49 119	15:02-18:07 185	10:21-12:16 115	13:43-15:48 125
Total waste fed, lb	150	105	63	63	75	75	60	75
Total CCl_4 in feed, g	48	48	48	48	48	48	48	48
Total CCl4 in sample, g	$<7.108\times10^{-7}$	$<7.131\times10^{-7}$	$<7.282\times10^{-7}$	$<7.2327\times10^{-7}$	$<7.263\times10^{-7}$	$<7.166\times10^{-7}$	$<7.44\times10^{-7}$	$<7.383\times10^{-7}$
Total CCl4 in stack, g	$<9.875\times10^{-5}$	$<1.315\times10^{-4}$	$<1.4469\times10^{-4}$	$<1.357\times10^{-4}$	$<1.440\times10^{-4}$	$<1.4877\times10^{-4}$	$<1.55\times10^{-4}$	$<1.525\times10^{-4}$
CCl_4 emission rate, g/h	$<5.643\times10^{-5}$	$<6.684\times10^{-5}$	$<8.038\times10^{-5}$	$<1.115\times10^{-4}$	$<7.263\times10^{-5}$	$<4.825\times10^{-5}$	$<8.111\times10^{-5}$	$<7.318\times10^{-5}$
CCl_4 feed rate, g/h	27.4286	24.4067	26.667	39.452	24.2017	15.5675	25.0434	23.0400
DRE, %	>99.9998	>99.9997	>99.9998	>99.9997	>99.9997	>99.9997	>99.9997	>99.9997

$$DRE = \frac{(CCl_4 \text{ feedrate} - CCl_4 \text{ emission rate}) \times 100\%}{CCl_4 \text{ feedrate}}$$

Legend: DSCFH - Dry standard cubic feed per hour
DSFC - Dry standard cubic feed

APPENDIX D-7

TIBBETTS ROAD PILOT-SCALE TESTS [15]

Introduction

The Environmental Protection Agency (EPA) contracted the O.H. Materials Corp. in Sept. 1986 to use a small-scale mobile hazardous-waste incinerator to detoxify contaminated soil at the Tibbetts Road Hazardous Waste Site in Barrington, NH. The soil was contaminated with dioxin, polychlorinated biphenyls (PCBs), herbicide, and solvents. Subsequently, Shirco Infrared Systems, Inc. was contracted by O.H. Materials to perform the detoxification in its pilot-scale unit. The objectives of the program were as follows:

- To decontaminate approximately 5 yd^3 of excavated soil, including a percentage of rocks, wood, and plastic. The soil contained volatile and semivolatile organic pollutants, including polychlorinated biphenyls (PCBs) and dioxins and furans.
- To determine the furnace-ash chemical composition.
- To demonstrate that the unit can meet the RCRA and TSCA performance standards for the Destruction and Removal Efficiency (DRE) of the designated priority pollutants.

Field incineration activities at the site were conducted on a 24 h/d basis for the period from Nov. 6 through 14, 1986. Continuous measurements of selected stack-gas parameters were conducted during this entire period to ensure the efficient operation of the incinerator. In addition, 3 discrete test runs were conducted to document the DRE and process stream concentrations of selected hazardous organic species of interest.

Feed Preparation

The feed to be processed was excavated from the Tibbetts Road site prior to the test and stored in a waste dumpster, which was sealed until the test date. Prior to use as feed for the Shirco unit, the waste material was screened through a 1-in. hardware cloth to remove large rocks, sticks, and pieces of plastic. After screening, the material was placed into plastic 5-gal buckets and sealed. The buckets were weighed and placed by the feed hopper for feeding.

The contaminated soil was fed to the unit by a feed operator. The 5-gal bucket was transported to the top of the primary-chamber feed module and manually fed to the feed hopper in 5-lb increments. As needed, the material would be spread and more material added such that the feedrate remained constant. The rate of soil feed to the furnace was set by adjusting the feed hopper gate opening to 1 in. and the belt speed to a 20-min residence time. Feeding continued in this manner throughout the project test period.

Test Procedure

Operating parameters for the unit while incinerating Tibbetts Road waste (including the three emission test runs) are given in Table D-7.1.

For the demonstration test at the Tibbetts Road site, PCC Zones A and B were controlled at a set point temperature of 1600°F. The PCC temperature was controlled between 1,500° and 1,600°F combustion air and auxiliary electric power. The SCC temperature was maintained between 2,200° and 2,350°F.

A comprehensive sampling and analytical program was conducted. The goals of this sampling and analytical program were to:

- Determine the DRE of the principal organic hazardous constituent (POHC), PCBs, as defined by Region I;
- Characterize each of the 4 process streams for selected hazardous constituents, including PCBs and chlorinated dioxins/furans; and

Table D-7.1.Operation Summary

Date	Time Period,h	Emissions Test No.	Primary Chamber Residence Time, min	Primary Chamber Temp., °F	Feed-Rate,lb/h	Secondary chamber Temp., °F	Secondary chamber Residence Time, s
11/05/86	13:23-16:20		20	1,600	25.42	2,300	
11/06/86	02:40-09:40		20	1,600	51.21	2,300	
11/06/86	09:40-13:50	1	19.5	1,600	48.19	2,350	
11/06/86	13:50-24:00		20	1,600	42.93	2,350	
11/07/86	00:00-10:16			1,600	37.00	2,350	
11/07/86	10:16-13:31	2	20	1,600	61.92	2,350	2.24
11/07/86	13:31-24:00		20	1,600	47.62	2,350	2.13
11/08/86	00:00-24:00		20	1,600	34.53	2,380	2.08
11/09/86	00:00-07:40		20	1,600	46.65	2,375	
11/09/86	07:40-09:30		25	1,600	53.57	2,380	
11/09/86	09:30-13:51	3	25	1,600	45.16	2,375	2.01
11/11/86	15:50-24:00		30	1,600	34.02	2,350	
11/12/86	00:00-06:00		30	1,600	25.71	2,350	
11/12/86	17:25-24:00		20	1,600	59.67	2,400	
11/13/86	00:00-10:00		20	1,600	59.67	2,350	
11/13/86	11:08-24:00		20	1,600	80.76	2,350	
11/14/86	00:00-16:30		20	1,600	21.16	2,325	

- Monitor the combustion efficiency of the system throughout the entire test period to ensure operations appropriate for the destruction of the designated organic species of interest.

During the entire time the incineration system was in operation, the monitoring for gases such as carbon monoxide (CO), carbon dioxide (CO_2), oxygen (O_2), and oxides of nitrogen (NO_x) was performed.

Samples of the waste feed, furnace ash and scrubber water were taken during each of the 3 stack-emissions sampling periods. These samples were later analyzed in the laboratory for organics and chlorides. Stack gas sampling over three 4-h periods was performed, and analyses for organics, particulates, HCl, and RCl were conducted.

Results

The following discussion presents the results of the analysis of the waste feed, furnace ash and scrubber water during the 3 emissions sampling tests for PCBs, PCDDs, and PCDFs. Also reported are the results of the stack gas analysis for PCBs, PCDDs, PCDFs, particulates, HCl, RCl, and fixed gases (CO, CO_2, O_2, NO_x). Based upon the feed and stack gas concentrations of the defined priority pollutants, the destruction and removal efficiencies are also presented.

Characteristics of the Feed

Results from the PCB analyses of the waste feed are summarized in TableD-7.2. As indicated in the table, the contaminated material originally contained an average of 700 ppm of total PCB. The distribution of the congeners and the predominance of the hexachloro- and heptachloro-biphenyls in the waste suggested high-boiling Aroclors, such as 1260.

Table D-7.2. PCB Concentrations in Waste Feed, ppm

Isomer Group	Test 1	Test 2	Test 3
Cl_1 - PCB	NDa	NDa	NDa
Cl_2 - PCB	NDa	NDa	NDa
Cl_3 - PCB	NDa	NDa	NDa
Cl_4 - PCB	2.4	2.3	31.
Cl_5 - PCB	61	74	86
Cl_6 - PCB	280	310	430
Cl_7 - PCB	190	210	300
Cl_8 - PCB	40	45	59
Cl_9 - PCB	2.8	2.5	3.8
Cl_{10} - PCB	NDa	NDa	NDa

NDa = 3.6 ppm

Results of dioxin and furan analyses on the waste feed are summarized in Table D-7.3, and indicate the presence of chlorinated furan and tetrachlorodibenzo-p-dioxin species in all samples. Concentrations of the chlorinated furans ranged from 333 ppt to 2.0 ppb. The concentrations of total

Table D-7.3. PCDD/PCDF Concentrations in Waste Feed, ppb

Isomer Group		Test 1	Test 2	Test 3
PCDF	Tetra	0.081	0.081	0.033
	Penta	0.19	0.48	<0.20
	Hexa	0.69	0.97	0.38
	Hepta	1.3	1.6	0.71
	Octa	1.6	2.0	0.91
PCDD	Tetra	0.88	3.8	1.2
	Penta	<0.015	<1.2	<0.84
	Hexa	<0.019	<0.11	<0.094
	Hepta	<0.15	<0.15	0.15
	Octa	<0.20	<0.20	0.20

TCDD ranged from 0.88 to 3.8 ppb. Additional analyses specific for the determination of 2,3,7,8-TCDD were not conducted as part of this project. Previous data collected by EPA Region I confirmed the fact that this isomer was not present in the soils at the site.

The "worst case" TCDD equivalents for the waste feed samples ranged from 0.92-4.04 ppb.

Characteristics of the Furnace Ash

PCB and PCDD/PCDF analysis results of the furnace ash are given in TablesD-7.4 and D-7.5. The total PCB concentrations in the furnace ash samples from each run ranged from 5.7 to 16.4 ppb. PCDD/PCDF analyses of the furnace ash samples indicate that no detectable levels of these species were present. The TCDD equivalents for these samples averaged 0.006 ppb.

Table D-7.4. Concentrations of PCBs in Furnace Ash, ppb

Isomer Group	Test 1	Test 2	Test 3
Cl_4 - PCB	NDb	NDb	NDb
Cl_5 - PCB	NDb	1.2	1.5
Cl_6 - PCB	3.6	8.3	9.3
Cl_7 - PCB	2.1	4.6	5.6
Cl_8 - PCB	NDb	NDb	NDb
Cl_9 - PCB	NDb	NDb	NDb

NDb = 13 ppb

Table D-7.5. Concentrations of PCDD/PCDF in Furnace Ash, ppb

Isomer Group		Test 1	Test 2	Test 3
PCDF	Tetra	<0.0011	<0.0012	<0.0018
	Penta	<0.011	<0.012	<0.011
	Hexa	<0.0039	<0.0039	<0.0043
	Hepta	<0.0032	<0.0085	<0.022
	Octa	<0.0085	<0.0075	<0.0075
PCDD	Tetra	<0.0041	<0.0022	<0.0033
	Penta	<0.0059	<0.0053	<0.0096
	Hexa	<0.0023	<0.0031	<0.0095
	Hepta	<0.10	<0.0044	<0.10
	Octa	<0.20	<0.10	<0.50

Destruction and Removal Efficiency (DRE)

Concentrations of PCBs and PCDF/PCDDs in the stack gas are presented in Tables D-7.6 and D-7.7. The calculated destruction and removal efficiencies for total PCBs as well as individual isomer groups are presented in Table D-7.8. In those instances where there were no detectable levels of PCBs in the stack gas samples, the DREs were calculated using the associated analytical detection limits. The concentrations of PCBs detected in the stack gas samples from Test 2 resulted in a DRE of 99.99981%. DREs calculated for the individual isomer groups detected in the stack gas sample ranged from >99.99% to 99.99981%.

Table D-7.6. Concentrations of PCBs in Stack Gas, ng/m³

Isomer Group	Test 1	Test 2	Test 3
Cl_4 - PCB	—	NDd	NDe
Cl_5 - PCB	—	27.8	NDe
Cl_6 - PCB	—	122.4	NDe
Cl_7 - PCB	—	74.5	NDf
Cl_8 - PCB	—	NDg	NDf
Cl_9 - PCB	—	NDh	NDh

NDd 40 ng/m³ NDg 30 ng/m³
NDe 20 ng/m³ NDh 45 ng/m3
NDf 25 ng/m3

The analytical detection limits were sufficient to demonstrate DREs in excess of 99.9999% for Test 3. The "greater than" values for these calculations, which do not meet the requirement of 99.9999%, are the result of PCB feed concentrations less than 100 ppm.

Table D-7.7. Concentrations of PCDD/PCDF in Stack Gas, ng/m³

Isomer Group		Test 1	Test 2	Test 3
PCDF	Tetra	—	0.111	<0.115
	Penta	—	<0.097	<0.287
	Hexa	—	<0.062	<0.089
	Hepta	—	<0.122	<0.289
	Octa	—	<0.478	<1.09
PCDD	Tetra	—	<0.032	<0.045
	Penta	—	<0.133	<0.112
	Hexa	—	<0.107	<0.097
	Hepta	—	<0.178	<0.420
	Octa	—	<0.367	<1.06

Table D-7.8. Destruction and Removal Efficiencies of PCBs and PCDDs/PCDFs, %

Isomer Group		Test 1	Test 2	Test 3
PCB	Cl_4	—	>99.9909	>99.996
	Cl_5	—	99.99979	>99.99988
	Cl_6	—	9.99979	>99.99997
	Cl_7	—	99.99981	>99.99994
	Cl_8	—	>99.99967	>99.999975
	Cl_9	—	>99.99904	>99.991
Total PCBs		—	99.99981	>99.99992
PCDF	Tetra	—	99.26441	>98.33534
	Penta	—	>99.89201	—
	Hexa	—	>99.96560	>99.88724
	Hepta	—	>99.5904	>99.79883
	Octa	—	>99.87190	>99.42652
PCDD	Tetra	—	>99.99545	>99.98215
	Penta	—	—	—
	Hexa	—	—	—
	Hepta	—	—	—
	Octa	—	—	—

A general review of the incinerator operating conditions was conducted in an attempt to resolve the variation in DREs for Tests 2 and 3. Since the SCC temperature was in excess of 2,200°F during both of these runs, the review was centered around the gas residence time and turbulence in the chamber. The calculated gas residence-time for both of the test runs was determined to be in excess of the 2-s period required by TSCA. The degree of turbulence, or mixing, in the secondary chamber was evaluated by the calculation of a Reynolds Number for the combustion gases. Turbulent flow exists at Reynolds Numbers in excess of 2,300. Below this number, laminar or transition flow prevails and mixing occurs only by diffusion. The Reynolds Number for Test 2 was calculated to be 2,200, indicating transition flow, which may be responsible for the DREs below the 99.9999% level. Values calculated for Test 3, during which the incinerator did achieve the required DRE, are in excess of 2,400.

Valid data from Test 1 were not available due to a non-quantitative transfer of the sample extract during the final concentration step in the laboratory.

As indicated in Table D-7.7, detectable levels of TCDF were present in the sample extract from Test 2 at a level of 0.111 ng/m3. The level of TCDF in the stack gas corresponds to a DRE of 99.26%. The remaining DRE values were calculated using the analytical detection limits for each isomer group. These detection limits were not appropriate for the determination of the required level of destruction due to the low levels of these constituents in the waste feed.

The calculated DRE for TCDF is not consistent with the level of destruction demonstrated for PCBs. A comparison of the heats of combustion, the general measure of incinerability currently used by the EPA, for TCDF and PCBs indicates that these compounds should behave similarly under identical process conditions. The fact that the calculated DREs for these two constituents are so profoundly different suggests that the TCDF in the stack gas may be a product of incomplete combustion (PIC) related to the low turbulence condition that was present in Test 2. This can be remedied by simple modifications to the design of the SCC to produce a more turbulent atmosphere for the complete oxidation of organic material.

Other Stack Emissions

Additional analyses, including: fixed gases; total particulate; hydrochloric acid; oxides of nitrogen and total chlorinated organics, were also conducted on the stack gas stream. The averaged results of these analyses are presented in Table D-7.9.

The calculated combustion efficiencies for all the test runs were determined to be greater than 99.9%. The associated concentrations of carbon monoxide in the flue gas stream ranged from 2.1 ppm to a high of 8.0 ppm.

The particulate concentration values reported in Table D-7.9 have been corrected to 7% O2. Particulate emissions ranged from 0.040 to 0.050 gr/dscf and are in compliance with the RCRA performance standard of 0.08 gr/dscf.

Table D-7.9. tack Gas Composition

Parameter	Test 1	Test 2	Test 3
Particulate emissions gr/dscf @ 7% O2	0.044	0.040	0.050
HCL emissions, lb/h	0.002	0.003	0.015
RCL emissions, mg/m3	2.0	< 5.2	< 2.8
Fixed gas composition	—	—	—
Oxygen, %	8.4	8.7	10.3
Carbon dioxide, %	8.4	8.3	8.0
Nitrogen oxides, ppm	163.1	175.2	209.8
Average carbon monoxide, ppm	4.2	4.2	3.0
Combustion efficiency, %	99.99	99.99	99.999

Hydrochloric acid (HCL) emissions from the system were determined to be less than 4 lb/h, and in compliance with the RCRA performance standards for hazardous waste incinerators.

The average stack gas concentrations of nitrogen oxides (NO_x) and total chlorinated organic (RCL) were determined to be 182.7 ppm and <3.3 mg/m^3 respectively.

Scrubber Water

Analyses of scrubber water from each run indicate that no detectable levels of PCBs were concentrated in this process stream. The average analytical detection limit for these analyses was 18 ppb.

Table D-7.10. PCDF/PCDD Concentrations in Scrubber Effluent (ppb)

Isomer Group		Test 1	Test 2	Test 3
PCDF	Tetra	<0.40	<0.26	<1.0
	Penta	<1.8	<1.1	<1.6
	Hexa	<0.76	<0.72	<1.6
	Hepta	<2.9	<1.6	<6.0
	Octa	<8.8	<5.2	<7.6
PCDD	Tetra	<0.76	<0.32	<0.038
	Penta	<2.0	<1.3	<1.8
	Hexa	<2.1	<1.2	<2.4
	Hepta	<4.0	<2.6	<3.8
	Octa	<6.9	<3.6	<8.4

Results of analysis for PCDDs and PCDFs are presented in Table D-7.10.

No detectable levels of PCDF/PCDD species were present in the scrubber effluent samples collected during the program. The TCDD equivalents for these samples ranged from 0.774 to 1.47 ppt.

Operations

No major problems are reported in the unit operation at the Tibbetts Road incineration. Since a pilot-scale unit was used, operating experience is not applicable to a commercial unit.

APPENDIX D-8

INTERNATIONAL PAPER PILOT-SCALE TESTS [16]

Introduction

During the period of Nov. 15 to 22, 1985, tests were performed at the International Paper Co., Wood Treatment Facility in Joplin, MO, for the purpose of determining the ability and the operating conditions required of the Shirco pilot-scale unit to meet the EPA emissions and soil decontamination standards for incineration of their creosote pit waste.
Wood preserving processes had been performed at this plant, which used creosote and later pentachlorophenol. Prior to RCRA, settling ponds were used for waste water treatment. Nine settling ponds comprised the water treatment operation. As a result of the RCRA amendment, specifically Federal Regulation .40 CFR 261.32, the presence of pentachlorophenol and creosote designated the ponds as hazardous waste sites. Consequently, the International Paper Co. planned to clean up the site. In an effort to acquire data to enable them to perform the most cost-effective and permanent cleanup, the pilot incineration test program was run on the site. A total of 7 test runs were made over a 4-day period, which included thermal processing and accumulation of emissions and soil samples.

The primary objectives of the test program were to confirm the ability of the Shirco technology to decontaminate creosote and pentachlorophenol (PCP) laden soil and to incinerate the PCP at a verified Destruction and Removal Efficiency (DRE) of 99.9999%, and other Principal Organic Hazardous Constituents (POHCs) at a DRE of 99.99% or greater.

Feed Preparation

The waste materials processed during the test program were pre-specified combinations of the waste in Ponds 1 through 7 and the dewatered sludge from the current wastewater treatment process. Based on the results of a chemical analysis, test blends were defined from a combination of the individual pond wastes.

The goal of the International Paper Co. was to prepare a blend, or a minimal number of blends, which would maintain a steady and cost-effective thermal process during the site cleanup. Consequently, the 3 blends were chosen that would be expected to demonstrate the realistic range of operatingconditions. It was found that Pond 6 contained the highest levels of priority pollutants. Test Mix 1 coupled this pond with the much-lower contaminant level of Pond 2. The combination of Ponds 4 and 5 suggested a median pollutant range. Finally, the sludge from Ponds 1, 3, and 7 would have a lower pollutant concentration. In order to decrease the moisture content of the waste, a portion of the dewatered sludge from the current process was mixed with the waste. The proportions of each pond waste comprising the blend were determined by the International Paper Co. based on their projections of relative percentages of each pond. Waste from each pond was mixed in proportions of pond sludge and pond dirt that eventually must be decontaminated. The test mixes were blended from the following pond waste combination:

Mix 1 — 1 part Pond 6, plus 1 part Pond 2, plus 2/3 part dewatered sludge.

Mix 2 — 1 part Pond 5, plus 1 part Pond 4, plus 2/3 part dewatered sludge.

Mix 3 — 4 parts Pond 7, plus 1 part Pond 3, plus 1 part Pond 1, plus 2 parts dewatered sludge.

In order to accomodate the feed system on the pilot-scale unit, the above mixes also considered the waste consistency and its ability to be fed to the unit with minimum difficulty. The 3 blends were similar in moisture content and adhesive qualities. However, as the mix number increased, the adhesive characteristics also increased. The viscosity of all the mixes were high in that none would flow or slump.

The Mix 1 blending was performed by combining the percentages of Pond 6, Pond 2, and dewatered sludge. However, large rocks and sludge lumps were not removed as required. Subsequently, the blended mix was classified using a hand-operated finger delumper and a 3/8-in. hardware screen. The laborers, attired in protective gear, removed the rocks, operated the delumper, and forced the sludge through the screen by hand. Sludge was then put in 5-gal plastic buckets, awaiting weighing and feeding to the furnace.

Mix 2 and 3 blending was performed in essentially the same manner. The components for the mixes were staged in barrels on a slab approximately 50 ft from the waste-water treatment building. The laborers first acquired the defined proportions for each mix from the staged barrels and transferred them to the mixing area. Then small quantities of each source components were alternately passed through the hand delumper, which discharged into a 55-gal drum. Rocks were removed when found during this delumping process. Then the mix in the barrel was forced through a 3/8 inch hardware cloth screen that removed rocks, broke sludge lumps, and further homogenized the mix. Five-gal plastic pails were filled with the discharge from the screening. These pails were staged, as were those for Mix 1, for weighing and subsequent thermal processing. Only the amount of feed needed for testing was prepared each day.

When needed for feed to the furnace, a pail of waste was weighed on a platform scale. The scale was set with the pail tare weight. The weight of the material in the pail was recorded on the operation data log, along with the time that feeding from that pail was initiated.

Material to be processed was manually dumped through a feed hopper onto a metering conveyor located at the end of the furnace. The metering belt was synchronized with the furnace conveyor to control the material feedrate.

The feed metering conveyor for this furnace was designed for non-adhering contaminated soil. However, with adequate preparation and monitoring, the first sludge/soil mix fed to the furnace in a steady manner. The second sludge mix tended to be more adhesive and required constant attention to prevent bridging and subsequent feed stoppage. A laborer constantly monitored the feed and ended its passing through the gate, as required. The third waste mix tended to be more tar or batter-like. This presented enough of a rate inconsistency to require the cancellation of the emissions sampling during its processing. Otherwise, the operation of the entire system proceeded without difficulty throughout the test program.

Test Procedure

Seven test runs were conducted. The process data for the tests are given in Table D-8.1.

Previous testing performed on similar wastes had suggested that the creosote and pentachlorophenol contaminated waste could be decontaminated successfully at a nominal PCC temperature of 1,600oF. Consequently, this temperature was also used during this test program. The PCC Zone A, (drying and initial volatilization) and Zone B (high temperature volatilization and oxidation) were both controlled at a setpoint temperature of 1,650o and 1,600oF, respectively. The PCC nominal residence times were chosen based on the furnace effective length of 66.5 in.

The SCC temperature was chosen for each test condition based on EPA guidelines and the results of previous programs. The dependency of DRE on process temperature was also examined. The temperature during a specific test was adjusted using fuel and input air flow. The starved air combustion products from the primary chamber provided additional fuel to the secondary chamber.

The feedrate of contaminated soil to the PCC was controlled by the furnace- belt speed-setting and the gap opening of the feed-conveyor guillotine-gate. The speed of the feed conveyor and furnace conveyor belts are synchronized. Both are driven by the same drive motor and are geared accordingly. The guillotine-to-belt gap was 1.0 in. for Test 1 and 0.75 in. for Test 2. It is estimated that the bulk density of the contaminated soil was 70 lb/ft3. The resulting feedrates for the 30- and 15-min residence times were 46 and 70 lb/h respectively. However, the feed rate on the second day was limited to 48.1 lb/h to eliminate potential clogging of the feed inlet.

Results

A summary of the demonstration tests at International Paper at the Joplin, MO, site are presented in Table D-8.2. The following discussion presents summary results and conclusions. Specific operating problems are also discussed.

Characteristics of the Feed

The 3 feed mixes contained lumps and rocks that tended to jam at the metering gate. All mixes had

Table D-8.1. Thermal Process Test Data Summary

Date	Emissions Test No.	Feed Mix	Primary Chamber Residence Time min	Average Feedrate lb/h	Temperature, °F				Primary Chamber Power Rate kW	Secondary Chamber Fuel lb Propane/h
					Primary Zone A	Primary Zone B	Secondary Exhaust	Secondary Chamber		
11/18/85	1	1	26.8	40.00	1,600	1,616	2,130	Failed T/C	5.30	6.00
11/19/85	2	1	25.66	33.98	1,685	1,665	2,200	Failed T/C	5.71	3.27
11/20/85	3	1	15.02	69.90	1,700	1,615	2,195	2,140	7.52	6.66
1/20/85	4	1	26.1	49.18	1,635	1,615	1,800	1,755	7.30	2.14
1/21/85	5	2	15.05	46.48	1,680	1,610	2,000	1,950	6.53	2.63
1/21/85	6	3	15.13	54.56	1,620	1,580	1,980	1,930	9.76	8.87
1/21/85	7	Dewatered Sludge	15.07	Not Measured	1,600	1,500	2,125	2,070	18.75	N/A

T/C = Thermocouple

Table D-8.2. Test Results Summary

Test No.	1	2	3	4	5	6
Average DRE, %*	>99.99906	>99.99972	>99.99960	>99.99972	>99.99914	NC
Pentachlorophenol DRE, %	>99.99996	>99.99998	>99.99999	>99.99998	>99.99998	NC
Naphthalene (DRE), %	99.94076	99.99135	99.99049	99.99872	99.99872	NC
Particulate emissions, gr/dscf	0.020	0.016	0.147	0.017	0.070	NC
Average CO emissions, ppm	114	28	35	15	18	NC
Ash organic concentration, ppb**	73	ND @ 20	ND @ 30	ND @ 30	ND @ 30	ND @ 35

* Average DRE for all organic constituents except naphthalene.
* Sum of all organic constituents remaining in ash (i.e., none detected at 20 ppb)
NC - Stack sampling not conducted during Test 6.

adhesive tendencies. The second sludge mix tended to be more adhesive and required constant attention to prevent bridging and subsequent feed stoppage. The third waste mix tended to be more tar or batter-like.

The feed material was analyzed for moisture, combustibles, and contaminant content, along with density and heating value. Prior to the testing, a brief analysis was performed on 3 approximate waste compositions. These data are presented on Table D-8.3 and became the basis for the initial process operation settings.

Table D-8.3. Pretest Waste Analysis Data (% on as-received basis)

Pond Nos. (Composing Waste)	Moisture*	% Volatile	High Heating Value (HHV) Btu/lb
5 & 2	24.9	25.3	4,500
3 & 7	26.3	18.0	2,800
4 & 6	29.9	25.8	6,200

% Moisture includes all weight lost by drying at 103°C.

Table D-8.4 presents an organic analysis of soil samples for each test run for both hazardous constituents and other organic compounds identified in the samples by GC/MS. The highest concentration of hazardous constituents consisted of benzo-(a)anthracene (470-1,300 ppm), carbazole (1,700-4,500 ppm), chrysene (720-2,200 ppm), fluoranthene (110-14,000 ppm), naphthalene (91-2,600 ppm), pentachlorophenol (4,600-12,000 ppm), and phenanthrene (240-22,000 ppm). Analyses were not conducted on the waste feed samples from Test 7.

Characteristics of the Furnace Ash

The residual organic concentration of each constituent identified in the waste feed was nondetectable in the furnace ash (detection limit ranging from 20 to 40 ppb) for each run, with the exception of the biphenyl (20 ppb) and naphthalene (53 ppb) compounds in Test 1. It is not clear whether the presence of these compounds is process related or due to laboratory interferences. Nonetheless, the reported concentrations were well below the level required for ash delisting (i.e., approximately 1,000 ppb for naphthalene).

Organic Destruction and Removal Efficiency (DRE)

The incinerator destruction and removal efficiency for each constituent identified in the waste feed is given in Table D-8.5 for Tests 1-5. Stack gas sampling was not performed during Test 6 due to sampling equipment problems.
The DREs for each test run exceeded RCRA performance standards of 99.99% for pentachlorophenol and for all other POHCs with the exception of naphthalene. The DRE for naphthalene fell short of the 99.99% standard during Tests 1 and 5.

Naphthalene is a natural contaminant of XAD-2 resins and as such, should not be used to assess system performance. The DRE for pentachlorophenol, for instance, which is more difficult to destroy than naphthalene, exceeded 99.9999% during each test.

Particulate Emissions

For the first 5 tests, with the exception of Test 3, particulate emissions ranged from 0.016 to 0.07 gr/dscf corrected to 7% O_2, as compared to the RCRA standard of 0.08 gr/dscf. Particulate emissions reported for Test 3 were 0.147 gr/dscf. The excessive emissions were a result of soot formation caused by an improper control of oxygen in the PCC. The stack sampling contractor's oxygen monitor was not functioning throughout the entire test program, and Shirco operators were forced to set incinerator air flow conditions purely by "ear". Given the fact that incinerator operating conditions were adjusted without the aid of flue gas O_2 monitoring, the overall results were considered satisfactory.

Table D-8.4.Waste Feed Analysis, ppm

Constituent	Test No. 3					
	1	2	3	4	5	6
Acenaphthene	2,300	1,700	1,700	4,200	ND	40*
Acenaphthylene	1,800	ND	ND	ND	ND	ND*
Anthracene	6,700	4,600	4,600	11,000	ND	44*
Benzo (a) anthracene	690*	650*	470*	1,300	ND	ND
Biphenyl	ND	ND	430	1,300	ND	51
Carbazole	1,700	1,700	2,700	5,400	ND	ND
Chrysene	ND	870	720*	2,200	ND	ND
Dibenzofuran	1,200	1,100	760	2,800	ND	22
Dibenzothiophene	480	750	900	ND	430	44
Fluoranthene	5,500	4,100	4,000	14,000	ND	100*
Fluorene	2,200	2,000	2,400	4,600	ND	40*
1-Methylnaphthalene	850	1,700	2,500	2,100	3,000	320
2-Methylnaphthalene	1,100	2,800	4,100	4,400	5,600	580
Naphthalene	129*	1,500	2,600	2,500	600*	91*
Pentachlorophenol	8,600	6,800	12,000	11,000	6,800	4,600
Phenanthrene	8,000	7,500	8,000	22,000	2,100*	240
Pyrene	5,800	4,000	2,200	7,400	ND	87*
Detection limit (ppm)						
Acids	150	140	140	250	120	15
Base Neutral	760	690	1,800	1,300	7,400	360

ND - None detected
* Trace concentrations detected blow the average reporting (detection) limit.

Stack gas sampling was not performed during Test 6 due to sampling equipment problems, nor for Test 7, which was conducted solely to determine furnace ash quality.

Operations

The pilot-scale unit setup, dismantling, and decontamination proceeded smoothly and in a timely manner. Set-up was completed in 5 h. The dismantling, decontamination, and packing for transport were completed in 12 working hours with the exception of difficulties encountered with the feed system and 1 SCC thermocouple, which required replacement. Otherwise, all of the pilot-scale unit equipment operated well throughout the week.

The difficulty with the feed system was a direct result of its mismatch with the feed material. Rocks tended to jam at the metering gate, and at times in the rotary airlock. The metering gate in the feed conveyor allows material on the moving belt below it to pass under and therefore spreads, levels, and meters the feed into the furnace. This effect was expected to work well on an expected drier feed material. However, heavy rains during the previous week, coupled with a more cohesive and adhesive material than expected, did not allow unattended feeding. With feed mix No. 2 (and to a greater extent feed mix No. 3), bridging at the gate and adhesion to the rotary airlock rotors was experienced. A conventional Shirco leveling-screw and belt-conveyor-type spreading/leveling system without a rotary airlock should handle the type of waste experienced without any problems.

Table D-8.5. Flue Gas Destruction and Removal Efficiencies

Test No.	1	2	3	4	5
Samples vol., dscf	42.94	116.10	122.22	86.48	107.89
Stack flow, dscfm	115.38	80.68	106.44	119.26	111.43
Waste feed, lb/h	40.0	34.0	69.9	49.2	46.5
Constituent		DRE (%)			
Acenaphthene	>99.99980	*	*	*	*
Acenaphthylene	>99.99985	>99.99994	>99.99996	>99.99996	*
Anthracene	>99.99995	>99.99998	>99.99998	>99.99998	*
Benzo(a)anthracene	>99.99948	>99.99983	>99.99986	>99.99998	*
Biphenyl	*	*	>99.99985	>99.99846	*
Carbazole	>99.99979	>99.99994	>99.99998	>99.99997	*
Chrysene	*	>99.99988	>99.99991	>99.99993	*
Dibenzofuran	99.99926	99.99980	99.99978	99.99986	*
Dibenzothiopene	>99.99926	>99.99986	>99.99993	*	>99.99973
Fluoranthene	99.99968	>99.99997	>99.99998	99.99997	*
Fluorene	>99.99984	>99.99995	>99.99997	>99.99996	*
1-Methylnaphthalene	99.99686	99.99905	99.99822	99.99905	99.99824
2-Methylnaphthalene	99.99435	99.99807	99.99682	99.99918	99.99785
Naphthalene	99.94076	99.99135	99.99049	99.99872	99.98482
Pentachlorophenol	>99.99996	>99.99998	>99.99999	>99.99998	>99.99998
Phenanthrene	99.99956	99.99996	99.99998	99.99996	>99.9999
Pyrene	99.99969	>99.99997	>99.99997	>99.99998	*

Constituent not detected in waste feed.

APPENDIX D-9

TIMES BEACH PILOT-SCALE TESTS [17,18]

Introduction

The Times Beach contamination originated at the Northeast Pharmaceutical and Chemical Co. plant in Verona, MO, where 2,3,7,8-tetrachlorodibenzo-p-dioxin was an unwanted byproduct from the manufacture of disinfectants. The company paid a waste-oil hauler to remove toxic sludge containing the chemical. He mixed the fluid with waste oil that he later sprayed on various sites around Missouri to keep dust down. Those sites included four horse arenas, gravel roads in Times Beach, a trailer park, and his own farm.

The contaminated soil was later used as fill on residential property in various places, where some hot spots have shown contamination levels as high as 90 ppb. Rain eventually spread the fill onto other property and into waterways. At least 150,000 tons of dioxin-laced soil in Times Beach requires treatment.

The Missouri Dept. of Natural Resources (MDNR) decided in 1983 to set up a field test facility, where any company that thought it had a good method for treating dioxin could demonstrate their technology. For a $16,500 fee to cover its costs, MDNR offered developers an area at the site containing controlled-quality contaminated soil that the agency would sample before and after the treatment attempt.

During the period of July 5 through 12, 1985, the Shirco Infrared Systems pilot-scale unit was onsite at the Times Beach Dioxin Research Facility to demonstrate the Shirco technology capability to successfully decontaminate soil laden with 2,3,7,8-tetrachlorodibenzo-p-dioxin (TCDD). Equipment set-up, preliminary operation, test operation, decontamination, and disassembly was included in this period. The test operation of the unit was conducted on July 10 and 11. The MDNR Environmental Div. coordinated the site preparation. Shirco Infrared Systems, Inc. prepared the test protocol and operated the unit.

Test Procedure

The testing was planned so that adequate material quantity would be processed and adequate samples of emissions and soil be taken to demonstrate that the soil and emissions decontamination and destruction efficiency levels would be reached. Operations were evaluated at 30-min and 15-min primary-combustion-chamber residence times. A 7-h emissions-and-soil-sample duration accompanied the 30-min residence time, and a 2-h and 22-min duration was used for the 15-min residence time. The unit feedrate averaged 47.68 lb/h at a 1-in. bed depth during the 30-min residence time exposure. The feedrate during the 15-min residence time test averaged 48.12 lb/hr with a 0.75 in. bed depth.

Another important process, operating parameter was temperature. Over the residence length of the PCC, temperature was controlled in 2 equal length zones. During the 30-min residence time test, the feed end zone was maintained at a nominal temperature of 1,560°F and the discharge end zone was maintained at a nominal 1,550°F. For the 15-min residence time test, the respective temperatures were both 1,490°F. The SCC was heated by a propane burner (compared to the electric resistance heating elements used in the PCC), and its temperature was maintained above 2,200°F during both tests. The nominal SCC temperatures were 2,250° and 2,235°F, respectively. The temperature of the exhaust gas leaving the wet gas scrubber and discharging into the atmosphere was nominally 165°F over the entire test duration.

Stack gas sampling of the pilot-scale unit during the Times Beach dioxin destruction program was conducted using the Modified Method 5 train. Samples of the contaminated Times Beach soil were collected from the feed hopper to the incinerator in conjunction with each of the test runs. Three to four

grab samples were collected during each run and composited to a single sample for subsequent analysis. Samples of furnace ash were collected during the course of each test run by means of an access port located in the ash hopper. Four to five grab samples were collected during each run and composited to a single sample for subsequent analysis. Samples of the scrubber effluent water were collected at 30-min intervals throughout each test run. The samples from the recirculating system were collected from the blowdown tank and composited to provide a single, one-liter sample for each run.

Results

Table D-9.1 provides a summary of the test results. The contaminated soil samples used in the two tests contained 230 and 155 ppb of 2,3,7,8-tetrachlorodibenzo-p-dioxin (2,3,7,8-TCDD). No 2,3,7,8-TCDD was detected in the furnace ash from either run at detection limits of 0.038 ppb and 0.033 ppb. Similarly, no 2,3,7,8-TCDD was detected in the stack gas from either run at detection limits of 0.002 and 0.003 ng/m^3. Based on these detection limits, the demonstrated destruction and removal efficiency (DRE) of the Shirco pilot-scale unit during the Times Beach demonstration was >99.999996 and >99.999989%. No 2,3,7,8-TCDD was detected in the scrubber slurry samples at a detection limit of 1 ppb.

Table D-9.1. Summary of Results

	RCRA Performance Standard	30-min Residence	15-min Residence
Composite feed soil 2,3,7,8-TCDD concentration		227 ppb	156 ppb
Composite furnace ash 2,3,7,8-TCDD concentration	<1 ppb	Not detected at 38 ppt	Not detected at 33 ppt
Particulate emissions at 7% O_2	0.08 gr/dscf	0.001 gr/dscf	0.0002 gr/dsc
Gas phase DRE of 2,3,7,8-TCDD	>99.9999%	>99.999996%	>99.999989%

APPENDIX D-10

SIMULATED CREOSOTE PIT PILOT-SCALE TESTS [16]

During the week of Apr. 8, 1985, the Shirco pilot-scale unit was used to incinerate a simulated creosote-pit waste. The simulated material was 22% creosote, 1% pentachlorophenol, 8% water, and 69% soil. The simulated creosote feed analysis is presented in Table D-10.1. The material was fed to the PCC, which was maintained at 1,600° to 1,800°F; the SCC was maintained at 1,800° to 2,200°F. The operating conditions are shown in Table D-10.2. The PCC was operated with no combustion air and no added auxiliary electrical power.

Table D-10.1.Simulated Creosote Feed Analysis, wt%

Test No.	Creosote	Penta-chlorophenol	Water	Inert (dry soil)
1	24.04	1.29	7.06	67.61
2	20.65	0.80	7.93	70.62
3	24.54	0.89	7.41	67.16
4	22.95	0.81	7.67	68.57
5	22.20	0.85	7.71	69.24
6	21.55	0.96	7.67	69.82
7	24.52	0.92	7.39	67.17

Resulting particulate emissions rates were between 0.007 and 0.012 gr/dscf corrected to 7% oxygen; this concentration is significantly below the RCRA performance standard of 0.08 gr/dscf. The calculated destruction and removal efficiencies (DREs) of the principal organic hazardous constituents (POHC) were at or above the RCRA performance standard of 99.99%, except where the POHCs were below the detectable limit. The pentachlorophenol was identified as being the most difficult feed component of the POHCs to destruct. The test results indicated that the pentachlorophenol was below the detection limit in both the stack gas and furnace ash analyses. The resulting DREs calculated at the detection limit were greater than 99.99% in every case and as high as 99.99986%. The furnace ash analysis and DREs for the 15 identified POHCs are reported in Tables D-10.3 and D-10.4.

Table D-10.2.Simulated Creosote Waste Incineration Operating Conditions

Test No.	Bed Thickness in.	Solid Phase Residence Time min	Solid Feedrate lb/h	Temp. Zone A °F	Temp. Zone B °F	Temp. Bed Chamber °F
1	1.0	25	42.4	1,625	1,672	2,200
2	1.0	45	20.4	1,632	1,606	2,166
3	0.5	25	40.6	1,634	1,691	2,195
4	1.5	25	58.3	1,635	1,867	2,210
[illegible]	1.0	15	121.0	1,612	1,725	2,189
	1.0	25	56.4	1,615	1,658	1,810
7	1.0	25	61.9	1,818	1,883	2,220

Table D-10.3. Furnace Ash Analysis (ppm)

POHCs:	Run No. 1	2	3	4	5	7
1 Pentachlorophenol	ND	ND	ND	ND	ND	ND
2 Phenol	ND	ND	ND	ND	ND	ND
3 2,4-Dimethylphenol	ND	ND	ND	ND	ND	ND
4 Indeno (1,2,3-CD) Pyrene	ND	ND	ND	0.547	0.03	0.019
5 Benzo (B) & (K) Fluoroanthene	0.057	ND	ND	0.56	0.12	ND
6 Benzo (A) Pyrene	0.032	ND	ND	0.472	0.137	ND
7 Benz (A) Anthracene/Chrysene	0.495	ND	0.045	ND	ND	1.213
8 Napthalene	2.36	0.036	3.447	1.438	0.248	0.454
9 Acenaphthene	0.014	ND	ND	0.006	ND	ND
10 Acenaphthylene	0.017	ND	ND	0.011	ND	ND
11 Fluorene	ND	ND	ND	0.005	ND	ND
12 Anthracene/Phenanthrene	10.79	0.092	2.425	7.037	0.403	4.5
13 Fluoranthene	5.992	0.0763	0.711	6.795	0.362	5.058
14 Benzo (GHI) Perylene	ND	ND	ND	0.08	0.026	0.008
15 Pyrene	2.133	0.013	0.173	2.458	0.164	1.348

ND = Not detectable

Table D-10.4 Destruction and Removal Efficiencies, %

POHCs:	Run No. 1	2	3	4	5	6	7
1 Pentachlorophenol	>99.99893	>99.99614	>99.99834	>99.99986	>99.99945	>99.99902	>99.99703
2 Phenol	99:99119	>99.99532	>99.99775	>99.99820	>99.99929	>99.99858	99.99801
3 2,4-Dimethylphenol	99.99731	99.99776	99.99968	99.99978	>99.99989	>99.99979	99.99971
4 Indeno (1,2,3-CD) pyrene	>99.85641	>99.92262	>99.96295	>99.97037	>99.98833	>99.97662	>99.97330
5 Benzo (B) & (K) fluoroanthene	99.99976	99.99987	99.99994	99.99995	>99.99998	>99.99996	>99.99995
6 Benzo (A) pyrene	>99.97370	>99.98583	>99.99321	>99.99457	>99.99786	>99.99571	>99.99511
7 Benz (A) anthracene/chrysene	99.99987	99.99993	99.99997	99.99992	>99.99999	>99.99998	99.99984
8 Napthalene	99.99678	99.99929	99.99966	99.99886	99.99976	99.99961	99.99596
9 Acenaphthene	99.99990	99.99996	99.99998	99.99983	99.99995	99.99995	99.99924
10 Acenaphthylene	99.99925	99.99948	99.99975	99.99955	99.99990	>99.99988	99.99859
11 Fluorene	99.99992	99.99993	99.99996	99.99974	99.99993	99.99995	99.99880
12 Anthracene/phenanthrene	99.99977	99.99987	99.99994	99.99877	99.99984	99.99990	99.99623
13 Fluoranthene	99.99968	99.99986	99.99993	99.99750	99.99972	99.99983	99.99675
14 Benzo (GHI) perylene	>99.38346	>99.66776	>99.84092	>99.87280	>99.94991	>99.89962	>99.88535
15 Pyrene	99.99984	99.99993	99.99996	99.99951	99.99995	99.99995	99.99823

> - DREs were calculated at detection limits.

REFERENCES FOR APPENDICES

1. USEPA, 1988. Technology Evaluation Report, SITE Program Demonstration Test, Shirco Infrared Thermal Incineration System, Peak Oil, Brandon, FL EPA/540/5-88/0020. EPA Risk Reduction Engineering Laboratory, Office of Research and Development, Cincinnati, OH 45268.

2. USEPA, 1989. Technology Evaluation Report, SITE Program Demonstration Test, Shirco Pilot-Scale Infrared Incineration System, Rose Township Demode Road Superfund Site. EPA Risk Reduction Engineering Laboratory, Office of Research and Development, Cincinnati, OH 45268.

3. Vendor information from ECOVA Corp., Dallas, TX, 1989.

4. Final Report: Demonstration Test - Onsite PCB Destruction - Shirco Infrared Portable Unit at Florida Steel Indiantown Mill Site, Indiantown, FL Report Number 821-86-1, ECOVA Corp., Dallas, Tex., Sept. 17, 1986.

5. Technical Paper: Remediation of PCB-Contaminated Soils by Mobile Infrared Incineration. G. J. McCartney and J. E. Burford, OH Materials Corp., Findlay, OH, 1988.

6. Draft of USEPA TSCA Permit to OH Materials Corporation to Dispose Polychlorinated Biphenyls (PCBs), OH Materials, Findlay, OH, 1988.

7. Telephone communication between Sy Rosenthal, Foster Wheeler Enviresponse, Inc. and George Hay, OH Materials Corp., Findlay, OH, Mar. 14, 1989.

8. Thermal Destruction Unit Demonstration Test Plan for LaSalle Electric Utilities, PCB Abatement Project, Illinois EPA, Springfield, IL, Dec. 1988.

9. Remedial Investigation Report, LaSalle Electric Utilities Site, Illinois EPA, Springfield, IL, 1988.

10. Illinois Environmental Protection Agency Operating Approval to Westinghouse HAZTECH, Inc. for use of Thermal Destruction Unit at LaSalle Electric Utilities PCB Abatement Project, Illinois EPA, Springfield, IL, Nov. 23, 1988.

11. Summary of Remedial Alternative Selection, LaSalle Electric Utilities, LaSalle, IL, Illinois EPA, Springfield, IL, Mar. 29, 1988.

12. Telephone communication between Sy Rosenthal, Foster Wheeler Enviresponse, Inc., and Richard Lange, Illinois EPA, Springfield, IL, Mar. 30, 1989.

13. Demonstration Test Report: PCB Destruction Unit, Shirco Portable Demonstration Unit - Infrared Incineration - Twin Cities Army Ammunition Plant, ECOVA Corp., Dallas, TX., Oct. 23, 1987.

14. Final Report: Onsite Incineration Testing at Brio Site, Friendswood, TX, Shirco Infrared Systems Portable Test Unit, Report No. 846-87-1, ECOVA Corp., Dallas, TX, Feb. 10-13, 1987.

15. Final Report: Onsite Incineration Testing of Tibbetts Road Superfund Site, Barrington, NH, Shirco Infrared Systems Portable Test Unit, Report No. 834-87-1, ECOVA Corp., Dallas, TX, Nov. 2, 1987.

16. Final Report: Onsite Incineration Testing of Shirco Infrared Systems Portable Pilot Test

Unit at International Paper Co. Wood Treatment Plant, Joplin, MO, Report No. 804-86-2, ECOVA Corp., Dallas, TX, May 29, 1986.

17. Summary Report: Onsite Incineration Testing of Times Beach Dioxin Research Facility, Times Beach, MO by Shirco Infrared Systems Portable Test Unit, July 8-12, 1985, Report No. 815-85-1, ECOVA Corp., Dallas, TX., Aug. 28, 1985.

18. Environmental Performance Evaluation of the Shirco Infrared Incinerator, Dioxin Destruction Demonstration Program, Times Beach, MO, ERT Report No. C-3044-D-1, ECOVA Corp., Dallas, TX, Aug. 29, 1985.

19. Results of the Shirco Infrared Incinerator Synthetic Hazardous Waste Tests, ECOVA Corp., Dallas, TX, May 7, 1985.