EPA/540/G-91/010a
Directive No. 9835.1 (c)

GUIDANCE ON OVERSIGHT OF POTENTIALLY RESPONSIBLE PARTY REMEDIAL INVESTIGATIONS AND FEASIBILITY STUDIES

Final

U.S. Environmental Protection Agency
Office of Waste Programs Enforcement
Washington, D.C. 20460

VOLUME 1

Printed on Recycled Paper

ACKNOWLEDGEMENTS

This document was developed by the Guidance and Evaluation Branch of the CERCLA Enforcement Division in EPA's Office of Waste Programs Enforcement. Matthew Charsky served as EPA's Project Coordinator. The project was directed by Sally Mansbach, Acting Director CERCLA Enforcement Division, with the assistance of Arthur Weissman, Guidance and Evaluation Branch Chief.

The following Regional, State, and Headquarters individuals provided significant input in the development and review of this document:

Susan Cange	EPA, OERR
Perry Katz	EPA, Region II
Patricia Tan	EPA, Region III
Donald Guinyard	EPA, Region IV
Rick Karl	EPA, Region V
Pauletta France-Isetts	EPA, Region VII
Jeff Rosenbloom	EPA, Region IX
Wayne Grother	EPA, Region X
Kevin Cabble	EMSL-LV
John Rotert	EMSL-LV
Tony Diecidue	EPA, OWPE
Carrie Capuco	EPA, OWPE
Patty Bubar	EPA, OWPE
Rashalee Levine	EPA, OWPE
Steve Hooper	EPA, OWPE
Steve Golian	EPA, OERR
Phil King	EPA, OERR/AZ State
Sandra Conners	EPA, OECM

This handbook was produced by PRC Environmental Management, Inc., under EPA Contract No. 68-01-7331. Paul Dean served as Project Manager for PRC Environmental Management, Inc.

TABLE OF CONTENTS

Section			Page
B	OVERSIGHT OF SAMPLING AND ANALYSIS ACTIVITIES		B-1
	B.1	INITIAL OVERSIGHT ACTIVITIES	B-1
		B.1.1 Preparation	B-1
		B.1.2 Preliminary On-site Activities	B-4
	B.2	MEDIA SPECIFIC SAMPLING ACTIVITIES	B-6
		B.2.1 Surface Water	B-6
		B.2.2 Ground Water	B-17
		B.2.3 Soil Water	B-23
		B.2.4 Surface Soil	B-31
		B.2.5 Subsurface Soil	B-35
		B.2.6 Soil Vapor	B-37
		B.2.7 Sludge and Slurry	B-41
		B.2.8 Containerized Waste (Drums, Tanks, Hoppers, Bags, Waste Piles)	B-48
		B.2.9 Ambient Air	B-52
	B.3	COMMON SAMPLING ACTIVITIES	B-56
		B.3.1 Containers	B-57
		B.3.2 Labels/Tags	B-59
		B.3.3 Preservation/Handling	B-60
		B.3.4 Chain-of-Custody Information	B-64
	B.4	POST-SAMPLING ACTIVITIES	B-66
		B.4.1 Packaging	B-66
		B.4.2 Shipping	B-69
		B.4.3 Decontamination	B-72
	B.5	QUALITY REVIEW ACTIVITIES	B-74
		B.5.1 Quality Review Samples	B-74
	B.6	DOCUMENTATION OF SAMPLING AND ANALYSIS ACTIVITIES	B-78
		B.6.1 Oversight Team Field Activity Report/Logbook	B-78
		B.6.2 Oversight Team Photographic/Video Log	B-80
C	OVERSIGHT OF WELL DRILLING AND INSTALLATION ACTIVITIES		C-1
	C.1	INITIAL OVERSIGHT ACTIVITIES	C-1
	C.2	BOREHOLE ADVANCEMENT	C-3
		C.2.1 Drilling Activities	C-3
		C.2.2 Soil Sample Collection	C-13
		C.2.3 Decontamination	C-16

TABLE OF CONTENTS (continued)

Section		Page
C.3	WELL DESIGN AND INSTALLATION	C-19
	C.3.1 Well Design	C-19
	C.3.2 Well Installation	C-23
	C.3.3 Well Completion	C-24
C.4	POST INSTALLATION	C-25
	C.4.1 Well Development	C-25
	C.4.2 Ground-Water Sampling	C-27
C.5	DOCUMENTATION OF WELL DRILLING AND INSTALLATION ACTIVITIES	C-28
	C.5.1 Oversight Team Field Activity Report/Logbook	C-28
	C.5.2 Oversight Team Photographic/Video Log	C-29

LIST OF TABLES

Table		Page
B-1.	SAMPLE BOTTLES RECOMMENDED BY SAMPLE TYPE	B-58
B-2.	SAMPLE PRESERVATION PROCEDURES	B-63
C-1.	DRILLING METHODS SUMMARY	C-6
C-2.	SOIL DENSITY/CONSISTENCY	C-17
C-3.	WELL DEVELOPMENT TECHNIQUES	C-26

LIST OF FIGURES

Figure		Page
B-1.	COMMON SURFACE WATER SAMPLERS	B-10
B-2.	COMMON SURFACE WATER SAMPLERS	B-11
B-3.	COMMON SEDIMENT SAMPLERS	B-13
B-4.	GROUND-WATER SAMPLERS	B-20
B-5.	DIVISIONS OF SUBSURFACE WATER	B-25
B-6.	LYSIMETERS	B-27
B-7.	SUCTION SAMPLERS	B-29
B-8.	COMMON SOIL SAMPLES	B-33
B-9.	SPLIT SPOON SAMPLER	B-36
B-10.	SLUDGE AND SLURRY SAMPLERS	B-44
B-11.	TYPICAL SAMPLE IDENTIFICATION TAG	B-61
B-12.	CHAIN-OF-CUSTODY RECORD	B-65
B-13.	CUSTODY SEALS AND BILL OF LADING	B-71
C-1.	AUGERS	C-8
C-2.	MUD AND WATER ROTARY DRILLING	C-9
C-3.	CABLE TOOL STRING ASSEMBLY COMPONENTS	C-11
C-4.	SOIL BORING LOG	C-14
C-5.	SOIL CLASSIFICATION CHART	C-15
C-6.	TYPICAL GROUND-WATER MONITORING WELL CROSS-SECTION	C-20

LIST OF ACRONYMS

AA	Assistant Administrator
AD	Air Division
AERIS	Aid for Evaluating the Redevelopment of Industrial Sites
AOC	Administrative Order on Consent
ARARs	Applicable or relevant and appropriate requirements
ARCS	Alternative Remedial Contract Strategy
ATSDR	Agency for Toxic Substances and Disease Registry
ATTIC	Alternate Treatment Technology Information Center
BBS	Bulletin Board System
BTAG	Biological Technical Assistance Group
CA	Cooperative Agreement
CD	Consent Decree
CDC	Center for Disease Control
CEAM	Center for Exposure Assessment Modeling
CEPP	Chemical Emergency Preparedness Program
CERCLA	Comprehensive Environmental Response, Compensation and Liability Act
CERCLIS	Comprehensive Environmental Response, Compensation and Liability Information System
CLP	Contract laboratory program
COLIS	Computerized On-Line Information Systems
CORA	Cost of Remedial Action
CRP	Community relations plan
DOC	Department of Commerce
DOD	Department of Defense
DOE	Department of Energy
DOI	Department of the Interior
DOJ	Department of Justice
DOL	Department of Labor
DOT	Department of Transportation
DQO	Data quality objectives
EA	Ecological/environmental assessment
ECAO	Environmental Criteria and Assessment Office
EECA	Engineering Evaluation and Cost Analysis
EEM	Environmental Evaluation Manual
EIS	Environmental impact statement
E-MAIL	Electronic mail system
EMSL	Environmental Monitoring System Laboratory
EPA or "the Agency"	U.S. Environmental Protection Agency
ERCS	Emergency Response Contracting Strategy
ERIS	Expert Resources Inventory System
ERL	Environmental Research Laboratory
ERT	Environmental Response Team
ESD	Environmental Services Division
EST	Eastern Standard Time
FEMA	Federal Emergency Management Agency
FIT	Field Investigation Team
FFA	Federal facility agreement
FMO	Financial management office
FSP	Field sampling plan
HSCD	Hazardous Site Control Division
HEAST	Health Effects Assessment Summary Tables

LIST OF ACRONYMS
(continued)

HHEM	Human Health Evaluation Manual
HHS	Health and Human Services
HRS	Hazard Ranking System
HSP	Health and safety plan
HWCD	Hazardous Waste Collection Database
IAG	Interagency agreement
IFMS	Information Management Systems
IMC	Information Management Coordinator
IRIS	Integrated Risk Information System
LDR	Land Disposal Restriction
MCL	Maximum contaminant level
MCLG	Maximum contaminant level goal
NCC	National Computer Center
NCP	National Contingency Plan
NEIC	National Enforcement Investigations Center
NOAA	National Oceanic & Atmospheric Administration
NPDES	National pollutant discharge elimination system
NPL	National Priorities List
NPTN	National Pesticides Telecommunications Network
NRC	Nuclear Regulatory Commission
OE	Office of Enforcement
O&M	Operation and maintenance
OECM	Office of Enforcement and Compliance Monitoring
OERR	Office of Emergency and Remedial Response
OFFE	Office of Federal Facilities Enforcement
OGC	Office of General Counsel
OHEA	Office of Health and Environmental Assessment
ORC	Office of Regional Counsel
ORD	Office of Research and Development
OSHA	Occupational Safety and Health Administration
OSWER	Office of Solid Waste and Emergency Response
OWPE	Office of Waste Programs Enforcement
PA	Preliminary assessment
PC	Personal computer
PRGs	Preliminary remediation goals
PRP	Potentially responsible party
PWS	Public Water Supply
QA/QC	Quality assurance/quality control
QAPjP	Quality Assurance Project Plan
RAGS	Risk Assessment Guidance for Superfund
RAS	Routine analytical sampling
RCRA	Resource Conservation and Recovery Act
RD/RA	Remedial design/remedial action
REM	Remedial Engineering Management
RFD	Reference dosage
RI/FS	Remedial investigation/feasibility study
RME	Reasonable maximum exposure
ROD	Record of decision
RPM	Remedial Project Manager
RREL	Risk Reduction Engineering Laboratory
RSKERL	Robert S. Kerr Environmental Research Laboratory
SAP	Sampling and analysis plan
SAS	Special analytical sampling

LIST OF ACRONYMS
(continued)

SCAP	Superfund Comprehensive Action Plan
SCEES	Site Cost Estimate and Evaluation Study
SEAM	Superfund Exposure Assessment Manual
SFWS	State Fish and Wildlife Service
SGS	State Geological Survey
SHPO	State Historic Preservation Office
SI	Site inspection
SIF	Site Information Form (CERCLIS)
SITE	Superfund Innovative Technology Evaluation Program
SMOA	Superfund Memorandum of Agreement
SNL	Special notice letter
SOP	Standard operating procedures
SOW	Statement of Work
SPO	State Project Officer
SRI	Superfund Remediation Information
START	Superfund Technical Assistance Response Team
TAP	Treatability Assistance Program
TAT	Technical Assistance Team
TSCA	Toxic Substances Control Act
TES	Technical Enforcement Support
TIX	Technical Information Exchange
TRIS	Toxic Release Inventory System
TS	Treatability Study
TST	Technical Support Team
UAO	Unilateral Administrative Order
UIC	Underground Injection Control
USCOE	U.S. Army Corps of Engineers
USDA	United States Department of Agriculture
USFWS	United States Fish and Wildlife Service
USGS	United States Geological Service
WD	Water Division
WMD	Waste Management Division
WP	Work Plan

VOLUME 2

INTRODUCTION

Purpose

Volume 2 of this document describes the oversight of sampling and analysis activities (Appendix B1) and of well drilling and installation activity (Appendix C1) conducted during a Remedial Investigation (RI) by potentially responsible parties (PRPs) at Enforcement-lead sites addressed under the Comprehensive Environmental Response, Compensation and Liability Act, as amended (CERCLA). Checklists to assist in the documentation of sampling and analysis activities are contained in Appendix B2 while documentation of well drilling and installation activities are contained in Appendix C2. The information presented in Volume 2 is consistent with the references listed at the end of Appendices B and C.

Volume 1 parallels activities described in the "Guidance for Conducting Remedial Investigations and Feasibility Studies Under CERCLA" (OSWER Directive No. 9355.3-01, October, 1988, referred to here as the "RI/FS Guidance") and the "Model Statement of Work for a Remedial Investigation and Feasibility Study Conducted by Potentially Responsible Parties" (OSWER Directive No. 9835.8, June 2, 1989, referred to here as the "Model SOW for PRP-lead RI/FSs"). It provides project managers with the procedures required to organize and perform appropriate oversight duties and responsibilities. This document is guidance only; it is not a binding set of requirements and does not create rights for any party.

For a more in-depth discussion of the entire Superfund Enforcement Program including removal and remedial actions, refer to the "Enforcement Project Management Handbook" (OSWER Directive No. 9837.2-A, January 1991). The handbook addresses the remedial planning and implementation process from the point of the baseline PRP search (generally conducted after the site is placed on the National Priorities List (NPL)), to the point of completion of remedial activity and the site's deletion from the NPL.

Intended Audience

The intended audience for this document is remedial project managers (RPMs), although it can be adapted for use by other parties such as States, PRPs, contractors and other persons involved in the RI/FS process.

Summary of Appendices

Appendix B

Appendix B, "Oversight of Sampling and Analysis Activities" describes the activities that the oversight team should conduct during field activities. The appendix discusses initial oversight activities such as plan reviews and preliminary on-site activities as well as specific sampling oversight activities for the following nine media:

- Surface Water
- Ground Water
- Soil Water
- Surface Soil
- Sub-surface Soil
- Soil Vapor
- Sludge and Slurry
- Containerized Waste (Drums, Tanks, Hoppers, Bags, and Waste Piles)
- Ambient Air

The appendix describes sampling locations, equipment, and techniques as well as field analytical techniques for each media. The appendix also discusses sample containers, labels, preservation, chain-of-custody, packaging shipping, and quality review.

Appendix C

Appendix C, "Oversight of Well Drilling and Installation Activities" describes the activities that the oversight team should conduct during well drilling and installation activities such as well location, geologic units, type of drilling, drilling fluids, drilling waste, and decontamination as well as soil sample collection and logging. The appendix also describes well design, installation, completion and development.

APPENDIX B

OVERSIGHT OF SAMPLING AND ANALYSIS ACTIVITIES

In accordance with CERCLA Section 104(b), sampling and analysis activities may be conducted by the potentially responsible parties (PRPs). This appendix describes the activities that an oversight assistant should conduct and the factors to be considered during oversight of PRP sampling and analysis activities.

This appendix is based on other, more complete sampling and analysis guidance documents and should not be considered a substitute for them. Specifically, this appendix includes information on:

- Initial oversight activities;
- Media-specific sampling activities;
- Common sampling activities;
- Post-sampling activities; and
- Quality review activities.

The organization of this chapter corresponds to the Field Activity Report for oversight of sampling and analysis (see Section B.6.1 in this Appendix).

B.1 INITIAL OVERSIGHT ACTIVITIES

There are a number of activities that the oversight assistant should perform before beginning the sampling and analysis plan (SAP). These activities will help the oversight assistant to: become familiar with the planned site activities, including the health and safety requirements; organize and plan the resources for oversight; coordinate with other parties involved at the site; and make the necessary preliminary observations at the site.

B.1.1 Preparation

Preparation for conducting oversight involves reviewing the site Work Plan, the SAP, and the health and safety plan; securing the necessary oversight tools; and coordinating with the appropriate parties before arriving at the site.

Review Sampling and Analysis Plan

The SAP consists of the field sampling plan (FSP) and the quality assurance project plan (QAPjP). The content and purpose of these plans are discussed in greater detail in Volume 1, Chapter 3 and in EPA's "Guidance for Conducting Remedial Investigations and Feasibility Studies Under CERCLA" (U.S. EPA, 1988 Chapter 2 and Appendix B).

The RPM and oversight assistant should review the SAP to become familiar with the media that will be sampled; the location, number and type of samples that will be collected; the equipment, techniques, and procedures that are planned for collecting, labeling, preserving, packaging, and shipping samples; the procedures for recordkeeping and documentation; and the quality

assurance built into the plan to achieve project data quality objectives. The oversight assistant should review the names and backgrounds of field personnel as well. Familiarity with the details of the SAP will allow the oversight assistant to focus on observing the activities at the site.

To determine the objective of the planned sampling activities, the RPM and oversight assistant should focus on the following information when reviewing the SAP:

- The site background and the history of previous activities at or concerning the site;
- The suspected contaminants, the types of contaminated media, and the reason for concern (for example, health effects, surrounding population, and migration of contamination); and
- The quality and types of data needed to characterize the site.

Review Health and Safety Requirements

The RPM and oversight assistant should review the PRP's health and safety plan (HSP) to become familiar with the health and safety procedures and protocols that will be used by the contractors at the site. The RPM and oversight assistant should pay particular attention to the following sections: the known or suspected contaminants at the site; and the suspected location and concentration of contaminants -- including the hazards associated with each contaminant (such as toxicity and health effects) and the action levels that would require upgrading personal protective equipment or abandoning the site. The oversight assistant should become familiar with the site emergency procedures, the type of protective equipment to be worn by field personnel during each activity, the location of the designated work areas and clean areas, the location of the nearest medical facility, and the procedures and equipment for monitoring the work area for potentially hazardous materials.

Detailed information on health and safety requirements for hazardous waste sites is found in EPA Order No. 1440.2, "Health and Safety Requirements of Employees Engaged in Field Activities" (U.S. EPA, 1981), and OSHA regulations in 29 CFR 1910.120 (see Federal Register 45654, December 19, 1986). More detailed guidance directed specifically at health and safety activities is described under the media-specific sampling technique sections of this manual.

Secure Oversight Tools

The tools needed to ensure effective oversight include both the equipment for collecting oversight samples and providing health and safety protection for field personnel, and the equipment for documenting site activities.

The equipment and materials needed to collect, contain, label, preserve, package, and ship the oversight samples is discussed in greater detail in the following sections:

- Sampling equipment for each medium to be sampled (Section B.2);
- Sample containers (Section B.3.1);
- Labels and tags (Section B.3.2);

- Preservative materials (Section B.3.3);
- Packaging and shipping materials (Sections B.4.1 and B.4.2);
- Quality review (Section B.5).

The oversight assistant should refer to the PRP's Work Plan schedule and the SAP to determine the specific equipment that will be needed for each day's activities. The required equipment is supplied by the oversight team itself, except for decontamination equipment (usually, the oversight team uses the PRP's equipment). The oversight assistant should contact the PRP to confirm this arrangement before going to the site. If the PRP is not willing to share decontamination equipment, the equipment should be secured by the oversight team.

The tools used for documenting the sampling and analysis field activities include the following (see Section B.6):

- Field Activity Report -- for assisting the oversight assistant in focusing on the key aspects of the sampling and analysis activities in terms of oversight, and for recording details of these activities;
- Field logbook -- for the RPM to record facts regarding the site conditions, field measurements, location and type of samples collected, and dates and times of sampling activities; and
- Photographic or video camera -- for obtaining a visual record of the site and sampling activities.

Coordinate with Personnel

Preparing for field oversight of sampling and analysis activities requires extensive coordination with all of the parties involved. These parties usually include:

- The PRP's primary representative to EPA;
- The PRP's field supervisor;
- The Federal, State, and local assistants (as identified by the RPM); and
- The oversight team's laboratory representative.

In many cases, other parties are involved, including the following:

- The PRP's contractor if other than field supervisor;
- The oversight team's contractor;
- The EPA coordinator for the Contract Laboratory Program (CLP); and
- The PRP's facility representative (if other than the PRP's primary representative).

The RPM or oversight assistant should communicate with the relevant parties (usually by telephone) on a regular basis regarding the planned activities at the site. It is especially important for the oversight assistant to obtain a

commitment from the laboratory that will analyze the split, duplicate, and blank samples (see Section B.5) several weeks in advance of the scheduled site activities. Laboratory scheduling is the most common obstacle in coordinating oversight activities. If the laboratory analysis is arranged through the CLP, the oversight assistant should contact the CLP coordinator at least 4 to 6 weeks before the planned sampling date. Arranging private laboratory services generally requires less notice, but still requires adequate planning.

B.1.2 Preliminary On-site Activities

Review Personnel Qualifications/Responsibilities

The RPM and oversight assistant should acquaint themselves with the names, responsibilities, and general qualifications of the personnel designated in the SAP. They should realize, however, that frequently the PRP's staffing plans change; personnel substitutions are routine and should not alarm the RPM or oversight assistant. If staffing changes are made, the oversight assistant should make a note in the field activity report and determine informally if the substitution seems reasonable (either by observing the individual's activities or by communicating with him/her). In making this determination, the oversight assistant should use his/her professional judgment, keeping in mind that the PRP has no incentive to send an unqualified individual to the field. The oversight assistant should not delay the PRP's activities to verify personnel substitutions. If the PRP has substituted an unqualified individual to perform field work, the oversight assistant should be able to tell by observing that individual as sampling activities proceed. In this case, the oversight assistant should notify the RPM.

Review Location and Number of Samples

The oversight assistant should be familiar with the planned location and number of samples designated in the SAP and should compare the plan with the actual number and location of samples collected in the field. The oversight assistant should not delay the PRP's activities to check compliance with the SAP; rather, the assistant should gather information by observing or conversing with the PRP briefly at the beginning of each day. If the field supervisor holds a briefing or safety meeting at the start of each day, this is a good time for the oversight assistant to gather information.

Frequently, sampling locations will be modified in the field, usually when access to a planned sampling location is obstructed by an unforeseen physical barrier. The oversight assistant should make a note in the field activity report of any changes in the sampling location and should use his/her judgment to evaluate whether the change is reasonable (see Section B.1.1). To make this evaluation, the oversight assistant should consider the objectives of the sampling and analysis activities, as described in the SAP. A change in sampling location that the oversight assistant feels might adversely affect the outcome of the sampling effort should first be discussed with the PRPs' field supervisor. If the disagreement cannot be resolved, inquiry should be made to the RPM at the first available moment.

Review Sampling Equipment

The oversight assistant should be familiar with the media and types of sampling equipment designated in the SAP and should compare the equipment at the site and the equipment that was designated in the SAP for each medium to be sampled. The oversight assistant should focus his/her attention on the major types of equipment, such as split spoon samplers for collecting undisturbed soil samples, bailers for collecting groundwater samples, or pumps

for purging monitoring wells before sampling. Details such as the size of bailers, the type of bailer wire, or the type of pump tubing during the preliminary on-site activities are generally of minor concern. The oversight assistant should refer to Section B.2 of this manual if there are any questions concerning the application and use of sampling equipment for each medium.

If the major equipment the PRP has at the site is different than designated in the SAP, the oversight assistant should refer to the detailed information for the media-specific sampling activities (Section B.2) to evaluate the validity of the equipment substitution. The oversight assistant should pay special attention to the sampling activities when the equipment is used. The oversight assistant should not delay the PRP's activities to determine if the equipment is acceptable. A discussion should be held with the field supervisor if the oversight assistant feels that the equipment is not acceptable for some reason. If the disagreement cannot be resolved, an inquiry should be made to the RPM at the first available moment.

Check Decontamination Area/ Clean Area

Layout of the decontamination and clean areas at the site should be one of the first activities that the PRP's contractors should perform before beginning sampling and analysis. Locations for these areas should be designated in the SAP. The oversight assistant should be familiar with the general location and configuration planned for these areas, and should check to see that the areas are placed according to the SAP.

Tour of Site

Before sample collection begins, the oversight assistant and his/her team should conduct a walking tour of the site. The walking tour serves two functions: 1) to familiarize oversight personnel with the site and the surrounding area (the oversight team should be sufficiently familiar with the site to find their way in the event of an emergency), and 2) to identify general background site conditions that might affect sampling activities or sample results.

The effect of background site conditions on the sampling activities and sample results varies with each sample medium and type of sample. Detailed information on the effects of background site conditions on sampling activities and sample results is provided for each sample medium in Sections B.2.1 through B.2.9. The oversight assistant should note any background site conditions that he/she observes during the walking tour and should pay special attention to these conditions affecting a particular area of sampling.

Calibration of Equipment

Field analytical equipment must be calibrated regularly in order to provide reliable measurements. The method and frequency of calibration vary with different instruments, but the sampling team should, at a minimum, calibrate equipment daily either upon arriving at the site or prior to its use. A calibration check after use or at day's end will determine any drift in instrument measurement. The oversight assistant should know what type of field analytical equipment will be used at the site and how often the equipment should be calibrated, as designated in the SAP.

B.2 MEDIA SPECIFIC SAMPLING ACTIVITIES

One of the primary functions of oversight is to verify that the PRPs' sampling team is complying with the requirements of the SAP, and that the samples are representative of the contaminated media. Collecting representative samples depends on proper sampling locations, equipment, and techniques as well as proper handling, preservation, labeling, and shipping.

This section discusses the sampling procedures that apply to specific sample media. The nine sample media discussed are: (1) surface water, (2) ground water, (3) soil water, (4) surface soil, (5) subsurface soil, (6) soil vapor, (7) sludge and slurry, (8) containerized wastes, and (9) ambient air. Each of these media are discussed in a separate subsection.

B.2.1 Surface Water

Surface water is generally characterized by one of four types of environments: (1) rivers, streams, and creeks; (2) lakes and ponds; (3) impoundments and lagoons; and (4) estuaries. Sediments are often sampled in conjunction with surface water, and are considered an integral part of the surface water environment since each type of surface water is in contact with sediments. Because surface waters can exhibit a wide range of general characteristics, such as size or flow, the collection technique must be adapted to site-specific conditions.

Sampling Locations

The oversight assistant should verify that the actual surface water sampling locations are consistent with those specified in the SAP. Surface water sampling locations will vary with the size of the water body and the amount of mixing (turbulence). For example, the number and location of samples needed to characterize river or stream contamination will differ greatly from the number and location of samples needed to characterize a lake. Best professional judgment should be utilized to evaluate whether changes in sampling locations are reasonable and consistent with the objectives of the sampling and analysis activities (see Section B.1.1). The oversight assistant should record sampling locations on a site map or drawing and compare actual sampling points and those specified in the SAP.

Rivers, Streams, and Creeks

To ensure representativeness, samples should be collected immediately downstream of a turbulent area, or downstream of any marked physical change in the stream channel (U.S. EPA, 1986c). In the absence of turbulent areas, the oversight assistant should verify that the sample location is clear of immediate point sources of pollution such as tributaries or industrial and municipal effluents. Samples should also be located roughly proportional to flow -- that is, closer together toward mid-channel, where most of the flow travels, than toward the banks, where the proportion of total flow is smaller.

Unless a stream is extremely turbulent, it is nearly impossible to measure the effect of an immediately upstream waste discharge or tributary. This is because the inflow of a liquid from an upstream waste frequently remains near the bank with little initial lateral mixing. Therefore, the oversight assistant should note if at least three locations between any two points of major change in a stream (such as waste discharge or tributary) are sampled to adequately represent the stream.

If the effect of a waste discharge or tributary on a water body is to be quantified, the oversight assistant should check that the samples are collected both upstream and downstream from the discharge or tributary. The sample location on a tributary should be as near its mouth as possible without collecting water from the main stream that may flow into the mouth of the tributary on either the surface or bottom (because of density differences due to temperature, dissolved salts, or turbidity).

When the sampling team collects several samples along a stream, the samples should be located at time-of-water-travel intervals; that is, the distance that the water travels in a given time period. A general rule of thumb is to collect a total of six samples at successive intervals that are one-half water-travel day apart (U.S. EPA, 1986c).

Typically, sediment deposits in streams collect most heavily in river bends, downstream of islands, and downstream of obstructions in the water. Generally, the oversight assistant should check if sediment samples are collected along a cross-section of a river or stream bed. A common practice is to sample at quarter points along the cross-section of the site. The sampling team should not take sediment samples immediately upstream or downstream from the confluence of two streams or rivers because of possible backflow and inadequate mixing.

Lakes and Ponds

Because of reduced (or no) flow, lakes and ponds have a much greater tendency to stratify than rivers and streams. The relative lack of mixing requires the sampling team to obtain more samples to represent present water conditions. For example, if stratification is caused by water temperature differences (such as cooler, heavier river water entering warmer lake water) the sampling team should sample each layer of the stratified water column separately. If a lake is in spring or fall overturn, vertical composites may not be necessary. Stratification can be determined with temperature, specific conductance, pH, and dissolved oxygen vertical profiles. The oversight assistant should check if the sampling team has made a vertical profile of the water column or used visual observation to detect different layers.

The number of water sampling locations on a lake or pond will vary with the size and shape of the basin as well as other factors such as discharges, tributaries, and land use characteristics that could affect water quality. In ponds, a single vertical composite at the deepest point may be representative. In naturally formed ponds, the deepest point is usually near the center. In lakes, the sampling team should take several vertical composite along a transect or grid to ensure the samples are representative (U.S. EPA, 1986c). However, vertical composites samples should not be collected for volatiles; separate grab samples at each composite point should be collected.

The oversight assistant should check if sediment samples in lakes, ponds, or reservoirs are collected approximately at the center of water mass where contaminated fines are most likely to collect. Generally, coarser-grained sediments are deposited near the headwaters of a reservoir, while bed sediments near the center of the water mass will be composed of fine-grained materials.

Impoundments and Lagoons

Impoundments and lagoons generally will contain more concentrated wastes than lakes and ponds, and thus be a source (as well as a sink) of contamination. In addition, impoundments and lagoons are more likely to contain sludges as opposed to sediments (for information on sludge sampling, see Section B.2.7).

As with lakes and ponds, the number of water sampling locations for impoundments and lagoons will vary with the size and shape of the impoundment or lagoon as well as other factors such as the location and flow characteristics of inlets and discharges. In small impoundments, a single vertical composite at the deepest point may be representative; the deepest point is usually near the dam. In larger impoundments, the sampling team should take several vertical composites along a transect or grid to ensure samples are representative (U.S. EPA, 1986c).

Estuaries

Due to the dynamics of estuaries, preplanned sampling locations typically must be changed after initial sampling. (Initial sampling may only test assumptions regarding sample locations). In addition, because estuary dynamics cannot normally be determined by a single-season study, estuary sampling is usually two-phased, conducted during wet and dry seasons.

The oversight assistant should note if samples in estuaries are collected at mid-depth where depths are less than 10 feet, unless the salinity profile indicates the presence of a halocline (salinity stratification). In that case, the sampling team should collect samples from each stratum. For depths greater than 10 feet, the sampling team may collect water samples at 1-foot depth, mid-depth, or 1 foot from the bottom. Sampling in estuaries is normally based on tidal phases, with sampling on successive slack (low flow) tides.

Biota

Biota sampling may occur when questions exist about the presence or absence of measurable impacts both onsite and offsite or to assist in preparing an ecological assessment. In surface waters, biota are often sampled incidentally to water or sediment sampling. In other media, or for bioassays, specific equipment and detailed project plans are employed. Biota sampling can help better determine the effect of contaminants on natural systems, either directly or through food-chain accumulation.

General Surface Water Conditions

The oversight assistant should note the general conditions of the water body (and sediments). Water turbidity and turbulence are of particular interest for obtaining representative surface water samples. (Turbulence affects mixing, while turbidity is an indication of sediment/water mixing). In addition, the oversight assistant should observe the water to detect the presence of any stratification (layers) or the presence of petroleum products or surface sheen.

The oversight assistant should also document other conditions which could affect sampling activities or sample quality. These conditions include the presence and relative locations of any discharges or tributaries, any obstructions or islands, and any change in channel width or direction as well as weather conditions. Refer to the general site conditions paragraphs of Section B.2 for more detail and additional considerations.

Sampling Equipment

Generally, any sampling equipment that preserves the integrity of the sample, and produces a sample that is representative of the sample location, is acceptable. The oversight assistant, however, should note if the sampling team's equipment is consistent with the equipment listed in the SAP. To reduce the possibility of cross-contamination, the sampling team should collect samples with glass, plastic, or Teflon-coated samplers for trace metals analysis. Likewise, stainless steel, glass, or Teflon samplers are used to collect samples for trace organic compounds analysis.

Water Sampling Equipment

For sampling at a specific depth, the sampling team may use a standard Kemmerer or Van Dorn sampler (U.S. EPA, 1987a). The Kemmerer sampler (Figure B-1) is a brass cylinder with rubber stoppers that leave the ends open while the cylinder is being lowered in a vertical position to allow free passage of water through the cylinder. The Van Dorn sampler (Figure B-1) is similar to the Kemmerer, but is plastic and is lowered in a horizontal position. The oversight assistant should check whether the sampling team uses the Kemmerer metallic sampler for trace organic compounds or the plastic Van Dorn sampler for trace metals (some Van Dorn samplers are Teflon-coated and therefore can be used for both organic compounds and metals).

When using a Kemmerer or Van Dorn sampler, the sampling team sends a 5-ounce messenger (weight) down the rope, or activates an electrical solenoid when the sampler reaches the designated depth, causing the stoppers to close the cylinder. The sample is raised and removed through a valve to fill sample bottles.

The sampling team may also use modifications of the basic Kemmerer and Van Dorn samplers. Two of these are the Nansen Bottle and the Niskin Bottle. The Nansen Bottle, available in a 1.5-liter size, consists of a brass tube with rotary valves at each end. The Niskin Bottle sampler is available in sizes ranging from 1.7 to 30 liters and is designed primarily for deep-water sampling.

As with the Kemmerer, the Nansen bottle is lowered with the valves open. A messenger weight releases a catch mechanism, allowing the bottle to invert, and closing the valves. The Niskin Bottle, unlike the Kemmerer, can be opened and closed at any depth. This allows the bottle to penetrate surface contamination (such as oil slicks) with minimal risk of contaminating the internal sample area.

Another type of sampler (U.S. EPA, 1987a) is the weighted-bottle sampler (Figure B-2). When using the weighted-bottle sampler, the sampling team lowers the samples to the desired depth and pulls the stopper, allowing the bottle to fill. Unlike the Kemmerer, the bottle is raised uncapped, allowing the sample to mix with water from other depths.

The sampling team may also use small peristaltic pumps to sample surface water (Figure B-2). With peristaltic pumps, the sample is drawn through heavy-wall Teflon tubing and pumped directly into the sample container (U.S. EPA, 1987a). This method permits sampling from a specific depth or sweeping the width of narrow streams. These pumps should not be used for sampling volatile organics or oil and grease; volatile stripping can occur and oil and grease can adhere to the tubing.

Figure B-1. Common Surface Water Samplers

Kemmerer Sampler

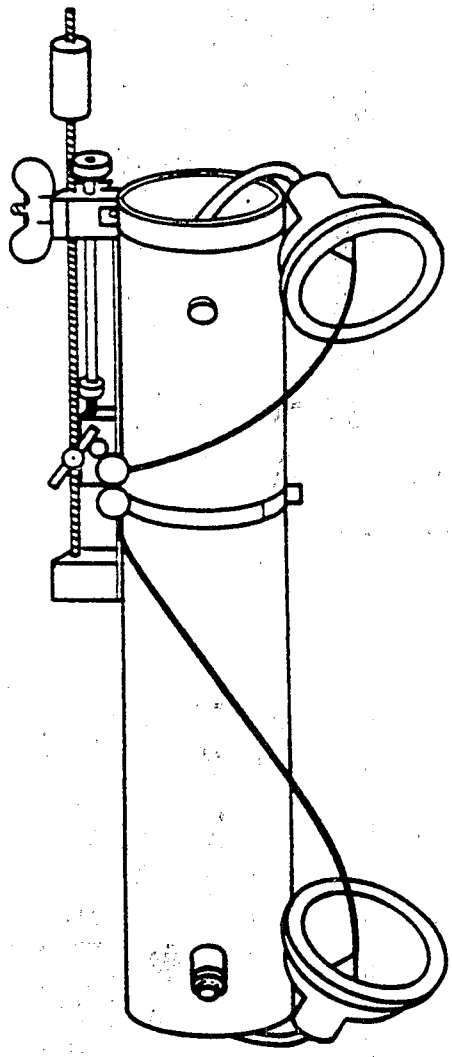

Van Dorn Sampler

Figure B-2. Common Surface Water Samplers

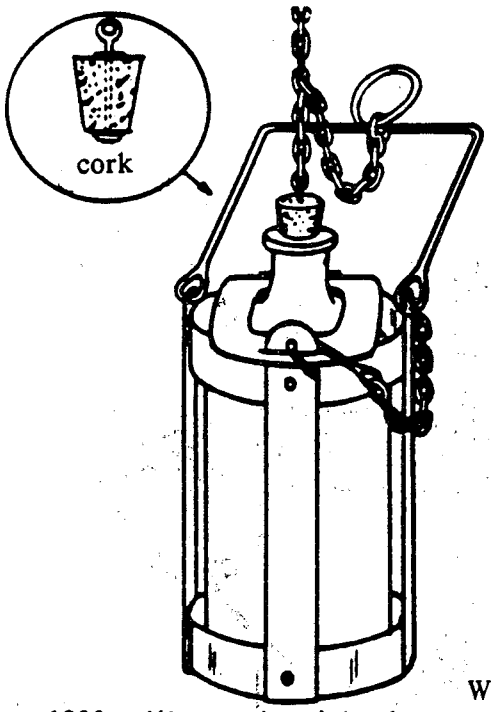

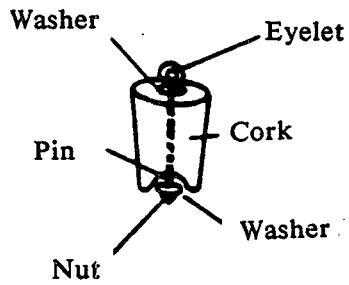

Weighted Bottle Sampler

1000-ml(1-quart) weighted-bottle catcher

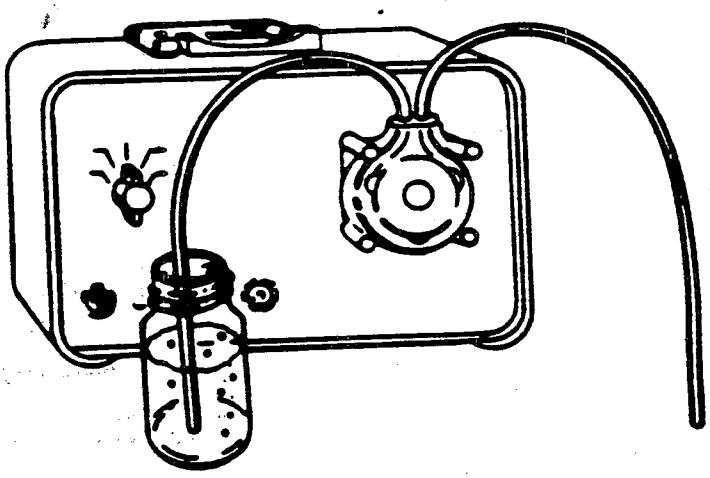

Peristaltic Pump

The sampling team may use a sampling device resembling a dust pan to sample an immiscible floating phase (for example, petroleum). The device has a large, shallow surface area that skims the water surface more readily than a cup with a smaller, deeper surface area. Alternatively, the sampling team can use an absorbent boom or roll to gather the floating material into a deeper pool for sampling directly, or absorb the material to be wrung into sample containers.

Sediment Sampling Equipment

To collect a sediment sample, the sampling team will generally use one of three methods: dredging, coring, or scooping.

Dredging

For routine analyses, the Peterson dredge is preferable when the surface water bed is rocky, very deep, or when the stream velocity is high (U.S. EPA, 1986c). The Eckman dredge has only limited usefulness. It performs well where bottom material is unusually soft, as when covered with organic sludge or light mud. It is unsuitable, however, for sandy, rocky, and hard bottoms and is too light for use in streams with high velocities.

The Ponar dredge is one of the most effective samplers for general use on all types of substrate. The Ponar dredge (Figure B-3) is a modification of the Peterson dredge and is similar in size and weight. It has been modified by the addition of side plates and a screen on the top of the sample compartment. The screen over the sample compartment permits water to pass through the sampler as it descends, thus reducing the "shock wave" created by the descent of the dredge into the sediment.

Coring

If a historical analysis of sediment deposition is desired, the sampling team may use core samplers to sample vertical columns of sediment. Core samplers are better than dredges for this type of analysis because they preserve the sequential layering of the deposit. The sampling team may use different types of coring devices depending on the depth of water from which the sample is to be obtained, the nature of the bottom material, and the length of core to be collected. These coring devices vary from hand push tubes (Figure B-3) to weight- or gravity-driven devices. To reduce sample contamination, the sampling team should use glass or Teflon core liners. With core liners, the samples are easily delivered to the lab for analysis in the tube in which they were collected. The disadvantage of coring devices is that a relatively small surface area and sample size is obtained, therefore requiring additional sampling by the sampling team to obtain the required amount for analysis.

The oversight assistant should check if the coring tube is long enough and has the proper diameter to ensure a representative sample. The sampling team should use a coring tube that is approximately 12 inches long if recently deposited sediments (8 inches or less) are needed. Longer tubes should be used when the sediments exceed 8 inches in thickness (U.S. EPA, 1986c). Because coarse or unconsolidated sediments such as sands and gravel tend to fall out of the tube, the sampling team should use a tube with a small diameter (a tube about 2 inches in diameter is usually the best size). Since soft or semi-consolidated sediments adhere more readily to the inside of the tube, the sampling team may use larger diameter tubes for mud or clay. The wall thickness of the tube should be about 1/3 inch for either Teflon or glass. The inside wall may be filed down at the bottom of the tube to more easily pierce the substrate.

Figure B-3. Common Sediment Samplers

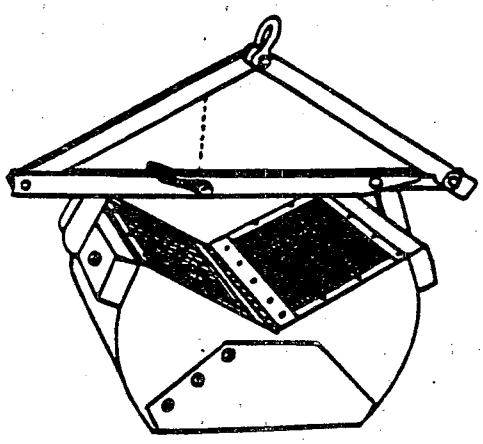

Ponar Dredge

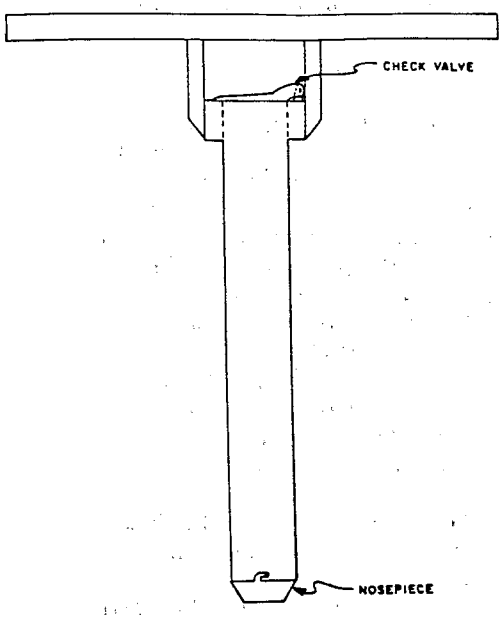

Hand Push Tube

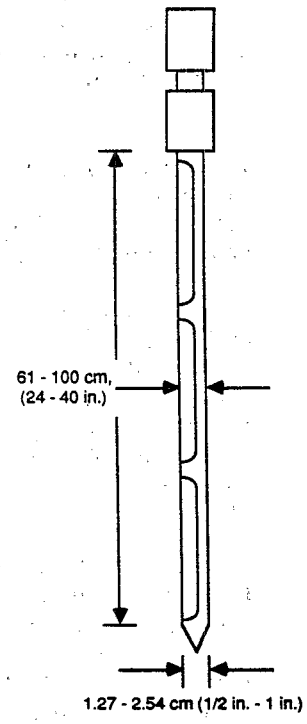

Grain Sampler

Scooping

If the stream has a significant flow and is too deep to wade, the sampling team may scoop some sediment with a BMH-60 sampler (U.S. EPA, 1986c). The BMH-60 is not particularly efficient in mud or other soft substrates because its weight will cause penetration to deeper sediments, which may not be desired. The sampling team may use the BMH-60 for sampling if subsamples that have not been in contact with the metal walls of the sampler are taken.

Sample Type

There are two types of surface water samples that may be collected: a grab sample and a composite sample. **Grab** samples are taken at a single location. It may be necessary to collect material from a location in successive "grabs" to accumulate the required amount of sample; the sample is still, however, a grab sample. **Composite** samples are combined from different locations, or from different times. A continuous sample would also be a composite sample. For example, grab samples combined from 1 foot below the water surface, at mid-depth, and 1 foot above the bottom would constitute a vertical composite. A peristaltic pump collecting water from mid-depth at the center of a stream channel over a period of time would yield a time composite sample. Generally, water samples with different temperatures or conductivities, may be composited (U.S. EPA, 1986c) as these properties (as opposed to composition) are subject to change once the sample has been collected. Sediment samples of dissimilar composition or samples collected for volatile organic analysis should not be composited, but instead stored for separate analysis.

The size of the sample collected is determined by the requirements for analysis, and is specified in the SAP. For example, water samples analyzed for purgeable organic compounds should be stored in 40 mL septum vials with no head space (air) remaining. Sediment samples for purgeable organic compounds analysis should completely fill a 4-ounce (120 mL) sample container; again, no head space should remain in the sample containers. For trace organic compounds and metals, 4 to 8 ounces (120-240 mL) of sample are usually collected.

The SAP should specify the order in which samples should be collected. Generally, samples should be collected in the order of decreasing volatility; volatile contaminants should be sampled before nonvolatile contaminants (U.S. EPA, 1986a). A preferred collection order would be:

- Volatile organics;
- Purgeable organics (generally not volatile at ambient conditions);
- Total organics;
- Metals;
- Phenols;
- Cyanide; and
- Metal anions (for example, sulfate, chloride, nitrate).

Sampling Technique

The oversight assistant should be aware of other factors, such as water velocity and accessibility, that may affect sampler selection and technique. For example, the sampling team should collect surface water samples from the shore of the water body (possibly with an extension pole), a small boat, a pier, or by wading in streams. Wading, however can cause bottom deposits to rise and bias the sample. For this reason wading is not acceptable for lakes and streams without a noticeable current. When wading, sampling personnel should face upstream and collect the sample with the container pointing upstream. Likewise, when sampling beneath the water surface, care should be taken not to stir up the bottom sediment and thus bias the sample.

The sampling team can collect water samples from shallow depths by submerging the sample container directly into the water. Alternatively, they can use a bucket or dedicated collection vessel (bailer, beaker, or other sampler) to transfer the water sample to a container. However, when a transfer vessel is used, the sampling team should avoid aeration and loss of volatile organic compounds. The team should also not disturb the bottom sediment and should decontaminate the transfer vessel between sample locations.

For deeper samples, the sampling team should attach a rope to the dedicated sampler. The oversight assistant should note if the sampling team uses either a nylon rope or Teflon-coated wire to lower all samplers into the water; other rope/cable materials may introduce contaminants. The rope should be properly discarded or decontaminated between sampling locations.

When sampling from highly contaminated surface water (for example, from a surface impoundment) the sampling team should take care to minimize splash hazards which could spread contamination as well as result in unintended exposure. Similarly, if the sampling team will be collecting extremely contaminated sediment, preliminary decontamination may be necessary before leaving the sampling location. Typically, this will involve placing contaminated boots and sampling equipment into plastic bags for transfer to the decontamination area. This will prevent spread of contamination. As noted in Section B.4.3, full decontamination is not done in locations adjacent to surface water where runoff to the water can occur.

Field Analytical Techniques

Field analytical techniques for screening surface water (and ground water) can be broadly outlined in six categories:

- pH meters;
- Conductivity meters;
- Thermometers;
- Dissolved oxygen meters;
- Inorganic compounds kits/instruments; and
- Organic compounds instruments.

Except for self-purging instruments (for example, gas chromatographs), the oversight assistant should note whether the sampling team decontaminates the analytical equipment between samples to avoid cross contamination.

pH Meters

The sampling team can obtain the pH of a water sample from either a pH meter or calorimetric pH paper (U.S. EPA, 1986c, 1976b). The oversight assistant should verify that the pH meter is calibrated, at a minimum, on a daily basis to standard solutions and to temperature (if the pH meter does not have temperature compensation capability). If calorimetric pH paper is used, the oversight assistant should note the shelf-life expiration.

The sampling team obtains the pH of a sample by immersing the (clean) pH meter electrode in the water sample and reading the instrument display. The oversight assistant should note the presence of oily material or particulate matter, since this material or matter can impair electrode response. If the sampling team uses pH paper, a drop of water should be put on the paper since immersing pH paper will contaminate the sample.

Conductivity Meters

Conductivity is a function of the number of ions in solution, and is therefore a relative indication of water contamination. The sampling team should calibrate a conductivity meter against a test solution of known conductivity before use. Because surface waters contain many natural salts, the sampling team should compare field measurements to an upgradient or uncontaminated baseline. Because conductivity is also a function of temperature, the sampling team should measure samples at the same temperature, or should use a temperature-compensating instrument.

Thermometers

The sampling team can measure water temperature with any high-quality mercury-filled thermometer or thermistor with an analog or digital readout device (U.S. EPA, 1986c). Although it is not necessary to calibrate on a daily basis, thermometers should be periodically calibrated against a National Institute of Science and Technology (NIST) traceable standard thermometer. The sampling team should insert the (clean) thermometer in situ when possible, or into a collected sample. The oversight assistant should check that the sampling team allows the temperature to equilibrate before taking the reading.

Dissolved Oxygen Meters

The sampling team can measure dissolved oxygen content in water samples with a dissolved oxygen meter or with the Winkler method (U.S. EPA, 1986c). The meter measures dissolved oxygen content directly upon immersion of the probe, whereas the Winkler method is a titration involving five reagents. The sampling team should calibrate the dissolved oxygen meter against the Winkler method before use on samples free of interferences, or otherwise according to manufacturer's instructions. Since temperature affects dissolved oxygen readings, the oversight assistant should check if the sampling team's meter is equipped with a temperature compensator. Dissolved oxygen probe performance is also affected by dissolved inorganic salts and by reactive gases such as chlorine and hydrogen sulfide.

Inorganic Compound Kits/Instruments

Various field test kits and instrumentation exist for field analysis of inorganic compounds (U.S. EPA, 1987a). The kits are calorimetric tests that require the sampling team to add reagents to a portion of the sample. To obtain the results, the sampling team compares the sample with a color chart or uses a spectrophotometer, colorimeter, or other instrument that will measure color

intensity. If the sampling team uses a field atomic absorption spectrometer, the oversight assistant should check if the operator has been trained to avoid interference and contamination problems.

Organic Compound Instruments

Although there are many organic compound instruments that the sampling and analysis team may operate in a van, trailer, or building, the oversight assistant will generally encounter portable instruments (U.S. EPA, 1987a, 1987b). The most easily portable units are battery-powered gas chromatographs (GCs). There are also mass spectrometers (MS) and combination GC/MS units which require 120 volts of AC power, either from regular utility lines or from generators.

Generally, the battery-powered GCs are suitable only for detecting volatile compounds. The AC-powered units can detect semi-volatiles, and can be temperature programmed or can have capillary column capability, both of which considerably enhance GC selectivity. The oversight assistant should be aware that effective use of these analytical instruments requires a high level of operator experience and expertise. The oversight assistant should note the type of equipment that the sampling team uses and the experience of the operator(s).

B.2.2 Ground Water

Ground water is usually defined as the water present in the saturated soil zone -- that is, the subsurface soil zone in which the pore space between the soil grains (or rock fractures) is filled with water. Although water is present in the unsaturated zone in the form of films and vapors, it is often referred to as soil water in this case and is distinct from saturated ground water (U.S. EPA, 1987a). This is an important distinction because the techniques for well installation and sampling differ significantly between ground water and soil water.

Well Location/ Condition

The sampling team will typically sample ground water through an in-place well that is either temporarily (if approved) or permanently installed. However, the team may also sample ground water anywhere it is present, such as in a pit or hole dug to the water table (U.S. EPA, 1986c).

The oversight assistant should check if the actual sampling locations are consistent with those specified in the SAP. However, site-specific conditions may require modifications in well location. The oversight assistant should rely on best professional judgment to evaluate whether changes in well locations are reasonable and consistent with the objectives of the SAP (see Section B.1.1). The oversight assistant should note the location of all wells in the field log and on a map. A comparison of the actual well locations and the intended locations should be noted.

The oversight assistant should also check that the well is covered by a locked protective casing. The protective casing should be set in grout or concrete to prevent its movement. The well casing should be capped to prevent foreign matter from entering the well.

Well Design

Monitoring well casings are available in a wide range of sizes and are made of various materials. Both the size of casing and the type of casing material are critical factors for sampling and analysis.

The oversight assistant should note the diameter of the casing (well diameter) because of its effect on measurement of immiscible fluids in the well. The measured thickness of immiscible hydrocarbons in a well is greater than the actual thickness of the immiscible lens floating on the water table. The lens in a small diameter well (for example, 2-inch diameter) will be approximately 4 times thicker than on the water table (U.S. EPA, 1987b).

The oversight assistant should also note the type of casing material because of its effect on the quality of the water samples. The casing material may both release and absorb water contaminants. Some organic compounds and acids react aggressively with casing materials and actually destroy well integrity. When selecting an appropriate casing material, the sampling team should consider the type of contaminant being investigated. Polyvinylchloride (PVC) pipe is acceptable for samples for trace metals analysis, but may not be acceptable for trace organic analysis because it has been shown to release and absorb trace amounts of various organic constituents. Stainless steel is acceptable for trace organics but may not be acceptable for trace metals. Fiberglass-reinforced plastic has recently been used for trace organics because it does not absorb or release contaminants as much as PVC does.

General Ground Water Conditions

The general conditions of the ground water are important for sample quality. The oversight assistant should note if the sampling team checks the depth to standing water, the depth to the bottom of the well, the presence of an immiscible layer, and the turbidity of the water (although turbidity cannot be detected until the water is sampled). Measuring the water depth in a well is important to characterize the aquifer and to determine the volume of water that should be purged (removed) from the well before sampling. Measurements to determine the depths should be made with respect to a surveyed reference point(s) instead of the top of the casing. Measuring the depths in this manner, however, is more important for characterizing the aquifer than purging the well. The sampling team may measure depth to standing water and depth to the bottom of the well with any of several measuring devices. The oversight assistant should note if the sampling team uses chalked steel tape, electric sounders, poppers, or some other method. Chalked steel tape with a weight attached to the lower end is one of the most accurate procedures for measuring water levels. The line where the chalk color changes on the tape indicates the length of tape that was immersed in water. Electric sounders may also be used to measure the depth to water in wells. Most sounders are powered with flashlight batteries, and immersing the sounder in water closes the circuit and registers on a meter or sounds a buzzer. A popper -- a metal cylinder with a concave undersurface attached to a steel tape -- is another method for measuring the depth to the water. When the popper is dropped to hit the water surface, it makes a distinctive "pop." Poppers are not effective if the water surface is in contact with the well screen, or if there is significant background noise (such as pump operation).

The sampling team may determine the presence of a nonaqueous-phase hydrocarbon lens floating on the water table or pooled at the bottom of the aquifer by using hydrocarbon-detection pastes, bailers, or interface probes. Hydrocarbon-detection pastes change color when contacted by hydrocarbons, but do not change in water. The paste is applied to a rod or tape and lowered

into the well until it comes into contact with the water. The rod or tape is then withdrawn from the well. A color change indicates that a body of nonaqueous-phase hydrocarbon is present. Although this method can detect a layer of hydrocarbon less than 1-mm thick, it does not permit direct measurement of the thickness of the layer. The sampling team can use a bailer to measure the thickness of the layer.

Sampling Equipment

Generally, any sampling equipment that preserves the integrity of the sample and produces a sample that is representative of the sample location is acceptable. The most common methods involve either bailing or pumping. The oversight assistant should note if the sampling team's equipment is consistent with the equipment listed in the SAP.

Bailers

Bailers are divided into three groups: (1) top-filling, (2) bottom-filling, and (3) thief. The sampling team may use a thief bailer to collect a sample from a particular zone. The thief bailer (for example, a Kemmerer bottle; see Figure B-1) has check valves or mechanical stops on each end.

Because the top-filling bailer is open only at the top, the oversight assistant should check that it is completely submerged to permit filling. The oversight assistant should also note if the sampling team is trying to determine the presence of a nonaqueous-phase liquid. It may be difficult to identify nonaqueous-phase liquids with a top-filling bailer because the bubbling action caused by the water filling the bailer may emulsify the two liquid phases (U.S. EPA, 1987b).

The bottom-filling bailer (Figure B-4) has a one-way check valve at the bottom and an open top. As the bailer is lowered, it fills from the bottom. The oversight assistant should make sure the bailer is lowered slowly for nonaqueous-phase layers, so that they can be easily identified and separated for analysis.

As a thief bailer is lowered, water and nonaqueous-phase liquids can flow completely through the bailer. When the desired collection level is reached, the stops can be closed, or the check valves will be activated when the bailer is drawn up.

In general, the sampling team should use plastic or Teflon-coated bailers to collect samples for trace metals analysis, and stainless steel or teflon-coated bailers to collect samples for trace organic compounds analysis. (Contaminant leaching from the bailer is generally infinitesimal except under aggressive and extremely contaminated conditions, such as nonaqueous-phase layers for plastic and low pH combined with nitrates for stainless steel. Thus, either material may be acceptable for collecting for both organic compounds and metals analysis depending on concentraction and constituents of concern.)

Pumps

The sampling team may use a variety of pumps for sampling ground water. Pumps are classified as (1) suction-lift, (2) submersible, (3) air-lift, (4) bladder, or (5) gas-driven piston. These pumps are discussed below. Regardless of the type, the oversight assistant should check that the pumps used for purging the well are not used for sampling without decontamination (U.S. EPA, 1987a).

Figure B-4. Ground-Water Samplers

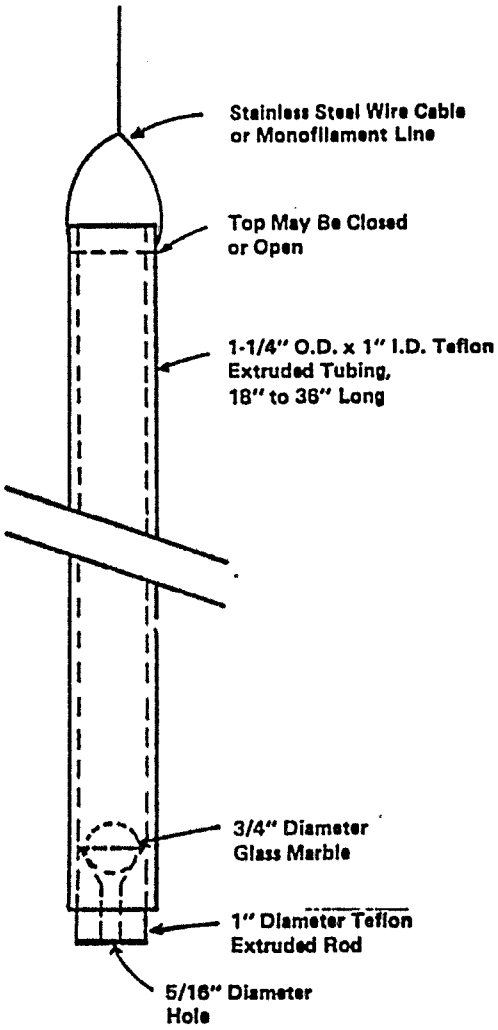

Bottom-filling Baler

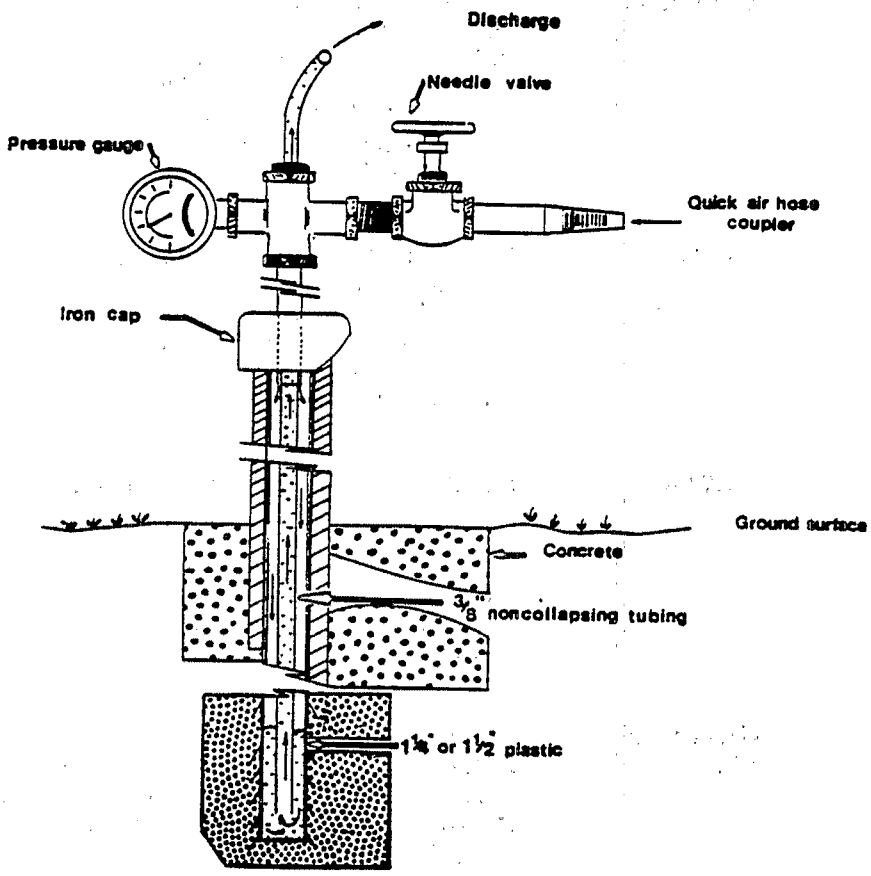

Air-lift Pump

Suction-lift

Suction-lift pumps include centrifugal pumps, hand-operated diaphragm pumps, and peristaltic pumps. The sample is drawn into and up the pump discharge line by the repeated creation of a partial vacuum in the pump. The oversight assistant should be aware that suction pumps generally are not practical at surface depths greater than 25 feet and suction pumps are not suitable for sampling for purgeable organic compounds since suction can strip volatile compounds.

Submersible

The sampling team may use submersible pumps to depths of several hundred feet. The sample is brought into the pump by a series of impellers or blades, and is forced to the surface as more fluid is brought into the pump. The oversight assistant should be aware that submersible pumps are difficult to transport and decontaminate, and may emulsify any nonaqueous-phase liquids and volatilize dissolved organic compounds. They are therefore generally better suited for purging than for sampling.

Airlift

The sampling team will rarely use air-lift pumps since significant oxidation, emulsification, and degassing may occur. Air-lift pumps also are not suitable for pH-sensitive parameters such as metals. Air-lift pumps (Figure B-4) use air pressure to force samples into and up the discharge tube. The air pressure can be generated by hand, but a small air compressor is more commonly used for this purpose.

Bladder

Bladder pumps may be used in wells as small as 2 inches in diameter and are acceptable for the sampling of all contaminants (although they are difficult to properly decontaminate). Bladder pumps consist of a collapsible membrane inside a rigid housing. Compressed gas (which does not come in contact with the sample) is used to inflate or deflate the collapsible membrane (bladder) from the outside. This draws the sample into the bladder and forces it to the surface.

Gas-driven piston

In small-diameter wells, the sampling team may also use recently developed piston pumps. Compressed gas is used to activate the pistons to bring the sample into the pump. The sample is pumped without coming in contact with the gas. Although these devices can pump to depths in excess of 500 meters, pumping rates are low.

Sample Type

As with surface water, there are two types of samples that may be collected: a grab sample or a composite sample (see Section B.2.1).

Generally, ground water samples are grab samples, although separate samples could be composited. Alternatively, ground water may be sampled continuously as in a ground water recovery or treatment system. The size of the sample collected is determined by the requirements for analysis, and is specified in the SAP. For example, water samples analyzed for purgeable organic compounds should be stored in 40 mL septum vials with no head space (air) remaining. Water samples for metals or cyanide analysis may fill a 16-ounce or 1-liter bottle. Larger amounts of water (up to 4 liters) may be collected for low-concentration water samples that are analyzed for extractable organics.

The SAP should specify the order in which samples should be collected. Generally, samples should be collected in the order of decreasing volatility; volatile contaminants should be sampled before nonvolatile contaminants (U.S. EPA, 1986a). See Section B.2.1 for a preferred collection order of contaminants.

When sampling with bailers, the bailer is lowered into the well on a clean nylon rope or Teflon-coated cable and permitted to fill with ground water. If the sampling team is collecting organic samples, the bailer should be lowered so that it does not enter the water with a splash. Splashing or agitating the water can strip volatile compounds and stir up collected sediment.

Before taking samples, the sampling team must purge wells to remove stagnant water which has been standing in the well casing and may not be representative of aquifer conditions. The sampling team may purge wells with either an appropriate pump (depending on well depth) or a bailer. The equipment used to purge the well should be inert and compatible with the study objectives. The specific purging procedures should be described in the SAP.

The standard method of purging is to pump the well until three to five times the volume of standing water in the well has been removed. The sampling team may also pump the well until the specific conductance, temperature, and pH of the ground water stabilizes (U.S. EPA, 1987a). Alternatively, a combination of the two methods can be used. The oversight assistant should be aware that pumping a well dry also constitutes an adequate purge and the well can be sampled following well recovery (U.S. EPA, 1986c), although the purge rate should be reduced, if possible, to remove the necessary volume of water.

The sampling team must know the volume of the water in the well before the team can properly purge the well. (The volume of water in the well may fluctuate with the season and the weather.) The oversight assistant should note the volume that is purged from each well; the purged volume should correspond to the observed well water volume.

The oversight assistant should check that the sampling team lowers the pump/hose assembly or bailer into the top of the standing water column (not deep into the column). This is done so that the purging will draw water from the ground-water formation into the screened area of the well and up through the casing so that the entire static volume can be removed (U.S. EPA, 1986c). If the sampling team places the pump or bailer deep into the water column, the water above the pump or bailer may not be removed, and the subsequent samples collected may not be representative of the ground water.

Regardless of which method is used for purging, the sampling team should place new aluminum foil or plastic sheeting on the ground surface beside the well to prevent additional contamination. The sampling team should keep any hoses that come into contact with the ground water on a spool to further minimize contamination during transport (U.S. EPA, 1986c).

The oversight assistant should note the time between the well purging and sample collection. The sampling team should collect samples as soon as a volume of water sufficient for the intended analytical purpose reenters the well. Exposing the water entering the well for periods longer than 2 to 3 hours may result in unrepresentative samples.

When sampling from a ground-water well, the sampling team should exercise caution when first uncapping the well -- particularly if the well is unvented. This is because contaminant gases may have collected in the well. Moreover, if the water table has risen since capping an unvented well, the air space above the well will be pressurized.

Once the well is uncapped, the sampling team should check the ambient air around the well for the presence of hazardous vapors with an air monitoring instrument before purging or sampling. The sampling team should approach the well from the upwind side. Based on this initial hazard assessment, it may be necessary to don more/better protective equipment, or even evacuate. The oversight assistant should consult the site health and safety plan(s) for the appropriate action levels before arriving at the site. In addition, if hazardous atmospheres are encountered, the sampling team should try to identify the gases/vapors, and verify that the site health and safety plan has specified applicable and appropriate contingencies.

Field Analytical Techniques

Field analytical techniques for screening ground water (and surface water) can be broadly outlined in six categories:

- pH meters;
- Conductivity meters;
- Thermometers;
- Dissolved oxygen meters;
- Inorganic compounds kits/instruments; and
- Organic compounds instruments.

These instruments are discussed in detail in Section B.2.1, Surface Water Sampling. Except for self-purging instruments (for example, gas chromatographs), the oversight assistant should check that the sampling team decontaminates the analytical equipment between samples to avoid cross-contamination.

B.2.3 Soil Water

Water present in the unsaturated (vadose) zone in the form of films and vapors is often referred to as soil water (U.S. EPA, 1987a). Most hydrogeology texts distinguish between water near the surface and water in deeper unsaturated zones by the fact that water near the surface (so-called soil water) is subject to evaporation and plant transpiration, as well as to climatic effects. However, for the purposes of oversight, this guidance will refer to all water in the unsaturated/vadose zone as soil water because the sampling equipment and techniques for the entire vadose zone are essentially the same.

Figure B-5 shows a hypothetical cross section of the subsurface, illustrating the vadose and saturated zones. The term vadose zone (or zone of aeration) is preferred to the term unsaturated zone because saturated conditions are frequently encountered above the saturated zone in response to surface flooding (Everett, et.al., 1984). The principal transport mechanisms of soil water in the vadose zone are infiltration, percolation, redistribution, and evaporation.

Sampling Locations

As water in the vadose zone does not exist in a saturated state, wells and open cavities (such as test pits) cannot be used to collect soil-water samples. The sampling team samples soil water from either a temporarily (if approved) or permanently installed emplacement hole. An emplacement hole is distinct from a well and is a hole for installation of a soil-water sampler. The oversight assistant should be aware that in addition to sampling soil water directly, there are a number of indirect methods, such as electrical resistance blocks, for detecting fluid flow in the vadose zone. However, these methods provide only qualitative evidence of contamination, producing no actual sample for analysis. These methods therefore will not be examined in this guidance.

The oversight assistant should note the location of all emplacement holes in the field log and on a map, comparing actual locations with intended locations. The oversight assistant should also check to see if the actual sampling locations are consistent with those specified in the SAP. The oversight assistant should be aware, however, that site-specific conditions may require modifications in sampling locations. For example, an obstruction may necessitate moving a sampling location. The oversight assistant's best professional judgment should be used in evaluating whether changes in emplacement location are "reasonable and consistent" with the objectives of the SAP (see Section B.1.1).

General Soil Conditions

General soil conditions are important for obtaining representative soil-water samples. Soil texture (or particle size) affects operation of soil-water samplers. For example, when divisions of subsurface water soils are very coarse, such as when gravels are present, good contact between the finer pores and the sampler may be difficult to produce (for this reason, the space between the soil-water sampler and the surrounding soil is usually filled with silica flour -- a transmissive material). Thus, particle size distribution may affect sample representativeness.

Soil structure (referring to the arrangement of textural units) affects the flow of soil water (Everett, 1984). Well-structured soil, or soil containing fractures or cavities, allows soil water to flow rapidly through interconnected soil pores or conducting channels. Because soil-water samplers collect water from the finer (smaller) soil pores, the resultant samples may not be representative of bulk flow. Consequently, soil-water samplers may be inappropriate in well-structured soil for determining the quality of water flowing to the water table.

If determined by a sampling team geologist, the oversight assistant should record soil type and particle size. The oversight assistant should also record visible stains, dark residues, or dead or stressed vegetation, indicating possible soil contamination.

Figure B-5. Divisions of Subsurface Water

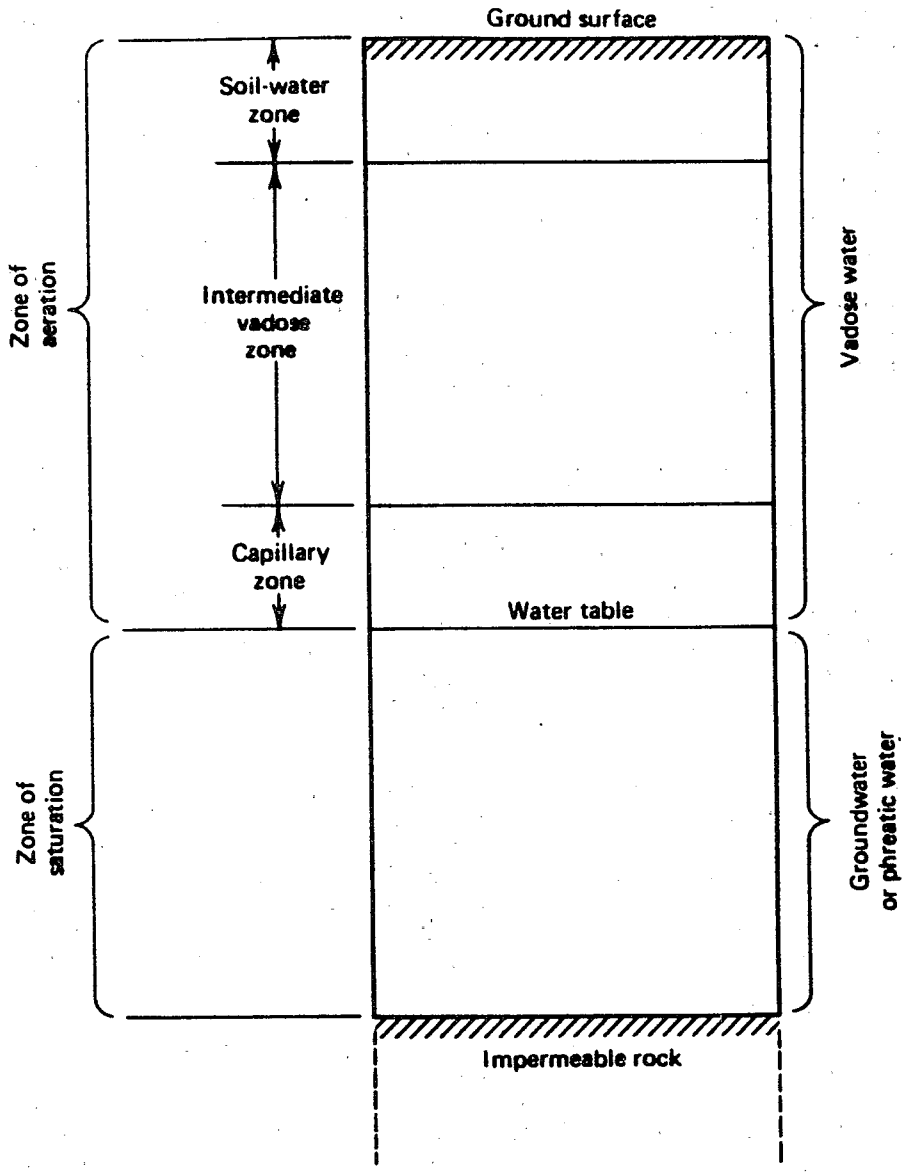

Sampling Equipment

Soil-water samplers that collect soil-water flows in the vadose zone under suction (negative pressures) are called suction samplers (Wilson, 1980). The most common of these suction soil-water samplers involve either ceramic-type samplers, such as lysimeters or filter candles, or cellulose-acetate filters. These are described in more detail below. The oversight assistant should note whether the sampling team equipment is consistent with the equipment listed in the SAP.

Sampling units employing filter candles (also described as "vacuum extractors") are installed in troughs below plant roots to sample irrigation return flow. They are generally of little use at hazardous waste sites. In addition, cellulose-acetate hollow fibers are likewise generally not useful for hazardous waste field studies, but are more suited to laboratory studies (Wilson, 1980). Porous cup lysimeters and membrane filter samples are the most common soil-water samplers at hazardous waste sites.

Lysimeters

Lysimeters uses a porous ceramic cup to collect soil water. When in contact with the soil, soil water in the pore space is free to move into and equilibrate with the pores in the ceramic cup. By drawing a vacuum on the inside of the porous cup, soil water flows into the cup for collection.

There are three types of lysimeters: (1) vacuum-operated, (2) vacuum-pressure, and (3) vacuum-pressure with check valves. Each type essentially consists of a ceramic cup mounted on the end of a small-diameter PVC tube. A rubber stopper is mounted on the other end of the PVC tube. Tubing is inserted through the stopper to apply a vacuum to the cup and to remove collected soil water.

The upper end of a vacuum-operated lysimeter (Figure B-6) projects above the soil surface and contains a single outlet tube through which vacuum pressure or suction is applied to draw water into the porous cup. To collect the sample, a small-diameter tube is inserted through the outlet tube and a hand pump draws the sample to a collection flask. Vacuum-operated lysimeters are generally used to sample to depths of 6 feet.

Vacuum-pressure lysimeters (Figure B-6) are used to collect samples from depths greater than the suction lift of water (roughly 25 feet). The body tube of the sampler is generally about 2-feet long and can hold 1 liter of sample. The vacuum-pressure lysimeter contains two tubes extending through a two-hole rubber stopper. One tube (the discharge tube) extends to the base of the ceramic cup and connects to a sample bottle; the other tube extends a short distance below the rubber stopper and connects to a vacuum-pressure pump.

The vacuum-pressure lysimeter operates by drawing a vacuum with the discharge tube clamped. The sample is collected by opening the discharge tube and applying air pressure, which forces the sample into the sample bottle. One limitation to vacuum-pressure lysimeters is that the pressure that lifts the sample to the surface also forces some sample back through the porous cup into the formation. In addition, more pressure is required as sample depth increases. Consequently, vacuum-pressure lysimeters are suitable for depths of no more than 50 feet.

Figure B-6. Lysimeters

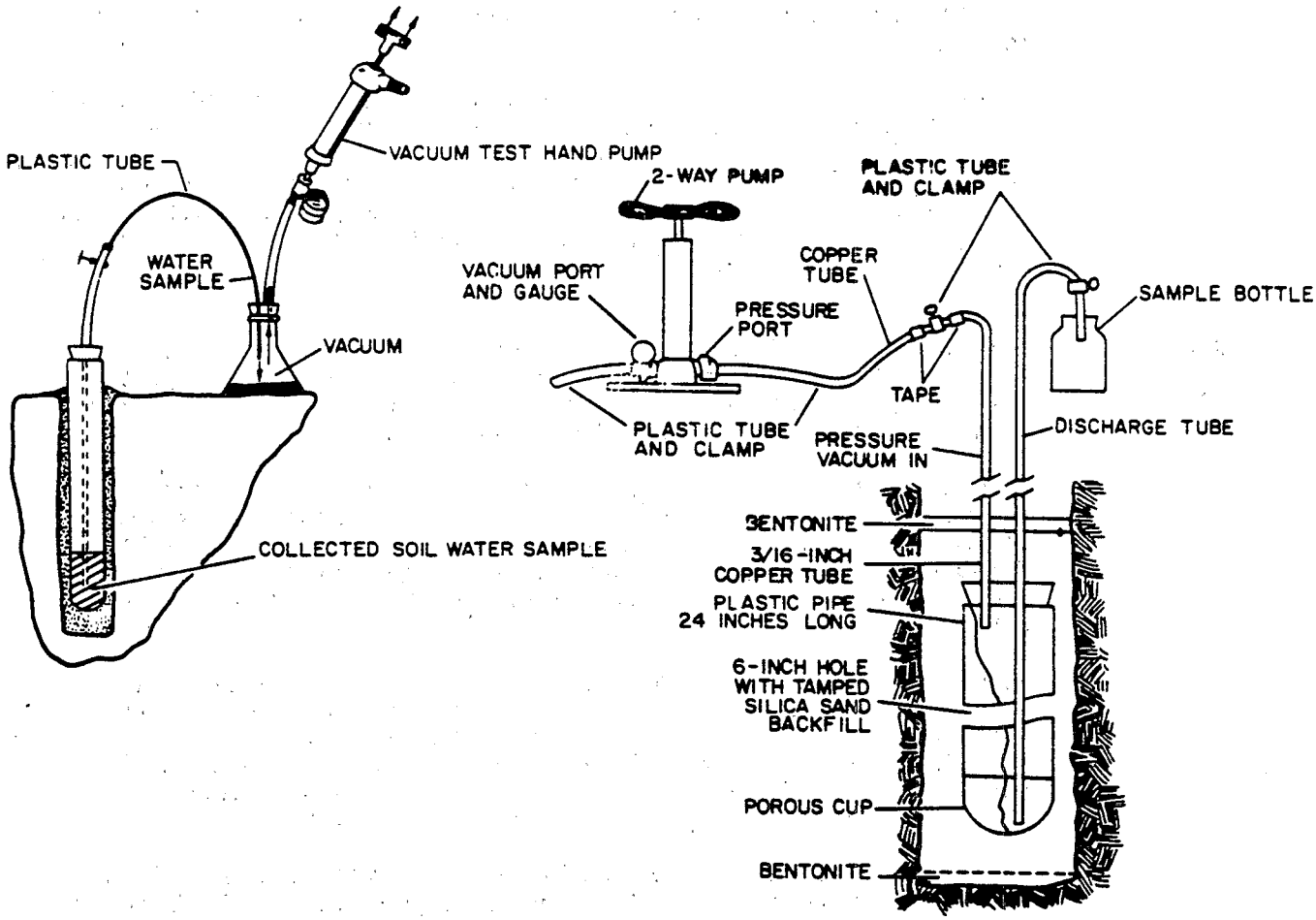

Vacuum Operated Lysimeter

Vacuum Pressure Lysimeter

Modifying the vacuum-pressure lysimeter with check valves (Figure B-7) prevents the device from forcing a portion of the sample back into the formation. The modified vacuum-pressure lysimeter is divided into two chambers connected by tubing containing a check valve. Both check valves open upwards. When a vacuum is applied, the lower check valve opens while the upper check valve closes, and soil water is drawn through the porous cup and into the upper chamber. When air pressure is applied, the lower check valve closes, and the sample is forced to the surface. Generally, nitrogen gas is used to lift the sample to the surface, although using compressed air will not significantly change sample chemistry (Peters and Healy, 1988).

An additional advantage of the modified vacuum-pressure lysimeter is that the check valves allow high pressures to be applied without damaging the ceramic cup. Also, this sampler can be used to a depth of 150 feet.

One major limitation of lysimeters is that samples cannot be obtained over the entire range of soil-water pressures. Lysimeters will not collect samples once the soil-water suction is great enough (about 0.8 bar) to cause an air bubble to enter the cup instead of soil water. However, although lysimeters are effective only over a small part of the range of suctions encountered in the subsurface environment, lysimeter suctions of 0 to 0.8 bar include most of the soil-water range (Everett, 1984).

Membrane Filter Samplers

Membrane filter samplers (Figure B-7) use polycarbonate or cellulose-acetate filters in conjunction with glass fiber "wicks" and collectors. In operation, capillary action draws soil water through the glass wick and membrane filter for collection. Advantages of the membrane filter sampler are that the collector sheets can contact a large area of soil and maintain a favorable collection rate when the collector becomes blocked with fine soil. Membrane filter samplers can be used to a depth of about 12 feet. There are two types of soil-water samples that may be collected: a grab sample or a composite sample (see Section B.2.1). Generally, soil-water samples are grab samples, although separate samples from different depths, locations, or times could be composited.

The size of the sample collected is determined by the requirements for analysis, and is specified in the SAP. For example, water samples analyzed for purgeable organic compounds should be stored in 40 mL septum vials with no head space (air) remaining. Water samples for metals or cyanide analysis may fill a 16-ounce or 1-liter bottle. The size of the sample collected, however, may be limited by the amount of soil water present in the porous cup. Provisions for compositing successive samples to obtain a sufficient volume of soil water to perform the required analysis should be specified in the SAP.

The SAP should also specify the order in which samples should be collected. Generally, samples should be collected in the order of decreasing volatility; volatile contaminants should be sampled before nonvolatile contaminants (U.S. EPA, 1986a). See Section B.2.1 for a preferred collection order of contaminants.

Figure B-7. Suction Samplers

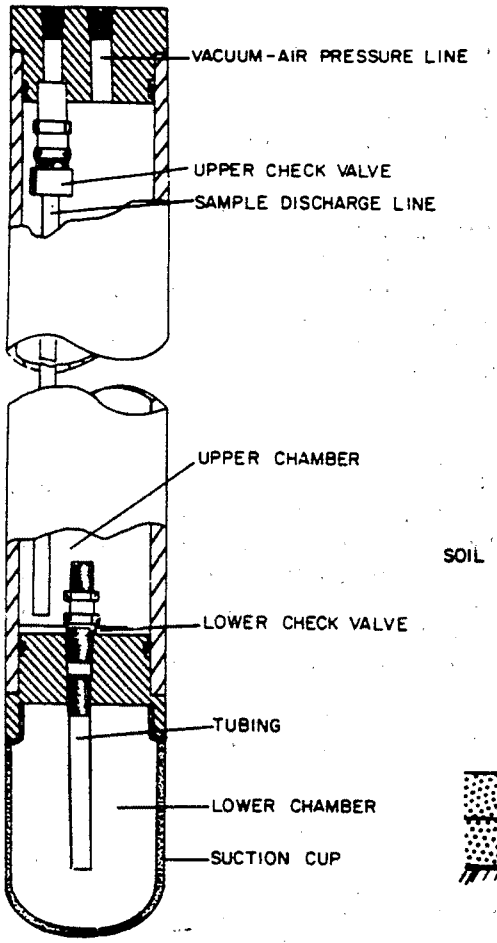

Vacuum Pressure Lysimeter
with Check Valves

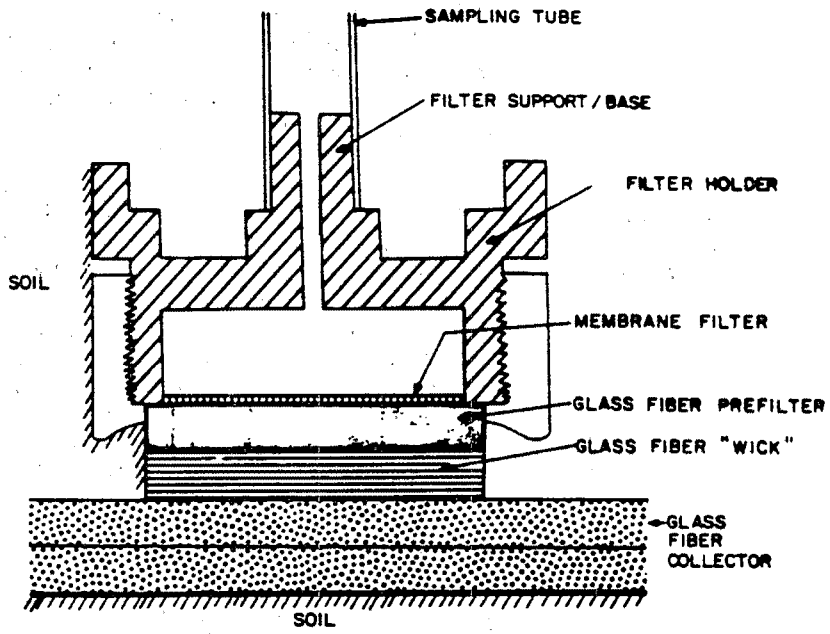

Membrane Filter Sampler

Sampling Technique

The amount of vacuum applied to a lysimeter and the corresponding intake rate have a significant effect on sample quality (Wilson, 1980). Specifically, fast-rate samplers collect most of the sample at the beginning of the sampling interval. Consequently, unless the soil-water quality is not changing with time, the collected sample may not be representative. Therefore, in order to collect a sample that is representative of the soil water draining to the water table, the rate of sample collection should correspond to the pore water drainage rate.

The oversight assistant should be aware that soil-water techniques are not appropriate for sampling for polynuclear aromatic hydrocarbons, alkanes with greater than 10 carbons, pentachlorophenol, and other chemicals with an octanol water partition coefficient (log K_{ow}) of 4 or larger (Brown, 1986). Such compounds preferentially adsorb to the soil and will generally not be found in soil water; soil core samples should be used to detect these compounds. Chemicals having log K_{ow} values of 3 or less will generally be found in soil-water samples, while chemicals with octanol water partition coefficients between 3 and 4 may be detected by either soil-core or soil-water techniques.

The oversight assistant should also be aware that trace-metal concentrations can be significantly affected by soil-water collection techniques if the total dissolved solids concentration of the soil-water is less than 500 ppm (Peters and Healy, 1988). In such dilute soil-water solutions, the sample may not be representative of the trace-metals concentration. In addition, although the use of nitrogen as the pressurant in lysimeters is prudent and will preclude oxidation of chemical constituents, the use of air causes little difference in soil-water chemistry (Peters and Healy, 1988).

Field Analytical Techniques

Field analytical techniques for screening soil water (and ground and surface water) can be broadly outlined in six categories:

- pH meters;
- Conductivity meters;
- Thermometers;
- Dissolved oxygen meters;
- Inorganic compounds kits/instruments; and
- Organic compounds instruments.

These instruments are discussed in detail in Section B.2.1, Surface Water Sampling. Except for self-purging instruments (for example, gas chromatographs), the oversight assistant should check that the sampling team decontaminates the analytical equipment between samples to avoid cross-contamination.

B.2.4 Surface Soil

This section discusses methods for sampling surface soil. Although the distinction between surface soil and subsurface soil is variable and site-specific, surface soil is generally considered to be soil that can be sampled using hand tools (that is, less than about 3-feet deep).

Sampling Locations

Sampling locations for soil should be specified in the SAP. While the oversight assistant should check if the actual sampling locations are consistent with those listed in the SAP, the oversight assistant should also be aware that site-specific conditions may dictate a modification in sampling location. Sampling locations will vary with surface features such as rock outcrops, drainage patterns, fill areas, and depositional areas. The guidelines outlined in Section B.1.1 should be followed to determine if a new sampling location is "reasonable and consistent" with the sampling objectives, and is therefore acceptable or not. Sampling locations should be recorded on a site map or drawing; a comparison should be made between the actual sampling locations and those specified in the SAP. The oversight assistant should also note the general soil sample location, such as soil taken from a field, a drainage ditch, or beside an impoundment.

The oversight assistant should note if the sampling team takes any samples from depositional areas such as outwashes or previously flooded areas. For screening purposes, the sampling team usually samples in depositional areas on the periphery of the study area, and primarily at the downstream or downgradient portion(s). This is not appropriate for investigative purposes because it will bias the results toward elevated concentrations.

General Soil and Vegetation Conditions

The general conditions of the soil and vegetation are important to surface soil sampling as they may provide information on potential contamination. The oversight assistant should be particularly interested in stains, dark residues, and dead or stressed vegetation that may indicate soil contamination. The oversight assistant should record the general conditions of the soil being sampled at each location if determined by a sampling team geologist. Of particular interest are soil moisture, soil type, particle size, and color.

Sampling Equipment

Generally, any sampling equipment that preserves the integrity of the sample and produces a sample that is representative of the sample location is acceptable. The oversight assistant should note if the actual sampling equipment is consistent with the sampling equipment listed in the SAP.

The sampling team should collect surface soil samples using clean trowels, scoops or spoons, grain samplers, sampling triers or hand augers, or corers. Soil sampling equipment used for sampling for trace contaminants should be constructed of stainless steel. For sampling trace organic compounds, brass or carbon steel is acceptable in addition to stainless steel. The sampling team should never use chromium, cadmium, or galvanized-plated or -coated equipment for soil sampling operations. Similarly, the sampling team should not use painted equipment unless all paint and primer is removed from the equipment by sandblasting or other means before the equipment is used for collecting soil samples. If the sampling team uses gasoline-powered equipment, the oversight assistant should note if the equipment is downwind

to avoid cross-contaminating the surface soil samples with volatile organic compounds.

For samples that are less than 5 inches below the surface, the sampling team may use trowels or spoons. Garden-type trowel blades are usually about 3 by 5 inches long with a sharp tip. A laboratory scoop is similar, but the blade is usually more curved and has a closed upper end to contain materials. Scoops come in different sizes and are made of various materials. Trowel size should be selected depending upon the volume and depth of the sample to be taken; the material should be selected based on the type of contaminant. (Remember: galvanized-plated trowels should never be used).

A grain sampler (Figure B-8) consists of two slotted telescoping tubes, usually made of brass or stainless steel. The outer tube has a conical, pointed tip that permits the sampler to penetrate the soils. Grain samplers are 24 to 40 inches long by 0.5 to 1.5 inches in diameter, and are best for collecting dry, granular, or loose soils with particles no greater than 0.25 inches in diameter (soils classified by the Unified Soil Classification System as coarse sands or finer). Grain samplers are of limited use for moist, compressed, and large-particle soils.

A typical sampling trier is a stainless steel tube about 24 to 40 inches long and 0.5 to 1 inch in diameter, with a wooden handle and a slot that extends its entire length (see Figure B-8). The tip and edges of the tube slot are sharpened to enable the trier to cut a core when rotated in the soil. Sampling triers (as well as hand augers) are used to sample moist, compressed soils, although the sampler often has difficulty removing the sample that has been cut with the trier.

The sampling team may use corers to obtain a relatively undisturbed surface soil sample, and to obtain a quantitative measurement of soil contamination. Thin-walled corers (known as push tubes or Shelby tubes) can be used manually or with power equipment. Manual push tubes are straight tubes generally 2 inches in diameter or less and are of varying length. Larger diameter push tubes require power equipment. A tapered nosepiece acts as the cutting edge of the tube. They are generally constructed of chrome-plated steel or stainless steel and can usually be adapted to hold brass or polycarbonate plastic liners.

The Shelby tube is a stainless steel tube approximately 12 inches long and 2 inches in diameter. The edges are beveled into a cutting edge at one end of the tube. The other end can be mounted on an adapter that allows attachment to the end of the hand auger. The Shelby tube is particularly useful for undisturbed samples, since the sample may be shipped intact within the tube directly to the laboratory for analysis. A split-spoon sampler may also be used to collect undisturbed samples, but is more typically used in subsurface soil applications.

One method of obtaining a disturbed-surface sample is by using an ordinary post hole digger. The sampling team may use the post hole digger to obtain a sample of surface soils to approximately 3 feet below grade.

Sample Type

Surface soil samples may be either grab or composite samples. Grab samples are samples taken at a single location (see Section B.2.1).

Figure B-8. Common Soil Samplers

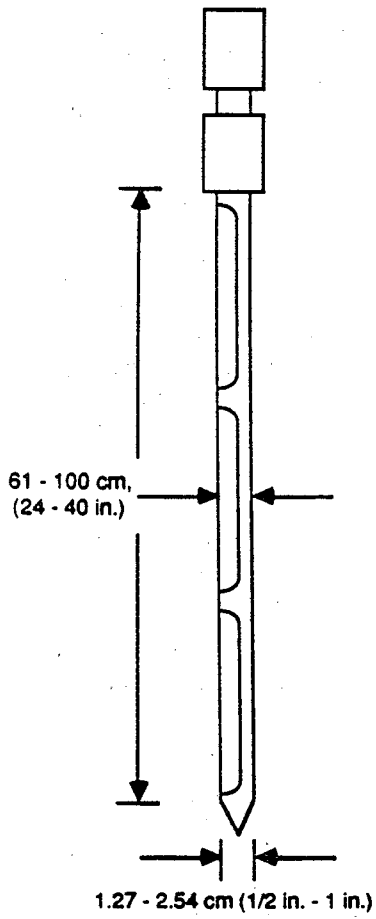

Grain Sampler

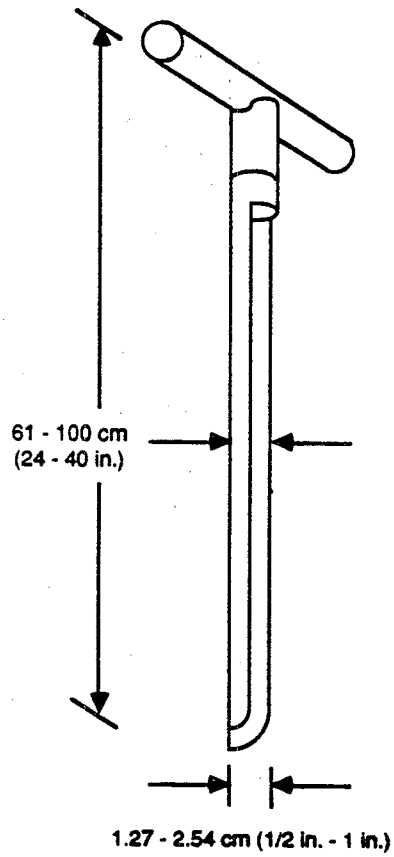

Sampling Trier

The size of the sample collected is determined by the requirements for analysis, and is specified in the SAP. For example, soil samples for purgeable organic compounds analysis should completely fill a 4-ounce (120 mL) sample container; no head space should remain in the sample containers. For trace organic compounds and metals, 4 to 8 ounces (120-240 mL) of sample are usually collected.

The SAP should specify the order in which samples should be collected. Generally, samples should be collected in the order of decreasing volatility (U.S. EPA, 1986a). See Section B.2.1 for a preferred contaminant collection order.

Sampling Technique

The oversight assistant should be aware that many of the techniques used to collect soil samples disturb the sample, and therefore provide only semi-quantitative or qualitative results. Before sampling, the sampling team should remove leaves, grass, and surface debris from the sampling location by brushing or scraping it aside. Samples are obtained using any of the equipment described in Section B.2.4.

Composite samples should be thoroughly mixed. The SAP should describe the specific mixing procedures. Except for volatile organic samples, the sampling team generally removes the soil from the sampling device and places it in a cooking-glass pan or a stainless steel pan. The soil in the pan should be scraped from the sides, corners, and bottom of the pan, rolled to the middle of the pan, and mixed (a Teflon-coated or stainless steel spoon should be used). The sample should then be quartered and moved to the four corners of the container. Each quarter of the sample should be mixed individually. Each quarter is then rolled to the center of the pan and the entire sample is mixed again (U.S. EPA, 1986c). To assist compositing, dry soil may also be sieved prior to or during mixing.

Volatile organic soil samples should never be mixed in the field since this results in significant loss of volatile constituents. Rather, volatile organic samples should be composited by the analytical laboratory. If subsamples or samples from different locations are to be composited, aliquots should be collected into the same container with compositing subsequently performed in the laboratory.

Dust control is of primary concern when sampling soils -- particularly at highly contaminated sites. Dust generated by heavy construction equipment or dry conditions can spread the contamination and create off-site health hazards. The site HSP may require the sampling team to cover spoils piles or institute other dust control measures such as spraying water or constructing perimeter barriers. The oversight assistant should consult the site HSP and note conditions (such as high winds) that might spread contamination from the sampling locations.

Field Analytical Techniques

Field analytical techniques are generally limited to ground water, soil water, or soil vapor. For detailed information on ground-water field analytical techniques, see Section B.2.1. For detailed information on soil vapor field analytical techniques, see Section B.2.6.

B.2.5 Subsurface Soil

This section discusses methods for sampling subsurface soils. Although the depth of subsurface soils is variable and site-specific, subsurface soil may generally be considered soil that is more than 3-feet deep.

Sampling Locations

Sampling locations for subsurface soil samples should be specified in the SAP (see Section B.2.1 for considerations in sampling locations). The sampling locations should be recorded on a site map or drawing by the oversight assistant. The agreement between the actual sampling locations and those specified in the SAP should be noted.

General Soil and Vegetation Conditions

Subsurface stains or residues should be noted as they could result from underground leaks or leachate migration. As with surface soil, if a sampling team geologist determines the subsurface soil type, particle size, and other characteristics, the oversight assistant should record such information.

Sampling Equipment

Generally, any sampling equipment that preserves the integrity of the sample and produces a sample that is representative of the sample location is acceptable. The oversight assistant should check that the actual sampling equipment is the same as the equipment listed in the SAP.

The oversight assistant should verify that all soil sampling equipment used for sampling for trace contaminants is consistent with the parameters set forth in Section B.2.4.

Disturbed Soil Samples

Many of the techniques used to collect soil samples disturb the sample, providing only semi-quantitative or qualitative results. When disturbed soil samples are satisfactory, the sampling team may use soil augers to collect a subsurface sample. There are three general types of machine-driven augers: (1) helical augers from 3 to 16 inches in diameter, (2) disc augers up to 42 inches in diameter, and (3) bucket augers up to 48 inches in diameter. Soil augers work best in loose, moderately cohesive, moist soils, but are generally limited to sampling soils above the water table and must be sized according to the amount and maximum size of gravel, cobbles, and boulders present.

Undisturbed Soil Samples

The sampling team will use a split spoon sampler most often to obtain undisturbed soil samples (U.S. EPA, 1987a). A split spoon sampler is made of heavy steel tubing that can be split into two equal halves to reveal the soil sample (Figure B-9).

Sample Type

Sample types for surface and subsurface soil are the same. Refer to Section B.2.4 for a detailed discussion on soil sample types.

Sampling Technique

Before sampling, the sampling team should remove leaves, grass, and surface debris from the sampling location by brushing or scraping it aside. Composite samples should be thoroughly mixed, as outlined in Section B.2.4.

Figure B-9. Split Spoon Sampler

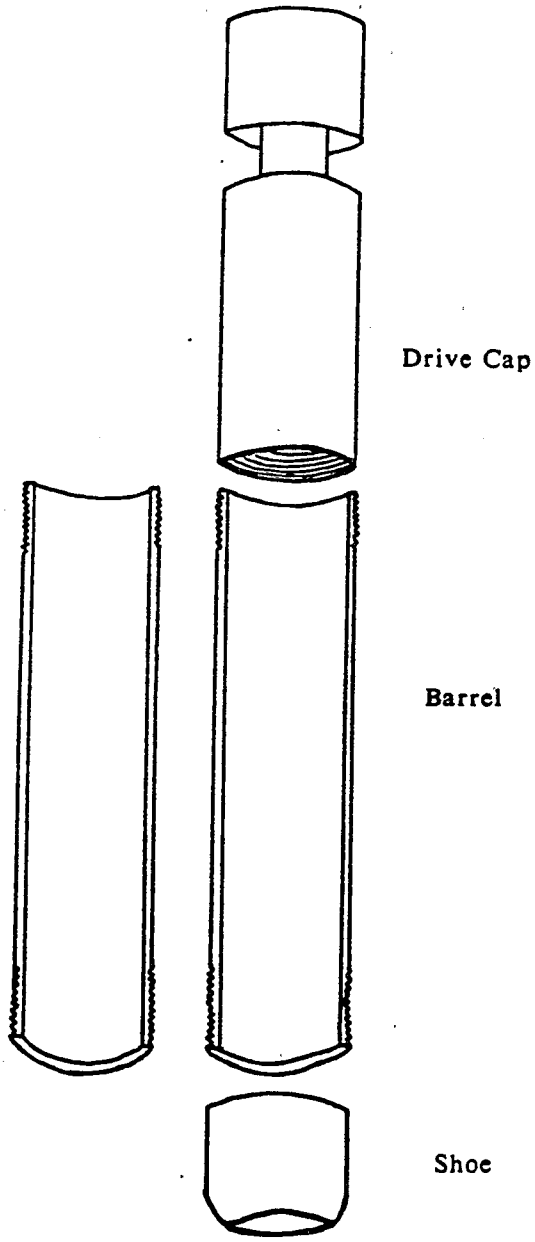

Generally, the sampling team will collect subsurface samples through two procedures: (1) subsurface soils are exposed and are then sampled using surface sampling equipment, or (2) samples are taken directly from the subsurface using augers or split spoons. A split spoon sampler is attached to a drill rod and advanced into the soil at the bottom of the borehole. The split spoon is removed from the hole and opened, revealing the sample. The sampling team should discard the top 2 or 3 inches of sample because it is usually disturbed by the process.

The sampling team may expose the subsurface soil by using either an ordinary post hole digger or by constructing test pits. Whenever these methods are used, the oversight assistant and the sampling team should monitor the exposed soil with an explosimeter or organic vapor analyzer (OVA) to avoid the danger of explosion or fire (see Sections B.2.9 and B.2.6, respectively).

The sampling team may construct a test pit or trench to provide a continuous exposure of the ground along a given line or section. The sampling team will usually excavate a pit as a continuous line, or as a series of short pits spaced at appropriate intervals. Test pits may be hand-dug with shovels or may be dug with equipment such as backhoes. Test pits are generally no deeper than a few feet below the water table. The minimum recommended cross-section for a hand-dug pit is 3 by 5 feet. All hand-dug pits should be cribbed, normally with 3- to 6-inch lumber. Dragline, backhoe, clamshell, caisson drilling or auger equipment, and bulldozer pits are usually more economical than hand-dug pits, but are not practicable where a depth of more than 15 feet is desired.

Dust control is of primary concern when sampling soils -- particularly at highly contaminated sites. Dust generated by heavy construction equipment or dry conditions can spread the contamination as well as create off-site health hazards. The site HSP may require the sampling team to cover spoils piles or institute other dust control measures such as water spraying or perimeter barriers. The oversight assistant should consult the site HSP and note conditions which might spread contamination from the sampling locations.

Field Analytical Techniques

Field analytical techniques are generally limited to ground water, soil water, or soil vapor. For detailed information on ground-water field analytical techniques, see Section B.2.1. For detailed information on soil vapor field analytical techniques, see Section B.2.6.

B.2.6 Soil Vapor

Soil vapors are gases contained in the soil pore spaces in the vadose or unsaturated zone of the earth's upper surface. Nitrogen, oxygen, carbon dioxide, water vapor, and smaller amounts of other chemical vapors naturally occur in the soil. Due to contamination, other chemical vapors may also have been introduced to the soil. These soil vapors may arise from chemicals spilled on the surface of the ground or poured in wells or bore holes; from chemicals in leaking impoundments or other basins; from chemicals in leaking underground tanks and associated plumbing or pipes; or from volatilization of chemicals in contaminated ground water. The concentrations of these chemicals in the soil vapor will depend upon a number of parameters such as the quantity and concentration of the source of contamination, the proximity of the contamination to the location being monitored, the vapor pressure, the solubility and vapor density of the contaminant, and the mobility of the

contaminant through the soil. Volatile organic compounds and occasionally mercury and radon are normally the only constituents analyzed in soil vapor samples.

Sampling Locations

Sampling locations and depths for soil vapor samples should be specified in the SAP. The oversight assistant should note whether the actual locations are consistent with the locations that are listed in the SAP, but should also be aware that site specific conditions, such as obstructions or lack of access to the sampling location, may dictate a modification in the sampling locations. The oversight assistant should use his/her best judgment to evaluate whether changes in sampling locations are reasonable and consistent with the objectives of the sampling and analysis activities (see Section B.1.1).

The oversight assistant should record all information pertinent to the location and depth of each soil vapor sampling point on a site map or drawing. The agreement between the actual sampling points and those specified in the SAP should also be noted.

General Soil and Vegetation Conditions

If determined by a sampling team geologist, the oversight assistant should record the general conditions of the soil being sampled in each soil vapor sampling location. Items of particular interest include the amount of soil moisture and the soil type, particle size, and color. The approximate organic content of surface soil samples may also be noted. If the sample is being collected from a borehole, the oversight assistant should verify that the sampling team geologist is maintaining a well log, copies of which should be made available to the oversight assistant.

The oversight assistant should also note soil background conditions. It is important to know whether the sample is being collected under an industrial area or in an area where waste material is or was stored or disposed. Any conditions which could affect sampling activities or sample quality should be documented.

In addition, the general nature and condition of the vegetation in the vicinity of each soil vapor sampling location should be documented. Special attention should be paid to stressed or dead vegetation which may be an indication of environmental contamination of the soil.

Sampling Equipment

Soil vapor sampling equipment should be chosen to preserve the integrity of the sample and thus to yield a sample which is representative of soil vapor found at the sample location. Various types of soil vapor collection and storage methods are available. Glass, Teflon, or stainless steel samplers, including gas sample lines or containers, should be used to collect and store soil vapor samples.

Sample Collection Methods

Soil vapor samples may be collected by a variety of methods. These methods include the direct collection of a soil sample or soil core using soil or subsurface soil collection methods listed in Sections B.2.4 and B.2.5, respectively, with subsequent vapor analysis, or the direct collection of soil vapor by the use of soil vapor collection probes.

The technique used to collect the soil sample should keep the sample intact to prevent loss of soil vapors to the air. Samples collected with a split spoon sampler are ideal (see Section B.2.5). The use of augers (see Section B.2.5) should be avoided as this technique does not keep the soil sample intact. Although the use of split spoons is easy to perform in the field, it allows for the loss of some soil vapor before the sample is sealed in the sample bottle. Alternatively, soil vapors may be collected directly by the use of a soil gas probe. Soil gas probes consist of a long tubular probe containing holes that is driven into the undisturbed, or minimally disturbed, soil to be sampled. The major advantages of this type of sampling system are that it is quick and that the sampled soil is undisturbed.

Sample Storage or Analysis Methods

Some soil vapor sample analysis methods require that the soil or soil vapor sample be stored for analysis, while other methods allow direct analysis of the sample with no storage required.

Three types of storage are available when sample storage is required prior to analysis. The first of these involves the collection of the entire soil sample. Once collected, an entire soil sample may be placed in an appropriate container (Section B.3.1) for shipment to a laboratory for analysis of the soil vapors. Alternatively, soil vapors may be collected directly into a suitable container (gas collection bag) using one of the probes discussed above. The soil vapor may then be analyzed in the field by the use of calorimetric tubes, by the use of field analytical instrumentation described for subsurface sampling (Section B.2.5), or by the use of other, more sophisticated instrumentation such as a gas chromatograph. The third storage technique involves the sorption of the soil vapors onto an adsorbent material such as activated carbon or commercially available adsorbent resins. The activated carbon or resins are then sent to an analytical laboratory for extraction and analysis.

There are advantages and disadvantages to each of these techniques. Direct collection and analysis of the soil vapor using sophisticated instrumentation is the most representative method, but requires the use of delicate equipment in the field. The use of calorimetric tubes, on the other hand, is simple but not considered qualitative. The soil vapor is passed through the appropriate calorimetric tube or tubes and the concentration of the chemicals estimated by the change in color of the material in the tube(s). The reading of the color change in the tubes is subjective and subject to interferences.

The collection of samples in a Teflon bag is a relatively uncomplicated method to determine the chemicals that are present in the soil as vapor. The bags, however, may leak. In addition, certain compounds are known to penetrate Teflon and, if the bags are exposed to light, photochemical reactions may occur, causing the sample to be somewhat less representative.

Direct collection of soil into a bottle for laboratory analysis of the soil vapors is also relatively uncomplicated. Unfortunately, the soil vapors collected in this manner may not be representative of soil vapors occurring in the environment. For example, a contaminated soil sample could be collected from the capillary zone where soil vapors would be minimal. But once that sample was placed in a bottle and allowed to equilibrate with air head-space, the contaminants would begin to partition into the air -- a slow process in the saturated zone. Thus, samples collected in this manner may provide good information about what contamination is actually present in the soil but may

not be representative of the ambient soil vapor. Also, the method of collecting and transferring the sample to the sample bottle for this method may result in the loss of some of the soil vapor.

Adsorption of the soil vapors onto an adsorbent material during collection is the most complicated detection method. The soil gas must be passed through an adsorbent material, allowing any gases to be adsorbed. The adsorbent must be sealed and shipped to a laboratory where the gases are removed either by heat or a solvent and then analyzed. Some chemical reactions may occur on the adsorbent or when the material is heated or treated with solvent. Also, some of the adsorbed materials are much harder to remove from the adsorbent than others. The adsorbent tube is, however, easier to package, ship, and preserve than the collection containers for the other two methods.

Sample Type

Soil vapor samples are gas samples collected from locations below the surface of the earth. They are usually collected as grab samples for the relative ease of the analysis of these samples and also the location-specific information which is desired from the samples.

Sampling Technique

If the sampling team uses soil sampling equipment, the oversight assistant should ensure that the soil sample is kept intact; if the sample breaks apart, the soil vapor will escape. The sampling team will usually use a split spoon sampler to collect the sample. To collect the sample for soil gas analyses, the sampling team should open the split spoon sampler as soon as possible after sample collection. The sampling team should remove a sample of soil from the center section of the core of the split spoon sampler using a stainless steel or Teflon-coated spatula, and immediately place it in a sample vial. The sampling team should fill the container to minimize head space.

If the sampling team uses a soil gas probe, the team should drive the probe into undisturbed or minimally disturbed soil. When the probe is in place at the desired location and depth, the sampling team uses an air pump to draw gases from the ground and into the sampler through a sample tube and pump, and then directly to an analytical instrument, the appropriate calorimetric tube, or a sampler storage container. The oversight assistant should check that the sampling team operates the system for sufficient time to allow the standing air to purge from the system before sampling. This length of time depends upon the internal volume of the soil gas probe, the length and inside diameter of the sample tube, and the pumping rate of the pump. An adequate length of time can be determined by continuous sampling of contaminated soil. The gas exiting from the sample pump should be monitored with a suitable instrument, such as a photoionization detector, until its reading reaches a steady value, after which the pump is allowed to run for several more minutes. At that time, the sample may be collected. A purging time of approximately 10 minutes with a pumping rate of 4 liters per minute is usually adequate to purge most systems.

Field Analytical Techniques

Field analytical techniques appropriate for screening soil vapor include:

- Organic vapor detectors, and
- Colorimetric tubes.

Organic Vapor Detector

Several types of organic vapor detectors are available for use in the field. The most common of these are referred to as the Flame Ionization Detector (FID) of which the Foxboro organic vapor analyzer (OVA) is an example, and the photoionization detector (PID) of which the HNu is an example. The FID uses a hydrogen-oxygen flame to ionize organics; the PID uses an ultraviolet light source. Both offer real-time readout in parts per million based upon the calibration gas. Both detectors, as commonly used, are capable of determining that organic compounds are present but not of specifically identifying the organic compounds. FID attachments are available that allow organics to be separated and tentatively identified. The PID is more simple than the FID to use but both are capable of detecting organic compounds in the low ppm range. Neither instrument works well at temperatures below 5 degrees Celsius. The PID should not be used in very humid environments (such as rain, although some specially modified instruments are designed to remove water vapor before the sample reaches the detector). The PID can, by changing its photoionization source, be made to respond to most organic compounds (except methane and hydrogen cyanide) and some halogenated hydrocarbons. The FID is sensitive to methane but relatively insensitive to many halogenated organics.

Colorimetric Tubes

Colorimetric tubes, commonly known as Drager or MSA tubes, are used in conjunction with an air pump to draw a known amount of gas through an indicator tube. These tubes are usually specific to a certain chemical over a certain concentration range. The detector tubes may also be sensitive to other, similar chemicals; thus, their specific instructions should be carefully read. After the tube is opened and an appropriate amount of gas is drawn through the sample tube, the length of material in the tube which has changed color is read from a scale etched into the side of the tube to determine the approximate concentration of the vapor in the air. Tubes are available that are sensitive to a variety of chemicals at various concentrations; however, because a subjective judgment about the length of the color change in the tube is required, their accuracy is low; in addition, some tubes are sensitive to more than one chemical. If the upper range of the tube is exceeded, it is usually possible to repeat the experiment using a smaller air sample. Tubes should be read immediately after sampling. High humidity and sensitivity to chemicals other than that for which the tube was intended may cause interferences.

B.2.7 Sludge and Slurry

Sludges and slurries are part solid and part liquid. They range in consistency from dewatered solids to watery, low-viscosity liquids. A slurry is typically a liquid containing relatively small amounts of suspended solids which tend to settle out of the solution rather slowly. A sludge is also a mixture of solids and liquids which generally has larger amounts of solids or more viscous (thicker) liquids. While slurries are typically uniform in consistency, sludges tend to separate with a low density or liquid layer forming on top and more dense material, usually including solids, settling to the bottom. Sludges and slurries may be present in impoundments, lagoons, or ponds; in storage tanks, drums, or other containers; in settling or drying/dewatering beds; or directly on the ground as in a landfarm.

Sampling Locations

Sampling locations for sludges or slurries should be specified in the SAP. The oversight assistant should rely on best professional judgment to evaluate

whether any changed sampling locations are reasonable and consistent with the sampling objectives (see Section B.1.1). Sampling locations should be recorded on a site map or drawing and compared to actual locations listed in the SAP.

If the sludge or slurry to be sampled is contained in a tank, drum, or other container, a single grab or a composite sample (see Section B.2.7) that is representative of the contents of the container is adequate. If a thin layer of overlying liquid is present, the sampling team should include a portion of this with the sample because it is representative of the actual material and will prevent drying or oxidation of the sample before analysis.

If the sludge or slurry is contained in an impoundment, pond, or lagoon (collectively referred to as lagoons), the number of samples to be taken will vary with the size and shape of the lagoon as well as other factors such as the depth of the sludge or slurry, the location of inlets or discharges, and the rate of accumulation or addition of the sludge or slurry to the lagoon. If the sludge or slurry is deep, grab (discrete) samples may be collected at several depths and at various locations throughout the lagoon. If the sludge or slurry is less the 8 inches deep, a single sample at each sampling location is usually adequate. In cases where the lagoon is unlined, sampling of the underlying soil and ground water may also be required to determine the extent of contamination.

Sludges or slurries may also be placed in drying beds, landfarms, or directly on the ground for disposal (if it complies with land disposal restrictions (LDRs)). In these cases the sampling locations for the sludge or slurry should be determined by the size and depth of the area covered. Again, if the depth of the material is less than 8 inches, usually one sample representative of the sludge or slurry is collected at each of the sampling locations. For deeper beds, grab samples should be collected at several depths and at various locations throughout the body of material.

General Sludge and Vegetation Conditions

The oversight assistant should document the manner in which the sludge or slurry is stored (containers, lagoons, or directly on the ground). The general conditions of the containers, lagoons, or areas where the sludge or slurry is contained or deposited should also be described. This description should contain an estimation of the areal extent covered by the sludge or slurry as well as the approximate depth of the actual sludge or slurry and the depth of any water or liquid covering the sludge or slurry. Any sources to or outfalls from the area containing the sludge or slurry should be recorded. Background conditions including abnormal vegetative conditions should also be noted.

Sampling Equipment

The sampling equipment must be chosen to preserve the integrity of the sample to yield a sample that is representative of the sludge or slurry found at the sampling location. The condition of the sludge or slurry, the viscosity of the sample, and depth at which the sample will be collected will affect the choice of sampling equipment. Stainless steel, glass, or Teflon-coated samplers should be used to collect samples for trace organic compound analysis, while plastic, glass, or Teflon-coated samplers should be used to collect samples for trace metals analysis. The oversight assistant should check the sampling equipment to verify that it is equivalent to that listed in the SAP and that it is suitable to fulfill the sampling requirements of the project.

For the purposes of this discussion, sampling equipment for sludges and slurries has been divided into: (1) sampling equipment for solid or nearly solid sludges, and (2) sampling equipment for nonviscous sludges and slurries.

Sampling Equipment for Solid or Nearly Solid Sludge

Solid or semi-solid sludges can be considered materials that are nonliquid. This category would include solid or dried sludge, thick sludge, and tar or gelled liquids. When the sludge to be sampled is solid or nearly solid, it should be sampled using either soil sampling equipment or modifications of soil sampling equipment.

Appropriate soil or sediment sampling equipment includes: trowels, scoops, and spoons; corers; and dredges. The use of trowels, scoops, and spoons and corers is discussed in Section B.2.4, surface soil sampling. The use of dredges is discussed in Section B.2.1, surface water and sediment sampling.

Sampling Equipment for Non-Viscous Sludge or Slurry

Nonviscous sludges or slurries may have a consistency ranging from that of water to that of thick mud. This material may contain suspended materials, some of which may have settled to the bottom of the container. Liquid sludge or slurry may be sampled by the use of:

- Glass tube samplers;
- Composite liquid waste samplers;
- Bacon bomb samplers;
- Pumps;
- Weighted bottle samplers; and
- Kemmerer or Van Dorn samplers.

Samples may be collected from drums, other containers, or lagoons that do not contain more than approximately a 1-meter depth of liquid material by the use of glass sampling tubes, composite liquid waste samplers, or peristaltic pumps. Deeper containers, containers that are hard to reach due to location or obstructions, or lagoons will probably be sampled by pumps, weighted bottle samplers, bacon bomb samplers, or Kemmerer samplers.

A glass tube sampler (also known as a drum thief) may be used to collect samples from drums or other shallow containers or lagoons. Glass tube samplers collect a grab sample that, when collected over the entire depth of the container or lagoon being sampled, may be representative of the material in the container or lagoon. The length of the tube is generally determined by the depth of the container or lagoon to be sampled. Tubes of 48-inch length and 0.25- to 0.63-inch inside diameter are commonly used to sample drums. Samplers of this type may also be constructed of Teflon or PVC tubing. The disadvantage of this type of sampler is that it is easy to lose some sample material when the tube is withdrawn from the medium being sampled.

Alternatively, a composite liquid waste sampler (COLIWASA, Figure B-10) may be used to sample sludges or slurries in drums, other containers, or lagoons. A composite liquid waste sampler is a glass tube sampler with a rod running through the tube's center that can be used to open or close a stopper

Figure B-10. Sludge and Slurry Samplers

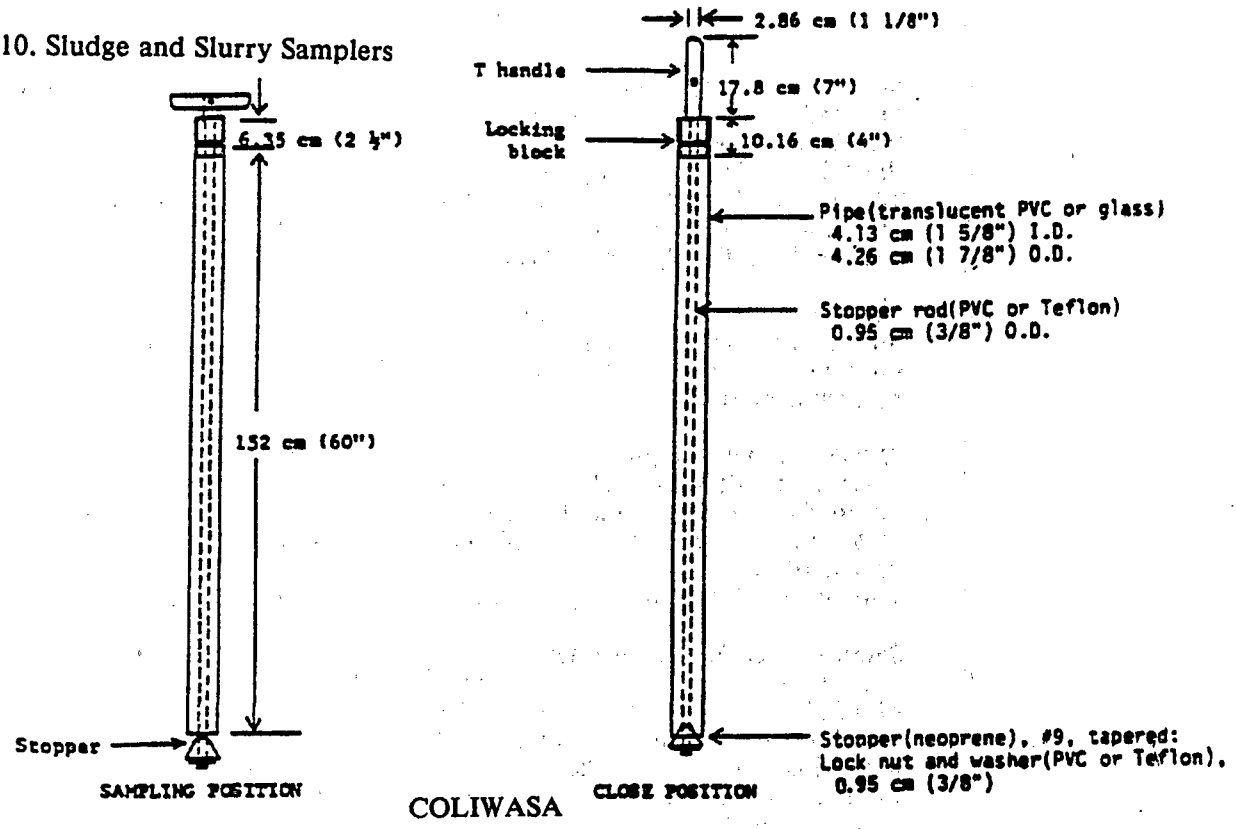

COLIWASA

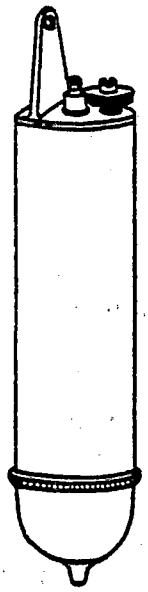

Bacon Bomb Sampler

on the bottom of the tube. The composite liquid waste sampler is superior to the glass tube sampler because it traps the sample in the tube so that none is lost when the sampler is withdrawn from the sludge or slurry. The length of the tube is determined by the size of the container to be sampled. For drum sampling, a 60-inch tube length is standard. Tube diameters of about 1.5 inches are commonly used. Samplers of this type may also be constructed of Teflon, PVC tubing, or stainless steel.

Tanks or lagoons may be sampled at discrete depths (usually at the top, middle, and bottom) by using a weighted bottle sampler, a bacon bomb sampler, or a Kemmerer sampler. If desired, samples from various depths can be composited.

A bacon bomb sampler (Figure B-10) consists of a cylindrical container with a valve at the bottom to allow the sample to enter when opened, and attachment points for the trip line and sample line at the top. The container can be made of various materials and is available in various sizes. This sampler also works best with low viscosity-liquids but will also work with viscous liquids. This sampler collects grab samples and may be used at any depth (NUS, 1987).

Sampling techniques are described below for both solid or nearly solid sludges and slurries and liquid sludges and slurries. These techniques relate to the sampling equipment described in Section B.2.7. If the sludge or slurry is contained in a drum or container which must be opened, the sampling team, including the oversight assistant, should ensure that all health and safety procedures are strictly enforced. (See Section B.2.8 for additional information on drum opening procedures.)

Sample Type

Sludge and slurry samples may be composited or may be collected as discrete grab samples. Generally, grab samples are collected and analyzed from drums or small containers. Grab samples may also be collected from larger containers or lagoons and may or may not be composited prior to analysis. The types of samples to be collected will be specified in the SAP.

Sampling Technique

Sludges and slurries are generally concentrated by nature. When sampling sludges and slurries, the sampling team should avoid spreading contamination such as by splashing, overspilling, or transporting sample material away from the sample location. For example, contaminated sampling equipment should not be placed or dragged on the ground. The sampling team should place all contaminated equipment into plastic bags for transfer to the decontamination area. If the sampling team is decontaminating sampling equipment between sampling locations, care should be taken to ensure the proper handling and disposal of all contaminated materials (see Section B.4.3).

Sampling techniques are described below for both solid or nearly solid sludges and slurries and liquid sludges and slurries. These techniques relate to the sampling equipment described in Section B.2.7. If the sludge or slurry is contained in a drum or container which must be opened, the sampling team, including the oversight assistant, should ensure that all health and safety procedures are strictly enforced. (See Section B.2.8 for additional information on drum opening procedures.)

Sampling Solid or Nearly Solid Sludges and Slurries

Solid or nearly solid sludges and slurries may be sampled with a trowel, scoop, or spoon to a depth of approximately 20 inches. This method may also be used if a thin water layer (less than several centimeters) is present above the sludge. To use this technique, simply collect the desired amount of sample at the desired depth, and transfer it to the appropriate sample bottle. The oversight assistant should note, however, whether the sampling team performing sampling causes disturbances at the interface of the water and material. If no water layer is present, it is acceptable to remove the top several centimeters of material before collecting the sample (NUS Corporation, 1987).

A corer (Figure B-3) may be used to sample a solid or nearly solid material. Corers have an advantage over scoops because they can collect a sample that is equally representative of all depths of the material being sampled as they "punch" through the material. A sample should be collected with a decontaminated corer by pushing it evenly into the sludge to the desired depth. The sample is then retracted with a smooth, continuous motion. If the corer has a removable nosepiece, it should be removed after collecting the sample. The samples are then transferred directly to the sample bottles.

A gravity corer may be used to sample solid or nearly solid samples that are located at the bottom of a pond, lagoon, or impoundment or in a tank or other container. Gravity corers are similar to other corers except that they are designed for use under the surface of liquids at depths where a regular corer may not reach. They penetrate the sludge because of their weight rather than being physically pushed into the material. Gravity corers are fitted with a check valve at the top to allow the release of liquid while the corer is passing through the liquid layer. Plastic or brass inserts should be used to avoid contact between the sample and potentially incompatible material in the corer walls. The oversight assistant should also note the depth to which the corer is lowered and whether the corer is withdrawn smoothly to prevent sample loss.

A ponar dredge (Figure B-3) may also be used to sample under a layer of liquid. The sampler should be lowered, especially the last 1/2 meter above the surface, at a very slow rate to prevent disturbance of the surface. Once the surface is touched, the sampling team should release several more centimeters of sample line to allow the mechanism to release and close the clamshell. The sampler should be slowly raised to the surface and the sample transferred to sample bottles.

Sampling Liquid Sludges and Slurries

Liquid sludges and slurries in drums, other containers, or lagoons may be sampled by the use of a length of glass tubing. To collect a sample, the glass tube is slowly lowered into the drum or container, allowing the levels of liquid inside and outside of the tube to remain equal, until the tube just touches the bottom. The tube is then capped with safety-gloved thumb or stopper and removed from the drum or container. The lower end of the tube is placed in the sample container and the thumb or stopper is carefully and slowly removed to allow the material to flow into the sample bottle. The glass tube, with the permission of the RPM, may then be carefully broken and placed in the drum which it sampled. If lined tanks or lagoons were sampled using this technique, the glass tubing should be disposed of with other potentially hazardous materials. Glass samplers should be used with great care in lagoons with liners as the tube could damage the lining.

Open drums, other containers, or lagoons may also be sampled by the use of a composite liquid waste sampler (Figure B-10). To collect a sample, the sampler slowly lowers a decontaminated composite liquid waste sampler, in the open position, into the drum or container, allowing the levels of liquid inside and outside of the tube to remain equal, until the sampler just touches the bottom. The sampler tube is then pushed down to insert a stopper and close the tube. The entire sampler can then be slowly removed from the material being sampled; excess material should be wiped off as the tube is removed. The lower end of the sampler is placed in the sample container and the sampler is slowly opened, allowing the sample to flow into the sample bottle. Disposal options for the glass outer tube of the sampler are the same as for the glass tube sampler described above.

Containers or lagoons deeper than approximately 3 feet may be sampled by lowering, at a predetermined rate, a vacuum line from a peristaltic pump (Figure B-2). Without priming, this technique is limited to surface depths of 10 to 20 feet from the pump, and is not suitable for sampling for purgeable organic compounds since suction can strip volatile compounds. Alternatively, a submersible pump may be used to perform this sampling if it has been determined that the contents of the container will not react with the pump. To use these techniques, the sampler turns on the pump; then, the decontaminated Teflon sampling tube or, alternatively, the submersible pump, is lowered into the container or lagoon at a constant rate which will produce sufficient volume of sample. When the bottom of the container is reached, the pump is turned off, and the apparatus is withdrawn. If samples are desired only at certain depths, the sample tube or the submersible pump is lowered to that depth and turned on. The sample line is allowed to purge for a short time and then the sample is collected.

A weighted bottle sampler (Figure B-2) may also be used to sample large containers or lagoons. This sampler is used to obtain samples at discrete depths (usually at the top, middle, and bottom). This apparatus consists of a weighted glass bottle, a bottle stopper, and a sampling line for opening the bottle and for lowering and retrieving the sample bottle. The sampler should slowly lower the weighted bottle sampler into the material being sampled. Care must be taken not to tug on the sample line until the sampler is at the desired location. At that point, the sample line should be given a quick tug to unseat the cork and allow sample to enter the bottle. After several minutes, when the sample bottle is full, it should slowly be pulled to the surface. The outside of the sampler should be wiped or rinsed and allowed to drain to prevent contamination of the sample with materials collected at other depths. The sample may then be poured directly from the sampler to the sample bottles.

Like a weighted bottle sampler, the bacon bomb sampler is used to collect nonpurgeable samples at discrete depths. To use the sampler, both a sample line and a trip line must be attached to a previously decontaminated bomb. The bomb is then slowly lowered to the desired depth by the use of the sample line. At the desired depth, the trip line is pulled, allowing the bomb to open. After a few minutes, the trip line is released to seal the bomb. The bomb is then retrieved using the sample line. The outside of the bomb should be wiped or allowed to drain to prevent contamination of the sample with materials collected at other depths. The sample may then be transferred directly to the sample bottles.

A Kemmerer sampler or Van Dorn sampler (Figure B-1) is also useful in the collection of grab samples at discrete depths. To use a decontaminated Kemmerer or Van Dorn sampler, the mechanism is opened and the sample drain closed. The sampler is slowly lowered to the desired depth. The messenger weight is then placed on the sample line and released. Once the messenger weight falls and causes the sampler to close, the sampler should be slowly withdrawn. The outside of the sampler should be wiped or rinsed and allowed to drain to prevent contamination of the sample. The drain valve may then be opened and the sample transferred directly to the sample bottles. If the sampler has no drain valve, the top stopper should be lifted up and the sample poured directly into the sample bottle.

Field Analytical Techniques

Field analytical techniques for screening sludge and slurry samples include:

- Organic vapor detector;
- Calorimetric tubes;
- Combustible gas meter or explosimeter;
- Oxygen meter;
- Radiation survey meter;
- pH meter or pH paper;
- Thermometer;
- Inorganic compound detection kit/instrument; and
- Organic compound detection instruments.

Organic vapor detectors and calorimetric tubes may be used to detect volatile compounds emanating from the samples, and are discussed in detail in Section B.2.6 on soil vapor sampling. Combustible gas indicators, oxygen meters, and radiation survey meters are discussed in Section B.2.9 on ambient air sampling. The pH meters and pH paper, thermometers, inorganic compound detection kits/instruments, and organic compound detection instruments are discussed in detail in Section B.2.1 on surface water sampling.

B.2.8 Containerized Waste (Drums, Tanks, Hoppers, Bags, Waste Piles)

Containerized wastes are usually contained in drums, tanks, hoppers, bags, or other containers (metal, plastic, fiber, or cardboard) but may also be placed directly on the ground as in solid waste piles. Due to chemical degradation, chemical reactions with the atmosphere (including moisture), and gravitational settling and separation, the composition of the containerized waste may have changed over time and may vary within the body to be sampled. For this reason, the waste material may not be homogenous.

General Site and Waste Description

The oversight assistant should document and, if possible, photograph the condition of the containerized waste at the site. Items of concern include the presence of any identification markings on the containers; the number of tiers

of drums or other containers and approximate amount of material present; the general condition of the containers including the presence of openings, rust, leaks, overpacking; the presence of any protection from the environment (rain, wind, and runon/runoff); whether the containers are stored outdoors; public accessibility to the site; the presence of other waste materials at the site; and the presence of potential hazards to workers at the site.

The oversight assistant should note any abnormal vegetation conditions. Such conditions would include dead or stressed vegetation. These conditions are an indication of chemical contamination that might be due to leaking containers or previous waste handling practices.

Sampling Locations

The oversight assistant should verify that the locations for containerized waste sampling are those specified in the SAP or, if changed, are reasonable and consistent with the objectives of the sampling and analysis activities (see Section B.1.1). Sampling locations (approximate depth the sample was taken from, location within a waste pile) should be recorded.

If the containerized waste is in a drum, tank, bag, or waste pile, a single grab sample (or a composite sample that is representative of the contents of the containerized waste) is usually adequate (see Section B.2.8). If a thin layer of overlying liquid is present at the top of any containers, it is preferable to include a portion of this liquid with the container contents because it is representative of the actual sample and also will prevent drying or oxidation of the sample before analysis.

If the containerized waste is in a large tank or hopper, the number of samples to be taken will vary with the size and shape of the tank or hopper, as well as other factors such as the depth and homogeneity of the waste material. If the waste material is deep, grab samples may be collected at several depths and at various locations.

Waste may also be contained in piles directly on the ground. In this case, the sampling locations for the waste should be determined by the quantity and homogeneity of the waste material. For deeper deposits, grab samples should be collected at several depths and at various locations throughout the body of material. When the waste material has been placed directly upon the ground, sampling of the underlying soil and ground water may also be required to determine the extent of contamination.

Sampling Equipment

The sampling equipment must be chosen to preserve the integrity of the sample to yield a sample that is representative of the containerized waste found at the sampling location. The condition of the containerized waste, the viscosity of the sample, and the depth at which the sample will be collected will affect the sampling team's choice of sampling equipment. The sampling team should use stainless steel, glass, or Teflon-coated samplers to collect samples for trace organic compound analysis. Plastic, glass, or Teflon-coated samplers should be used to collect samples for trace metals analysis. The oversight assistant should verify that the sampling equipment is equivalent to that listed in the SAP and is suitable to fulfill the sampling requirements of the project.

For the purposes of this discussion, sampling equipment for containerized waste has been divided into: (1) sampling equipment for solid or nearly solid waste materials, and (2) sampling equipment for waste liquids.

Sampling Equipment for Solid or Nearly Solid Containerized Waste

Solid or semi-solid containerized waste materials includes materials such as dry powdered or granular material, hard materials such as solids, ores or slag, thick sludge, or tar or gelled liquids. When the containerized waste material to be sampled is solid or nearly solid, it should be sampled using soil sampling equipment or modifications of soil sampling equipment. If the sampling team intends to sample solid or nearly solid material, the team may use soil sampling equipment. This equipment includes: trowels, scoops, and spoons; corers; triers; and grain samplers. The use of this sampling equipment is discussed in Section B.2.4 on surface soil sampling.

Sampling Equipment for Containerized Waste Liquids

Containerized waste liquids may have a consistency ranging from that of water to that of thick mud. This waste material may contain suspended materials, some of which may have settled to the bottom of the container. The sampling team may collect waste liquids by using:

- Glass tube samplers;
- Composite liquid waste samplers;
- Bacon bomb samplers;
- Pumps;
- Weighted bottle samplers; and
- Kemmerer or Van Dorn samplers.

The use of glass tube samplers, composite liquid waste samplers, and bacon bomb samplers is discussed in Section B.2.7 on sludge and slurry sampling; the use of pumps is discussed in Section B.2.2 on groundwater sampling; and the use of peristaltic pumps, weighted bomb samplers, and Kemmerer or Van Dorn samplers is discussed in Section B.2.1 on surface water sampling.

Sample Type

Samples collected from containerized storage may range from liquids to solids with any combination of these present. Sealed drums may also contain trapped gases. Both grab and composite samples may be taken from containerized waste. However, due to possible suspended or settled materials in containerized waste and the typically high concentrations of chemicals present in the material, vertical composite samples are usually collected within each container or storage unit. In the cases of glass tube samplers or composite liquid waste samplers, a single grab sample is actually collected but it, in reality, is a composite of material represented at all depths in the container.

Sampling Technique

When sampling containerized waste, the sampling team should avoid spreading contamination (such as by minimizing splashing), overspilling, or transporting sample material away from the sample location. For example, contaminated sampling equipment should not be placed or dragged on the ground. The sampling team should place all contaminated equipment into plastic bags for

transfer to the decontamination area. If the sampling team is decontaminating sampling equipment between sampling locations, the team should take care to ensure the proper handling and disposal of all contaminated materials (see Section B.4.3).

If the containerized waste is in a drum or container that must be opened, the oversight assistant should ensure that all health and safety procedures are strictly enforced. Dermal or inhalation exposure to vapors, dermal exposure to splashed or spilled chemicals, and explosions or flash fires from drums that are not electrically grounded are all possible dangers. The contents of a sealed drum may also be under pressure. When dealing with unknown or extremely hazardous chemicals, the sampling team should use remote drum-opening equipment. For a detailed description of drum-opening equipment and techniques the oversight assistant should consult one of the following references:

- U.S. EPA, n.d., Drum Opening Techniques and Equipment, in Sampling at Hazardous Materials Incidents, U.S. EPA Training Manual, U.S. EPA, Cincinnati, Ohio.
- NUS Corporation, n.d., Drum Opening and Sampling, NUS Operating Guidelines Manual, Procedure No. 4.28.

Once opened, the sampling team should use an air monitoring instrument (such as explosimeter or a PID or FID) to determine the presence and nature of potentially hazardous atmospheres. The sampling team should approach the container from the upwind side. Based on this initial hazard assessment, it may be necessary to don more/better protective equipment, or even evacuate. The oversight assistant should consult the site HSP(s) for the appropriate action levels before arriving at the site. In addition, if hazardous atmospheres are encountered, the sampling team should try to identify the gases/vapors, and verify that the site health and safety plan has specified applicable and appropriate contingencies.

Sampling techniques are described below for both solid or nearly solid containerized waste materials and containerized liquids. These techniques relate to the sampling equipment listed in Section B.2.8.

Sampling Solid or Nearly Solid Containerized Wastes

The use of trowels, scoops, and spoons, and corers for sampling similar waste materials is discussed in Section B.2.7 and should be referred to by the oversight assistant.

The sampling team may also sample solid or semi-solid (nonliquid) material with a trier (Figure B-8). A sample is collected with a decontaminated trier by inserting it into the waste material and rotating it for several rotations. If the material to be sampled is dry and free flowing, the trier should be used in a horizontal or nearly horizontal position. If the material is moist and sticky, the trier may be used at any angle as long as the sample is not lost when the sampler attempts to retrieve it. The trier should then be slowly withdrawn with the slot facing upward.

The sampling team may use a grain sampler or grain thief (Figure B-8) to sample dry powdered or granular waste materials. A grain thief consists of two concentric tubes that can be rotated to align openings in both tubes, allowing sample to be collected or further rotation to close the openings. The

sampling team member performing sampling should close the outer tube and insert a decontaminated sampler into the material to be sampled. The grain thief works best if inserted at an angle but it may also be inserted vertically. The team member should rotate the inner tube of the sampler to the open position and wiggle or shake the grain thief several times to help material enter the device. The sampler should then be closed and withdrawn. The sampling team member should then carefully remove the outer tube and transfer the sample directly to the sample bottles.

Sampling Containerized Liquid Materials

Techniques for the use of glass sampling tubes, composite liquid waste samplers, pumps, weighted bottle samplers, bacon bomb samplers, and Kemmerer and Van Dorn samplers for sampling similar liquid waste materials are discussed in Section B.2.7, to which the oversight assistant should refer.

Field Analytical Techniques

Field analytical techniques appropriate for screening containerized materials include:

- Organic vapor detectors;
- Colorimetric tubes;
- Combustible gas indicator or explosimeter;
- Oxygen meter;
- Radiation survey meter;
- pH meter or pH paper;
- Conductivity meter;
- Thermometer;
- Inorganic compound detection kit/instrument; and
- Organic compound detection instruments.

Organic vapor detectors and colorimetric tubes may be used to detect volatile compounds emanating from the samples, and are discussed in detail in Section B.2.6 on soil vapor sampling. Combustible gas indicators, oxygen meters, and radiation survey meters are discussed in Section B.2.9 on ambient air sampling; pH meters and pH paper, conductivity meters, thermometers, inorganic compound detection kits/instruments, and organic compound detection instruments are discussed in detail in Section B.2.1 on surface water sampling.

B.2.9 Ambient Air

There are two similar but distinct types of collection activities for ambient air. The first of these is air monitoring; the second is air sampling. Both air monitoring and air sampling are used to detect the presence of volatile organic chemicals that have high vapor pressures and thus exist as a vapor or gas in the atmosphere. These techniques may also be used to detect other organic

chemicals, radiation, or radioactive chemicals such as radon, mercury and other volatile inorganics, metals, and airborne particulate matter.

Air monitoring can be defined as the "real time" or immediate collection and analysis of air samples. Air monitoring is typically used to alert workers or others of immediate dangers from unexpected chemicals, chemical releases, or high dust/particulate levels. Air monitoring usually yields qualitative results.

Air sampling is the collection of air samples, usually for analysis at a later time, and usually yields quantitative results. The type of information obtained from air sampling (as opposed to air monitoring) is usually used to identify and quantify the normal releases from the site. The results of air sampling may be used to perform exposure and risk assessments or to quantify actual releases.

Sampling Locations

Air monitoring may be performed at predetermined geographic locations. More commonly, however, air monitoring is performed at activity-related locations such as at a well head, in the breathing zone of the workers, near a split spoon sampler as it is opened, in the vicinity of drum-opening activities, or in the vicinity of excavation of potentially contaminated areas. Areas of potential exposure are usually determined in the field and may not be specified in the SAP. The SAP, however, should indicate the types of activities that require air monitoring and the chemicals or hazards that should be monitored. This monitoring is used to alert workers, as well as residents in the immediate area, of possible dangers that may result in an evacuation.

Air sampling is usually designed to sample emissions from an entire site or a specified area of a site. The sampling team will typically establish sampling locations both upwind (background air) and downwind of this area. Samples are usually collected at 1.5 or 2 meters above ground, which is approximately the human breathing zone (U.S. EPA, 1987a).

Sampling locations for air sampling should be specified in the SAP. The oversight assistant should note the actual locations and check to see if they are consistent with the locations listed in the SAP. The oversight assistant should evaluate whether changes in sampling locations are "reasonable and consistent" with the sampling objectives. All information pertinent to the location of each monitoring or sampling location should be recorded. The agreement between the actual monitoring locations and those specified in the SAP should also be noted.

General Background Conditions

Knowledge of background conditions is critical for air monitoring and air sampling. Background conditions include meteorological conditions (such as wind speed, wind direction, temperature, or rain fall) for the area. It is important to know the direction of prevailing winds in the area to be sampled or monitored to be able to determine which direction is upwind and which is downwind. This information can usually be obtained for a variety of reporting periods from the nearest airport with a Federal weather station.

It is also necessary to be able to separate any concentrations of pollutants in the background air from those arising from the site or activities at the site. If air is being monitored in an area where drums are being opened and this area is surrounded by chemical plants, it is important to know which pollutants are

coming from which source. In this case, additional background monitoring would be necessary.

Sampling Equipment

The sampling team should use air sampling and monitoring equipment that will preserve the integrity of the sample and thus yield a sample that is representative of air found at the sampling or monitoring location. The oversight assistant should verify that the actual monitoring and the sampling equipment is consistent with the equipment listed in the SAP. To minimize reactions or contamination, the sampling team should use clean glass, Teflon, or stainless steel equipment for air sample collection and storage. Although air monitoring equipment is usually constructed of these materials, the requirements for air monitoring are less rigid as the sample is usually analyzed immediately.

Air Monitoring Equipment

The choice of monitoring instruments depends upon the potential hazards encountered at the site. When monitoring volatile organics in the air, the sampling team will usually use a self-contained, battery-powered organic vapor detector such as an FID or PID (see Section B.2.6). Combustible gas indicators or explosimeters will be used to detect levels of organics that are potentially explosive. Oxygen meters will detect dangerously low oxygen levels. Radiation survey meters detect high levels of radiation.

The sampling team may also use colorimetric tubes for air monitoring (see Section B.2.9). Colorimetric tubes are frequently referred to as MSA or Draeger tubes. Colorimetric tubes are available that are sensitive to a variety of chemicals at various concentrations (NUS Corporation, 1987; U.S. EPA, 1987a).

Results obtained from air monitoring equipment can usually be characterized as qualitative or useful for screening purposes only. If potential hazards are detected, the sampling team may need to perform more quantitative air sampling to determine actual levels of contamination.

Air Sampling Collection Equipment for Organic Vapors

Air samples are usually collected by pumping air into a sample container such as a Teflon bag, by drawing it through a sampling tube containing an adsorbent, or by introducing it directly to an analytical instrument. Probes, air lines, pumps, and any storage containers or equipment should, whenever possible, be constructed of glass, Teflon, or stainless steel to minimize possible reactions or contamination (U.S. EPA, 1987a).

When sample storage or preservation is required prior to analysis, several types of storage are available. One of these involves the collection of air in a portable container for analysis later in a laboratory. Alternatively, the air sample may be collected and analyzed in the field by analytical instrumentation. Another type of storage technique involves the sorption of the chemicals in the air sample onto an adsorbent material such as activated carbon or commercially available adsorbent resins such as Tenax. The activated carbon or resins are then sent to the analytical laboratory for extraction and analysis.

Air sampling equipment is also available for chemicals other than volatile organic compounds. As it is less common to sample for other chemicals or

materials such as particulate matter or radiation, the appropriate manuals for this equipment should be reviewed.

Sample Type

There are two types of air samples which may be collected. These include grab samples, and composite or continuous samples. Grab samples are samples taken at a single location at a single time. Samples collected over a short time period, such as several minutes, are still considered grab samples. A sample collected during the opening of a drum would be considered a grab sample. Composite samples may be either combined grab samples from different locations or samples collected at different times and then composited. Continuous samples are a type of composite air sample that is collected continuously over a predetermined period. A particulate sample collected over a work day would be considered a composite or continuous sample. Both air monitoring and air sampling activities may be performed as either grab or continuous sampling.

Sampling Technique

The sampling techniques for both air monitoring and air sampling are discussed in the following sections.

Air Monitoring

The sampling team may perform air monitoring with dedicated instruments or by the use of colorimetric tubes. Dedicated monitoring instruments contain a sampling probe or sampling system, an analysis system, and a direct readout. Some also contain a warning system that sounds an alarm to signify dangerous levels. The battery in the unit must be charged and most instruments must be calibrated before use. As calibration and use are fairly complex, the oversight assistant should refer to the manuals supplied with this equipment. Typically, a calibrated instrument is turned on and continually carried by one or more workers on each sampling team while work is being performed. Background as well as all monitoring readings should be recorded. The use of colorimetric tubes is described in Section B.2.6.

Air Sampling

Air samples are usually collected at the established sampling location by pumping air either into a sample container such as a Teflon bag, by drawing it through a sampling tube containing an adsorbent, by drawing it through a filter, or by introducing it directly to an analytical instrument. Probes, air lines, internal pump surfaces, and any storage containers or equipment should, whenever possible, be constructed of glass, Teflon, or stainless steel. If samples are collected and must be preserved for subsequent analysis, they should be appropriately labelled and stored (see Sections B.3 and B.4) (U.S. EPA, 1987a).

The oversight assistant should check that the sampling team runs the system for sufficient time to allow standing air to purge from the system before sampling. This length of time depends upon the internal volume of the system, including the probe, sample line, and pump, as well as the pumping rate of the pump. Once the system is adequately purged, the sample may be collected. A purging time of approximately 5 minutes with a pumping rate of 4 liters per minute is usually adequate to purge most systems.

Field Analytical Techniques

Field analytical techniques for screening ambient air include:

- Organic vapor detectors;
- Colorimetric tubes;
- Combustible gas indicators or explosimeters;
- Oxygen meters; and
- Radiation survey meters.

Organic vapor detectors and colorimetric tubes are described in detail in Section B.2.6 on soil vapor sampling.

Combustible Gas Indicator or Explosimeter

A combustible gas indicator, also known as an explosimeter, determines the concentration of organic vapors present in the air as a percentage of the lower explosive limit of the gas used for calibration of the instrument. The lower explosive limit is the lowest concentration of an organic vapor that will burn or explode at room temperature in air that contains a normal amount of oxygen (O_2) when an ignition source is introduced. This instrument must be calibrated frequently. The combustible gas meter works only when the air being sampled contains 19.5 percent to 25 percent oxygen. Many chemicals, such as those containing silicon, acids, and leaded gasoline, cause interferences. Combustible gas indicators are usually used with oxygen detectors and some manufacturers offer both in the same instrument. This instrument may be calibrated and then allowed to continuously monitor the environment where work is being performed. Some models contain an alarm that sounds when adverse conditions arise.

Oxygen Detector

An oxygen detector measures the percent of oxygen in the air by means of a galvanic cell. Oxygen detectors are frequently combined with explosive gas meters and referred to as LEL/O_2 meters. Acid mists will ruin the probe. When used at elevations significantly above sea level the meter will read low, relative to sea level calibration, due to atmospheric pressures of less than 1 atmosphere. When used in the presence of strong oxidizers, the meter may read high. This instrument may be calibrated and then allowed to continuously monitor the environment where work is being performed. Some models contain an alarm that sounds when adverse conditions arise.

Radiation Survey Meter

Radiation survey meters are available to monitor for alpha, beta, and gamma radiation. A meter which measures all three of these types of radiation is desirable, as is a model which contains an alarm which sounds when dangerous levels of radiation are encountered.

B.3 COMMON SAMPLING ACTIVITIES

Regardless of the medium sampled, a number of activities and considerations are important for proper handling and preservation of the sample until it is shipped for analysis. The sample should be placed in a suitable container, in sufficient volume, and if necessary, filtered or mixed with preservatives so that when analyzed, the sample is representative of the medium sampled. In

addition, sample labels, sampling records, and chain-of-custody documentation should be adequately, completely, and correctly maintained, as they could be used as evidence during litigation. Failure to take steps to ensure sample representativeness and accountability can render sample collection and subsequent analysis meaningless.

B.3.1 Containers

Sample containers should be of a suitable material that is chemically compatible with the sample; that is, they should not contaminate or degrade the sample. The container should also hold a volume of sample sufficient to perform all required analyses. Thus, the choice of containers depends upon the analysis required. In addition, containers should be free of contaminants before use.

Container Type

The most important factors in container selection are chemical compatibility and volume. Containers should not degrade, react, leach, or leak as a result of contact with the sample. It is therefore important to have some idea of the composition of the sample. The SAP should refer to the specific analytical method in "Test Methods for Evaluating Solid Waste-Physical/Chemical Methods" (SW-846) (U.S. EPA, 1986) that designates an acceptable container for the specific type of analysis. The selection of containers, lids, and linings should be coordinated with the laboratory, which may specify a particular container for certain analyses.

Plastic and glass containers are generally used for sample collection. Glass containers are relatively inert to most chemicals and can be used to collect almost all hazardous material samples. (Two exceptions are strong alkali solutions and hydrofluoric acid.) When organics are the analytes of interest, glass bottles with fluorocarbon resin-lined (Teflon-lined) screw-on caps should be used (U.S. EPA, 1986a).

When metals are the analytes of interest, fluorocarbon resin (Teflon) containers, glass containers with Teflon-lined screw-on lids, or polyethylene containers with polypropylene screw-on lids should be used (U.S. EPA, 1986a). Fluorocarbon resin containers are the most inert and thus have the widest range of application. Polypropylene, polycarbonate, and polyvinyl chloride are also commonly available plastic containers, and should be used only when the constituents of the sample are known not to react with plastic. Plastic bottles are usually provided with screw caps made of the same material as the bottles; liners are usually not required. Table B-1 summarizes the types (and sizes) of bottles recommended for each type of sample (U.S. EPA, 1987a). The choice of container size depends upon the required analyses. The volume of sample collected should be sufficient to perform all required analyses with an additional amount collected (if required by the lab or the sampling plan) to provide for quality control needs, split samples, or repeat examinations. (Usually, 40 mL, VOA vial samples are collected in replicate pairs to provide additional sample material for the laboratory in case one sample is not properly extracted.) The sample volume required for each analysis is the volume of the appropriate container less the ullage (head space) required for sample mixing by the lab. Generally, at least 10 percent ullage should be allowed in every sample container, except for samples containing volatile organics or dissolved gases, which should have no head space (U.S. EPA, 1986c).

Table B-1. Sample Bottles Recommended by Sample Type

CONTAINER DESCRIPTION	SAMPLE TYPE
8-oz amber glass bottle with Teflon-lined black phenolic cap	Extractable organics--Low-concentration water samples
40-mL glass vial with Teflon-lined silicon septum and black phenolic cap	Volatile organics--Low- and medium-concentration water samples
1-liter high-density polyethylene bottle with white poly cap	Metals, cyanide--Low-concentration water samples
120-mL wide-mouth glass vial with white poly cap	Volatile organics--Low- and medium-concentration soil samples
16-oz wide-mouth glass jar with Teflon-lined black phenolic cap	Metals, cyanide--Medium-concentration water samples
8-oz wide-mouth glass jar with Teflon-lined black phenolic cap	Extractable organics--Low- and medium-concentration soil samples
	Metals, cyanide--Low- and medium-concentration soil samples
	Dioxin--Soil samples Organics and inorganics--High-concentration liquid and solid samples
4-oz wide-mouth glass jar with Teflon-lined black phenolic cap	Extractable organics--Low- and medium-concentration soil samples
	Metals, cyanide--Low- and medium-concentration soil samples
	Dioxin--Soil samples
	Organic and inorganic--High-concentration liquid and solid samples
1-liter amber glass bottle with Teflon-lined black phenolic cap	Extractable organics--Low-concentration water samples
32-oz wide-mouth glass jar with Teflon-lined black phenolic cap	Extractable organics--Medium concentration water samples
4-liter amber glass bottle with Teflon-lined black phenolic cap	Extractable organics--Low-concentration water samples

Container Condition

Besides specifying the container type, the SAP should specify the procedures used to ensure that sample containers are free of contaminants prior to use. Sample containers obtained from reputable vendors (such as I-Chem, Eagle-Picher, or Environmental Sampling Supply) have been specially precleaned and are generally suitable for use without further cleaning. For sample containers not certified clean by the vendor (or optionally for trace contaminant sampling) the containers, lids, and liners should be washed with a nonphosphate detergent, rinsed in tap water, and rinsed in distilled water (i.e., water having a conductivity of less than 1 μmho/cm at 25°C). In addition, if the containers are to be used for organic analysis, they should have a final rinse of spectrographic grade solvent, such as hexane or methanol (U.S. EPA, 1986a; IT, 1987). Alternatively, for sample containers for metals analysis, a 1:1 (acid:water) nitric acid rinse and 1:1 hydrochloric acid rinse may precede the tap water and distilled water rinses, respectively. The cleanliness of sample containers, pre-cleaned or cleaned, may be verified by bottle blanks.

B.3.2 Labels/Tags

Sample container labels and tags are documents that identify and inventory samples. Labeling procedures and information are not only important for preventing misidentification of samples, but also are accountability documents, forming part of the sampling records. As such, sample labels and tags may be used as evidence in litigation. Therefore, it is essential that sample labels and tags are adequately, completely, and correctly filled out and affixed to the proper sample container.

Labeling Procedure

Labels or tags should be firmly affixed to the sample container. Labels are gummed and may be preattached (as for sample bottles from the Superfund repository) or affixed in the field. The container should be dry enough to securely attach the label. Alternatively, sample tags may be attached to the sample container if gummed labels are not available or applicable. Tags are often preferred for handling extremely contaminated samples because the sample container must often be decontaminated before packing and shipping. Use of tags obviates container contamination/ decontamination problems.

Labels and tags should be filled out using waterproof ink (no felt tip pens) so they remain legible even when wet. To minimize the handling of sample containers, labels and tags may be filled out prior to sample collection. If filled out prior to sampling, care should be taken to affix the correct label or tag to the proper sample container. If possible, one member of the sampling team should fill out the tags or labels while another member does the sampling (U.S. EPA, 1986c).

Sample tags or labels are distributed as needed to field personnel by the field supervisor (or designated representative). Personnel are accountable for each tag assigned to them until it has been filled out, attached to a sample, and transferred to another individual, along with the corresponding chain-of-custody. Tags (or labels) bearing EPA serial numbers should not be discarded as they are accountable documents. Lost, voided, or damaged tags should be noted in the field logbook.

Labeling Nomenclature/ Information

Sample labels or tags should, at a minimum, include the following information:

- Serial number -- The first digit (or digits) of the serial number should correspond to the EPA Region where the site is located (see Figure B-8);
- Sample identification number or station number -- A unique identifying number assigned to a specific sampling point and listed in the SAP. (The number for a blind duplicate should not infer that the sample is a duplicate);
- Name of Collector -- Including his/her signature;
- Date and time of collection -- The date is a six-digit number indicating month/date/year; time is a four-digit number using the 24-hour clock notation;
- Place of collection or station location -- The location or station description (for example, well No. 5) as specified in the SAP (more than one sample, each with a unique identification number, may be collected from the same location);
- Analysis -- The type of analysis requested; and
- Preservative -- Whether a preservative is used and the type of preservative.

Additional information that should be included, but is not required, are the contractor project code number, a lab sample number (reserved for lab use), and any information such as split samples, special analytical procedures, and CLP case or sample numbers (if appropriate). Figure B-11 illustrates an example of a sample tag.

B.3.3 Preservation/Handling

Once the sample has been collected, chemical and biological changes can occur, altering the composition and thus the representativeness of the sample. For example, the pH may change significantly in a matter of minutes, sulfides and cyanides may be oxidized or evolve as gases, and hexavalent chromium may slowly be reduced to the trivalent state. In addition, certain cations, such as iron and lead, may be lost to adsorption on the walls of the sample containers, microorganisms may grow in certain constituents, or volatile compounds may be lost. For best analytical results, samples should therefore be analyzed as soon as possible after collection. If samples are not immediately taken to a laboratory they should be filtered or preserved and stored such that these changes are retarded or prevented until the sample reaches the laboratory.

Sample Filtering

Filtering may be recommended for the inorganic analysis of samples because acid, used either as a preservative or during analysis, can release inorganic constituents held on suspended solids (thereby changing the constituent chemistry of the solution). However, filtered samples may not be acceptable for risk assessment purposes since <u>total</u> metal analysis requires unfiltered samples. Thus, collected samples for metal (inorganic) analysis should either be acid-preserved without filtering, or split into two portions: one portion

Figure B-11. Typical Sample Identification Tag

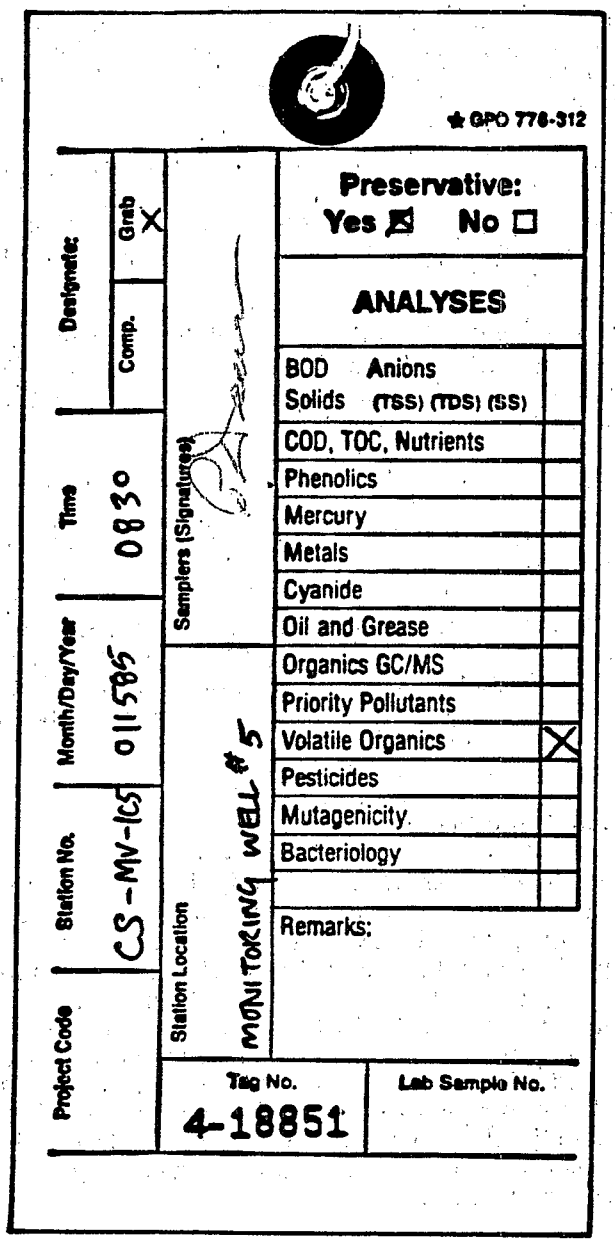

Region 4 Sample Tag

Note: The obverse side of the sample tag bears and EPA logo and the appropriate regional address.

acid preserved without filtering, the second portion filtered before the addition of acid preservative (resulting in a sample that contains only the dissolved constituents).

Filtration through a 0.45-micron membrane filter is the most common field method to remove suspended solids. For extremely turbid samples, large particles can be removed with a coarse filter before the 0.45 micron filter is used (U.S. EPA, 1987a). Samples for analysis of organic compounds should never be filtered as many organic constituents adhere to suspended solids (U.S. EPA, 1986a,c).

Sample Preservatives

Methods of sample preservation are relatively limited and are intended generally to: (1) retard biological action, (2) retard hydrolysis of chemical compounds and constituents, (3) reduce constituent volatility, and (4) reduce sorption effects. Preservation methods are generally limited to pH control, chemical addition, refrigeration, and protection from light. The oversight assistant should refer to "Test Methods for Evaluating Solid Waste -- Physical Chemical Methods" (SW-846) (U.S. EPA, 1986) for the specific preservation method that should be used for the constituent in the sample.

Samples requiring analysis for volatile, semivolatile, and nonvolatile organics (including pesticides) should be refrigerated or iced (4°C). Low-concentration or environmental water samples (contaminants less then 10 ppm) should be acidified until the pH is less than 2 with 2 mL (1+1) of nitric acid. Cyanide samples should be preserved with sodium hydroxide to a pH greater than 12, iced, and if oxidizing agents are present (as indicated with potassium iodide-starch test paper) mixed with 0.6 g of ascorbic acid per liter of sample. Table B-2 summarizes sample preservative techniques used for some common analyses (U.S. EPA, 1986a).

[In addition, it has recently been demonstrated that a 1:1 methanol to soil ratio (volume to weight) significantly decreases volatile loss for soil samples (U.S. EPA, 1991). Methanol may soon become a required preservative for soil volatile samples.]

Oversight assistants should note that region-specific variances in sample preservation exist. For example, Region IV requires that samples collected for volatile analysis be preserved with hydrochloric acid. Specifically, four drops of concentrated HCl are added to each VOA vial before it is filled with sample (U.S. EPA, 1987a). Region-specific variances may become dated; the sampling team should contact the EPA or the RPM regarding regional practices or requirements before writing the SAP.

Not all samples require preservation, including soil or sediment samples and medium-and-high concentration water samples (10 ppm to 150,000 ppm contaminant and greater than 150,000 ppm, respectively), although in practice, all samples are usually iced -- particularly volatile soil samples. The addition of preservative to samples whose constituents are unknown should generally not be practiced because of the possibility of an adverse chemical reaction between the preservative and the sample. Preservatives may not only alter the physical and chemical composition of a sample, but also may be highly reactive and hence unsafe.

Table B-2. Sample Preservation Procedures

Analysis	Cooled to 4 Deg. C	Field Acidified to pH <2 With Nitric Acid	Field Acidified to pH <2 with Sulfuric Acid	Field Acidified to pH <2 with Sulfuric Acid or Hydrochloric Acid	Preserved with 1ml of 1.1 M Sodium Sulfite	Preserved with Sodium Hydroxide to pH >12	pH Adjustment to be Between 6 and 8 with Sodium Hydroxide or Sulfuric Acid
TOC	X			X			
TOX	X				X		
Chloride	X						
Phenols	X		X				
Sulfate	X						
Nitrate	X						
Pesticides/Herbicides	X						X
Colifora Bacteria	X						
Cyanide	X					X	
Oil and Grease	X		X				
Volatile, Semi-Volatile, and Non-Volatile Organics	X						
Iron		X					
Manganese		X					
Sodium		X					
Total Metals		X					
Dissolved Metals		X					
Radium		X					
Gross Alpha		X					
Gross Beta		X					

Sample Storage

Metals samples and samples not requiring preservation, such as soil samples, do not require special handling or storage. However, such samples should be stored in a safe and secure manner to prevent disturbance and contamination. Samples requiring cooling to 4°C should be refrigerated or kept on ice in a cooler. For information on storage requirements for sample shipment, see Section B.4.1.

B.3.4 Chain-of-Custody Information

Chain-of-custody records and sample traffic reports allow sample tracking and provide a permanent record for each sample collected. Proper completion of chain-of-custody information is important to help ensure sample quality during collection, transportation, and storage for analysis.

Chain-of-Custody Record

An adequate chain-of-custody record allows tracing of possession and handling of individual samples from the time of field collection through laboratory analysis. The chain-of-custody record should be included in the shipment of each sample and should contain the following information:

- Sample number;
- Signature of collector;
- Date and time of collection;
- Sample station location;
- Number of containers;
- Signatures of people involved in the chain of possession; and
- Inclusive dates of possession.

Figure B-12 shows a sample chain-of-custody record. The original chain-of-custody form accompanies the sample shipment, while the copies are retained by the sampling team. When samples are split, the event should be noted in the "Remarks" section of the chain-of-custody record. The oversight team should complete a separate chain-of-custody record for custody and shipment of the split samples.

Generally, as few people as possible should handle the samples to minimize the possibility of disputed or unclear custody. Frequently, one person is designated to be responsible for sample custody. Field personnel in possession of the samples are personally responsible for the care and custody of the samples until the sample is transferred or dispatched properly. A sample is in someone's "custody" if:

- It is in one's actual possession;
- It is in one's view, after being in one's physical possession;
- It is in one's physical possession and then locked up so that no one can tamper with it; and

Figure B-12. Chain-of-Custody Record

ENVIRONMENTAL PROTECTION AGENCY
Office of Enforcement

REGION 3
Curtis Bldg., 6th & Walnut Sts.
Philadelphia, Pennsylvania 19106

CHAIN OF CUSTODY RECORD

PROJ. NO.	PROJECT NAME					NO. OF CON-TAINERS							REMARKS
SAMPLERS: *(Signature)*													
STA. NO.	DATE	TIME	COMP	GRAB	STATION LOCATION								

Relinquished by: *(Signature)*	Date / Time	Received by: *(Signature)*	Relinquished by: *(Signature)*	Date / Time	Received by: *(Signature)*
Relinquished by: *(Signature)*	Date / Time	Received by: *(Signature)*	Relinquished by: *(Signature)*	Date / Time	Received by: *(Signature)*
Relinquished by: *(Signature)*	Date / Time	Received for Laboratory by: *(Signature)*	Date / Time	Remarks	

Distribution: Original Accompanies Shipment; Copy to Coordinator Field Files

3-23022

- It is kept in a secured area, restricted to authorized personnel only.

When transferring samples, the individuals relinquishing and receiving them should sign, date, and note the time on the form.

Traffic Reports

If a CLP laboratory is used for sample analysis, sample traffic reports are required to provide a permanent record for each sample collected (US EPA, 1987a). Sample traffic reports are four-part carbonless forms printed with a unique sample identification number. The sampling team should complete a traffic report for each sample. The report should include the following information: site name and location, type of laboratory analysis requested, date of sample collection, and shipment and classification of sample concentration. The number of containers and the total volume of each container should also be entered for each analytical parameter. The oversight assistant should refer to the CLP guidance (EPA, 1986b) for detailed guidance on traffic reports.

B.4 POST-SAMPLING ACTIVITIES

Post-sampling activities include packaging and shipping samples and decontaminating them after they are collected in the field. The procedures, methods, and requirements for these activities are described in the following sections.

B.4.1 Packaging

Following collection and preservation of samples in the field, the samples are packaged for shipment to the laboratory. Packaging the samples involves following standard procedures to ensure that the samples arrive at the laboratory intact; that is, without breakage, leakage, or spoiling. The oversight assistant should follow the procedures described in this section for packaging oversight samples (see Section B.5) and should also observe the sampling team members to check their packaging methods. The following section describes the methods and materials recommended by EPA's Sample Management Office for packaging samples.

Methods

EPA's Sample Management Office recommends specific packaging methods based on classification of the samples as either: 1) low-concentration samples, 2) medium-concentration samples, or 3) high-concentration samples. This classification is based on the expected or estimated contaminant concentration of the sample as determined by the field supervisor. The following definitions should be used to aid in sample classification (U.S. EPA, 1987):

- Low-concentration sample -- The contaminant of highest concentration is present at less than 10 ppm;
- Medium-concentration sample -- The contaminant of highest concentration is present at a level greater than 10 ppm and less than 15 percent (150,000 ppm); and
- High-concentration sample -- At least one contaminant is present at a level greater than 15 percent. Samples from drums and tanks are assumed to be high-concentration unless available information indicates otherwise.

If the expected contaminant concentration is unknown, the sample should be handled as a high-concentration sample.

The packaging requirements for the medium- and high-concentration sample classifications build on the requirements for packaging low-concentration samples. Therefore, this document first describes the packaging methods common to all classifications and then describes the remaining methods specific to medium- and high-concentration samples. The following packaging method should be used for all sample classifications:

- A sample tag should be attached to each sample container;
- All bottles except volatile organic analysis (VOA) vials should be taped closed;
- VOA vials should be wrapped with paper and sealed in plastic bags. One pair of VOAs should be placed in each bag. (Generally, VOA samples are collected in pairs to provide an extra sample for the laboratory in case one is not extracted properly). The plastic bags should be packed and sealed in another sample container such as a clean paint can, marked with directional arrows indicating which way is "up;"
- Each sample container (except for paint cans for VOA samples) should be sealed in a plastic bag, squeezing as much air as possible from the bag;
- The sample containers should be placed in a lined, insulated shipping container (such as an ice chest) and surrounded with packing material (at least 1 inch of packing material in the bottom). See Section B.4.1 for a description of acceptable packaging materials;
- The appropriate refrigeration agents should be placed in the shipping container (see Section B.3.3);
- The lining of the shipping container should be sealed shut;
- The paperwork for the laboratory, such as chain-of-custody forms and traffic reports (see Section B.4), should be sealed in a plastic bag and taped to the inside lid of the shipping container;
- The shipping container should be locked or taped shut;
- At least two signed custody seals (see Section B.4.2) should be placed on the shipping container, one on the front and one on the back. Additional seals may be used if necessary; and
- The shipping container should be personally handed over to the carrier (usually an overnight carrier).

For packaging medium and high-concentration samples, the following steps should be followed instead of, or in addition to, those mentioned above.

- Each sample container should be sealed in a plastic bag and packed in a clean paint can or similar container before being placed in the shipping container;

- Even though sample containers should be individually wrapped in plastic bags when packaged, samples of high contaminant concentration should be shipped in a dedicated cooler to prevent the possibility of contaminating samples with low contaminant concentration;

- Each paint can or similar container should be marked with the appropriate Department of Transportation (DOT) shipping information (see Section B.4.2) and packed in the shipping container;

- Each shipping container should be marked with the appropriate DOT shipping information (see Section B.4.2); and

- Each shipping container should be sent with a restricted-article airbill (see Section B.4.2).

Materials

EPA's Sample Management Office recommends specific materials for packaging samples for shipment to the laboratory. The primary function of the packaging materials is to protect the sample containers from leakage, breakage, and spoiling. EPA recommends the following materials for packaging samples:

- Shipping containers -- EPA recommends using hard plastic or metal picnic coolers. The cooler provides a sturdy container for shipment to prevent breakage of sample containers and provides an insulated vessel for keeping samples refrigerated with ice (to prevent spoiling). The coolers can be any size, although the sampling team should beware of very large coolers, as they are heavy when filled with samples, ice, and packing materials. Aside from the obvious problem in moving the heavy container, most commercial carriers will not accept a package heavier than 100 pounds for standard delivery. As a guideline, a 15-gallon cooler filled with samples, ice, and packing material will probably weigh close to 100 pounds;

- Shipping container liners -- EPA recommends using a plastic bag such as a trash bag. Plastic bags can be sealed easily with electrical tape and will contain leaks and spills from sample containers if they occur inside the bag. Otherwise, a leak or spill could seep out of the cooler. Similarly, ice (used as a preservative) can be contained in a plastic bag to prevent leakage as ice melts;

- Packing material -- EPA recommends using asbestos-free vermiculite to protect sample containers from breakage. Perlite, styrofoam beads, or bubble-wrap for individual samples may also be used but are not water-absorbent. These materials are used for absorbing any impacts and keeping sample containers from jostling during shipment;

- Paint cans -- EPA recommends using clean paint cans for storing medium- and high-concentration samples to keep samples isolated from each other. In case of leakage or breakage, this would prevent contaminants from mixing and reacting with each other in the shipping container; and

- Paperwork packaging -- EPA recommends placing the chain-of-custody and traffic reports in plastic bags to keep the papers dry in case of breakage or leakage from sample containers or melting ice.

Other Prescribed Specifications

Other prescribed specifications may apply to sample packaging, depending on the specific types of samples collected. The sampling team should investigate special packaging requirements by discussing suspected contaminants with the laboratory that will do the analysis as well as with the sample carrier. For example, dioxin samples or samples suspected of containing dioxin contamination should be labeled as such and packaged as if they were high-concentration samples (including DOT shipping requirements). Laboratory personnel should be notified in advance that a dioxin sample is being shipped so they can make arrangements for receiving and analyzing the sample. In addition, it is important to notify laboratories of suspected contamination because some laboratories are not equipped to handle the analysis of certain samples (such as dioxin).

B.4.2 Shipping

Once the sample containers have been packaged, they are ready for shipment to the laboratory. Standard procedures for shipping samples should be followed to: ensure timely shipment to the laboratory, document possession of the samples, ensure that the laboratory is prepared to receive the samples, and comply with DOT regulations. The oversight assistant should follow these procedures for shipping oversight samples and should also check the sampling team's shipping procedures for all samples.

Timely Shipping

Timely shipping is critical to maintaining the integrity (original volume and composition) of the samples collected in the field. Samples should be analyzed as soon as possible after sampling. If samples are analyzed in the laboratory (rather than in the field), they must be analyzed within designated holding times for the specific sample media and contaminants of concern, or the composition of the samples can change. EPA's Sample Management Office mandates the following laboratory holding times for some common samples:

	Water	Soil	Sediment
VOA	14 days	10 days	10 days
Base Neutrals/ Acids	5 days	10 days	10 days
Pesticides	5 days	10 days	10 days
Cyanides	14 days	14 days	14 days

The holding time is measured from the time the sample is received by the laboratory (not shipped) until the time the sample is extracted for analysis. Additionally, the samples must meet technical holding times as specified in the Federal Register. The technical holding times (which include the laboratory holding times) are longer than the laboratory holding times to allow time for shipping. Detailed information regarding holding times for other samples is described in the "User's Guide to the Contract Laboratory Program" (U.S. EPA, 1986b).

In order to allow the laboratory adequate time to analyze the samples within the designated technical holding times, the samples must be shipped promptly. Samples should be shipped the same day as collected, usually for next-day

delivery. Even if the holding time is not likely to be exceeded, samples should not be collected on a Friday or Saturday unless special arrangements have been made with the laboratory to receive the sample on Saturday or Sunday. Additionally, the sampling team should check with the carrier before collecting samples on a Friday or Saturday to ensure that the carrier provides overnight delivery on weekends. This step is important for ensuring that custody of the samples is maintained and that samples are kept refrigerated until they are received by authorized personnel at the lab (ice will not last more than a few days, even in a cooler). Similarly, samples should not be collected the day before a holiday unless special arrangements have been made with the carrier and the lab.

Copies of Chain-of Custody Form to Laboratory

The chain-of-custody record allows tracing of the possession and handling of samples from the time of collection through laboratory analysis. All sample shipments to the laboratory should be accompanied by a chain-of-custody form identifying their contents. The original form should accompany the sample shipment, and the copies should be retained by the sampling team. The chain-of-custody form should be placed in a plastic bag to keep it dry and taped to the inside cover of the shipping container (cooler). Detailed information regarding the information contained on the chain-of-custody form is described in Section B.3.4.

Custody Seals

Custody seals are adhesive strips that the sampling team fastens across the opening of the shipping container to demonstrate that the container has not been opened before arriving at the laboratory. Usually, the sampling team places at least two custody seals on the shipping container. The custody seals should be signed and dated by the sampling team when applied to the shipping container. An example of a custody seal is shown in Figure B-13.

Bill of Lading

A bill of lading (or airbill) is the form that accompanies the sample shipping container to provide the shipping information for the carrier. The information contained on the bill of lading includes the destination (recipient's name, company, address), the origin of the shipment (sender's name, company, address), the airbill number (for tracing the shipment), the sender's billing information, and the delivery and special handling service required (such as Saturday delivery or restricted article service for high-concentration samples). An example of a bill of lading is shown in Figure B-13. The sampling team should retain a copy of the bill of lading as part of the chain-of-custody record (see Section B.3.4) for tracing possession and handling of the shipment.

Notification of Shipment to Laboratory

A few days before samples are collected, the sampling team should notify the laboratory of all sample shipments and the type of analysis required in order to confirm the arrangements made during the initial activities (see Section B.1.1). Confirmation will ensure that an authorized individual is available to receive the samples, and allow the laboratory time to arrange for analysis of the samples before holding times are exceeded. The laboratory should be apprised of the number of samples and the type of analysis required for each, especially if there are any changes in the original requirements. As discussed in Section B.4.2, the sampling team should make special arrangements with the laboratory before collecting samples on a Friday, Saturday, or the day before a holiday. Many laboratories are willing to accept Saturday deliveries if notified in advance, although most laboratories do not accept Sunday or holiday deliveries in addition, most carriers will not deliver on Sundays or holidays). Laboratories should also be notified in advance of any shipments requiring special handling, such as dioxin samples.

Figure B-13. Custody Seals and Bill of Lading

UNITED STATES
ENVIRONMENTAL PROTECTION AGENCY
OFFICIAL SAMPLE SEAL

SAMPLE NO.
DATE 1/16/85
SIGNATURE
PRINT NAME AND TITLE (Inspector, Analyst or Technician)
JOE SHIPPER - TECHNICIAN

CUSTODY SEAL
Date
Signature

UNITED STATES ENVIRONMENTAL PROTECTION AGENCY

CUSTODY SEAL
Date 1/16/85
Signature Shipper

Custody Seals

PRESS HARD 5 COPIES
PLEASE PRINT OR TYPE

AIRBILL NUMBER 179404514
DATE 3/19/87

From (Your name): A. SAMPLER
Your Phone Number (Very important): 412 788-1080
Company: NUS CORP.
Department/Floor No.
Street Address: PARK W. TWO CUFF MINE RD.
City: PITTSBURGH
State: PA
ZIP *Zip Code Required For Correct Invoicing: 15275

To (Recipient's Name): B. LAB
Recipient's Phone Number (Very important): (613) 824-5600
Company: TEST IT, INC
Department/Floor No.
Exact Street Address (Use of P.O. Boxes or P.O. + Zip Codes Will Delay Delivery And Result in Extra Charge): 154 GREEN RD.
City: NEW YORK
State: NY
ZIP Street Address Zip Required (No P.O. Box + Zip Code): 07163

AIRBILL NO. 179404514

YOUR BILLING REFERENCE INFORMATION (FIRST 24 CHARACTERS WILL APPEAR ON INVOICE): Y925 AS

PAYMENT: Bill Shipper; Bill Recipient's FedEx Acct. No.; Bill 3rd Party FedEx Acct. No.; Bill Credit Card; Cash

SERVICES CHECK ONLY ONE BOX
PRIORITY 1 OVERNIGHT LETTER
OVERNIGHT DELIVERY USING OUR PACKAGING
STANDARD AIR
SERVICE COMMITMENT

DELIVERY AND SPECIAL HANDLING CHECK SERVICES REQUIRED
HOLD FOR PICK-UP
DELIVER WEEKDAY
DELIVER SATURDAY
RESTRICTED ARTICLES SERVICE
CONSTANT SURVEILLANCE SERVICE (CSS)
DRY ICE
OTHER SPECIAL SERVICE
SATURDAY PICK UP OR SATURDAY DROP OFF

PACKAGES | WEIGHT | YOUR DECLARED VALUE | DELIVERY CHARGE
Total | Total | Total

Received At: Shipper's Door; Regular Stop; On-Call Stop; FedEx Loc.
FedEx Express Corp. Employee No.
Date/Time For FedEx Express Use

HOLD FOR PICK-UP AT THIS FEDERAL EXPRESS STATION
Street Address (See Service Guide or Call 800-238-5355)
City
State
ZIP *Zip Code of Street Address Required

YOUR DECLARED VALUE
DAMAGE OR LOSS
DELAY
CONSEQUENTIAL DAMAGES

FedEx Express Use
Base Charges
Declared Value Charge
Origin Agent Charge
Other
Total Charges

PART #2041738900
FEC-S-0750-25
REVISION DATE 10-86
PRINTED U.S.A. GBF

ORIGIN COPY

Bill of Lading

DOT Requirements

DOT requirements apply to shipment of medium- and high-concentration samples, for both the interior sample containers (paint cans or similar containers -- see Section B.4.1) and the shipping containers (usually coolers -- see Section B.4.1) (U.S. EPA, 1987).

The interior containers should be marked with the proper DOT shipping name and identification number designated in 49 CFR Part 171-177 for specific sample types. If the sample is a liquid of uncertain nature, it should be marked with the name "FLAMMABLE LIQUID, N.O.S." and identification number UN1993. If the sample is a solid of uncertain nature, it should be marked with the name "FLAMMABLE SOLID, N.O.S." and identification number UN1325.

The shipping containers (coolers) should be marked with the DOT shipping name and identification number, the shipper's or consignee's name and address, an arrow or label indicating "this end up" for liquid hazardous materials, and the DOT Hazard Class. These requirements are contained in the following Title 49 CFR citations:

- Parts 100-177 -- Shipper Requirements and Hazardous Material Table;
- Parts 178-199 -- Packaging Specifications; and
- Section 262.20 -- Hazardous Waste Manifest.

The sampling team should refer to these regulations for more detailed information on DOT shipping requirements.

B.4.3 Decontamination

Site control and decontamination are essential for maintaining health and safety as well as for preventing cross-contamination. Two general methods of contamination control are: (1) establishing site work zones (site control), and (2) removing contaminants from people and equipment (decontamination). Decontamination consists of either physically removing contaminants or changing their chemical nature to innocuous substances. The level of decontamination depends on a number of factors, the most important being the type of contaminants involved. The more harmful the contaminant, the more extensive and thorough decontamination must be.

Equipment

A variety of equipment and materials are suitable for decontamination of sampling and personnel protection equipment. Decontamination equipment is generally selected based on availability, ease of equipment decontamination, and disposability. Typical decontamination equipment includes: soft-bristle scrub brushes or long-handle brushes to remove contaminants; water in buckets or garden sprayers for rinsing; large galvanized wash tubs, stock tanks, or plastic basins to hold wash and rinse solutions; large plastic garbage cans or other similar containers lined with plastic bags to store contaminated clothing and equipment; metal or plastic cans or drums to temporarily store contaminated liquids; and other miscellaneous gear such as paper or cloth towels for drying protective clothing and equipment.

Method

Personnel protective equipment, sampling tools, and other equipment are usually decontaminated by scrubbing with detergent water such as Alconox, using a soft-bristle brush, followed by rinsing with copious amounts of water. Alternatively, equipment (especially large equipment) can be cleaned using a pressure hose or pressurized water or steam sprayer. Adhered organics may be removed with clean tissue or rinsed with solvents, which should be collected for disposal. Sampling equipment is further decontaminated analogous to cleaning sampling containers (see Section B.3.1). That is, sampling equipment used for organic samples should be rinsed with spectrographic-grade acetone, then with spectrographic-grade methylene chloride or hexane. The solvent should be retained for safe disposal (IT, 1987). Sampling equipment used for metal-containing samples should be rinsed with dilute nitric or hydrochloric acid, followed by distilled water.

Location

Location of decontamination areas depends on site-specific establishment of zones of decreasing contamination and site access control points. Essentially, the site is divided into three zones to reduce the migration of contaminants from the sampling area: 1) the exclusion zone, which is the area of the site where contamination does or could occur (including the sampling area); 2) the contamination reduction zone, which provides a transition between contaminated and clean zones; and 3) the clean zone. Decontamination areas are located at the boundary between the exclusion and contamination reduction zones.

The size and shape of each zone (and thus the distance from the sampling area) are based on site-specific conditions. Considerable professional judgment is needed to assure that the distances between zone boundaries are large enough to allow room for the necessary operations, provide adequate distance to prevent the spread of contaminants, and eliminate the possibility of injury due to explosion or fire. The criteria used for establishing area dimensions and boundaries include (but are not limited to):

- Physical and topographical site features;
- Weather conditions;
- Air dispersion calculations;
- Contaminant toxicological characteristics; and
- Dimensions of the contaminated area.

Frequency

Sampling and analysis equipment should be free of contamination before reuse, either at separate sample locations or sample points within the same sample location, depending on the sampling objective. Typically, dedicated sampling equipment is used on either a daily or even a project basis, reducing the need for frequent decontamination. Equipment may be disposable (such as gloves) and, therefore, not require decontamination. Some sampling teams even find disposal of the sampling equipment itself (such as trowels) to be cost competitive compared to adequate decontamination.

Cross-Contamination Prevention

The most effective means of preventing cross-contamination during sampling and analysis activities is use of dedicated equipment for each sample location. If dedicated sampling equipment is not available for each sampling location, it should be thoroughly decontaminated between locations. Ideally, equipment blanks should be taken using the decontaminated equipment after each day's work to verify that cross-contamination has not occurred (see Section B.5.3). In any case, equipment rinse blanks should be collected at least once a week. The QAPjP dictates the frequency of equipment blanks. Another method of preventing cross contamination, if dedicated sampling equipment is not used, is to sample regions of lower contamination first, proceeding to progressively more contaminated locations.

Still another consideration in preventing cross-contamination is the exterior contamination of sample containers from handling with contaminated gloves. As mentioned in Section B.3.2, capped containers with samples of high contaminant concentration may require decontamination before packing. This may involve successive washes of the sample containers in detergent solution and deionized water. In addition, high-concentration samples should be packaged as described in Section B.4.1 to lessen the chance of cross-contamination.

Off-site Disposal

Generally, decontamination solutions and contaminated equipment must be manifested for disposal, and taken to a licensed hazardous waste disposer. Policy differs from region to region, however; off-site disposal should be detailed in the sampling team's SAP or HSP and approved by the RPM.

All equipment that cannot be decontaminated and any spent decontamination solutions must be disposed of in accordance with applicable regulations. Clothing, tools, brushes, and other sampling equipment that cannot be decontaminated should be secured in drums or other containers, and either labeled and shipped offsite for disposal or held for disposal of as a part of the planned remedial activity. Likewise, spent decontamination solutions should be transferred to drums that are labeled prior to disposal. Clothing and other equipment that will be decontaminated offsite should be secured in plastic bags before removal from the site.

B.5 QUALITY REVIEW ACTIVITIES

In addition to monitoring the progress of site activities, the oversight assistant and his/her team members are responsible for reviewing the PRP's sampling activities and QA/QC program. The oversight assistant should conduct quality review activities distinct from the PRP's QA/QC activities. That is, the oversight assistant may observe the PRP's QA/QC program, including the collection of samples.

B.5.1 Quality Review Samples

The samples that may be collected by the oversight assistant include blank, split, and replicate samples. The following sections explain the nature of each of these samples are, including their purpose, and discuss the general procedures for collecting them.

Trip Blanks

A trip blank consists of one or more sample bottles filled with pure, uncontaminated material similar to that which is being collected for the field samples. The purpose of the trip blank is to check for the presence of sample bottle or sample contamination over the course of an entire sampling event. The presence of any contamination in the trip blank upon analysis may invalidate the presence of the same contaminants at similar concentrations in the field samples. (All available information should be considered when evaluating the QA samples.) For water sampling, the trip blank must be prepared from distilled deionized water. A minimum of one set of trip blanks should be collected over the time period of each sampling event.

The trip blank should be prepared before commencing field activities. The oversight assistant does not collect the set of trip blanks in the field, but prepares the trip blanks prior to sampling and analysis, or, alternatively, may obtain these samples from the RPM or the laboratory performing the chemical analyses for the U.S. EPA. The trip blank samples should be brought into the field with the empty sample bottles that will be used for the collection of other samples. The trip blanks are subsequently placed in a sample cooler and shipped to the analytical laboratory with the field samples when all sampling is completed. One trip blank (two vials for volatile organics) should be prepared in each of the appropriate sample containers for each analytical parameter that will be analyzed. Trip blanks do not have to be treated as blind samples (samples that are not identified to the laboratory as blanks). But there is no reason that the analytical laboratory must know which samples are or are not trip blanks.

As an example, a trip blank for a ground-water or surface water sample is a sample bottle (or set of sample bottles) of distilled and deionized, contaminant-free water, which is prepared in the laboratory and sent out to the field. The bottle(s) stays in the field during sample collection activities without ever being opened. When sample collection is completed, the bottles are returned to the laboratory for analysis as if they were field samples. If acetone is detected in the trip blank that corresponds to the samples being analyzed for volatile compounds, this would indicate trip blank contamination and possible field sample contamination. If acetone contamination is also found in the field samples at similar concentrations, the acetone results for the field samples would not be used, as the presence of acetone may be due to contamination either from the laboratory or from the sample container itself (U.S. EPA, 1985c).

Trip blanks are not commonly used for soil, sludge, or sediment samples due to the difficulties of obtaining clean material that is nearly identical in composition to the sampled soil, sludge, or sediment. Sometimes a distilled, deionized water sample is used as a trip blank for these media. Other times a background sample (see Section B.5.1), previously shown to be contaminant-free, may be relied on for information on possible field or laboratory contamination (NUS Corporation, 1987; U.S. EPA, 1986a).

Field Blanks

A field blank is similar to a trip blank except that it is prepared in the field during the course of field activities, rather than in the laboratory prior to field activities. The number of field blanks prepared will depend upon the conditions at the site. Typically, a field blank is collected on each day of sampling activity. Field blanks are used to assess whether contamination has been introduced to the samples during the field sample collection and handling activities. Like trip blanks, the presence of any contamination in the field

blank invalidates the presence of the same contaminants at similar concentrations in the associated field samples.

To prepare a field blank, the oversight assistant should carry a container of contaminant-free material similar to that being sampled to one of the sampling locations being used on that specific day, and transfer this material into sample bottles of the same types and from the same lot numbers as those being used to collect field samples. Once prepared, the sample should be placed in one of the sample coolers and treated the same as the field samples. One set of field blanks should be prepared in the appropriate sample containers for each analytical parameter that will be analyzed.

Like trip blanks, field blanks are not commonly used for soil, sludge, or sediment samples due to the difficulties of obtaining clean material that is nearly identical in composition. In some cases, a distilled, deionized water sample is used for a field blank for these media. In other cases, a background sample, previously shown to be contaminant-free, may be relied on for information on possible field or laboratory contamination (NUS Corporation, 1987; U.S. EPA, 1986a).

Equipment Blank

An equipment blank is similar to a field blank except that the material collected in the blank bottles is transferred with decontaminated sampling equipment of the type to be used to collect the field samples. The number of equipment blanks to be collected depends on the types of field equipment and decontamination procedures being used. Typically, one equipment blank is collected for each batch of decontaminated equipment. Equipment blanks are used to determine whether contamination has been introduced to the field samples during their contact with the sampling equipment, which may have been inadequately decontaminated. The presence of any contamination in the equipment blank may invalidate the presence of the same contaminants at similar concentrations in the associated field samples. (All information should be considered when evaluating QA samples.)

The oversight assistant usually collects equipment blanks at the equipment staging area or field trailer/operations center, but these samples may also be collected in the field. An equipment blank for water samples is collected by running distilled, deionized, contaminant-free water over or through pumps, samplers, or other equipment that is used in the field and which may come in direct contact with the field samples. An equipment blank for soil samples may consist of a sample of contaminant-free soil, introduced to the sample bottle with the appropriate sampling equipment. More commonly, distilled, deionized water is used as the sample media for solid as well as liquid samples. Like trip and field blanks, one set of equipment blanks should be prepared in the appropriate sample containers for each analytical parameter to be analyzed. Once collected, the equipment blank(s) should be treated as field samples (U.S. EPA, 1986a).

Background Sample

The oversight assistant may collect background samples to characterize the innate level of suspected contaminants at the site (the level of contaminants not directly associated with the site and its contamination). The oversight assistant should collect (or split with the PRP) background samples in an uncontaminated area upstream, upgradient, or upwind at a sufficient distance from the area being sampled so that contamination from the same source is unlikely. Background samples may be collected prior or during the collection

of other field samples. The oversight assistant should collect the background samples using the same media-specific and general techniques and equipment as used to collect other field samples (see Section B.2). Once collected, the background samples should be treated as field samples.

If the background sample also will serve as a source for blank material, the background material should be as nearly identical in physical characteristics to the material to be sampled as is possible. In this case, the background sample material must also be analyzed prior to use as a source of blank material to determine whether it is contaminant-free.

Split Samples

The sampling team, along with the oversight assistant, may collect split samples to compare the analytical results from the PRP's laboratory with those from the EPA laboratory. Split samples are identical samples that are collected at a single place and time, and, as necessary, divided into two or more portions. Split samples may be collected for one analyte, for a group of analytes, or for all analytes that are being quantified. The number of split samples to be collected is determined by the RPM, and usually is a percentage of all samples collected by the PRPs (see Section B.5.3).

Most samples collected by the oversight assistant/sampling team will be split samples because field samples collected by the oversight assistant/sampling team (with the exception of those discussed in Section B.5.1) are primarily used to check or verify the results of the PRP- analyzed samples. Samples may also be split to compare the analytical results of different laboratory techniques or methods to determine whether the different techniques or methods are generally equivalent.

Typically, split samples are collected by the sampling team, at the request of the oversight assistant. The sample for the oversight assistant is collected into an appropriate container or containers provided by the oversight assistant, and then relinquished to the oversight assistant. Split samples are not always placed in identical sample containers for use by both the oversight assistant and the PRP due to the possibility of differing quantity requirements of the analytical laboratories or different sources of bottles.

It is difficult to accurately split a heterogeneous sample such as a soil sample. Ideally, the sampling team or oversight assistant should distribute the sample as it is collected from the sampler equally between the split sample bottles, filling the sample container for one analyte at a time. If the sample collection device contains only sufficient sample to fill one sample bottle for one analyte, an equal portion of the sample should be placed in each of the split sample bottles. Additional sample should then be collected to fill the bottles.

Replicate Samples

The sampling team along with the oversight assistant may collect replicate samples to compare the analytical precision or variability of the analytical laboratory. Replicate samples are two or more samples collected at the same time, in the same location, with the same equipment, and deposited in identical sample bottles. These samples will then be analyzed by the same laboratory to determine the laboratory's precision. Like split samples, replicate samples may be collected for one analyte, a group of analytes, or for all analytes that are being quantified at the site. The number of replicate samples to be collected is determined by the RPM (see Section B.5.3). For the same

reasons that replicate field samples are collected, a percentage of blank samples may also be collected in replicate.

The oversight assistant should collect the samples with the same media-specific techniques described in Section B.2. Replicate samples should be collected in the appropriate quantities and in appropriate sample containers for each analytical parameter to be evaluated.

The sampling team or oversight assistant should distribute the replicate sample in the same manner as that described above for split samples.

Replicate samples, due to their use as an evaluation of laboratory precision, must be provided to the laboratory as blind samples. That is, the laboratory must not know that they are replicates (NUS Corporation, 1987, U.S. EPA, 1986a, 1987a).

Field Samples

Field samples may be collected by the oversight assistant in addition to those collected by the PRP sampling team. These samples may be collected in locations other than those sampled by the PRP sampling team. One reason for collecting these field samples would be to provide information about suspected contamination at a location other than where the PRPs are sampling. The oversight assistant should collect the samples with the same media-specific techniques described in Section B.2.

B.6 DOCUMENTATION OF SAMPLING AND ANALYSIS ACTIVITIES

The oversight assistant is responsible for the documentation of field activities. Recordkeeping practices should include documenting the day's activities in a field logbook or on the field activity report as well as maintaining a photographic or video record of events. In addition, documentation may be used during litigation to verify the quality of the data collected. Therefore, it is essential that the oversight team keep detailed records of field activities, and thoroughly review all notes to verify that they are accurate before leaving the site.

B.6.1 Oversight Team Field Activity Report/Logbook

The oversight team field activity report and logbook provide daily records of significant events, observations, and measurements during field oversight. The field activity report and field logbook should provide sufficient data and observations to enable the oversight team to reconstruct events that occurred during sampling and analysis and to refresh the memory of oversight assistants if called upon to give testimony during legal proceedings. Because oversight field records (if referred to and admitted as evidence in a legal proceeding) are subject to cross examination, checklist and logbook entries should be factual, detailed, and objective.

Field activities may be recorded in either a field logbook or on the field activity report. The advantage of the field activity report is a consistent method of documentation for all sampling and analysis activities. If the oversight assistant chooses, the field activity report may be used to augment or complement the field logbook.

The field activity report is a tool that has been developed specifically to assist the oversight assistant in the field. This report is in a checklist format, which is structured to remind the oversight assistant of the critical elements of the sampling and analysis activities while also providing a convenient means for documenting the field activities. The field activity report is used in conjunction with the SAP as a tool for reminding the oversight assistant of the specific planned activities, and for keeping a record of any activities that are not conducted according to the plans or that the oversight assistant considers noteworthy.

The field activity report consists of six sections including:

- Cover sheet;
- Initial activities;
- Media-specific sampling activities;
- Common sampling activities;
- Post-sampling activities; and
- Sampling QA/QC.

The field activity report cover sheet provides a format for documenting facts concerning the general types of activities planned for the day, the personnel present onsite, the general conditions at the site (such as weather) and any changes in the plans for that particular day. A separate cover sheet is filled out for each day.

The initial activities section of the report provides a checklist of activities that the oversight assistant can use before arriving at the site to prepare for field oversight. This section also outlines preliminary activities that the oversight assistant should conduct at the site before sample collection. The media-specific sampling activities section is divided into nine different sampling media, so the oversight assistant can use only the specific subsection(s) that he/she is interested in. Each subsection provides the oversight assistant with an outline of the key elements of that medium. The section on common sampling activities describes those activities that occur during sample collection, including: sample containers, labels and tags, preservation and handling methods, and recordkeeping requirements. The section on post-sampling activities includes sample packaging and shipping, and decontamination procedures. The final section included in the checklist outlines the key elements of QA/QC sampling, which includes collecting the oversight quality review samples as well as observing the PRP's QA/QC program. Appendix B has been developed to correspond to the field activity report and discusses the elements of the checklist in a manner that will assist personnel in conducting oversight activities.

The field activity report is structured so that individual sections can stand alone and the oversight assistant can select the sections he is concerned with for a particular trip or day onsite. For example, if the only sampling planned for a trip is ground-water and surface water sampling, the oversight assistant can obtain the relevant information on ground water and surface water from the SAP, remove the ground-water and surface water sampling sections from the field activity report, and bring only those sections to the field. The

sections on common sampling activities and post sampling activities are needed in the field most of the time since they cover a broad range of daily sampling and post-sampling activities.

The oversight assistant may choose to use separate copies of some of the individual media checklists (perhaps one for each sampling source) depending on the nature of the sampling. For example, if surface water sampling is planned for two different bodies of water (i.e., a lake and a stream), the oversight assistant might use a separate checklist for each body of water. Similarly, the oversight assistant may use a separate copy of the sludge/slurry checklist for sampling different lagoons or impoundments, and a separate copy of the soil checklist for sampling gardens and yards at private residences. It probably is not practical, however, to use a separate ground-water checklist for each monitoring well, as the number of wells sampled in 1 day is probably not more than five to eight (which should not be too cumbersome for the space on the checklist). The checklists are designed to be a flexible tool for the oversight assistant allowing for as much or as little use as required to best serve the site-specific situation.

The oversight assistant should transfer important information from the SAP to the field activity report form (using the "comments" space) before leaving for the site. The assistant should then use the form to compare the planned activities or expected conditions with the actual events in the field (using the "Consistent With Plan" space) while at the site. Activity reports should subsequently be summarized into a progress report for RPM review (see Section B.1.3). In addition, copies of the logbook or the field activity report should be made available for RPM review.

B.6.2 Oversight Team Photographic/Video Log

The oversight team should document some of the more critical field activities with a photographic or video camera. If a Polaroid camera is used for this purpose, the photographed activity, location, date, and time should be recorded directly on the photograph. If film must be sent out for development (or if videotape is used), the pertinent information should be recorded in the field logbook by exposure number, preferably in the order the pictures were taken. Because a camera exposure number may not exactly correspond with the film exposure, maintaining a separate sequential photograph log as part of the field logbook may help prevent confusion when matching the photograph to the appropriate activity. Developed photographs should be maintained in an album to prevent damage and preserve photographic quality. In addition, photographs should be arranged in sequential order, or grouped by sampling or analysis activity.

FIELD ACTIVITY REPORT

COVER SHEET

Site Name: Date:

Location:

Oversight Personnel:

PRP Field
Personnel:

Weather Conditions:

Planned Activities:

Approved Changes in Work Plan:

Important Communications:

Hours Oversight Official and Staff On-site:

Oversight Official's Initials:

Date: _____
Site Name: _____
Initials: _____
Page # _____ of _____

	Consistent with Plan (Y/N)	Comments

B.1 INITIAL ACTIVITIES

B.1.1 PREPARATION

1. Review Field Sampling Plan for:

a. Sample media	_____	_____
b. Location and number of samples	_____	_____
c. Sampling methods and equipment	_____	_____
d. Field personnel responsibilities/ qualifications	_____	_____

2. Health and Safety Requirements

a. Review health and safety plans (PRPs and oversight officials)	_____	_____
b. Review health and safety standard operating procedures	_____	_____
c. Review exposure limits/ action levels	_____	_____
d. Protective gear	_____	_____
e. Other considerations	_____	_____

NOTES:

Date: _____
Site Name: _____
Initials: _____
Page # _____ of _____

	Consistent with Plan (Y/N)	Comments
3. Oversight Equipment		
(Bring the following)		
a. Oversight checklists	_____	_____
b. Field logbook	_____	_____
c. Camera	_____	_____
d. Sampling equipment (for splits/duplicates)	_____	_____
e. Protective gear	_____	_____
f. Other	_____	_____
4. Coordination with:		
a. PRPs	_____	_____
b. Sampling contractors	_____	_____
c. State or local environmental authorities (if appropriate)	_____	_____
d. Laboratory (if appropriate)	_____	_____
e. EPA (if appropriate)	_____	_____

NOTES:

Date: _____
Site Name: _____
Initials: _____
Page # _____ of _____

	Consistent with Plan (Y/N)	Comments
B.1.2 PRELIMINARY ON-SITE ACTIVITIES		
1. Review Personnel Qualifications		
a. Field personnel qualifications	_____	_____
2. Record Location and Number of Samples		
a. Sampling locations	_____	_____
b. Number of samples	_____	_____
c. Other considerations	_____	_____
3. Record Sample Equipment		
a. Sample Equipment	_____	_____
b. Appropriate equipment	_____	_____
c. Other considerations	_____	_____
4. Record Decontamination Area/ Clean Area		
a. Decontamination area		
Physical location	_____	_____
Proximity to sampling locations	_____	_____

NOTES:

Date: _____
Site Name: _____
Initials: _____
Page # _____ of _____

	Consistent with Plan (Y/N)	Comments
Number of decontamination areas	_____	_____
b. Clean area		
Physical location	_____	_____
Proximity to sampling locations	_____	_____
Number of clean areas	_____	_____
5. Tour of Site		
6. Equipment Calibration		
Field analytical equipment calibrated (see Appendix A3 Field Analytical Techniques	_____	_____
7. Other	_____	_____

NOTES:

Date: _____
Site Name: _____
Initials: _____
Page # _____ of _____

	Consistent with Plan (Y/N)	Comments
B.2 SAMPLING		
B.2.1 SURFACE WATER		
1. General Site Conditions	_____	_____
2. General Surface Water Conditions	_____	_____
3. Sampling Locations		
a. Water (depths)	_____	_____
b. Sediment	_____	_____
c. Biota	_____	_____
4. Sample Equipment	_____	_____
5. Sample Type	_____	_____
a. Grab	_____	_____
b. Composite or continuous	_____	_____
6. Sample Technique		

NOTES:

Date: _____
Site Name: _____
Initials: _____
Page # _____ of _____

	Consistent with Plan (Y/N)	Comments
7. Field Analytical Techniques		
a. Equipment	_____	_____
b. Calibration of equipment	_____	_____
Standardized calibration procedures	_____	_____
Calibrated before use	_____	_____
Label/log certifying calibration	_____	_____
c. Operation	_____	_____
d. Decontamination	_____	_____
e. Recording/reporting	_____	_____
Instrument hard-copy output	_____	_____
Logbook	_____	_____
Duplicate verification	_____	_____
f. Action level response	_____	_____

NOTES:

Date: _____
Site Name: _____
Initials: _____
Page # _____ of _____

	Consistent with Plan (Y/N)	Comments
8. Containers		
a. Container type (clear glass, amber glass, plastic)	_____	_____
b. Container size (volume)	_____	_____
c. Container condition (new, decontaminated before use)	_____	_____
9. Labels/Tags		
a. Labeling procedure	_____	_____
b. Labeling information	_____	_____
10. Decontamination		
a. Equipment	_____	_____
b. Method	_____	_____
c. Location	_____	_____
Proximity to surface water	_____	_____
Proximity to population	_____	_____

NOTES:

Date: _____
Site Name: _____
Initials: _____
Page # _____ of _____

	Consistent with Plan (Y/N)	Comments
d. Frequency	_____	_____
Sampling team	_____	_____
- Sampling equipment	_____	_____
- Protective clothing	_____	_____
Oversight team	_____	_____
- Sampling equipment	_____	_____
- Protective clothing	_____	_____
e. Cross contamination prevention	_____	_____
f. On-site waste storage	_____	_____
Sampling team	_____	_____
Oversight team	_____	_____
g. Off-site disposal	_____	_____
RCRA/State requirements	_____	_____
DOT requirements	_____	_____

NOTES:

Date: _____
Site Name: _____
Initials: _____
Page # _____ of _____

	Consistent with Plan (Y/N)	Comments
11. Preservation/Handing		
a. Sample filtering	_____	_____
b. Sample preservation	_____	_____
c. Sample storage	_____	_____
Refrigeration/ice	_____	_____
Protection from light	_____	_____
12. Recordkeeping		
a. Chain-of-Custody information (see Post-sampling Activities)	_____	_____
b. Sampling team field record	_____	_____
Method	_____	_____
Photographs	_____	_____
c. Oversight team checklist/logbook		_____
Checklists		_____
Logbook		_____
Possession		_____

NOTES:

Date: _____
Site Name: _____
Initials: _____
Page # _____ of _____

	Consistent with Plan (Y/N)	Comments
d. Oversight team photographs		
Subject/activity		_____
Labeling		_____
Possession (photographs and negatives)		_____
13. Other considerations	_____	_____

NOTES:

Date: _____
Site Name: _____
Initials: _____
Page # _____ of _____

	Consistent with Plan (Y/N)	Comments
B.2 SAMPLING		
B.2.2 GROUND WATER		
1. General Site Conditions		
2. General Ground-water Conditions		
a. Depth to water table		
b. Direction/velocity of flow		
3. Well Location/Condition	_____	
4. Sampling Equipment	_____	
a. Ground water	_____	
b. Vapor	_____	
5. Sample Type		
a. Grab	_____	
b. Composite or continuous	_____	

NOTES:

Date: _____
Site Name: _____
Initials: _____
Page # _____ of _____

	Consistent with Plan (Y/N)	Comments
6. Sampling Technique	_____	_____
a. Purge volume/well volumes	_____	_____
b. Purge disposal	_____	_____
c. Collection technique	_____	_____
7. Field Analytical Techniques		
a. Equipment	_____	_____
b. Calibration of equipment	_____	_____
Standardized calibration procedures	_____	_____
Calibrated before use	_____	_____
Label/log certifying calibration	_____	_____
c. Operation	_____	_____
Duplicate verification	_____	_____
d. Decontamination	_____	_____
e. Recording/reporting	_____	_____
Instrument hard-copy output	_____	_____
Logbook	_____	_____
f. Action level response	_____	_____

NOTES:

Date: _____
Site Name: _____
Initials: _____
Page # _____ of _____

	Consistent with Plan (Y/N)	Comments
8. Containers		
a. Container type (clear glass, amber glass, plastic)	_____	_____
b. Container size (volume)	_____	_____
c. Container condition (new, decontaminated before use)	_____	_____
9. Label/Tags		
a. Labeling procedure	_____	_____
b. Labeling information	_____	_____
10. Decontamination		
a. Equipment	_____	_____
b. Method	_____	_____
c. Location	_____	_____
Proximity to surface water	_____	_____
Proximity to population	_____	_____

NOTES:

Date: _____
Site Name: _____
Initials: _____
Page # _____ of _____

	Consistent with Plan (Y/N)	Comments
d. Frequency	_____	_____
Sampling team	_____	_____
- Sampling equipment	_____	_____
- Protective clothing	_____	_____
Oversight team	_____	_____
- Sampling equipment	_____	_____
- Protective clothing	_____	_____
e. Cross contamination prevention	_____	_____
f. On-site waste storage	_____	_____
Sampling team	_____	_____
Oversight team	_____	_____
g. Off-site disposal	_____	_____
RCRA/State requirement	_____	_____
DOT requirements	_____	_____

NOTES:

Date: _____
Site Name: _____
Initials: _____
Page # _____ of _____

	Consistent with Plan (Y/N)	Comments
11. Preservation/Handling		
a. Sample filtering	_____	_____
b. Sample preservation	_____	_____
c. Sample storage	_____	_____
Refrigeration/ice	_____	_____
Protection from light	_____	_____
12. Recordkeeping		
a. Chain-of-custody information (see Post-sampling Activities)	_____	_____
b. Sampling team field record	_____	_____
Method	_____	_____
Photographs	_____	_____
c. Oversight team field record	_____	_____
Checklists	_____	_____
Logbook	_____	_____
Possession	_____	_____

NOTES:

Date: _____
Site Name: _____
Initials: _____
Page # _____ of _____

	Consistent with Plan (Y/N)	Comments
d. Oversight team photographs	_____	_____
Subject/activity	_____	_____
Labeling	_____	_____
Possession (photographs and negatives)	_____	_____
13. Other Considerations	_____	_____

NOTES:

Date: _____
Site Name: _____
Initials: _____
Page # _____ of _____

	Consistent with Plan (Y/N)	Comments
B.2 SAMPLING		
B.2.3 SOIL WATER		
1. General Site Conditions		_____
2. General Soil Conditions & Types		_____
3. Sampling Locations	_____	_____
4. Sampling Equipment	_____	_____
5. Sample Type		
a. Grab	_____	_____
b. Composite	_____	_____
6. Sampling Technique	_____	_____
7. Field Analytical Techniques		
a. Equipment	_____	_____
b. Calibration of equipment	_____	_____
Standard calibration procedures	_____	_____

NOTES:

Date: _____
Site Name: _____
Initials: _____
Page # _____ of _____

	Consistent with Plan (Y/N)	Comments
Calibrated before use	_____	_____
Label/log certifying calibration	_____	_____
c. Operation	_____	_____
d. Decontamination	_____	_____
e. Recording/reporting	_____	_____
Instrument hard-copy output	_____	_____
Logbook	_____	_____
Duplicate verification	_____	_____
f. Action level response	_____	_____
8. Containers		
a. Container type (clear glass, amber glass, plastic)	_____	_____
b. Container size (volume)	_____	_____
c. Container condition (new, decontaminated before use)	_____	_____
9. Labels/Tags		
a. Labeling procedure	_____	_____
b. Labeling information	_____	_____

NOTES:

Date: _____
Site Name: _____
Initials: _____
Page # _____ of _____

	Consistent with Plan (Y/N)	Comments
10. Decontamination		
a. Equipment	_____	_____
b. Method	_____	_____
c. Location	_____	_____
Proximity to surface water	_____	_____
Proximity to population	_____	_____
d. Frequency	_____	_____
Sampling team	_____	_____
- Sampling equipment	_____	_____
- Protective clothing	_____	_____
Oversight team	_____	_____
- Sampling equipment	_____	_____
- Protective clothing	_____	_____
e. Cross contamination prevention	_____	_____
f. On-site waste storage	_____	_____
Sampling team	_____	_____
Oversight team	_____	_____

NOTES:

Date: _____
Site Name: _____
Initials: _____
Page # _____ of _____

	Consistent with Plan (Y/N)	Comments
g. Off-site disposal	_____	_____
RCRA/State requirements	_____	_____
DOT requirements	_____	_____
11. Preservation/Handling		
a. Sample filtering	_____	_____
b. Sample preservation	_____	_____
c. Sample storage	_____	_____
Refrigeration/ice	_____	_____
Protection from light	_____	_____
12. Recordkeeping		
a. Chain-of-custody information (see Post-sampling Activities)	_____	_____
b. Sampling team field record	_____	_____
Method	_____	_____
Photographs	_____	_____
c. Oversight team field record	_____	_____
Checklists	_____	_____
Logbook	_____	_____

NOTES:

Date: _____
Site Name: _____
Initials: _____
Page # _____ of _____

	Consistent with Plan (Y/N)	Comments
Possession	_____	_____
d. Oversight team photographs	_____	_____
Subject/activity	_____	_____
Labeling	_____	_____
Possession (photographs and negatives)	_____	_____
Maintenance of negatives	_____	_____
13. Other Considerations	_____	_____

NOTES:

Date: _____
Site Name: _____
Initials: _____
Page # _____ of _____

	Consistent with Plan (Y/N)	Comments
B.2 SAMPLING		
B.2.4 SURFACE SOIL		
1. General Site Conditions		_____
2. General Vegetation Conditions		_____
3. General Soil Conditions & Types		_____
4. Sampling Locations	_____	_____
5. Sampling Equipment	_____	_____
6. Sample Type		
a. Grab	_____	_____
b. Composite	_____	_____
7. Sampling Technique	_____	_____

NOTES:

Date: _____
Site Name: _____
Initials: _____
Page # _____ of _____

	Consistent with Plan (Y/N)	Comments
8. Field Analytical Techniques		
a. Equipment	_____	_____
b. Calibration of equipment	_____	_____
Standardized calibration procedures	_____	_____
Calibrated before use	_____	_____
Label/log certifying calibration	_____	_____
c. Operation	_____	_____
d. Decontamination	_____	_____
e. Recording/reporting	_____	_____
Instrument hard-copy output	_____	_____
Logbook	_____	_____
Duplicate verification	_____	_____
f. Action level response	_____	_____

NOTES:

Date: _____
Site Name: _____
Initials: _____
Page # _____ of _____

	Consistent with Plan (Y/N)	Comments
9. Containers		
a. Container type (clear glass, amber glass, plastic)		
b. Container size (volume)		
c. Container condition (new, decontaminated before use)		
10. Labels/Tags		
a. Labeling procedure		
b. Labeling information		
11. Decontamination		
a. Equipment		
b. Method		
c. Location		
Proximity to surface water		
Proximity to population		
d. Frequency		
Sampling team		
- Sampling equipment		

NOTES:

Date: _____
Site Name: _____
Initials: _____
Page # _____ of _____

	Consistent with Plan (Y/N)	Comments
- Protective clothing	_____	_____
Oversight team	_____	_____
- Sampling equipment	_____	_____
- Protective clothing	_____	_____
e. Cross contamination prevention	_____	_____
f. On-site waste storage	_____	_____
Sampling team	_____	_____
Oversight team	_____	_____
g. Off-site disposal	_____	_____
RCRA/State requirements	_____	_____
DOT requirements	_____	_____
12. Preservation/Handling		
a. Sample filtering	_____	_____
b. Sample preservation	_____	_____
c. Sample storage	_____	_____
Refrigeration/ice	_____	_____
Protection from light	_____	_____

NOTES:

Date: _____
Site Name: _____
Initials: _____
Page # _____ of _____

	Consistent with Plan (Y/N)	Comments
13. Recordkeeping		
a. Chain-of-custody information (see Post-sampling Activities)	_____	_____
b. Sampling team field record	_____	_____
Method	_____	_____
Photographs	_____	_____
c. Oversight team field record	_____	_____
Checklists	_____	_____
Logbook	_____	_____
Possession	_____	_____
d. Oversight team photographs	_____	_____
Subject/activity	_____	_____
Labeling	_____	_____
Possession (photographs and negatives)	_____	_____
Maintenance of negatives	_____	_____
14. Other Considerations	_____	_____

NOTES:

Date: _____
Site Name: _____
Initials: _____
Page # _____ of _____

	Consistent with Plan (Y/N)	Comments
B.2 SAMPLING		
B.2.5 SUBSURFACE SOIL		
1. General Site Conditions		
2. General Vegetation Conditions		
3. General Soil Conditions & Types		
4. Sampling Locations		
5. Sampling Equipment		
6. Sample Type		
a. Grab		
b. Composite		
7. Sampling Technique		

NOTES:

Date: _____
Site Name: _____
Initials: _____
Page # _____ of _____

	Consistent with Plan (Y/N)	Comments
8. Field Analytical Techniques		
a. Equipment	_____	_____
b. Calibration of equipment	_____	_____
Standardized calibration procedures	_____	_____
Calibrated before use	_____	_____
Label/log certifying calibration	_____	_____
c. Operation	_____	_____
d. Decontamination	_____	_____
e. Recording/reporting	_____	_____
Instrument hard-copy output	_____	_____
Logbook	_____	_____
Duplicate verification	_____	_____
f. Action level response	_____	_____
9. Containers		
a. Container type (clear glass, amber glass, plastic)	_____	_____
b. Container size (volume)	_____	_____

NOTES:

Date: _____
Site Name: _____
Initials: _____
Page # _____ of _____

	Consistent with Plan (Y/N)	Comments
c. Container condition (new, decontaminated before use)	_____	_____
10. Labels/Tags		
a. Labeling procedure	_____	_____
b. Labeling information	_____	_____
11. Decontamination		
a. Equipment	_____	_____
b. Method	_____	_____
c. Location	_____	_____
Proximity to surface water	_____	_____
Proximity to population	_____	_____
d. Frequency	_____	_____
Sampling team	_____	_____
- Sampling equipment	_____	_____
- Protective clothing	_____	_____

NOTES:

Date: _____
Site Name: _____
Initials: _____
Page # _____ of _____

	Consistent with Plan (Y/N)	Comments
e. Cross contamination prevention	_____	_____
f. On-site waste storage	_____	_____
Sampling team	_____	_____
Oversight team	_____	_____
g. Off-site disposal	_____	_____
RCRA/State requirements	_____	_____
DOT requirements	_____	_____
12. Preservation/Handling		
a. Sample filtering	_____	_____
b. Sample preservation	_____	_____
c. Sample storage	_____	_____
Refrigeration/ice	_____	_____
Protection from light	_____	_____

NOTES:

Date: _____
Site Name: _____
Initials: _____
Page # _____ of _____

	Consistent with Plan (Y/N)	Comments
13. Recordkeeping		
a. Chain-of-custody information (see Post-sampling Activities)	_____	_____
b. Sampling team field record	_____	_____
Method	_____	_____
Photographs	_____	_____
c. Oversight team field record	_____	_____
Checklists	_____	_____
Logbook	_____	_____
Possession	_____	_____
d. Oversight team photographs	_____	_____
Subject/activity	_____	_____
Labeling	_____	_____
Possession (photographs and negatives)	_____	_____
Maintenance of negatives	_____	_____
14. Other Considerations	_____	_____

NOTES:

Date: _____
Site Name: _____
Initials: _____
Page # _____ of _____

	Consistent with Plan (Y/N)	Comments

B.2 SAMPLING

B.2.6 SOIL VAPOR

1. General Site Conditions		_____
2. General Soil Conditions & Types		_____
3. Sampling Locations	_____	_____
4. Sampling Equipment	_____	_____
5. Sample Type		
a. Grab	_____	_____
6. Sampling Technique	_____	_____
7. Field Analytical Techniques		
a. Equipment	_____	_____
b. Calibration of equipment	_____	_____
Standardized calibration procedures	_____	_____
Calibrated before use	_____	_____

NOTES:

Date: _____
Site Name: _____
Initials: _____
Page # _____ of _____

	Consistent with Plan (Y/N)	Comments
Label/log certifying calibration	_____	_____
c. Operation	_____	_____
d. Decontamination	_____	_____
e. Recording/reporting	_____	_____
Instrument hard-copy output	_____	_____
Logbook	_____	_____
Duplicate verification	_____	_____
f. Action level response	_____	_____
8. Containers		
a. Container type (clear glass, amber glass, plastic)	_____	_____
b. Container size (volume)	_____	_____
c. Container condition (new, decontaminated before use)	_____	_____
9. Labels/Tags		
a. Labeling procedure	_____	_____
b. Labeling information	_____	_____

NOTES:

Date: _____
Site Name: _____
Initials: _____
Page # _____ of _____

	Consistent with Plan (Y/N)	Comments
10. Decontamination		
a. Equipment	_____	_____
b. Method	_____	_____
c. Location	_____	_____
Proximity to surface water	_____	_____
Proximity to population	_____	_____
d. Frequency	_____	_____
Sampling team	_____	_____
- Sampling equipment	_____	_____
- Protective clothing	_____	_____
e. Cross contamination prevention	_____	_____
f. On-site waste storage	_____	_____
Sampling team	_____	_____
Oversight team	_____	_____

NOTES:

Date: _____
Site Name: _____
Initials: _____
Page # _____ of _____

	Consistent with Plan (Y/N)	Comments
g. Off-site disposal	_____	_____
RCRA/State requirements	_____	_____
DOT requirements	_____	_____
11. Preservation/Handling		
a. Sample filtering	_____	_____
Refrigeration/ice	_____	_____
Protection from light	_____	_____
12. Recordkeeping		
a. Chain-of-custody information (see Post-sampling Activities)	_____	_____
b. Sampling team field record	_____	_____
Method	_____	_____
Photographs	_____	_____
c. Oversight team field record	_____	_____
Checklists	_____	_____
Logbook	_____	_____
Possession	_____	_____

NOTES:

Date: _____
Site Name: _____
Initials: _____
Page # _____ of _____

	Consistent with Plan (Y/N)	Comments
d. Oversight team photographs	_____	_____
Subject/activity	_____	_____
Labeling	_____	_____
Possession (photographs and negatives)	_____	_____
13. Other Considerations	_____	_____

NOTES:

Date: _____
Site Name: _____
Initials: _____
Page # _____ of _____

	Consistent with Plan (Y/N)	Comments
B.2 SAMPLING		
B.2.7 SLUDGE/SLURRY		
1. General Site Conditions		_____
2. General Soil Conditions & Types		_____
3. Sampling Locations	_____	_____
4. Sampling Equipment	_____	_____
5. Sample Type		
a. Grab	_____	_____
6. Sampling Technique	_____	_____
7. Field Analytical Techniques		
a. Equipment	_____	_____
b. Calibration of equipment	_____	_____
Standardized calibration procedures	_____	_____

NOTES:

Date: _____
Site Name: _____
Initials: _____
Page # _____ of _____

	Consistent with Plan (Y/N)	Comments
Calibrated before use	_____	_____
Label/log certifying calibration	_____	_____
c. Operation	_____	_____
d. Decontamination	_____	_____
e. Recording/reporting	_____	_____
Instrument hard-copy output	_____	_____
Logbook	_____	_____
Duplicate verification	_____	_____
f. Action level response	_____	_____
8. Containers		
a. Container type (clear glass, amber glass, plastic)	_____	_____
b. Container size (volume)	_____	_____
c. Container condition (new, decontaminated before use)	_____	_____

NOTES:

Date: _____
Site Name: _____
Initials: _____
Page # _____ of _____

	Consistent with Plan (Y/N)	Comments
9. Labels/Tags		
a. Labeling procedure	_____	_____
b. Labeling information	_____	_____
10. Decontamination		
a. Equipment	_____	_____
b. Method	_____	_____
c. Location	_____	_____
Proximity to surface water	_____	_____
Proximity to population	_____	_____
d. Frequency	_____	_____
Sampling team	_____	_____
- Sampling equipment	_____	_____
- Protective clothing	_____	_____
e. Cross contamination prevention	_____	_____

NOTES:

Date: _____
Site Name: _____
Initials: _____
Page # _____ of _____

	Consistent with Plan (Y/N)	Comments
f. On-site waste storage	_____	_____
Sampling team	_____	_____
Oversight team	_____	_____
g. Off-site disposal	_____	_____
RCRA/State requirements	_____	_____
DOT requirements	_____	_____
11. Preservation/Handling		
a. Sample filtering	_____	_____
b. Sample preservation	_____	_____
c. Sample storage	_____	_____
Refrigeration/ice	_____	_____
Protection from light	_____	_____
12. Recordkeeping		
a. Chain-of-custody information (see Post-sampling Activities)	_____	_____
b. Sampling team field record	_____	_____
Method	_____	_____

NOTES:

Date: _____
Site Name: _____
Initials: _____
Page # _____ of _____

	Consistent with Plan (Y/N)	Comments
Photographs	_____	_____
c. Oversight team field record	_____	_____
Checklists	_____	_____
Bound logbook	_____	_____
Possession	_____	_____
d. Oversight team photographs	_____	_____
Subject/activity	_____	_____
Labeling	_____	_____
Possession	_____	_____
(photographs and negatives)	_____	_____
13. Other Considerations	_____	_____

NOTES:

Date: _____
Site Name: _____
Initials: _____
Page # _____ of _____

	Consistent with Plan (Y/N)	Comments
B.2 SAMPLING		
B.2.8 CONTAINERIZED WASTE		
1. General Site Conditions		_____
2. General Description of Containers		_____
3. Sampling Equipment	_____	_____
4. Sample Type		
a. Grab	_____	_____
b. Composite	_____	_____
5. Sampling Technique	_____	_____
6. Field Analytical Techniques		
a. Equipment	_____	_____
b. Calibration of equipment	_____	_____
Standardized calibration procedures	_____	_____
Calibrated before use	_____	_____

NOTES:

Date: _____
Site Name: _____
Initials: _____
Page # _____ of _____

	Consistent with Plan (Y/N)	Comments
Label/log certifying calibration	_____	_____
c. Operation	_____	_____
d. Decontamination	_____	_____
e. Recording/reporting	_____	_____
Instrument hard-copy output	_____	_____
Logbook	_____	_____
Duplicate verification	_____	_____
f. Action level response	_____	_____
7. Containers		
a. Container type (clear glass, amber glass, plastic)	_____	_____
b. Container size (volume)	_____	_____
c. Container condition (new, decontaminated before use)	_____	_____
8. Labels/Tags		
a. Labeling procedure	_____	_____
b. Labeling information	_____	_____

NOTES:

Date: _____
Site Name: _____
Initials: _____
Page # _____ of _____

	Consistent with Plan (Y/N)	Comments
9. Decontamination		
a. Equipment	_____	_____
b. Method	_____	_____
c. Location	_____	_____
Proximity to surface water	_____	_____
Proximity to population	_____	_____
d. Frequency	_____	_____
Sampling team	_____	_____
- Sampling equipment	_____	_____
- Protective clothing	_____	_____
e. Cross contamination prevention	_____	_____
f. On-site waste storage	_____	_____
Sampling team	_____	_____
Oversight team	_____	_____

NOTES:

Date: _____
Site Name: _____
Initials: _____
Page # _____ of _____

	Consistent with Plan (Y/N)	Comments
g. Off-site disposal	_____	_____
RCRA/State requirements	_____	_____
DOT requirements	_____	_____
10. Preservation/Handling		
a. Sample filtering	_____	_____
b. Sample preservation	_____	_____
c. Sample storage	_____	_____
Refrigeration/ice	_____	_____
Protection from light	_____	_____
11. Recordkeeping		
a. Chain-of-custody information (see Post-sampling Activities)	_____	_____
b. Sampling team field record	_____	_____
Method	_____	_____
Photographs	_____	_____
c. Oversight team field record	_____	_____
Checklists	_____	_____
Logbook	_____	_____

NOTES:

Date: _____
Site Name: _____
Initials: _____
Page # _____ of _____

	Consistent with Plan (Y/N)	Comments
Possession	_____	_____
d. Oversight team photographs	_____	_____
Subject/activity	_____	_____
Labeling	_____	_____
Possession (photographs and negatives)	_____	_____
12. Other Considerations	_____	_____

NOTES:

Date: _____
Site Name: _____
Initials: _____
Page # _____ of _____

	Consistent with Plan (Y/N)	Comments
B.2 SAMPLING		
B.2.9 AMBIENT AIR		
1. General Site Conditions		_____
2. General Background Conditions	_____	_____
3. Sampling Locations	_____	_____
4. Sampling Equipment	_____	_____
5. Sample Type		
a. Grab	_____	_____
b. Composite or continuous	_____	_____
6. Sampling Technique	_____	_____
7. Field Analytical Techniques		
a. Equipment	_____	_____
b. Calibration of equipment	_____	_____
Standardized calibration procedures	_____	_____

NOTES:

Date: _____
Site Name: _____
Initials: _____
Page # _____ of _____

	Consistent with Plan (Y/N)	Comments
Calibrated before use	_____	_____
Label/log certifying calibration	_____	_____
c. Operation	_____	_____
d. Decontamination	_____	_____
e. Recording/reporting	_____	_____
Instrument hard-copy output	_____	_____
Logbook	_____	_____
Duplicate verification	_____	_____
f. Action level response	_____	_____
8. Containers		
a. Container type (clear glass, amber glass, plastic)	_____	_____
b. Container size (volume)	_____	_____
c. Container condition (new, decontaminated before use)	_____	_____

NOTES:

Date: _____
Site Name: _____
Initials: _____
Page # _____ of _____

	Consistent with Plan (Y/N)	Comments
9. Labels/Tags		
a. Labeling procedure	_____	_____
b. Labeling information	_____	_____
10. Decontamination		
a. Equipment	_____	_____
b. Method	_____	_____
c. Location	_____	_____
Proximity to surface water	_____	_____
Proximity to population	_____	_____
d. Frequency	_____	_____
Sampling team	_____	_____
- Sampling equipment	_____	_____
- Protective clothing	_____	_____
Oversight team	_____	_____
- Sampling equipment	_____	_____
- Protective clothing	_____	_____
e. Cross contamination prevention	_____	_____

NOTES:

Date: _____
Site Name: _____
Initials: _____
Page # _____ of _____

	Consistent with Plan (Y/N)	Comments
f. On-site waste storage	_____	_____
Sampling team	_____	_____
Oversight team	_____	_____
g. Off-site disposal	_____	_____
RCRA/State requirements	_____	_____
DOT requirements	_____	_____
11. Preservation/Handling		
a. Sample filtering	_____	_____
b. Sample preservation	_____	_____
c. Sample storage	_____	_____
Refrigeration/ice	_____	_____
Protection from light	_____	_____
12. Recordkeeping		
a. Chain-of-custody information (see Post-sampling Activities)	_____	_____
b. Sampling team field record	_____	_____
Method	_____	_____
Photographs	_____	_____

NOTES:

Date: _____
Site Name: _____
Initials: _____
Page # _____ of _____

	Consistent with Plan (Y/N)	Comments
c. Oversight team field record	_____	_____
Checklists	_____	_____
Logbook	_____	_____
Possession	_____	_____
d. Oversight team photographs	_____	_____
Subject/activity	_____	_____
Labeling	_____	_____
Possession (photographs and negatives)	_____	_____
13. Other Considerations	_____	_____

NOTES:

Date: _____
Site Name: _____
Initials: _____
Page # _____ of _____

	Consistent with Plan (Y/N)	Comments

B.3 POST-SAMPLING ACTIVITIES

B.3.1 PACKAGING

1. Methods	_____	_____
2. Materials	_____	_____
3. Other Prescribed Specifications	_____	_____

B.3.2 SHIPPING/CHAIN-OF-CUSTODY

a. Timely shipping	_____	_____
b. Number of copies of chain-of-custody form to laboratory	_____	_____
c. Custody seals	_____	_____
Sample containers	_____	_____
Shipping container	_____	_____
d. Bill of lading	_____	_____
e. Notification of shipment to laboratory	_____	_____
f. DOT requirements	_____	_____

NOTES:

Date: _____
Site Name: _____
Initials: _____
Page # _____ of _____

	Consistent with Plan (Y/N)	Comments
B.4 QA/QC		
B.4.1 SAMPLING QUALITY REVIEW		
1. Calibration (see Appendix A3, Field Analytical Technique)	_____	_____
2. Trip Blanks		
a. Location	_____	_____
b. Sampling procedure (see appropriate sampling section)	_____	_____
3. Field Blanks		
a. Location	_____	_____
b. Sampling procedure (see appropriate sampling section)	_____	_____
4. Background Sample		
a. Location	_____	_____
b. Sampling procedure (see appropriate sampling section)	_____	_____

NOTES:

Date: _____
Site Name: _____
Initials: _____
Page # _____ of _____

	Consistent with Plan (Y/N)	Comments
5. Split Samples		
a. Location	_____	_____
b. Sampling procedure (see appropriate sampling section)	_____	_____
6. Duplicate Samples		
a. Location	_____	_____
b. Sampling procedure (see appropriate sampling section)	_____	_____

NOTES:

APPENDIX B

REFERENCES

Camp, Dresser, and McKee, undated, Basic Health and Safety Training Course Manual, CDM150.4

Federal Register, 1984, 40CFR Part 136 Vol 49, No. 209, October 26.

IT Corporation, 1987, Manual of Sampling and Analytical Methods for Petroleum Hydrocarbons in Groundwater and Soil.

NUS Corporation, 1987, Hazardous Materials Handling Training Manual, NUS Corporation, Waste Management Services Group.

Planning Research Corporation, 1986, Protocol for Groundwater Inspecting at Hazardous Waste Treatment Storage and Disposal Facilities. Planning Research Corporation, Chicago, IL.

U.S. Environmental Protection Agency, (May 1978) Revised November 1984: NEIC Policies and Procedures. EPA-33-/9-78-001R.

U.S. Environmental Protection Agency, 1980a, Samplers and Sampling Procedures for Hazardous Waste Streams. EPA-600/2-80-018.

U.S. Environmental Protection Agency, 1980b, "Total Organic Halide, Interim Method 450.1." ORDEMSL, Cincinnati, OH

U.S. Environmental Protection Agency, 1981, NEIC Manual for Groundwater/Subsurface Investigations at Hazardous Waste Sites. EPA-600/2-85/104.

U.S. Environmental Protection Agency, 1986a, RCRA Ground-Water Monitoring Technical Enforcement Guidance Document. OSWER-9950.1

U.S. Environmental Protection Agency, 1986b, User's Guide to the Contract Laboratory Program. Office of Emergency and Remedial Response.

U.S. Environmental Protection Agency, 1986c, Engineering Support Branch, Standard Operating Procedures and Quality Assurance Manual. Region IV, Environmental Services Division.

U.S. Environmental Protection Agency, 1986d, REM II Health and Safety Assurance Manual. 999-HSI-RT-CGSY-1.

U.S. Environmental Protection Agency, 1987a, A Compendium of Superfund Field Operations Methods, two volumes. EPA-540/P-87/001, OWSER Directive 9355.0-1

U.S. Environmental Protection Agency, 1987b, DRAFT Site Sampling and Field Measurements Handbook for Underground Storage Tank Releases.

U.S. Environmental Protection Agency, 1991, Soil Sampling and Analysis for Volatile Organic Compounds, T. Lewis, et al.

APPENDIX C

OVERSIGHT OF WELL DRILLING AND INSTALLATION ACTIVITIES

Drilling and installation of groundwater monitoring wells at suspected and known hazardous waste sites is generally done to characterize the sites in terms of the presence and types of ground water contaminants, their concentrations and corresponding locations, their fate and transport, and ultimately the risk to the surrounding environment and human health. In accordance with CERCLA Section 104(a), well drilling and installation activities may be conducted by potentially responsible parties (PRPs). This chapter describes the activities that an oversight assistant should conduct and the factors to be considered during oversight of PRP well drilling and installation activities.

This chapter is not intended to provide a comprehensive description on how to drill and install ground-water monitoring wells, but is a limited discussion of specific activities and considerations that are important from an oversight perspective. This chapter is based on other, more complete well drilling and installation technical documents and should not be considered a substitute for such documents. Specifically, this chapter includes information on:

- Initial oversight;
- Borehole advancement;
- Well installation and design; and
- Post-installation.

The organization of this chapter corresponds to the field activity report for oversight of well drilling and installation activities (see Section C.5 in this Appendix). This chapter discusses the elements of the checklist in a manner that will support oversight assistants with varying experience in conducting effective field oversight.

C.1 INITIAL OVERSIGHT ACTIVITIES

There are a number of activities that the oversight assistant should perform before well installation begins. These activities will help the oversight assistant become familiar with the planned drilling activities as well as the health and safety requirements. In addition, initial oversight activities will help the oversight assistant to organize and plan the resources for oversight, coordinate with other parties involved at the site, and make the necessary preliminary observations at the site.

The initial oversight activities for well drilling and installation are generally the same as those described for sampling and analysis activities. These activities include preparing for oversight by reviewing the appropriate documents such as the work plan, the sampling and analysis plan (SAP), and the health and safety plan (HSP); securing the necessary oversight tools; coordinating plans and schedules with key personnel; and conducting preliminary on-site activities such as identifying the location, number, and type of wells that will be drilled; the equipment, techniques, and procedures that are planned for well drilling and installation; and the procedures for recordkeeping and documentation. Additional preliminary on-site activities

include touring the site, checking the decontamination area/clean area, and calibrating field analytical equipment.

Detailed guidance on conducting most of these activities is presented in Appendix B, Oversight of Sampling and Analysis Activities. For well drilling, the oversight assistant should focus attention on the objectives of the drilling program and, when conducting oversight activities, follow the same general approach for making judgments in the field as detailed in Appendix B. As an example, if a characterization objective is to determine the horizontal extent of ground-water contamination downgradient of a manufacturing facility, the oversight assistant should not allow a well location to be moved upgradient of the facility regardless of the reason. To make this decision, the oversight assistant should also be familiar with the site conditions, such as the general direction of ground-water flow. To determine the objectives of the drilling program, the oversight assistant should refer to the work plan, SAP, and drilling specifications and should consider the following:

- Site background and the history of previous activities at or concerning the site;
- Suspected contaminants and the reason for concern (for example, health effects, surrounding population, or migration of contamination);
- Delineation of contamination and possible pathways of migration; and
- Physical characteristics of the soil or bedrock such as grain-size distribution, permeability, and cohesiveness.

Other initial oversight activities specific to well drilling and therefore not described in Appendix B include reviewing the location and number of boreholes and the type of drilling equipment specified.

The oversight assistant should be familiar with the planned location and number of boreholes designated in the work plan and should compare the plan with the actual number and location of boreholes drilled in the field. A site visit by all parties to select boring locations is strongly suggested. The oversight assistant should not delay the PRP's activities to check compliance with the work plan, but rather should gather information by observing the PRP or by conversing with the field supervisor at the beginning of each day. If the field supervisor gives a briefing and safety meeting at the start of each day, this is a good time for the oversight assistant to gather information.

Frequently, borehole locations will be modified in the field, usually when access to a planned well location is obstructed by an unforseen physical barrier. For example, unexpected utilities or refusal may be encountered during drilling. Also, changes in weather conditions may make a planned drilling location inaccessible to a drill rig. The oversight assistant should make a note in the field activity report of any changes in the drilling location and should use his/her judgment to evaluate whether the change is reasonable. To make this evaluation, the oversight assistant should consider the objectives of the well drilling and installation activities as described in the work plan and the SAP. PRP suggestions for changes in borehole locations may require additional wells if the PRP changes result in inadequate data.

If the oversight assistant feels that a change in borehole location might adversely affect the integrity or usefulness of the well, a discussion should be

held with the field supervisor and the outcome reported to the RPM at a reasonable time thereafter. If the dispute cannot be resolved, the oversight assistant should follow up with the RPM at the first available moment. Conversely, preliminary data gathered from previous boreholes might suggest better locations for determining the extent of contamination.

Before arriving onsite, the oversight assistant should be familiar with the types of well drilling and installation equipment designated in the work plan and should compare this equipment to the equipment being used at the site. The oversight assistant should focus attention on the major types of equipment, such as the type of drill rig, casing diameter, type and length of well screen and risers, and filter pack and annular sealant materials. The size of the drill bit or the type of drill rod coupling should be compatible with the well design criteria and specification in the work plan, but are of minor concern during preliminary on-site activities.

If the major type of equipment the PRP has at the site is different from what was expected, the oversight assistant should refer to the detailed information on well drilling and installation sampling activities (Section C.2) to evaluate the validity of the equipment substitution, and should notify the RPM. The assistant should also pay attention to the use of the equipment during drilling and installation activities. If the oversight assistant feels that the equipment is not acceptable, a discussion should be held with the field supervisor and the outcome reported to the RPM at a reasonable time thereafter. If the dispute cannot be resolved, the oversight assistant should follow up with the RPM at the first available moment.

C.2 BOREHOLE ADVANCEMENT

Installation and placement of a ground-water monitoring well is preceded by drilling a borehole. Advancing the borehole consists of drilling the borehole, and includes sampling subsurface formations to define site stratigraphy (and soil contamination) as well as taking steps to prevent contaminated soil zones from contaminating other zones. To help ensure that the objectives of a ground-water monitoring well program are met, the essential elements involved in borehole advancement should be performed effectively. Specifically, unless site conditions require changes, the drilling activities should be conducted in accordance with the approved work plan, SAP, and drilling specifications. In addition, as with any contaminated site, drilling and sampling equipment must be properly decontaminated to prevent cross-contamination, and drilling waste must be properly managed.

C.2.1 Drilling Activities

Drilling activities include finalizing borehole location, selecting the appropriate drilling method, mobilizing the necessary equipment, and conducting the drilling. In addition, drilling activities include properly managing drilling wastes such as drill cuttings or drilling muds, as well as reducing the potential for spread of contamination between stratigraphic layers.

Well Location The planned location and number of wells designated in the work plan, SAP, or drilling specifications are usually the result of a geological reconnaissance or

a preliminary borehole program. A geological reconnaissance program is a general exploratory survey of the main features of a region, conducted to define the geology beneath the site area as well as identify ground-water flow paths. This study is usually preliminary to a more detailed survey and thus determines potential pathways of contaminant migration.

Geological reconnaissances depend on the existing database for a particular site and involve direct field methods such as boring programs as well as indirect methods of geologic investigation such as geophysical surveys. Sites having little existing information concerning site setting and relevant geologic features may require more detailed work than sites with a considerable database. Thus, the PRP's work plan, SAP, or drilling specifications may rely heavily on existing reports, maps, and available literature to characterize the hydrogeology of the site. If more information is necessary to determine suitable groundwater monitoring well locations, boring programs or geophysical surveys will be conducted prior to the initiation of drilling activities (however, it is not unusual for geophysical surveys to be conducted in conjunction with drilling activities). Thus, preliminary well locations are determined before oversight of well drilling and construction activities, although they may be modified on the basis of geophysical surveys after the oversight assistant has arrived at the site.

Geophysical surveys employ such indirect (instrument) methods as resistivity, electromagnetic conductivity, gradiometers and magnetometers, seismic reflection, and ground penetrating radar. Geophysical methods are used primarily to supplement direct information such as continuity of stratigraphy between boreholes, and to locate buried metallic objects such as drums or reinforced concrete. Magnetic methods detect metallic interference whereas seismic and radar devices detect strata structural discontinuities such as boulders or clay layers. Geophysical surveys can also detect contaminant plumes if resistivity or surface- soil- gas probes are used (although soil- gas monitoring, defining vertical and horizontal plume dimensions, may be regarded as a direct field method).

Geophysical surveys may be conducted in conjunction with a geological reconnaissance, or just prior to drilling. In either case, geophysical surveys may help to ensure that the preliminary well locations are suitable for drilling activities. If refusal is encountered (that is, a buried object stops drilling), or if the survey indicates that the well could be better placed, the well may generally be moved 5 to 10 feet (preferably downgradient) without constituting a change in well location (although the relocation of the well should be reported to the RPM). Beyond a 10-foot move, however, the well location should be respotted, with RPM approval, in accordance with the well program objectives.

Geologic Units

The oversight assistant should observe that as a borehole is drilled, the PRP's driller or qualified scientist maintain a detailed and sequential record of the progress of drilling through the geologic units encountered. The depths and thicknesses of the earth materials penetrated, soil description and classification, and unusual or significant conditions should be recorded in a boring log. (See Section C1.2.2 for information on field screening and logging.)

The geologic units encountered are important for determining the potential pathways and retention of contamination. Geologic units are also important

for well construction and operation. And, although documenting the depths and thicknesses of geologic units is generally more important for the PRP or its drillers, the oversight assistant should note the geologic units encountered during borehole advancement as a check on the information recorded in the site drilling log.

Depth of Borehole

The borehole depth is generally specified in the work plan, SAP, or drilling specifications and is determined by the geological reconnaissance or other ground-water elevation data so that the screened interval (or intake) of the well reaches the desired water-bearing unit. However, it may be necessary to deepen the borehole if the aquifer of interest is deeper than expected due to pumping from nearby production or treatment wells, temporal variations in recharge patterns from tidal effects or river stages, or drought.

Generally, the borehole should be deep enough so that the screened interval of the monitoring well is within the water-bearing unit of interest, regardless of periodic changes in water-level elevation. Exceptions to this are shallow or perched aquifers, and cases when it is desirable to have an immiscible layer in contact with the well screen for sampling or recovery. The oversight assistant should record borehole depth and any reasonable changes in borehole depth from the work plan. Significant deviations from the work plan (such as a borehole that stops short of the aquifer of interest) should be brought to the attention of the PRP field supervisor, and if not corrected, to the attention of the RPM.

Type of Drilling

The oversight assistant should be aware that a variety of well-drilling methods can be used in the installation of ground-water monitoring wells; the following are the most common methods: auger, rotary, and cable tool. Depending on the purpose of the well drilling program, one or more drilling methods may be employed for installing the same well. For example, if soil sampling is not required, rotary drilling may be preferred because it rapidly advances the borehole; however, cuttings lifted to the surface by a drilling fluid are generally sampled only for stratigraphy, and not for contamination. Sampling ahead of the borehole requires removing the drill string, and may be complicated by the presence of drilling fluid. By comparison, hollow-stem augers remain in place during sampling. Alternatively, cable tool drilling allows the collection of excellent formation samples, but is relatively slow. Table C-1 summarizes the advantages and disadvantages of the common drilling methods.

The selection and implementation of the actual drilling method(s) is a function of site-specific geologic conditions and sampling and analysis objectives. The drilling contractor will best know his/her own capability for successfully completing a well to the design depth. The drilling contractor, however, is generally not the best one to assess the associated sample representativeness. Regardless of the drilling method selected, it should minimize disturbance of subsurface materials and not contaminate the subsurface or ground water. (U.S. EPA, 1986a). For example, lubricant should not be used on drill rods.

Hollow-stem Augers

Hollow-stem augers are among the most frequently used tools when advancing a borehole in unconsolidated materials -- especially when soil sampling is required. The hollow-stem auger consists of a section of seamless steel tube with a spiral flight, an attached finger-type cutter head, and a center drill

TABLE C-1. DRILLING METHODS SUMMARY[1]

Drilling Technique	Depth Limitation (ft.)	Advantages	Disadvantages
Auger			
Hollow Stem	150 - 300	Ease of soil sampling. Drilling fluids normally not used. Well can be constructed inside auger; acts as casing.	Not suitable for drilling through upper or perched aquifers. Not suitable for consolidated formations.
Solid Stem	100 - 150	Good in moist, mainly cohesion-less soils, and medium-soft to stiff cohesive soils.	Transports contamination downward. Not suitable for undisturbed soil samples or Not suitable for undisturbed soil determining stratigraphy. Not suitable in caving formations without casing,, nor in very hard or cemented soils (e.g., containing boulders).
Mud Rotary	5000+	Rapid drilling. Can leave boring open during drilling. Good cutting samples.	Mud may plug or be lost to permeable zone. Slow or difficult for formations containing coarse gravel, or numerous stones and boulders. Mud can affect chemistry or borehole and groundwater samples, and operation of well without proper development.
Air Rotary	5000+	No drilling fluid contamination of ground water. Fast in hard rock and other consolidated formations.	Containment of drilling returns difficult; potential health and safety concern Strips volatiles. Not suitable for drilling through unconsolidated soils.
Cable Tool	1000+	Only small amounts of water added and removed from borehole. Suitable for caving,, and gravel or boulder formations. Good for sampling.	Slow. Casing must be used (does not seal off upper aquifers). Cable tool rigs may not be readily available.

[1] U.S. EPA, 1986a, 1987a

stem composed of drill rods with an attached center plug at the bottom (see Figure C-1). The hollow-stem auger is configured with adapters at the top of the drill stem and auger flight, allowing the auger to advance with the plug in place. This arrangement forces cuttings to the surface around the exterior of the auger during drilling, leaving the interior of the auger free of soil.

To obtain a soil sample, the center stem and plug are removed, and the appropriate sampler (for example, a split spoon) is driven ahead of the auger. Samples taken in this way are essentially undisturbed, since the disturbance caused by advancing the auger is less than that caused by driving casing (U.S. EPA, 1987a). Cuttings brought to the surface by the auger may also be sampled, although as disturbed samples, cuttings only provide an approximation of subsurface stratigraphy.

Auger drilling is usually limited to depths of approximately 150 feet (U.S. EPA, 1986a) in unconsolidated sands, and can "bind up" at shallower depths in clays. Hollow-stem augers are generally not used in formations with large boulders; however, small obstructions can often be moved or broken by hitting with a split spoon. Hollow-stem augers are also useful in drilling below the water table; the auger flights act as a casing in which the well may be placed. In heaving or flowing sand conditions, a fluid of known chemical quality (usually water) may be pumped down the inside of the hollow-stem auger, the weight of which produces a positive pressure head that may be sufficient to displace unconsolidated material from the auger. Hollow-stem augers should not, however, be used to drill through a confining layer unless the overlying aquifer is known to be uncontaminated. Unless a confined aquifer can be properly cased off (see Section C1.2.1), contaminated aquifers may communicate with (contaminate) lower stratigraphic units.

Solid-stem Augers

The use of solid-stem augers (Figure C-1) for monitoring well installation is generally limited to unconsolidated materials that will maintain an open borehole or consolidated sediments (unless casing is used to prevent caving in unstable soil when the auger is removed). The method is similar to hollow-stem augers except that the augers must be removed from the ground to sample, or to insert the well casing and screen. Solid-stem augers may be advanced to a depth of 100 to 150 feet, depending on soil conditions. As with hollow-stem augers, solid-stem augers transport disturbed soil samples to the surface with the auger blade, and should not be used to drill through confining layers without first casing off the overlying aquifer.

Mud and Water Rotary

In rotary drilling, the borehole is advanced by rapid rotation of the drilling bit which cuts, chips, and grinds the material at the bottom of the hole. The cuttings are removed by pumping drilling fluid (mud or water) down through the drill rods, out vents in the bit, and up the annular space between the borehole wall and drill rods (see Figure C-2). The drilling fluid also cools and lubricates the drilling bit, and serves to stabilize the borehole. Drilling fluid is pumped from a pit or tank, through a mud pump and the drill rods. The fluid returns to a settling pit, where the cuttings settle out from the slowed drilling fluid. The settling pit may contain several gates or divisions to enhance separation. The cuttings are periodically removed from the settling pit for disposal, and to lessen cross contamination from reintroduction of drilling fluids into the borehole. (In addition, efficient removal of cuttings also extends the service life of the drill rig mud pump.)

Figure C-1. Augers

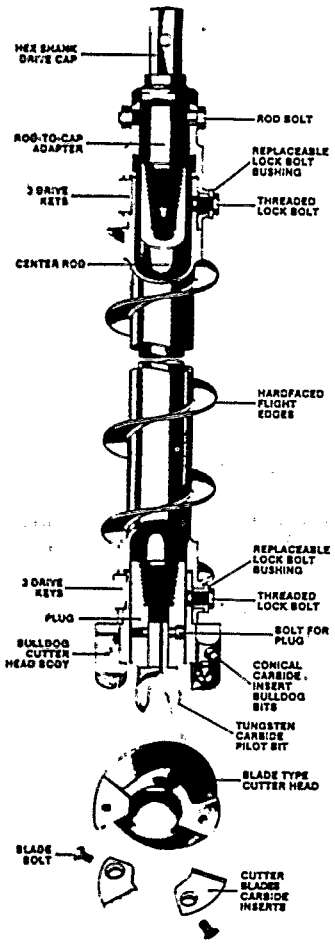

Hollow Stem Auger Assembly

Double-Flight Earth Rock Auger

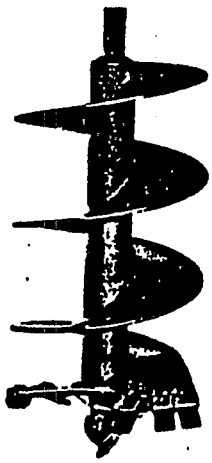

High-Spiral Auger

Figure C-2. Mud and Water Rotary Drilling

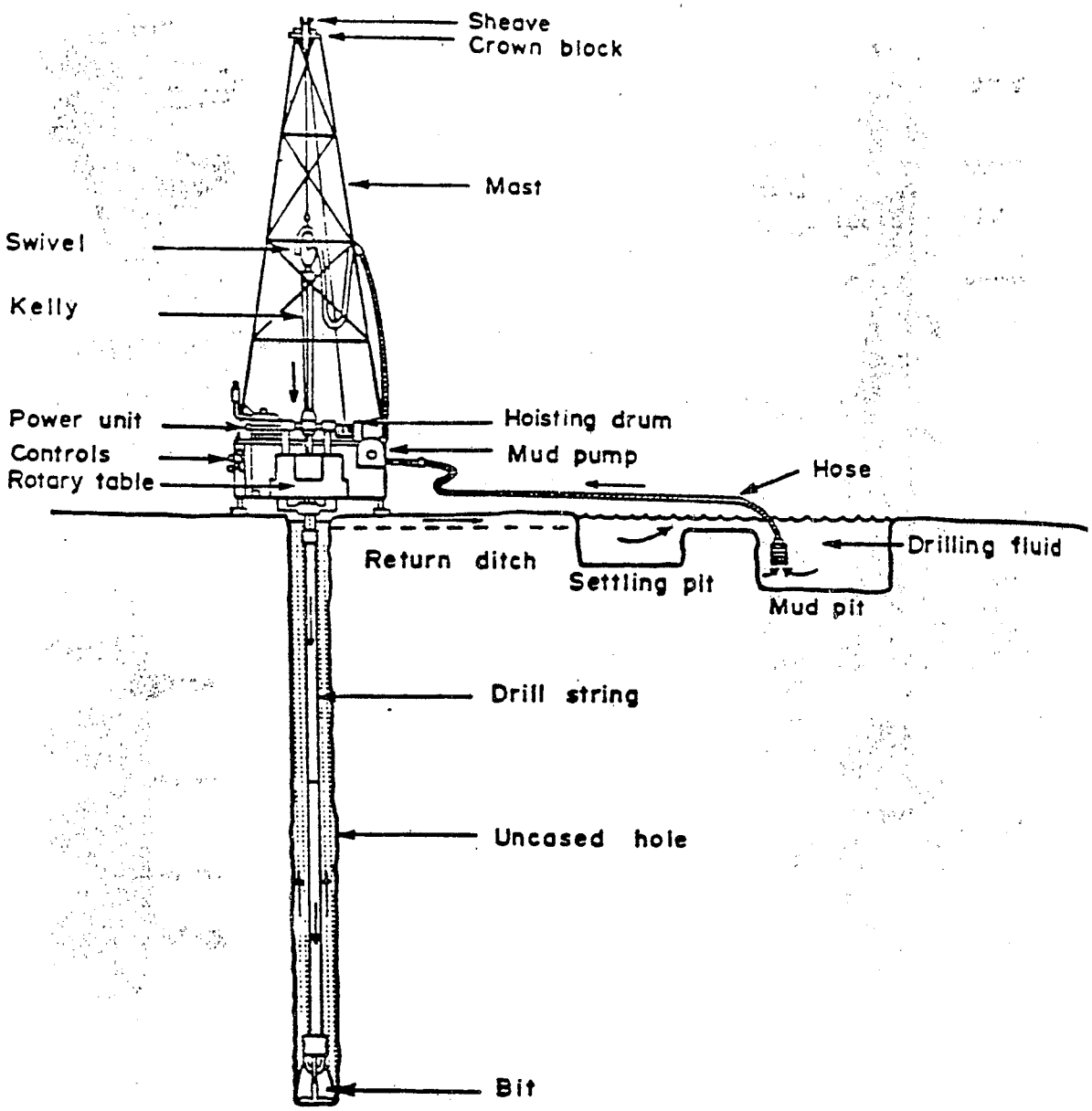

Air Rotary

Air rotary drilling operates in the same manner as mud or water rotary drilling, except air is the drilling fluid. Air rotary drilling is best suited for use in hard rock formations; casing is required to keep the borehole open when drilling in soft, unconsolidated formations. Because air is used as the drilling fluid, an important advantage of using air rotary drilling with proper well development is that it is less likely to affect the long-term quality of the ground water. In addition, since formation water is blown out of the hole along with cuttings, it is possible to determine when the first water-bearing zone is encountered. Where significant water inflow is encountered, noncontaminating foaming agents (such as nonphosphate detergents) may be added to help remove cuttings from the borehole (U.S. EPA, 1987a).

Formation sampling may be accomplished by collecting cuttings blown to the surface, or by removing the drill string and sampling the hole directly. One problem with air rotary drilling is that the forced air will strip volatiles and many semi-volatiles. Indeed, air rotary drilling can present significant health and safety problems because contaminated air and cuttings blown out of the hole can be difficult to contain. Therefore, when air rotary is used, shrouds, canopies, or directional pipes should be used to contain and direct drill cuttings (U.S. EPA, 1986a). In addition, cuttings should not be sampled for chemical analysis, and the well should be properly developed before sampling. (As with other types of drilling, generally a confined aquifer should be cased off; see Section C.2.1.)

Cable Tool

Cable tool drilling (or percussion or churn drilling) uses a heavy, solid steel, chisel-type drill bit suspended on a steel cable that, when raised and dropped repeatedly, chisels or pounds a hole through soil and rock (see Figure C-3). Although relatively slow, cable tool drilling is satisfactory for all formations, but is best suited for large, caving, gravel-type formations with cobbles or boulders such as glacial till, or for formations with large cavities above the water table such as karst (weathered limestone) terrain. Casing following the drill bit is needed when advancing a borehole through these formations and other unconsolidated materials to prevent cave-in.

Small amounts of water must be added to the hole as drilling progresses until ground water is encountered. The added water creates a slurry, which is periodically removed with a sand bailer or mud pump. Because only small amounts of water are required for cuttings removal (and no drilling muds are used), the cable tool method generates only modest amounts of drilling waste.

Cable tool drilling also permits the collection of excellent (undisturbed) formation and chemical samples. Sampling is accomplished by removing the drill string, bailing the cuttings, and using the appropriate downhole sampler. (See Section B.2.5 on subsurface sampling techniques).

Drilling Fluid

Drilling fluids are used for a variety of drilling methods and for a variety of purposes. These fluids are used to cool the drill bit in rotary drilling, help carry away drill cuttings in rotary and cable tool drilling, and keep the borehole open in certain mud or water rotary drilling and hollow-stem auger conditions. Drilling fluids for ground-water monitoring installation include water, drilling mud additives, air, and foaming solutions. The exact drilling fluid selection and proportioning will depend on the particular drilling method and site stratigraphy. For example, in mud rotary drilling, a satisfactory drilling fluid may be made by mixing water with suitable native clays (for

Figure C-3. Cable Tool String Assembly Components

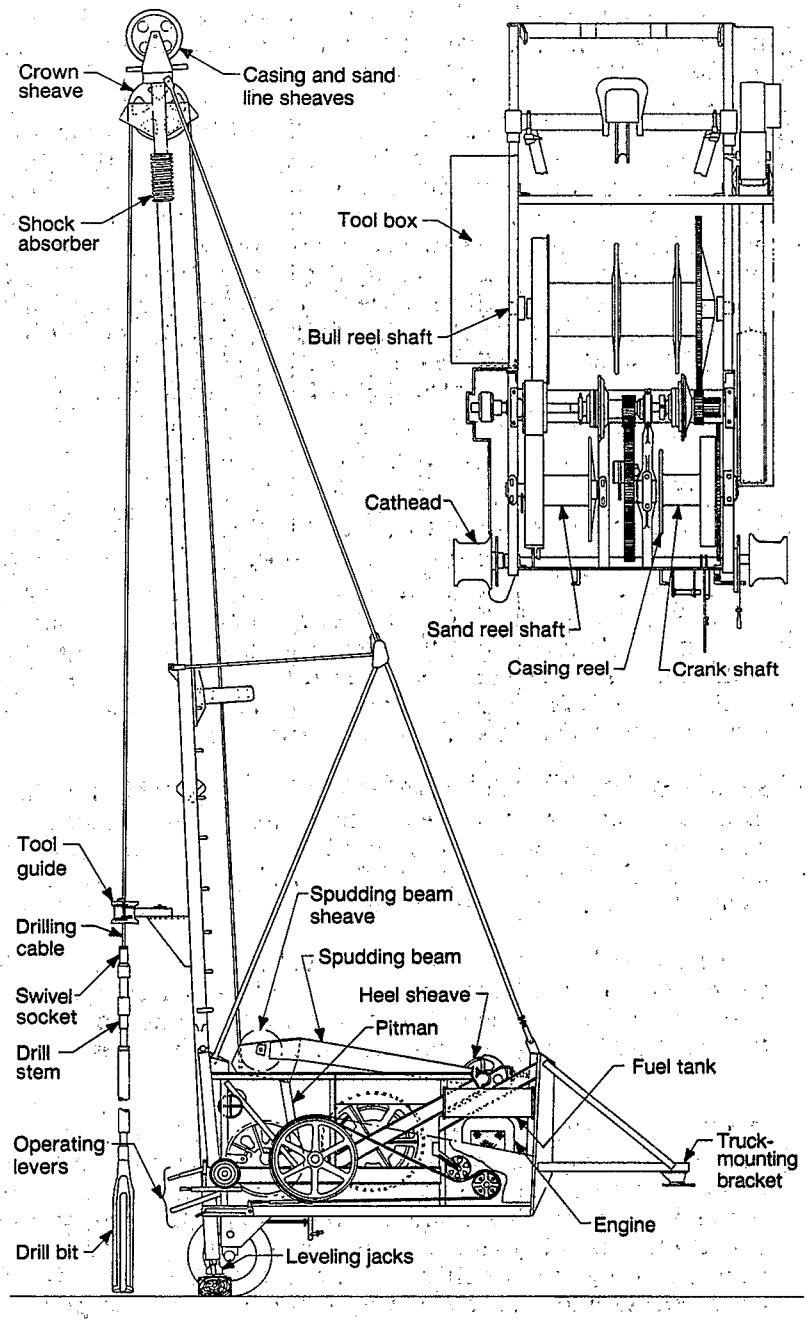

example, downhole) or commercial mud-forming products, consisting primarily of bentonite and various chemicals added to control dispersion, thixotropy, viscosity, and gel strength.

Regardless of the type of drilling fluid used, it is important that the drilling fluid does not affect the chemistry of ground-water samples, samples from the borehole, or the operation of the well. Only those drilling fluids approved in the Work Plan should be used. For air rotary drilling, the air from the compressor on the drill rig should be filtered to prevent oil from the compressor from entering the borehole. Drilling water or mud should be uncontaminated. (For instance, "city" water is preferable to surface waters of uncertain purity). If there is any doubt about its purity, drilling water or mud should be collected at the plumbing connection on the back of the drill rig and analyzed to eliminate the possibility of introducing contamination into the borehole. In addition, drilling muds may be lost to permeable or cavernous formations, potentially reducing effective porosity (and thereby well yield), as well as affecting local ground-water pH. Judicious selection of drilling mud additives and proper well completion and development can significantly lessen adverse effects of mud invasion into a formation.

Drilling Waste

One important aspect of oversight of drilling activities is management of drilling waste. Drilling waste consists of drill cuttings and materials removed from a borehole, including drilling fluids and well development water. Whether the drilling waste is known to be contaminated or not, native soils and waters should not be returned to the borehole (see Section C.3.1 for proper well completion procedures). In addition, if drilling fluids were used to advance a borehole through a contaminated horizon, the drilling fluid should be disposed appropriately as waste and replaced with clean drilling fluid before proceeding through cleaner zones (see Section C.2.1, Reducing Spread of Contamination).

Unless otherwise specified in the Work Plan, waste from drilling activities should be containerized (drummed) for proper disposal. Depending on the methods specified in the Work Plan, drilling waste may be stored onsite, pending the results of waste material sampling, surveyed using field analytical methods as described in Section B.2.8, or disposed as hazardous. Alternatively, if the drilling waste material is from a stratigraphic zone subject to removal and treatment, the waste may be stored pending the remedial action, subject to RPM approval.

Reducing Spread of Contamination

It is important during drilling activities to reduce the spread of contamination both at the well head and between stratigraphic layers. Reducing the spread of contamination at the well head involves properly managing contaminated drilling wastes; that is, containerizing for disposal drilling wastes suspected of contamination. In addition, drilling wastes can be directed and contained with directional pipes, and dedicated open tanks or lined pits can be used for drilling mud/cuttings to further reduce the spread of contamination.

Reducing subsurface spread of contamination requires good drilling practices to keep contaminated horizons (particularly aquifers) from contaminating lower stratigraphic layers. Specifically, this may involve casing off a borehole before continuing to drill through a confining layer, and disposing and replacing drilling fluids that have been used to advance the borehole through a contaminated horizon. Casing off a borehole consists of grouting the annular

space between the casing and the borehole sidewalls (see Section C.3.1). Casing off upper aquifers before further drilling is good drilling practice, even if the upper aquifer is known to be uncontaminated. (An exception is non-discrete aquifers or water-bearing zones of similar or compatible chemistry.)

C.2.2 Soil Sample Collection

Soil samples are collected in conjunction with borehole advancement for lithologic description, chemical analysis, or physical testing. While a number of physical and chemical samples must be sent for laboratory analysis, most can be screened and logged in the field.

Collection Interval

During borehole advancement, formation samples are typically collected every 5 feet or when a change in stratigraphy is observed. (PRPs may be required to submit continuous samples, however.) Each geologic unit encountered should be sampled for lithology because of the effect a unit may have on contaminant fate and transport. Soil samples for chemical analysis should be collected in accordance with the objectives of the Work Plan and SAP.

Sample Field Screening and Logging

Geological logging includes keeping a detailed record of drilling and a geological description of the materials encountered on a prepared form. Although field screening and logging in conjunction with well drilling activities is the responsibility of the PRP or its drillers, the oversight assistant should note the salient information regarding screening and logging, such as soil color, moisture, and consistency, as a check on the PRP's drilling log.

When drilling in soils or unconsolidated deposits, the PRP will usually record soil screening information on a standard soil boring log form (see Figure C-4). The soil boring log form to be used by the PRP should be submitted with the Work Plan and approved prior to conducting field work. In addition to basic information such as boring number and location, drilling equipment and method, and time and date, the PRP should record the following technical information for samples collected for physical testing or chemical analysis:

- Depth of sample below surface;
- Sample interval;
- Sample type and number;
- Length of sample recovered;
- Standard penetration test (ASTM-D1586) results, if applicable; and
- Soil description and classification.

In addition, all pertinent observations about drilling rate, equipment operation, or unusual conditions should be noted (U.S. EPA, 1987a).

Soil description and classification is normally done in accordance with the United Soil Classification System (USCS), as described in ASTM D2487 (see Figure C-5), the Visual-Manual identification procedure (ASTM D2488), or

Figure C-4. Soil Boring Log

PROJECT NUMBER	BORING NUMBER SHEET OF

SOIL BORING LOG

PROJECT _____ LOCATION _____

ELEVATION _____ DRILLING CONTRACTOR _____

DRILLING METHOD AND EQUIPMENT _____

WATER LEVEL AND DATE _____ START _____ FINISH _____ LOGGER _____

ELEVATION	DEPTH BELOW SURFACE	SAMPLE			STANDARD PENETRATION TEST RESULTS	SOIL DESCRIPTION	SYMBOLIC LOG	COMMENTS
		INTERVAL	TYPE AND NUMBER	RECOVERY	6"-6"-6" (N)	NAME, GRADATION OR PLASTICITY, PARTICLE SIZE DISTRIBUTION, COLOR, MOISTURE CONTENT, RELATIVE DENSITY OR CONSISTENCY, SOIL STRUCTURE, MINERALOGY, USCS GROUP SYMBOL		DEPTH OF CASING DRILLING RATE, DRILLING FLUID LOSS, TESTS AND INSTRUMENTATION

Soil Classification Chart

Criteria for Assigning Group Symbols and Group Names Using Laboratory Tests[A]				Soil Classification	
				Group Symbol	Group Name[B]
Coarse-Grained Soils More than 50 % retained on No. 200 sieve	Gravels More than 50 % of coarse fraction retained on No. 4 sieve	Clean Gravels Less than 5 % fines[C]	$Cu \geq 4$ and $1 \leq Cc \leq 3$[E]	GW	Well-graded gravel[F]
			$Cu < 4$ and/or $1 > Cc > 3$[E]	GP	Poorly graded gravel[F]
		Gravels with Fines More than 12 % fines[C]	Fines classify as ML or MH	GM	Silty gravel[F,G,H,I]
			Fines classify as CL or CH	GC	Clayey gravel[F,G,H]
	Sands 50 % or more of coarse fraction passes No. 4 sieve	Clean Sands Less than 5 % fines[D]	$Cu \geq 6$ and $1 \leq Cc \leq 3$[E]	SW	Well-graded sand
			$Cu < 6$ and/or $1 > Cc > 3$[E]	SP	Poorly graded sand[I]
		Sands with Fines More than 12 % fines[D]	Fines classify as ML or MH	SM	Silty sand[G,H,J]
			Fines classify as CL or CH	SC	Clayey sand[G,H,I]
Fine-Grained Soils 50 % or more passes the No. 200 sieve	Silts and Clays Liquid limit less than 50	Inorganic	PI > 7 and plots on or above "A" line[J]	CL	Lean clay[K,L,M]
			PI < 4 or plots below "A" line[J]	ML	Silt[K,L,M]
		organic	$\frac{\text{Liquid limit – oven dried}}{\text{Liquid limit – not dried}} < 0.75$	OL	Organic clay[K,L,M,N] / Organic silt[K,L,M,O]
	Silts and Clays Liquid limit 50 or more	Inorganic	PI plots on or above "A" line	CH	Fat clay[K,L,M]
			PI plots below "A" line	MH	Elastic silt[K,L,M]
		organic	$\frac{\text{Liquid limit – oven dried}}{\text{Liquid limit – not dried}} < 0.75$	OH	Organic clay[K,L,M,P] / Organic silt[K,L,M,O]
Highly organic soils		Primarily organic matter, dark in color, and organic odor		PT	Peat

[A] Based on the material passing the 3-in. (75-mm) sieve.

[B] If field sample contained cobbles or boulders, or both, add "with cobbles or boulders, or both" to group name.

[C] Gravels with 5 to 12 % fines require dual symbols:
GW-GM well-graded gravel with silt
GW-GC well-graded gravel with clay
GP-GM poorly graded gravel with silt
GP-GC poorly graded gravel with clay

[D] Sands with 5 to 12 % fines require dual symbols:
SW-SM well-graded sand with silt
SW-SC well-graded sand with clay
SP-SM poorly graded sand with silt
SP-SC poorly graded sand with clay

[E] $Cu = D_{60}/D_{10}$ $\quad \frac{(D_{30})^2}{D_{10} \times D_{60}}$

[F] If soil contains ≥ 15 % sand, add "with sand" to group name.

[G] If fines classify as CL-ML, use dual symbol GC-GM, or SC-SM.

[H] If fines are organic, add "with organic fines" to group name.

[I] If soil contains ≥ 15 % gravel, add "with gravel" to group name.

[J] If Atterberg limits plot in hatched area, soil is a CL-ML, silty clay.

[K] If soil contains 15 to 29 % plus No. 200, add "with sand" or "with gravel," whichever is predominant.

[L] If soil contains ≥ 30 % plus No. 200, predominantly sand, add "sandy" to group name.

[M] If soil contains ≥ 30 % plus No. 200, predominantly gravel, add "gravelly" to group name.

[N] PI ≥ 4 and plots on or above "A" line.

[O] PI < 4 or plots below "A" line.

[P] PI plots on or above "A" line.

[Q] PI plots below "A" line.

Figure C-5. Soil Classification Chart

by the Burmeister system. Although it is not necessary for the oversight assistant to be thoroughly familiar with these soil description methods, the oversight assistant should nevertheless note major soil differences (such as clays, sands, and gravels) during formation sampling. The oversight assistant should also note the basic color, moisture content (described as dry, moist, or wet), and relative density or consistency of the soil as determined by standard penetration tests (see Table C-2).

The purpose of noting basic soil properties, from an oversight perspective, is not to duplicate the PRP's drilling log. Rather, basic soil properties can provide direct evidence of contamination, unanticipated or perched aquifers, and confining layers. For example, soil discoloration may indicate contamination, whereas wet soil may indicate the presence of an aquifer. Additionally, clay encountered beneath an aquifer, as determined by visual inspection, would suggest the presence of a confining layer. As indicated in Section C.2.1, it is generally good practice to case off the borehole before drilling through a confining layer.

C.2.3 Decontamination

Two general methods of contamination control are: (1) establishing site work zones (site control), and (2) removal and decontamination. These methods are essential for maintaining health and safety as well as for preventing cross-contamination. Decontamination consists of either physically removing contaminants or changing their chemical nature to innocuous substances. The level of decontamination depends on a number of factors, the most important being the type of contaminants involved and the use of the equipment being cleaned. The more harmful the contaminant and the more directly the equipment contacts the sample, the more extensive and thorough decontamination must be.

Equipment

A variety of equipment and materials are suitable for decontamination of drilling and personnel protection equipment. Decontamination equipment is generally selected based on availability, ease of equipment decontamination, and disposability. Typical decontamination equipment includes high-pressure steam generators ("steam jenny"); soft-bristle scrub brushes or long-handle brushes to remove contaminants; water in buckets or garden sprayers, for rinsing; large galvanized wash tubs, stock tanks, or children's wading pools to hold wash and rinse solutions; large plastic garbage cans or other similar containers lined with plastic bags to store contaminated clothing and equipment; metal or plastic cans or drums to temporarily store contaminated liquids; and other miscellaneous gear such as paper or cloth towels for drying protective clothing and equipment.

Method

Personnel protective equipment, sampling tools, and other equipment are usually decontaminated by spraying with high-pressure steam, or scrubbing with detergent-water such as Alconox, using a soft-bristle brush, followed by rinsing with copious amounts of water. Drilling equipment (particularly the back and undercarriage of the drill rig and all downhole equipment) can be cleaned using a pressure hose or pressurized water or stream sprayer. Steam jennies are very effective at removing dirt and oils while generating minimal waste water. Special attention should be paid to the wheel wells and undercarriage of drilling rigs and other equipment, where large amounts of

Table C-2a. Soil Density\Consistency

Relative Density of Noncohesive Soil		
Blows/Ft	Relative Density	Field Test
0-4	Very loose	Easily penetrated with 1/2-inch steel rod pushed by hand
5-10	Loose	Easily penetrated with 1/2-inch steel rod pushed by hand
11-30	Medium	Easily penetrated with 1/2-inch steel rod driven with 5-lb hammer
31-50	Dense	Penetrated a foot with 1/2-inch steel rod driven with 5-lb hammer
>50	Very dense	Penetrated only a few inches with 1/2-inch steel rod driven with 5-lb hammer

Table C-2b. Consistency of Cohesive Soil

Blows/Ft	Consistency	Pocket Penetrometer (TSF)*	Torvane (TSF)	Field Test
<2	Very soft	<0.25	<0.12	Easily penetrated several inches by fist
2-4	Soft	0.25-0.6	0.12-0.25	Easily penetrated several inches by thumb
5-8	Firm	0.50-1.0	0.25-0.5	Can be penetrated several inches by thumb with moderate effort
9-15	Stiff	1.0-2.0	0.5-1.0	Readily indented by thumb but penetrated only with great effort
16-30	Very stiff	2.0-4.0	1.0-2.0	Readily indented by thumbnail
>30	Hard	>4.0	>2.0	Indented with difficulty by thumbnail

* TSF--Tons per square foot.

mud tend to accumulate. Sampling equipment used for organic contaminant samples should be rinsed with methanol or other suitable solvent, followed by distilled water. (Hexane is often used for PCB contamination.) The solvent should be saved for safe disposal (IT, 1987). Sampling equipment used for metal-containing samples should be rinsed with dilute nitric or hydrochloric acid, followed by distilled water.

Location

Location of decontamination areas depends on site-specific establishment of zones of decreasing contamination and site access control points. Essentially, the site is divided into three zones to reduce the migration of contaminants from the sampling area: (1) the exclusion zone, which is the area of the site where contamination does or could occur (including the borehole); (2) the contamination reduction zone, which provides a transition between contaminated and clean zones; and (3) the clean zone. Decontamination areas are located at the boundary between the exclusion and contamination reduction zones.

The size and shape of each zone (and thus the distance from drilling activities) is based on site-specific conditions. The oversight assistant should recognize that considerable judgment is needed to assure that the distances between zone boundaries are large enough to allow room for the necessary operations, provide adequate distance to prevent the spread of contaminants, and eliminate the possibility of injury due to explosion or fire outside the exclusion zone. The criteria used for establishing area dimensions and boundaries include but are not limited to, the following:

- Physical and topographical site features;
- Weather conditions;
- Air dispersion calculations;
- Contaminant toxicological characteristics; and
- Dimensions of the contaminated area.

Frequency

Downhole drilling equipment should be decontaminated between each borehole location, while sampling equipment should be decontaminated before each use. In the case where drilling fluid used to advance a borehole through a very contaminated horizon is disposed, the mud tank or pit, mud pump, and all downhole equipment should be decontaminated before the addition of fresh drilling fluid. Some equipment (such as gloves) may be disposable and, therefore, will not require decontamination.

Cross Contamination Prevention

The most effective method of preventing cross-contamination is to thoroughly decontaminate drilling and formation sampling equipment before each use. For downhole drilling equipment, this consists of decontamination between borehole locations, whereas sampling equipment should be decontaminated between sampling locations. Another method of preventing cross-contamination, if practical, is to drill the boreholes in formations of low contamination first (such as upgradient locations), proceeding to progressively more contaminated locations. (To prevent contamination due to borehole

sidewall sloughing and contamination between stratigraphic layers, see Section C.2.1.)

Off-site Disposal

Generally, decontamination solutions and contaminated drill cuttings, drilling fluids, and material classified as a hazardous waste must be manifested for disposal and taken to a licensed hazardous waste disposer. Since this policy differs from region to region (U.S. EPA, 1986d), the oversight assistants should be familiar with the applicable requirements. However, offsite disposal methods should be detailed in the drilling team's Work Plan and HSP and should be approved by the RPM.

All equipment that cannot be decontaminated, and any spent decontamination solutions, must be disposed of in accordance with applicable regulations. Clothing, tools, brushes, and other sampling equipment that cannot be decontaminated should be secured in drums or other containers, and either labeled and shipped offsite for disposal, or disposed of as a part of any planned remedial activity. Likewise, spent decontamination solutions should be transferred to drums that are labeled prior to disposal. Clothing and other equipment that will be decontaminated offsite should be secured in plastic bags before removal from the site.

C.3 WELL DESIGN AND INSTALLATION

Once the well borehole has been advanced to the appropriate depth, as specified in the Work Plan, SAP, or drilling specifications, the ground-water monitoring well is installed. Well design and installation consists of selecting and installing construction materials that are durable enough to resist chemical and physical degradation and do not interfere with the quality of groundwater sampling. In addition, well design and installation must prevent contaminant migration between strata.

Specific well components involved in well design and installation include well casings, well screens, filter packs, and annular seals or backfills. Figure C-6 illustrates the design of a typical groundwater monitoring well. Competent well design, materials selection, and well installation and completion are essential to achieving the goals of a ground-water monitoring program.

C.3.1 Well Design

Well design consists of selecting suitable materials for well construction, including well screens, well risers, and annular space sealants. The well materials must not degrade, absorb contaminants, or otherwise interfere with ground-water quality while in service. In addition, the specified materials must be designed to seal the borehole such that contaminated soil horizons cannot communicate with other horizons.

Well Screen

Well screen selection is important for collecting representative ground-water samples. A well screen allows water to enter a well, and also acts in conjunction with the sand or filter pack as a filtering device to keep sediment out of a well. (Sediment-laden water can lengthen filtering times and create chemical interferences with collected samples.) Normally, the open area of the screen should approximate the natural porosity of the formation.

Figure C-6. Typical ground-water monitoring well cross-section

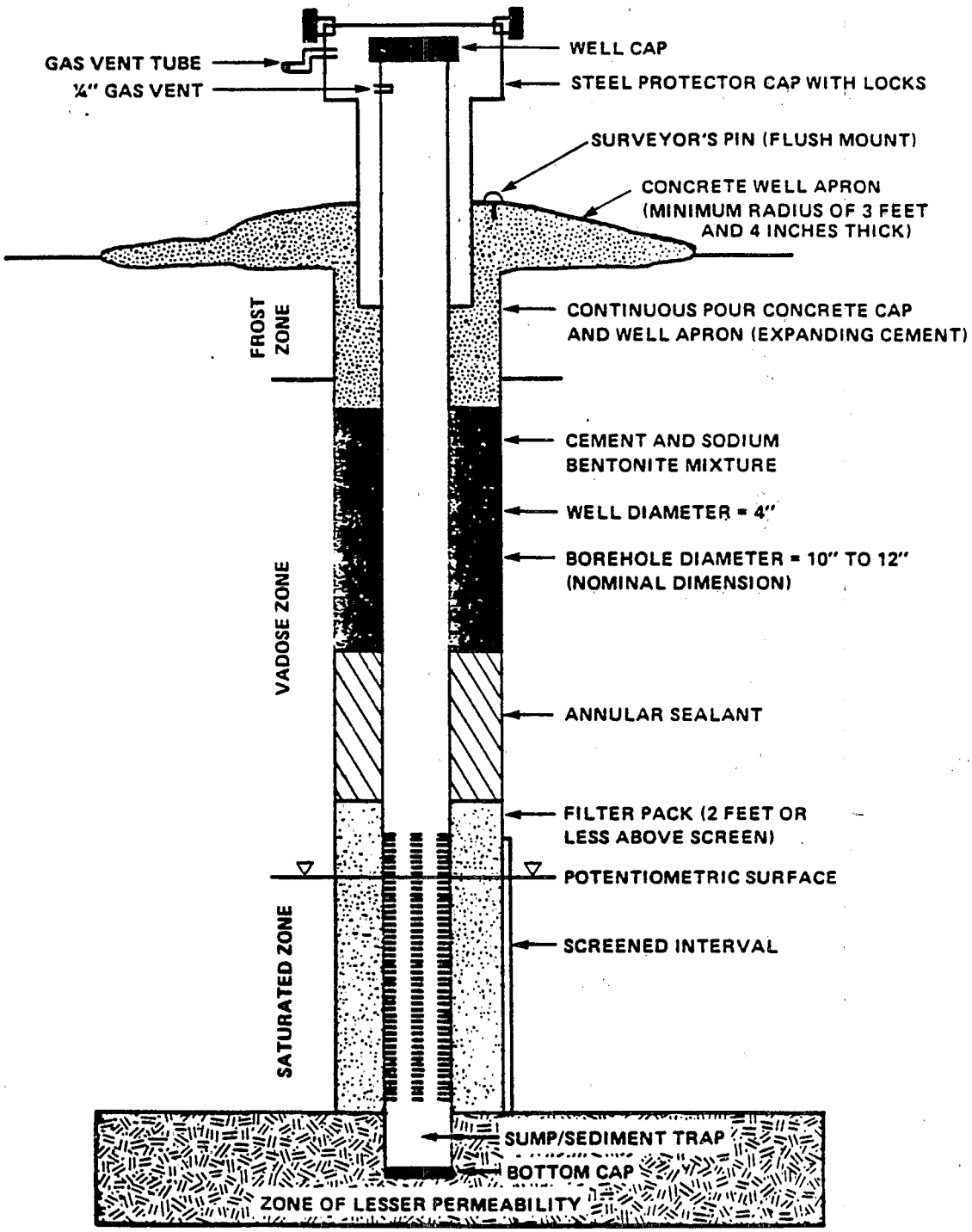

Screen slot openings should retain a high percentage of the sand or filter pack and be uniformly distributed around the circumference of the screen for effective development of the well. Ideally, slot openings should widen inward so that finer formation materials are pulled through the screen during development. Slots that are cut straight through the casing, or those of the gauze type, will tend to plug with fine material during development, significantly reducing the open area of the screen.

Commercially manufactured well screens typically work best provided the proper slot size is chosen. Generally, customized screens should not be used because these screens limit reproducibility of ground-water data. In addition, the oversight assistant should be aware that most EPA regions prohibit the use of screens containing slot openings sawed or torch-cut by the driller.

The oversight assistant should recognize that well screen length is a function of both the transmissivity (yield) of the aquifer and the objective of the monitoring program. Low-yield aquifers may require greater screen lengths to permit the collection of adequate sample volumes in a timely manner. Screens used for sampling discrete intervals are typically 2 to 5 feet in length. Screens that monitor to the top of the water table are typically 5 to 10 feet in length. Depending on the anticipated long-term changes in ground-water elevation, some of the screen is always above the water table. Thus, the screen will allow hydrocarbons or other low-density substances that float on the surface of the water ("floaters") to enter the well.

The oversight assistant may also observe the installation of a sump at the bottom of a monitoring well. A sump aids in collecting fine-grain sediments and results in prolonging the operating life of the screen. An additional benefit of using a sump is for collection of intermittent dense-phase contaminants ("sinkers"). A sump may also be used as a sampling cup in low-yield aquifers.

Well Riser

Well risers are lengths of well casing that are joined together rising from the well screen to the surface. The oversight assistant should note that the method of joining screens to casing and of assembling the well string (screens and casing) is done so as to prevent contamination of the samples. That is, glue, solvents, or lubricant are not to be used. Clean screens and casing should be joined mechanically by threads and couplings, or flush threads. Joints may be made water-tight by wrapping with Teflon tape or by placing an O-ring in the joint.

A gas vent at the top of the well string is generally specified in the Work Plan, SAP, or drilling specifications. Typically, a vent is installed by drilling a hole or cutting a slit with a hacksaw in the uppermost well riser. The vent equalizes pressure in the well when the ground-water level changes. For example, a drop in the water table would create a partial vacuum in a well without a vent, making the removal of a slip cap very difficult. Conversely, as a rise in the ground-water level could produce a puff of well vapors upon removal of the well cap, well vent installation represents a good safety practice.

Annular Space

Once the well string has been installed, the annular space should be a minimum of 2 inches completely around the inner casing. The space is then backfilled with: (1) filter pack over the screened interval, (2) annular sealant to

prevent migration of contaminants to the sampling zone, and (3) cement or bentonite grout to the frost line. Before installation of the well string, filter pack may be added to the borehole to adjust the final elevation of the well and the screened interval. Drill cuttings should not be used to backfill the annular space. As the annular space is backfilled a few feet at a time, any temporary drilling casing is removed, allowing the backfill to completely occupy the annular space.

Generally, filter pack is selected to roughly match the grain-size distribution of the screened interval formation. (The grain-size distribution curve for the filter pack is obtained by multiplying the 70-percent retained size of the finest formation sample by three or four.) Selection of too fine a pack reduces the yield of the well, causing longer sampling times, whereas selection of too coarse a pack allows fine silts, sands, and clays to enter the well. Coarse gravel and coarse sand are common filter pack materials. The oversight assistant should note that the pack material is chemically inert (non-carbonate), and has been obtained from reputable suppliers who have properly cleaned and bagged the material. Fabric filters should not be used as filter pack materials. Generally, filter pack is not washed or decontaminated before placement, although some investigators may require it. (The PRP may wish to collect and chemically analyze a sample of the filter pack in the event questions are raised regarding possible contamination from the pack.)

Filter pack is added to the annulus a few feet at a time. If the screened interval is entirely beneath the water table, the use of a tremie tube in placing the filter pack is recommended. If temporary drilling casing has been used to keep the borehole open, it is removed with each addition of filter pack, permitting the pack to completely fill the borehole. Failure to remove casing in a timely manner may bury it in place, rendering the well useless without subsequent removal of the well string and filter pack. Filter pack should generally be added until it is 2 feet or less above the screen (U.S. EPA, 1986a).

The filter pack must cover the entire screen, even if substantial amounts of pack are lost to cracks or voids in the formation. Thus, the actual amount of filter pack required may exceed the amount calculated to cover the screen. Conversely, if substantially less than the calculated amount of pack appears to cover the screen, bridging or borehole cave-in has probably occurred. Unless specified in the Work Plan and screened as such, the filter pack should generally not extend into a different overlying layer in the formation because this would permit seepage (and sampling) of different horizons. Each backfill horizon should be confirmed in the field with a tape measure.

The oversight assistant should observe the placement of approximately 2 feet of annular sealant above the filter pack. The annular sealant should prevent migration of contaminants to the sampling zone. The sealant should be chemically inert and have a permeability 10 to 100 times less than the surrounding formation. Generally, sodium bentonite pellets are placed immediately over the filter pack -- especially in the saturated zone. Pellets are most effective in the saturated zone because they will penetrate the water column; coarse grit sodium bentonite may hydrate and bridge before reaching the filter pack.

Although either bentonite or cement grout may be used to seal the annular space just below the frost line, cement grout should generally be used in the unsaturated zone above the annular sealant because the grout is less subject to cracking. Often, bentonite is added in the amount of 2 to 5 percent by weight

to the cement grout to help reduce shrinkage and to control the time of setting. The oversight assistant should ensure that the grout is prepared using clean water and, if necessary, placed in the borehole using a tremie pipe. Use of a tremie pipe minimizes particle separation and bridging, and ensures good sealing of the borehole from the bottom.

C.3.2 Well Installation

The major elements of well installation consist of:

- Well screen and casing installation;
- Filter pack placement; and
- Annular sealant placement.

To prevent contamination of ground-water samples, suitable well materials must be selected. In addition, all materials placed in the borehole must be clean and free of contamination.

Method of Well Completion

Ground-water monitoring wells may be installed in open boreholes in consolidated formations, or inside casing or hollow-stem augers in unconsolidated formations. In either case, the oversight assistant should note a spacing differential of 2 to 5 inches between the outer diameter of the well casing and the inner diameter of the auger/casing or the surface of the borehole. This annular space is necessary to ensure an adequate volume and proper placement of filter pack and annular sealants. A smaller annular space may result in a filter pack volume insufficient to prevent turbid and unacceptable ground-water samples, or may lead to bridging of filter pack and annular sealants, resulting in open spaces in the borehole that could allow migration of contaminants between strata. See Section C.3.2 for information on the calculated (and actual) volume of filter pack and sealant required.

Well Material

A variety of materials may be used for well screens and risers (well casing), including polyvinyl chloride (PVC), polypropylene, mild or galvanized steel, stainless steel, cast iron, teflon, other fluorocarbons (such as fluorinated ethylene propylene (FEP)), epoxy biphenyl, and polyethylene. The oversight assistant should make sure that the well screens and casing used are consistent with those specified the Work Plan. The oversight assistant should also be aware, however, that the type of material used for monitoring well casing may significantly affect the quality of ground-water samples. Steel casing may corrode, leaching iron, manganese, chromium, cadmium, or zinc. PVC, polyethylene, and polypropylene may release and absorb trace amounts of various organic constituents. In addition, solvent cement should not be used to attach sections of plastic casing because it has been shown to release significant quantities of organic compounds.

In general, the following factors should be considered when selecting screen and casing materials:

- Contaminants to be sampled;
- Chemical reactivity/inertness;

- Strength of material; and
- Ease of installation.

Generally, in the saturated zone, only inert (or noninterfering) materials should be used; in the unsaturated zone noninert materials may be used (U.S. EPA, 1986a). Teflon and glass are among the most inert materials for monitoring well installation. (However, glass is very difficult and expensive to use under most field conditions, and non-stick teflon may not form a water-tight seal with grout and annular sealants.) When monitoring for volatile organics, Teflon (fluorocarbons), stainless steel, or fiberglass-reinforced plastic generally are recommended. If trace metals or nonvolatile organics are the contaminants anticipated, PVC or plastic well casing and screens may be used. Site-specific conditions, however, may affect well material selection. For example, low pH may degrade metallic wells. The oversight assistant should refer to the Work Plan to note if the specified well material is being used.

Regardless of the material used for well construction, the material should be kept covered and clean. In addition, all well casing and screens should be clean before construction and placement in the borehole. Material selection may determine method of decontamination. For example, fluorocarbon casing should never be steam cleaned (see Section C.2.3 for more information regarding decontamination).

C.3.3 Well Completion

Once the annular space has been grouted to just below the frost line, the well is completed by constructing a surface seal and installing a protective surface casing.

Surface Seal

To minimize damage caused by frost heaving, the oversight assistant should observe that the remaining annular space is sealed with an expanding cement (grout) cap or surface seal. Frost heaving can be a major problem for wells installed in cold climates (particularly for plastic wells). As the soil freezes during the winter, it expands upward, occasionally pulling the casing apart. The surface seal should extend from below the frost line to the ground surface. If there is no frost line, or the frost line is essentially at the ground surface, the cement grout may be poured to the surface in lieu of a surface seal.

Surface Casing

Before the surface seal has set, a protective metal surface casing should be placed in the surface seal around the monitoring well. A concrete well apron should then be poured around the surface casing. The apron should have a minimum radius of 3 feet and be at least 4 inches thick. In addition, the apron should be inclined away from the well and surface casing to divert rainwater. The oversight assistant should note that the concrete well apron is poured using the same expanding cement as used for the concrete cap. In fact, with the exception of surface casing placement, the concrete cap and well apron should be poured continuously.

C.4 POST INSTALLATION

Post-installation activities consist of well development and ground-water monitoring. Well development is especially important for ground-water monitoring wells, because drilling fluid residues remaining in the borehole will affect the chemistry of the water samples. Well development also removes sediments and increases the well yield so that representative samples can be collected quickly. Adequate development must be verified before ground-water samples may be collected. (Collecting samples from a ground-water well and measuring ground-water parameters are discussed in Section B.2.2).

C.4.1 Well Development

After the ground-water monitoring well has been constructed, the well must be developed before sampling to restore the natural hydraulic conductivity of the formation, and to remove sediments as well as all traces of drilling fluids from the formation. Well development is accomplished by applying some form of energy (such as water surging) to the screen and formation. Well development is confined mainly to the zone immediately adjacent to the well, where the formation materials have been disturbed by well construction procedures or affected by the drilling fluid. Noting and managing the volume of development water is as important as noting the method of well development.

Method of Development

The oversight assistant should be aware that a variety of techniques are available for well development. Table C-3 lists some common development procedures. For example, the well may be overpumped (or pumped at a higher rate than when purged and sampled). However, because overpumping produces water flow in only one direction, sediments or fines may bridge (or clog) in the filter pack, restricting flow into the screen. In addition, if bridging subsequently becomes unstable and collapses, sediment may enter the well and affect sample quality. Effective well development procedures should cause reversals of water flow through the screen that will agitate the sediment and remove the finer fraction.

One widely used method of well development is to force water to flow into and out of the well screen by operating a plunger up and down in the casing, similar to a piston in a cylinder. The tool normally used is called a surge block. Before starting to surge, the oversight assistant should note that the well has been bailed to make sure water will flow into it.

The surge block is normally lowered beneath the water table, above or at the top of the screen. The initial surging motion should be gentle, allowing any material blocking the screen to break up, go into suspension, and then move into the well. As water begins to move easily both into and out of the screen, the surge block is lowered in steps, with the force of the surging increasing as the block is lowered. Development should begin above or at the top of the screen and move progressively downward to prevent the surge block from becoming sand-locked. The surge block should periodically be removed from the well during development, to remove (bail or pump) silt and fines from the well. Surging and cleaning should continue until little or no sediment can be pulled into the well (see Section C.4.1, Volume of Development Water).

Table C-3. Well Development Techniques

Technique	Use	Comments
Surge Block	Block moved up and down, imparting a surging action to screen and formation.	Good, non-contaminating technique. May clog formation, screen, or filter pack if used when clay streaks, mica, or angular particles are present.
Air lift	Compressed air injected into well, lifting water to surface.	Strips volatiles; must wait 48 hours to sample. Can induce metallic oxide formation/precipitation, clogging formation/pack.
Hydraulic jetting	High pressure water sprayed inside screen through jet nozzle.	Normally restricted to production. For very low yielding wells; water added to formation must be removed prior to sampling.
Pumping	Well is pumped until water clears, then turned off. Repeated with higher discharge until only clear water appears.	May lead to bridging, particularly if done without a swab, or at high discharge. Usually a finishing procedure following another development technique.
Acid[1]	Hydrochloric acid added to open borehole in limestone or dolomite formations to increase formation porosity (hydrofluoric and may be used in silicate formations.)	Must return to ambient aquifer pH before sampling; normally followed by another development method.
Explosives[1]	Detonation of explosives in boreholes in rock formations.	Enlarges borehole. Increases rock fractures.

[1] Not common for monitoring wells.

The oversight assistant should be aware that surge blocks sometimes produce unsatisfactory results in certain formations, especially when the aquifer contains many clay streaks: surging can cause the clay to plug the formation, reducing well yield. Surge blocks are also less useful if large amounts of mica or angular particles are present because they can align themselves perpendicular to the direction of flow, clogging the well screen or filter pack. Clogging can be minimized by gentle surging and avoiding overdevelopment when mica is present in the aquifer (Driscoll, 1987).

Another common method of well development is air lifting or air surging, although there is considerable controversy as to its appropriateness. In air surging, air is injected into the well to lift the water to the surface. After the water reaches the top of the casing, the air supply is shut off, allowing the water column to fall. The well is periodically pumped (usually by air-lift pumping) to remove sediment from the well. Air surging is controversial from an oversight perspective, because it strips volatiles. Samples for volatile organics should not be collected for at least 48 hours after developing wells by air surging.

Volume of Development Water

In addition to developing the well until little or no sediment can be pulled into the well, a sufficient volume of development water should be removed. Specifically, the oversight assistant should note that at least 3 to 5 well volumes plus the volume of water lost to the formation during drilling are removed; some regions require the removal of five well volumes. In addition, if water or acid has been used to develop the well, the well must be developed until ground-water parameters have returned to ambient conditions. That is, pH, conductivity, and temperature should be measured. When the parameters have stabilized (and no sediment enters the well), a sufficient volume of development water has been removed from the well (it is also good practice to monitor ground-water parameters as a check on the sufficiency of three to five well volumes plus water lost to the formation). When developing a well by air surging, an eductor and discharge pipe may be used to direct and contain development water. If a discharge pipe is not used or if the aquifer has an extremely low yield, ground-water parameters may be monitored in lieu of removing three to five well volumes during development.

Management of Development Water

Management of development water should be detailed in the Work Plan, SAP, or drilling specifications. Generally, development water should be containerized for analysis and disposal if classified as a hazardous waste. If large volumes of contaminated development water are anticipated, the water may be treated onsite, depending on the nature and expected concentration of the contaminants. For example, a granulated-activated charcoal filter may be used to strip development water of organics, allowing development water to be discharged (assuming organics are the only type of contamination). Such treatment would require laboratory support to monitor effectiveness and proper filter disposal. Alternatively, contaminated development water may be pumped to a treatment plant, or to the ground for percolation/recharge with RPM approval. The oversight assistant should consult Section C.2.1, Drilling Waste, for more information regarding management of development water.

C.4.2 Ground-Water Sampling

Once the well has been properly developed, samples may be collected.

Collecting samples from a ground-water well and measuring groundwater parameters are discussed in Section B1.2.2. If, after development of the well is complete, it continues to yield turbid ground water (that is, greater than 5 nephelometric turbidity units), the well should be redeveloped. If after redevelopment, the well still yields turbid ground water containing no organics, and the turbidity is due primarily to silt and clay, the well may have been improperly constructed (or developed), and may be unsuitable for ground-water monitoring (U.S. EPA, 1986b). Alternatively, the silt or clay unit may be low yielding.

C.5 DOCUMENTATION OF WELL DRILLING AND INSTALLATION ACTIVITIES

The oversight assistant is responsible for the documentation of field activities, including but not limited to well drilling and installation. Recordkeeping practices should include documenting the day's activities in a field logbook or on the field activity report as well as maintaining a photographic/video record of events. In addition, documentation may be used during litigation to verify the quality of the data collected. Therefore, it is essential that the oversight team keep detailed records of field activities, and thoroughly review all notes to verify that they are accurate before leaving the site.

C.5.1 Oversight Team Field Activity Report/Logbook

The oversight team field activity report and logbook provide daily records of significant events, observations, and measurements during field oversight. The field activity report and field logbook should provide sufficient data and observations to enable the oversight team to reconstruct events that occurred during well drilling and installation and to refresh the memory of oversight assistants if called upon to give testimony during legal proceedings. Because oversight field records (if referred to and admitted as evidence in a legal proceeding) are subject to cross examination, checklist and logbook entries should be factual, detailed, and objective.

The field activity report may be used in conjunction with the field logbook, or not at all. The advantage of the field activity report is a consistent method of documentation for all well drilling and installation activities. The field activity report may be used to augment or complement the field logbook.

The field activity report is a tool that has been developed specifically to assist the oversight assistant in the field. This report is in a checklist format, which is structured to remind the oversight assistant of the critical elements of the well drilling and installation activities while also providing a convenient means for documenting the field activities. The field activity report is used in conjunction with the SAP as a tool for reminding the oversight assistant of the specific planned activities, and for keeping a record of any activities that are not conducted according to the plans or that the oversight assistant considers noteworthy.

The well drilling and installation field activity report consists of five sections, including:

- Cover sheet;
- Initial activities;

- Method of borehole advancement;
- Monitoring well construction and design; and
- Post-installation activities.

The field activity report cover sheet provides a format for documenting facts concerning the general types of activities planned for the day, the personnel present onsite, the general conditions at the site (such as weather), and any changes in the plans for that particular day. A separate cover sheet is filled out for each day.

The initial activities section of the report provides a checklist of activities that the oversight assistant can use before arriving at the site to prepare for field oversight. This section also outlines preliminary activities that the oversight assistant should conduct at the site before well drilling. The method of borehole advancement section includes drilling activities as well as soil sample collection and decontamination methods. The section on monitoring well construction and design details the materials used for well construction and completion. The final section outlines well development and ground-water monitoring.

The field activity report is structured so that individual sections can stand alone and the oversight assistant can select the sections he is concerned with for a particular trip or day onsite. For example, if the only activity planned for a trip is drilling, the oversight assistant can remove the borehole advancement section from the field activity report and bring only the drilling section to the field.

The oversight assistant should transfer important information from the SAP or drilling specifications to the field activity report form (using the "comments" space) before leaving for the site. The assistant should then use the form to compare the planned activities or expected conditions with the actual events in the field (using the "Consistent With Plan" space) while at the site. Activity reports should subsequently be summarized into a progress report for RPM review. In addition, copies of the logbook or the field activity report should be made available for RPM review.

C.5.2 Oversight Team Photographic/Video Log

The oversight team should document some of the more critical field activities with a photographic or video camera. If a Polaroid camera is used for this purpose, the photographed activity, location, date, and time should be recorded directly on the photograph. If film must be sent out for development, the pertinent information should be recorded in the field logbook by exposure number, preferably in the order the pictures were taken. Because a camera exposure number may not exactly correspond with the film exposure, maintaining a separate sequential photograph log as part of the field logbook may help prevent confusion when matching the photograph to the appropriate activity. Developed photographs should be maintained in an album to prevent damage and preserve photographic quality. In addition, photographs should be arranged in sequential order, or grouped by well drilling or installation activity.

FIELD ACTIVITY REPORT

COVER SHEET

Site Name: Date:

Location:

Oversight Personnel:

PRP Field
Personnel:

Weather Conditions:

Planned Activities:

Approved Changes in Sampling Plan:

Important Communications:

Hours Oversight Assistant and Staff On-site:

Oversight Assistant Initials:

Date: _____
Site Name: _____
Initials: _____
Page # _____ of _____

	Consistent with Plan (Y/N)	Comments
C.1.1 PREPARATION		
1. Workplan		
Review		
a. Location and number of wells	_____	_____
b. Specified equipment	_____	_____
c. Field personnel qualifications/ responsibilities	_____	_____
2. Health and Safety Requirements		
Review		
a. Health & safety plans (PRP's & oversight assistant's)	_____	_____
b. Health & safety standard operating procedures	_____	_____
c. Exposure limits/action levels	_____	_____
d. Protective Gear	_____	_____
e. Other considerations	_____	_____

NOTES:

Date: _____
Site Name: _____
Initials: _____
Page # _____ of _____

	Consistent with Plan (Y/N)	Comments
3. Oversight/Equipment		
Bring equipment:		
a. Oversight checklists	_____	_____
b. Field logbook	_____	_____
c. Camera	_____	_____
d. Protective gear	_____	_____
e. Other	_____	_____
4. Coordination		
Confirm schedules with:		
a. PRPs	_____	_____
b. Drilling contractors	_____	_____
c. State or local environmental authorities (if appropriate)	_____	_____
d. EPA (if appropriate)	_____	_____
e. Other	_____	_____

NOTES:

Date: _____
Site Name: _____
Initials: _____
Page # _____ of _____

	Consistent with Plan (Y/N)	Comments
C.1.2 PRELIMINARY ON-SITE ACTIVITIES		
1. Review Personnel Qualifications	_____	_____
2. Record location and number of boreholes	_____	_____
3. Decontamination Area/Clean Area		
a. Decontamination area		
Number of decontamination areas	_____	_____
Physical location	_____	_____
Proximity to drilling/well locations	_____	_____
b. Clean area		
Number of clean areas	_____	_____
Physical location	_____	_____
Proximity to drilling/well locations	_____	_____
c. Check decontamination protocol	_____	_____

NOTES:

Date: _____
Site Name: _____
Initials: _____
Page # _____ of _____

	Consistent with Plan (Y/N)	Comments
4. Tour of Site	_____	_____
5. Equipment Calibration		
Field analytical equipment calibrated (if appropriate)	_____	_____
6. Other	_____	_____

NOTES:

Date: _____
Site Name: _____
Initials: _____
Page # _____ of _____

	Consistent with Plan (Y/N)	Comments

C.2 METHOD OF BOREHOLE ADVANCEMENT

1. Drilling Activities

a. Name of drilling company	_____	_____
b. Borehole number	_____	_____
c. Type of drilling	_____	_____
d. Well location	_____	_____
e. Elevation of location	_____	_____
f. Diameter of borehole	_____	_____
g. Type of drilling fluid	_____	_____
h. Amount of drilling fluid lost to formation	_____	_____
i. Management of drilling waste		
Drilling fluids	_____	_____
Cuttings	_____	_____
j. Well construction or boring log	_____	_____

NOTES:

Date: _____
Site Name: _____
Initials: _____
Page # _____ of _____

	Consistent with Plan (Y/N)	Comments
k. Methods to reduce spread of contamination at well head	_____	_____
l. Anticipated geologic units (composition and thickness)	_____	_____
m. Anticipated depth to ground water	_____	_____
n. Total depth of borehole	_____	_____

2. Soil Sample Collection
(See checklist on subsurface soil sampling for specific handling and shipping requirements.)

a. Sample retrieval method	_____	_____
b. Collection interval/depth for physical sample	_____	_____
c. Collection interval/depth for chemical sample	_____	_____
d. Field screening samples for analysis	_____	_____
Organic vapors (OVA, HNu, etc.)	_____	_____
Discoloration (heavy metals)	_____	_____
Geiger - Muehler (radiation)	_____	_____
Other	_____	_____

NOTES:

Date: _____
Site Name: _____
Initials: _____
Page # _____ of _____

	Consistent with Plan (Y/N)	Comments
e. Physical parameters measured in the field		
Moisture content	_____	_____
Plasticity (approximate)	_____	_____
Consistency	_____	_____
Grain size	_____	_____
Sorting	_____	_____
Other	_____	_____
f. Borehole logging method	_____	_____
3. Decontamination		
a. Equipment	_____	_____
b. Method	_____	_____
c. Location	_____	_____
Proximity to surface water or drilling activities	_____	_____
Proximity to population	_____	_____

NOTES:

Date: _____
Site Name: _____
Initials: _____
Page # _____ of _____

	Consistent with Plan (Y/N)	Comments
d. Frequency		
Rig and downhole equipment	_____	_____
Sampling equipment	_____	_____
e. Cross contamination prevention		
Well risers, screens, casings	_____	_____
f. Decontaminated fluids management		
On-site storage	_____	_____
Off-site disposal (meets RCRA/DOT/State requirements)	_____	_____

NOTES:

Date: _____
Site Name: _____
Initials: _____
Page # _____ of _____

	Consistent with Plan (Y/N)	Comments

C.3 MONITORING WELL CONSTRUCTION AND DESIGN

1. Well Construction		
a. Method of well completion	_____	_____
b. Well material kept covered and clean	_____	_____
2. Well Design		
a. Well screen		
Material/size (ID)	_____	_____
Slot size	_____	_____
Screen length	_____	_____
Sump length	_____	_____
Depth of screened interval (bottom/top)	_____	_____
Geologic unit over screened interval	_____	_____
b. Well riser		
Material/size (ID)	_____	_____
Method of joining sections	_____	_____
Length of well riser	_____	_____

NOTES:

Date: _____
Site Name: _____
Initials: _____
Page # _____ of _____

	Consistent with Plan (Y/N)	Comments
Elevation of top of riser	_____	_____
c. Annular space completion		
Filter pack material	_____	_____
Method of implacement	_____	_____
Depth of filter pack (bottom/top)	_____	_____
Volume of filter pack	_____	_____
Thickness of bentonite seal	_____	_____
Volume of bentonite	_____	_____
Type of annular sealant above bentonite	_____	_____
Volume of annular sealant	_____	_____
3. Well Completion		
a. Type of surface seal	_____	_____
Three-foot diameter surface pad	_____	_____
b. Depth of surface seal	_____	_____
Below frost line	_____	_____

NOTES:

Date: _____
Site Name: _____
Initials: _____
Page # _____ of _____

	Consistent with Plan (Y/N)	Comments
c. Surface casing		
Material/size (ID)	_____	_____
Method of implacement	_____	_____
Depth of surface casing	_____	_____
Half length of surface casing	_____	_____
Number of guard posts	_____	_____

NOTES:

Date: _____
Site Name: _____
Initials: _____
Page # _____ of _____

	Consistent with Plan (Y/N)	Comments
C.4 POST INSTALLATION		
1. Well Development		
a. Method of development	_____	_____
b. Amount of water retrieved from well	_____	_____
c. Management of development water	_____	_____
2. Ground-water Monitoring (see also sampling & analysis checklist)	_____	_____
Turbidity	_____	_____
pH	_____	_____
Specific conductance	_____	_____
Temperature	_____	_____
Other	_____	_____

NOTES:

APPENDIX C REFERENCES

Camp, Dresser, and McKee, undated, Basic Health and Safety Training Course Manual, CDM150.4

Driscoll, Fletcher, G., Groundwater and Wells, 2nd ed., Johnson Division, (St. Paul 1986).

IT Corporation, 1987, Manual of Sampling and Analytical Methods for Petroleum Hydrocarbons in Groundwater and Soil.

NUS Corporation, 1987, Hazardous Materials Handling Training Manual, NUS Corporation, Waste Management Services Group.

Planning Research Corporation, 1986, Protocol for Groundwater Inspecting at Hazardous Waste Treatment Storage and Disposal Facilities. Planning Research Corporation, Chicago, Il.

U.S. Environmental Protection Agency, (May 1978) Revised November 1984: NEIC Policies and Procedures. EPA-33-/9-78-001R.

U.S. Environmental Protection Agency, 1980a, Samplers and Sampling Procedures for Hazardous Waste Streams. EPA-600/2-80-018.

U.S. Environmental Protection Agency, 1981, NEIC Manual for Groundwater/Subsurface Investigations at Hazardous Waste Sites. EPA-600/2-85/104.

U.S. Environmental Protection Agency, 1986a, RCRA Ground-Water Monitoring Technical Enforcement Guidance Document. OSWER-9950.1

U.S. Environmental Protection Agency, 1986c, Engineering Support Branch, Standard Operating Procedures and Quality Assurance Manual. Region IV, Environmental Services Division.

U.S. Environmental Protection Agency, 1986d, REM II Health and Safety Assurance Manual. 999-HSI-RT-CGSY-1.

U.S. Environmental Protection Agency, 1987a, A Compendium of Superfund Field Operations Methods, two volumes. EPA-540/P-87/001, OWSER Directive 9355.0-1

U.S. Environmental Protection Agency, 1987b, Site Sampling and Field Measurements Handbook for Underground Storage Tank Releases. DRAFT

U.S. Environmental Protection Agency, 1989, Handbook of Suggested Practices for the Design and Installation of Groundwater Monitoring Wells, EPA 600/4-89/034.

KEY WORDS	PAGES
Administrative Order (AO)	1-3, 1-19, 1-26, 2-1, 2-10
Administrative Record	3-5
Airbill	B-70
Alternative Remedial Contracts Strategy (ARCS)	1-11, 2-3
Ambient air	B-52, B-55
Analytical techniques, ambient air	B-56
- Colorimetric tube	B-41
- Explosimeter	B-37, B-52, B-56
- Organic vapor analyzer (OVA)	B-41
- Oxygen detector	B-56
- Radiation survey meter	B-48, B-52, B-56
Analytical techniques, ground/soil/surface water	B-15, B-23, B-30
- Conductivity meter	B-16
- Dissolved oxygen (DO) meter	B-16
- Inorganic compounds detection	B-16
- Organic compounds instruments	B-17
- pH meter	B-16
Analytical techniques, soil vapor	B-40
- Colorimetric tube	B-41
- OVA	B-41
Annular space	C-12, C-21, C-22
ARARs	4-3, 7-4
Baseline Risk Assessment	1-2, 3-10, 3-13, 4-7, 4-8, 5-1, 5-6, 6-2, 7-4
- Exposure assessment	4-7, 5-3, 5-6
- Toxicity assessment	5-4
- Risk characterization	5-4
Bench-scale tests	6-3
Bill of lading	B-70
Borehole advancement	C-3, C-13
Borehold depth	C-5
Chain-of-custody record	B-64, B-70
Comprehensive Environmental Response, Compensation Liability Act of 1980 (CERCLA)	1-1, 3-6, 3-8, 7-4, 8-4
Comprehensive Environmental Response, Compensation, and Liability Information System (CERCLIS)	1-10, 3-6
Community Relations	3-5
Consent Decree (CD)	1-3, 2-1
Containerized waste	B-48
Contract Laboratory Program (CLP)	B-3, B-69
Cooperative Agreement (CA)	1-13
Corps of Engineers, U.S. Army (COE)	1-11, 2-5, 3-12, 4-7, 5-7, 6-10, 7-6, 8-4
Cost recovery	3-5
Cross contamination prevention	B-74, C-18
Custody Seals	B-70
Decontamination	B-5, B-72, C-16
Department of Justice (DOJ)	2-6
Dispute resolution	1-18
Drilling	C-3
- Auger	C-7
- Cable tool	C-10

KEY WORDS	PAGES
- Drilling fluid	C-5, C-10
- Drilling waste	C-12
- Rotary	C-7
Environmental Response Team (ERT)	2-5, 7-6, 8-4
Environmental Services Division (ESD)	1-31, 2-5, 2-13, 3-12, 4-3, 4-7, 5-7, 6-8, 7-6, 8-4
Feasibility Study (FS)	1-1, 3-4, 7-1, 7-3, 8-1, 8-3
Field sampling plan (FSP)	B-1
Financial Management System (FMS)	3-6
Fish and Wildlife Service, U.S. (FWS)	2-5
Geological logging	C-13
Geological reconnaissance	C-4
Geological surveys	C-4
Geologic unit	C-4
Ground water	B-17
Health and safety plan	3-1, 3-9, 3-11, B-2
Health assessment	4-3, 4-7, 5-4, 6-2
Holding times	B-69
Integrated Risk Information System (IRIS)	5-5
National Contingency Plan (NCP)	1-3, 1-9
National Priorities List (NPL)	1-1, 1-3, 1-13, 2-3
Octanol-water partition coefficient	B-30
Office of Emergency and Remedial Response (OERR)	1-15
Office of Waste Programs Enforcement (OWPE)	1-15
Organic vapor analyzer	B-37, B-41
Organic vapor detector	B-41, B-58
- Flame ionization detector (FID)	B-41, B-54
- Photoionization detector (PID)	B-41, B-54
Oversight tools	B-2
- Field activity report	B-2, B-81, C-30
- Photographic log	B-80, C-29
Oxygen detector	B-56
Pilot-scale study	6-2
Potentially Responsible Party (PRP)	1-1, 2-13
Preliminary Assessment (PA)	1-14
Quality assurance project plan (QAPjP)	3-9, B-1
Quality review activities	1-30, B-1, B-74

KEY WORDS	PAGES
Record of Decision (ROD)	1-10, 2-13
Remedial action (RA)	1-29, 3-4, 5-1, 6-1, 7-1
Remedial design (RD)	6-1
Remedial Investigation (RI)	1-1, 1-29, 2-1, 4-5, 4-6, 5-1, 6-1
Remedial Project Manager (RPM)	1-1, 1-9
Sample containers	B-57
Sample labels	B-59
Sample packing	B-66
Sample preservation	B-60
Sampler, ambient air	B-54, B-55
Sampler, ground water	
- Bailers	B-19, B-22
- Pumps	B-19, B-22
Sampler, liquid sludge/slurry	
- Bacon bomb sampler	B-45, B-47
- Coliwasa	B-43, B-47
- glass tube	B-43, B-46
Sampler, sediment (and nearly solid sludge/slurry)	
- BMH-60	B-14
- Grain sampler	B-12, B-32, B-51
- Hand push tube	B-14
- Ponar dredge	B-12, B-46
Sampler, soil vapor	
- Soil gas probe	B-40
Sampler, soil water	
- Lysimeter	B-26
- Membrane filter sampler	B-28
Sampler, subsurface soil	
- Split spoon	B-35
Sampler, surface soil	
- Sampling trier	B-32
Sampler, surface water	B-11
- Kemmerer or Van Dorn sampler	B-9, B-48
- Weighted bottle sampler	B-9, B-47
- Peristaltic pump	B-9, B-47
Samples, quality review	B-79
- Trip blanks	B-75
- Field blanks	B-75
- Equipment blank	B-76
- Background sample	B-76
- Split sample	B-77
Sampling and analyses plan (SAP)	1-21, 1-29, 2-10, 3-1, 3-9, B-1
- Field sampling plan (FSP)	3-9, B-1
- Quality assurance project plan (QAPjP)	3-9, B-1
- Quality assurance/quality control (QA/QC)	1-13, 3-1, 4-6
Shipping	B-69
Site characterization	2-10, 4-1, 7-2
Site file	2-5
Site inspection (SI)	1-14
Sludge/slurry	B-41
Soil vapor	B-37
Soil water	B-23
State Project Officer (SPO)	1-15
Statement of Work (SOW)	1-9, 1-28, 2-1, 2-10

KEY WORDS	PAGES
Sub-surface soil	B-35
Superfund Memorandum of Agreement (SMOA)	1-13
Surface casing	C-24
Surface seal	C-24
Surface soil	B-31
Surface water	B-6
Technical Support Team	2-1, 2-5
Technical Enforcement Support (TES)	1-3
Traffic reports	B-66
Treatability studies	1-28, 4-2, 6-1, 6-3
U.S. Geological Survey (USGS)	2-3, 2-5
Vadose zone	B-24
Well completion	C-24
Well design	C-19
Well development	C-25
Well installation	C-23
Work Plan	1-10, 2-1, 3-1, 3-4, 3-9, 3-11, 5-2

☆U.S. GOVERNMENT PRINTING OFFICE: 1991-548-18740529