United States
Environmental Protection
Agency

EPA/540/M5-89/004
April 1989

SUPERFUND INNOVATIVE
TECHNOLOGY EVALUATION

Demonstration Bulletin

In-Situ Soil Stabilization

International Waste Technologies

TECHNOLOGY DESCRIPTION: In in-situ stabilization technology immobilizes organics and inorganic compounds in wet or dry soils by using reagents (additives) to polymerize with the soils and sludges producing a cement-like mass. Two basic components of this technology are the Geo-Con/DSM Deep Soil Mixing System, a system capable of delivering and mixing chemicals with the soil in-situ, and the batch mixing plant that supplies the proprietary treatment chemicals (Figure 1).

The Geo-Con/DSM Deep Soil Mixing System, incorporating mechanical mixing and injection, consists of one set of cutting blades and two sets of mixing blades attached to a vertical drive auger, which rotate at approximately 15 rpm. Two conduits in the auger allow for the injection of the additive slurry and supplemental water. Additive injection is on the downstroke, with further mixing occurring upon auger withdrawal. The treated soil columns, whose diameter is 36 inches, are positioned to provide an overlapping pattern. In each sector, alternating primary and secondary soil columns exist, with all primary columns prepared before the secondary columns are augered.

The developer states that their proprietary additive generates a complex crystalline connective network of inorganic polymers and that the structural bonding in the polymer is mainly covalent. Furthermore, in the process, there is a two-phased reaction in which the contaminants are complexed first in a fast-acting reaction and then in a slow-acting reaction where the building of macromolecules continues over a long period of time. For each type of waste, the quantity of additives used varies and must be optimized.

WASTE APPLICABILITY: This technology can be applied to soils, sediments, and sludge-pond bottoms contaminated with organic compounds and metals.

DEMONSTRATION RESULTS: The IWT stabilization demonstration took place at a PCB-contaminated site in Hialeah, Florida. The preliminary results of the SITE demonstration showed that the processes produced a solidified mass with good physical

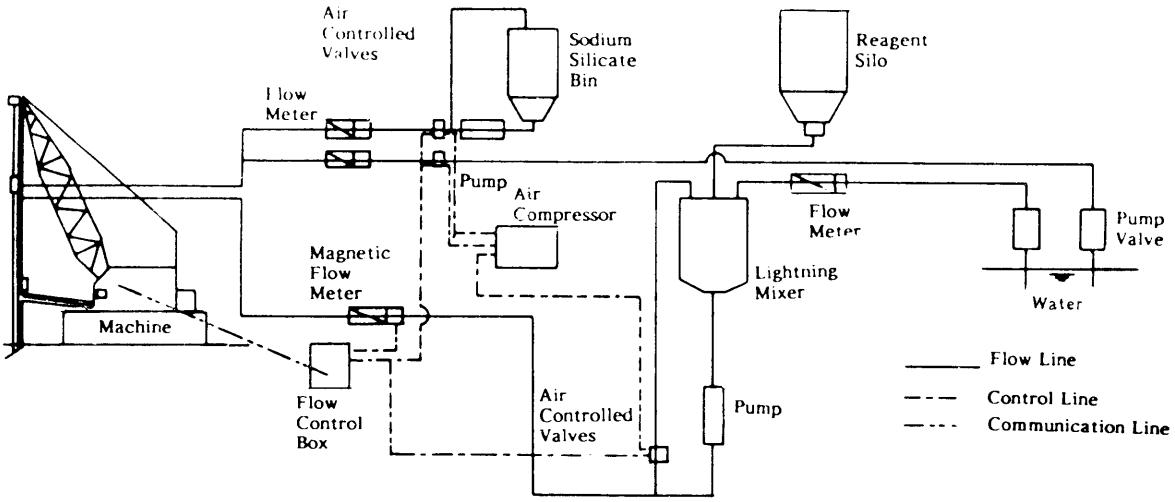

Figure 1. In-situ stabilization batch mixing plant process diagram.

United States
Environmental Protection
Agency

EPA/540/M5-89/004
April 1989

SUPERFUND INNOVATIVE
TECHNOLOGY EVALUATION

Demonstration Bulletin

In-Situ Soil Stabilization

International Waste Technologies

TECHNOLOGY DESCRIPTION: In in-situ stabilization technology immobilizes organics and inorganic compounds in wet or dry soils by using reagents (additives) to polymerize with the soils and sludges producing a cement-like mass. Two basic components of this technology are the Geo-Con/DSM Deep Soil Mixing System, a system capable of delivering and mixing chemicals with the soil in-situ, and the batch mixing plant that supplies the proprietary treatment chemicals (Figure 1).

The Geo-Con/DSM Deep Soil Mixing System, incorporating mechanical mixing and injection, consists of one set of cutting blades and two sets of mixing blades attached to a vertical drive auger, which rotate at approximately 15 rpm. Two conduits in the auger allow for the injection of the additive slurry and supplemental water. Additive injection is on the downstroke, with further mixing occurring upon auger withdrawal. The treated soil columns, whose diameter is 36 inches, are positioned to provide an overlapping pattern. In each sector, alternating primary and secondary soil columns exist, with all primary columns prepared before the secondary columns are augered.

The developer states that their proprietary additive generates a complex crystalline connective network of inorganic polymers and that the structural bonding in the polymer is mainly covalent. Furthermore, in the process, there is a two-phased reaction in which the contaminants are complexed first in a fast-acting reaction and then in a slow-acting reaction where the building of macromolecules continues over a long period of time. For each type of waste, the quantity of additives used varies and must be optimized.

WASTE APPLICABILITY: This technology can be applied to soils, sediments, and sludge-pond bottoms contaminated with organic compounds and metals.

DEMONSTRATION RESULTS: The IWT stabilization demonstration took place at a PCB-contaminated site in Hialeah, Florida. The preliminary results of the SITE demonstration showed that the processes produced a solidified mass with good physical

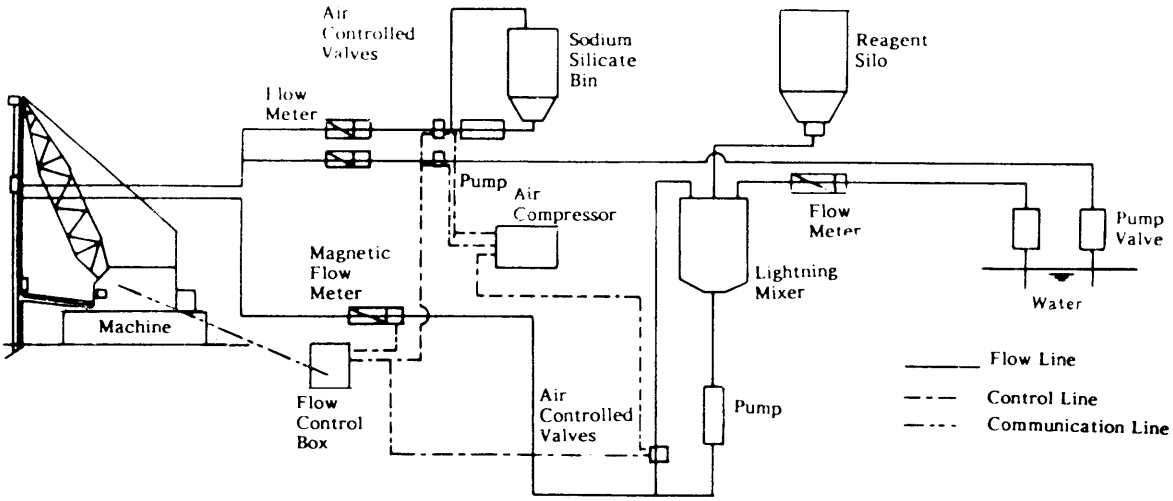

Figure 1. In-situ stabilization batch mixing plant process diagram.