United States
Environmental Protection
Agency

EPA/540/MR-94/522
September 1994

SITE
SUPERFUND INNOVATIVE
TECHNOLOGY EVALUATION

Demonstration Bulletin

Forager™ Sponge Technology

Dynaphore, Inc.

Technology Description: The Forager™ Sponge is an open-celled cellulose sponge incorporating an amine-containing chelating polymer that has selective affinity for dissolved heavy metals in both cationic and anionic states. The Forager™ Sponge technology can be utilized to remove and concentrate heavy metals from a wide variety of contaminated aqueous media such as groundwater, surface water, landfill leachate, and industrial effluents. The polymer preferentially forms coordination complexes with ions of transition-group heavy metals by providing ligand sites that surround the metal to form the complex. The order of affinity of the polymer for metals is influenced by solution parameters such as pH, temperature, and total ionic content. The following affinity sequence for several representative ions is generally expected by Dynaphore:

$Cd^{++} > Cu^{++} > Fe^{+++} > Au^{+++} > Mn^{++} > Zn^{++} > Ni^{++} > Co^{++} > Pb^{++} > Au(CN)_2^- > SeO_4^{-2} > AsO_4^{-3} > Hg^{++} > CrO_4^{-2} > Ag^+ > Al^{+++} > Ca^{++} > Mg^{++}$

The Sponge's ability to preferentially bind toxic heavy metals over common aqueous constituents such as Na^+, K^+, Ca^{++}, and Mg^{++} is particularly beneficial for the treatment of contaminated natural waters, which may contain high concentrations of these innocuous chemical species. In conventional ion exchange or precipitation technologies, valuable exchange sites or chemicals are wasted by removing these innocuous ions. The Forager™ Sponge's low affinity for these cations allows these ions, for the most part, to pass through the system, enabling absorption of the toxic heavy metals.

The Sponge is highly porous, thereby promoting high rates of absorption of ions. Absorbed ions can be eluted from the Sponge by techniques typically employed for regeneration of ion exchange resins. Following elution, the Sponge is ready for the next absorption cycle. The useful life of the media depends on the operating environment and the elution techniques used. Where regeneration is not desirable or economical, the Sponge can be compacted into an extremely small volume to facilitate disposal. The metal-saturated Sponge can also be incinerated, with careful attention given to the handling of resultant vapors.

The Sponge can be used in columns, fishnet-type enclosures, or rotating drums. For this demonstration, the Sponge was utilized in a series of four columns. Each column was comprised of a 1.7 ft^3, pressurized acrylic tube containing about 24 thousand 1/2 in. Sponge cubes confined within a fishnet bag.

Waste Applicability: According to the developer, the Sponge can scavenge metals in concentration levels of parts per million (ppm) and parts per billion (ppb) from industrial discharges, municipal sewage, process streams and acid mine drainage.

Demonstration Results: The Dynaphore Forager™ Sponge Technology was demonstrated at the NL Industries, Inc. site in Pedricktown, N.J. between April 5 to 8, 1994. Heavy-metal contaminated groundwater was treated over a continuous 72-hr operational period. Groundwater was pumped through a series of four columns at a treatment flow-rate of 1 gpm or 0.08 bed volumes/min. The columns were situated on a trailer-mounted unit which included a water heater to raise the influent temperature by approximately 25°F to increase reaction rates. A flow schematic of the system is shown in Figure 1. Four columns were reportedly needed to provide sufficient path length to meet the demonstration treatment goals.

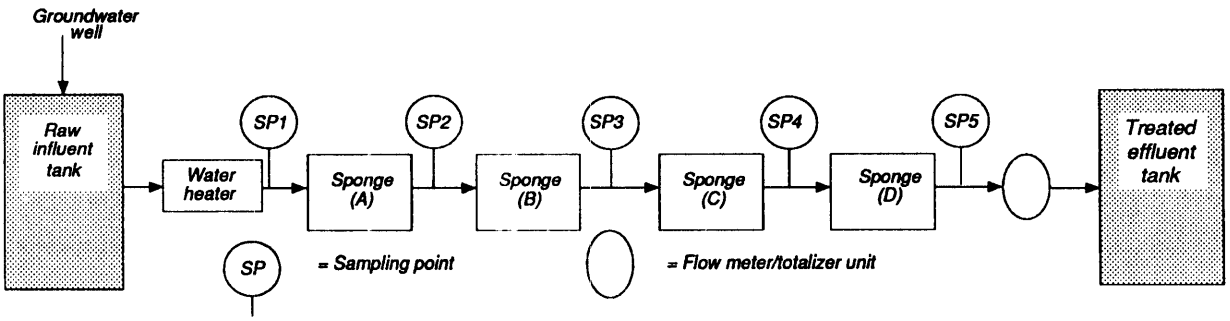

Figure 1. *Process flow diagram for the Dynaphore, Inc. Forager™ Sponge demonstration.*

Printed on Recycled Paper

Based on field and laboratory treatability tests, the developer claimed that the technology would achieve at least a 90% reduction of lead and copper, an 80% reduction of cadmium and a 50% reduction of chromium (as trivalent chrome) in the groundwater. Although concentrations of some of these metals exceeded cleanup goals for the site, the groundwater was spiked with solutions of copper, cadmium and lead to allow for effective evaluation of the developer's treatment claims. Treatment claims were evaluated by comparing analytical data generated by raw influent and final effluent grab samples. According to the developer, replacement or regeneration of the columns was not necessary since none of the columns were anticipated to become saturated (i.e., no further absorption capacity available for the metals of concern).

Based on the preliminary results of the SITE demonstration, the following conclusions were reached:

- Treatment claims for copper, cadmium, and lead were achieved. The developer, however, did not achieve treatment claims for chromium. Specifically, the performance was as follows:

Analyte	Average Influent Conc.(ug/l)	% Removal
Cadmium	537	90
Copper	917	97
Lead	578	97
Chromium^{+3}	426	32

- Effective removal of cadmium, copper, and lead was achieved in spite of a groundwater pH ranging from 3.1 to 3.7, a sulfate concentration of approximately 20,000 mg/l, and disproportionately high concentrations of cations such as calcium, magnesium, aluminum, sodium, and potassium. Concentrations of these cations ranged from 70 mg/l for magnesium, to 6000 mg/l for sodium. The technology's low affinity for these cations was supported by the low removal rates of these ions.

- Although treatment claims for cadmium and lead were met, some of the columns became saturated with these metals during the demonstration. Specifically, the first column became saturated with both cadmium and lead, while the second column became saturated with only cadmium. Saturation is reached when the effluent concentration of a given metal is approximately equal to the influent concentration. The total capacity of the Sponge for these two metals was significantly less than anticipated by the developer. The capacity for copper was much greater, as none of the columns were saturated with copper during the demonstration.

- Regarding disposal volume, four Sponge columns were hand compacted into one 55-gal drum during the demonstration. The developer has shipped four Sponge columns to a hazardous waste compacting firm to determine maximum compaction achievable for disposal.

An Innovative Technology Evaluation Report (ITER) describing the complete demonstration will be available in early 1995.

For Further Information:

EPA Project Manager
Carolyn Esposito
U.S. EPA, Building 10 (MS-106)
2890 Woodbridge Avenue
Edison, NJ 08837-3679
(908) 906-6895

United States
Environmental Protection Agency
Center for Environmental Research Information
Cincinnati, OH 45268

Official Business
Penalty for Private Use
$300

EPA/540/MR-94/522

BULK RATE
POSTAGE & FEES PAID
EPA
PERMIT No. G-35