EPA/540/R-94/514
July 1995

TEXACO GASIFICATION PROCESS

INNOVATIVE TECHNOLOGY EVALUATION REPORT

NATIONAL RISK MANGEMENT RESEARCH LABORATORY
OFFICE OF RESEARCH AND DEVELOPMENT
U.S. ENVIRONMENTAL PROTECTION AGENCY
CINCINNATI, OHIO 45268

Printed on Recycled Paper

NOTICE

The information in this document has been prepared for the U.S. Environmental Protection Agency (EPA) Superfund Innovative Technology Evaluation (SITE) Program under Contract No. 68-C9-0033. This document has been subjected to EPA's peer and administrative reviews and has been approved for publication as an EPA document. Mention of trade names or commercial products does not constitute an endorsement or recommendation for use.

FOREWORD

The U.S. Environmental Protection Agency is charged by Congress with protecting the Nation's land, air, and water resources. Under a mandate of national environmental laws, the Agency strives to formulate and implement actions leading to a compatible balance between human activities and the ability of natural systems to support and nurture life. To meet these mandates, EPA's research program is providing data and technical support for solving environmental problems today and building a science knowledge base necessary to manage our ecological resources wisely, understand how pollutants affect our health, and prevent or reduce environmental risks in the future.

The National Risk Management Research Laboratory is the Agency's center for investigation of technological and management approaches for reducing risks from threats to human health and the environment. The focus of the Laboratory's research program is on methods for the prevention and control of pollution to air, land, water and subsurface resources; protection of water quality in public water systems ; remediation of contaminated sites and groundwater; and prevention and control of indoor air pollution. The goal of this research effort is to catalyze development and implementation of innovative, cost-effective environmental technologies; develop scientific and engineering information needed by EPA to support regulatory and policy decisions; and provide technical support and information transfer to ensure effective implementation of environmental regulations and strategies.

This publication has been produced as part of the Laboratory's strategic long-term research plan. It is published and made available by EPA's Office of Research and Development to assist the user community and to link researchers with their clients.

E. Timothy Oppelt, Director
National Risk Management Research Laboratory

CONTENTS

	Page
Notice	ii
Foreword	iii
Figures	vii
Tables	vii
List of Abbreviations, Acronyms, and Symbols	viii
Conversion Factors	x
Acknowledgements	xi
Executive Summary	1
1 Introduction	7
1.1 Background	7
1.2 Brief Description of Program and Reports	8
1.3 Purpose of the Innovative Technology Evaluation Report (ITER)	10
1.4 Technology Description	10
1.5 Key Contacts	27
2 Technology Applications Analysis	29
2.1 Objectives - Performances versus ARARs	29
2.1.1 Comprehensive Environmental Response, Compensation, and Liability Act	30
2.1.2 Resource Conservation and Recovery Act	36
2.1.3 Clean Air Act	37
2.1.4 Safe Drinking Water Act	37
2.1.5 Clean Water Act	38
2.1.6 Toxic Substances Control Act	38
2.1.7 Occupational Safety and Health Administration Requirements	39
2.2 Operability of the Technology	40
2.3 Applicable Wastes	42
2.4 Key Features	43
2.5 Availability and Transportability of Equipment	44
2.6 Materials Handling Requirements	45
2.7 Site Support Requirements	45
2.8 Limitations of the Technology	46
3 Economic Analysis	47
3.1 Conclusion of Economic Analysis	47
3.2 Basis of Economic Analysis	49
3.3 Issues and Assumptions	50
3.4 Results	51
3.4.1 Site Preparation Costs	51
3.4.2 Permitting and Regulatory Requirements	52

CONTENTS (Continued)

Page

3.4.3 Capital Equipment 52
3.4.4 Startup 53
3.4.5 Labor 54
3.4.6 Consumables and Supplies 54
3.4.7 Utilities 54
3.4.8 Effluent Treatment and Disposal 54
3.4.9 Residual Waste Shipping and Handling 55
3.4.10 Analytical Services 55
3.4.11 Maintenance and Modifications 55
3.4.12 Demobilization 55
4 Treatment Effectiveness 56
4.1 Introduction 56
4.2 DRE 58
4.3 Slag and Solid Residuals Leachability 59
4.3.1 Test Slurry Leaching Characteristics 59
4.3.2 SITE Demonstration Results 62
4.4 Synthesis Gas Products 63
4.4.1 Synthesis Gas Composition 63
4.4.2 Products of Incomplete Reaction (PIRs) 63
4.4.3 Particulate Emissions 65
4.4.4 Acid Gas Removal 65
4.5 Metals Partitioning 66
4.6 Process Wastewater 67
5 Other Technology Requirements 69
5.1 Environmental Regulation Requirements 69
5.2 Personnel Issues 69
5.3 Community Acceptance 70
6 Technology Status 71
6.1 Petroleum Production Tank Bottoms Demonstration 71
6.2 El Dorado, Kansas Refinery Project 71

Appendices

I Vendor Claims 72
II Case Studies 78

FIGURES

Number		Page
1-1	Block Flow Diagram of MRL TGP during SITE Demonstration	12
1-2	Solids Grinding and Slurry Preparation Unit Process Flow Diagram	13
1-3	High Pressure Solids Gasification Unit Process Flow Diagram	16
1-4	Acid Gas Removal Unit Process Flow Diagram	21
1-5	Sulfur Removal Unit Process Flow Diagram	23

TABLES

Number		Page
ES-1	Evaluation Criteria for the Texaco Gasification Process Technology	4
2-1	Federal and State ARARs for the Texaco Gasification Process Technology	31
3-1	Treatment Costs Associated with the TGP	48
3-2	Capital Costs for the TGP Unit	53
4-1	Composition of Demonstration Slurry Feed	58
4-2	Destruction and Removal Efficiencies (DREs) for Principal Organic Hazardous Constituent (POHC) - Chlorobenzene	60
4-3	TCLP and WET-STLC Results - Lead and Barium	61
4-4	Synthesis Gas Composition	64
4-5	Mass Flow Rates and Total Concentrations of Lead and Barium in Slurry Feed and Solid Residuals	67
I-1	Syngas Composition Data—On-Line Analysis	74
I-2	Mass Flow Rates of Lead and Barium in Slurry Feed and Solid Residuals	75
II-1	Raw Syngas Composition and Heating Value	80

LIST OF ABBREVIATIONS, ACRONYMS, AND SYMBOLS

ACL	alternate concentration limit
Ar	argon
ARAR	Applicable or Relevant and Appropriate Requirements
ATTIC	Alternative Treatment Technology Information Center
Ba	barium
Btu	British thermal unit
CAA	Clean Air Act
CAL/EPA	California Environmental Protection Agency
CCR	California Code of Regulations
CERCLA	Comprehensive Environmental Response, Compensation, and Liability Act
CERI	Center for Environmental Research Information
CFR	Code of Federal Regulations
CH_4	methane
CO	carbon monoxide
CO_2	carbon dioxide
COS	carbonyl sulfide
cu	cubic
CWA	Clean Water Act
DOT	Department of Transportation
DRE	destruction and removal efficiency
dscf	dry standard cubic feet
EPA	United States Environmental Protection Agency
°F	degrees Fahrenheit
FS	feasibility study
ft	feet
FWEI	Foster Wheeler Enviresponse, Incorporated
FWQC	Federal Water Quality Criteria
gpm	gallons per minute
gr	grains
H_2	hydrogen
HPSGU	High Pressure Solids Gasification Unit
H_2S	hydrogen sulfide
h	hour
ITER	Innovative Technology Evaluation Report
kg	kilogram
kWh	kilowatthour
L	liter
lb	pounds
LPSGU	Low Pressure Solids Gasification Unit
m^3	cubic meter
MCL	maximum contaminant level
mg	milligram

LIST OF ABBREVIATIONS, ACRONYMS, AND SYMBOLS (Continued)

min	minute
MRL	Montebello Research Laboratory
N_2	nitrogen
NAAQS	National Ambient Air Quality Standards
NO_x	nitrogen oxide
NPDES	National Pollutant Discharge Elimination System
NTIS	National Technical Information System
ORD	Office of Research and Development
OSHA	Occupational Safety and Health Administration
OSWER	Office of Solid Waste and Emergency Response
Pb	lead
PCB	polychlorinated biphenyl
PCDD	polychlorinated dibenzodioxin
PCDF	polychlorinated dibenzofuran
PIR	product of incomplete reaction
POHC	principal organic hazardous constituent
PPE	personal protective equipment
ppm	parts per million
ppmv	parts per million, by volume
ppq	parts per quadrillion
PSD	prevention of significant deterioration
psig	pounds per square inch gauge
RCRA	Resource Conservation and Recovery Act
SARA	Superfund Amendments and Reauthorization Act
SCAQMD	South Coast Air Quality Management District
SDWA	Safe Drinking Water Act
s	second
SITE	Superfund Innovative Technology Evaluation
SO_x	sulfur oxide
SVOC	semivolatile organic compound
TCLP	Toxicity Characteristic Leaching Procedure
TGP	Texaco Gasification Process
THC	total hydrocarbons
tpd	tons per day
TSCA	Toxic Substances Control Act
TSD	treatment, storage, and disposal
VISITT	Vendor Information System for Innovative Treatment Technologies
VOC	volatile organic compound
WET-STLC	Waste Extraction Test-Soluble Threshold Limit Concentration
WWTU	wastewater treatment unit
yd	yard

CONVERSION FACTORS

	English (US)	x	Factor	=	Metric
Length:	1 foot (ft)	x	0.305	=	meter (m)
Area:	1 square foot (ft^2)	x	0.0929	=	square meter (m^2)
Volume:	1 gallon (gal)	x	3.78	=	liter (L)
	1 cubic foot (ft^3)	x	0.0283	=	cubic meter (m^3)
Mass:	1 grain (gr)	x	64.8	=	milligram (mg)
	1 pound (lb)	x	0.454	=	kilogram (kg)
	1 ton (t)	x	907	=	kilogram (kg)
Pressure:	1 pound per square inch (psi)	x	0.0703	=	kilogram per square centimeter (kg/cm^2)
	1 pound per square inch (psi)	x	6.895	=	kilopascal (kPa)
Energy:	1 British Thermal Unit (Btu)	x	1.05	=	kilojoule (kJ)
	1 kilowatthour (kWh)	x	3.60	=	megajoule (MJ)
Temperature:	(°Fahrenheit (°F) - 32)	x	0.556	=	°Celsius (°C)

ACKNOWLEDGEMENTS

This report was prepared under the direction of Marta K. Richards, EPA Superfund Innovative Technology Evaluation (SITE) Project Manager at the Risk Reduction Engineering Laboratory, Cincinnati, Ohio. Contributors and reviewers of this report included Donald A. Oberacker, Gregory J. Carroll, Jeffrey Worthington, and Gordon E. Evans of U.S. EPA's Risk Reduction Engineering Laboratory and Jerrold S. Kassman, John Winter, John Stevenson, and Richard B. Zang of Texaco Inc.

This report was prepared for EPA's SITE Program by Foster Wheeler Enviresponse, Inc. (FWEI) in Edison, New Jersey under EPA Contract No. 68-C9-0033. The FWEI SITE Project Manager for this project was Seymour Rosenthal. FWEI contributors and reviewers for this report were James P. Stumbar, Henry Njuguna, and Marilyn Avery. Michelle Kuhn provided expert word processing support.

The authors would like to acknowledge the assistance provided by Robert S. Burton III and the Montebello Research Laboratory operations staff in planning, preparing for, and supporting the SITE Demonstration and the Radian Corporation staff for their professional expertise in the collection and analysis of samples.

EXECUTIVE SUMMARY

This report summarizes the evaluation of the Texaco Gasification Process (TGP) conducted under the U.S. Environmental Protection Agency (EPA) Superfund Innovative Technology Evaluation (SITE) Program. The Texaco Gasification Process was developed by Texaco Inc.

The TGP is a commercial gasification process which converts organic materials into syngas, a mixture of hydrogen and carbon monoxide. The feed reacts with a limited amount of oxygen (partial oxidation) in a refractory-lined reactor at temperatures between 2,200° and 2,650°F[1] and at pressures above 250 pounds per square inch gauge (psig). According to Texaco, these severe conditions destroy hydrocarbons and organics in the feed and avoid the formation of undesirable organic by-products associated with other fossil fuel conversion processes. At such high operating temperatures, the residual ash melts—forming an inert glass-like slag.

Texaco reports that the syngas can be processed into high-purity hydrogen, ammonia, methanol, and other chemicals, as well as clean fuel for electric power.

The SITE Program evaluated the TGP's ability to treat hazardous waste materials containing both organic compounds and inorganic heavy metal. The primary technical objectives of the Demonstration were to determine the TGP's ability to:

- Produce a usable syngas product;
- Achieve 99.99 percent Destruction and Removal Efficiencies (DREs) for organic compounds; and
- Produce a non-hazardous primary solid residual—coarse slag—and secondary solid residuals—fine slag and clarifier bottoms.

[1]A list of conversion factors precedes the text.

Additionally, the Demonstration test results and observations were evaluated to:

- Develop overall capital and operating cost data; and
- Assess the reliability and efficiency of the TGP operations.

The TGP was evaluated under the EPA SITE Program in January 1994 at Texaco's Montebello Research Laboratory (MRL) in South El Monte, California, located in the greater Los Angeles area. The Demonstration used a soil feed mixture consisting of approximately 20 weight-percent waste soil from the Purity Oil Sales Superfund Site, Fresno, California and 80 weight-percent clean soil. The mixture was gasified as a slurry in water. The slurry also included coal as a support fuel and was spiked with lead and barium compounds (inorganic heavy metals) and chlorobenzene (volatile organic compound) as the Principal Organic Hazardous Constituent (POHC). Information on the TGP and results of the SITE Demonstration at the Texaco MRL are provided herein.

The findings of the TGP SITE Demonstration are as follows:

- The TGP produced a syngas that can be used as feed for chemical synthesis facilities or as a clean fuel for the production of electrical power when combusted in a gas turbine. The average composition of the dry synthesis gas product consisted of 37 percent hydrogen, 39 percent carbon monoxide, and 21 percent carbon dioxide. No organic contaminants, other than methane (55 ppm), exceeded 0.1 ppm. The average heating value of the gas, a readily combustible fuel, was 239 British thermal units (Btu) per dry standard cubic foot (dscf).
- The DRE for the designated POHC (chlorobenzene) was greater than the 99.99 percent goal.
- The average Toxicity Characteristic Leaching Procedure (TCLP) measurement for the coarse slag was lower than the regulatory levels for lead (5 milligrams per liter) (mg/L) and barium (100 mg/L). The average California Waste Extraction Test (WET)-Soluble Threshold Limit Concentration (STLC) measurement for the coarse slag was lower than regulatory value for barium (100 mg/L) and higher than the regulatory value for lead (5 mg/L).
- Volatile heavy metals, such as lead, tend to partition and concentrate in the secondary TGP solid products—fine slag and clarifier solids. The average TCLP and WET-STLC measurements for these secondary TGP solid products were higher than the regulatory limits for lead but lower than the regulatory limits for barium.
- Texaco estimates an overall treatment cost of $308 per ton of soil for a proposed transportable unit designed to process 100 tons per day (tpd) of soil with characteristics similar to that from

the Purity Oil Sales Superfund Site, based on a value of $1.00/million Btu for the syngas product. Texaco estimates an overall treatment cost of $225 per ton of soil for a proposed stationary unit designed to process 200 tpd of soil, at a central site, with characteristics similar to that from the Purity Oil Sales Superfund Site, based on a value of $2.00/million Btu for the syngas product.

- Based on the successful operation of the TGP during the SITE Demonstration and post-demonstration processing of the remaining slurry inventory, it is expected that in continuous operations, proposed commercial units can operate at on-stream efficiencies of 70 to 80 percent allowing for scheduled maintenance and intermittent, unscheduled shutdowns.

The TGP technology evaluation applied the EPA's standard nine criteria from the Superfund feasibility study (FS) process. Summary conclusions appear in Table ES-1.

Table ES-1. Evaluation Criteria for the Texaco Gasification Process Technology

Criteria								
Overall protection of human health and the environment	**Compliance with Federal ARARs***	**Long-term effectiveness and permanence**	**Reduction of toxicity, mobility, or volume through treatment**	**Short-term effectiveness**	**Implementability**	**Cost****	**Community acceptance**	**State acceptance**
Provides both short- and long-term protection by eliminating exposure to both organic and inorganic contaminants in soil.	Requires compliance with Resource Conservation and Recovery Act (RCRA) treatment, storage, and land disposal regulations (of a hazardous waste).	Effectively destroys organic contaminants and demonstrates a potential to immobilize inorganic heavy metals into a non-leaching glassy coarse slag.	Effectively destroys toxic organic contaminants and demonstrates a potential to immobilize inorganic heavy metals into the primary solid product, a non-leaching glassy coarse slag.	Emissions and noise controls are required to eliminate potential short-term risks to workers and community from noise exposure and exposure to contaminants and particulate emissions released to air during excavation, handling, and treatment prior to slurrying.	Treatability testing required for wastes containing heavy metals.	Large-scale, complex, high temperature, high pressure, transportable thermal destruction unit at approximately $308 per ton of waste soil.	Large-scale, ex-situ, high temperature, high pressure, thermal destruction unit may require significant effort to develop community acceptance.	If remediation is conducted as part of RCRA corrective actions, state regulatory agencies may require operating permits, such as: a permit to operate the treatment system, an air emissions permit, and a permit to store contaminated soil for greater than 90 days.
Prevents further groundwater contamination and off-site migration by destroying organic contaminants and demonstrating a potential to immobilize heavy metals into a non-leaching glassy, coarse slag.	Excavation and construction and operation of on-site treatment unit may require compliance with location-specific ARARs.	Site contaminants are destroyed or removed with residuals.	Reduction of soil to glassy slag reduces overall volume of material.		Large process area required.	A larger, stationary, centrally-sited plant with more effective integration with a syngas product user may reduce the overall cost to $225 per ton of waste soil.		

Table ES-1. (Continued)

Criteria								
Overall protection of human health and the environment	Compliance with Federal ARARs*	Long-term effectiveness and permanence	Reduction of toxicity, mobility, or volume through treatment	Short-term effectiveness	Implementability	Cost**	Community acceptance	State acceptance
Requires measures to protect workers and community during excavation, handling, and treatment.	Emission controls are needed to ensure compliance with air quality standards, if volatile compounds and particulate emissions occur during excavation, handling, and treatment prior to slurrying.	The potential immobilization of heavy metals into non-leaching glassy, coarse slag requires further testing for anticipated long-term stability.			Large-scale transportable 100 tpd unit on multiple transportable skids requires large scale remediation with on-site commitment of more than 50,000 tons of soil and 2 years of operation.	Simultaneous treatment of organic and inorganic contaminants with credits for resulting syngas product may overcome initial cost disadvantage.		
	Wastewater discharges to treatment facilities or surface water bodies requires compliance with Clean Water Act regulations.	Fine slag and clarifier solids may require further treatment, particularly when volatile heavy metals are present.			Initial transportable unit can be constructed and may be available in 24 months.			
	CERCLA defines drinking water standards established under the Safe Drinking Water Act that apply to remediation of Superfund sites.	Wastewaters require further treatment to effect long-term stability of contaminants and reuse of water.			Large size of unit and ex-situ thermal destruction basis for unit may provide delays in approvals and permits.			

Table ES-1. (Continued)

Criteria								
Overall protection of human health and the environment	Compliance with Federal ARARs*	Long-term effectiveness and permanence	Reduction of toxicity, mobility, or volume through treatment	Short-term effectiveness	Implementability	Cost**	Community acceptance	State acceptance
	Requires compliance with Toxic Substances Control Act treatment and disposal regulations for wastes containing polychlorinated biphenyls.							
	CERCLA remedial actions and RCRA corrective actions to be performed in accordance with Occupational Safety and Health Administration requirements.							

* Applicable or relevant and appropriate requirements.

** Actual cost of a remediation technology is highly site-specific and dependent on matrix characteristics. See Economic Analysis - Section 3 of this ITER.

SECTION 1
INTRODUCTION

1.1 BACKGROUND

The Texaco Gasification Process (TGP) has been used to gasify conventional fuels, such as natural gas, liquid petroleum fractions, coal, and petroleum coke for more than 45 years. More than 40 gasification plants are either operational or under development worldwide.

According to Texaco, wastes containing a broad range of hydrocarbon compounds have been gasified successfully. They have demonstrated gasification of coal liquefaction residues, verifying the nonhazardous content of the product and treated effluent streams. In a program sponsored by the California Department of Health Services, Texaco reports the successful gasification of California hazardous waste material from an oil production field. This program converted petroleum production tank bottoms to synthesis gas and nonhazardous effluent streams. Texaco has also gasified mixtures of municipal sewage sludge and coal. The data generated in these studies formed the basis for permit applications prepared by Texaco for commercial facilities in the United States. Texaco has also gasified surrogate contaminated soil (clean soil mixed with unused motor oil), which was slurried with coal and water. According to Texaco, the effluent streams from gasifying this feed were nonhazardous.

Waste gasification is an innovative extension of Texaco's conventional fuels gasification technology that reacts carbonaceous materials with a limited amount of oxygen (partial oxidation) at high temperatures. Hazardous waste gasification, using the TGP, offers an environmentally attractive alternative to other thermal and stabilization technologies. The TGP destroys any hydrocarbons in the feed and effectively recycles the waste by transforming it into clean gas for use as fuel for power generation or an intermediate product for the manufacture of transportation fuels, fertilizers, or chemicals. The residual mineral matter solidifies into small pieces of glassy slag. Texaco reports that extensive testing has shown the aqueous effluent streams to be free of priority pollutants and

acceptable for discharge after pretreatment by conventional wastewater technology. None of the effluent streams contained measurable concentrations of dioxins or furans.

Given its ability to deal with a variety of feedstocks, destroy organic compounds, produce a useful synthesis gas, and solidify inorganic compounds into potentially inert glassy slag, TGP offers an effective treatment alternative for hazardous wastes.

1.2 BRIEF DESCRIPTION OF PROGRAM AND REPORTS

The SITE Program is a formal program established by EPA's Office of Solid Waste and Emergency Response (OSWER) and Office of Research and Development (ORD) in response to the Superfund Amendments and Reauthorization Act of 1986 (SARA). The SITE Program's primary purpose is to maximize the use of alternative remedies in cleaning hazardous waste sites by encouraging the development and demonstration of new, innovative treatment and monitoring technologies. The SITE Program consists of four major elements discussed below.

The Demonstration Program develops reliable performance and cost data on innovative technologies so that potential users may assess the technology's site-specific applicability. The selected technologies are either currently available or close to being available for remediation of Superfund sites. SITE Demonstrations are conducted on hazardous waste sites under conditions that closely simulate full-scale remediation conditions, thus assuring the usefulness and reliability of information collected. The data collected are used to assess the performance of the technology, the potential need for pre- and post-treatment processing of wastes, possible operating problems, and the approximate costs. The Demonstrations also allow for evaluation of long-term risks, operating costs, and maintenance.

The Emerging Technology Program focuses on successfully proven, bench-scale technologies which are in an early stage of development involving pilot or laboratory testing. It encourages successful technologies to advance to the Demonstration Program.

The Monitoring and Measurement Technologies Program identifies existing technologies which improve field monitoring and site characterizations. New technologies that provide faster, more cost-effective contamination and site assessment data are supported by this program. The Monitoring and

Measurement Technology Program also formulates the protocols and standard operating procedures for demonstrating methods and equipment.

The Technology Transfer Program disseminates technical information on innovative technologies in the Demonstration, Emerging Technology, and Monitoring and Measurements Technology Programs through various activities. These activities increase the awareness and promote the use of innovative technologies for assessment and remediation at Superfund sites. The goal of technology transfer activities is to develop interactive communication among individuals requiring up-to-date technical information.

Technologies are selected for the SITE Demonstration Program through annual requests for proposals. ORD staff review the proposals to determine which technologies show the most promise for use at Superfund sites. Technologies must be at the pilot- or full-scale stage. Mobile technologies and innovative technologies that incorporate unique design features and may offer advantages over conventional existing processes for the remediation of hazardous waste matrices are of particular interest.

Once EPA has accepted a proposal, a cooperative agreement between EPA and the developer establishes responsibilities for conducting the demonstrations and evaluating the technology. The developer is responsible for demonstrating the technology at the selected site and is expected to pay any costs for transport, operations, and removal of the equipment. EPA is responsible for project planning, sampling and analysis, quality assurance and quality control, preparing reports, disseminating information, and transporting and disposing of treated waste materials.

The results of the TGP demonstration are published in two (basic) documents: the SITE Technology Capsule and the Innovative Technology Evaluation Report (ITER). The SITE Technology Capsule provides relevant summary information on the technology and key results of the SITE Demonstration. The ITER content is defined in Section 1.3 and presented in the succeeding sections. It provides detailed discussions of the technology and the results of the SITE Demonstration. Both publications are intended for use by remedial managers evaluating the technology for a specific site and waste.

An additional document, the Technology Evaluation Report (TER) contains all of the records and data acquired during the predemonstration, demonstration, and post-demonstration phases of the test

program. It is available, on request, from the EPA SITE Project Manager listed in Section 1.5-Key Contacts.

1.3 PURPOSE OF THE INNOVATIVE TECHNOLOGY EVALUATION REPORT (ITER)

The ITER provides definitive information on the technology, SITE Demonstration and its results, and conclusions and discussions about the applicability and effectiveness of the technology to remediate hazardous waste sites based on the Demonstration results. The ITER is intended for use by EPA remedial project managers, EPA on-scene coordinators, contractors, and other decisionmakers who implement specific remedial actions. The ITER is designed to aid them in further evaluating the specific technology as an applicable option in a particular cleanup operation.

This report represents a critical step in the development and commercialization of a treatment technology. To encourage the general use of demonstrated technologies, EPA provides information regarding the applicability of each technology to specific sites and wastes. The ITER also includes information on cost and site-specific characteristics. It discusses advantages, disadvantages, and limitations of the technology.

Each SITE Demonstration evaluates the performance of a technology in treating a specific waste. The characteristics of wastes at or from other sites may differ from the characteristics of the treated waste. Therefore, a successful field demonstration of a technology on a specific site waste or at a specific site does not necessarily ensure that it will be applicable at other sites or to other waste matrices. Data from the field demonstration may require extrapolation for estimating the operating ranges in which the technology will perform satisfactorily.

1.4 TECHNOLOGY DESCRIPTION

1.4.1 Process Units

Texaco maintains three pilot-scale gasification units with ancillary units and miscellaneous equipment at the Montebello Research Laboratory (MRL), where the SITE Demonstration was conducted. Each gasification unit at MRL can handle a nominal throughput of 25 tpd of coal. The High Pressure Solids Gasification Units I and II (HPSGU I and II) and the Low Pressure Solid Gasification Unit (LPSGU) are rated for operation at pressures up to 1,200 psig and 400 psig, respectively. HPSGU I and

II use a direct quench mode for cooling the gas, while the LPSGU adds the option of cooling the gas by indirect heat exchange with water. Only one of the three units operates at a given time.

This SITE Demonstration evaluated the operation of the HPSGU II in conjunction with other systems for the storage and grinding of solid fuels, generation and storage of slurries, acid gas removal, sulfur removal, and on-site wastewater treatment. Figure 1-1 is a block flow diagram, which identifies the major subsystems.

1.4.2 Solids Grinding and Slurry Preparation Unit

The feed was prepared in the Solids Grinding and Slurry Preparation Unit in a two-step process:

- Dry solids were crushed in a hammer mill.
- The crushed solids were ground and mixed with the waste and water in a wet rod mill.

Figure 1-2 is the process flow diagram for the Solids Grinding and Slurry Preparation Unit.

1.4.2.1 Crushing--

Coal arrived at the plant in bottom-dumping trucks that loaded it directly into a truck dump hopper, or piled it on-site for storage. (Skip loaders transferred stored coal to the truck dump hopper.) From the truck dump hopper, the coal traveled on a feed belt to a bucket elevator, which delivered it either to the coal silo or to the smaller, bypass hopper. From either device, the coal dropped onto a conveyor belt, passed through a magnetic separator and a metal detector, and entered the hammer mill. A conveyor belt scale controlled the coal feed rate to the hammer mill. The hammer mill crushed the coal to a size appropriate for feeding to the wet rod mill. The crushed coal was conveyed to the mill feed hopper.

1.4.2.2 Waste Feed--

The contaminated soil was dumped from drums into the waste feed hopper and metered into the wet rod mill using a bin feeder and bucket elevator system. The soil addition started after the wet rod mill had been started; it was completed before the wet rod mill shutdown to ensure that all the soil was

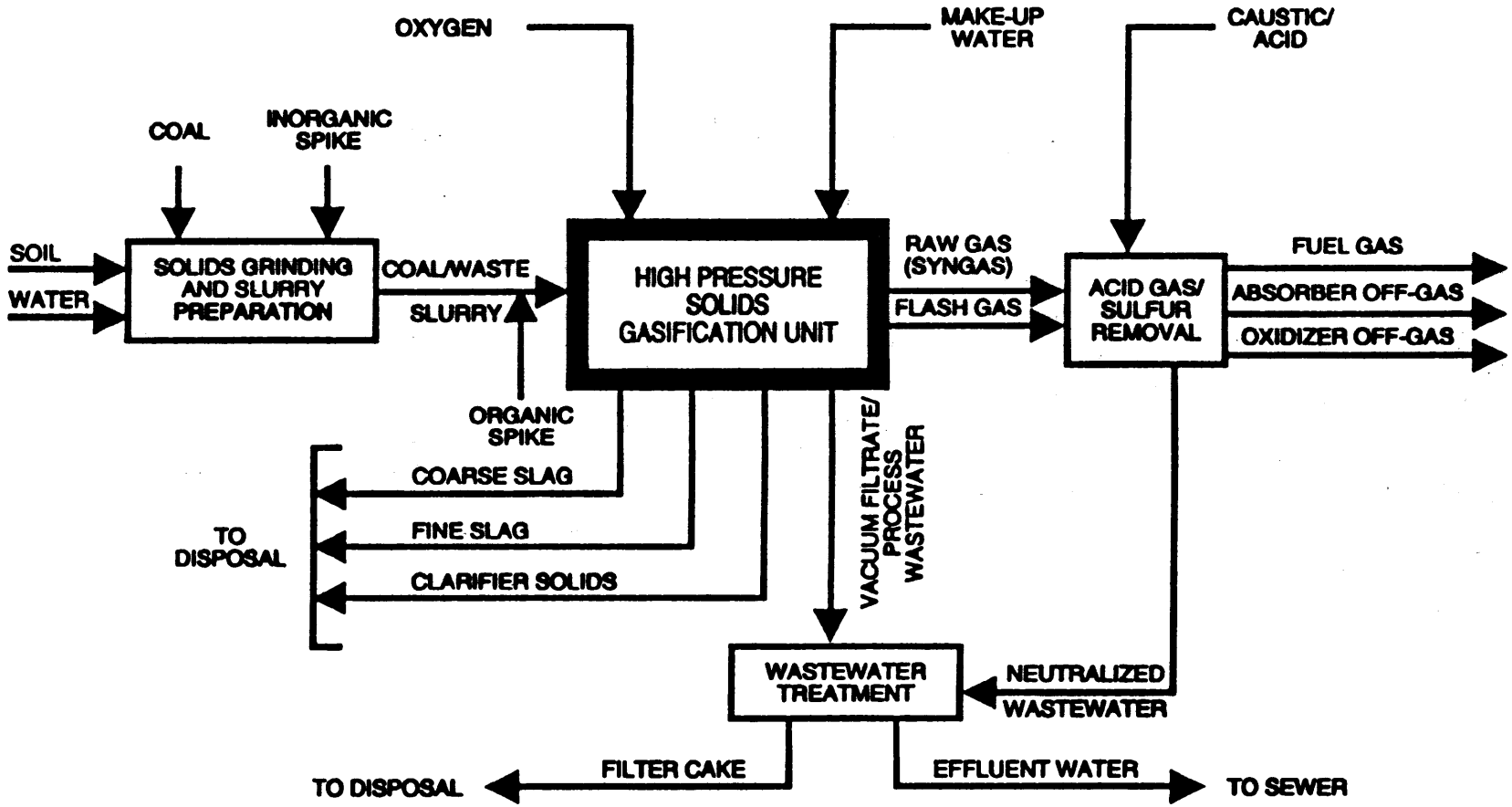

Figure 1-1. Block Flow Diagram of MRL TGP During SITE Demonstration.

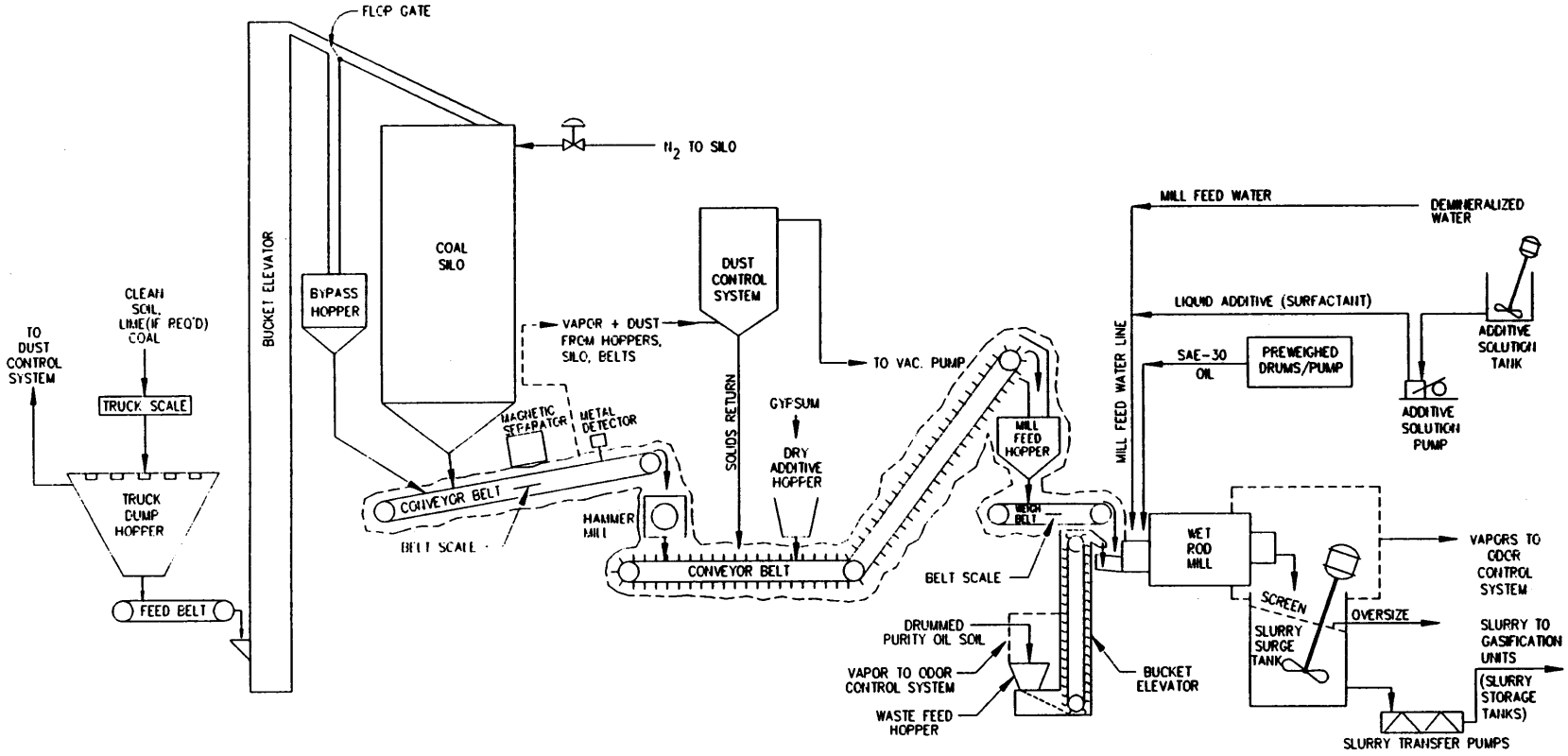

Figure 1-2. Solids Grinding and Slurry Preparation Unit Process Flow Diagram.

transferred to the slurry storage tanks. The slurry in the tanks was analyzed to determine the solids concentration in the slurry.

1.4.2.3 Slurrying--

For the preparation of the Purity Oil soil slurry, the mill feed hopper dropped the coal onto a weigh belt that metered its flow into the wet rod mill where it was simultaneously ground and slurried with water. A belt scale controlled the speed of the weigh belt to achieve the desired feed rate. The mill feed water line mixed water with the coal and the contaminated soil at the entrance to the wet rod mill. The mill discharged the slurry, which passed through a screen, into the slurry surge tank. Pumps moved it to the gasification slurry storage tanks. During grinding, frequent grab samples of the slurry provided a means of determining the solids concentration. An operator then adjusted the mill water feed rate as required. A small quantity of oversized material, screened from the slurry, was collected in a bin for proper disposal or recycled through the solids grinding system.

For the extended SITE Demonstration, additional slurry was required and prepared using clean soil since further supplies of Purity Oil soil were not readily available. For the preparation of the clean soil slurry, coal and clean soil were weighed, using a front-end loader and a truck scale. The truck dump hopper was filled with alternating loads of coal and soil at the predetermined ratio. Any lime required to control slag viscosity was preweighed and added to the hopper with the soil.

SAE 30 oil from preweighed drums was added at the wet rod mill inlet using a pneumatic pump. The oil was added to match the heating value of the Purity Oil soil in the Purity Oil soil slurry and to provide a similar level of hydrocarbon contamination in the clean soil slurry. Had any operating problems with the oil transfer pump occurred, the oil in the drums could have been added directly to the slurry in the slurry storage tank.

1.4.2.4 Additives--

Gypsum, a dry additive (ash viscosity modifier), entered the process through a dry additive hopper in the same manner as the contaminated soil. A surfactant liquid additive (slurry viscosity modifier), entered the feed in the wet rod mill via the mill feed water line.

1.4.2.5 Particulate and Odor Emissions Control--

The Solids Grinding and Slurry Preparation Unit included a baghouse and dust control system to control particulate emissions. Enclosed coal conveyor belts and coal handling equipment upstream of the weigh belts operated under a slight negative pressure. The baghouse collected particulates and recycled them to the process downstream of the hammer mill. The gas discharge from the baghouse passed through a carbon canister for organics removal. In addition, a nitrogen blanket on the coal silo prevented the creation of an explosive atmosphere. The wet rod mill and slurry storage tank were enclosed and the vent line from them was also routed to a carbon canister for organics removal.

1.4.3 High Pressure Solids Gasification Unit

The HPSGU II can handle a nominal throughput of 25 tpd of coal. The gasifier was designed to operate at pressures up to 1,200 psig and internal temperatures up to 2,800°F. This unit is a direct quench gasifier where the hot syngas and molten slag are cooled by direct contact with water. Figure 1-3 shows the process flow diagram for the HPSGU II.

1.4.3.1 Slurry Feed System--

For the preparation of the SITE Demonstration slurry, the clean soil slurry was blended with a portion of the Purity Oil soil slurry to produce the mixed test slurry for the SITE Demonstration runs. The blending was accomplished by filling a slurry storage tank to the appropriate level with one of the slurries and then adding the required amount of the other slurry to achieve the desired level in the tank. The quantity of each slurry was measured by slurry storage tank level.

The mixed test slurry was pumped to the two gasification slurry storage tanks and the single slurry run tank located adjacent to the HPSGU II. The tank group held sufficient capacity for a 3 to 4-day gasification test. Slurry from any of the MRL storage tanks could be fed to the gasifier run tank.

The slurry storage and run tanks, equipped with paddle mixers and slurry circulation/transfer pumps, kept the slurry in constant motion and maintained homogeneity. Agitation was enhanced by sparging the tanks with nitrogen. All of the tanks were equipped with vibrating screens to separate oversized material from the slurry.

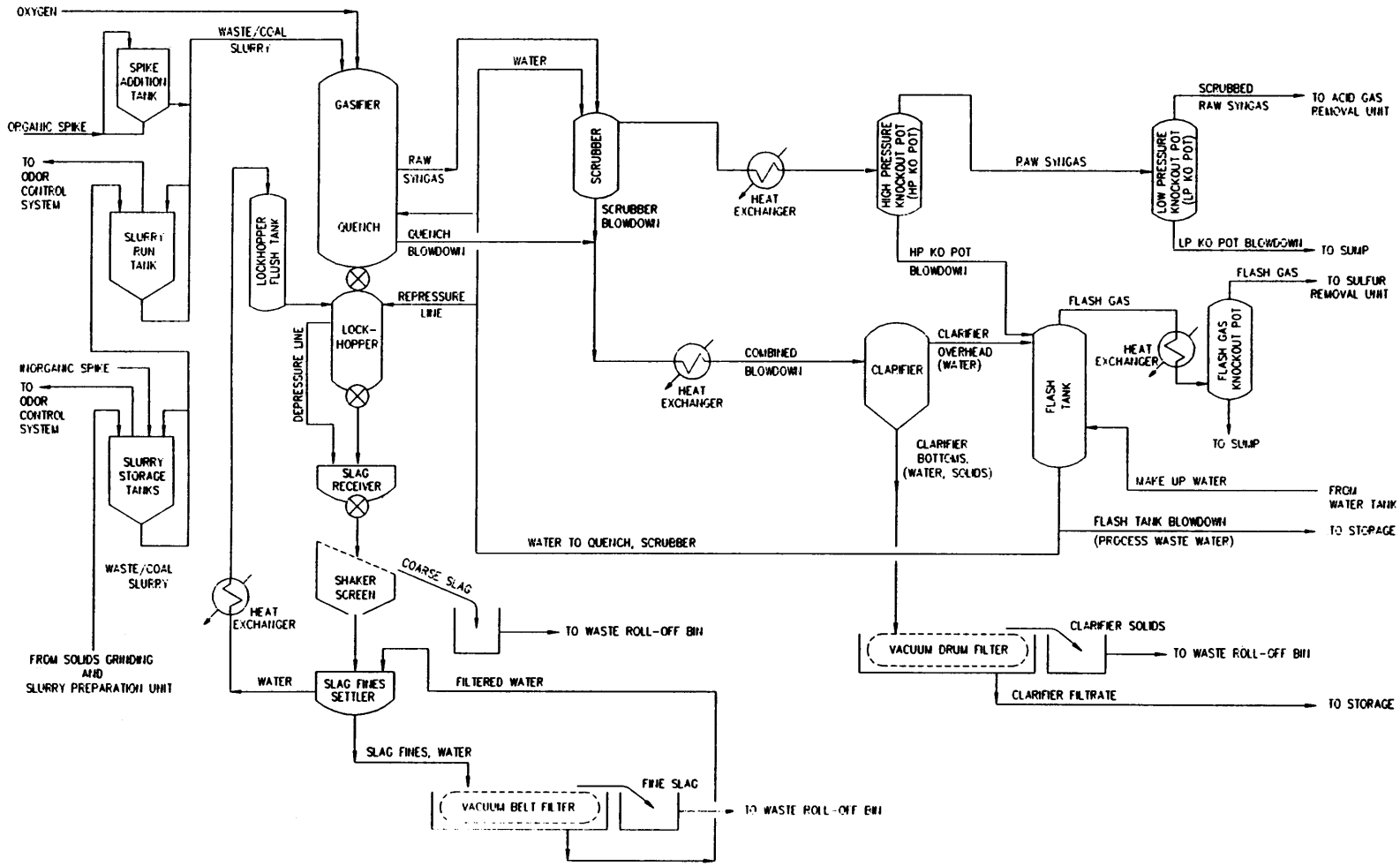

Figure 1-3. High Pressure Solids Gasification Unit II Process Flow Diagram.

Conventional charge pumps fed the slurry from the slurry run tank to the gasifier. The slurry flow rate was varied by adjusting the charge pump speed; it was monitored by several flow meters. The slurry run tank was mounted on a scale, allowing an additional check (by weight) on the slurry charge rate.

For the TGP SITE Demonstration, a metering pump injected the chlorobenzene organic liquid spike into the slurry flow at the gasifier inlet. The barium nitrate and lead nitrate inorganic metal salts had been weighed and directly added to the slurry in each of the slurry storage tanks.

High purity oxygen supplied the oxidant feed to the gasifier. Stored on site as a liquid, the oxygen was vaporized and heated under high pressure before being charged to the gasifier. The oxygen flow to the gasifier was measured and controlled.

1.4.3.2 Gasification--

The HPSGU II is a two-compartment vessel, consisting of an upper refractory-lined, reaction chamber and a lower quench chamber. Oxygen and slurry feeds were charged through an injector nozzle into the reaction chamber where they reacted under highly reducing conditions to produce raw syngas and molten ash. The following chemical conversion formula describes the continuous, entrained-flow, pressurized, non-catalytic, partial-oxidation TGP process, in which the carbonaceous materials react with oxygen or air:

$$C_nH_m + n/2\ O_2 \text{ ------> } nCO + m/2\ H_2$$

The gasifier temperature was measured and controlled to maintain an operating temperature sufficient to convert the soil and coal ash into molten slag by adjusting the oxygen-to-slurry feed rate ratio. The raw syngas consisted primarily of carbon monoxide and hydrogen, with lesser quantities of carbon dioxide and traces of methane. Chlorinated species in the feed became hydrogen chloride in the raw syngas. Any sulfur in the feed was converted into hydrogen sulfide and carbonyl sulfide, and any unreacted fuel was converted to char. The average pressure was 500 psig. The pressure was controlled by a control valve downstream of the gas coolers.

From the reaction chamber, the raw syngas and molten ash flowed into the quench chamber, where the water cooled and partially scrubbed the raw syngas. It also converted the molten ash into

small pieces of glassy slag, which then passed down into the lockhopper. The quench water was then cooled and directed to the clarifier to remove solids.

1.4.3.3 Gas Scrubbing and Cooling--

The raw syngas leaving the quench chamber contacted additional water in the raw gas scrubber, which further reduced the hydrogen chloride and particulate content in the syngas. The scrubber water combined with the quench water and was cooled before flowing to the clarifier. The scrubbed raw syngas was further cooled in a heat exchanger separating the entrained liquid water condensate from the gas in the high pressure knockout pot. The pressure of the scrubbed raw syngas was lowered and any additional entrained water separated from the gas in the low pressure knockout pot was routed to the HPSGU II sump. After the gas exited this second knockout pot, the flow was measured and samples were taken. The gas was then fed to the Acid Gas Removal Unit for cleanup before flaring.

1.4.3.4 Solids Recovery and Water Handling--

Due to the nature of the solids residuals/gas quenching and scrubbing methods, two separate solids/water handling systems were necessary. The lockhopper system handled the coarse and fine slag solids. The quench/scrubber system both cooled and scrubbed the raw syngas, and then recovered entrained particulate.

Lockhopper System--The lockhopper system used a cyclic mode of operation to remove coarse and fine slag solids from the gasification unit. During the collection cycle, the lockhopper was open to the gasifier at gasifier pressure. The slag from the quench chamber fell through the top valve and accumulated in the lockhopper.

In the discharge cycle, the top lockhopper valve closed, and the lockhopper was depressured to atmospheric pressure. The bottom lockhopper and lockhopper flush tank discharge valves opened, allowing water from the flush tank to move the contents of the lockhopper into the slag receiver below. As the flush tank level fell, the bottom lockhopper valve closed, keeping the lockhopper full of water. The lockhopper returned to gasifier pressure using a dedicated pressurizing pump system. The top lockhopper valve then opened, resuming the collection cycle.

The slag and water from the lockhopper blowdown were delivered from the slag receiver to the shaker screen by a rotary valve. The shaker screen separates the slag into coarse slag and fine slag fractions. The coarse slag fell off the screen into a bin hopper. When the bin hopper was full an operator replaced it and weighed/sampled the coarse slag.

The fine slag passed with the flush water down through the shaker screen into the slag fines settler. The fine slag was drawn from the bottom of the settler and pumped to the vacuum belt filter. The resulting fine slag cake fell into a separate bin hopper. When this bin hopper was full an operator replaced it and weighed/sampled the fine slag.

The filtrate from the vacuum belt filter returned to the weir of the slag fines settler where it mixed with the overflow of the slag fines settler. This liquid, pumped through a cooler back to the lockhopper flush tank, recycled in the next lockhopper cycle.

Quench/Scrubber System--The system continually routed the water in the quench chamber and scrubber vessel to the clarifier via coolers. The clarifier produces an underflow stream of solids and water, called clarifier bottoms, and an overflow stream of clarified water, known as the clarifier overhead.

Periodically the clarifier bottoms were drawn off and filtered to produce a filter cake (clarifier solids—approximately 45 wt% solids), and a filtrate stream (vacuum filtrate). Operators sampled the clarifier bottoms both before and after filtering. The bottoms were also weighed after filtering.

The clarifier overhead flowed into the flash tank where it mixed with the blowdown stream from the high pressure knockout pot. In the flash tank dissolved gases were removed from these waters at low pressure. The water then recycled back to the quench chamber and scrubber vessel or was routed to temporary storage or wastewater treatment as a blowdown stream. The flash gas was cooled and routed to the flash gas knockout pot before going to the Sulfur Removal Unit for removal of sulfides. Any water that accumulated in this knockout pot was routed to the HPSGU II sump. When required, water was added to the quench/scrubber system at the flash tank. Makeup water was drawn from an on-site well and softened.

1.4.4 Acid Gas Removal Unit

The Acid Gas Removal Unit, shown in Figure 1-4, removed hydrogen sulfide, carbon dioxide, and small amounts of hydrogen chloride and chlorine (acid gases) from the scrubbed raw syngas. The solvent used in this absorption operation was Selexol®, a polyethylene glycol dimethyl ether solution supplied by Sherex Chemical Company under license from Union Carbide.

Scrubbed raw syngas from the gasification unit flowed to the raw syngas knockout pot for removal of small amounts of entrained process water, which were routed to the sump. The scrubbed raw syngas then entered the bottom of the Selexol® absorber tower and rose up the tower against a counter-current flow of stripped solvent called lean Selexol® or lean solvent. The Selexol® absorber tower operated at conditions that removed approximately 80-95 percent of the hydrogen sulfide as well as the remaining hydrogen chloride and chlorine in the raw syngas.

This treated raw syngas, called fuel gas, flowed from the top of the Selexol® absorber into an absorber knockout pot where small amounts of entrained solvent were removed and routed to the sump. The dry fuel gas was then sampled, metered, and flared.

A solvent stream, called rich Selexol® or rich solvent because it is concentrated with acid gas consisting mainly of hydrogen sulfide and carbon dioxide, flowed from the bottom of the Selexol® absorber to the solvent-solvent exchanger where it was heated by hot lean solvent. The rich solvent was further heated in a steam heat exchanger before entering the top of the Selexol® stripper. The rich solvent flowed down the tower, contacting steam, which stripped out the acid gases.

The acid gases and steam flowed from the top of the tower through a cooler to the reflux pot. Water condensed out in this pot and was pumped back to the rich solvent line upstream of the solvent-solvent exchanger. The overhead acid gas stream from the reflux pot, consisting mainly of hydrogen sulfide and carbon dioxide and known as sour gas, flowed to the Sulfur Removal Unit.

Lean solvent exited the bottom of the stripper. There, a portion was drawn off, heated in external reboilers, and fed to the separator, where lean solvent separated from the steam. The steam was fed to the middle section of the stripper, while the lean solvent from the separator was combined with the balance of the lean solvent from the bottom of the stripper. The composite lean stream was cooled first

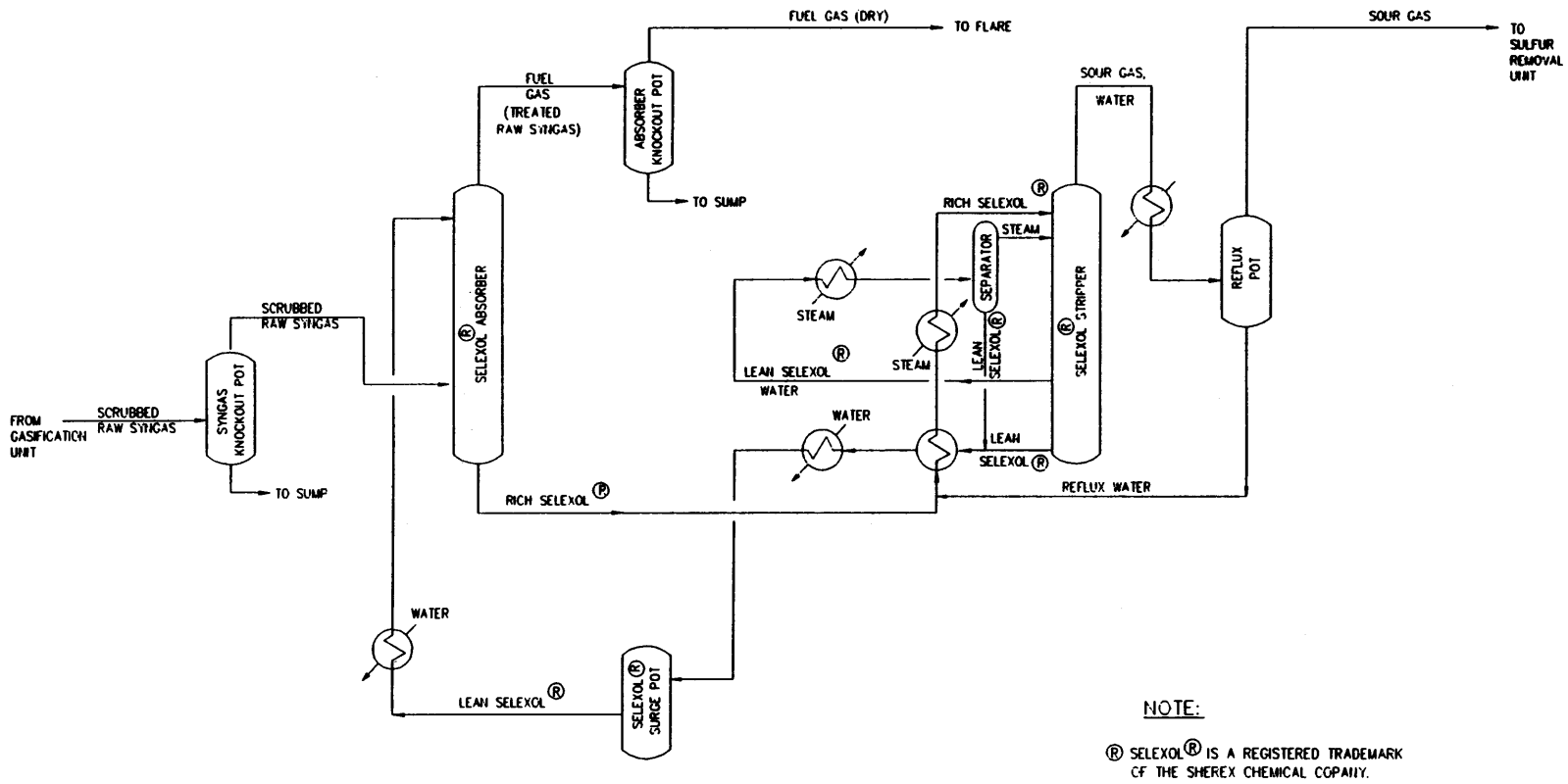

Figure 1-4. Acid Gas Removal Unit Process Flow Diagram.

in the solvent-solvent exchanger, then sent through a cooler and directed into the Selexol® surge pot where a level of lean solvent is maintained to ensure a constant flow to the absorber. A pump moved the composite lean solvent from the Selexol® surge pot, through additional coolers to the top of the absorber tower.

1.4.5 Sulfur Removal Unit

The Sulfur Removal Unit, shown in Figure 1-5, separated hydrogen sulfide from the sour gas stream from the Acid Gas Removal Unit and the flash gas stream from the gasification section. It converted hydrogen sulfide to a sodium thiosulfate solution, which was treated in the MRL Wastewater Treatment Unit (WWTU).

The combined flow of sour gas from the Acid Gas Removal Unit and the flash gas from the HPSGU II entered the bottom of the caustic absorber. In the absorber, the composite gas stream contacted a counter-current aqueous solution of sodium hydroxide (caustic), which reacted with the gaseous hydrogen sulfide to produce sodium sulfide. Carbon dioxide in the sour gas stream also reacted with the caustic to produce sodium bicarbonate. The caustic absorber achieved 85 to 95 percent removal of the hydrogen sulfide in the sour gas. The residual gas, known as caustic absorber off-gas, traveled to an absorber knockout pot before flaring as absorber off-gas. Any entrained caustic was routed to the unit sump.

Pumps sent the spent caustic from the bottom of the caustic absorber through a meter to the oxidizer tower. A portion of the spent caustic stream recycled to the top of the caustic absorber through a meter in the spent caustic recycle line. Mixed with fresh caustic, it cooled in an exchanger, and then (mixed with water) reentered the absorber.

A heated storage tank, aboveground in a bermed area, stored fresh caustic as a 50 weight-percent aqueous solution of sodium hydroxide.

At the oxidizer tower, the spent caustic stream was mixed with compressed air and steam, and fed to the bottom of the oxidizer tower. The caustic, air, and steam reacted with the sodium sulfide to produce sodium thiosulfate.

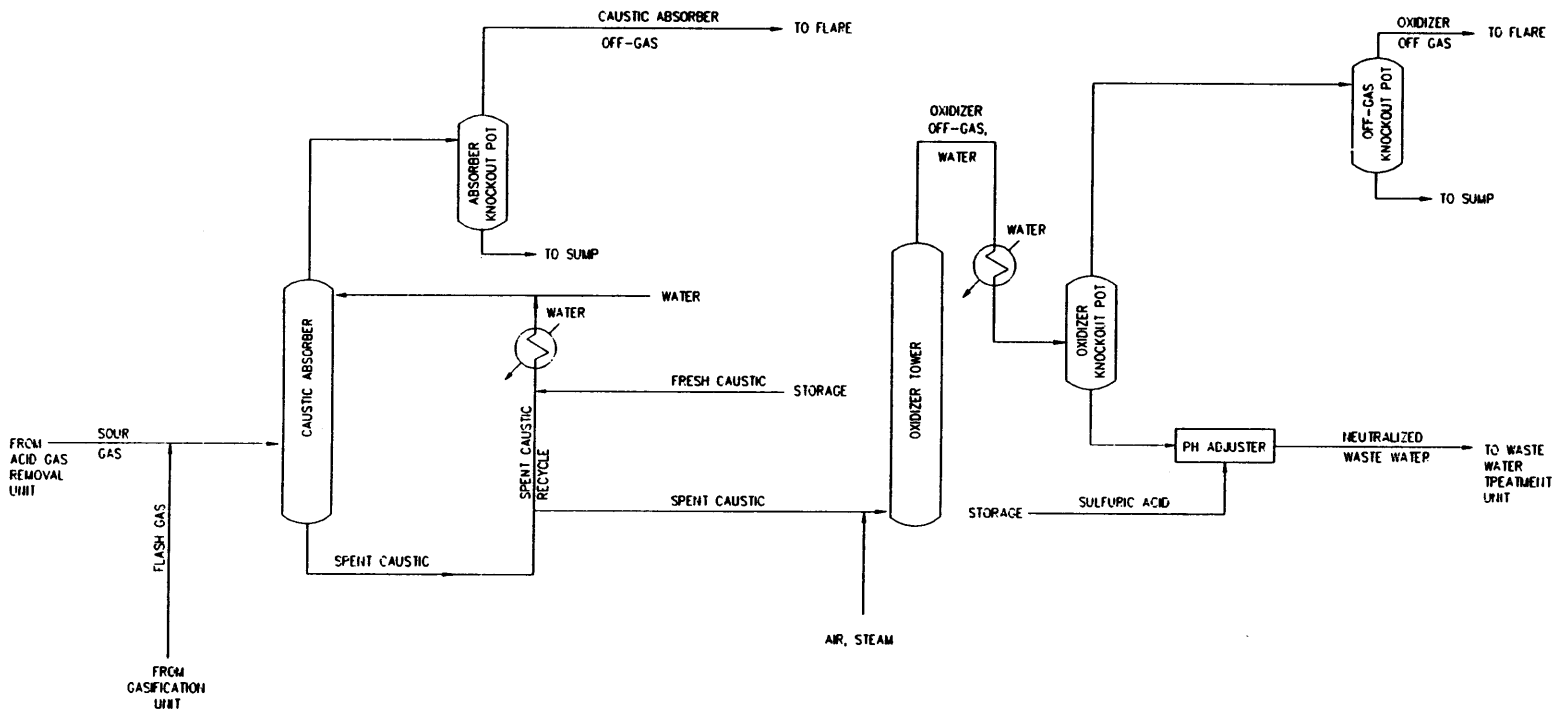

Figure 1-5. Sulfur Removal Unit Process Flow Diagram.

The oxidizer tower operated in an overflow mode. The vapor and liquid phases flowed out of the top of the tower and passed through a cooler before entering the oxidizer knockout pot. The overhead gas from the oxidizer knockout pot, called oxidizer off-gas, flowed to the off-gas knockout pot before being flared. Any residual entrained solution was routed to the unit sump.

The liquid phase separated in the oxidizer knockout pot was an aqueous mixture of sodium thiosulfate and sodium hydroxide. In a neutralization line, the pH was adjusted to approximately 7 by the automated addition of sulfuric acid. The neutralized stream then discharged to the WWTU.

An aboveground tank located in an adjacent bermed area stored sulfuric acid as 93 weight-percent aqueous solution. The pH of the wastewater stream was continuously monitored downstream of the mixing point by an instrument which directly controlled the amount of acid being pumped into the line.

1.4.6 Other Ancillary Units and Miscellaneous Equipment

1.4.6.1 Flare--

MRL employs a flare system to combust the fuel gas from the Acid Gas Removal Unit and the off-gases from the Sulfur Removal Unit. Hydrogen and carbon monoxide were the primary combustible components in the off-gases. The oxidizing environment at the flare provided a fuel-lean stoichiometry and complete combustion of the raw syngas, producing primarily carbon dioxide and water. Continuous monitoring of the flare flame temperature verified proper operation. If the flame had been extinguished, the flare would automatically have attempted to reignite and sound an alarm.

1.4.6.2 Wastewater Treatment Unit--

MRL maintains an on-site Wastewater Treatment Unit (WWTU) for processing plant wastewater before discharging it to a municipal sewer.

The WWTU treats wastewater from the following sources:

- Sulfur Removal Unit neutralization line
- Stormwater drains in process areas
- Laboratory sinks

- Solids Grinding and Slurry Preparation Unit sump
- Ancillary process unit sumps
- Boilers
- Water softeners

The WWTU employs neutralization, flocculation, clarification, and filtration to meet the effluent discharge specifications required by the Los Angeles County Sanitation Districts.

1.4.7 Waste Disposal

Solid wastes and wastewaters generated during the operation and decontamination of process equipment were tested for hazardous characteristics. Hazardous wastes were transported off-site for proper disposal. These wastes included:

- Slag and clarifier solids
- Process wastewater streams
- Washdown water
- Unused feed and other test-defined feed materials (hazardous waste, hazardous slurries, and miscellaneous spiking chemicals and additives)
- Rinse water generated during decontamination
- Used disposable personal protection and decontamination materials.

1.4.7.1 Solids--

Slag and clarifier solids, generated from the gasification process, consisted primarily of the inorganic/mineral matter present in the coal and hazardous waste feed. These solids were stored in lined, certified, steel roll-off bins leased from a licensed hazardous waste transporter. Each roll-off bin was covered with a water-proof canvas tarpaulin. Samples of each stream sent to the roll-off bins were retained and analyzed; waste logs were maintained on all roll-off bin contents. The waste solids were transported via a licensed hauler to a permitted treatment, storage, and disposal facility in compliance with all federal and state regulations.

1.4.7.2 Process Wastewater and Washdown Water--

During gasification tests, two process wastewater streams, the flash tank blowdown and the clarifier underflow vacuum filtrate, are discharged from the HPSGU II to the WWTU. At the end of a gasification run, the quench/scrubber system and the lockhopper system water inventories are also normally discharged to the WWTU. Because this SITE Demonstration used California hazardous waste as gasifier feed material, these four water streams diverted to temporary storage, sampled, and, if hazardous properly disposed of off-site.

A fifth process wastewater stream was generated by the Sulfur Removal Unit during gasification operations. This stream contained sodium sulfate and sodium thiosulfate. This stream did not exhibit hazardous characteristics as a result of gasifying a hazardous waste and was diverted to storage, followed by off-site treatment and disposal.

Water generated from washing down the process plot area is normally discharged to the WWTU via a sump system. Because a hazardous waste was used as a gasification feedstock, this water was not allowed to flow to the WWTU. Instead, it was stored and removed by vacuum truck for off-site treatment and disposal.

1.4.7.3 Unused Hazardous Waste Feed, Hazardous Waste Feed/Coal Slurry and Coal--

All unused feed materials were gasified after the SITE Demonstration tests were completed. The hazardous waste residuals were transferred to an off-site hazardous waste disposal facility. The coal that was not consumed was stored on-site for future use.

1.4.7.4 Decontamination Rinse Water--

Decontamination rinse water generated during gasification operation was discharged to the sumps that serve the unit being decontaminated. This water was isolated from the WWTU and transported by a certified waste transporter via vacuum truck to a permitted off-site treatment facility.

1.4.7.5 Contaminated Oil--

Oils for machinery lubrication were stocked in barrel racks located inside the tank retaining wall. When in use, these barrels were fixed in such a position that normal spills drained into an oil/water sump for pumping into a waste oil tank. Waste oil removed from machinery was stored in 55-gallon drums prior to transport to a permitted disposal facility. Small oil spills elsewhere in the MRL facility were treated with an oil absorbing material, which was sent for disposal as hazardous waste.

1.4.7.6 Used Health, Safety, and Decontamination Material(s)--

Used personal protection materials (Tyvek® suits, gloves, towel wipes, etc.) were collected in a dumpster and transported as hazardous waste by a certified service to a permitted off-site treatment facility.

1.5 KEY CONTACTS

Additional information on the SITE Program, the TGP SITE Demonstration, and TGP technology are available from the following sources:

The SITE Program

Robert A. Olexsey
Director, Superfund Technology Demonstration Division
U.S. Environmental Protection Agency
26 West Martin Luther King Drive
Cincinnati, OH 45268
513-569-7861
Fax 513-569-7620

Marta K. Richards
EPA SITE Project Manager
U.S. Environmental Protection Agency
26 West Martin Luther King Drive
Cincinnati, OH 45268
513-569-7692
Fax 513-569-7549

The Texaco Gasification Process Technology

Richard B. Zang
Texaco Inc.
2000 Westchester Avenue
White Plains, NY 10650
914-253-4047
Fax 914-253-7744

On-Line Clearinghouses

- The Alternative Treatment Technology Information Center (ATTIC) System (operator 301-670-6294) is a comprehensive, automated information retrieval system that integrates data on hazardous waste treatment technologies into a centralized, searchable source. This database provides summarized information on innovative treatment technologies.

- The Vendor Information System for Innovative Treatment Technologies (VISITT) (Hotline: 800-245-4505) database contains information on 154 technologies offered by 97 developers.

- The OSWER CLU-In electronic bulletin board contains information on the status of SITE technology demonstrations. The system operator can be reached at 301-585-8368.

Publications

Technical reports may be obtained by contacting the Center for Environmental Research Information (CERI), 26 West Martin Luther King Drive, Cincinnati, OH 45268 at 513-569-7562.

SECTION 2
TECHNOLOGY APPLICATIONS ANALYSIS

This section of the report addresses the general applicability of the Texaco Gasification Process (TGP) for the treatment of hazardous wastes contaminated with organics and heavy metals. The conclusions are based primarily on the TGP SITE Demonstration results supplemented by information on other applications of the technology, presented in Appendix II.

2.1 OBJECTIVES - PERFORMANCE VERSUS ARARs

Specific environmental regulations pertain to the operation of the TGP, including the transport, treatment, storage, and disposal of wastes and treatment residuals. These regulations may affect the future development of commercial TGP units.

For the TGP SITE Demonstration, the primary waste feed materials were transported from the Purity Oil Sales Superfund Site in Fresno, California to the TGP's location at Texaco's MRL in South El Monte, California. Such waste treatment, if conducted on a hazardous waste, would be considered off-site treatment. All substantive and administrative regulatory requirements for waste transport, storage, treatment, and disposal at the federal, state, and local level must be fulfilled.

The operation of MRL is regulated by environmental permits covering air quality, water quality, and the storage and treatment of hazardous wastes. Air quality permits have been issued by the regional South Coast Air Quality Management District (SCAQMD), with individual permits covering all pertinent operations facilities at the MRL. The MRL does not have a National Pollutant Discharge Elimination System (NPDES) permit for direct wastewater discharge. Instead, wastewater is pretreated by an on-site wastewater treatment plant and then discharged to a municipal sewer. This discharge is permitted by the Los Angeles County Sanitation Districts and is routed to their treatment facilities. The MRL is classified as a hazardous waste generator. Hazardous waste residuals are sent to certified treatment, storage, and disposal facilities in compliance with U.S. EPA and California EPA regulations.

Permits held by MRL allow routine research and development as well as support activities. New research programs require the modification of existing permits and the addition of new permits. Depending on the length of the research programs, these modifications and new permits can be temporary. Such permits terminate at the end of the short-term research.

For this specific SITE Demonstration, the waste soil excavated from the Purity Oil Sales Superfund Site was prescreened, pH modified, analyzed, and predetermined not to be a Resource, Conservation, and Recovery Act (RCRA) hazardous waste. It was then sealed in drums and transported to Texaco's MRL. Based on these conditions, the State of California Environmental Protection Agency (CAL-EPA) Department of Toxic Substances Control issued a variance to MRL from the hazardous waste facility permit under generator and transporter regulatory requirements of Division 4.5, Title 22, California Code of Regulations (CCR). The waste soil was still considered a California hazardous waste and all operations were properly conducted under these regulations.

When a proposed transportable TGP system is constructed for on-site treatment at Superfund sites, the substantive requirements discussed in this Section would be considered applicable or relevant and appropriate requirements (ARARs). However, the administrative requirements (obtaining the actual permits), would not have to be fulfilled.

Potential TGP technology users should understand and satisfy the requirements of all applicable local, state, and federal regulations. Specific ARARs include the following: (1) the Comprehensive Environmental Response, Compensation, and Liability Act (CERCLA); (2) the Resource Conservation and Recovery Act (RCRA); (3) the Clean Air Act (CAA); (4) the Safe Drinking Water Act (SDWA); (5) the Clean Water Act (CWA); (6) the Toxic Substances Control Act (TSCA); and (7) the Occupational Safety and Health Administration (OSHA) regulations. In addition to these seven general ARARs, discussed below, specific ARARs must be identified by remedial managers for each site. Specific federal and state ARARs which may be applicable to the TGP technology are addressed in Table 2-1.

2.1.1 Comprehensive Environmental Response, Compensation, and Liability Act

The Comprehensive Environmental Response, Compensation, and Liability Act (CERCLA) of 1980 as amended by the Superfund Amendments and Reauthorization Act (SARA) of 1986 provides for federal funding to respond to releases of hazardous substances to air, water, and land. Section 121 of SARA, entitled "Cleanup Standards", states a strong statutory preference for remedies that are

Table 2-1. Federal and State ARARs for the Texaco Gasification Process Technology

Process activity	ARAR	Description	Basis	Response
Waste feed characterization (untreated waste)	RCRA 40 CFR Part 261 or state equivalent	Identify and characterize the waste as treated.	A RCRA requirement must be met prior to managing and handling the waste.	Chemical and physical analyses must be performed.
	TSCA 40 CFR Part 761 or state equivalent	Apply standards to the treatment and disposal of wastes containing PCBs.	During waste characterization, PCBs may be identified in contaminated soils, and soils would then be subject to TSCA regulations.	Chemical and physical analyses must be performed. If PCBs are identified, soils will be managed according to TSCA regulations.
Soil excavation	Clean Air Act 40 CFR 50.6, and 40 CFR 52 Subpart K or state equivalent	Manage toxic pollutants and particulate matter in the air.	Fugitive air emissions may occur during excavation, material handling, and transport.	If necessary, the waste material should be watered down or covered to eliminate or minimize dust generation.
	RCRA 40 CFR Section 262 or state equivalent	Apply standards to generators of hazardous waste.	The soils are excavated for treatment.	If possible, soil should be fed directly into the unit for slurrying.
Storage prior to processing	RCRA 40 CFR Section 264 or state equivalent	Apply standards to the storage of hazardous waste	Excavation may generate a hazardous waste that must be stored in a waste pile.	In a waste pile, the material should be placed on and covered with plastic tied down to minimize fugitive air emissions and volatilization. The time between excavation and treatment should be minimized.
Transportation for on-site processing and off-site disposal	RCRA 40 CFR Part 262 or state equivalent	Mandate manifest requirements, packaging, and labeling prior to transporting.	The waste soil or solids products may need to be manifested and managed as a hazardous waste.	An identification (ID) number must be obtained from EPA.
	RCRA 40 CFR Part 263 or state equivalent	Set transportation standards.	Waste soil or solids products may need permitted transportation as a hazardous waste.	A transporter licensed by EPA must be used to transport the hazardous waste.

Table 2-1. (Continued)

Process activity	ARAR	Description	Basis	Response
Waste processing	RCRA 40 CFR Parts 264 and 265 or state equivalent	Apply standards to the treatment of hazardous waste at permitted and interim status facilities.	Treatment of hazardous waste must be conducted in a manner that meets the RCRA operating and monitoring requirements.	Equipment must be operated and maintained daily. Air emissions must be characterized by continuous emissions monitoring. Equipment must be decontaminated when processing is complete.
	Clean Air Act 40 CFR 50.6, and 40 CFR 52 Subpart K or state equivalent	Manage toxic pollutants and particulate matter in the air.	Fugitive air emissions may occur during solids grinding and slurry preparation.	Unit design includes negative pressure within enclosures, nitrogen blanketing, baghouse collection, and carbon adsorption of vapors.
Storage after processing	RCRA 40 CFR Part 264 or state equivalent	Apply standards to the storage of hazardous waste in containers.	The treated solid products will be placed in covered roll offs or equivalent containers prior to a decision on final disposition.	The treated solids products must be stored in containers that are well maintained; container storage area must be constructed to control rain- water runoff.
Waste product characterization (treated waste)	RCRA 40 CFR Part 261 or state equivalent	Apply standards to waste characteristics.	A requirement of RCRA prior to managing and handling the waste; it must be determined if the solids products is RCRA hazardous waste.	Chemical and physical tests must be performed on treated solids products prior to disposal.
	TSCA 40 CFR Part 761 or state equivalent	Apply standards to the treatment and disposal of wastes containing PCBs.	Treated solids products may still contain PCBs.	Chemical and physical tests must be performed on treated solids products. If PCBs are identified, a proper disposal method must be selected.

Table 2-1. (Continued)

Process activity	ARAR	Description	Basis	Response
Wastewater discharge	Clean Water Act 40 CFR Parts 301, 304, 306, 307, 308, 402, and 403	Apply standards to discharge of wastewater into sewage treatment plant or surface water bodies.	The wastewater may be a hazardous waste.	Determine if wastewater could be directly discharged into a sewage treatment plant or surface water body. If not, the wastewater may need further treatment to meet discharge requirements.
	Safe Drinking Water Act 40 CFR Parts 141 and 143	Apply standards to primary and secondary national drinking water sources	Wastewater may require treatment to drinking water standards.	CERCLA Sections 121(d)(2)(A) and (B) explicitly mention compliance with MCLs, FWQC, and ACLs surface or groundwater standards where human exposure is to be limited.
On-site/off-site disposal	RCRA 40 CFR Part 264 or state equivalent	Apply standards to landfilling hazardous waste.	Treated solids products may still contain contaminants in levels above required cleanup action levels and, therefore, be subject to the LDRs.	Treated solids products must be sent for disposal at a RCRA-permitted hazardous waste facility, or approval must be obtained from EPA to dispose of the wastes on site.
	TSCA 40 Part 761 or state equivalent	Set standards that restrict the placement of PCBs in or on the ground.	Treated solid products containing less than 500 ppm PCBs may be landfilled or incinerated.	If untreated soil contained PCBs, then treated solids products should be analyzed for PCB concentration. Approved PCB landfills or incinerators must be used.
	RCRA 40 CFR Part 268 or state equivalent	Set standards that restrict the placement of certain wastes in or on the ground.	The nature of the waste may be subject to the LDRs.	The waste must be characterized to determine if the LDRs apply; treated wastes must be tested and results compared.

Table 2-1. (Continued)

Process activity	ARAR	Description	Basis	Response
On-site/off-site disposal (cont.)	SARA Section 121(d)(3)	Set requirements for the off-site disposal of wastes from a Superfund site.	The waste is being generated under a response action authorized under SARA.	Wastes must be sent for disposal at a RCRA-permitted hazardous waste facility.

highly reliable and provide long-term protection. It strongly recommends that a remedial action use an on-site treatment that "...permanently and significantly reduces the volume, toxicity, or mobility of hazardous substances." In addition, general factors which must be addressed by CERCLA remedial actions include long-term effectiveness and permanence, short-term effectiveness, implementability, and cost.

The TGP has demonstrated that organic contaminants in the feed stream can be destroyed with at least 99.99 percent DRE. This illustrates both long-term and short-term effectiveness with respect to organic compounds. The process also demonstrated the potential that heavy metals could be immobilized in a non-leaching glassy slag based on TCLP analyses performed on the coarse slag. Similar analyses on the fine slag and the filtered clarifier bottoms, however, provided mixed results on heavy metals immobilization. The long-term effectiveness and permanence of the TGP would have to be evaluated by subsequent analyses that are beyond the scope of work for this project. It is anticipated, however, that the heavy metals immobilized in the non-leaching TGP residuals will remain indefinitely stable. The process wastewater streams contained organics and heavy metals and required additional treatment prior to regulated disposal.

The TGP is a viable and implementable system. Texaco is designing a transportable unit that is better suited for long-term or large-scale on-site treatment. Under such conditions, a fixed supply of coal feed and an economical tie-in to a utility or a chemical synthesis facility for the sale of the fuel gas product could be effected.

Based on the economic analysis in Section 3, the cost of this technology is comparable to alternative thermal destruction technologies. The unique features of the TGP, however, provide some positive economic incentives:

- The TGP is capable of remediating waste materials containing both organics and heavy metals; the TGP effectively destroys organics and immobilizes heavy metals, thus eliminating the need for significant stabilization/solidification treatment of a major portion of the solids byproducts.
- The gas emissions from the TGP are hydrogen-rich and economically valuable. They can be routed to a utility or chemical synthesis plant for further productive use, thus providing a positive cash flow from emissions which otherwise must be released to the atmosphere.

2.1.2 Resource Conservation and Recovery Act

The Resource Conservation and Recovery Act (RCRA) is the primary federal legislation governing hazardous waste activities. Subtitle "C" of RCRA contains requirements for generation, transport, treatment, storage, and disposal of hazardous waste, most of which are also applicable to CERCLA activities.

Depending on the waste feed and the effectiveness of the treatment process, the TGP generates reusable fuel gas, process wastewaters, coarse slag, fine slag, and clarifier solids. Therefore, both liquid and solid residuals must be examined. The process wastewaters may contain organics and heavy metals; they would require additional treatment prior to regulated disposal. The coarse slag analyses conducted for the SITE Demonstration showed a potential for the heavy metals to be immobilized in the non-leaching glassy slag. Similar analyses on the fine slag and clarifier solids, however, provided mixed results on heavy metals immobilization. These solids may still exhibit RCRA hazardous waste characteristics; therefore, they may require further permitted treatment/disposal as hazardous.

For generation of any hazardous waste, the responsible party for the site must obtain an EPA generator identification number and comply with accumulation and storage requirements under 40 CFR 262, or hold a Part B Treatment, Storage, and Disposal (TSD) permit or interim status. Compliance with RCRA TSD requirements is required for CERCLA sites. A hazardous waste manifest must accompany off-site shipment of waste. Transport must comply with RCRA and Department of Transportation (DOT) hazardous waste transportation regulations. The receiving TSD facility must also be permitted in compliance with RCRA standards.

Technology (and/or concentration-based) treatment standards have been established for many hazardous wastes. Those appropriate for the TGP waste streams will be determined by the type of waste generated in each operation. The RCRA land disposal restrictions, 40 CFR 268, mandate that hazardous wastes which do not meet the required treatment standards receive treatment after removal from a contaminated site before land disposal, unless a variance is granted. If either the process wastewaters or solids generated by the TGP constitute hazardous wastes and do not meet the land disposal treatment standards, additional treatment will be required prior to disposal.

2.1.3 Clean Air Act

The Clean Air Act (CAA) establishes primary and secondary ambient air quality standards for protection of public health and emission limitations for certain hazardous air pollutants. Permitting requirements under the Clean Air Act are administered by each state as part of State Implementation Plans, developed to bring each state into compliance with National Ambient Air Quality Standards (NAAQS). Air quality permits covering the operation at MRL were obtained through the SCAQMD. The ambient air quality standards listed for specific pollutants applied to the TGP because of its potential emissions. The TGP produces a synthesis gas primarily composed of hydrogen (H_2), carbon monoxide (CO), and carbon dioxide (CO_2). If the TGP were tied to a utility or chemical synthesis facility, this synthesis gas could then be routed to a gas turbine or synthesis plant, where emissions would then be based on the combustion of the gas (leaving only CO, CO_2, and nitrogen oxide (NO_x) or the resulting emissions from a chemical synthesis process). It is likely, then, that a TGP built in any state would require an air permit. The allowable emissions would be established on a case-by-case basis, depending upon whether or not the site is in attainment of the NAAQS. If the area is in attainment, the allowable emission limits could still be curtailed by the available increments under Prevention of Significant Deterioration (PSD) regulations. This could only be determined on a site-by-site basis.

Fugitive emissions are also subject to the provisions of the CAA. For this SITE Demonstration, soil from the Purity Oil Sales Superfund Site was excavated and steps were taken to minimize the impact from fugitive emissions by watering down the soils and covering them with industrial strength plastic prior to drumming and transport. The MRL Solids Grinding and Slurry Preparation Unit incorporates negative pressure enclosures, nitrogen blanketing, baghouse collection of particulates, and carbon adsorption for organics removal to control fugitive emissions prior to the slurrying of the coal and soil with water.

2.1.4 Safe Drinking Water Act

The Safe Drinking Water Act (SDWA) establishes primary and secondary national drinking water standards. Provisions of the Safe Drinking Water Act apply to remediation of Superfund sites. CERCLA Sections 121(d)(2)(A) and (B) explicitly mention three kinds of surface water or groundwater standards with which compliance is potentially required—Maximum Contaminant Levels (MCLs), Federal Water Quality Criteria (FWQC), and Alternate Concentration Limits (ACLs). CERCLA describes those requirements and how they may be applied to Superfund remedial actions. The guidance is based on

federal requirements and policies; state requirements may apply even stricter standards than those specified in federal regulations.

2.1.5 Clean Water Act

The Clean Water Act (CWA) regulates direct discharges to surface water through the National Pollutant Discharge Elimination System (NPDES) regulations. These regulations require point-source discharges of wastewater to meet established water quality standards. The discharge of wastewater to a municipal sewer requires a discharge permit and concurrence that the wastewater is in compliance with state and local regulatory limits.

The TGP's wastewater streams are normally tested for hazardous characteristics and constituents and, if nonhazardous, are treated by an on-site wastewater treatment facility. The effluent is discharged to the sewer if it meets Los Angeles County Sanitation Districts specifications. If the effluent does not meet these specifications, it is collected, removed, treated, and sent for proper disposal off-site. If the wastewater streams are hazardous, they are not treated on-site. Instead, they are also removed, treated, and sent for disposal in a regulated facility.

Two process wastewater streams, the flash tank blowdown and the clarifier underflow vacuum filtrate, are discharged from the HPSGU II to the WWTU. At the end of each test, two additional wastewater streams—the quench/scrubber system and the lockhopper system water inventories—are also discharge to the WWTU. Because this test program treated a hazardous waste as gasifier feed material, these four water streams were diverted to temporary storage to allow removal by vacuum truck for off-site treatment and disposal. A fifth process wastewater stream containing sodium sulfate and sodium thiosulfate was generated by the Sulfur Removal Unit. This stream did not exhibit hazardous characteristics as a result of gasifying a hazardous waste. As with the other wastewater streams, this stream was diverted to storage, followed by off-site treatment and disposal. Water generated from washing down the process units, normally discharged to the WWTU via a sump system, was also removed by vacuum truck for off-site treatment and disposal.

2.1.6 Toxic Substances Control Act

The disposal of PCBs is regulated under Section 6(e) of the Toxic Substances Control Act of 1976 (TSCA). PCB treatment and disposal regulations are described in 40 CFR Part 761. Materials

containing PCBs in concentrations between 50 and 500 ppm may either be sent to TSCA-permitted landfills or destroyed by incineration at a TSCA-approved incinerator. At concentrations greater than 500 ppm, the material must be incinerated. Sites where spills of PCBs have occurred after May 4, 1987, must be addressed under the PCB Spill Cleanup Policy in 40 CFR Part 761, Subpart G. The policy applies to spills of materials containing 50 ppm or greater of PCBs and establishes cleanup protocols for addressing such releases, based upon the volume and the concentration of the spilled material.

According to Texaco, the TGP is an effective thermal destruction system capable of treating both solid and liquid wastes containing PCBs. If the TGP is to be used to treat PCB-contaminated material, TSCA authorization defining operational, throughput and/or disposal constraints is required. If the PCB-contaminated material contains RCRA wastes, RCRA compliance is also required.

2.1.7 Occupational Safety and Health Administration Requirements

CERCLA remedial actions and RCRA corrective actions must be performed in accordance with OSHA requirements detailed in 20 CFR Parts 1900 through 1926, especially Part 1910.120, which provides for the health and safety of workers at hazardous waste sites. On-site construction activities at Superfund or RCRA corrective action sites must be performed in accordance with Part 1926 of OSHA, which provides safety and health regulations for construction sites. State OSHA requirements, which may be significantly stricter than federal standards, must also be met.

All technicians operating the TGP on waste feeds are required to have completed and maintained OSHA hazardous waste operations training. They must be familiar with all OSHA requirements relevant to hazardous waste sites. For most sites, minimum personal protective equipment (PPE) for technicians will include gloves, hard hats, steel toe boots, and flame-retardant coveralls. Depending on contaminant types and concentrations, additional PPE may be required.

A required health and safety plan for all TGP operations defines the operational site, health and safety personnel responsibilities, chemical and physical hazard assessments, PPE, site control and hazard-zone definition, decontamination procedures, exposure monitoring for chemical and physical variables, recordkeeping, and specific material safety data sheets for all site-related chemicals of concern.

2.2 OPERABILITY OF THE TECHNOLOGY

During the one-week period scheduled for the SITE Demonstration tests a major earthquake and three operational problems impacted the scheduling and operation of the test runs.

The earthquake on January 17, 1994 caused an overall shutdown of MRL. The facility sustained minor piping, equipment, and instrument damage that required overall repairs, and recalibration. The shutdown required a rescheduling of the system preheat, equilibration, and startup sequence and protocol. These changes delayed the planned SITE Test Run No. 1 from January 18, 1994 to January 19, 1994.

Three operational problems caused no significant delay:

1. Plugging of the organic (POHC) spike injection line.
2. Unstable gasifier operation during Run No. 3.
3. A tear in the fine slag vacuum filter belt during Run No. 3.

In all three incidents, actions by MRL personnel successfully addressed the problems to complete the SITE test runs with minimal delay, no process interruption, and minor interference with the test sampling activities.

The plugging of the spike injection line occurred during the startup sequence for Run No. 1. Two POHC spiking compounds—chlorobenzene (VOC) and hexachlorobenzene (SVOC)—were originally planned. A heated system was designed by Texaco to ensure the complete dissolution of the crystalline-solid hexachlorobenzene in the liquid chlorobenzene. Even though the entire system was heated and steam-traced, apparently either the temperature or flow of the solution was low enough in the piping to cause recrystallization of the hexachlorobenzene which plugged the line. After several hours of unsuccessfully attempting to establish a continuous flow, further delays appeared to jeopardize the SITE test runs. The POHC spike solution composition was revised to eliminate the SVOC hexachlorobenzene. This change would still allow the SITE tests to measure the ability of the TGP to achieve a 99.99 percent DRE on the remaining chlorobenzene VOC POHC. The initiation of Run No. 1, however, was further delayed from January 19, 1994 to January 20, 1994.

The unstable gasifier operation, which caused gasifier operating temperatures to increase and sampling activities to be suspended during a 1-hour period of Run No. 3, was apparently caused by the formation of a solid deposit at the slurry feed injector outlet in the gasifier. The solid deposit was shaken loose by a large pulse of nitrogen after which gasifier conditions returned to normal.

The torn filter belt on the fine slag vacuum filter was replaced by maintenance staff during a 4-hour period of Run No. 3 and the filter was returned to service with no unit or SITE sampling shutdown.

None of the above-mentioned incidents were considered substantial episodes affecting critical reliability or maintainability. The earthquake confirmed the structural integrity of the TGP system, which experienced only minor damage. The plugging of the spike injection line was specific to the attempt to introduce hexachlorobenzene for DRE determination, therefore, it will not occur during commercial operation. The gasifier feed injector solid deposit, which caused the gasifier in stability and a rise in operating temperature, was eliminated by operator intervention based on past experience. A torn filter belt on a fine slag vacuum filter is an infrequent but routine maintenance issue. Intermittent operations, length of time in service, and a misalignment of the belt scraper (possibly caused by the earthquake) may have contributed to the belt failure. In any event the belt failure did not affect gasifier operation and only impacted the recovery of the fine slag which was then collected in slurry form.

Based on the minimal delays and interruption caused by the above-mentioned incidents and the continuity of operations exhibited during the overall two-week Demonstration period, it is expected that the reliability and efficiency of the TGP will be consistently high and TGP operations will maintain on-stream efficiencies of approximately 80 percent allowing for routine maintenance and intermittent, unscheduled shutdowns. Two potential process area maintenance problems include solids handling equipment, where the variations and abrasive nature of the coal, soil, and slag matrices may cause above-average wear, and the gasification section, where the high temperatures and pressures provide a difficult environment for equipment operation.

During the three SITE test runs, approximately 40 tons of slurry were treated in the TGP. The total amount of slurry treated during the entire Demonstration period of two weeks, which included scoping runs, initial shakedown, system start-up, a pretest run, the three replicate test runs and post-demonstration processing of the slurry inventory, was approximately 100 tons.

2.3 APPLICABLE WASTES

The versatile TGP can process a variety of waste streams. Virtually any carbonaceous, hazardous, or non-hazardous waste stream can be processed in the TGP if the pretreatment facilities for storage, grinding, screening, and slurrying are adequate to handle and treat the incoming material. Physical characteristics—such as particle size and the viscous or sludge-like nature of the matrix—and chemical properties—such as pH and moisture content—will directly impact on the ability of the TGP equipment to effectively slurry the waste feed.

The TGP test facility at MRL, where the SITE demonstration was conducted, is equipped with a hammer mill for coal crushing, a wet rod mill for waste/coal/water slurrying, and various silos, hoppers, conveyor belts, bucket elevators, and storage tanks to support the movement and storage of the waste, coal, and slurry feed. The Purity Oil Sales Superfund Site soil, excavated for treatment in the TGP, was site-treated with lime to a pH greater than 4 and screened to a particle size less than ¼ inch for easier processing by the MRL materials-handling and slurrying systems.

Depending upon its physical and chemical composition, the waste stream can either be used as the primary gasifier feed or a portion of the mix, combined with a high-Btu fuel such as coal, petroleum coke, or oil. The combined feed must be capable of being slurried, have a heating value that can maintain gasifier temperatures, and produce an ash with a fusion temperature that falls within operational limits.

The ratio of waste feed to fuel can be adjusted to optimize the gasifier operation. Even if a waste stream can be used as the sole feed to the gasifier, blending the waste with a high-Btu feed or fuel ensures continuity and stability of operation.

The TGP can treat wastes that fall into three categories:

(1) Solid or liquid wastes that contain sufficient energy to sustain gasifier operation as the sole feed without adding another higher-heating-value fuel.

(2) Solid wastes with heating values too low to sustain gasifier operation that can be supplemented by a higher-heating-value fuel, such as coal.

(3) Liquid waste with insufficient heating values that can be combined with a higher-heating- value fuel. In this case the liquid waste can be used as the fluid phase of the primary feed slurry.

The TGP has operated commercially for nearly 45 years on feeds such as natural gas and coal, and non-hazardous wastes such as liquid petroleum fractions, and petroleum coke. Texaco's patented gasification process is currently licensed in the U.S. and abroad. The syngas is used for the production of electric power and numerous chemical products, such as ammonia, methanol and high-purity hydrogen. As an innovative process gasifying less traditional and hazardous wastes, Texaco reports that the TGP has processed various waste matrices containing a broad range of hydrocarbon compounds including coal liquefaction residues, California hazardous waste material from an oil production field (petroleum production tank bottoms), municipal sewage sludge, waste oil, used automobile tires, waste plastics, and low-Btu soil. Texaco licensees in Europe have had long-term success in gasifying small quantities of hazardous waste as supplemental feedstock including PCBs, chlorinated hydrocarbons, styrene distillation bottoms, and waste motor oil.

Texaco expects to design TGP facilities with flexible and comprehensive storage and pretreatment systems capable of processing a wide range of waste matrices slurried with coal or oil, water, and additives. If the specific waste exhibits some unusual physical or chemical characteristics that would affect the ability of the pretreatment module to slurry the feed, additional equipment may supplement the existing design.

2.4 KEY FEATURES

The TGP is uniquely different from conventional thermal destruction technologies, particularly incineration, in several key process and design areas.

- The TGP is a gasification process operating with a limited amount of oxygen (partial oxidation) at high temperature and pressure. Because gasification is a reducing process using oxygen, the production of sulfur oxide (SO_x) and NO_x is minimized.

- The centerpiece of the TGP is a proprietary entrained-bed gasifier with concurrent flow of oxygen and hydrocarbon fuel.

- The waste matrix can be wet or dry, and according to the design of the pretreatment system, requires no other specification. The slurry waste feed, mixed with coal, water and any other supplemental stream, is safer and easier to control than a dry system. This allows Texaco to customize the feed to ensure proper slurrying, storage, pumpability, adequate feed heating value, gasifier temperature maintainability, optimum slag fusion, and proper production conditions.

- The TGP destroys organic contaminants to regulatory DREs and can potentially immobilize heavy metals in a glassy coarse slag.

- The TGP produces a usable and economically viable gas stream (syngas) containing hydrogen and carbon monoxide which can be used for further chemical synthesis and electrical power generation.

- The TGP, currently designed and operating as large capacity stationary units, is also being designed as a transportable unit for on-site remediation.

2.5 AVAILABILITY AND TRANSPORTABILITY OF EQUIPMENT

The SITE Demonstration of the TGP was conducted at the MRL using permanent multi-purpose gasification research facilities. This research and development laboratory, with three pilot-scale gasification units, ancillary units, miscellaneous equipment, offices, and other support facilities comprises a fixed-sited area of approximately 10 acres.

Texaco is completing the design of a skid-mounted transportable unit capable of treating hazardous waste on-site, eliminating the need to transport contaminated waste from a hazardous waste site to a fixed treatment facility. The capacity of the proposed unit is based on a dry syngas flow rate of 4.2 million scf/day. The quantity of waste that could be treated would be approximately 100 tpd depending on the composition of the waste.

Skid-mounted components could be constructed in about 24 months; they would be mounted on multiple transportable trailers. The size and configuration of this equipment is based on operating conditions determined at the MRL. Materials-handling equipment may require modifications to process specific waste matrices as discussed earlier and summarized below. Syngas product usage would be

determined on a case-by-case basis. Water streams might receive some treatment, but may have to be removed with the solid products as hazardous waste.

2.6 MATERIALS HANDLING REQUIREMENTS

As discussed in Section 2.3, the TGP is flexible and can process virtually any carbonaceous hazardous or non-hazardous waste stream. The waste material, however, either as the primary feed to the gasifier or combined with a high-Btu fuel such as coal, petroleum, coke, or oil must be capable of being slurried, have a heating value that can maintain gasifier temperatures, and produce an ash with a fusion temperature that falls within operational limits.

Based on the ability of the TGP to accept such a wide range of wastes, materials-handling requirements are dictated by the physical and chemical characteristics of the waste matrix to be slurried. Additional equipment may be required to supplement the existing design of the transportable unit's materials-handling system.

At the waste or Superfund site, contaminated soil will need to be excavated, staged, transported, and loaded into the TGP. Soil should be kept wet and covered with industrial strength plastic to prevent fugitive emissions of particulates. Where VOCs are primary contaminants, soil should be handled within an enclosed system.

2.7 SITE SUPPORT REQUIREMENTS

The TGP support requirements include site conditions (surface, subsurface, clearance, area, topography, climate, and geography), utilities, facilities, and equipment.

For a proposed 100-tpd transportable unit, surface requirements would include a level, graded area capable of supporting the equipment and the structures housing it. The complexity and mechanical structure of a high-temperature, high-pressure TGP unit mandate a level and stable location. The unit cannot be deployed in areas where fragile geologic formations could be disturbed by heavy loads or vibrational stress. Foundations must support the weight of the gasifier system, which is estimated at 50 tons, as well as other TGP support facilities and equipment. The transportable TGP unit would weigh approximately 300 tons and consist of multiple skid-mounted trailers requiring stable access roads that can accommodate oversized and heavy equipment.

The transportable 100-tpd TGP unit would require an area of approximately 40,000 square feet (ft^2) (275 ft x 150 ft), with height clearances of up to 70 feet. This area should accommodate all TGP process operations, although additional space could be needed for special feed preparation and waste/residuals storage facilities.

The transportable TGP unit could be used in a broad range of different climates. Although prolonged periods of freezing temperatures might interfere with soil excavation and handling, coal handling, slurry preparation, and water-related operations, they would not affect a TGP design that incorporates adequate heating, insulating, and heat-tracing capabilities at critical locations.

The proposed transportable 100-tpd TGP unit would require the following utilities: 91 tpd of oxygen, 39 tpd of coal, 5 tpd of lime, 410 kilowatthours per hour (kWh/h) of electrical power, 40 gallons per minute (gpm) of make-up water, and less than 1 tpd of nitrogen.

Support facilities would include staging areas for contaminated soil and coal prior to pretreatment, materials-handling, and slurry preparation. Syngas product would be routed by pipeline directly off-site without any support facilities for storage or transport. Solid products would be stored in roll-off bins. Wastewater would be collected in appropriate tank storage. All support facilities must be designed to control run-off and fugitive emissions. Support equipment would include excavation/transport equipment such as backhoes, front-end loaders, dump trucks, roll-off bins, and storage tanks.

2.8 LIMITATIONS OF THE TECHNOLOGY

The TGP can process virtually all waste stream matrices based on the availability of adequate materials-handling, pretreatment, and slurrying equipment.

The unit's complexity and costs, and preferred tie-in to a syngas user mandate that on-site remediations be limited to relatively large sites and long-term remediations with a minimum of 50,000 tons of waste feed and about two years of operation. A tie-in for the TGP syngas product, such as to a gas turbine electrical generation set or to a manufacturing facility may also affect TGP siting.

SECTION 3
ECONOMIC ANALYSIS

Estimating the cost of employing an innovative technology is a major objective in each SITE Demonstration project. This economic analysis presents data on the costs (excluding profit) for commercial-scale remediations using the Texaco Gasification Process (TGP). Data were compiled during the SITE Demonstration tests conducted at the Texaco Montebello Research Laboratory (MRL) pilot facility. This pilot facility is only used to optimize operating conditions for the design of commercial units; the SITE Demonstration was conducted in the same manner to determine the commercial design on which this economic analysis is based. With a realistic understanding of, and accounting for the Demonstration test results and costs, the following economic analysis extrapolates these test results and costs for larger proposed commercial systems at other sites.

3.1 CONCLUSIONS OF ECONOMIC ANALYSIS

This analysis presents the costs of treating contaminated sites, each containing 100,000 tons of soil. The analysis is based on a transportable TGP unit capable of processing 100 tpd of waste soil on-site. An analysis for a stationary, centralized TGP facility designed to process 200 tpd of waste soil transported to a central plant is also presented. Table 3-1 presents a breakdown of costs per ton of soil into 12 standard cost categories, as defined in Section 3.2.

The two cases illustrate the need for a commercial TGP unit to operate for several years on large, high-contaminated-soil-volume sites at high unit capacity. This is necessary to overcome the complexity and high costs of the TGP design and operation and to take advantage of the value of the TGP syngas product as a useable and marketable commodity.

Table 3-1. Treatment Costs Associated with the TGP

Unit	Onsite TGP		Central TGP	
Soil, tpd design	100	100	200	200
Soil, tpy actual	29,200	25,550	58,400	51,100
Online % utilization factor	80	70	80	70
Years online (each site)	3.42	3.91	15	15
Capital, $ million	11.0	11.0	22.0	22.0
Cost categories, $/ton				
Site preparation	--	--	--	--
Permitting/regulatory	--	--	--	--
Capital equipment	$64.26	$64.26	$44.01	$50.30
Start-up	$25.00	$25.00	$0.00	$0.00
Labor	$52.60	$60.12	$26.30	$30.06
Consumables and supplies				
Oxygen	$54.60	$54.60	$54.60	$54.60
Chemicals	$5.00	$5.00	$5.00	$5.00
Coal	$15.56	$15.56	$15.56	$15.56
Lime	$2.00	$2.00	$2.00	$2.00
Utilities	$6.81	$6.81	$6.81	$6.81
Effluent treatment/disposal	$65.80	$65.80	$65.80	$65.80
Residuals				
Slag	$2.74	$2.74	$2.74	$2.74
Syngas	($7.24)	($7.24)	($14.48)	($14.48)
Analytical services	$5.00	$5.00	$5.00	$5.00
Maintenance	$11.30	$12.92	$11.30	$12.92
Demobilization	$5.00	$5.00	$0.00	$0.00
Total, $/ton	$308.43	$317.56	$224.64	$236.31

The estimated treatment costs, at 80 percent and 70 percent utilization factors, respectively, ranged from $308 to $318 per ton of soil for the 100-tpd transportable unit and from $225 to $236 per ton for the 200-tpd stationary centralized facility. The estimates presented in this analysis may range in accuracy from +50 percent to -30 percent.

3.2 BASIS OF ECONOMIC ANALYSIS

In addition to developing effective cost data, the major objectives of this SITE Demonstration were to demonstrate, on a RCRA-designated hazardous waste feed, the potential of the TGP to produce a useable syngas product, destroy organic compounds, and produce non-hazardous, inert glass-like slag byproducts. The Demonstration test slurry, which consisted of Purity Oil Sales Superfund Site waste soil mixed with other slurry materials including clean soil, coal, water, and heavy metals (specifically lead and barium nitrate) and organic (chlorobenzene) spike compounds, demonstrated the potential of the TGP to meet all of the objectives in a reliable and cost-effective manner and its applicability to the remediation of sites contaminated with both organic and heavy metal compounds.

For the Demonstration test, three runs were conducted, over a two-day period, treating approximately 40 tons of slurry. Solid feed rates during the Demonstration averaged 16 tpd. These feed rates and the overall design and size of the pilot facility at MRL are for research-testing and are not practical for an on-site cleanup or a commercial facility where higher throughputs are required for cost effectiveness.

The proposed Texaco-designed transportable TGP is sized to process hazardous soils and sludges at a rate of 100 tpd of waste solids, which is a six-fold increase over the Demonstration pilot test facility and is considered a minimum capacity for economical and on-site remediation operation. This comparatively small TGP unit falls within the size range of several currently operating units but is less than one-tenth the size of the largest operating TGP unit. The TGP's complexity, costs, and the economic benefit of a tie-in to its syngas product mandate that on-site remediations be limited to relatively large sites with a minimum of 50,000 tons of waste feed and about two years of operation. This commercial transportable TGP would be operated under conditions defined by the performance data from the SITE Demonstration and applied to a commercial design that maximizes the amount of contaminated soil (hazardous waste throughput) in the overall slurry feed.

Because the complexity, costs, and tie-in to a syngas user mandate a large site remediation, an alternative, 200-tpd stationary centralized TGP facility has also been designed and costed as part of the economic analysis.

To provide a basis of cost-effectiveness comparison among technologies, the SITE Program links costs to 12 standard cost categories, listed below:

- Site preparation
- Permitting and regulatory requirements
- Capital equipment
- Start-up
- Labor
- Consumables and supplies
- Utilities
- Effluent treatment and disposal
- Residuals
- Analytical services
- Maintenance
- Demobilization

Some of the cost categories above do not apply to this analysis because they are site-specific, project-specific, or the obligation of site owner/responsible party.

All of these cost categories are defined and discussed in Section 3.4 - Results.

3.3 ISSUES AND ASSUMPTIONS

This analysis is based on the operating results obtained during the SITE Demonstration at the MRL pilot facility using a slurry feed containing Purity Oil Sales Superfund Site waste soil. The pilot facility is used for demonstrations and to optimize operating conditions but due to its small lockhopper and slag handling capacity (ash handling capacity), soil throughput had to be maintained at rates that are lower than actual scaled-up soil feed rates proposed for commercial units. The SITE Demonstration processed a slurry containing over 40 weight-percent coal and approximately 17 weight-percent soil producing a slurry containing 62.5 weight-percent solids. The commercial transportable 100-tpd unit is designed to process a slurry containing less than 20 weight-percent coal and over 40 weight-percent soil, but the same 62.5 weight-percent solids used in the SITE Demonstration. Since the commercial units are being designed for cost-effective site remediations, soil throughputs have been maximized and are higher than the pilot facility feed rates. With higher soil throughputs and lower coal feed rates, feed slurries will have lower heat contents. Commercial units will consume higher quantities of oxygen and auxiliary fuel per ton of soil to offset lower heating values, but overall unit costs per ton of soil will improve based on increased soil throughputs. For this analysis, which is based on the SITE

Demonstration test, the waste feed soil is assumed to have the same comparatively high heating value as the Purity Oil Sales Superfund Site soil because of its contamination with high-heating-value waste oil. This high heating value offsets the need to supplement the feed with auxiliary fuel to maintain gasifier operation. Other soils may not have as high a heating value and will require additional oxygen and auxiliary fuel.

The SITE Demonstration tests produced a useable and potentially marketable medium-Btu syngas. Any proposed site cleanup using the TGP should incorporate the practical end-use of the syngas product. The simplest use for the syngas is as a fuel gas for steam production or power generation. For this analysis the syngas is assumed to be routed off-site without any support facilities for storage, transport, or use as a fuel gas. Further discussions on the planned or currently operating plant uses of the syngas are presented in the Vendor Claims - Appendix I.

The proposed 100-tpd transportable unit, as defined in this analysis, is designed for a 15-year service life. For such a large and complex unit, relocation costs are high; a more practical investment may be the construction and operation of a stationary unit at a central facility for the entire service life of the equipment, which although assumed to be similar to the 15-year life of the transportable design for a comparative analysis, could be 30 years.

The transportable 100-tpd unit and the stationary 200-tpd unit are assumed to operate 24 hours a day, 7 days a week, 292 days a year (at an 80 percent utilization factor for 3.42 years) or 255 days a year (at 70 percent utilization factor for 3.91 years) to remediate 100,000 tons of contaminated soil. The transportable unit is assumed to operate for about 4 years at each of 3 sites during its 15-year life. The stationary unit will operate at a fixed site for 15 years.

Specific issues and assumptions as they relate to each of the standard cost categories are presented below.

3.4 RESULTS

3.4.1 Site Preparation Costs

The costs for excavation, transportation, and pretreatment of a contaminated waste matrix are highly variable. The type of contaminated matrix (i.e., dry soil vs. sticky sludge), the amount of

extraneous debris that must be separated from the matrix, and the contaminant types and concentrations are several variables that will impact on excavation, transportation, and pretreatment costs. Cost for waste handling, and temporary roads and facilities that may be required are not included because they are site-specific. The costs for foundations, utilities, and equipment erection for TGP systems were estimated and are included under the capital equipment and startup cost categories.

3.4.2 Permitting and Regulatory Requirements

The costs for permitting are not included. These may include federal, state, and local permits and will vary with each project and are generally the obligation of the site owner or responsible party. Depending on the site, these costs could be significant. The obtaining of these permits can also be extremely time-consuming. The stationary facility, for example, may require the expenditure of several hundred thousand dollars and a year of application, operation, and reporting activities in order to obtain an operating permit to process RCRA-designated hazardous waste. The monitoring and analytical protocols that would be required on an ongoing basis to support permit and regulatory requirements during operation have been estimated and are included under analytical services.

3.4.3 Capital Equipment

The capital costs are based in part on a comprehensive 1993 cost estimate, prepared by an engineering design firm, for a 100-tpd transportable TGP unit. A portion of the installed equipment, including materials handling for the feed preparation and the gas cleaning and wastewater treating, was estimated by Texaco. The costs of the 200-tpd stationary unit were factored from the costs developed for the 100-tpd transportable unit.

It is assumed that the transportable unit would operate at 3 sites over its 15-year life. The capital costs are based on amortization over 15 years at 8% interest with no tax considerations and no scrap value. The annual capital recovery (amortization) factor is 0.11683 and the total was allocated evenly between the 3 sites.

The components of the capital cost for the 100-tpd transportable unit are presented in Table 3-2.

Table 3-2. Capital Costs for the TGP Unit

a.	Feed receiving and storage	$1,000,000
b.	Grinding and slurry preparation	700,000
c.	Gasification	1,600,000
d.	Lockhopper	800,000
e.	Syngas cleaning	600,000
f.	Sulfur removal	1,900,000
g.	Slag and solids handling	400,000
h.	Wastewater treatment	300,000
i.	Control system	700,000
j.	Utilities and support facilities	1,000,00
k.	Engineering	2,000,000
	Total cost	$11,000,000

3.4.4 Startup

The startup costs are for the labor and contracts for site preparation, equipment installation, utility service connections, and equipment check-out. The 100-tpd transportable unit will occupy approximately an acre and will require 16 weeks for installation. The major contracts will be for foundations and slabs, equipment and structural erection, electrical systems, and controls and instrumentation. The total is estimated at $2,500,000 per site.

Most of the components for the transportable TGP will be shipped in factory-built, structural modules. The largest of these will be 14 ft by 14 ft by 42 ft long. Transportation was estimated on the basis of relocation from the unit's home-base in Texas to a remediation site in California or Illinois.

The startup costs for the central plant are one-time costs and are included in the capital equipment.

3.4.5 Labor

Labor costs are based on six-man crews for each of four shifts per week. The cost for the total staff of 24, at an average all-in cost per hour of $32.00 or $64,000 per year per employee is $1,536,000 per year for both the transportable and stationary units and is independent of the utilization factor.

3.4.6 Consumables and Supplies

The major costs are for oxygen and coal. Oxygen cost is estimated at $60.00 per ton and is expected to be consumed at the rate of 0.91 tons per ton of soil. The cost for site-delivered coal is estimated at $40 per ton and is expected to be consumed at a rate of 0.39 tons per ton of soil. Lime addition, at a rate of 0.05 tons per ton of soil, is estimated at $40 per ton. The costs for gas treating chemicals are $5.00 per ton of soil.

3.4.7 Utilities

The cost for electric power is estimated at $0.06/kWh. The water charge is $1.50 per 1,000 gallons. The stationary plant utilities were estimated at the same rate per ton of soil. The 100-tpd transportable unit utilities consumption were estimated to be $410 kWh/h of electrical power and 40 gpm of make-up water.

3.4.8 Effluent Treatment and Disposal

Disposal costs are estimated for the wastewater, hazardous clarifier bottoms, and fine slag effluents. The syngas product and potentially non-hazardous coarse slag economics are defined in the residuals cost section of this discussion. Effluent treatment costs, including wastewater treatment, are included in other categories as part of the operating process. The one-time SITE Demonstration disposal cost for clarifier bottoms and fine slag was $230 per ton. For a continuous commercial operation, it is assumed that a more cost-effective disposal cost can be negotiated. At 87.7 tons of solids per 100 tons of soil, of which 62.5 weight-percent is non-hazardous coarse slag, the disposal of the 32.9 tpd of the hazardous portion at $200 per ton is $65.80 per ton of soil.

3.4.9 Residuals and Waste Shipping and Handling

The potentially non-hazardous coarse slag can be sold for the cost of transportation from the proposed stationary plant as road or building-block aggregate or returned to the site in the transportable unit case. Nonetheless, to be conservative, a cost of $5 per ton or $2.74 per ton of soil for the coarse slag handling and transport is included for the 62.5 weight-percent of the solids that are non-hazardous.

The syngas product can be valued on a par with natural gas for the transportable unit case and at a higher value for the stationary plant based on its hydrogen and carbon monoxide content. The value of the syngas is estimated at $1.00 per million Btu for the transportable unit and $2.00 per million Btu for the stationary plant. The process, storage, and transport equipment and facilities for the syngas are not included in these cost estimates.

3.4.10 Analytical Services

This cost is based on the sampling and TCLP testing of the solid and liquid effluents and residuals by an independent laboratory on a periodic basis. Tests for lead and several other species, two to four times per day, are estimated to cost $60 to $75 per sample and may add up to $5 per ton of waste processed.

3.4.11 Maintenance and Modifications

Maintenance costs are estimated at 3% of the capital cost per year. This is based on an average of previous DOE studies for a large stationary TGP/combined-cycle power plant at 1.5% of capital cost and actual MRL maintenance costs budgeted at 5% per year.

3.4.12 Demobilization

Site demobilization for a transportable unit is assumed to cost a flat $500,000. This is intended to cover all labor and contracts to close and leave a cleanup site. There is no cost assumed for demobilization at the stationary plant.

SECTION 4
TREATMENT EFFECTIVENESS

Results of the TGP SITE Demonstration relate to the three primary technical objectives listed below:

- Achieve 99.99 percent DREs for specific principal organic hazardous constituents (POHCs).

- Produce a non-hazardous primary solid residual—coarse slag—and secondary solid residuals—fine slag and clarifier bottoms.

- Produce a synthesis gas (syngas) product composed primarily of hydrogen and carbon monoxide that will be usable as a clean fuel source for the production of electrical power or raw material for chemical manufacturing.

Additionally, the Demonstration test data were evaluated to determine two other measures of applicability:

- Overall capital and operating costs for the TGP, including the value of the resulting synthesis gas product.

- The reliability and efficiency of the TGP and its operations throughout the SITE Demonstration.

4.1 INTRODUCTION

Prior to the SITE tests, soil from the Purity Oil Sales Superfund Site in Fresno, California was characterized and evaluated as a potential source of hazardous waste material. Based on constraints

imposed by the State of California under a variance to permitted operations at MRL, the waste feed material could not exhibit characteristics that would define the soil as hazardous under RCRA. Based on this regulatory constraint, excavated soil, treated with lime and prescreened, was analyzed to ensure that it met the TCLP criteria for lead (5 mg/kg) and contained less than 1,000 mg/kg total lead.

To assess the TGP operation and its ability to process a RCRA-designated hazardous waste feed that does not comply with TCLP and WET-STLC regulatory limits, non-RCRA hazardous soil from the Purity Oil Sales Superfund Site in Fresno, California was spiked with lead nitrate and barium nitrate during slurry preparation to create a surrogate RCRA-hazardous waste feed. For the extended SITE Demonstration, additional slurry was required and prepared using a mixture of clean soil and oil spiked with barium nitrate since further supplies of Purity Oil soil could not be obtained. To ensure a sufficient concentration of the designated POHC for DRE determination, chlorobenzene was added to the Purity Oil/clean soil mixed test slurry at the slurry feed line to the gasifier. Table 4-1 shows the overall composition of the mixed, spiked test slurry processed during the TGP SITE Demonstration.

Three runs were conducted over a two-day period, treating approximately 40 tons of slurry. The total amount of slurry treated during the entire Demonstration (scoping runs, initial shakedown, system startup, a pretest run, the three replicate runs, and post-demonstration processing of the slurry inventory) was approximately 100 tons. The following critical process and chemical parameters were measured and analyzed.

Process Parameters

- Slurry feed rate
- Raw syngas, flash gas, and fuel gas flow rates
- Make-up and effluent water flow rates (except neutralized wastewater)
- Weight of coarse slag, fine slag, and clarifier solids
- Organic spike flow rate

Chemical/Analytical Parameters

- VOCs, PCDD/PCDF, and metals in all feed and discharge streams (except neutralized wastewater)

Table 4-1. Composition of Demonstration Slurry Feed

	Slurry, pounds (lb)		
	Purity Oil soil	Clean soil	Total mixed*
Pittsburgh #8 coal	10,511	56,280	66,791
Havoline SAE 30 oil	---	2,050	2,050
L.A. County soil	---	11,000	11,000
Fresno County soil	---	11,080	11,080
Purity Oil soil	5,264	---	5,264
Water	10,529	54,000	64,529
Gypsum	---	2,500	2,500
Surfactant	21	130	151
Barium nitrate	330	1,000	1,330
Lead nitrate	145	---	145
TOTAL	26,800	138,040	164,840

* The total slurry feed does not include the chlorobenzene organic spike (L-5) that was added (at approximately 3,150 milligrams per kilogram (mg/kg) based on slurry flow) to the total mixed slurry flow to the gasifier at 6.20, 6.30, and 6.75 pounds per hour (lb/h) for Runs 1, 2, and 3, respectively.

- TCLP and WET-STLC analyses on waste feed, slurry feed, coarse slag, fine slag, and clarifier solids
- Process gas stream compositions

4.2 DRE

The DRE was the measure of organic destruction and removal efficiency during the Demonstration Test. This parameter is determined by analyzing the concentration of the POHC in the feed slurry and the effluent gas stream(s). For a given POHC, DRE is defined as follows:

$$DRE = \frac{W_{IN} - W_{OUT}}{W_{IN}} \times 100\%$$

Where:

W_{IN} = Mass feed rate of the POHC of interest in the waste stream feed

W_{OUT} = Mass emission rate of the same POHC present in the effluent gas streams prior to release to the flare.

For these TGP SITE tests, DREs were calculated in two ways. For the gasification process, the effluent gas streams included the raw syngas and flash gas; for the overall TGP operation, the effluent gas streams included the fuel gas, the absorber off-gas, and oxidizer off-gas. The POHC identified for the Demonstration was chlorobenzene. This compound was selected as a representative thermally stable compound for the purpose of evaluating the TGP's ability to destroy organic compounds. As shown in Table 4-2, all calculated DREs were greater than 99.99 percent for chlorobenzene.

4.3 SLAG AND SOLID RESIDUALS LEACHABILITY

A major objective of this SITE Demonstration was to evaluate the TGP's ability to produce, from hazardous waste feed, a non-hazardous solid residual in which heavy metals are bound in an inert slag that complies with the regulatory requirements of TCLP. Compliance with the California WET-STLC also applied since the tests were conducted in California. The TCLP and WET-STLC results for the soil, slurry, and solid residual products are presented in Table 4-3.

4.3.1 Test Slurry Leaching Characteristics

The test slurry was spiked with lead nitrate and barium nitrate to create a surrogate RCRA-hazardous waste feed and to evaluate the TGP's ability to produce a non-hazardous solid residual in which heavy metals are bound in an inert slag resulting in TCLP and WET-STLC measurements that are lower than their respective regulatory limits. Table 4-3 shows that the test slurry feed measurements were higher than the TCLP and WET-STLC regulatory limits for lead but lower than the regulatory limits for barium.

Prior to the preparation of the slurry feed for the SITE Demonstration, the excavated Purity Oil Sales Superfund Site soil was spiked with lead nitrate and barium nitrate. The spiked soil was subjected to a TCLP-response test to ensure that the contaminated soil exceeded TCLP regulatory limits. The TCLP measurement for a lead spike of 15,000 mg/kg was 223 mg/L in the soil; the TCLP

Table 4-2. Destruction and Removal Efficiencies (DREs) for Principal Organic Hazardous Constituent (POHC) - Chlorobenzene

DRE for gasification process					
Run	W_{IN}* (lb/h)	Raw syngas (lb/h)	Flash gas (lb/h)	Total W_{OUT}** (lb/h)	DRE*** (%)
1	6.20	0.00016	0.000013	0.000173	99.9972
2	6.30	0.00019	0.000010	0.000200	99.9966
3	6.75	0.00023	0.000014	0.000244	99.9964
Average	6.42	0.00019	0.000012	0.000210	99.9967

DRE for overall Texaco MRL operation						
Run	W_{IN}* (lb/h)	Fuel gas (lb/h)	Abs. offgas (lb/h)	Oxid. offgas (lb/h)	Total W_{OUT}** (lb/h)	DRE*** (%)
1	6.20	0.0000033	0.00010	<0.000019	<0.000122	>99.9980
2	6.30	0.0000620	0.00038	0.000018	0.000460	99.9926
3	6.75	0.0000130	0.00023	0.000011	0.000254	99.9962
Average	6.42	0.0000250	0.00024	<0.000016	<0.000281	>99.9956

* W_{IN} = Mass feed rate of chlorobenzene (POHC) in the waste stream feed.
** W_{OUT} = Mass emission rate of chlorobenzene (POHC) in gas effluent streams.
*** $$DRE = \frac{W_{IN} - W_{OUT}}{W_{IN}} \times 100$$

result for a barium spike of 30,000 mg/kg was 329 mg/L. At these spike concentrations, the Purity Oil soil exceeded the TCLP regulatory limits for lead (5 mg/L) and barium (100 mg/L).

4.3.1.1 Normalized TCLP and WET-STLC Values for Lead in Test Slurry--

The test soil composed of approximately 20 weight-percent Purity Oil soil (lead TCLP of Purity Oil soil: 223 mg/L) and 80 weight-percent clean soil (lead TCLP of clean soil: <0.03 mg/L), could be expected to have a normalized, or corrected, TCLP value for lead of approximately 40 mg/L. The test slurry, composed of approximately 20 weight-percent total soil (normalized TCLP value for lead: 40 mg/L) diluted by the remaining slurry solution of 80 weight-percent coal, gypsum, and water (no lead TCLP value) could be expected to have a calculated TCLP value for lead of around 8 mg/L, which closely approximates the average TCLP measurement of 8.3 mg/L lead for the test slurry. Similarly,

Table 4-3. TCLP and WET-STLC Results
Lead and Barium

	TCLP Pb mg/L		WET-STLC Pb mg/L	
	Range****	Average	Range****	Average
Regulatory value	5.0		5.0	
Purity Oil soil*	223		--	
Clean soil (S-1)**	<0.03		<0.5	
Slurry (SL-1)***	8.1-8.4	8.3	54-61	56
Coarse slag (S-3)	3.3-5.8	4.5	6.7-11.1	9.8
Fine slag (S-4)	11-18.3	14.9	22.8-52.9	43.0
Clarifier solids (S-5)	691-1,330	953	903-1,490	1,167
	TCLP Ba mg/L		**WET-STLC Ba mg/L**	
	Range****	Average	Range****	Average
Regulatory value	100		100	
Purity Oil soil*	329		--	
Clean soil (S-1)**	0.3		<5.0	
Slurry (SL-1)***	0.1-0.2	0.1	<5.0-6.5	<5.5
Coarse slag (S-3)	0.5-0.8	0.6	<5.0	<5.0
Fine slag (S-4)	1.2-2.0	1.75	5.6-10.4	9.3
Clarifier solids (S-5)	1.2-3.8	2.7	14-51.4	38.4

* Lead TCLP of Purity Oil soil (waste feed to produce Purity oil slurry) with 15,000 mg/kg (as elemental lead) lead nitrate spike and barium TCLP of Purity Oil soil with 30,000 mg/kg (as elemental barium) barium nitrate spike-measured in pretest spike study.

** Clean soil is soil matrix used to produce clean soil slurry.

*** The SITE Demonstration slurry (SL-1) is a mixture of slurries produced using Purity Oil soil and clean soil. SL-1 is composed of 26,800 lb of Purity Oil slurry mixed with 138,040 lb of clean soil slurry. (See Table 4-1.)

**** Range of values for SL-1, S-3, and S-4 based on 4 samples and S-5 based on 3 samples.

Pb: Lead
Ba: Barium

an expected normalized WET-STLC value of 280 mg/L lead, based on spiked soil blending, would be consistent with the average WET-STLC measurement of 56 mg/L lead for the test slurry, due to the dilution of the coal, gypsum, and water.

4.3.1.2 Fate of Barium in Test Slurry--

The fate of the barium contaminant indicates that significant changes occurred in the barium chemistry during slurry formulation. A pretest study TCLP value of 329 mg/L was measured in a leachate produced from the spiked Purity Oil soil. This contrasts with the much lower 0.1 mg/L measured in the TCLP leachate from the test slurry matrix, which included coal, gypsum, and water. The introduction of sulfur-containing gypsum and coal could have provided an environment in the slurry that changed the original soluble barium nitrate spike material to insoluble barium sulfate. The relative solubilities of barium nitrate and barium sulfate differ by ten-thousand fold. Since barium sulfate is relatively insoluble, it remains with the solids and does not transfer to the leachate during the TCLP test. The one thousand times reduction in the test slurry TCLP result for barium from the pretest level in the Purity Oil soil would be consistent with a partial speciation change to barium sulfate.

4.3.2 SITE Demonstration Results

The SITE Demonstration showed that the leachability of the lead in the main residual solid product—the coarse slag—was lower than the leachability of the lead in the contaminated/spiked soil. The leachability of the barium essentially remained unchanged. The average TCLP and WET-STLC measurements for coarse slag, which comprised 62.5 weight-percent of the total solid residuals, were lower than the TCLP regulatory levels for lead and barium and the WET-STLC regulatory value for barium. The average TCLP and WET-STLC measurements for fine slag, which constituted 35.9 weight-percent of the total solid residuals, and clarifier solids, which amounted to 1.6 weight-percent, were higher than the TCLP and WET-STLC regulatory limits for lead but lower than the tests' regulatory limit for barium. The leach test results indicated mixed success in meeting the test objectives. Analysis of the effects of dilution by the non-contributing slurry components—coal, water, gypsum—on the TCLP and WET-STLC test results showed that the TGP can potentially produce—as its major solid residual—a coarse slag product with TCLP and WET-STLC measurements below regulatory limits. The TGP effectively treated a soil matrix exhibiting a normalized TCLP value of 40 mg/L for lead and produced a coarse slag with an average TCLP value of 4.5 mg/L lead and a fine slag with an average TCLP value of 14.9 mg/L lead.

The average WET-STLC measurements for all solid residual streams were higher than the WET-STLC regulatory values for lead. However, the TGP demonstrated significant improvement in reducing lead mobility as measured by WET-STLC results. The process treated a soil matrix exhibiting a

normalized WET-STLC value of 280 mg/L for lead and produced a caorse slag with an WET-STLC value of 9.8 mg/L and a fine slag, with an average WET-STLC of 43 mg/L lead.

4.4 SYNTHESIS GAS PRODUCT

4.4.1 Synthesis Gas Composition

The synthesis gas (syngas) product from the TGP is composed primarily of hydrogen, carbon monoxide, and carbon dioxide. For a commercial unit, the raw syngas would receive further treatment in an acid gas treatment system to remove hydrogen sulfide. This would produce a combustible fuel gas that could be burned directly in a gas turbine/electrical generation facility or be synthesized into other chemicals.

The raw gas from the gasifier was sampled and analyzed to evaluate the TGP's ability to gasify a slurry containing a RCRA-hazardous waste material and produce a synthesis gas product. This gas stream was then treated in the Texaco MRL Acid Gas Removal System; the resulting fuel gas product was flared. Table 4-4 shows the compositions of the raw syngas and the fuel gas product.

4.4.2 Products of Incomplete Reaction (PIRs)

The TGP is a gasification process which converts organic materials into syngas by reacting the feed with a limited amount of oxygen (partial oxidation). In addition to the syngas mixture of hydrogen and carbon monoxide, other organic compounds appear as products of the incomplete partial oxidation reaction. The term "PIR" describes the organic compounds detected in the gas product streams as a result of the incomplete reaction process.

All gas streams, including the raw gas, flash gas from the gasification section, fuel gas, absorber off-gas, and oxidizer off-gas contained trace amounts of volatile and semivolatile PIRs. Carbon disulfide, benzene, toluene, naphthalene, naphthalene derivatives, and acenaphthene concentrations were measured in the gas streams at parts per billion (ppb) levels. The POHC—chlorobenzene—was also detected. Small amounts of methylene chloride and phthalates were also detected but likely were

Table 4-4. Synthesis Gas Composition

Raw syngas composition and heating value										
Run	H_2 (vol. %)	CO (vol. %)	CO_2 (vol. %)	CH_4 (ppmv)	N_2 (vol. %)	Ar (vol. %)	COS (ppmv)	H_2S (ppmv)	THC (ppmv)	Heating value (Btu/dscf)
1	34.6	33.0	25.9	87	6.5	0.3	120	1,180	49	219
2	26.9	31.3	26.9	51	5.1	0.0	170	3,050	17	210
3	35.4	39.6	26.2	42	5.7	0.05	130	1,980	14	228
Average	32.3	34.6	26.3	60	5.8	0.1	140	2,070	27	219
Fuel gas composition and heating value										
Run	H_2 (vol. %)	CO (vol. %)	CO_2 (vol. %)	CH_4 (ppmv)	N_2 (vol. %)	Ar (vol. %)	COS (ppmv)	H_2S (ppmv)	THC (ppmv)	Heating value (Btu/dscf)
1	37.6	39.1	21.0	71	5.8	0.2	33	490	32	239
2	38.3	35.0	20.9	49	4.9	0.05	44	580	16	239
3	34.7	41.3	21.2	44	5.6	0.1	50	68	15	239
Average	36.9	38.5	21.0	55	5.4	0.1	42	380	21	239

H_2: Hydrogen
CO: Carbon monoxide
CO_2: Carbon dioxide
CH_4: Methane
N_2: Nitrogen
Ar: Argon
COS: Carbonyl sulfide
H_2S: Hydrogen sulfide
THC: Total hydrocarbons (excluding methane)

sampling and analytical contaminants. Measured concentrations of PCDDs and PCDFs in the gas streams were comparable to the blanks, indicating that these species, if present, were at concentrations less than or equal to the method detection limits (parts per quadrillion). Other compounds, such as xylenes, chloromethane, bromomethane, dibenzofuran, fluorene, and phenanthrene (expected from the thermal treatment of coal and chlorobenzene), were detected at lower concentrations in the flash gas and off-gases.

During the SITE Demonstration all of the effluent gas streams including the fuel gas, and the absorber and oxidizer off-gases, were routed to a flare. For a commercial design, the fuel gas product will be further processed for use as a fuel for power generation or an intermediate for chemical synthesis. The absorber and oxidizer off-gas streams or their equivalent effluents based on the final commercial design will either be flared or further processed, treated, or recycled, based on permit constraints.

4.4.3 Particulate Emissions

During the SITE Demonstration, particulate emissions were measured for the raw syngas and fuel gas streams. These averaged 6.1 milligrams per cubic meter (mg/m^3) in the raw syngas, and 1.3 mg/m^3 in the fuel gas. By comparison, the particulate emission standards for boilers and industrial furnaces processing hazardous waste (40 CFR Part 266 Subpart H), and industrial, commercial, and institutional steam generators processing coal and other fuels (40 CFR Part 60 Subpart Db) are higher than the average measured values for these gas streams. Since the fuel gas product would not be vented or flared in a commercial unit, but would be burned directly in a gas-turbine/electrical-generation facility or synthesized into other chemicals, it is expected that the treated vent gas from any of these downstream facilities will be treated to meet applicable particulate emissions standards. This must be assessed on a case-by-case basis.

4.4.4 Acid Gas Removal

Hydrogen chloride gaseous emission rates measured from 0.0046 to 0.0117 lb/h. The chlorine concentration in the feed slurry, based on a chlorobenzene spike addition equivalent to 3,150 mg/kg in the slurry and the chloride concentration in the slurry, ranged from 4.3 to 4.7 lb/h. Using these figures, the TGP's hydrogen chloride removal efficiency exceeded 99 percent.

Sulfur-containing gas emission rates measured from 2.2 to 2.7 lb/h. The sulfur concentration in the slurry, based on the ultimate analysis for sulfur, ranged from 0.97 to 1.20 weight-percent. Using these figures, the TGP's sulfur removal efficiency averaged 90 percent.

According to Texaco, the MRL systems for acid gas removal are designed to process a wide variation (flow and composition) of gas streams based on the developmental-nature of the research activities conducted there. It is expected that systems designed to meet the specific requirements of proposed commercial TGP units will provide higher removal efficiencies.

4.5 METALS PARTITIONING

The fate of the spike metals in the slurry (lead and barium) appeared to depend on their relative volatilities under TGP operating conditions. Lead—a volatile metal—concentrated in the clarifier solids, which were scrubbed from the raw syngas. Lead probably evaporated in the hot regions of the gasifier and condensed on the fine particles in the cooler areas of the process. The more refractory barium did not concentrate in any particular solid residue. It partitioned throughout the solid residual streams roughly in proportion to the mass of each residual stream.

As presented in Table 4-5, average lead concentrations were 880 mg/kg, 329 mg/kg, 491 mg/kg, and 55,000 mg/kg in the Demonstration slurry, coarse slag, fine slag and clarifier solids, respectively. Although the clarifier solids comprised only 1.6 weight-percent of the solid residuals, they contained 71.1 weight-percent of the measured lead in all the solid residuals. The remaining 28.9 weight-percent of the lead partitioned to the coarse and fine slags.

Average barium concentrations were 2,700 mg/kg, 11,500 mg/kg, 15,300 mg/kg, and 21,000 mg/kg in the Demonstration slurry, coarse slag, fine slag and clarified solids, respectively. The barium partitioned to the solid residual streams in approximate proportion to the mass flow of each stream. The coarse slag, which comprised 62.5 weight-percent of the solid residuals, contained 55 weight-percent of the measured barium in the solid residuals. The remaining 45 weight-percent of the barium partitioned to the fine slag and clarifier solids in approximate proportion to their mass flow.

Table 4-5. Mass Flow Rates and Total Concentrations of Lead and Barium in Slurry Feed and Solid Residuals*

	Slurry (SL-1)	Coarse slag (S-3)	Fine slag (S-4)	Clarifier solids (S-5)
Flow rate (lb/h)				
Range**	2,212-2,291	250-307	151-167	3.1-10.5
Average	2,216	273	157	6.8
% of Residuals	--	62.5	35.9	1.6
Pb concentration (mg/kg)				
Range**	867-899	198-542	217-651	43,400-72,000
Average	880	329	491	55,000
Pb mass rate				
Average (lb/h)	2.00	0.09	0.08	0.42
% of Slurry Pb	--	4.5	4.0	21.0
% of Residuals Pb	--	15.3	13.6	71.1
Ba concentration (mg/kg)				
Range**	1,750-3,580	8,090-16,300	11,800-18,300	15,100-26,300
Average	2,700	11,500	15,300	21,000
Ba mass rate				
Average (lb/h)	6.1	3.1	2.4	0.14
% of Slurry Ba	--	50.8	39.3	2.3
% of Residuals Ba	--	55.0	42.5	2.5

* Mass flow rates of and metal concentrations for slurry are on as received basis; for solid residuals are on dry basis.

** Flow rate range for SL-1, S-3, and S-4 based on 3 measurements and S-5 based on 2 measurements. Pb and Ba concentrations ranges for SL-1, S-3, and S-4 based on 4 samples and S-5 based on 3 samples.

Pb: Lead
Ba: Barium

4.6 PROCESS WASTEWATER

The Demonstration produced three process wastewater streams: process wastewater (flash tank blowdown and quench/scrubber and lockhopper water inventory on shutdown); gasification vacuum filtrate (produced from the vacuum filtration of the clarifier bottoms); and neutralized wastewater from the sulfur removal unit. Samples from each of these streams were collected and analyzed for VOCs, SVOCs, PCDD/PCDF, metals, pH, and organic and inorganic halogens. Samples of the inlet water stream were also analyzed to determine if it was introducing any contaminants of concern.

Lead concentrations in the process wastewater and vacuum filtrate ranged from 12.4 to 38.9 mg/L and from 3.98 to 18.4 mg/L, respectively. Although the majority of the lead was found in the clarifier solids, small amounts of lead or lead compounds remained suspended in the clarifier overhead and traveled to the process wastewater as the flash tank blowdown. Similarly, small amounts of lead remained suspended in the vacuum filtrate and did not settle in the clarifier solids.

Trace concentrations of VOC and SVOC PIRs such as benzene, acetone, carbon disulfide, methylene chloride, naphthalene and naphthalene derivatives, and fluorene were found in the wastewater streams. No concentrations of PCDDs or PCDFs were found at or above the method detection limit of 10 nanograms per liter (ng/L).

Inorganic chloride concentrations in the wastewater streams ranged from 380 mg/L to 6,800 mg/L. These values were, in general, an order of magnitude higher than the concentrations found in the inlet water; they indicated the presence of additional chlorides in the feed. Ammonia was also detected in the process wastewater and vacuum filtrate streams; the pH values of these streams were fairly neutral. The inorganic chloride concentrations indicated the presence of chloride, but the neutral pH values indicate that the chloride species is not acidic. These results show that the HCl produced in the gasification process was removed in the quench and scrubber, neutralized by the ammonia, and discharged in the process wastewater/vacuum filtrate effluents.

Concentrations of organic chloride in the inlet water ranging from 680 mg/kg (Run 3) to 2,500 mg/kg (Pretest) were carried through the system to the wastewater streams. Similar concentrations appeared in the process wastewater, vacuum filtrate, and neutralized wastewater streams.

For proposed commercial units, the wastewater streams would be treated on-site for recycle or for disposal as non-hazardous water.

SECTION 5
OTHER TECHNOLOGY REQUIREMENTS

5.1 ENVIRONMENTAL REGULATION REQUIREMENTS

Section 2 - Technology Applications Analysis, Subsection 2.1 - Objectives - Performance versus ARARs discusses specific environmental regulations pertinent to the overall activities associated with the operation of the TGP.

Permits may be required by state regulatory agencies prior to implementing the TGP system. Permits may also be required to operate the system and to store wastes during and after processing.

If off-site treatment/disposal of contaminated residuals and wastewater is required, they must be taken off site by a licensed transporter to a permitted landfill under manifest documentation.

5.2 PERSONNEL ISSUES

Overall labor requirements for the activities associated with the operation of the TGP are discussed in Section 3 - Economic Analysis.

The excavation and processing of hazardous waste material requires the development of site-specific health and safety plans that address personnel responsibilities, chemical and physical hazards, PPE, site control, hazard-zone definition, decontamination procedures, exposure monitoring, recordkeeping, and maintenance of up-to-date specific material safety data sheets for all site-related chemicals of concern. All technicians involved in excavation activities or operation of the TGP are required to have completed OSHA hazardous waste operations training and must be familiar with all relevant OSHA requirements. For most sites, minimum PPE for technicians will include gloves, hard

hats, steel toe boots, and coveralls. Depending on contaminant types and concentrations, additional PPE may be required; excavation activities may require particulate protection with a cartridge-equipped respirator and specific TGP operations mandate the need for chemical resistant/fire retardant coveralls.

5.3 COMMUNITY ACCEPTANCE

Community acceptance and other Superfund feasibility study evaluation criteria are addressed in the Executive Summary. As mentioned above, Subsection 2.1 - Objectives - Performance versus ARARs also discusses specific environmental regulations criteria that impact on the acceptance of a TGP unit within a specific community or jurisdiction.

Fugitive emissions can be managed by watering down the soils prior to excavation and handling and covering stockpiled soil with plastic.

The TGP's solids grinding and slurry preparation system can include negative pressure enclosures, nitrogen blanketing, baghouse collection of particulates and carbon adsorption for organics removal to control fugitive emissions prior to the slurrying of the coal and soil with water.

The TGP unit can also respond to community noise concerns by the design and noise-dampening of rotating equipment.

SECTION 6
TECHNOLOGY STATUS

6.1 PETROLEUM PRODUCTION TANK BOTTOMS DEMONSTRATION

A demonstration was conducted in 1988 at MRL for the California Department of Health Services where petroleum tank bottoms from a California oil production field were co-gasified with low-sulfur, western coal. This California-designated hazardous waste was fed to the gasifier at a rate of 600 lb/h mixed with 2,450 lb/h of coal slurry. The dry syngas was composed of 39 percent carbon monoxide, 38 percent hydrogen, and 21 percent carbon dioxide. Texaco reported that the solids were non-hazardous, based on California Assessment Manual limits for total and leachable metals in effect at the time of the demonstration. Both the solids and wastewater were free of trace organics and EPA priority pollutants. Treatment results are presented in Appendix II.

6.2 EL DORADO, KANSAS REFINERY PROJECT

Texaco has announced plans to build a 75-million dollar TGP power facility at its El Dorado, Kansas refinery, which will convert about 170 tpd of non-commercial petroleum coke, hydrocarbon streams, and RCRA-listed hazardous wastes into syngas. The syngas, combined with natural gas, will power a gas turbine to produce approximately 40 megawatts of electrical power—enough to meet the full needs of the refinery. The exhaust heat from the turbine will be used to produce 180,000 lb/h of steam—approximately 40 percent of the refinery's requirements. Construction will begin during the first quarter of 1995, with start-up projected for the second quarter of 1996.

The U.S. EPA, Office of Solid Waste and Emergency Response, has reviewed the El Dorado project and has judged that the gasifier would be an exempt recycling unit as provided under 40 CFR 261.6(c)(1) and does not meet the definition of an incinerator, a boiler, or an industrial furnace.

APPENDIX I
VENDOR CLAIMS

Appendix I summarizes claims made by Texaco regarding the SITE Demonstration and the Texaco Gasification Process (TGP). The information presented herein represents Texaco's point of view; its inclusion in this Appendix does not constitute U.S. Environmental Protection Agency approval or endorsement.

I.1 INTRODUCTION

The TGP is a proven, commercial technology with a reputation for flexibility, reliability, efficiency, and environmental superiority. This reputation is based on more than 40 years of worldwide commercial experience and is supported by nearly 50 years of continuous research and development.

Texaco's participation in the SITE Demonstration Program is part of a decade-long effort to expand the use of the technology to waste treatment. The Demonstration showed that the TGP can effectively treat soils and sludges that are contaminated with hazardous organic pollutants while producing a syngas with commercial value. The Demonstration also showed that the process provides a means to concentrate volatile heavy metals into a small stream of solids, potentially suitable for metal reclamation.

The projected treatment costs are lower than other thermal treatment technologies. Also, the nature of the process is such that a single unit can treat soils with varying properties, including type, degree of contamination, moisture content, size distribution, and silica:clay ratio.

The balance of this Appendix I provides additional information related to the results of the Demonstration. Appendix II presents case study results of other testing conducted by Texaco. Together, Appendices I and II include information on:

- Texaco's gasification testing programs and facilities;
- Independent data and test results gathered by Texaco during the Demonstration;
- Pilot-scale tests on other waste feeds conducted by Texaco (Case Studies - Appendix II).

I.2.1 Texaco's Gasification Testing Programs and Facilities

The SITE Demonstration was held at the Montebello Research Laboratory (MRL) where pilot units are available to support Texaco's research and development efforts and to provide the design and permitting data required for commercial projects. The reliability of MRL data for commercial design has been validated over nearly 50 years of experience. Because of the relatively large scale of these units (15-45 tpd of coal equivalent), they are also used to demonstrate and test commercial plant configurations and components.

The scope of the test programs vary to meet the objectives of each project. Normally, such as with a new feedstock, pilot-unit tests are preceeded by laboratory tests to characterize the feed and to determine appropriate operating conditions. These tests are then followed by one or more pilot-unit evaluations, generally of increasing length, ranging from one-half day to confirm operability, to up to 7 days or as needed to gather environmental data

I.2.2 Process Data Gathering and Analysis

MRL's pilot development units are fully equipped and instrumented to gather detailed process data. Operation of the HPSGU II, the Selexol® Acid Gas Removal Unit, and the Sulfur Removal Unit, used during the Demonstration, are controlled using a modern electronic distributed control system. On-line instruments are used to provide continuous data on the flow rates, temperatures, and pressures of the various process streams. Gas stream compositions are monitored using two on-line mass spectrometers. Additional systems allow extensive sampling of the process streams for off-line testing.

Most of the analytical testing is done in the fully-equipped, on-site analytical laboratory. Environmental sampling and analyses are usually contracted to independent laboratories.

Mass and energy balances are calculated by statistically adjusting the raw data to achieve 100 percent closure for carbon, hydrogen, oxygen, nitrogen and sulfur (major species). This is done with the minimum overall change to the raw data while limiting the change in any one variable to no more

than the expected random variation in its measurement. The adjusted data are used as the basis for reporting results.

I.2.3 Syngas Composition

Important characteristics of the TGP are the stability of the process during steady-state operations and the smooth accommodation to variations in the feed rate and composition. Syngas composition data from the Demonstration illustrate this stability. Averages of data, recorded every 60 seconds from the two on-line mass spectrometers during Runs 1-3, are shown in Table I-1; the data from each run are in excellent agreement, with only minimal variations in the syngas composition. This reflects the relatively steady operating conditions during the Demonstration and is consistent with previous pilot-unit and commercial-plant experience.

Table I-1. Syngas Composition Data - On-Line Analysis

Test Run	Run 1	Run 2	Run 3
	Syngas composition, vol%		
Hydrogen (H_2)	34.05	34.27	34.14
Carbon Monoxide (CO)	35.05	36.17	36.18
Carbon Dioxide (CO_2)	27.05	25.54	25.81
Methane (CH_4)	0.00	0.01	0.00
Argon (Ar)	0.15	0.15	0.15
Nitrogen (N_2)	2.98	3.11	2.96
Hydrogen Sulfide (H_2S)	0.90	0.90	0.91
Carbonyl Sulfide (COS)	0.01	0.01	0.00
Total	100.19	100.16	100.15

I.2.4 Mass Balance Data

Unadjusted balances for carbon, hydrogen, nitrogen, sulfur and oxygen were calculated from the compositions and flow rates of each of the streams entering and leaving the gasification pilot unit. For all three runs, the unadjusted balances closed to within 99-101 percent for the five major species, which indicates that the data were of very high quality.

The overall mass balances for Runs 1-3 show that essentially all of the organic matter in the feed was converted to syngas. The unconverted carbon in the residuals represented less than 0.5 weight-percent of the carbon in the feed slurry, and unconverted carbon was well below 0.05 weight-percent of the total weight of the coarse and fine slag.

I.2.5 Metals Partitioning

During the initial stage of pilot-unit operations, there is a tendency for some residual solids to accumulate in portions of the gasification pilot unit. These solids are generally the finer size materials which also tend to be enriched in volatile metal species, such as lead. Recoveries of these species tend to increase with time making it difficult to achieve consistently high recoveries of the residual solids during short operating periods. Therefore, efforts are made to recover the remaining residual solids after each test. The results obtained by Texaco, based on their post-demonstration sampling, are presented in Table I-2.

Table I-2. Mass Flow Rates of Lead and Barium in Slurry Feed and Solid Residuals

	Slurry (SL-1)	Coarse slag (S-3)	Fine slag (S-4)	Clarifier solids (S-5)**	Total recovery
Dry solids					
Avg. flow rate (lb/h)	443.9*	273.1	128.6	5.06	
% of SL-1		61.5	29.0	1.1	91.6
Pb					
Avg. flow rate (lb/h)	1.94	0.524	0.405	0.60	
% of SL-1		27.0	20.0	30.9	78.8
Ba					
Avg. flow rate (lb/h)	9.99	3.34	1.77	0.076	
% of SL-1		33.5	17.7	0.8	52.0

* Mass flow rate based on ash.
** Clarifier solids samples were taken over a 71-hour period before and during the 3 test runs. Slurry, coarse slag, and fine slag samples were taken during the 35-hour period of the 3 test runs.

Pb: Lead
Ba: Barium

I.2.6 Dioxins and Furans

It is known that dioxins and furans (PCDD/PCDF) are formed during the incineration of chlorinated wastes and that they are perhaps not simply the products of incomplete combustion. However, in the reducing atmosphere of a Texaco gasifier, these compounds cannot form and are, based on substantial technical and operations data, destroyed, if present. The data from the SITE Demonstration run show that concentrations of PCDD/PCDF above the detection limits of the analysis, in the range of parts per quadrillion (actually less than 0.01 ng/m^3), could not be reliably measured in the syngas. These concentrations are significantly lower than those expected from incineration.

I.2.7 Slag Stability

The long-term stability of slag products from the TGP was tested indirectly in 1989 through 1992 by a research program at the College of Agricultural Sciences, Pennsylvania State University. Coal gasification slag from the Cool Water Program was evaluated as a hydroponic medium. An unpublished report concluded that chrysanthemums and poinsettias grown in slag-amended media had nutrient contents in the normal range.

I.3 COMMERCIAL DESIGN DIFFERENCES

I.3.1 Unit Design

The HPSGU II pilot gasifier used for the Demonstration is part of a research facility and would not be copied for a commercial plant. A commercial plant would not be designed to handle the broad range of feedstocks processed at MRL, which have included liquefied auto tires and plastics, oily wastes, and sewage sludge. A commercial unit for soil remediation would be designed for a lower operating pressure, have a larger lockhopper to handle the increased volume of slag, and incorporate a more efficient gas cleaning system.

I.3.2 Thermal Efficiency

Most operating gasifiers are designed to maximize the production of hydrogen and carbon monoxide. The TGP is capable of efficient gasification by consuming a minimal part of the fuel value in the feed to maintain the process operating temperature. The use of oxygen rather than air, the small

reactor size with low heat losses, and the entrained-bed design, which allows low residence times, all contribute to the improvement of thermal efficiency.

In the application of TGP to soil remediation, operating at a high thermal efficiency may not be as important as increasing the throughput of soil. Economics may justify using more of the available heat to handle more slag-forming solids. Operation with more oxygen provides the extra heat and results in a greater percentage of carbon dioxide in the syngas.

I.3.3 Uses of Syngas

The valuable constituents of syngas are hydrogen and carbon monoxide when used as chemical feedstocks or used as fuels. Any equipment necessary to further process the syngas was not included in the economic analysis presented in Section 3. The syngas can be combusted directly in a boiler or an engine driving an electric generator, in which case combustion of the syngas will oxidize trace compounds and further reduce their concentrations in the exhaust gases. If the plant is located near a refinery or chemical plant, the syngas may be reformed via further processing to increase the hydrogen or methane content.

I.3.4 Alternative Auxiliary Fuels

The Demonstration was carried out using coal as an auxiliary fuel to supplement the fuel value of the soil. Any higher-Btu source could have been considered as an auxiliary fuel, including waste oil or another high-Btu waste. Two auxiliary fuels that are considered suitable for contaminated soils are oil and petroleum coke.

APPENDIX II
CASE STUDIES

The results of three previous demonstrations of gasification of wastes at the MRL are presented for comparison. No organic compound heavier than methane was found in the raw syngas at a concentration above 1 ppmv during any run. The volatile metals were concentrated in the clarifier solids and in some cases resulted in classifying this small solids stream as a RCRA hazardous waste.

II.1 PETROLEUM PRODUCTION TANK BOTTOMS

In December, 1988, a 25-hour gasification run was made in the Low Pressure Solids Gasification Pilot Unit with a mixture of 20 weight-percent field tank bottoms from the Richfield East Dome Unit of the Los Angeles basin and 80 weight-percent SUFCo Utah coal as part of a study for the California Department of Health Services (Contract 88-T0339). The purpose of the test was to demonstrate the gasification of a RCRA-exempt, low-Btu hazardous waste.

The tank bottoms had a higher heating value of 5,500 Btu/lb, a moisture content of 64.6 weight-percent, and were contaminated with 3,000 mg/kg of benzene, toluene, ethylbenzene, and xylene. The combined slurry feed rate was 2,976 lb/h with a solids concentration of 62 weight-percent.

The gasification process successfully and effectively converted the hazardous material to a useful syngas product and non-hazardous effluents.

II.2 MUNICIPAL SEWAGE SLUDGE

Thirty-four tons of dried sewage sludge produced at Newark, NJ from raw, dewatered sludge, and 4,000 gallons of condensate from the indirect dryers were shipped to MRL for a series of nine gasification runs in December, 1990. The dried sludge was remixed with condensate and ground with

3 parts Pittsburgh #8 coal to 1 part sludge and fed to the HPSGU II in a 53 weight-percent solids slurry. The slurry feed rate was 2,150 lb/h.

As in the SITE Demonstration, volatile heavy metals tended to partition to the clarifier solids. Lead was present in the feed slurry at a concentration of 188 mg/kg and 85.7 weight-percent of the recovered lead was found in the clarifier solids. This stream, representing just 3 weight-percent of the total solids, exceeded the TCLP limits for lead and cadmium. The coarse slag and fine slag streams did not exceed the test limits for any metal.

II.3 HYDROCARBON-CONTAMINATED SOIL

The disposal of a hydrocarbon-contaminated soil by gasification with coal was demonstrated during a 54-hour run in March, 1991. The HPSGU II pilot unit was used to gasify a mixture of 86 weight-percent of Pittsburgh #8 coal and 14 weight-percent topsoil contaminated with 4 weight-percent heavy vacuum gas oil from Texaco's Los Angeles refinery. A total of 3.8 m^3 of topsoil and heavy gas oil was gasified. The gasifier feed rate was 2,150 lb/h of slurry with a solids concentration of 65 weight-percent.

The purpose of the test was to show that the addition of a small amount of contaminated soil would have minimum impact on the operation of the coal gasifier. Extensive environmental data were gathered during this test and demonstrated the feasibility of gasifying a contaminated soil while producing a useful syngas.

The coarse and fine slag were non-hazardous under Federal and California standards. The clarifier solids were above only the California WET-STLC regulatory limits for arsenic and lead. The clarifier solids stream is minor and tends to concentrate the metals in the feed. In this case the volume reduction of hazardous solids was 94 percent.

Typical syngas data from the three case studies described above are summarized in Table II-1.

Table II-1. Raw Syngas Composition and Heating Value

Case Study	II.1	II.2	II.3
Waste feed	Tank bottoms	Sewage sludge	Soil
Syngas composition, vol.%			
Hydrogen (H_2)	37.68	35.0	34.52
Carbon monoxide (CO)	39.45	38.5	48.36
Carbon dioxide (CO_2)	21.21	23.5	15.64
Nitrogen (N_2)	1.32	1.9	0.18
Argon (Ar)	0.08	0.1	0.08
Methane (CH_4), ppmv	300	--	420
High heating value, Btu/dscf			
	317	314	321