United States
Environmental Protection
Agency

Office of Research and
Development
Washington DC 20460

EPA/540/R-99/500a
February 1999

EPA

Superfund Innovative Technology Evaluation Program

Technology Profiles
Tenth Edition

Volume 1
Demonstration Program

SITE

SUPERFUND INNOVATIVE
TECHNOLOGY EVALUATION

EPA/540/R-99/500a
February 1999

SITE
SUPERFUND INNOVATIVE
TECHNOLOGY EVALUATION

Technology Profiles
Tenth Edition

Volume 1
Demonstration Program

National Risk Management Research Laboratory
Office of Research and Development
U.S. Environmental Protection Agency
Cincinnati, Ohio 45268

Printed on Recycled Paper

NOTICE

The development of this document was funded by the U.S. Environmental Protection Agency (EPA) under Contract No. 68-C5-0037, Work Assignment No. 0-32, to Tetra Tech EM Inc. The document was subjected to the Agency's administrative and peer review and was approved for publication as an EPA document. Mention of trade names or commercial products does not constitute endorsement or recommendation for use at any particular hazardous waste site.

FOREWORD

The U.S. Environmental Protection Agency (EPA) is charged by Congress with protecting the Nation's land, air, and water resources. Under a mandate of national environmental laws, EPA strives to formulate and implement actions leading to a compatible balance between human activities and the ability of the natural systems to support and nurture life. To meet these mandates, EPA's research program is providing data and technical support for solving environmental problems today and building a science knowledge base necessary to manage our ecological resources wisely, understand how pollutants affect our health, and prevent or reduce environmental risks in the future.

The National Risk Management Research Laboratory (NRMRL) is EPA's center for investigating technological and management approaches for reducing risks from threats to human health and the environment. The focus of NRMRL's research program is on methods for preventing and controlling pollution to air, land, water, and subsurface resources; protecting water quality in public water systems; remediating contaminated sites and groundwater; and preventing and controlling indoor air pollution. The goal of this research effort is to catalyze development and implementation of innovative, cost-effective environmental technologies; develop scientific and engineering information needed by EPA to support regulatory and policy decisions; and provide technical support and information transfer to ensure effective implementation of environmental regulations and strategies.

This document has been produced as part of NRMRL's strategic long-term research plan. It is published and made available by EPA's Office of Research and Development to assist the user community and to link researchers with their clients.

E. Timothy Oppelt, Director
National Risk Management Research Laboratory

ABSTRACT

The Superfund Innovative Technology Evaluation (SITE) Program, now in its thirteenth year, is an integral part of EPA's research into alternative cleanup methods for hazardous waste sites around the nation. The SITE Program was created to encourage the development and routine use of innovative treatment and monitoring and measurement technologies. Under the program, EPA enters into cooperative agreements with technology developers. These developers research and refine their innovative technologies at bench- or pilot-scale and then, with EPA's support, demonstrate them at hazardous waste sites. As a result, the SITE Program provides environmental decision-makers with data on new, viable treatment technologies that may have performance or cost advantages compared to traditional treatment technologies.

The SITE profiles documents, prepared between July 1998 and October 1998, are intended as reference guides for those interested in technologies participating in the SITE Demonstration Program (Volume I), Emerging Technology Program (Volume II), and Monitoring and Measurement Technologies (MMT) Program (Volume III). The two-page profiles are organized into two sections for each program (except for the MMT Program) for completed and ongoing projects, and are presented in alphabetical order by developer name. Reference tables for SITE Program participants precede the sections and contain EPA and developer contacts. Inquiries about a SITE technology evaluation or the SITE Program should be directed to the specific EPA project manager; inquiries on the technology process should be directed to the specific technology developer.

Each technology profile contains (1) a technology developer and process name, (2) a technology description, including a schematic diagram or photograph of the process (if available), (3) a discussion of waste applicability, (4) a project status report, and (5) EPA project manager and technology developer contacts. The profiles also include summaries of demonstration results, if available. The technology description and waste applicability sections are written by the developer. EPA prepares the status and demonstration results sections.

A Trade Name Index and Applicability Index are also included in the back of each volume. The Trade Name Index allows the reader to identify a technology based on trade name, current company name, and former company name. The Applicability Index is organized by 11 media categories, 19 waste categories, and 14 technology type categories.

TABLE OF CONTENTS

Section **Page**

NOTICE ii
FOREWORD iii
ABSTRACT iv
ACKNOWLEDGEMENTS x

SITE PROGRAM DESCRIPTION 1
SITE PROGRAM CONTACTS 6

DEMONSTRATION PROGRAM 7

Completed Demonstration Program Projects

Active Environmental, Inc.
(TECHXTRACT® Process) 20
American Combustion, Inc. (PYRETRON® Thermal Destruction) 22
ARS Technologies, Inc. (Pneumatic Fracturing Extraction℠ and Catalytic Oxidation) . . . 24
Bergmann, A Division of Linatex, Inc. (Soil and Sediment Washing) 26
Berkeley Environmental Restoration Center
(In Situ Steam Enhanced Extraction Process) 28
Billings and Associates, Inc.
(Subsurface Volatilization and Ventilation System [SVVS®]) 30
BioGenesis℠ Enterprises, Inc.
(BioGenesis℠ Soil and Sediment Washing Process) 32
Bio-Rem, Inc. (Augmented In Situ Subsurface Bioremediation Process) 34
Biotherm, LCC (Biotherm Process™) 36
BioTrol® (Biological Aqueous Treatment System) 38
BioTrol® (Soil Washing System) 40
Brice Environmental Services Corporation (Soil Washing Process) 42
BWX Technologies, Inc. (affiliated with Babock & Wilcox Co.)
(Cyclone Furnace) 44
Calgon Carbon Advanced Oxidation Technologies
(**perox-pure™** Chemical Oxidation Technology) 46
CF Systems Corporation
(Liquified Gas Solvent Extraction [LG-SX] Technology) 48
Chemfix Technologies, Inc. (Solidification and Stabilization) 50
COGNIS, Inc. (TERRAMET® Soil Remediation System) 52
Colorado Department of Public Health and Environment
(Constructed Wetlands-Based Treatment) 54
Commodore Applied Technologies, Inc.
(Solvated Electron Technology, SET™ Remediation System) 56
Cure International, Inc. (CURE®-Electrocoagulation Wastewater Treatment System) . . . 58

TABLE OF CONTENTS (Continued)

Section | Page

Completed Demonstration Program Projects (continued)

E.I. DuPont de Nemours and Company, and Oberlin Filter Company (Membrane Microfiltration) 60
Dynaphore, Inc. (FORAGER® Sponge) 62
ECOVA Corporation (Bioslurry Reactor) 64
Electrokinetics, Inc. (Electrokinetic Soil Processing) 66
ELI Eco Logic Inc. (Gas-Phase Chemical Reduction Process) 68
ELI Eco Logic International Inc. (Thermal Desorption Unit) 70
EnviroMetal Technologies Inc. (In Situ and Ex Situ Metal-Enhanced Abiotic Degradation of Dissolved Halogenated Organic Compounds in Groundwater) 72
EPOC Water, Inc. (Precipitation, Microfiltration, and Sludge Dewatering) 74
Filter Flow Technology, Inc. (Colloid Polishing Filter Method®) 76
Funderburk & Associates (Dechlorination and Immobilization) 78
General Atomics (Circulating Bed Combustor) 80
Geo-Con, Inc. (In Situ Solidification and Stabilization Process) 82
Geosafe Corporation (GeoMelt Vitrification) 84
Geotech Development Corporation (Cold Top Ex-Situ Vitrification of Chromium-Contaminated Soils) 86
GIS\Solutions, Inc. (GIS\Key™ Environmental Data Management System) 88
GRACE Bioremediation Technologies (DARAMEND™ Bioremediation Technology) . . 90
Gruppo Italimpresse (Infrared Thermal Destruction) 92
High Voltage Environmental Applications, Inc. (High-Energy Electron Irradiation) . . . 94
Horsehead Resource Development Co., Inc. (Flame Reactor) 96
Hrubetz Environmental Services, Inc. (HRUBOUT® Process) 98
Hughes Environmental Systems, Inc. (Steam Enhanced Recovery Process) 100
IIT Research Institute/Brown and Root Environmental (Radio Frequency Heating) . . . 102
Ionics RCC (B.E.S.T. Solvent Extraction Technology) 104
KAI Technologies, Inc./Brown and Root Environmental (Radio Frequency Heating) . . 106
Magnum Water Technology (CAV-OX® Process) 108
Matrix Photocatalytic Inc. (Photocatalytic Water Treatment) 110
Maxymillian Technologies, Inc. (Thermal Desorption System) 112
Morrison Knudsen Corporation/Spetstamponazhgeologia Enterprises (Clay-Base Grouting Technology) 114
National Risk Management Research Laboratory (Base-Catalyzed Decomposition Process) 116
National Risk Management Research Laboratory (Volume Reduction Unit) 118
National Risk Management Research Laboratory and INTECH 180 Corporation (Fungal Treatment Technology) 120
National Risk Management Research Laboratory and IT Corporation (Debris Washing System) 122

TABLE OF CONTENTS (Continued)

Section | Page

Completed Demonstration Program Projects (continued)

National Risk Management Research Laboratory, University of Cincinnati, and FRX, Inc. (Hydraulic Fracturing) 124
New York State Department of Environmental Conservation/ ENSR Consulting and Engineering and Larsen Engineers (Ex Situ Biovault) . . 126
New York State Department of Environmental Conservation/ SBP Technologies, Inc. (Vacuum-Vaporized Well System) 128
New York State Department of Environmental Conservation/ R.E. Wright Environmental, Inc. (In Situ Bioventing Treatment System) 130
North American Technologies Group, Inc. (Oleophilic Amine-Coated Ceramic Chip) 132
NOVATERRA Associates (In Situ Soil Treatment [Steam and Air Stripping]) 134
OHM Remediation Services Corp. (X*TRAX™ Thermal Desorption) 136
Radian International LCC (Integrated AquaDetox Steam Vacuum Stripping and Soil Vapor Extraction/Reinjection) 138
Remediation Technologies, Inc. (Liquid and Solids Biological Treatment) 140
Rochem Separation Systems, Inc. (Rochem Disc Tube™ Module System) 142
SBP Technologies, Inc. (Membrane Filtration and Bioremediation) 144
J.R. Simplot Company (The SABRE™ Process) 146
Smith Environmental Technologies Corporation (Low Temperature Thermal Aeration [LTTA®]) 148
SoilTech ATP Systems, Inc. (Anaerobic Thermal Processor) 150
Soliditech, Inc. (Solidification and Stabilization) 152
Sonotech, Inc. (Frequency-Tunable Pulse Combustion System) 154
STC Remediation, A Division of Omega Environmental, Inc. (Organic Stabilization and Chemical Fixation/Solidification) 156
Terra-Kleen Response Group, Inc. (Solvent Extraction Treatment System) 158
Terra Vac (In Situ and Ex Situ Vacuum Extraction) 160
Texaco Inc. (Texaco Gasification Process) 162
Toronto Harbour Commission (Soil Recycling) 164
U.S. Filter/WTS Ultrox (Ultraviolet Radiation and Oxidation) 166
United States Environmental Protection Agency (Excavation Techniques and Foam Suppression Methods) 168
University of Nebraska - Lincoln (Center Pivot Spray Irrigation System) 170
WASTECH, Inc. (Solidification and Stabilization) 172
Roy F. Weston, Inc. (Low Temperature Thermal Treatment System) 174
Roy F. Weston, Inc./IEG Technologies (UVB - Vacuum Vaporizing Well) 176
Wheelabrator Clean Air Systems, Inc. (PO*WW*ER™ Technology) 178
Xerox Corporation (2-PHASE™ EXTRACTION Process) 180

TABLE OF CONTENTS (Continued)

Section — Page

Completed Demonstration Program Projects (continued)

ZENON Environmental Inc. (Cross-Flow Pervaporation System) 182
ZENON Environmental Inc. (ZenoGem™ Process) 184

Ongoing Demonstration Program Projects

Arctic Foundations Inc. (Cyrogenic Barrier) 190
Duke Engineering
(Surfactant Enhanced Aquifer Remediation of Nonaqueous Phase Liquids) 192
Envirometal Technologies, Inc. (Reactive Barrier) 194
Geokinetics International, Inc.
(Electroheat-Enhanced Nonaqueous-Phase Liquids Removal) 196
ITT Night Vision (In situ Enhanced Bioremediation of Groundwater) 198
KSE, Inc. (Adsorption-Integrated-Reaction Process) 200
Lasagna Public-Private Partnership (Lasagna In Situ Soil Remediation) 202
Matrix Photocatalytic Inc. (Photocatalytic Air Treatment) 206
National Risk Management Research Laboratory (Bioventing) 208
Phytokinetics, Inc. (Phytoremediation Process) 210
Phytotech (Phytoremediation Technology) 212
Pintail Systems Incorporated (Spent Ore Bioremediation Process) 214
Praxis Environmental Technologies, Inc. (In Situ Thermal Extraction Process) 216
Process Technologies, Inc. (Photolytic Destruction of Vapor-Phase Halogens) 218
Recycling Sciences International, Inc. (Desorption and Vapor Extraction System) 220
Rocky Mountain Remediation Services, L.L.C. (Envirobond™ Solutions) 222
Sandia National Laboratories (In Situ Electrokinetic Extraction System) 224
Selentec Environmental Technologies, Inc. (Selentec MAG*SEP℠Technology) 226
Sevenson Environmental Services, Inc. (MAECTITE® Chemical Treatment Process) . . 228
SIVE Services (Steam Injection and Vacuum Extraction) 230
Star Organics, L.L.C. (Soil Rescue Remediation Fluid) 232
U.S. Air Force (Phytoremediation of TCE-Contaminated Shallow Groundwater) 234
Vortec Corporation (Oxidation and Vitrification Process) 236

DOCUMENTS AVAILABLE FROM THE U.S. EPA
NATIONAL RISK MANAGEMENT RESEARCH LABORATORY,
SUPERFUND TECHNOLOGY DEMONSTRATION DIVISION 239
VIDEO REQUEST FORM 251
TRADE NAME INDEX 255
APPLICABILITY INDEX 265

LIST OF FIGURES

Figure		Page
1	DEVELOPMENT OF INNOVATIVE TECHNOLOGIES	2
2	INNOVATIVE TECHNOLOGIES IN THE DEMONSTRATION PROGRAM	3
3	INNOVATIVE TECHNOLOGIES IN THE EMERGING TECHNOLOGY PROGRAM	4

LIST OF TABLES

Table		Page
1	COMPLETED SITE DEMONSTRATION PROGRAM PROJECTS AS OF OCTOBER 1998	8
2	ONGOING SITE DEMONSTRATION PROGRAM PROJECTS AS OF OCTOBER 1998	186

ACKNOWLEDGEMENTS

The project manager responsible for the preparation of this document is Teri Richardson of EPA's National Risk Management Research Laboratory in Cincinnati, Ohio. This document was prepared under the direction of Robert Olexsey, Director of the Land Remediation and Pollution Control Division. Key program area contributors for EPA include Stephen Billets, Annette Gatchett, and Randy Parker. Special acknowledgement is given to the individual EPA SITE project managers and technology developers who provided guidance and technical support.

Tetra Tech EM, Inc. prepared this document under the direction and coordination of Teri Richardson and Annette Gatchett.

SITE PROGRAM DESCRIPTION

The U.S. Environmental Protection Agency's (EPA) Superfund Innovative Technology Evaluation (SITE) Program, now in its thirteenth year, encourages the development and implementation of (1) innovative treatment technologies for hazardous waste site remediation, and (2) characterization and monitoring technologies for evaluating the nature and extent of hazardous waste site contamination.

The SITE Program was established by EPA's Office of Solid Waste and Emergency Response (OSWER) and the Office of Research and Development (ORD) in response to the 1986 Superfund Amendments and Reauthorization Act (SARA), which recognized a need for an "Alternative or Innovative Treatment Technology Research and Demonstration Program." The SITE Program is administered by ORD's National Risk Management Research Laboratory (NRMRL), headquartered in Cincinnati, Ohio.

The SITE Program includes the following component programs:

- **Demonstration Program** – Evaluates and verifies cost and performance of promising innovative technologies at selected hazardous waste sites to provide reliable performance, cost, and applicability information for site clean-up decision making

- **Emerging Technology Program** – Provides funding to developers to continue research efforts from the bench- and pilot-scale levels to promote the development of innovative technologies

- **Monitoring and Measurement Technologies Program** – Evaluates technologies that detect, monitor, and measure hazardous and toxic substances to provide more cost-effective methods for producing real-time data during site characterization and remediation

- **Technology Transfer Program** – Disseminates technical information, including engineering, performance, and cost data, on innovative technologies to remove impediments for using innovative technologies

The three volumes comprising the Technology Profiles series, a product of the Technology Transfer Program, describe completed and ongoing projects in the Demonstration, Emerging Technology, and Monitoring and Measurement Programs. Figure 1 shows the relationship among the programs and depicts the process of technology development from initial concept to commercial use.

In the Demonstration Program, the technology is field-tested on hazardous waste materials. Engineering and cost data are gathered on the innovative technology so that potential users can assess the technology's applicability to a particular site. Data collected during the field demonstration are used to assess the performance of the technology, the potential need for pre- and post-processing of the waste, applicable types of wastes and waste matrices, potential operating problems, and approximate capital and operating costs.

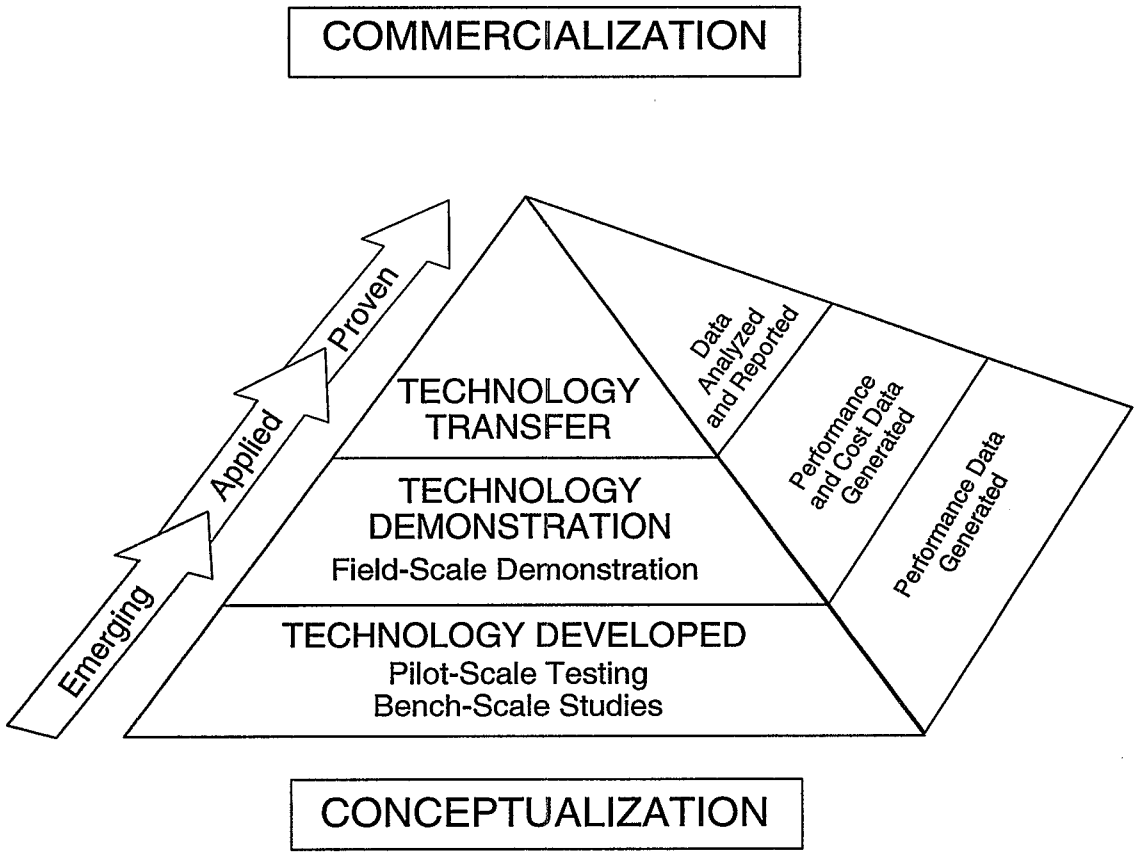

Figure 1: Development of Innovative Technologies

At the conclusion of a SITE demonstration, EPA prepares an Innovative Technology Evaluation Report (ITER), a Technology Evaluation Report (TER), a Technology Capsule, and a Demonstration Bulletin. Often, a videotape of the demonstration is also prepared. These reports evaluate all available information on the technology and analyze its overall applicability to other site characteristics, waste types, and waste matrices. Testing procedures, performance and cost data, and quality assurance and quality control standards are also presented. These demonstration documents are distributed by EPA to provide reliable technical data for environmental decision-making and to promote the technology's commercial use.

The Demonstration Program currently has 106 developers conducting 116 demonstrations. Of these projects, 85 demonstrations are complete and 28 are ongoing. The projects are divided into the following categories: thermal destruction (10), biological degradation (21), physical/chemical treatment (45), solidification/stabilization (10), physical/chemical radioactive waste treatment (2), physical/chemical thermal desorption (19), physical/chemical biological degradation (1), materials handling (3), and other (2). Several technologies represent more than one treatment category. Figure 2 shows the breakdown of technologies in the Demonstration Program. Profiles for technologies demonstrated under the Demonstration Program are located in Volume I.

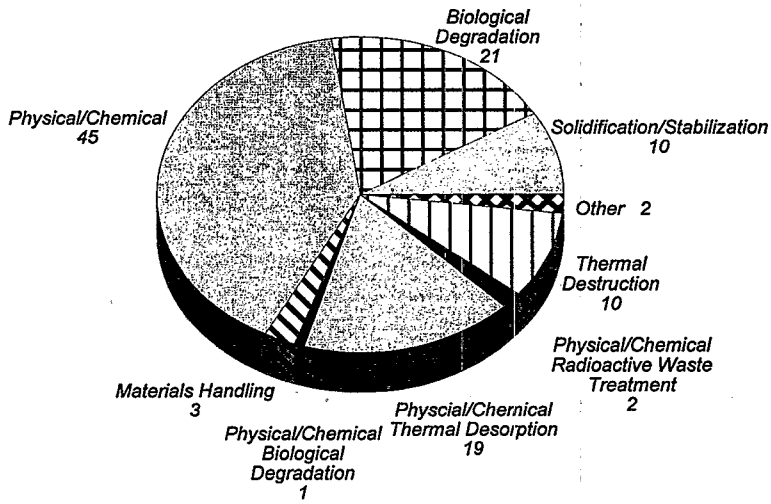

Figure 2: Innovative Technologies in the Demonstration Program

Under the Emerging Technology Program, EPA provides technical and financial support to developers for bench- and pilot-scale testing and evaluation of innovative technologies that are at a minimum proven on the conceptual and bench-scale levels. The program provides an opportunity for a private developer to research and develop a technology for field application and possible evaluation under the Demonstration Program. A technology's performance is documented in a Final Report, journal article, Summary, and Bulletin.

EPA has provided technical and financial support to 77 projects in the Emerging Technology Program. Of these projects, 66 are completed, 7 are continuing in the program, and 4 have exited the program. Eighteen Emerging Technology Program projects are participating in the Demonstration Program, and 7 of these demonstration projects are competed. The 73 active technologies are divided into the following categories: thermal destruction (9), physical/chemical treatment (38), biological degradation (19), solidification/stabilization (2), and materials handling (5). Figure 3 displays the breakdown of technologies in the Emerging Technology Program. Profiles for technologies developed under the Emerging Technology program are located in Volume II.

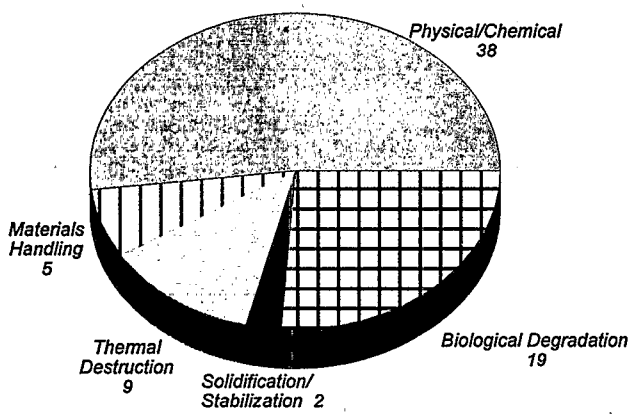

Figure 3: Innovative Technologies in the Emerging Technology Program

The Monitoring and Measurement Technologies (MMT) Program's goal is to assess innovative and alternative monitoring, measurement, and site characterization technologies. To date, 38 technology demonstrations have occurred under the MMT Program. These demonstrations have included four cone penetrometers, 6 field portable X-ray fluorescence units, 6 portable gas chromatographs, 4 spectrophotometers, 12 field test kits, and 6 soil samplers. Profiles for technologies demonstrated under the MMT Program are located in Volume III.

In the Technology Transfer Program, technical information on innovative technologies in the Demonstration Program, Emerging Technology Program, and MMT Program is disseminated to increase the awareness and promote the use of innovative technologies for assessment and remediation at Superfund sites. The goal of technology transfer activities is to promote communication among individuals requiring current technical information for conducting site investigations and cleanups.

The Technology Transfer Program reaches the environmental community through many media, including:

- Program-specific regional, state, and industry brochures
- On-site Visitors' Days during SITE demonstrations
- Demonstration videotapes
- Project-specific fact sheets to comply with site community relations plans
- ITERs, Demonstration Bulletins, Technology Capsules, and Project Summaries
- The SITE Exhibit, displayed nationwide and internationally at conferences
- Networking through forums, associations, regions, and states
- Technical assistance to regions, states, and remediation cleanup contractors

SITE information, including an electronic version of this document, is available through the following on-line information clearinghouses:

SITE Program Home Page: *http://www.epa.gov/ORD/SITE*

Alternative Treatment Technology Information Center (ATTIC)
Internet Access: *http://www.epa.gov/attic*

Cleanup Information Bulletin Board System (CLU-IN)
Help Desk: 301-589-8368; Internet Access: *http://www.clu-in.org*

EPA Remediation and Characterization Innovative Technologies
Internet Access: *http://www.epa.reachit.org*

Groundwater Remediation Technologies Center
Internet Access: *http://www.gwrtac.org*

Technical reports may be obtained by calling the National Service Center for Environmental Publications in Cincinnati, Ohio. To find out about newly published documents or to be placed on the SITE mailing list, call or write to:

USEPA/NSCEP
P.O. Box 42419
Cincinnati, OH 45242-2419
1-800-490-9198

SITE PROGRAM CONTACTS

The SITE Program is administered by EPA's Office of Research and Development (ORD), specifically the National Risk Management Research Laboratory (NRMRL). For further information on the SITE Program or its component programs contact:

Land Remediation and Pollution Control Division

Robert Olexsey
U.S. Environmental Protection Agency
26 West Martin Luther King Drive
Cincinnati, Ohio 45268
513-569-7861
Fax: 513-569-7620

SITE Program

Annette Gatchett
U.S. Environmental Protection Agency
26 West Martin Luther King Drive
Cincinnati, Ohio 45268
513-569-7697
Fax: 513-569-7620

Monitoring and Measurement Program

Stephen Billets
U.S. Environmental Protection Agency
P. O. Box 93478
Las Vegas, Nevada 89193-3478
702-798-2232
Fax: 702-798-2261

Emerging Technology Program

Randy Parker
U.S. Environmental Protection Agency
26 West Martin Luther King Drive
Cincinnati, Ohio 45268
513-569-7271
Fax: 513-569-7620

Remediation and Control Branch

John Martin
U.S. Environmental Protection Agency
26 West Martin Luther King Drive
Cincinnati, Ohio 45268
513-569-7758
Fax: 513-569-7620

Treatment and Destruction Branch

Laurel Staley
U.S. Environmental Protection Agency
26 West Martin Luther King Drive
Cincinnati, Ohio 45268
513-569-7863
Fax: 513-569-7105

SITE Management Support Branch

Patricia Erickson
U.S. Environmental Protection Agency
26 West Martin Luther King Drive
Cincinnati, Ohio 45268
513-569-7884
Fax: 513-569-7676

DEMONSTRATION PROGRAM

The SITE Demonstration Program develops reliable engineering, performance, and cost data on innovative, alternative technologies so that potential users can evaluate a technology's applicability for a specific waste site. Demonstrations are conducted at hazardous waste sites, such as National Priorities List (NPL) sites, non-NPL sites, and state sites, or under conditions that simulate actual hazardous waste sites.

In the past, technologies have been selected for the SITE Demonstration Program through annual requests for proposal (RFP). EPA reviewed proposals to determine the technologies with promise for use at hazardous waste sites. Several technologies also entered the program from current Superfund projects, in which innovative techniques of broad interest were identified for evaluation under the program. In addition, several Emerging Technology projects moved to the Demonstration Program. To date, 11 solicitations have been completed — SITE 001 in 1986 through SITE 010a in 1996.

In 1997, the program shifted from a technology-driven focus to a more integrated approach driven by the needs of the hazardous waste remediation community. The general solicitation for technologies, the annual RFP, will no longer be issued. Instead, a team of stakeholders will match technologies with a selected site, which will be identified by the SITE Program. The stakeholders will evaluate proposals from many technology developers to determine the appropriate innovative technology for the site. Also, information about technologies will be continually collected and maintained in a database, which will serve as a resource to the stakeholders.

The SITE demonstration process typically consists of five steps: (1) matching an appropriate site with an innovative technology; (2) preparing a Demonstration Plan consisting of the test plan, sampling and analysis plan, quality assurance project plan, and health and safety plan; (3) performing community relations activities; (4) conducting the demonstration (ranging in length from days to months); and (5) documenting results in an Innovative Technology Evaluation Report, a Technology Capsule, a Demonstration Bulletin, or other demonstration documents. A demonstration videotape may also be prepared.

Cooperative arrangements among EPA, the developer, and the stakeholders set forth responsibilities for conducting the demonstration and evaluating the technology. Developers are responsible for operating their innovative systems at a selected site, and are expected to pay the costs to transport equipment to the site, operate the equipment on site during the demonstration, and remove the equipment from the site. EPA is responsible for project planning, sampling and analysis, quality assurance and quality control, preparing reports, and disseminating information.

Demonstration data are used to assess the technology's performance, the potential need for pre- and post-processing of the waste, applicable types of wastes and media, potential operating problems, and the approximate capital and operating costs. Demonstration data can also provide insight into long-term operating and maintenance costs and long-term risks.

The Demonstration Program currently includes 106 developers and 116 projects. These projects are organized into two sections: completed projects and ongoing projects. The completed projects are presented in alphabetical order by developer name in Table 1 and in the profiles that follow; the ongoing projects are presented in Table 2 and in the profiles that follow.

TABLE 1
Completed SITE Demonstration Program Projects as of October 1998

Developer/ Technology	Demonstration Location/ Demonstration Date	Technology Contact	EPA Project Manager	Applicable Media	Applicable Waste	
					Inorganic	Organic
Active Environmental, Inc., (formerly EET, Inc.) Mount Holly, NJ TECHXTRACT® Process	Pearl Harbor, Hawaii March 1997	Scott Fay 609-702-1500	Dennis Timberlake 513-569-7547	Porous Solid Materials	Heavy Metals, Radionuclides	PCBs, Hydrocarbons
American Combustion, Inc., Norcross, GA PYRETRON® Thermal Destruction	EPA's Incineration Research facility in Jefferson, AR using soil from Stringfellow Acid Pit Superfund site in Glen Avon, CA/ November 1987-January 1988	Gregory Gitman 770-564-4180	Laurel Staley 513-569-7863	Liquids, Solids, Sludges	Not Applicable	Nonspecific Organics
ARS Technologies, Inc., (formerly Accutech Remedial Systems, Inc.) Highland Park, NJ Pneumatic Fracturing Extraction℠ andCatalytic Oxidation	New Jersey Environmental Cleanup Responsibility Act site in Hillsborough, NJ/July-August 1992	John Liskowitz 908-739-6444	Paul dePercin 513-569-7797	Soil, Rock, Groundwater	Not Applicable	Halogenated and Nonhalogenated VOCs and SVOCs
Bergmann, A Division of Linatex, Inc., Gallatin, TN Soil and Sediment Washing	Toronto, Ontario, Canada and Saginaw Bay Confined Disposal Facility in Saginaw, MI/ April 1992 and May 1992	**OUT OF BUSINESS**	Jack Hubbard 513-569-7507	Soil, Sediment	Heavy Metals, Radionuclides	PCBs, Nonspecific Organics
Berkeley Environmental Restoration Center, Berkeley, CA In Situ Steam Enhanced Extraction Process	Lawrence Livermore National Laboratory in Altamont Hills, CA/December 1993	Kent Udell 510-642-2928 Steve Collins 510-643-1900	Paul dePercin 513-569-7797	Soil, Groundwater	Not Applicable	VOCs and SVOCs, Hydrocarbons, Solvents
Billings and Associates, Inc., Albuquerque, NM Subsurface Volatilization and Ventilation System (SVVS®)	Site in Buchanan, MI/ March 1993 - May 1994	Gale Billings or Rick Billings 505-345-1116	Paul dePercin 513-569-7797	Soil, Sludge, Groundwater	Not Applicable	BTEX, Hydrocarbons
BioGenesis Enterprises, Inc., (formerly Bioversal USA) Springfield, VA BioGenesis℠ Soil and Sediment Washing Process	Refinery site in Minnesota/ November 1992	Charles Wilde 703-913-9700	Annette Gatchett 513-569-7697	Soil, Sediment, Sludge	Nonspecific Inorganics	Volatile and Nonvolatile Hydrocarbons, PCBs, Nonspecific Organics
Bio-Rem, Inc., Butler, IN Augmented In Situ Subsurface Bioremediation Process	Williams AFB in Phoenix, AZ/ May 1992 - June 1993	David Mann 219-868-5823 800-428-4626	Teri Richardson 513-569-7949	Soil, Water	Not Applicable	Halogenated and Nonhalogenated Hydrocarbons

TABLE 1 (Continued)

Completed SITE Demonstration Program Projects as of October 1998

Developer/ Technology	Demonstration Location/ Demonstration Date	Technology Contact	EPA Project Manager	Applicable Media	Applicable Waste	
					Inorganic	Organic
Biotherm, LCC, Somerville, NJ Biotherm Process™	EPA's Research Facility in Edison, NJ using wastes from the PAB Oil site in Abbeville, LA/August 1991	Theodore Trowbridge 908-904-1606	Laurel Staley 513-569-7863	Soil, Sludge, Sediment	Not Applicable	PCBs, Dioxins, PAHs, Hydrocarbon-Soluble Organics
BioTrol®, Eden Prairie, MN Biological Aqueous Treatment System	MacGillis and Gibbs Superfund site in New Brighton, MN/ July - September 1989	Durell Dobbins 612-942-8032	Mary Stinson 732-321-6683	Liquid Waste, Groundwater	Not Applicable	Chlorinated and Nonchlorinated Hydrocarbons, Pesticides
BioTrol®, Eden Prairie, MN Soil Washing System	MacGillis and Gibbs Superfund site in New Brighton, MN/ September - October 1989	Dennis Chilcote 612-942-8032	Mary Stinson 732-321-6683	Soil	Nonspecific Metals	High Molecular Weight Organics, PAHs, PCP, PCBs, Pesticides
Brice Environmental Services Corporation, Fairbanks, AK Soil Washing Process	Alaskan Battery Enterprises Superfund site in Fairbanks, AK/September 1992	Craig Jones 907-452-2512	John Martin 513-569-7758	Soil	Radioactive and Heavy Metals	Hydrocarbons
BWX Technologies, Inc., (Affiliate of Babcock & Wilcox Co.) Lynchburg, VA Cyclone Furnace	Developer's facility in Alliance, OH/November 1991	Evans Reynolds 804-522-6000	Laurel Staley 513-569-7863	Solids, Soil, Sludge	Nonspecific, Low-Level Radionuclides, Heavy Metals	Nonspecific Organics
Calgon Carbon Advanced Oxidation Technologies, (formerly Vulcan Peroxidation Systems, Inc.), Pittsburgh, PA **perox-pure™** Chemical Oxidation Technology	Lawrence Livermore National Laboratory in Altamont Hills, CA/September 1992	Bertrand Dussert 412-787-6681	Norma Lewis 513-569-7665	Groundwater, Wastewater	Not Applicable	Fuel Hydrocarbons, Chlorinated Solvents, PCBs, Phenolics, Pesticides
CF Systems Corporation, Arvada,CO Liquefied Gas Solvent Extraction (LG-SX) Technology	New Bedford Harbor Superfund site in New Bedford, MA/ September 1988	V.M. Foxleitner 208-386-5361	Laurel Staley 513-569-7863	Soil, Sludge, Sediment, Wastewater	Not Applicable	VOCs, SVOCs, PAHs, PCBs, Dioxins, PCP
Chemfix Technologies Inc., Metairie, LA Solidification and Stabilization	Portable Equipment Salvage Company site in Clackamas,OR/ March 1989	David Donaldson 504-831-3600	Edwin Barth 513-569-7669	Soil, Sludge, Solids	Heavy Metals, Low-level Nuclear Waste	Not Applicable
COGNIS, Inc.,** TERRAMET® Soil Remediation System	Twin Cities Army Ammunition Plant in New Brighton, MN/ August 1994	Lou Magdits 573-626-3476	Michael Royer 732-321-6633	Soil, Sludge, Sediment	Lead, Heavy Metals	Not Applicable

TABLE 1 (Continued)
Completed SITE Demonstration Program Projects as of October 1998

Developer/ Technology	Demonstration Location/ Demonstration Date	Technology Contact	EPA Project Manager	Applicable Media	Applicable Waste	
					Inorganic	Organic
Colorado Department of Public Health and Environment (developed by Colorado School of Mines), Denver, CO	Constructed Wetlands-Based Treatment	James Lewis 303-692-3390	Edward Bates 513-569-7774	Acid Mine Drainage	Metals	Not Applicable
Commodore Applied Technologies, Inc., Columbus, OH Solvated Electron Remediation System	Naval Facilities Engineering Service Center in Port Hueneme, CA/September 1996	Peter Harrod 505-872-3508	Paul dePercin 513-569-7797	Soils, Sludges, Sediments, Oils, Hand Tools, Personal Protective Clothing	Not Applicable	PCBs, Pesticides, Halogenated Compounds
Cure International, Inc., (formerly General Environmental Corporation), Jupiter, FL **CURE®**-Electrocoagulation Wastewater Treatment System	DOE's Rocky Flats Plant in Denver, CO/ August - September 1995	David Stanton 561-575-3500	Steven Rock 513-569-7149	Water	Metals and Radionuclides	Not Applicable
E.I. DuPont de Nemours and Company, and Oberlin Filter Co., Wilmington, DE Membrane Microfiltration	Palmerton Zinc Superfund site in Palmerton, PA/ April - May 1990	Ernest Mayer 302-774-2277	John Martin 513-569-7758	Groundwater, Leachate, Wastewater, Electroplating Rinsewaters	Heavy Metals, Cyanide, Uranium	Organic Particulates, Volatile Organics, Oily Wastes
Dynaphore, Inc., Richmond, VA FORAGER® Sponge	National Lead Industry site in Pedricktown, NJ/April 1994	Norman Rainer 804-288-7109	Carolyn Esposito 732-906-6895	Industrial Discharge, Municipal Sewage, Process Streams, Acid Mine Drainage	Metals	Not Applicable
ECOVA Corporation, Boulder, CO Bioslurry Reactor	EPA's Test and Evaluation Facility in Cincinnati, OH/ May - September 1991	William Mahaffey 303-670-2875 303-443-3282	Ronald Lewis 513-569-7856	Soil, Sludge, Sediment	Not Applicable	Creosote and Petroleum Wastes
Electrokinetics, Inc., Baton Rouge, LA Electrokinetic Soil Processing	Electrokinetic Soil Processing	Elif Acar 504-753-8004	Randy Parker 513-569-7271	Soil, Sediment	Heavy Metals and Other Inorganics, Radionuclides	Nonspecific Organics

TABLE 1 (Continued)
Completed SITE Demonstration Program Projects as of October 1998

Developer/ Technology	Demonstration Location/ Demonstration Date	Technology Contact	EPA Project Manager	Applicable Media	Applicable Waste	
					Inorganic	Organic
ELI Eco Logic International, Inc., Rockwood, Ontario, Canada Gas-Phase Chemical Reduction Process	Middleground Landfill in Bay City, MI/ October - November 1992	Jim Nash 519-856-9591	Gordon Evans 513-569-7684	Soil, Sludge, Liquids	Not Applicable	PCBs, PAHs, Chlorinated Dioxins and Dibenzofurans, Chlorinated Solvents and Chlorophenols
ELI Eco Logic International, Inc., Rockwood, Ontario, Canada Thermal Desorption Unit	Middleground Landfill in Bay City, MI/ October - November 1992	Jim Nash 519-856-9591	Gordon Evans 513-569-7684	Soil, Sludge, Liquids	Not Applicable	PCBs, PAHs, Chlorinated Dioxins and Dibenzofurans, Chlorinated Solvents and Chlorophenols
EnviroMetal Technologies, Inc., Guelph, Ontario, Canada In Situ and Ex Situ Metal-Enhanced Abiotic Degradation of Dissolved Halogenated Organic Compounds in Groundwater (Two Demonstrations)	Industrial facility in New Jersey and industrial facility in New York/November 1994 - February 1995 and May - December 1995	Larry Kwicinski 519-824-0432	Annette Gatchett 513-569-7697	Groundwater	Not Applicable	Halogenated Organic Compounds
EPOC Water, Inc., Fresno, CA Precipitation, Microfiltration, and Sludge Dewatering	Iron Mountain Superfund site in Redding, CA/May - June 1992	Rodney Squires 209-291-8144	Jack Hubbard 513-569-7507	Sludge, Wastewater, Leachable Soil	Heavy Metals	Nonspecific Organics
Filter Flow Technology, Inc., League City, TX Colloid Polishing Filter Method®	DOE's Rocky Flats Plant in Denver, CO/September 1993	Tod Johnson 281-332-3438	Annette Gatchett 513-569-7697	Groundwater, Industrial Wastewater	Heavy Metals, Non-tritium Radionuclides	Not Applicable
Funderburk & Associates, (formerly HAZCON, Inc.), Gulfport, MS Dechlorination and Immobilization	Former oil processing plant in Douglassville, PA/October 1987	Ray Funderburk 228-868-9915	Paul dePercin 513-569-7797	Soil, Sludge, Sediment	Heavy Metals	Nonspecific Chlorinated Organics
General Atomics, (formerly Ogden Environmental), San Diego, CA Circulating Bed Combustor	Developer's facility in San Diego, CA using waste from the McColl Superfund site in Fullerton, CA/March 1989	Dan Jenson 619-455-4458	Douglas Grosse 513-569-7844	Soil, Sludge, Slurry, Liquids	Metals, Cyanides, Nonspecific Inorganics	Halogenated and Nonhalogenated Organic Compounds, PCBs
Geo-Con, Inc., Monroeville, PA In Situ Solidification and Stabilization Process (Two Demonstrations)	General Electric Service Shop site in Hialeah, FL/ April 1988	Stephen McCann 412-856-7700	Not Available	Soil, Sediment, Sludge	Nonspecific Inorganics	PCBs, PCP, Other Nonspecific Organics

TABLE 1 (Continued)
Completed SITE Demonstration Program Projects as of October 1998

Developer/ Technology	Demonstration Location/ Demonstration Date	Technology Contact	EPA Project Manager	Applicable Media	Applicable Waste	
					Inorganic	Organic
Geosafe Corporation, Richland, WA GeoMelt Vitrification, previously In Situ Vitrification	Parsons Chemical site in Grand Ledge, MI/March - April 1994	James Hansen Matthew Haass 509-375-0710	Teri Richardson 513-569-7949	Soil, Sludge, Sediments	Nonspecific Inorganics	Nonspecific Organics
Geotech Development Corporation, Newark, NJ Cold-Top Ex Situ Vitrification of Chromium-Contaminated Soils	Geotech's Pilot Plant in Niagara Falls, NY February-March 1997	Thomas Tate 610-337-8515 William Librizzi 201-596-5846	Marta K. Richards 513-569-7692	Solids, Ash, Slag	Hexavalent Chromium, Heavy Metals	Not Applicable
GIS\Solutions, Inc., Concord, CA GIS\Key™ Environmental Data Management System	San Francisco, CA and Washington, DC/ August 1993 (CA) and December 1993 (DC)	Lawrence Eytel 415-827-5400	Richard Eilers 513-569-7809	Not Applicable	Not Applicable	Not Applicable
GRACE Bioremediation Technologies, Mississauga, Ontario, Canada DARAMEND™ Bioremediation Technology	Domtar Wood Preserving facility in Trenton, Ontario, Canada/ Fall 1993 - September 1994	Alan Seech 905-273-5374	Teri Richardson 513-569-7949	Soil, Sediment, Sludge	Lead, Manganese, Zinc	PAHs, PCP, Total Petroleum Hydrocarbons
Gruppo Italimpresse (developed by Shirco Infrared Systems, Inc.), (formerly ECOVA), Rome, Italy Infrared Thermal Destruction (Two Demonstrations)	Peak Oil Superfund site in Brandon, FL and Rose Township-Demode Road Superfund site in Oakland County, MI/ August 1987 (FL) and November 1987 (MI)	Not Available	Laurel Staley 513-569-7863	Soil, Sediment	Not Applicable	Nonspecific Organics
High Voltage Environmental Applications, Inc., (formerly Electron Beam Research Facility, Florida International University, and University of Miami),** Wilmington, NC High-Energy Electron Irradiation	DOE's Savannah River site in Aiken, SC/ September - November 1994	William Cooper 910-962-3450	Franklin Alvarez 513-569-7631	Liquid, Sludge	Not Applicable	Most Organics
Horsehead Resource Development Co., Inc., Palmerton, PA Flame Reactor	Developer's facility in Monaca, PA using waste from National Smelting and Refining Company Superfund site in Atlanta, GA/ March 1991	Regis Zagrocki 610-826-8818	Marta K. Richards 513-569-7692	Soil, Sludge, Industrial Solid Residues	Heavy Metals	Not Applicable

TABLE 1 (Continued)
Completed SITE Demonstration Program Projects as of October 1998

Developer/ Technology	Demonstration Location/ Demonstration Date	Technology Contact	EPA Project Manager	Applicable Media	Applicable Waste	
					Inorganic	Organic
Hrubetz Environmental Services, Inc., Dallas, TX HRUBOUT® Process	Kelly Air Force Base in San Antonio, TX/ January - February 1993	Albert Hrubetz 214-363-7833	Gordon Evans 513-569-7684	Soil	Not Applicable	Halogenated or Nonhalogenated VOCs and SVOCs
Hughes Environmental Systems, Inc., Steam Enhanced Recovery Process	Fuel spill site in Huntington Beach, CA/ August 1991 - September 1993	Not Available	Paul dePercin 513-569-7797	Soil, Groundwater	Not Applicable	VOCs, SVOCs, Hydrocarbons, Solvents
IIT Research Institute/Brown and Root Environmental, Chicago, IL Radio Frequency Heating	Kelly Air Force Base in San Antonio, TX/August 1993	Harsh Dev 312-567-4257 Captain Jeff Stinson 904-283-6254 Clifton Blanchard 423-483-9900	Laurel Staley 513-569-7863	Soil	Not Applicable	Petroleum Hydrocarbons, VOCs, SVOCs, Pesticides
Ionics/Resources Conservation Company, Bellevue, WA B.E.S.T. Solvent Extraction Technology	Grand Calumet River site in Gary, IN/July 1992	William Heins 206-828-2400	Mark Meckes 513-569-7348	Soil, Sludge, Sediment	Not Applicable	Hydrocarbons, PCBs, PAHs, Pesticides, Herbicides
KAI Technologies, Inc./Brown and Root Environmental, Portsmouth, NH Radio Frequency Heating	Kelly Air Force Base in San Antonio, TX/ January - July 1994	Raymond Kasevich 603-431-2266 Captain Jeff Stinson 904-283-6254 Clifton Blanchard 423-483-9900	Laurel Staley 513-569-7863	Soil	Not Applicable	Petroleum Hydrocarbons, VOCs, SVOCs, Pesticides
Magnum Water Technology, El Segundo, CA CAV-OX® Process	Edwards Air Force Base, CA/ March 1993	Dale Cox 310-322-4143 Jack Simser 310-640-7000	Richard Eilers 513-569-7809	Groundwater, Wastewater	Cyanide	Halogenated Solvents, Phenol, PCP, PCBs, BTEX
Matrix Photocatalytic, Inc.,** London, Ontario, Canada Photocatalytic Water Treatment	DOE's Oak Ridge Reservation in Oak Ridge, TN/ August - September 1995	Bob Henderson 519-660-8669	Richard Eilers 513-569-7809	Wastewater, Groundwater, Process Water	Nonspecific Inorganics	Most Organics
Maxymillian Technologies, Inc., (formerly Clean Berkshires, Inc.), Boston, MA Thermal Desorption System	Niagara Mohawk Power Corporation Harbor Point site in Utica, NY/ November - December 1993	Neal Maxymillian 617-557-6077	Ronald Lewis 513-569-7856	Soil	Cyanide	VOCs, SVOCs, PAHs, Coal Tars

TABLE 1 (Continued)
Completed SITE Demonstration Program Projects as of October 1998

Developer/ Technology	Demonstration Location/ Demonstration Date	Technology Contact	EPA Project Manager	Applicable Media	Applicable Waste	
					Inorganic	Organic
Morrison Knudsen Corporation/ Spetstamponazhgeologia Enterprises, Clay-Based Grouting Technology Boise, ID	Mike Horse Mine Site in Montana/1994-1996	Kathryn Levihn Rick Raymondi 208-386-6115	Jack Hubbard 513-569-7507	Groundwater, Liquid	Heavy Metals	Nonspecific Organics
National Risk Management Research Laboratory, Cincinnati, OH Base-Catalyzed Decomposition Process	Koppers Company Superfund site in Morrisville, NC/ August - September 1993	George Huffman 513-569-7431 Yei-Shong Shieh Steven Detwiler 610-431-9100	Terrence Lyons 513-569-7589	Soil, Sediment, Sludge	Not Applicable	PCBs, PCP, Halogenated Compounds, Polychlorinated Dioxins and Furans
National Risk Management Research Laboratory, Cincinnati, OH Volume Reduction Unit	Escambia Treating Company site in Pensacola, FL/ November 1992	Richard Griffiths 513-569-7832	Teri Richardson 513-569-7949	Soil	Metals	Creosote, PCP, PAHs, VOCs, SVOCs, Pesticides
National Risk Management Research Laboratory and INTECH 180 Corporation, Cincinnati, OH Fungal Treatment Technology	Brookhaven Wood Preserving site in Brookhaven, MS/ June - November 1992	John Glaser 513-569-7568 Richard Lamar 801-753-2111	Teri Richardson 513-569-7949	Soil	Not Applicable	PCP, PAHs, Chlorinated Organics
National Risk Management Research Laboratory and IT Corporation, Cincinnati, OH Debris Washing System	Superfund sites in Detroit, MI; Hopkinsville, KY; and Walker County, GA/ September 1988 (MI), December 1989 (KY), and August 1990 (GA)	Michael Taylor Majid Dosani 513-782-4700	Donald Sanning 513-569-7875	Debris	Nonspecific Inorganics	Nonspecific Organics, PCBs, Pesticides
National Risk Management Research Laboratory, University of Cincinnati, and FRX, Inc., Cincinnati, OH Hydraulic Fracturing	Xerox Corporation site in Oak Brook, IL and an underground storage tank spill site in Dayton, OH/July 1991 - September 1992 (IL) and August 1991 - September 1992 (OH)	William Slack 513-469-6040	Michael Roulier 513-569-7796	Soil, Groundwater	Nonspecific Inorganics	Nonspecific Organics
New York State Department of Environmental Conservation/ ENSR Consulting and Engineering, and Larsen Engineers, Albany, NY Ex Situ Biovault	Sweden 3-Chapman site in Sweden, NY/ July - December 1994	Jim Harrington 518-457-0337 David Ramsden 713-520-9900 N. Sathiyakumar 716-272-7310	Carolyn Acheson 513-569-7190	Soil	Not Applicable	Chlorinated and Nonchlorinated VOCs and SVOCs

TABLE 1 (Continued)
Completed SITE Demonstration Program Projects as of October 1998

Developer/ Technology	Demonstration Location/ Demonstration Date	Technology Contact	EPA Project Manager	Applicable Media	Applicable Waste	
					Inorganic	Organic
New York State Department of Environmental Conservation/SBP Technologies, Inc., Albany NY Vacuum-Vaporized Well System	Sweden 3-Chapman site in Sweden, NY/ July 1994 - Fall 1995	Jim Harrington 518-457-0337 Richard Desrosiers 914-694-2280	Michelle Simon 513-569-7469	Soil, Groundwater	Not Applicablee	Chlorinated and Nonchlorinated VOCs
New York State Department of Environmental Conservation/ R.E. Wright Environmental, Inc., Albany, NY In Situ Bioventing Treatment System	Sweden 3-Chapman site in Sweden, NY/ July - December 1994	Jim Harrington 518-457-0337 Richard Cronce 717-944-5501	Greg Sayles 513-569-7607	Soil	Not Applicable	Chlorinated and Nonchlorinated VOCs, SVOCs
North American Technologies Group, Inc., Bellaire, TX Oleophilic Amine-Coated Ceramic Chip	Petroleum Products Corporation site in Fort Lauderdale, FL/ June 1994	Henry Sullivan 713-662-2699	Laurel Staley 513-569-7863	Groundwater, Marine Wastes	Not Applicable	Gasoline, Crude Oil, Diesel Fuel, BTEX, PAHs, PCBs, PCP, Trichloroethene
NOVATERRA, Inc., (formerly Toxic Treatment, Inc.) Los Angeles, CA In Situ Soil Treatment (Steam and Air Stripping)	Annex Terminal in San Pedro, CA/September 1989	Phil La Mori 213-969-9788	Paul dePercin 513-569-7797	Soil, Sludge, Liquids	Nonspecific Inorganics, Heavy Metals	VOCs, SVOCs, Hydrocarbons
OHM Remediation Services Corp., (formerly offered by Chemical Waste Management, Inc.), Findlay, OH X*TRAX™ Thermal Desorption	Re-Solve, Inc., Superfund site in North Dartmouth, MA/ May 1992	George Hay 419-423-3426	Paul dePercin 513-569-7797	Soil, Sludge, Solids	Mercury, Heavy Metals	VOCs, SVOCs, PCBs, Hydrocarbons
Radian International LLC, (formerly Dow Environmental, Inc.), Walnut Creek, CA Integrated AquaDetox Steam Vacuum Stripping and Soil Vapor Extraction/Reinjection	San Fernando Valley Groundwater Basin Superfund site in Burbank, CA/ September 1990	Ken Solcher 713-914-6607	Gordon Evans 513-569-7684	Groundwater, Soil	Not Applicable	VOCs, Chlorinated Hydrocarbons
Remediation Technologies, Inc., Seattle, WA, Liquid and Solids Biological Treatment	Niagara Mohawk Power Corporation facility at Harbor Point in Utica, NY/ June-August 1995	Merv Cooper 206-624-9349	Ronald Lewis 513-569-7856	Soil, Sediment, Sludge	Not Applicable	Biodegradable Organics, Creosote, PCP, PAHs
Rochem Separation Systems, Inc., Torrance, CA Rochem Disc Tube™ Module System	Central Landfill Superfund site in Johnston, RI/August 1994	David LaMonica 310-370-3160	Douglas Grosse 513-569-7844	Nonspecific Liquids, Leachates	Nonspecific Inorganics	Organic Solvents

TABLE 1 (Continued)
Completed SITE Demonstration Program Projects as of October 1998

Developer/ Technology	Demonstration Location/ Demonstration Date	Technology Contact	EPA Project Manager	Applicable Media	Applicable Waste	
					Inorganic	Organic
SBP Technologies, Inc., Baton Rouge, LA Membrane Filtration and Bioremediation	American Creosote Works in Pensacola, FL/October 1991	Not Available	John Martin 513-569-7758	Groundwater, Surface Water, Storm Water, Landfill Leachates, Industrial Process Wastewater	Not Applicable	Organic Compounds, PAHs, Petroleum Hydrocarbons, TCE, PCP
J.R. Simplot Company,** Pocatello, ID The SABRE™ Process (Two Demonstrations)	Bowers Field in Ellensburg, WA and Weldon Spring Ordnance Works site in Weldon Spring, MO/ July 1993 (WA) and September 1993 - February 1994 (MO)	Tom Yergovich 209-858-2511	Wendy Davis-Hoover 513-569-7206	Soil	Not Applicable	Nitroaromatics
Smith Environmental Technologies Corporation, (formerly Canonie Environmental Services Corporation), Englewood, CO Low Temperature Thermal Aeration (LTTA®)	Pesticide site in Phoenix, AZ/ September 1992	Joseph Hutton 303-790-1747	Paul dePercin 513-569-7797	Soil, Sludge, Sediment	Not Applicable	VOCs, SVOCs, OCPs, OPPs, TPH
SoilTech ATP Systems, Inc., Englewood, CO Anaerobic Thermal Processor (Two Demonstrations)	Wide Beach Development Superfund site in Brant, NY and Waukegan Harbor Superfund site in Waukegan, IL/ May 1991 (NY); June 1992 (IL)	Joseph Hutton 303-790-1747	Paul dePercin 513-569-7797	Soil, Sludge, Sediment	Mercury	Petroleum and Halogenated Hydrocarbons, PAHs, VOCs, SVOCs
Soliditech, Inc., Solidification and Stabilization	Imperial Oil Company/Champion Chemical Company Superfund site in Morganville, NJ/ December 1988	Not Available	Jack Hubbard 513-569-7507	Soil, Sludge	Metals, Nonspecific Inorganics	Nonspecific Organics, Oil and Grease
Sonotech, Inc., Atlanta, GA Frequency-Tunable Pulse Combustion System	EPA's Incineration Research Facility in Jefferson, AR/ September - October 1994	Ben Zinn 404-894-3033	Marta K. Richards 513-569-7692	Soil, Sludge, Sediment, Gas	Nonspecific Inorganics	Nonspecific Organics

TABLE 1 (Continued)
Completed SITE Demonstration Program Projects as of October 1998

Developer/ Technology	Demonstration Location/ Demonstration Date	Technology Contact	EPA Project Manager	Applicable Media	Applicable Waste	
					Inorganic	Organic
STC Remediation, A Division of Omega Environmental, Inc., (formerly Silicate Technology Corporation), Scottsdale, AZ Organic Stabilization and Chemical Fixation/Solidification	Selma Pressure Treating Superfund site in Selma, CA/November 1990	Scott Larsen Stephen Pegler 602-948-7100	Edward Bates 513-569-7774	Soil, Sludge, Wastewater	Heavy Metals, Cyanides, Fluorides, Arsenates, Chromates, Selenium	Nonspecific Organics, PAHs
Terra-Kleen Response Group, Inc., Del Mar, CA Solvent Extraction Treatment System	Naval Air Station North Island in San Diego, CA/ May - June 1994	Alan Cash 619-558-8762	Mark Meckes 513-569-7348	Soil, Sludge, Sediment	Not Applicable	PCBs, PCP, PAH, Creosote, Chlorinated Pesticides, PCDD, PCDF
Terra Vac, Inc., Windsor, NJ In Situ and Ex Situ Vacuum Extraction	Groveland Wells Superfund site in Groveland, MA/ December 1987 - April 1988	Joseph Pezzullo 609-371-9446 Esteban Garcia 787-723-9171	Mary Stinson 732-321-6683	Soil, Groundwater	Not Applicable	VOCs, SVOCs
Texaco, Inc., S. El Monte, CA Texaco Gasification Process	Developer's Montebello Research Laboratory using a mixture of soil from the Purity Oil Sales Superfund site in Fresno, CA/January 1994	Tim Leininger 562-699-0948	Marta K. Richards 513-569-7692	Soil, Sludge, Sediment	Nonspecific Inorganics	Nonspecific Organics
Toronto Harbour Commission, Soil Recycling	Toronto Port Industrial District in Toronto, Ontario, Canada/ April - May 1992	Not Available	Teri Richardson 513-569-7949	Soil	Nonspecific Inorganics	Nonspecific Organics
United States Environmental Protection Agency (US EPA), Excavation Techniques and Foam Suppression Methods	McColl Superfund site in Fullerton, CA/June - July 1990	Not Available	Jack Hubbard 513-569-7507	Soil, Sludge, Sediment, Air	Metals	VOCs, SVOCs
U.S. Filter/WTS Ultrox, (A Division of Zimpro Environmental, Inc.), Santa Clare, CA Ultraviolet Radiation and Oxidation	Lorentz Barrel and Drum Company site in San Jose, CA/ March 1989	Richard Woodling 408-588-2609	Norma Lewis 513-569-7665	Groundwater, Leachate, Wastewater	Not Applicable	Halogenated Solvents, VOCs, Pesticides, PCBs, BTEX, PCP
University of Nebraska-Lincoln, Lincoln, NE Center Pivot Spray Irrigation System	North Landfill Subsite in Hastings, NE/ July 1996	Ray Spalding 402-472-7558	Teri Richardson 513-569-7949	Groundwater	Not Applicable	VOCs

TABLE 1 (Continued)
Completed SITE Demonstration Program Projects as of October 1998

Developer/ Technology	Demonstration Location/ Demonstration Date	Technology Contact	EPA Project Manager	Applicable Media	Applicable Waste	
					Inorganic	Organic
WASTECH, Inc., Solidification and Stabilization	Robins Air Force Base in Warner Robins, GA/ August 1991	Not Available	Terrence Lyons 513-569-7589	Soil, Sludge, Liquids	Nonspecific and Radioactive Inorganics	Nonspecific Organics
Roy F. Weston, Inc., West Chester, PA Low Temperature Thermal Treatment System	Anderson Development Company Superfund site in Adrian, MI/ November - December 1991	Mike Cosmos 610-701-7423	Paul dePercin 513-569-7797	Soil, Sludge	Not Applicable	VOCs, SVOCs, Petroleum Hydrocarbons, PAHs, PCBs
Roy F. Weston, Inc./IEG Technologies, West Chester, PA UVB - Vacuum Vaporizing Well	March Air Force Base, CA/ May 1993 - May 1994	Mike Corbin 610-701-3723	Michelle Simon 513-569-7469	Groundwater, Liquid, Soil	Heavy Metals	VOCs, SVOCs
Wheelabrator Clean Air Systems, Inc, (formerly Chemical Waste Management, Inc.), Schaumburg, IL PO*WW*ER™ Technology	Chemical Waste Management's facility in Lake Charles, LA/ September 1992	Myron Reicher 847-706-6900	Randy Parker 513-569-7271	Wastewater, Leachate, Groundwater, Low-Level Radioactive Mixed Waste	Metals, Volatile Inorganic Compounds, Radionuclides	VOCs and Nonvolatile Organic Compounds
Xerox Corporation, Webster, NY 2-PHASE ™ EXTRACTION Process	McClellan Air Force Base in Sacramento, CA/ August 1994 - February 1995	Ron Hess 716-422-3694 Phil Mook 916-643-5443	Paul dePercin 513-569-7797	Groundwater, Soil, Liquid	Nonspecific Soluble Inorganics	VOCs
ZENON Environmental, Inc., (formerly Wastewater Technology Center),** Burlington, Ontario, Canada Cross-Flow Pervaporation System	Naval Air Station North Island in San Diego, CA/ February 1995	Chris Lipski 905-639-6320	Lee Vane 513-569-7799	Groundwater, Leachate, Liquid	Not Applicable	Solvents, Degreasers, Gasoline, Other VOCs
ZENON Environmental, Inc., Burlington, Ontario, Canada ZenoGem™ Process	Nascolite Superfund site in Millville, NJ/ September - November 1994	Tony Tonelli Philip Canning 905-639-6320	Daniel Sullivan 732-321-6677	Groundwater, Leachate, Wastewater	Not Applicable	Nonspecific Organics

Notes:

** From Emerging Technology Program

Page Intentionally Left Blank

ACTIVE ENVIRONMENTAL, INC.
(formerly EET, Inc. TECHXTRACT® Process)

TECHNOLOGY DESCRIPTION:

The TECHXTRACT® process employs patented chemical formulations in successive steps to remove polychlorinated biphenyls (PCB), toxic hydrocarbons, heavy metals, and radionuclides from the subsurface of porous materials such as concrete, brick, steel, and asphalt (see figure below). Each formulation consists of chemicals from up to 14 separate chemical groups, and each formulation can be specifically tailored to each contaminated site.

The process is performed in multiple cycles. Each cycle consists of three stages: surface preparation, extraction, and rinsing. Each stage employs a specific chemical mix.

The surface preparation step uses a solution that contains buffered organic and inorganic acids, sequestering agents, wetting agents, and special hydrotrope chemicals. The extraction formula includes macro- and microemulsifiers in addition to electrolyte, flotation, wetting, and sequestering agents. The rinsing formula is pH-balanced and contains wetting and complexing agents. Emulsifiers in all the formulations help eliminate fugitive releases of volatile organic compounds or other vapors. The chemical formulation in each stage is sprayed on the contaminated surface as a fine mist and worked into the surface with a stiff bristle brush or floor scrubber. The chemicals are allowed to penetrate into the subsurface and are then rinsed and vacuumed from the surface with a high-efficiency, particulate air-filtered, barrel-vacuum. No major capital equipment is required.

Contaminant levels can be reduced from 60 to 90 percent per cycle. One cycle can take up to 24 hours. The total number of cycles is determined from initial contaminant concentrations and final concentration target levels.

WASTE APPLICABILITY:

The TECHXTRACT® process is designed to treat porous solid materials contaminated with PCBs; toxic hydrocarbons such as pesticides; heavy metals, including lead and arsenic; and radionuclides. Because the contaminants are extracted from the surface, the materials can be

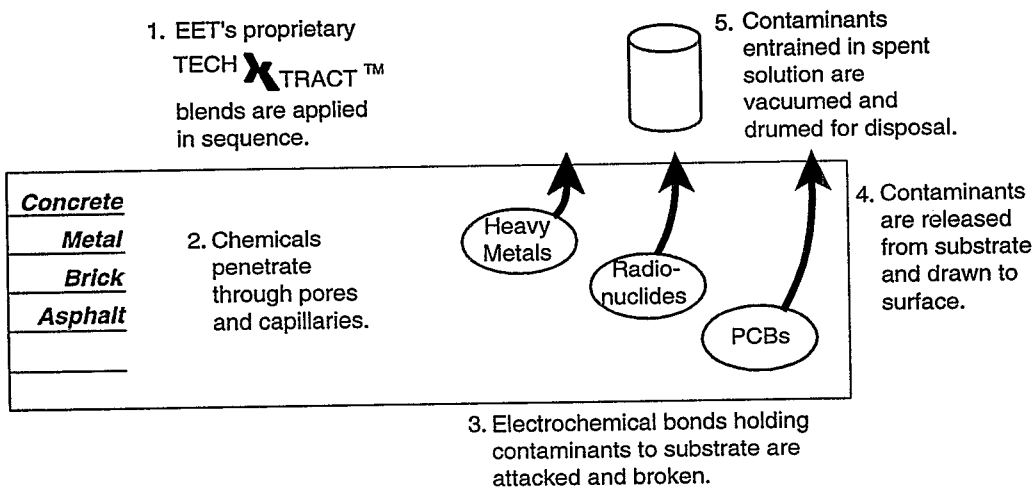

Process Flow Diagram of the TECHXTRACT® Process

The SITE Program assesses but does not approve or endorse technologies.

left in place, reused, or recycled. After treatment, the contaminants are concentrated in a small volume of liquid waste.

In commercial applications, the process has reduced PCB concentrations from 1,000,000 micrograms per 100 square centimeters ($\mu g/100\ cm^2$) to concentrations less than 0.2 $\mu g/100\ cm^2$. Core samples have shown removals from up to 4 inches deep in concrete. The TECHXTRACT® process has been used on concrete floors, walls and ceilings, tools and machine parts, internal piping, valves, and lead shielding. The TECHXTRACT® process has removed lead, arsenic, technetium, uranium, cesium, tritium, and thorium.

STATUS:

This technology was accepted into the SITE Demonstration Program in summer 1994. The demonstration was successfully completed at the Pearl Harbor Naval Complex in April 1997. A video tape of that demonstration is available from the Technology Developer.

The technology has been used in over 400 successful decontamination projects for the U.S. Department of Energy; U.S. Department of Defense; the electric, heavy manufacturing, steel, and aluminum industries; and other applications. Active Environmental, Inc. has developed methods for removing or concentrating metals, particularly radionuclides, in the extracted liquids.

FOR FURTHER INFORMATION:

EPA PROJECT MANAGER:
Dennis Timberlake
U.S. EPA
National Risk Management Research Laboratory
26 West Martin Luther King Drive
Cincinnati, OH 45268
513-569-7547
Fax: 513-569-7676

TECHNOLOGY DEVELOPER CONTACT:
Scott Fay
Active Environmental, Inc.
40 High Street, Suite 100
Mount Holly, NJ 08060
609-702-1500
Fax: 609-702-0265

The SITE Program assesses but does not approve or endorse technologies.

AMERICAN COMBUSTION, INC.
(PYRETRON® Thermal Destruction)

TECHNOLOGY DESCRIPTION:

The PYRETRON® thermal destruction technology controls the heat input during incineration by controlling excess oxygen available to oxidize hazardous waste (see figure below). The PYRETRON® combustor relies on a new technique for mixing auxiliary oxygen, air, and fuel to (1) provide the flame envelope with enhanced stability, luminosity, and flame core temperature, and (2) increase the rate of heat released.

The technology is computer-controlled to automatically adjust the temperatures of the primary and secondary combustion chambers and the amount of excess oxygen. The system adjusts the amount of excess oxygen in response to sudden changes in contaminant volatilization rates in the waste.

The technology fits any conventional incineration unit and can burn liquids, solids, and sludges. Solids and sludges can also be coincinerated when the burner is used with a rotary kiln or similar equipment.

WASTE APPLICABILITY:

The PYRETRON® technology treats high- and low-British thermal unit solid wastes contaminated with rapidly volatilized hazardous organics. In general, the technology treats any waste that can be incinerated. It is not suitable for processing Resource Conservation and Recovery Act heavy metal wastes or inorganic wastes.

STATUS:

The PYRETRON® technology was demonstrated at EPA's Incineration Research Facility in Jefferson, Arkansas, using a mixture of 40 percent contaminated soil from the Stringfellow Acid Pit Superfund site in Glen Avon, California and 60 percent decanter tank tar sludge (K087)

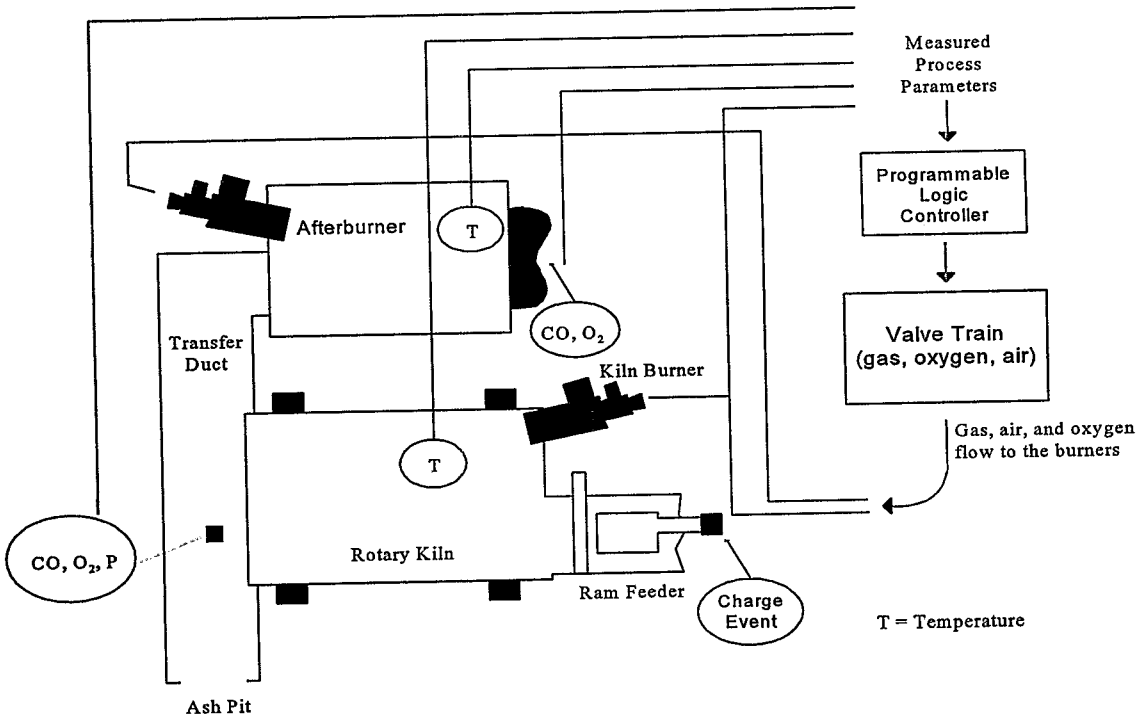

PYRETRON® Thermal Destruction System

The SITE Program assesses but does not approve or endorse technologies.

from coking operations. The demonstration began in November 1987 and was completed at the end of January 1988.

Both the Innovative Technology Evaluation Report (EPA/540/5-89/008) and Applications Analysis Report (EPA/540/A5-89/008) are available from EPA.

DEMONSTRATION RESULTS:

The polynuclear aromatic hydrocarbons naphthalene, acenaphthylene, fluorene, phenanthrene, anthracene, and fluoranthene were selected as the principal organic hazardous constituents (POHC) for the demonstration. The PYRETRON® technology achieved greater than 99.99 percent destruction and removal efficiencies for all six POHCs in all test runs. Other results are listed below:

- The PYRETRON® technology with oxygen enhancement doubled the waste throughput possible with conventional incineration.
- All particulate emission levels from the scrubber system discharge were significantly below the hazardous waste incinerator performance standard of 180 milligrams per dry standard cubic meter at 7 percent oxygen. This standard was in place until May 1993.
- Solid residues were contaminant-free.
- There were no significant differences in transient emissions of carbon monoxide between air-only incineration and PYRETRON® oxygen-enhanced operation with doubled throughput rate.
- Cost savings increase when operating and fuel costs are high and oxygen costs are relatively low.
- The system can double the capacity of a conventional rotary kiln incinerator. This increase is more significant for wastes with low heating values.

FOR FURTHER INFORMATION:

EPA PROJECT MANAGER:
Laurel Staley
U.S. EPA
National Risk Management Research Laboratory
26 West Martin Luther King Drive
Cincinnati, OH 45268
513-569-7863
Fax: 513-569-7105

TECHNOLOGY DEVELOPER CONTACT:
Gregory Gitman
American Combustion, Inc.
4476 Park Drive
Norcross, GA 30093
770-564-4180
Fax: 770-564-4192

The SITE Program assesses but does not approve or endorse technologies.

ARS Technologies, Inc.
(formerly Accutech Remedial Systems, Inc.)
(Pneumatic Fracturing Extraction℠ and Catalytic Oxidation)

TECHNOLOGY DESCRIPTION:

Accutech Remedial Systems, Inc. (Accutech), and the Hazardous Substance Management Research Center at the New Jersey Institute of Technology in Newark, New Jersey have jointly developed an integrated treatment system that combines Pneumatic Fracturing Extraction℠ (PFE℠) with catalytic oxidation. According to Accutech, the system provides a cost-effective, accelerated approach for remediating less permeable formations contaminated with halogenated and nonhalogenated volatile organic compounds (VOC) and semivolatile organic compounds (SVOC).

The Accutech system forces compressed gas into a geologic formation at pressures that exceed the natural in situ stresses, creating a fracture network. These fractures allow subsurface air to circulate faster and more efficiently throughout the formation, which can greatly improve contaminant mass removal rates. PFE℠ also increases the effective area that can be influenced by each extraction well, while intersecting new pockets of contamination that were previously trapped in the formation. Thus, VOCs and SVOCs can be removed faster and from a larger section of the formation.

PFE℠ can be combined with a catalytic oxidation unit equipped with special catalysts to destroy halogenated organics (see photograph below). The heat from the catalytic oxidation unit can be recycled to the formation, significantly raising the vapor pressure of the

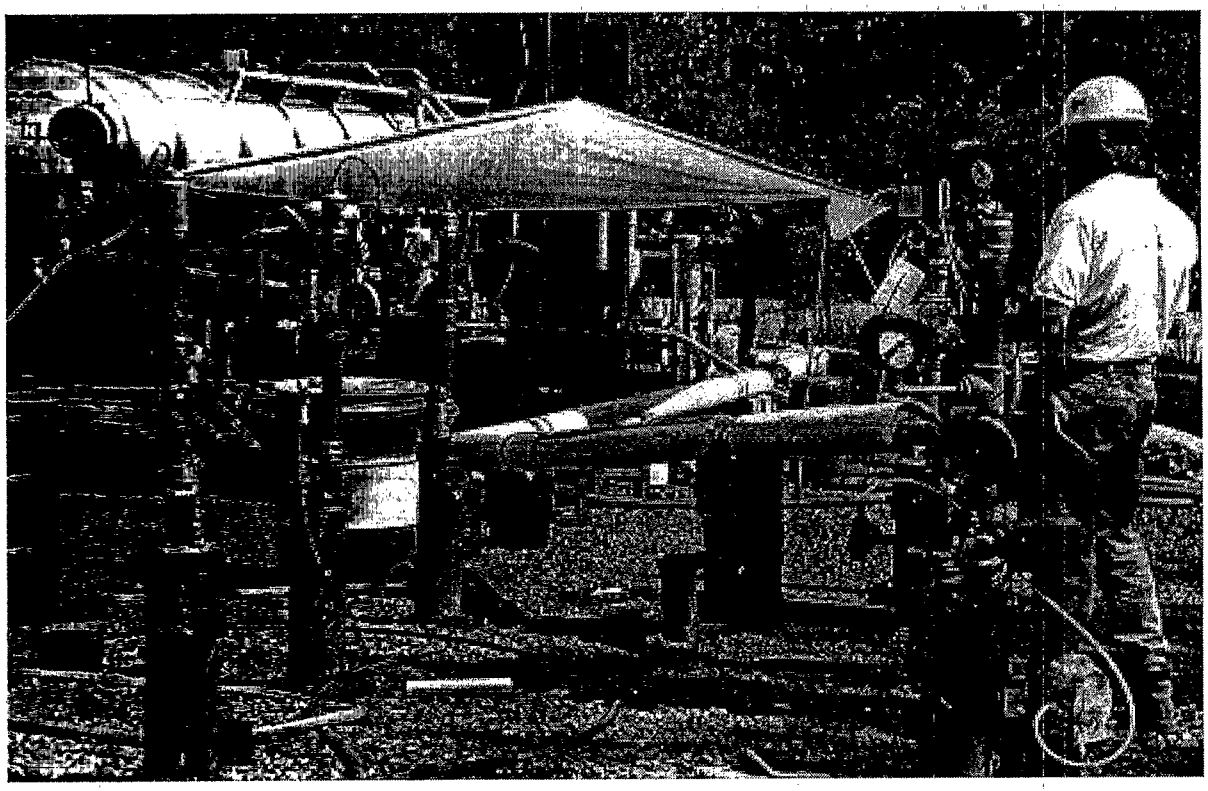

The SITE Program assesses but does not approve or endorse technologies.

contaminants. Thus, VOCs and SVOCs volatilize faster, making cleanup more efficient. PFE^{SM} can also be combined with hot gas injection (HGI), an in situ thermal process, to further enhance VOC and SVOC removal rates. HGI returns to the ground the energy generated during catalytic oxidation of the VOCs.

WASTE APPLICABILITY:

The Accutech system can remove halogenated and nonhalogenated VOCs and SVOCs from both the vadose and saturated zones. The integrated treatment system is cost-effective for treating soil and rock when less permeable geologic formations limit the effectiveness of conventional in situ technologies.

According to Accutech, the PFE^{SM}-HGI integrated treatment system is cost-effective for treating less permeable soil and rock formations where conventional in situ technologies have limited effectiveness. Activated carbon is used when contaminant concentrations decrease to levels where catalytic oxidation is no longer cost-effective.

STATUS:

The Accutech technology was accepted into the SITE Demonstration Program in December 1990. The demonstration was conducted in summer 1992 at a New Jersey Department of Environmental Protection and Energy Environmental Cleanup Responsibility Act site in Hillsborough, New Jersey. During the demonstration, trichloroethene and other VOCs were removed from a siltstone formation. Results of this demonstration were published in the following documents available from EPA:

- Technology Evaluation Report (EPA/540/R-93/509)
- Technology Demonstration Summary (EPA/540/SR-93/509)
- Demonstration Bulletin (EPA/540/MR-93/509)
- Applications Analysis Report (EPA/540/AR-93/509)

DEMONSTRATION RESULTS:

The demonstration results indicate that PFE^{SM} increased the effective vacuum radius of influence nearly threefold. PFE^{SM} also increased the rate of mass removal up to 25 times over the rates measured using conventional extraction technology.

FOR FURTHER INFORMATION:

TECHNOLOGY DEVELOPER CONTACT:
John Liskowitz
ARS Technologies, Inc.
271 Cleveland Ave.
Highland Park, NJ 08904
732-296-6626 Ext. 13
Fax: 732-296-6625
e-mail: jjl@arstechnologies.com

The SITE Program assesses but does not approve or endorse technologies.

BERGMANN, A DIVISION OF LINATEX, INC.
(Soil and Sediment Washing)

TECHNOLOGY DESCRIPTION:

The soil and sediment washing technology developed by Bergmann, A Division of Linatex, Inc.'s, (Bergman), separates contaminated particles by density and grain size (see photograph below). The technology operates on the hypothesis that most contamination is concentrated in the fine particle fraction (less than 45 microns [μm]) and that contamination of larger particles is generally not extensive.

After contaminated soil is screened to remove coarse rock and debris, water and chemical additives such as surfactants, acids, bases, and chelators are added to the medium to produce a slurry feed. The slurry feed flows to an attrition scrubbing machine. A rotary trommel screen, dense media separators, cyclone separators, and other equipment create mechanical and fluid shear stress, removing contaminated silts and clays from granular soil particles.

Different separation processes create the following four output streams: (1) coarse clean fraction; (2) enriched fine fraction; (3) separated contaminated humic materials; and (4) process wash water. The coarse clean fraction particles, which measure greater than 45 μm (greater than 325 mesh) each, can be used as backfill or recycled for concrete, masonry, or asphalt sand application. The enriched fine fraction particles, measuring less than 45 μm each are prepared for subsequent treatment, immobilization, destruction, or regulated disposal. Separated contaminated humic materials (leaves, twigs, roots, grasses, wood chips) are dewatered and require subsequent treatment or disposal. Upflow classification and

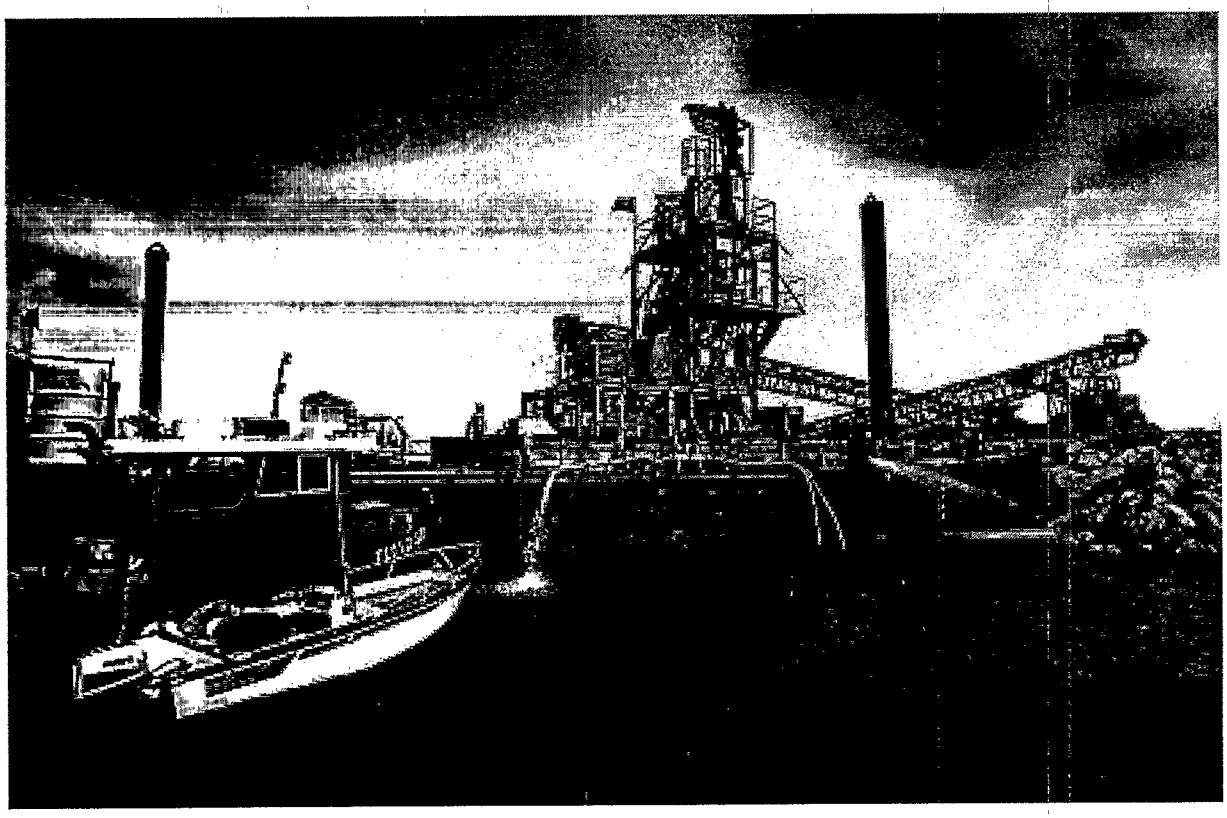

Bergmann Soil and Sediment Washing

The SITE Program assesses but does not approve or endorse technologies.

separation, also known as elutriation, separates light contaminated materials such as leaves, twigs, roots, or wood chips. The process wash water is treated by flocculation and sedimentation, oil-water separation, or dissolved air flotation to remove solubilized heavy metal and emulsified organic fractions. The treated process wash water is then returned to the plant for reuse.

WASTE APPLICABILITY:

This technology is suitable for treating soils and sediment contaminated with organics, including polychlorinated biphenyls (PCB), creosote, fuel residues, and heavy petroleum; and heavy metals, including cadmium, chromium, lead, arsenic, copper, cyanides, mercury, nickel, radionuclides, and zinc.

STATUS:

This technology was accepted into the SITE Demonstration Program in Winter 1991. It was demonstrated in Toronto, Ontario, Canada in April 1992 as part of the Toronto Harbour Commission (THC) soil recycling process. For further information on the THC process, including demonstration results, refer to the THC profile in the Demonstration Program section (completed projects). The technology was also demonstrated in May 1992 at the Saginaw Bay Confined Disposal Facility in Saginaw, Michigan. The Applications Analysis Report (EPA/540/AR-92/075) and the Demonstration Bulletin (EPA/540/MR-92/075) are available from EPA. Since 1981, Bergmann has provided 31 commercial systems, treating up to 350 tons per hour, at contaminated waste sites.

DEMONSTRATION RESULTS:

Demonstration results indicate that the soil and sediment washing system can effectively isolate and concentrate PCB contamination into the organic fractions and the fines. Levels of metals contamination were also beneficially altered from the feed stream to the output streams. The effectiveness of the soil and sediment washing system on the inorganic compounds met or exceeded its performance for PCB contamination. During a 5-day test in May 1992, the Bergmann soil and sediment washing system experienced no downtime as it operated for 8 hours per day to treat dredged sediments from the Saginaw River.

The demonstration provided the following results:

- Approximately 71 percent of the particles smaller than 45-μm in the input sediment was apportioned to the enriched fine stream.
- Less than 20 percent of the particles smaller than 45-μm in the input sediment was apportioned to the coarse clean fraction.
- The distribution of the concentrations of PCBs in the input and output streams were as follows:
  Input sediment = 1.6 milligrams per kilogram (mg/kg)
  Output coarse clean fraction = 0.20 mg/kg
  Output humic materials = 11 mg/kg
  Output enriched fines = 4.4 mg/kg
- The heavy metals were concentrated in the same manner as the PCBs.
- The coarse clean sand consisted of approximately 82 percent of the input sediment.

FOR FURTHER INFORMATION:

EPA PROJECT MANAGER:
Jack Hubbard, U.S. EPA
National Risk Management Research Laboratory
26 West Martin Luther King Drive
Cincinnati, OH 45268
513-569-7507 Fax: 513-569-7620

TECHNOLOGY DEVELOPER CONTACT:
George Jones
Bergmann, A Division of Linatex, Inc.
1550 Airport Road
Gallatin, TN 37066-3739
615-230-2217 Fax: 615-452-5525

The SITE Program assesses but does not approve or endorse technologies.

BERKELEY ENVIRONMENTAL RESTORATION CENTER
(In Situ Steam Enhanced Extraction Process)

TECHNOLOGY DESCRIPTION:

The in situ steam enhanced extraction (ISEE) process removes volatile organic compounds (VOC) and semivolatile organic compounds (SVOC) from contaminated water and soils above and below the water table (see figure below). Pressurized steam is introduced through injection wells to force steam through the soil to thermally enhance the vapor and liquid extraction processes.

The extraction wells have two purposes: (1) to pump groundwater for ex situ treatment; and (2) to transport steam and vaporized contaminants under vacuum to the surface. Recovered contaminants are condensed and recycled, processed with the contaminated groundwater, or treated in the gas phase. The ISEE process uses readily available components such as injection, extraction, and monitoring wells; manifold piping; vapor and liquid separators; vacuum pumps; and gas emission control equipment.

WASTE APPLICABILITY:

The ISEE process extracts VOCs and SVOCs from contaminated soils and groundwater. The primary compounds suitable for treatment include hydrocarbons such as gasoline, diesel, and jet fuel; solvents such as trichloroethene, 1,1,1-trichloroethane, and dichlorobenzene; or a mixture of these compounds. The process may be applied to contaminants above or below the water table. After treatment is complete, subsurface conditions are amenable to biodegradation of residual contaminants, if necessary. The process can be applied to contaminated soil very near the surface with a cap. Compounds denser than water may be treated only in low concentrations, unless a barrier exists or can be created to prevent downward percolation of a separate phase.

STATUS:

In August 1988, a successful pilot-scale demonstration of the ISEE process was completed at a site contaminated with a mixture of solvents. Contaminants amounting to 764 pounds were removed from the 10-foot-diameter, 12-foot-deep test region. After 5 days of steam injection, soil contaminant concentrations dropped by a factor of 10.

In December 1993, a full-scale demonstration was completed at a gasoline spill site at Lawrence Livermore National Laboratory (LLNL) in

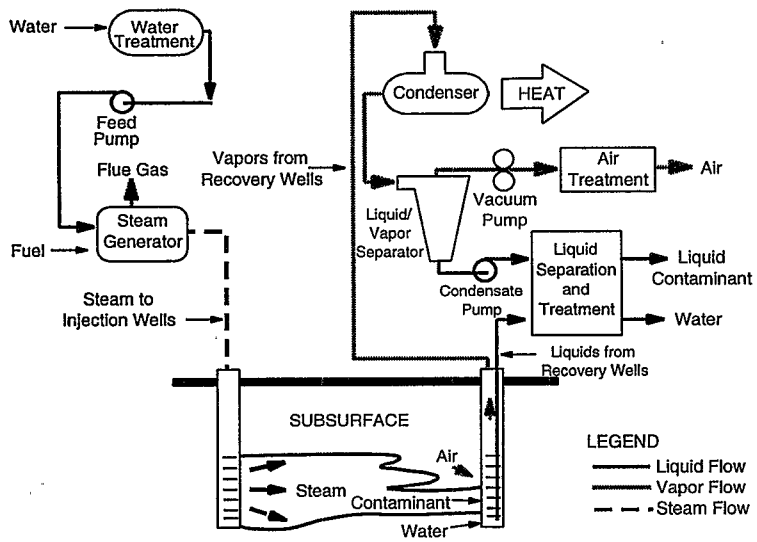

In Situ Steam Enhanced Extraction Process

The SITE Program assesses but does not approve or endorse technologies.

Altamont Hills, California. Gasoline was dispersed both above and below the water table due to a 25-foot rise in the water table since the spill occurred. The lateral distribution of liquid-phase gasoline was within a region 150 feet in diameter and up to 125 feet deep. Appendix A of the Hughes Environmental Systems Innovative Technology Evaluation Report (EPA/540/R-94/510) contains detailed results from the LLNL SITE demonstration. This report is available from EPA.

A pilot-scale test of the ISEE process was conducted in 1994 at Naval Air Station (NAS) Lemoore in California. During 3 months of operation, over 98,000 gallons of JP-5 jet fuel was recovered from medium permeability, partially saturated sand to a depth of 20 feet. Preliminary soil sampling showed reductions of JP-5 jet fuel concentrations from several thousand parts per million (ppm) above the water table to values less than 25 ppm.

During Fall 1998, Berkeley is scheduled to use the ISEE process to remediate a groundwater contaminant plume at Alameda Naval Air Station in California. The contaminant plume contains halogenated organic compounds, including trichlolorethene, 1,1,1-trichlorethane, and perchloroethylene.

For more information about similar technologies, see the following profiles in the Demonstration Program section: Hughes Environmental Systems, Inc., (completed projects) and Praxis Environmental Technologies, Inc. (ongoing projects).

DEMONSTRATION RESULTS:

During the SITE demonstration at LLNL, over 7,600 gallons of gasoline were recovered from above and below the water table in 26 weeks of operation. Recovery rates were about 50 times greater than those achieved by vacuum extraction and groundwater pumping alone. The rates were highest during cyclic steam injection, after subsurface soils reached steam temperatures. The majority of the recovered gasoline came from the condenser as a separate phase liquid or in the effluent air stream.

Without further pumping, 1,2-dichloroethene, benzene, ethylbenzene, toluene, and xylene concentrations in sampled groundwater were decreased to below maximum contaminant levels after 6 months. Post-process soil sampling indicated that a thriving hydrocarbon-degrading microbial population existed in soils experiencing prolonged steam contact.

FOR FURTHER INFORMATION:

EPA PROJECT MANAGER:
Paul dePercin
U.S. EPA
National Risk Management Research Laboratory
26 West Martin Luther King Drive
Cincinnati, OH 45268
513-569-7797
Fax: 513-569-7105
E-Mail: dePercin.Paul@epamail.epa.gov

TECHNOLOGY DEVELOPER CONTACTS:
Kent Udell
Berkeley Environmental Restoration Center
6147 Etcheverry Hall
Berkeley, CA 94720-1740
510-642-2928
Fax: 510-642-6163
Steve Collins
Berkeley Environmental Restoration Center
461 Evans Hall
Berkeley, CA 94720-1706
510-643-1900
Fax: 510-643-2076

The SITE Program assesses but does not approve or endorse technologies.

BILLINGS AND ASSOCIATES, INC.
(Subsurface Volatilization and Ventilation System [SVVS®])

TECHNOLOGY DESCRIPTION:

The Subsurface Volatilization and Ventilation System (SVVS®), developed by Billings and Associates, Inc. (BAI), and operated by several other firms under a licensing agreement, uses a network of injection and extraction wells (collectively called a reactor nest) to treat subsurface organic contamination through soil vacuum extraction combined with in situ biodegradation. Each system is designed to meet site-specific conditions. The SVVS® technology has three U.S. patents.

The SVVS® is shown in the figure below. A series of injection and extraction wells is installed at a site. One or more vacuum pumps create negative pressure to extract contaminant vapors, while an air compressor simultaneously creates positive pressure, sparging the subsurface treatment area. Control is maintained at a vapor control unit that houses pumps, control valves, gauges, and other process control hardware.

At most sites with subsurface organic contamination, extraction wells are placed above the water table and injection wells are placed below the groundwater. This placement allows the groundwater to be used as a diffusion device.

The number and spacing of the wells depends on the modeling results of a design parameter matrix, as well as the physical, chemical, and biological characteristics of the site. The exact depth of the injection wells and screened intervals are additional design considerations.

To enhance vaporization, solar panels are occasionally used to heat the injected air. Additional valves for limiting or increasing air flow and pressure are placed on individual reactor nest lines (radials) or, at some sites, on individual well points. Depending on groundwater depths and fluctuations, horizontal vacuum screens, "stubbed" screens, or multiple-depth completions can be applied. Positive and negative air flow can be shifted to different locations at the site to

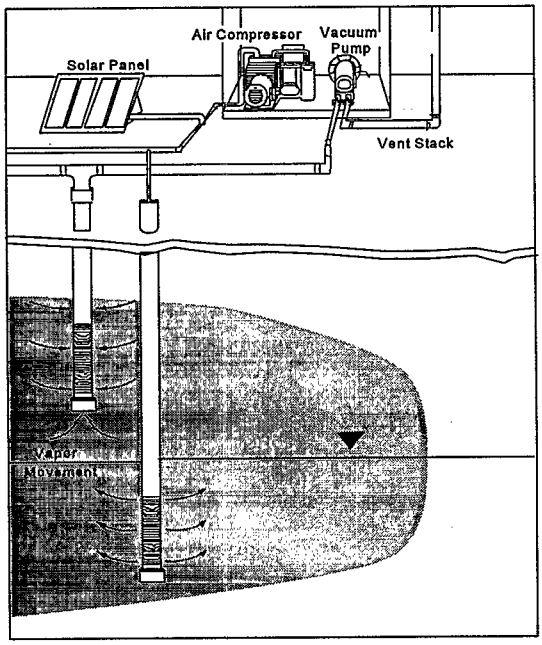

Subsurface Volatilization and Ventilation System (SVVS®)

The SITE Program assesses but does not approve or endorse technologies.

emphasize remediation on the most contaminated areas. Negative pressure is maintained at a suitable level to prevent escape of vapors.

Because it provides oxygen to the subsurface, the SVVS® can enhance in situ bioremediation at a site, thereby decreasing remediation time. These processes are normally monitored by measuring dissolved oxygen levels in the aquifer, recording carbon dioxide levels in transmission lines and at the emission point, and periodically sampling microbial populations. When required by air quality permits, volatile organic compound emissions can be treated by a patent-pending biological filter that uses indigenous microbes from the site.

WASTE APPLICABILITY:

The SVVS® is applicable to soils, sludges, and groundwater contaminated with gasoline, diesel fuels, and other hydrocarbons, including halogenated compounds. The technology is effective on benzene, toluene, ethylbenzene, and xylene contamination. It can also contain contaminant plumes through its unique vacuum and air injection techniques.

STATUS:

This technology was accepted into the SITE Demonstration Program in winter 1991. A site in Buchanan, Michigan was selected for the demonstration, and initial drilling and construction began in July 1992. The demonstration began in March 1993 and was completed in May 1994. The Demonstration Bulletin (EPA/540/MR-94/529), Technology Capsule (EPA/540/R-94/529a), and Innovative Technology Evaluation Report (EPA/540/R-94/529) are available from EPA. The SVVS® has also been implemented at 95 underground storage tank sites in New Mexico, North Carolina, South Carolina, Florida, and Oklahoma.

BAI is researching ways to increase the microbiological effectiveness of the technology and is testing a mobile unit. The mobile unit will allow rapid field pilot tests to support the design process. This unit will also permit actual remediation of small sites and of small, recalcitrant areas on large sites.

DEMONSTRATION RESULTS:

Results from the SVVS® demonstration are as follows:

- Data indicated that the overall reductions for several target analytes, as determined from individual boreholes, ranged from 71 percent to over 99 percent, over a 1-year period.
- The early phase of the remediation was characterized by higher concentrations of volatile organics in the extracted vapor stream.
- The shutdown tests indicate that the technology stimulated biodegradative processes at the site.

FOR FURTHER INFORMATION:

EPA PROJECT MANAGER:
Paul dePercin
U.S. EPA
National Risk Management Research Laboratory
26 West Martin Luther King Drive
Cincinnati, OH 45268
513-569-7797
Fax: 513-569-7105
E-Mail: dePercin.Paul@epamail.epa.gov

TECHNOLOGY DEVELOPER CONTACTS:
Gale Billings or Rick Billings
Billings and Associates, Inc.
6808 Academy Parkway E. N.E.
Suite A-4
Albuquerque, NM 87109
505-345-1116
Fax: 505-345-1756

The SITE Program assesses but does not approve or endorse technologies.

BIOGENESIS ENTERPRISES, INC.
(BioGenesis^{SM} Soil and Sediment Washing Process)

TECHNOLOGY DESCRIPTION:

The BioGenesis^{SM} soil and sediment washing process uses specialized, patent-pending equipment, complex surfactants, and water to clean soil, sediment, and sludge contaminated with organic and inorganic constituents. Two types of mobile equipment wash different sizes of particles. A truck-mounted batch unit processes 20 yards per hour, and washes soil particles 10 mesh and larger. A full-scale, mobile, continuous flow unit cleans sand, silt, clay, and sludge particles smaller than 10 mesh at a rate of 20 to 40 yards per hour. Auxiliary equipment includes tanks, dewatering and water treatment equipment, and a bioreactor. Extraction efficiencies per wash cycle range from 85 to 99 percent. High contaminant levels require multiple washes.

The principal components of the process consist of pretreatment equipment for particle sizing, a truck-mounted soil washer for larger particles, a sediment washing unit(s) for fine particles, and water treatment and reconditioning equipment. The BioGenesis^{SM} soil washing system for larger particles consists of a trailer-mounted gondola plumbed for air mixing, water and chemical addition, oil skimming, and liquid drainage (see figure below). Water, BioGenesis^{SM} cleaning chemicals, and soil are loaded into the gondola. Aeration nozzles feed compressed air to create a fluidized bed. The resulting slurry is agitated to release organic and inorganic contaminants from the soil particles. After mixing, a short settling period allows the soil particles to sink and the removed oil to rise to the water surface, where it is skimmed for reclamation or disposal. Following drainage of the wash water, the treated soil is evacuated by raising the gondola's dump mechanism. Processed soil contains a moisture level of 10 to 20 percent depending on the soil matrix.

A prototype BioGenesis^{SM} sediment washing machine was tested in Environment Canada's Contaminated Sediment Treatment Technology Program. The sediment washing machine is a continuous flow unit. Capacities of up to 80 to 100 cubic yards per hour are possible using full-scale, parallel processing equipment.

In the sediment washing machine, sediment is pretreated to form a slurry. The slurry passes to a shaker screen separator that sizes particles into two streams. Material greater than 1 millimeter (mm) in diameter is diverted to the large particlesoil washer. Material 1 mm and smaller continues to the sediment washer's feed hopper.

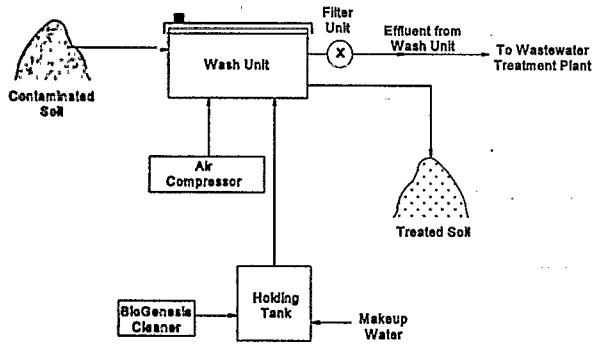

Soil Washing Process

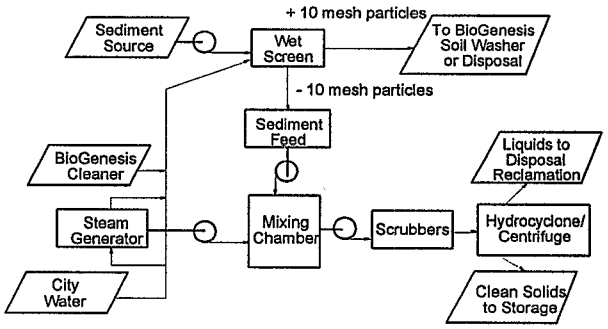

Sediment Washing Process

The SITE Program assesses but does not approve or endorse technologies.

From there, the slurry is injected to the sediment cleaning chamber to loosen the bonds between the pollutant and the particle.

After the cleaning chamber, the slurry flows to the scrubber to further weaken the bonds between contaminants and particles. After the scrubber, the slurry passes through a buffer tank, where large particles separate by gravity. The slurry then flows through hydrocyclone banks to separate solids down to 3 to 5 microns in size. The free liquid routes to a centrifuge for final solid-liquid separation. All solids go to the treated soil pile; all liquid is routed to wastewater treatment to remove organic and inorganic contaminants. Decontaminated wastewater is recycled back through the process. Equipment configuration varies depending on the soil matrix.

The BioGenesis™ cleaning chemical is a light alkaline mixture of ionic and nonionic surfactants and bioremediating agents that act similarly to a biosurfactant. The proprietary cleaner contains no hazardous ingredients.

WASTE APPLICABILITY:

This technology extracts many inorganics, volatile and nonvolatile hydrocarbons, chlorinated hydrocarbons, pesticides, polychlorinated biphenyls (PCB), polynuclear aromatic hydrocarbons, and most organics from nearly every soil and sediment type, including clay.

STATUS:

The BioGenesis℠ soil washing technology was accepted into the SITE Demonstration Program in June 1990. The process was demonstrated in November 1992 on weathered crude oil at a refinery site in Minnesota. Results from the demonstration have been published in the Innovative Technology Evaluation Report (EPA/540/R-93/510) and the SITE Technology Capsule (EPA/540/SR-93/510). The reports are available from EPA. BioGenesis Enterprises, Inc., is planning a future demonstration of the BioGenesis℠ sediment washing process using PCB-contaminated sediment.

DEMONSTRATION RESULTS:

Results of the SITE demonstration are presented below:

- Soil washing and biodegradation with BioGenesis℠ removed about 85 percent of the total recoverable petroleum hydrocarbon (TRPH)-related contaminants in the soil.
- Treatment system performance was reproducible at constant operating conditions.
- At the end of 90 days, TRPH concentrations decreased an additional 50 percent compared to washing alone.
- The prototype equipment operated within design parameters. New production equipment is expected to streamline overall operating efficiency.

FOR FURTHER INFORMATION:

EPA PROJECT MANAGER:
Annette Gatchett
U.S. EPA
National Risk Management Research Laboratory
26 West Martin Luther King Drive
Cincinnati, OH 45268
513-569-7697
Fax: 513-569-7620

TECHNOLOGY DEVELOPER CONTACT:
Charles Wilde
BioGenesis Enterprises, Inc.
7420 Alban Station Boulevard, Suite B 208
Springfield, VA 22150
703-913-9700
Fax: 703-913-9704

The SITE Program assesses but does not approve or endorse technologies.

BIO-REM, INC.
(Augmented In Situ Subsurface Bioremediation Process)

TECHNOLOGY DESCRIPTION:

The Bio-Rem, Inc., Augmented In Situ Subsurface Bioremediation Process uses a proprietary blend (H-10) of microaerophilic bacteria and micronutrients for subsurface bioremediation of hydrocarbon contamination in soil and water (see figure below). The insertion methodology is adaptable to site-specific situations. The bacteria are hardy and can treat contaminants in a wide temperature range. The process does not require additional oxygen or oxygen-producing compounds, such as hydrogen peroxide. Degradation products include carbon dioxide and water.

The bioremediation process consists of four steps: (1) defining and characterizing the contaminationplume; (2) selecting a site-specific application methodology; (3) initiating and propagating the bacterial culture; and (4) monitoring and reporting cleanup.

This technology treats soil and water contaminated with hydrocarbons, including halogenated hydrocarbons. Use of the augmented bioremediation process is site-specific, and therefore engineered for each individual site. The success of the process is dependent on a complete and accurate site characterization study. This data is necessary to determine the treatment magnitude and duration.

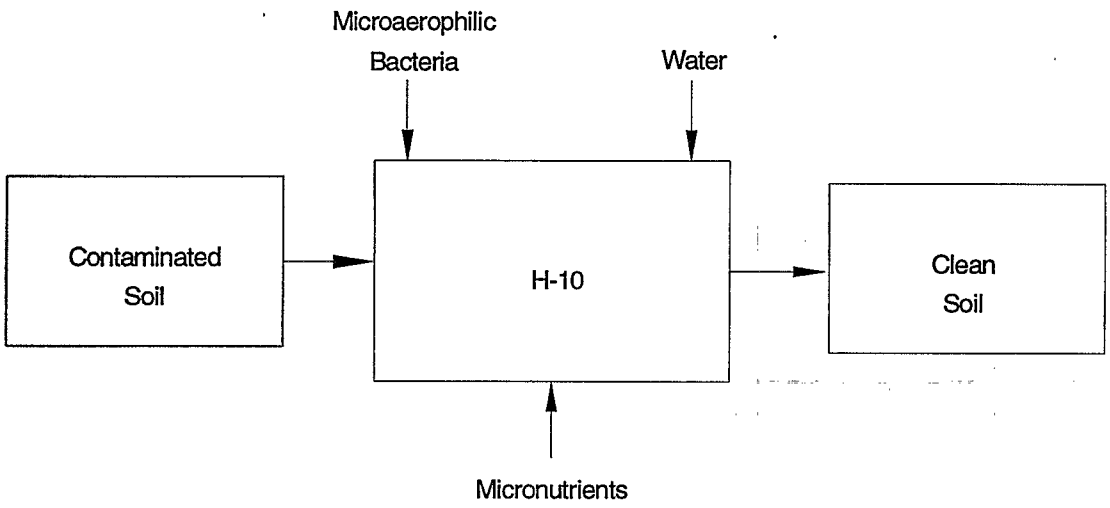

Augmented In Situ Subsurface Bioremediation Process

The SITE Program assesses but does not approve or endorse technologies.

STATUS:

This technology was accepted into the SITE Demonstration Program in winter 1991. The technology was successfully demonstrated at Williams Air Force Base in Phoenix, Arizona from May 1992 through June 1993. The Demonstration Bulletin (EPA/540/MR-93/527) is available from EPA. Bio-Rem, Inc., has remediated sites throughout the U.S., and in Canada and Central Europe.

FOR FURTHER INFORMATION:

EPA PROJECT MANAGER:
Teri Richardson
U.S. EPA
National Risk Management Research Laboratory
26 West Martin Luther King Drive
Cincinnati, OH 45268
513-569-7949
Fax: 513-569-7105

TECHNOLOGY DEVELOPER CONTACT:
David Mann
Bio-Rem, Inc.
P.O. Box 116
Butler, IN 46721
219-868-5823
800-428-4626
Fax: 219-868-5851

The SITE Program assesses but does not approve or endorse technologies.

BIOTHERM, LCC
(formerly Dehydro-Tech Corporation)
(Biotherm Process™)

TECHNOLOGY DESCRIPTION:

The Biotherm Process™ combines dehydration and solvent extraction technologies to separate wet, oily wastes into their constituent solid, water, and oil phases (see figure below).

Waste is first mixed with a low-cost hydrocarbon solvent. The resultant slurry mixture is fed to an evaporator system that vaporizes water and initiates solvent extraction of the indigenous oil extraction unit, where solids contact recycled solvent until the target amount of indigenous oil is removed. Depending on the water content of the feed, single-effect or energy-saving multi-effect evaporators may be used. Next, the slurry of dried solids is treated in a multistage solvent. Finally, solids are centrifuged away from the solvent, followed by "desolventizing," an operation that evaporates residual solvent. The final solids product typically contains less than 2 percent water and less than 1 percent solvent. The spent solvent, which contains the extracted indigenous oil, is distilled to separate the solvent for reuse, and the oil for recovery or disposal.

The Biotherm Process™ yields (1) a clean, dry solid; (2) a water product virtually free of solids, indigenous oil, and solvent; and (3) the extracted indigenous oil, which contains the hazardous hydrocarbon-soluble feed components.

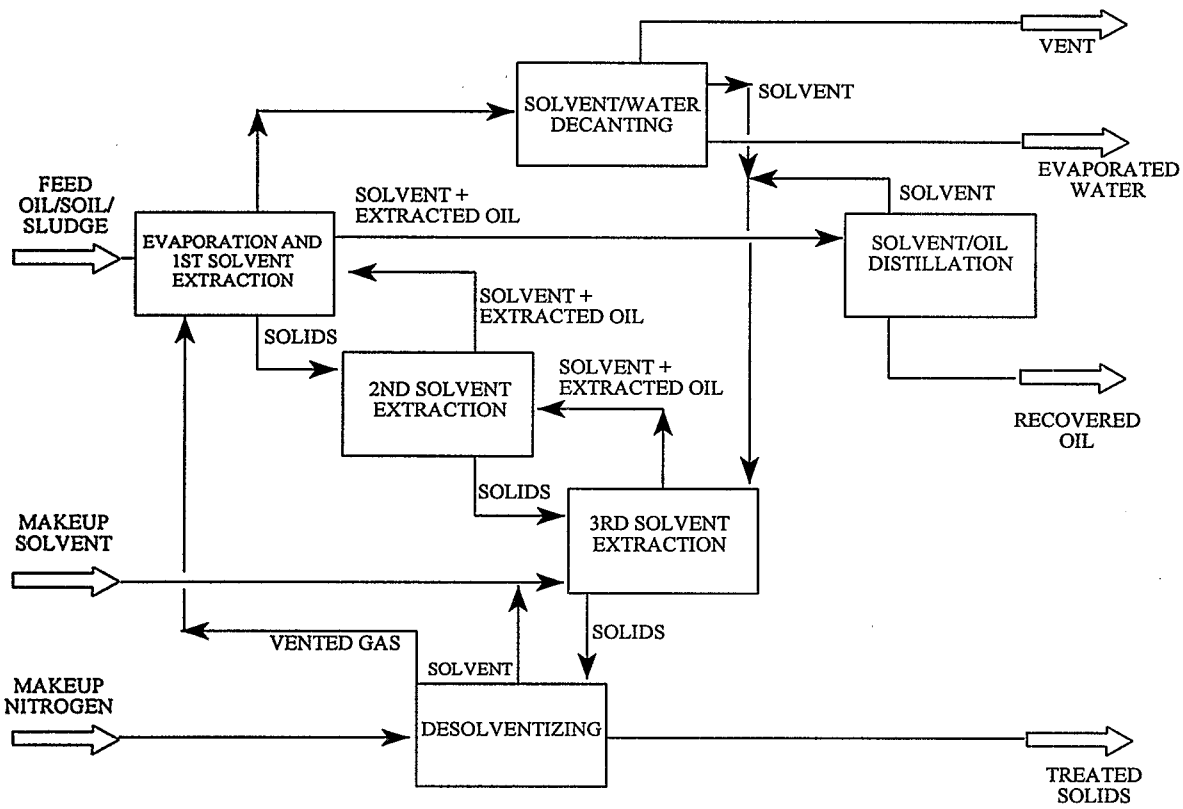

Biotherm Process™ Schematic Diagram

The SITE Program assesses but does not approve or endorse technologies.

The Biotherm Process™ combination of dehydration and solvent extraction has the following advantages: (1) any emulsions initially present are broken and potential emulsion formation is prevented; (2) solvent extraction is more efficient because water is not present; and (3) the dry solids product is stabilized more readily if required (for example, if metals contamination is a concern).

WASTE APPLICABILITY:

The Biotherm Process™ can treat sludges, soils, sediments, and other water-bearing wastes containing hydrocarbon-soluble hazardous compounds, including polychlorinated biphenyls, polynuclear aromatic hydrocarbons, and dioxins. The process has been commercially applied to municipal wastewater sludge, paper mill sludge, rendering waste, pharmaceutical plant sludge, and other wastes.

STATUS:

The Biotherm Process™ was accepted into the SITE Demonstration Program in 1990. The pilot-scale SITE demonstration of this technology was completed in August 1991 at EPA's research facility in Edison, New Jersey. Spent petroleum drilling fluids from the PAB oil site in Abbeville, Louisiana, were used as process feed. The Applications Analysis Report (EPA/540/AR-92/002), Technology Demonstration Summary (EPA/540/SR-92/002), and Technology Evaluation Report (EPA/540/R-92/002) are available from EPA.

DEMONSTRATION RESULTS:

The SITE demonstration of the Biotherm Process™ yielded the following results:

- The process successfully separated the petroleum-contaminated sludge into its solid, indigenous oil, and water phases. No detectable levels of indigenous total petroleum hydrocarbons were present in the final solid product.
- The final solid product was a dry powder similar to bentonite. A food-grade solvent comprised the bulk of the residual hydrocarbons in the solid.
- Values for all metals and organics were well below the Resource Conservation and Recovery Act toxicity characteristic leaching procedure limits for characteristic hazardous wastes.
- The resulting water product required treatment due to the presence of small amounts of light organics and solvent. Normally, it may be disposed of at a local publicly owned treatment works.
- A full-scale Biotherm Process™ can treat drilling fluid wastes at technology-specific costs of $100 to $220 per ton of wet feed, exclusive of disposal costs for the residuals. Site-specific costs, which include the cost of residual disposal, depend on site characteristics and treatment objectives.

FOR FURTHER INFORMATION:

EPA PROJECT MANAGER:
Laurel Staley
U.S. EPA
National Risk Management Research Laboratory
26 West Martin Luther King Drive
Cincinnati, OH 45268
513-569-7863
Fax: 513-569-7105

TECHNOLOGY DEVELOPER CONTACT:
Theodore Trowbridge
Biotherm, LCC
401 Towne Center Drive
Hillsborough Township
Somerville, NJ 08876
908-904-1606
Fax: 908-904-1561

The SITE Program assesses but does not approve or endorse technologies.

BIOTROL®
(Biological Aqueous Treatment System)

TECHNOLOGY DESCRIPTION:

The BioTrol biological aqueous treatment system (BATS) is a patented biological system that treats contaminated groundwater and process water. The system uses naturally occurring microbes; in some instances, however, a specific microorganism may be added. This technique, known as microbial amendment, is important if a highly toxic or recalcitrant target compound is present. The amended microbial system removes both the target contaminant and the background organic carbon.

The figure below is a schematic of the BATS. Contaminated water enters a mix tank, where the pH is adjusted and inorganic nutrients are added. If necessary, the water is heated to an optimum temperature with a heater and a heat exchanger, to minimize energy costs. The water then flows to the bioreactor, where the contaminants are biodegraded.

The microorganisms that degrade the contaminants are immobilized in a multiple-cell, submerged, fixed-film bioreactor. Each cell is filled with a highly porous packing material to which the microbes adhere. For aerobic conditions, air is supplied by fine bubble membrane diffusers mounted at the bottom of each cell. The system may also run under anaerobic conditions.

As water flows through the bioreactor, the contaminants are degraded to biological end-products, predominantly carbon dioxide and water. The resulting effluent may be discharged to a publicly owned treatment works or reused on site. In some cases, discharge with a National Pollutant Discharge Elimination System permit may be possible.

WASTE APPLICABILITY:

The BATS may be applied to a wide variety of wastewaters, including groundwater, lagoons, and

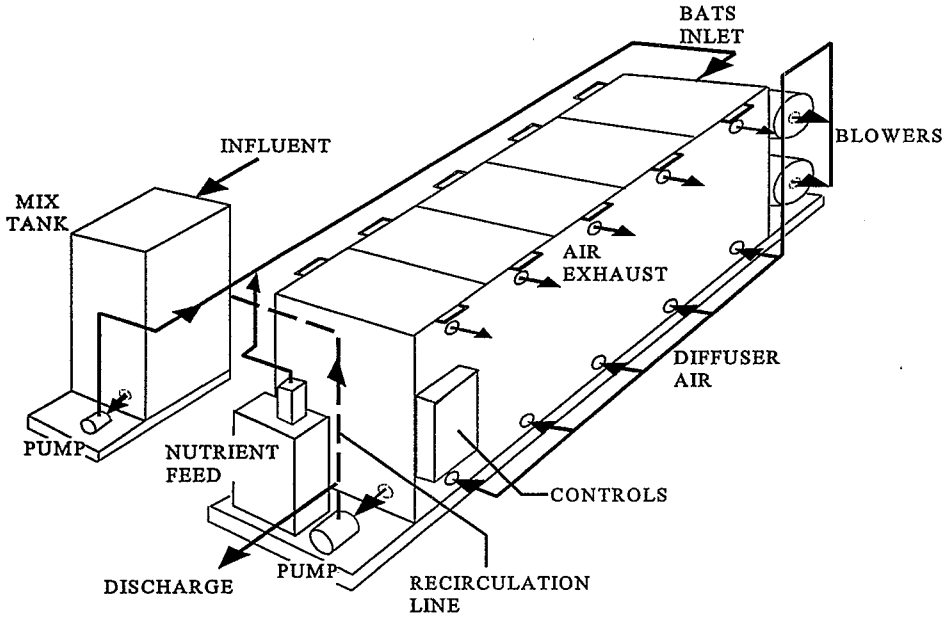

BioTrol Biological Aqueous Treatment System (BATS)

The SITE Program assesses but does not approve or endorse technologies.

process water. Contaminants amenable to treatment include pentachlorophenol (PCP), creosote components, gasoline and fuel oil components, chlorinated hydrocarbons, phenolics, and solvents. Other potential target waste streams include coal tar residues and organic pesticides. The BATS may also be effective for treating certain inorganic compounds such as nitrates; however, this application has not yet been demonstrated. The system does not treat metals.

STATUS:

The BATS was accepted into the SITE Demonstration Program in 1989. The system was demonstrated under the SITE Program from July to September 1989 at the MacGillis and Gibbs Superfund site in New Brighton, Minnesota. The system operated continuously for 6 weeks at three different flow rates. The Applications Analysis Report (EPA/540/A5-91/001), the Technology Evaluation Report (EPA/540/5-91/001), and the Demonstration Bulletin (EPA/540/M5-91/001) are available from EPA.

During 1986 and 1987, BioTrol performed a successful 9-month pilot-scale field test of the BATS at a wood preserving facility. Since that time, the firm has installed more than 20 full-scale systems and has performed several pilot-scale demonstrations. These systems have successfully treated waters contaminated with gasoline, mineral spirit solvents, phenol, and creosote.

DEMONSTRATION RESULTS:

For the SITE demonstration, the BATS yielded the following results:

- Reduced PCP concentrations from about 45 parts per million (ppm) to 1 ppm or less in a single pass
- Produced minimal sludge and no PCP air emissions
- Mineralized chlorinated phenolics
- Eliminated groundwater biotoxicity
- Appeared to be unaffected by low concentrations of oil and grease (about 50 ppm) and heavy metals in groundwater
- Required minimal operator attention

The treatment cost per 1,000 gallons was $3.45 for a 5-gallon-per-minute (gpm) pilot-scale system and $2.43 for a 30-gpm system.

FOR FURTHER INFORMATION:

TECHNOLOGY DEVELOPER CONTACT:
Durell Dobbins
BioTrol
10300 Valley View Road, Suite 107
Eden Prairie, MN 55344-3456
612-942-8032
Fax: 612-942-8526

The SITE Program assesses but does not approve or endorse technologies.

BIOTROL®
(Soil Washing System)

TECHNOLOGY DESCRIPTION:

The BioTrol Soil Washing System is a patented, water-based volume reduction process used to treat excavated soil. The system may be applied to contaminants concentrated in the fine-sized soil fraction (silt, clay, and soil organic matter) or in the coarse soil fraction (sand and gravel).

In the first part of the process, debris is removed from the soil. The soil is then mixed with water and subjected to various unit operations common to the mineral processing industry (see figure below). The equipment used in these operations can include mixing trommels, pug mills, vibrating screens, froth flotation cells, attrition scrubbing machines, hydrocyclones, screw classifiers, and various dewatering apparatus.

The core of the process is a multistage, counter-current, intensive scrubbing circuit with interstage classification. The scrubbing action disintegrates soil aggregates, freeing contaminated fine particles from the coarser material. In addition, surficial contamination is removed from the coarse fraction by the abrasive scouring action of the particles themselves. Contaminants may also be solubilized, as dictated by solubility characteristics or partition coefficients.

Contaminated residual products can be treated by other methods. Process water is normally recycled after biological or physical treatment. Contaminated fines may be disposed of off site, incinerated, stabilized, or biologically treated.

WASTE APPLICABILITY:

This system was initially developed to clean soils contaminated with wood preserving wastes, such as polynuclear aromatic hydrocarbons (PAH) and pentachlorophenol (PCP). The system may also apply to soils contaminated with petroleum hydrocarbons, pesticides, polychlorinated biphenyls, various industrial chemicals, and metals.

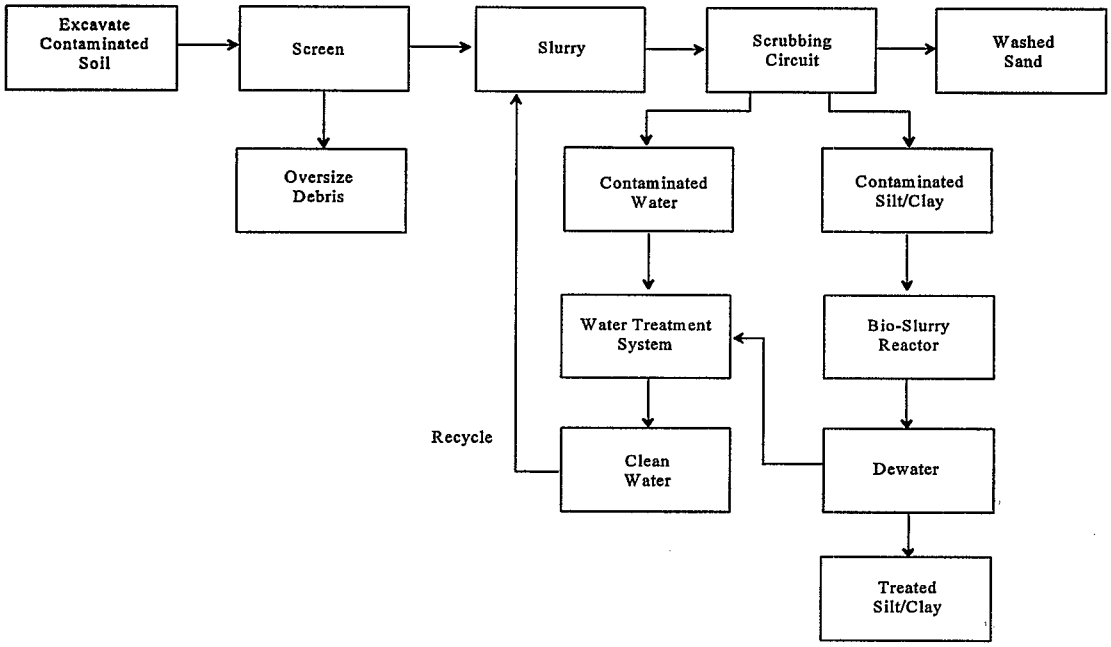

BioTrol Soil Washing System Process Diagram

The SITE Program assesses but does not approve or endorse technologies.

STATUS:

The BioTrol Soil Washing System was accepted into the SITE Demonstration Program in 1989. The system was demonstrated under the SITE Program between September and October 1989 at the MacGillis and Gibbs Superfund site in New Brighton, Minnesota. A pilot-scale unit with a treatment capacity of 500 pounds per hour operated 24 hours per day during the demonstration. Feed for the first phase of the demonstration (2 days) consisted of soil contaminated with 130 parts per million (ppm) PCP and 247 ppm total PAHs; feed for the second phase (7 days) consisted of soil containing 680 ppm PCP and 404 ppm total PAHs.

Contaminated process water was treated biologically in a fixed-film reactor and recycled. A portion of the contaminated soil fines was treated biologically in a three-stage, pilot-scale EIMCO Biolift™ reactor system supplied by the EIMCO Process Equipment Company. The Applications Analysis Report (EPA/540/A5-91/003) and the Technology Evaluation Report Volume I (EPA/540/5-91/003a) and Volume II (EPA/540/5-91/003b and EPA/540/5-91/003c) are available from EPA.

DEMONSTRATION RESULTS:

Key findings from the BioTrol demonstration are summarized below:

- Feed soil (dry weight basis) was successfully separated into 83 percent washed soil, 10 percent woody residues, and 7 percent fines. The washed soil retained about 10 percent of the feed soil contamination; 90 percent of this contamination was contained within the woody residues, fines, and process wastes.
- The multistage scrubbing circuit removed up to 89 percent PCP and 88 percent total PAHs, based on the difference between concentration levels in the contaminated (wet) feed soil and the washed soil.
- The scrubbing circuit degraded up to 94 percent PCP in the process water during soil washing. PAH removal could not be determined because of low influent concentrations.
- The cost of a commercial-scale soil washing system, assuming use of all three technologies (soil washing, water treatment, and fines treatment), was estimated to be $168 per ton. Incineration of woody material accounts for 76 percent of the cost.

FOR FURTHER INFORMATION:

TECHNOLOGY DEVELOPER CONTACT:
Dennis Chilcote
BioTrol
10300 Valley View Road, Suite 107
Eden Prairie, MN 55344-3456
612-942-8032
Fax: 612-942-8526

The SITE Program assesses but does not approve or endorse technologies.

BRICE ENVIRONMENTAL SERVICES CORPORATION
(Soil Washing Process)

TECHNOLOGY DESCRIPTION:

Brice Environmental Services Corporation (Brice) developed a soil washing process that removes particulate metal contamination from soil. The process has been successfully coupled with acid leaching processes developed by Brice and others for the removal of ionic metal salts and metal coatings from soil. The Brice soil washing process is modular and uses components specifically suited to site soil conditions and cleanup standards. Component requirements and anticipated cleanup levels attainable with the process are determined during treatability testing at Brice's Fairbanks, Alaska facility laboratory. The process is designed to recirculate wash water and leachate solutions.

Particulate metal contaminants removed from soil, and metals recovered from the leaching system (if used), are recycled at a smelting facility. Instead of stabilizing the metals in place or placing the materials in a landfill, the Brice technology removes metal contaminants from the soil, thereby eliminating the health hazard associated with heavy metal contamination.

WASTE APPLICABILITY:

The Brice soil washing process treats soils contaminated with heavy metals. Typical materials suited for treatment with the technology include soils at small arm ranges, ammunition

Brice soil Washing Plant

The SITE Program assesses but does not approve or endorse technologies.

manufacturing and testing facilities, foundry sites, and sites used for lead-acid battery recycling.

STATUS:

The Brice soil washing process was accepted into the SITE Demonstration Program in winter 1991. Under the program, the technology was demonstrated in late summer 1992 on lead-contaminated soil at the Alaskan Battery Enterprises (ABE) Superfund site in Fairbanks, Alaska. The Demonstration Bulletin (EPA/540/MR-93/503) and the Applications Analysis Report (EPA/540/A5-93/503) are available from EPA.

A Brice soil washing plant was operated in New Brighton, Minnesota for 9 months at Twin Cities Army Ammunition Plant (TCAAP - see photograph) to process 20,000 tons of contaminated soil. The wash plant was used in conjunction with a leaching plant (operated by a separate developer) that removed ionic lead following particulate metal removal.

During Fall 1996, Brice performed a soil washing/soil leaching technology demonstration at a small arms range at Fort Polk, Louisiana. The process implemented physical separation of bullet and bullet fragments from soil particles, and included a leaching step for removing residual ionic lead. A total of 835 tons of soil were processed during this demonstration, and all demonstration goals were met with no soil requiring reprocessing.

In August 1998, Brice completed a full-scale soil washing operation at the Marine Corps Air Ground Combat Cebter in Twentynin Plams, California. This operation involved processing about 12,000 tons of soil at a small arms firing range.

Several successful demonstrations of the pilot-scale unit have been conducted. The results from the SITE demonstration have been published in a Technology Evaluation Report (EPA/540/5-91/006a), entitled "Design and Development of a Pilot-Scale Debris Decontamination System" and in a Technology Demonstration Summary (EPA/540/S5-91/006).

EPA developed a full-scale unit with ancillary equipment mounted on three 48-foot flatbed semi-trailers. EPA is expecting to formalize a nonexclusive licensing agreement for the equipment in late 1998 to increase the technology's use in treating contaminated debris.

DEMONSTRATION RESULTS:

The demonstration at the ABE site consisted of three test runs of five hours each, with 48 tons of soil processed. Feed soils averaged 4,500 milligrams per kilogram (mg/kg) and the separated soil fines fraction averaged 13,00 mg/kg. On-line reliability was 92 percent, and all processed gravel passed TCLP testing. Battery casing removal efficiencies during the three runs were 94 percent, 100 percent and 90 percent.

The results for the demonstration at the TCAAP site indicated that the Brice technology reduced the lead load to the leaching process from 39 percent to 53 percent. Soil was continuously processed at a rate of 12 to 15 tons per hour.

Results of the Fort Polk demonstration indicate that the technology reduced lead from firing range soils by 97 percent. All soil processed was below the demonstration goals of 500 mg/kg total lead and 5 milligrams per liter (mg/L) TCLP lead. Average results for all processed soil were 156 mg/kg total lead and 2.1 mg/L TCLP lead. Processing rates ranged from 6 to 12 tons per our hour.

FOR FURTHER INFORMATION:

TECHNOLOGY DEVELOPER CONTACT:
Craig Jones
Brice Environmental Services Corporation
3200 Shell Street
P.O. Box 73520
Fairbanks, AK 99707
907-456-1955
Fax: 907-452-5018

The SITE Program assesses but does not approve or endorse technologies.

BWX TECHNOLOGIES, INC.
(an affiliate of BABCOCK & WILCOX CO.)
(Cyclone Furnace)

TECHNOLOGY DESCRIPTION:

The Babcock & Wilcox Co. (Babcock & Wilcox) cyclone furnace is designed to combust coal with high inorganic content (high-ash). Through cofiring, the cyclone furnace can also accommodate highly contaminated wastes containing heavy metals and organics in soil or sludge. High heat-release rates of 45,000 British thermal units (Btu) per cubic foot of coal and high turbulence in cyclones ensures the high temperatures required for melting the high-ash fuels and combusting the organics. The inert ash exits the cyclone furnace as a vitrified slag.

The pilot-scale cyclone furnace, shown in the figure below, is a water cooled, scaled-down version of a commercial coal-fired cyclone with a restricted exit (throat). The furnace geometry is a horizontal cylinder (barrel).

Natural gas and preheated combustion air are heated to 820 °F and enter tangentially into the cyclone burner. For dry soil processing, the soil matrix and natural gas enter tangentially along the cyclone furnace barrel. For wet soil processing, an atomizer uses compressed air to spray the soil slurry directly into the furnace. The soil or sludge and inorganics are captured and melted, and organics are destroyed in the gas phase or in the molten slag layer. This slag layer is formed and retained on the furnace barrel wall by centrifugal action.

The soil melts, exits the cyclone furnace from the tap at the cyclone throat, and drops into a water-filled slag tank where it solidifies. A small quantity of soil also exits as fly ash with the flue gas from the furnace and is collected in a baghouse. In principle, this fly ash can be recycled to the furnace to increase metal capture and to minimize the volume of the potentially hazardous waste stream.

The energy requirements for vitrification are 15,000 Btu per pound of soil treated. The cyclone

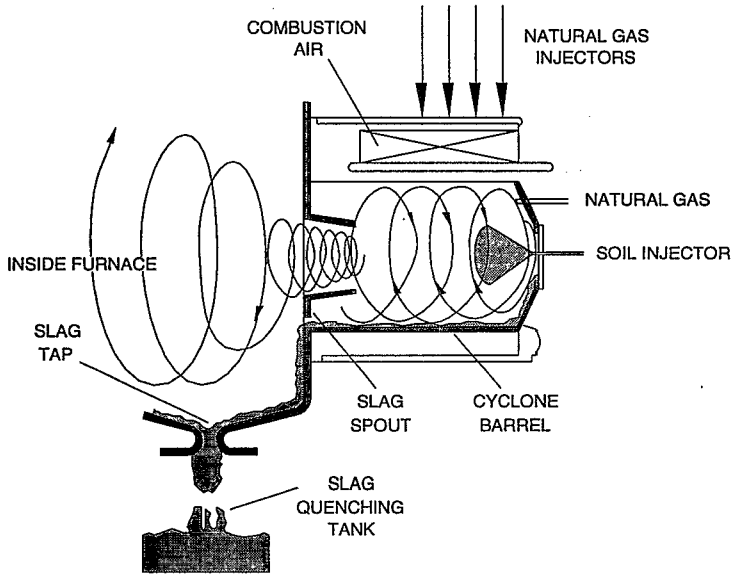

Cyclone Furnace

The SITE Program assesses but does not approve or endorse technologies.

furnace can be operated with gas, oil, or coal as the supplemental fuel. If the waste is high in organic content, it may also supply a significant portion of the required fuel heat input.

Particulates are captured by a baghouse. To maximize the capture of particulate metals, a heat exchanger is used to cool the stack gases to approximately 200 °F before they enter the baghouse.

WASTE APPLICABILITY:

The cyclone furnace can treat highly contaminated hazardous wastes, sludges, and soils that contain heavy metals and organic constituents. The wastes may be solid, a soil slurry (wet soil), or liquids. To be treated in the cyclone furnace, the ash or solid matrix must melt (with or without additives) and flow at cyclone furnace temperatures (2,400 to 3,000 °F). Because the furnace captures heavy metals in the slag and renders them nonleachable, it is particularly suited to soils that contain lower-volatility radionuclides such as strontium and transuranics.

Based on results from the Emerging Technology Program, the cyclone furnace technology was accepted into the SITE Demonstration Program in August 1991. A demonstration occurred in November 1991 at the developer's facility in Alliance, Ohio. The process was demonstrated using an EPA-supplied, wet synthetic soil matrix (SSM) spiked with heavy metals (lead, cadmium, and chromium), organics (anthracene and dimethylphthalate), and simulated radionuclides (bismuth, strontium, and zirconium). Results from the demonstrations have been published in the Applications Analysis Report (EPA/520/AR-92/017) and Technology Evaluation Report, Volumes 1 and 2 (EPA/504/R-92/017A and EPA/540/R-92/017B); these documents are available from EPA.

DEMONSTRATION RESULTS:

Vitrified slag leachabilities for the heavy metals met EPA toxicity characteristic leaching procedure (TCLP) limits. TCLP leachabilities were 0.29 milligram per liter (mg/L) for lead, 0.12 mg/L for cadmium, and 0.30 mg/L for chromium. Almost 95 percent of the noncombustible SSM was incorporated into the slag. Greater than 75 percent of the chromium, 88 percent of the strontium, and 97 percent of the zirconium were captured in the slag. Dry weight volume was reduced 28 percent. Destruction and removal efficiencies for anthracene and dimethylphthalate were greater than 99.997 percent and 99.998 percent, respectively. Stack particulates were 0.001 grain per dry standard cubic foot (gr/dscf) at 7 percent oxygen, which was below the Resource Conservation Recovery Act limit of 0.08 gr/dscf effective until May 1993. Carbon monoxide and total hydrocarbons in the flue gas were 6.0 parts per million (ppm) and 8.3 ppm, respectively.

An independent cost analysis was performed as part of the SITE demonstration. The cost to remediate 20,000 tons of contaminated soil using a 3.3-ton-per-hour unit was estimated at $465 per ton if the unit is on line 80 percent of the time, and $529 per ton if the unit is on line 60 percent of the time.

FOR FURTHER INFORMATION:

EPA PROJECT MANAGER:
Laurel Staley
U.S. EPA
National Risk Management Research Laboratory
26 West Martin Luther King Drive
Cincinnati, OH 45268
513-569-7863 Fax: 513-569-7105

TECHNOLOGY DEVELOPER CONTACT:
Evans Reynolds
BWX Technologies, Inc., an affiliate of Babcock & Wilcox Co.
Mt. Athos Rd., Route 726
Lynchburg, VA 24506-0598
804-522-6723 Fax: 804-522-6650

The SITE Program assesses but does not approve or endorse technologies.

CALGON CARBON ADVANCED OXIDATION TECHNOLOGIES
(formerly VULCAN PEROXIDATION SYSTEMS, INC.)
(perox-pure™ Chemical Oxidation Technology)

TECHNOLOGY DESCRIPTION:

The **perox-pure™** treatment system is designed to destroy dissolved organic contaminants in groundwater or wastewater with an advanced chemical oxidation process that uses ultraviolet (UV) radiation and hydrogen peroxide.

In the process, proprietary high-powered, medium-pressure lamps emit high-energy UV radiation through a quartz sleeve into the contaminated water. Hydrogen peroxide is added to the contaminated water and is activated by the UV light to form oxidizing species called hydroxyl radicals:

$$H_2O_2 + UV \rightarrow 2(\cdot OH)$$

The hydroxyl radical then reacts with the dissolved contaminants, initiating a rapid cascade of oxidation reactions that ultimately fully oxidize (mineralize) the contaminants. The success of the process is based on the fact that the rate constants for the reaction of ·OH radicals with most organic pollutants are very high. The hydroxyl radical typically reacts a million to a billion times faster than chemical oxidants such as ozone and hydrogen peroxide. In addition, many organic contminants (e.g. PCE) undergo a change in their chemical structure by the direct absorption of UV light in the UV-C spectral range emitted by Calgon Carbon Corporation's proprietary medium-pressure UV lamps.

WASTE APPLICABILITY:

The **perox-pure™** technology treats groundwater and wastewater contaminated with chlorinated solvents, pesticides, polychlorinated biphenyls, phenolics, ethers, fuel hydrocarbons, and other organic compounds. It is effective on concentrations ranging from low parts per billion to several hundred parts per million (ppm). In certain instances, when used in conjunction with photocatalysts, it can be competitive for contaminated waters at concentrations of several

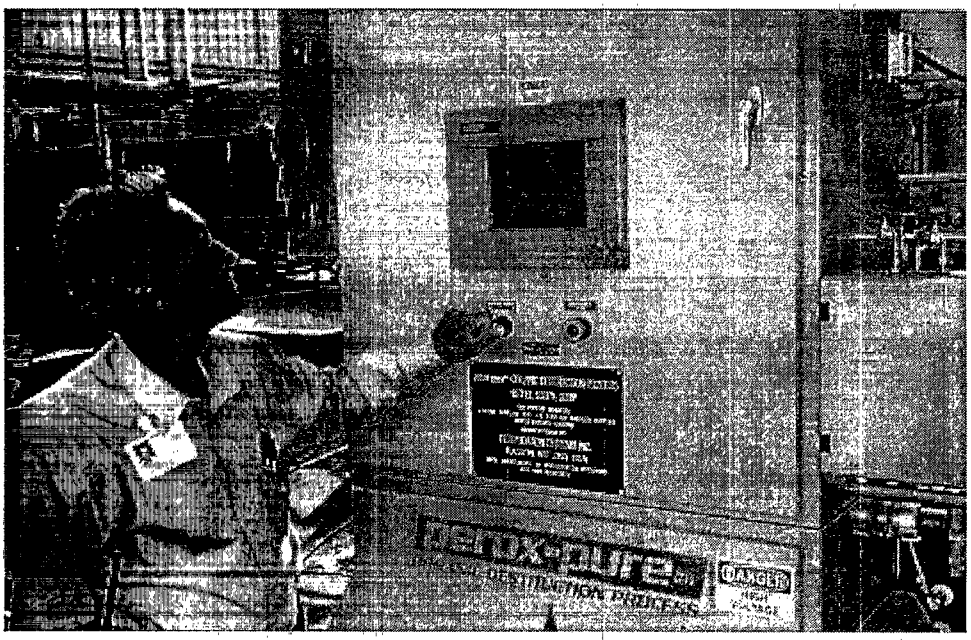

perox-pure™ Model SSB-30

The SITE Program assesses but does not approve or endorse technologies.

thousand parts per million (ppm). In some cases, the combination of the **perox-pure™** technology with activated carbon, air stripping, or biological treatment will provide a more economical approach than would be obtained by using only one technology.

STATUS:

The **perox-pure™** technology was accepted into the SITE Demonstration Program in April 1991. A Model SSB-30 (see photograph on previous page) was demonstrated in September 1992 at the Lawrence Livermore National Laboratory Superfund site in Altamont Hills, California. The purpose of this demonstration was to measure how well the **perox-pure™** technology removed volatile organic compounds from contaminated groundwater at the site. The Demonstration Bulletin (EPA/540/MR-93/501), Technology Demonstration Summary (EPA/540/SR-93/501), Applications Analysis Report (EPA/540/AR-93/501), and Technology Evaluation Report (EPA/540/R-93/501) are available from EPA.

This technology has been successfully applied to over 250 sites throughout the United States, Canada, the Far East, and Europe. The treat-ment units at these sites have treated contaminated groundwater, industrial wastewater, contaminated drinking water, landfill leachates, and industrial reuse streams (process waters). Equipment treatment rates range from several gallons to several thousand gallons per minute.

DEMONSTRATION RESULTS:

Operating parameters for the treatment system were varied during the demonstration. Three reproducibility tests were performed at the optimum operating conditions, which were selected from the initial test runs.

In most cases, the **perox-pure™** technology reduced trichloroethene, tetrachloroethene, chloroform, trichloroethane, and dichloroethane to below analytical detection limits. For each organic contaminant, the **perox-pure™** technology complied with California action levels and federal drinking water maximum contaminant levels at the 95 percent confidence level. The quartz sleeve wipers effectively cleaned the sleeves and eliminated the interference caused by tube scaling.

FOR FURTHER INFORMATION:

EPA PROJECT MANAGER:
Norma Lewis
U.S. EPA
National Risk Management Research Laboratory
26 West Martin Luther King Drive
Cincinnati, OH 45268
513-569-7665
Fax: 513-569-7787

TECHNOLOGY DEVELOPER CONTACT:
Bertrand Dussert
Calgon Carbon Advanced Oxidation Technologies
500 Calgon Carbon Drive
Pittsburgh, PA 15205
412-787-6681
Fax: 412-787-6682
E-mail: Dussert@calgcarb.com

The SITE Program assesses but does not approve or endorse technologies.

CF SYSTEMS CORPORATION
(Liquified Gas Solvent Extraction [LG-SX] Technology)

TECHNOLOGY DESCRIPTION:

The CF Systems Corporation (CF Systems) liquified gas solvent extraction (LG-SX) technology uses liquified gas solvents to extract organics from soils, sludges, sediments, and wastewaters. Gases, when liquified under pressure, have unique physical properties that enhance their use as solvents. The low viscosities, densities, and surface tensions of these gases result in significantly higher rates of extraction compared to conventional liquid solvents. These enhanced physical properties also accelerate treated water's gravity settling rate following extraction. Due to their high volatility, gases are also easily recovered from the suspended solids matrix, minimizing solvent losses.

Liquified propane solvent is typically used to treat soils, sludges, and sediments, while liquified carbon dioxide is typically used to treat wastewater. The extraction system uses a batch extractor-decanter design for solids and sludges and a continuous trayed tower design for wastewaters and low-solids wastes.

Contaminated solids, slurries, or wastewaters are fed into the extraction system along with solvent (see figure below). After the solvent and organics are separated from the treated feed, the solvent and organic mixture passes to the solvent recovery system. Once in the solvent recovery system, the solvent is vaporized and recycled as fresh solvent. The organics are drawn off and either reused or disposed of. Treated feed is discharged from the extraction system as a slurry. The slurry is filtered and dewatered. The reclaimed water is recycled to the extraction system and the filter cake is sent for disposal or reused.

WASTE APPLICABILITY:

The LG-SX technology can be applied to soils and sludges containing volatile and semivolatile organic compounds and other higher boiling point complex organics, such as polynuclear aromatic hydrocarbons (PAH), polychlorinated biphenyls (PCB), dioxins, and pentachlorophenol (PCP). This process can also treat refinery wastes and wastewater contaminated with organics.

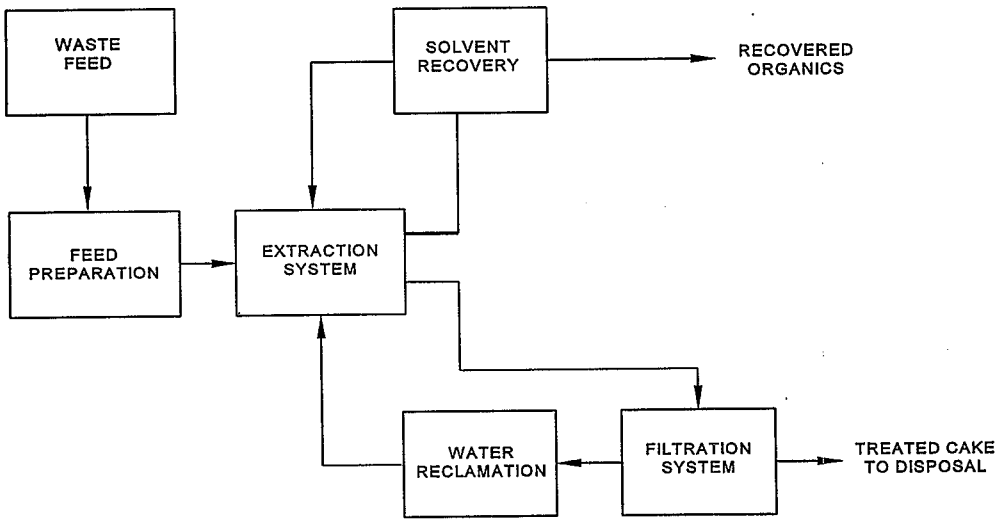

Liquified Gas Solvent Extraction (LG-SX) Technology

The SITE Program assesses but does not approve or endorse technologies.

STATUS:

This technology was accepted into the SITE Demonstration Program in 1988. Under the SITE Program, a pilot-scale mobile demonstration unit was tested in September 1988 on PCB-laden sediments from the New Bedford Harbor Superfund site in Massachusetts. PCB concentrations in the harbor sediment ranged from 300 parts per million (ppm) to 2,500 ppm. The Technology Evaluation Report (EPA/540/5-90/002) and the Applications Analysis Report (EPA/540/A5-90/002) are available from EPA.

A pilot-scale treatability study was completed on PCB-contaminated soil from a Michigan Superfund site. Analytical data showed that the treatment reduced PCB levels to below 5 parts per million (ppm), representing a 98 percent removal efficiency for this waste. A Project Summary (EPA/540/SR-95/505), which details results from this work, is available from EPA.

CF Systems completed the first commercial on-site treatment operation at Star Enterprise in Port Arthur, Texas. The propane-based solvent extraction unit processed listed refinery K- and F-wastes, producing Resource Conservation and Recovery Act treated solids that met EPA land-ban requirements. The unit operated continuously from March 1991 to March 1992 and was on-line more than 90 percent of the time. Following heavy metals fixation, the treated solids were disposed of in a Class I landfill.

Effective mid-1998, Morrison Knudsen Corporation, owner of CF Environmental Corporation, has terminated research and development of the LG-SX program, and no longer actively markets the technology.

DEMONSTRATION RESULTS:

This technology was demonstrated concurrently with dredging studies managed by the U.S. Army Corps of Engineers. Contaminated sediments were treated by the LG-SX technology, using a liquified propane and butane mixture as the extraction solvent. The demonstration at the New Bedford site yielded the following results:

- Extraction efficiencies were 90 to 98 percent for sediments containing PCBs between 360 and 2,575 ppm. PCB concentrations were as low as 8 ppm in the treated sediment.
- Volatile and semivolatile organics in aqueous and semisolid wastes were extracted with 99.9 percent efficiency.
- Operating problems included solids retention in the system hardware and foaming in receiving tanks. The problems were corrected in the full-scale operations at Star Enterprise.
- Projected costs for PCB cleanup were estimated at $150 to $450 per ton, including material handling and pre- and posttreatment costs. These costs are highly dependent on the utilization factor and job size, which may result in lower costs for large cleanups.

EPA PROJECT MANAGER:
Mark Meckes
U.S. EPA
National Risk Management Research Laboratory
26 West Martin Luther King Drive
Cincinnati, OH 45268
513-569-7348
Fax: 513-569-7328

TECHNOLOGY DEVELOPER CONTACT:
V.M. Poxleitner
Morrison Knudsen Corporation
P.O. Box 73
Boise, ID 83729
208-386-5361

The SITE Program assesses but does not approve or endorse technologies.

CHEMFIX TECHNOLOGIES, INC.
(Solidification and Stabilization)

TECHNOLOGY DESCRIPTION:

In this solidification and stabilization process, pozzolanic materials react with polyvalent metal ions and other waste components to produce a chemically and physically stable solid material. Optional binders and reagents may include soluble silicates, carbonates, phosphates, and borates. The end product may be similar to a clay-like soil, depending on the characteristics of the raw waste and the properties desired in the end product.

The figure below illustrates the Chemfix Technologies, Inc. (Chemfix), process. Typically, the waste is first blended in a reaction vessel with pozzolanic materials that contain calcium hydroxide. This blend is then dispersed throughout an aqueous phase. The reagents react with one another and with toxic metal ions, forming both anionic and cationic metal complexes. Pozzolanics that accelerate and other reagents that precipitate metals can be added before or after the dry binder is initially mixed with the waste.

When a water soluble silicate reacts with the waste and the pozzolanic binder system, colloidal silicate gel strengths are increased within the binder-waste matrix, helping to bind polyvalent metal cations. A large percentage of the heavy metals become part of the calcium silicate and aluminate colloidal structures formed by the pozzolans and calcium hydroxide. Some of the metals, such as lead, adsorb to the surface of the pozzolanic structures. The entire pozzolanic matrix, when physically cured, decreases toxic metal mobility by reducing the incursion of leaching liquids into and out of the stabilized matrices.

WASTE APPLICABILITY:

This process is suitable for contaminated soils, sludges, ashes, and other solid wastes. The process is particularly applicable to electroplating sludges, electric arc furnace dust, heavy metal contaminated soils, oil field drilling muds and cuttings, municipal sewage sludges, and residuals from other treatment processes. This process effectively treats heavy metals, such as antimony, arsenic, lead, cadmium, hexavalent chromium,

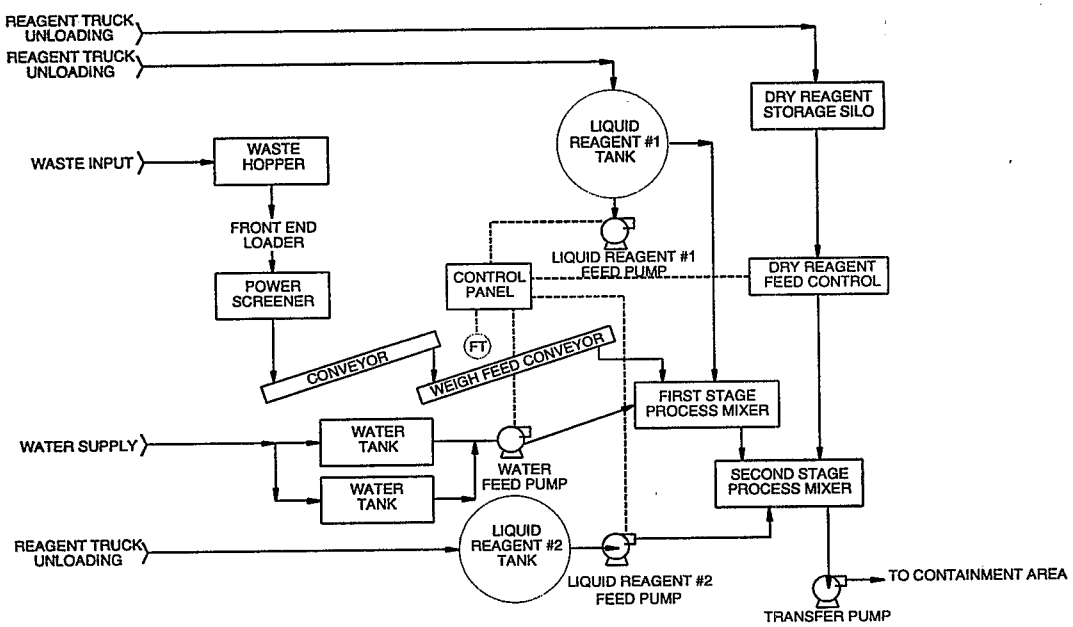

Process Flow Diagram

The SITE Program assesses but does not approve or endorse technologies.

mercury, copper, and zinc. In addition, when combined with specialized binders and additives, this process can stabilize low-level nuclear wastes. With modifications, the system may be applied to wastes containing between 10 to 100 percent solids.

STATUS:

The solidification and stabilization process was accepted into the SITE Demonstration Program in 1988. The process was demonstrated in March 1989 at the Portable Equipment Salvage Company site in Clackamas, Oregon. The Technology Evaluation Report (EPA/540/5-89/011a) and the Applications Analysis Report (EPA/540/A5-89/011) are available from EPA.

In addition, several full-scale remediation projects have been completed since 1977, including a 1991 high solids CHEMSET® reagent protocol designed by Chemfix to treat 30,000 cubic yards of hexavalent chromium-contaminated, high solids waste. The average chromium level after treatment was less than 0.15 milligram per liter and met toxicity characteristic leaching procedure (TCLP) criteria. The final product permeability was less than 1×10^{-6} centimeters per second (cm/sec).

DEMONSTRATION RESULTS:

The demonstration yielded the following results:

- The technology effectively reduced copper and lead concentrations in the wastes. The concentrations in the TCLP extracts from the treated wastes were 94 to 99 percent less than those from the untreated wastes. Total lead concentrations in the untreated waste approached 14 percent.
- The volume of excavated waste material increased between 20 and 50 percent after treatment.
- During the durability tests, the treated wastes showed little or no weight loss after 12 cycles of wetting and drying or freezing and thawing.
- The unconfined compressive strength of the wastes varied between 27 and 307 pounds per square inch after 28 days. Hydraulic conductivity of the treated material ranged between 1×10^{-6} cm/sec and 6.4×10^{-7} cm/sec.
- Air monitoring data suggest there was no significant volatilization of polychlorinated biphenyls during the treatment process.
- Treatment costs were approximately $73 per ton, including mobilization, labor, reagents, and demobilization, but not disposal.

FOR FURTHER INFORMATION:

EPA PROJECT MANAGER:
Edwin Barth
U.S. EPA
National Risk Management Research Laboratory
26 West Martin Luther King Drive
Cincinnati, OH 45268
513-569-7669
Fax: 513-569-7585

TECHNOLOGY DEVELOPER CONTACT:
David Donaldson
Chemfix Technologies, Inc.
3500 North Causeway Boulevard
Suite 720
Metairie, LA 70002
504-831-3600
Fax: 504-833-4615

The SITE Program assesses but does not approve or endorse technologies.

COGNIS, INC.
(TERRAMET® Soil Remediation System)

TECHNOLOGY DESCRIPTION:

The COGNIS, Inc. (COGNIS), TERRAMET® soil remediation system leaches and recovers lead and other metals from contaminated soil, dust, sludge, or sediment. The system uses a patented aqueous leachant that is optimized through treatability tests for the soil and the target contaminant. The TERRAMET® system can treat most types of lead contamination, including metallic lead and lead salts and oxides. The lead compounds are often tightly bound by fine soil constituents such as clay, manganese and iron oxides, and humus.

The figure below illustrates the process. A pretreatment, physical separation stage may involve dry screening to remove gross oversized material. The soil can be separated into oversized (gravel), sand, and fine (silt, clay, and humus) fractions. Soil, including the oversized fraction, is first washed. Most lead contamination is typically associated with fines fraction, and this fraction is subjected to countercurrent leaching to dissolve the adsorbed lead and other heavy metal species. The sand fraction may also contain significant lead, especially if the contamination is due to particulate lead, such as that found in battery recycling, ammunition burning, and scrap yard activities. In this case, the sand fraction is pretreated to remove dense metallic or magnetic materials before subjecting the sand fraction to countercurrent leaching. Sand and fines can be treated in separate parallel streams.

After dissolution of the lead and other heavy metal contaminants, the metal ions are recovered from the aqueous leachate by a metal recovery process such as reduction, liquid ion exchange, resin ion exchange, or precipitation. The metal recovery technique depends on the metals to be recovered and the leachant employed. In most cases, a patented reduction process is used so that the metals are recovered in a compact form suitable for recycling. After the metals are recovered, the leachant can be reused within the TERRAMET® system for continued leaching.

Important characteristics of the TERRAMET® leaching/recovery combination are as follows: (1) the leachant is tailored to the substrate and the contaminant; (2) the leachant is fully recycled within the treatment plant; (3) treated soil can be returned on site; (4) all soil fractions can be treated; (5) end products include treated soil and recycled

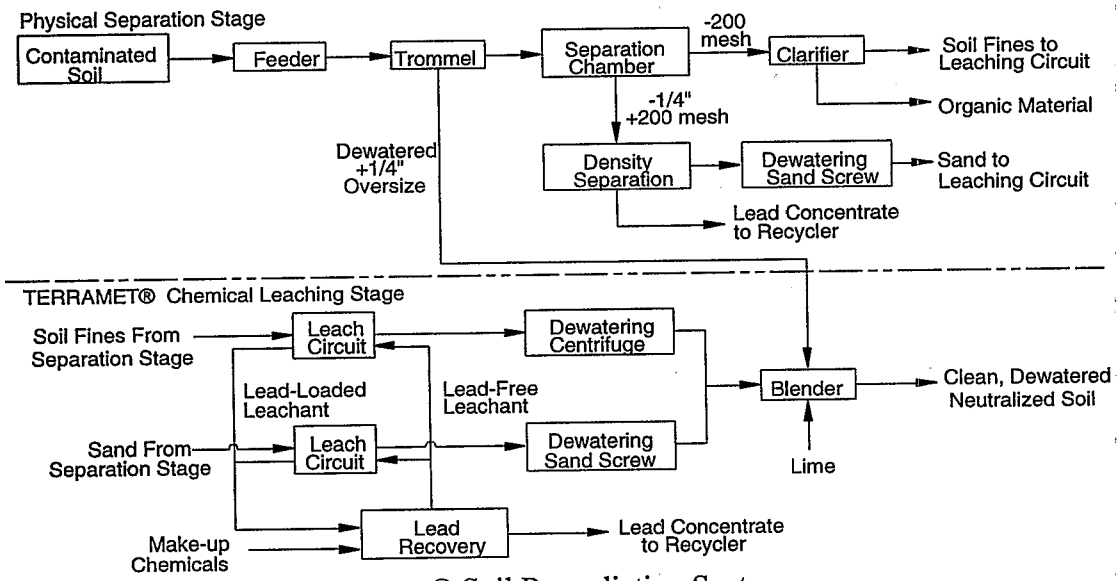

TERRAMET® Soil Remediation System

The SITE Program assesses but does not approve or endorse technologies.

metal; and (6) no waste is generated during processing.

WASTE APPLICABILITY:

The COGNIS TERRAMET® soil remediation system can treat soil, sediment, and sludge contaminated by lead and other heavy metals or metal mixtures. Appropriate sites include contaminated ammunition testing areas, firing ranges, battery recycling centers, scrap yards, metal plating shops, and chemical manufacturers. Certain lead compounds, such as lead sulfide, are not amenable to treatment because of their exceedingly low solubilities. The system can be modified to leach and recover other metals, such as cadmium, zinc, copper, and mercury, from soils.

STATUS:

This technology was accepted into the SITE Emerging Technology Program in August 1992. Based on results from the Emerging Technology Program, the technology was accepted into the SITE Demonstration Program in 1994. The demonstration took place at the Twin Cities Army Ammunition Plant (TCAAP) Site F during August 1994. The TERRAMET® system was evaluated during a full-scale remediation conducted by COGNIS at TCAAP. The full-scale system was linked with a soil washing process developed by Brice Environmental Services Corporation (BESCORP). The system treated soil at a rate of 12 to 15 tons per hour. An Innovative Technology Evaluation Report describing the demonstration and its results will be available in 1998.

The TERRAMET® system is now available through Doe Run, Inc. (see contact information below). For further information about the development of the system, contact the Dr. William Fristad (see contact information below). For further information on the BESCORP soil washing process, refer to the profile in the Demonstration Program section (completed projects).

DEMONSTRATION RESULTS:

Lead levels in the feed soil ranged from 380 to 1,800 milligrams per kilogram (mg/kg). Lead levels in untreated and treated fines ranged from 210 to 780 mg/kg and from 50 to 190 mg/kg, respectively. Average removal efficiencies for lead were about 75 percent. The TERRAMET® and BESCORP processes operated smoothly at a feed rate of 12 to 15 tons per hour. Size separation using the BESCORP process proved to be effective and reduced the lead load to the TERRAMET® leaching process by 39 to 63 percent. Leaching solution was recycled, and lead concentrates were delivered to a lead smelting facility. The cost of treating contaminated soil at the TCAAP site using the COGNIS and BESCORP processes is about $200 per ton of treated soil, based on treatment of 10,000 tons of soil. This cost includes the cost of removing ordnance from the soil.

FOR FURTHER INFORMATION:

EPA PROJECT MANAGER:
Michael Royer
U.S. EPA
National Risk Management Research Laboratory
2890 Woodbridge Avenue, MS-104
Edison, NJ 08837-3679
908-321-6633
Fax: 908-321-6640

SYSTEM DEVELOPER
William E. Fristad
Parker Amchem
32100 Stephenson Hwy
Madison Heights, MI 48071
248-588-4719
Fax: 248-583-2976

TECHNOLOGY CONTACT
Lou Magdits, TERRAMET® Manager
Doe Run, Inc.
Buick Resource Recycling Facility
Hwy KK
HC 1 Box 1395
Boss, MO 65440
573-626-3476
Fax: 573-626-3405
E-mail: lmagdits@misn.com

The SITE Program assesses but does not approve or endorse technologies.

COLORADO DEPARTMENT OF PUBLIC HEALTH AND ENVIRONMENT
(developed by COLORADO SCHOOL OF MINES)
(Constructed Wetlands-Based Treatment)

TECHNOLOGY DESCRIPTION:

The constructed wetlands-based treatment technology uses natural geochemical and microbiological processes inherent in an artificial wetland ecosystem to accumulate and remove metals from influent waters. The treatment system incorporates principal ecosystem components found in wetlands, such as organic materials (substrate), microbial fauna, and algae.

Influent waters with high metal concentrations flow through the aerobic and anaerobic zones of the wetland ecosystem. Metals are removed by ion exchange, adsorption, absorption, and precipitation through geochemical and microbial oxidation and reduction. Ion exchange occurs as metals in the water contact humic or other organic substances in the soil medium. Oxidation and reduction reactions that occur in the aerobic and anaerobic zones, respectively, precipitate metals as hydroxides and sulfides. Precipitated and adsorbed metals settle in quiescent ponds or are filtered out as the water percolates through the soil or substrate.

WASTE APPLICABILITY:

The constructed wetlands-based treatment process is suitable for acid mine drainage from metal or coal mining activities. These wastes typically contain high concentrations of metals and low pH. Wetlands treatment has been applied with some success to wastewater in the eastern United States. The process may have to be adjusted to account for differences in geology, terrain, trace metal composition, and climate in the metal mining regions of the western United States.

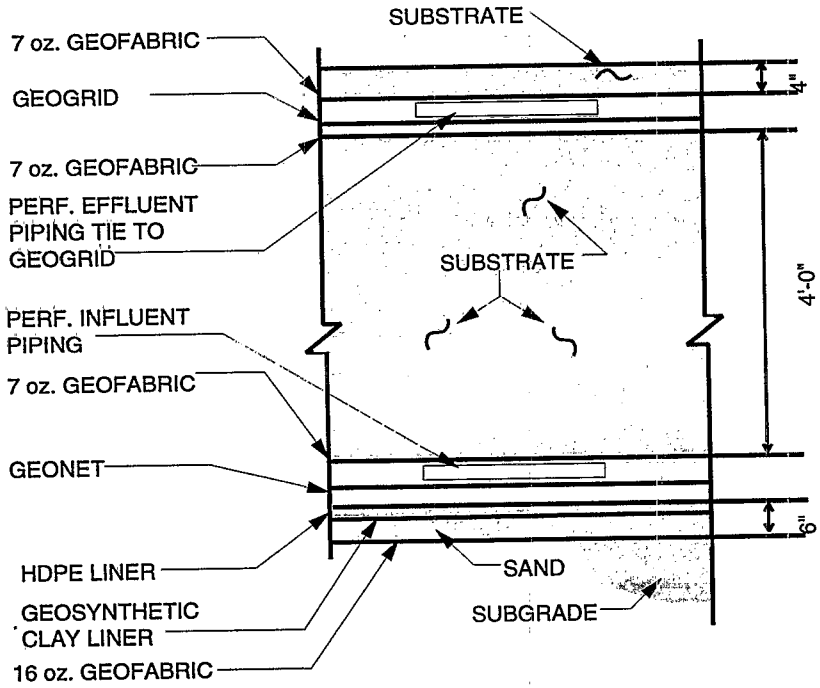

Schematic Cross Section of Pilot-Scale Upflow Cell

The SITE Program assesses but does not approve or endorse technologies.

STATUS:

Based on the results of tests conducted during the SITE Emerging Technology Program (ETP), the constructed wetlands-based treatment process was selected for the SITE Demonstration Program in 1991. Results from the ETP tests indicated an average removal rate of 50 percent for metals. For further information on the ETP evaluation, refer to the Emerging Technology Summary (EPA/540/SR-93/523), the Emerging Technology Report (EPA/540/R-93/523), or the Emerging Technology Bulletin (EPA/540/F-92/001), which are available from EPA.

DEMONSTRATION RESULTS:

Studies under the Demonstration Program evaluated process effectiveness, toxicity reduction, and biogeochemical processes at the Burleigh Tunnel, near Silver Plume, Colorado. Treatment of mine discharge from the Burleigh Tunnel is part of the remedy for the Clear Creek/Central City Superfund site. Construction of a pilot-scale treatment system began in summer 1993 and was completed in November 1993. The pilot-scale treatment system covered about 4,200 square feet and consisted of an upflow cell (see figure on previous page) and a downflow cell. Each cell treats about 7 gallons per minute of flow. Preliminary results indicated high removal efficiency (between 80 to 90 percent) for zinc, the primary contaminant in the discharge during summer operation. Zinc removal during the first winter of operation ranged from 60 to 80 percent.

Removal efficiency of dissolved zinc for the upflow cell between March and September remained above 90 percent; however, the removal efficiency between September and December 1994 declined to 84 percent due to the reduction in microbial activity in the winter months. The removal efficiency in the downflow cell dropped to 68 percent in the winter months and was between 70 and 80 percent during the summer months. The 1995 removal efficiency of dissolved zinc for the upflow cell declined from 84 percent to below 50 percent due to substrate hydrologic problems originating from attempts to insulate this unit during the summer months. A dramatic upset event in the spring of 1995 sent about four times the design flow through the upflow cell, along with a heavy zinc load. The heavy zinc load was toxic to the upflow cell and it never recovered to previous performance levels. Since the upset event, removal efficiency remained at or near 50 percent.

The 1995 removal efficiency of the downflow cell declined from 80 percent during the summer months to 63 percent during winter, again a result of reduced microbial activity. The 1996 removal efficiency of dissolved zinc calculated for the downflow cell increased from a January low of 63 percent to over 95 percent from May through August. The increase in the downflow removal efficiency is related to reduced flow rates through the downflow substrate, translating to increased residence time.

The SITE demonstration was completed in mid-1998, and the cells were decommissioned in August 1998. An Innovative Technology Evaluation Report for the demonstration will be available in 1999. Information on the technology can be obtained through below-listed sources.

FOR FURTHER INFORMATION:

EPA PROJECT MANAGER:
Edward Bates
U.S. EPA
National Risk Management Research Laboratory
26 West Martin Luther King Drive
Cincinnati, OH 45268
513-569-7774 Fax: 513-569-7676

TECHNOLOGY DEVELOPER CONTACT:
James Lewis
Colorado Department of Public Health and Environment
4300 Cherry Creek Drive South
HMWMD-RP-B2
Denver, CO 80220-1530
303-692-3390 Fax: 303-759-5355

The SITE Program assesses but does not approve or endorse technologies.

COMMODORE APPLIED TECHNOLOGIES, INC.
(Solvated Electron Technology, SET™ Remediation System)

TECHNOLOGY DESCRIPTION:

Commmodore Applied Technologies, Inc.'s (Commodore), solvated electron technology (SET™) remediation system chemically reduces toxic contaminants such as polychlorinated biphenyls (PCB), pesticides, and other halogenated compounds into benign substances. The solvating system uses a solution of ammonia and an "active" metal to create a powerful reducing agent that can clean up contaminated soils, sediments, and liquids.

A solvated electron solution is a liquid homogeneous mixture that produces a large supply of free electrons. It can be created by combining liquid ammonia with a metal such as sodium, calcium, lithium, or potassium. When a solvated electron solution is mixed with a contaminated material, the free electrons in the solution chemically convert the contaminant to relatively harmless substances and salts.

The SET™ process consists of components to move and recover the ammonia (such as piping, pumps, and tanks), along with reactor vessels which hold the contaminated medium and the solvating solution. The system can be transported to different field sites, but the process is performed ex situ, meaning that the contaminated medium must be introduced into the reactor vessels.

The treatment process begins by placing the contaminated medium into the reactor vessels, where the medium is then mixed with ammonia.

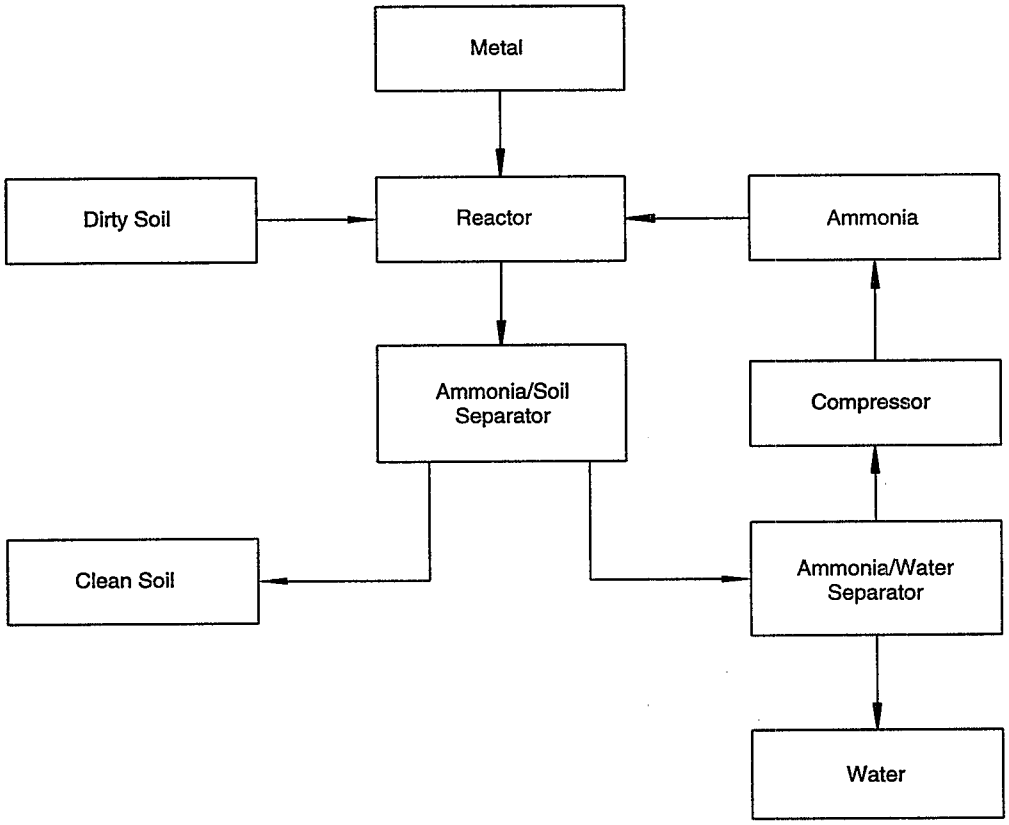

Schematic Diagram of the Solvated Electron Remediation System

The SITE Program assesses but does not approve or endorse technologies.

One of the reactive metals (usually sodium) is then added to the contaminated medium-ammonia mixture, and a chemical reaction ensues. After the chemical reaction is complete (about 1 minute), the ammonia is removed to a discharge tank for reuse. The treated medium is then removed from the reactor vessels, tested for contamination, and returned to the site.

WASTE APPLICABILITY:

Commodore claims that its solvating electron remediation system can effectively decontaminate soils, sludges, sediments, oils, hand tools, and personal protective clothing. The technology chemically transforms PCBs, pesticides, and other halogenated compounds into relatively benign salts. Commodore also believes that the technology is effective in treating chemical warfare agents and radionuclides.

STATUS:

Commodore was accepted into the SITE Demonstration Program in 1995 and is also participating in the Rapid Commercialization Initiative (RCI). RCI was created by the Department of Commerce, Department of Defense, Department of Energy, and EPA to assist in the integration of innovative technologies into the marketplace.

Commodore demonstrated the solvating system at the Construction Battalion Supply Center in Port Hueneme, California in September 1996. The demonstration was designed to evaluate the system's performance capability, costs, and design parameters. Results from the demonstration will be presented in an Innovative Technology Evaluation Report, which is available from EPA.

In October 1997, Commodore was awarded a contract to remediate mixed waste material at the U.S. Department of Energy site at Weldon Spring, Missouri using the SET™ technology.

A nationwide permit for the destruction of PCBs and metals in soils was issued for the SET™ process by the EPA in March, 1997. This permit was amended in May 1998 to include the destruction of PCBs in oil.

FOR FURTHER INFORMATION:

EPA PROJECT MANAGER:
Paul dePercin
U.S. EPA
National Risk Management Research Laboratory
26 West Martin Luther King Drive
Cincinnati, OH 45268
513-569-7797
Fax: 513-569-7105
E-Mail: dePercin.Paul@epamail.epa.gov

TECHNOLOGY DEVELOPER CONTACT:
Peter E. Harrod
President
Commodore Solution Technologies, Inc.
2340 Menaul Boulevard, NE
Albuquerque, NM 87111
505-872-3508
Fax: 505-872-6827
E-Mail: pharrod@adv-sci.com

The SITE Program assesses but does not approve or endorse technologies.

CURE INTERNATIONAL, INC.
(CURE®-Electrocoagulation Wastewater Treatment System)

TECHNOLOGY DESCRIPTION:

The CURE® - Electrocoagulation (CURE®) system is designed to remove ionic metal species and other charged particles from water (see figure below). Because many toxic metal ions such as nickel, lead, and chromates are held in solution by electrical charges, they will precipitate out of solution if they are neutralized with oppositely charged ions. The CURE® system is effective at breaking oily emulsions and removing suspended solids. The system improves on previous electrocoagulation methods through a unique geometrical configuration.

The CURE® system's patented geometry maximizes liquid surface contact between the anode and concentric cathode electrocoagulation tubes, thus minimizing the power requirements for efficient operation. The CURE® system allows the contaminated water to flow continuously through the cathode tube, enabling a direct current to pass uniformly through a water stream. The contaminated water then passes through the annular space between the cathode and anode tubes and is exposed to sequential positive and negative electrical fields. Typical retention time is less than 20 seconds. Water characteristics such as pH, oxidation-reduction potential, and conductivity can be adjusted to achieve maximum removal efficiencies for specific contaminants.

After the treated water exits the electrocoagulation tubes, the destabilized colloids are allowed to flocculate and are then separated with an integrated clarifier system. Polymers can be added to enhance flocculation, but in most cases they are not required. The sludge produced by this process is usually very stable and acid-resistant. Tests have shown that sludges produced by the CURE®

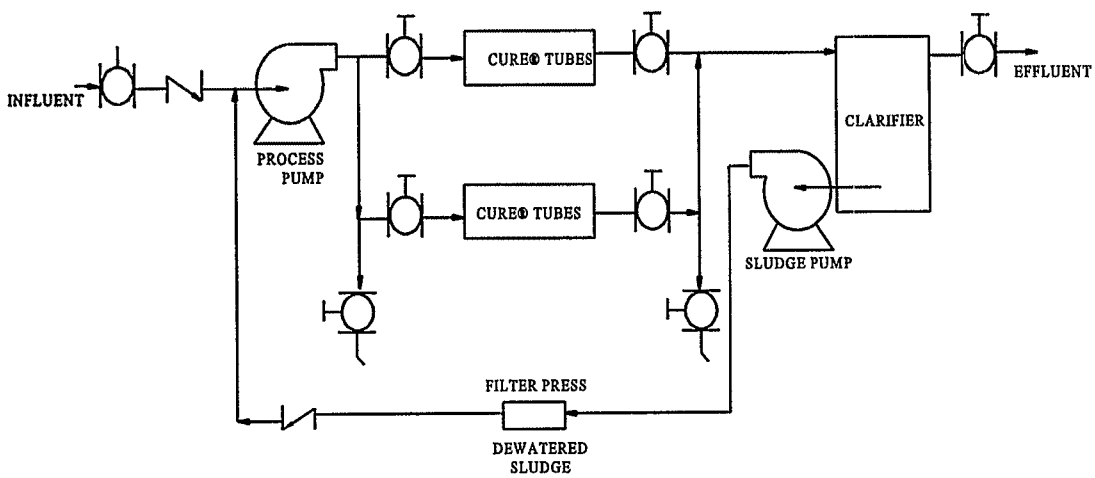

CURE®-Electrocoagulation System

The SITE Program assesses but does not approve or endorse technologies.

system pass the toxicity characteristic leaching procedure (TCLP) and are often disposed of as nonhazardous waste.

WASTE APPLICABILITY:

The CURE® system can treat a broad range of dissolved metals, including aluminum, arsenic, barium, cadmium, chromium, cyanide, iron, lead, nickel, uranium, and zinc. The system can also treat contaminants such as emulsified oils, suspended solids, paints, and dyes. Radionuclides were removed by the system at the Rocky Flats Environmental Technology Site (RFETS).

Because this system treats a wide range of contaminants, it is suited for industries and utilities such as plating, mining, electronics, industrial wastewater, as well as remediation projects.

STATUS:

This technology was accepted into the SITE Demonstration Program in 1993. A bench-scale test of the technology was conducted in April 1995 to determine the ability of the system to remove radionuclides from solar evaporation water at RFETS. The system removed over 90 percent of uranium and plutonium from the test water. The technology was demonstrated during August and September 1995 at RFETS under a joint agreement between the Department of Energy, the State of Colorado, and EPA.

The technology has proven to be very effective in a diverse number of industrial applications including metal refinishing, oil treatment plants, acid mine drainage and cooling towers in the U.S. and internationally. Full or pilot scale units are available from CURE® International, Inc.

DEMONSTRATION RESULTS:

During the SITE demonstration, four 3-hour test runs were conducted at RFETS over a 2-week period. Prior to the demonstration, operating parameters were adjusted during several optimization runs.

The demonstration showed that the system removed 30 to 50 percent of uranium and 60 to 99 percent of plutonium from the solar pond water at RFETS. The radionuclide and metal content of the dewatered sludge indicated that these contaminants were highly concentrated in the sludge. Uranium and plutonium were only slightly leachable by TCLP and no metals were leachable by TCLP. These results suggest that the sludge is very stable and resistant to breakdown.

The Demonstration Bulletin (EPA/540/MR-96/502), Technology Capsule (EPA/540/R-92/502a), and Innovative Technology Evaluation Report (EPA/540/R-96/502) are available from EPA.

FOR FURTHER INFORMATION:

EPA PROJECT MANAGER:
Steven Rock
U.S. EPA
National Risk Management Research Laboratory
26 West Martin Luther King Drive
Cincinnati, OH 45268
513-569-7149
Fax: 513-569-7105

TECHNOLOGY DEVELOPER CONTACT:
David Stanton, President
CURE International, Inc.
1001 U.S. Highway One, Suite 409
Jupiter, FL 33477
561-575-3500
Fax: 561-575-9510

The SITE Program assesses but does not approve or endorse technologies.

E.I. DUPONT DE NEMOURS AND COMPANY, and OBERLIN FILTER COMPANY
(Membrane Microfiltration)

TECHNOLOGY DESCRIPTION:

This membrane microfiltration system is designed to remove solid particles from liquid wastes, forming filter cakes typically ranging from 40 to 60 percent solids. The system can be manufactured as an enclosed unit, requires little or no attention during operation, is mobile, and can be trailer-mounted.

The membrane microfiltration system uses an automatic pressure filter (developed by Oberlin Filter Company), combined with a special Tyvek® filter material (Tyvek® T-980) made of spun-bonded olefin (invented by E.I. DuPont de Nemours and Company) (see figure below). The filter material is a thin, durable plastic fabric with tiny openings about 1 ten-millionth of a meter in diameter. These openings allow water or other liquids and solid particles smaller than the openings to flow through. Solids in the liquid stream that are too large to pass through the openings accumulate on the filter and can be easily collected for disposal.

The automatic pressure filter has two chambers: an upper chamber for feeding waste through the filter, and a lower chamber for collecting the filtered liquid (filtrate). At the start of a filter cycle, the upper chamber is lowered to form a liquid-tight seal against the filter. The waste feed is then pumped into the upper chamber and through the filter. Filtered solids accumulate on the Tyvek® surface, forming a filter cake, while filtrate collects in the lower chamber. Following filtration, air is fed into the upper chamber at a pressure of about 45 pounds per square inch. Air removes any liquid remaining in the upper chamber and further dries the filter cake. When the filter cake is dry, the upper chamber is lifted, and the filter cake is automatically discharged. Clean filter material is then drawn from a roll into the system for the next cycle. Both the filter cake and the filtrate can be collected and treated further before disposal, if necessary.

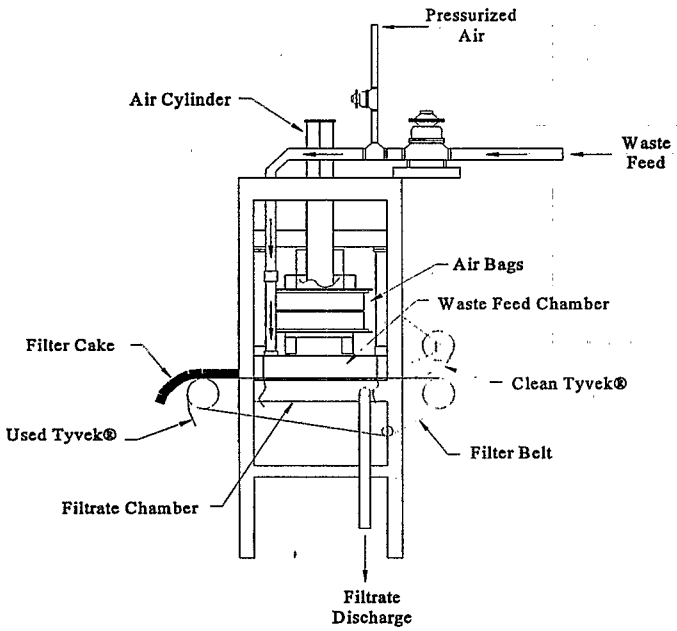

Membrane Microfiltration System

The SITE Program assesses but does not approve or endorse technologies.

WASTE APPLICABILITY:

This membrane microfiltration system may be applied to (1) hazardous waste suspensions, particularly liquid heavy metal- and cyanide bearing wastes (such as electroplating rinsewaters), (2) groundwater contaminated with heavy metals, (3) constituents in landfill leachate, and (4) process wastewaters containing uranium. The technology is best suited for treating wastes with solids concentrations of less than 5,000 parts per million; otherwise, the cake capacity and handling become limiting factors. The system can treat any type of solids, including inorganics, organics, and oily wastes, with a wide variety of particle sizes. Moreover, because the system is enclosed, it can treat liquid wastes that contain volatile organics.

STATUS:

The membrane microfiltration system, accepted into the SITE Demonstration Program in 1988, was demonstrated at the Palmerton Zinc Superfund site in Palmerton, Pennsylvania. The demonstration was conducted over a 4-week period in April and May 1990. Groundwater from the shallow aquifer at the site was contaminated with dissolved heavy metals, including cadmium, lead, and zinc. This contaminated groundwater served as the feed waste for the demonstration. The system treated waste at a rate of about 1 to 2 gallons per minute.

The Applications Analysis Report (EPA/540/A5-90/007), the Technology Evaluation Report (EPA/540/5-90/007), and a videotape of the demonstration are available from EPA.

Since 1991, about 12 commercial installations of the technology have been operational.

DEMONSTRATION RESULTS:

During the demonstration at the Palmerton Zinc Superfund site, the membrane microfiltration system achieved the following results:

- Removal efficiencies for zinc and total suspended solids ranged from 99.75 to 99.99 percent (averaging 99.95 percent).
- Solids in the filter cake ranged from 30.5 to 47.1 percent.
- Dry filter cake in all test runs passed the Resource Conservation and Recovery Act paint filter liquids test.
- Filtrate met the applicable National Pollutant Discharge Elimination System standards for cadmium, lead, zinc, and total suspended solids.
- A composite filter cake sample passed the extraction procedure toxicity and toxicity characteristic leaching procedure tests for metals.

FOR FURTHER INFORMATION:

EPA PROJECT MANAGER:
John Martin
U.S. EPA
National Risk Management Research Laboratory
26 West Martin Luther King Drive
Cincinnati, OH 45268
513-569-7758
Fax: 513-569-7620

TECHNOLOGY DEVELOPER CONTACT:
Ernest Mayer
E.I. DuPont de Nemours and Company
Nemours 6528
1007 Market Street
Wilmington, DE 19898
302-774-2277
Fax: 302-368-1474

The SITE Program assesses but does not approve or endorse technologies.

DYNAPHORE, INC.
(FORAGER® Sponge)

TECHNOLOGY DESCRIPTION:

The FORAGER® Sponge (Sponge) is an open-celled cellulose sponge containing a polymer with selective affinity for dissolved heavy metals in both cationic and anionic states. The polymer contains iminodiacetic acid groups which enter into chelation bonding with transition-group heavy metal cations. The polymer's affinity for particular cations is influenced by solution parameters such as pH, temperature, and total ionic content. In general, the following affinity sequence for several representative ions prevails:

$Cd^{++} > Cu^{++} > Hg^{++} > Pb^{++} > Au^{+++} > Zn^{++} > Fe^{+++} > Ni^{++} > Co^{++} >> Al^{+++} > Ca^{++} > Mg^{++} >> Na^{+}$

During absorption, a cation is displaced from the polymer. The displaced cation may be H^+ or a cation below the absorbed cation in the affinity sequence.

The polymer also contains tertiary amine salt groups which exhibit selective bonding for anion species such as the following:

CrO_4^{-2}, AsO_4^{-3}, $Au(CN)_2^-$, SeO_4^{-2}, $HgCl_3^-$, $Ag(S_2O_3)^{-3}$, SiO_3^{-2}, UO_4^{-2}

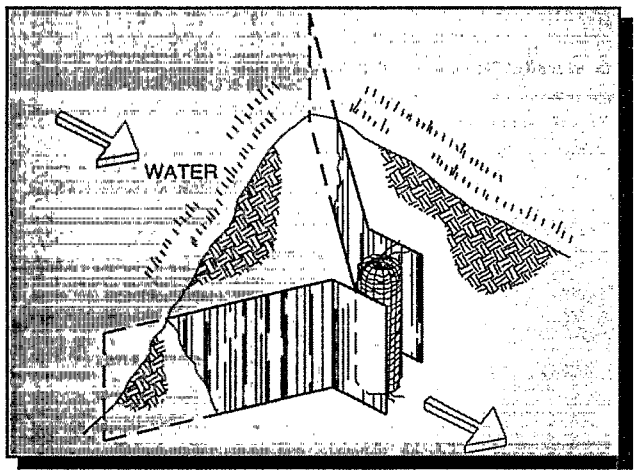

Fishnet Bags Placed Vertically in a Well

The absorption of certain anion species can be enhanced by preabsorption of a cation that ordinarily reacts with a sought anion to produce a highly insoluble compound. For example, a Sponge presaturated with Fe^{+3} strongly absorbs arsenate anion because ferric arsenate is highly insoluble.

The removal efficiency for transition-group heavy metals is about 90 percent at a flow rate of 0.1 bed volume per minute. The Sponge's highly porous nature speeds diffusional effects, promoting high rates of ion absorption. The Sponge can be used in columns, fishnet-type enclosures, or rotating drums. When used in a column, flow rates of three bed volumes per minute can be obtained at hydrostatic pressures only 2 feet above the bed and without additional pressurization. Therefore, Sponge-packed columns are suitable for unattended field use.

Absorbed ions can be eluted from the Sponge using techniques typically employed to regenerate ion-exchange resins and activated carbon. Following elution, the Sponge can be used in the next absorption cycle. The number of useful cycles depends on the nature of the absorbed ions and the elution technique used. Alternatively, the metal-saturated Sponge can be incinerated. In some instances, the Sponge may be dried and reduced in volume to facilitate disposal.

A trailer-mounted pump-and-treat apparatus can handle up to 10 gallons per minute with low pumping pressures of 4 to 10 pounds per square inch. The apparatus employs four or six Plexiglas columns, connected in series, with valving to expedite regeneration and staging. Each column accommodates a fishnet container of Sponge in the form of half-inch cubes. Groundwater can be remediated in situ using elongated fishnet bags that confine the Sponge. The bags are placed vertically in wells, as shown in the figure to the left, or placed horizontally in trenches, as shown in the figure on the next page. Alternatively, the groundwater can be treated aboveground in a packed column configuration.

The SITE Program assesses but does not approve or endorse technologies.

WASTE APPLICABILITY:

The Sponge can scavenge metals in concentration levels of parts per million and parts per billion from industrial discharges, municipal sewage, process streams, and acid mine drainage. The Sponge is particularly useful when treating water with low contaminant levels, especially in polishing or end-of-pipe treatments. Because of the low capital investment required, the Sponge is well-suited for use in short-term remediation projects and for sporadic flow conditions.

STATUS:

This technology was accepted into the SITE Demonstration Program in June 1991. The Sponge was demonstrated in April 1994 at the National Lead Industry site in Pedricktown, New Jersey. The Demonstration Bulletin (EPA/540/MR-94/522), Technology Capsule (EPA/540/R-94/522a), and Innovative Technology Evaluation Report (EPA/540/R-94/522) are available from EPA.

According to the developer, the Sponge has also effectively removed trace heavy metals from acid mine drainage at three locations in Colorado. In bench-scale tests, the Sponge reduced mercury, lead, nickel, cadmium, and chromium in groundwater from various Superfund sites to below detectable levels. The Sponge was also demonstrated in a field-scale installation at a photoprocessing operation. The process reduced chromate and silver by 75 percent at a cost of $1,100 per month. In bench-scale tests, the Sponge has removed lead, mercury, and copper from pourable sludges such as simulated municipal sewage, and from soils slurried with water.

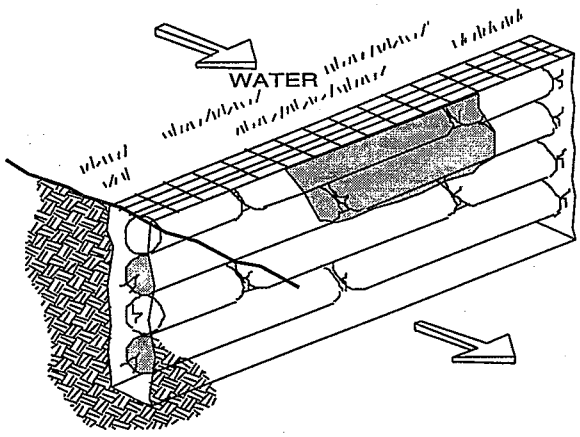

Fishnet Bags Placed Horizontally in a Trench

DEMONSTRATION RESULTS:

Treatment performance from the SITE demonstration was as follows:

Analyte	Average Influence Concentration (μg/L)	Percent Removal
Cadmium	537	90
Copper	917	97
Lead	578	97
Chromium^{III}	426	32

In 1996, the Sponge, configured in a column, was employed in a pump-and-treat remediation of 360,000 gallons of water that had accumulated as a result of a fuel handling operation. The water, containing 0.2 parts per million (ppm) arsenic, was treated at 12 gallons per minute (0.1 bed volume per minute) to produce an effluent having a nondetect level of arsenic.

According to the developer, a newly developed modification of the Sponge (designated Grade 0) has proven effective in removing methyl tert-butyl ether (MTBE) from groundwater and in removing dense non-aqueous phase liquids (DNAPL) from stormwater. The sponge is currently being used in passive, end-of-pipe installations to remove nickel from electroplating effluents.

FOR FURTHER INFORMATION:

EPA Project Manager
Carolyn Esposito, U.S. EPA
National Risk Management Research Laboratory
2890 Woodbridge Avenue
Edison, New Jersey 08837-3679
732-321-6630, Fax: 732-321-6630

TECHNOLOGY DEVELOPER CONTACT:
Norman Rainer, Dynaphore, Inc.
2709 Willard Road
Richmond, VA 23294
804-288-7109, Fax: 804-282-1325

The SITE Program assesses but does not approve or endorse technologies.

ECOVA CORPORATION
(Bioslurry Reactor)

TECHNOLOGY DESCRIPTION:

The ECOVA Corporation (ECOVA) slurry-phase bioremediation (bioslurry) technology aerobically biodegrades creosote-contaminated materials. The technology uses batch and continuous flow bioreactors to process polynuclear aromatic hydrocarbon (PAH)-contaminated soils, sediments, and sludges. The bioreactors are supplemented with oxygen, nutrients, and a specific inoculum of enriched indigenous microorganisms to enhance the degradation process.

Because site-specific environments influence biological treatment, all chemical, physical, and microbial factors are designed into the treatment process. The ultimate goal is to convert organic wastes into relatively harmless by-products of microbial metabolism, such as carbon dioxide, water, and inorganic salts. Biological reaction rates are accelerated in a slurry system because of the increased contact efficiency between contaminants and microorganisms. The photograph below shows the bioslurry reactor.

WASTE APPLICABILITY:

The bioslurry reactor is designed to treat highly contaminated creosote wastes. It can also treat other concentrated contaminants that can be aerobically biodegraded, such as petroleum wastes. The bioslurry reactor system must be engineered to maintain parameters such as pH, temperature, and dissolved oxygen within ranges conducive to the desired microbial activity.

STATUS:

This technology was accepted into the SITE Demonstration Program in spring 1991. From May through September 1991, EPA conducted a

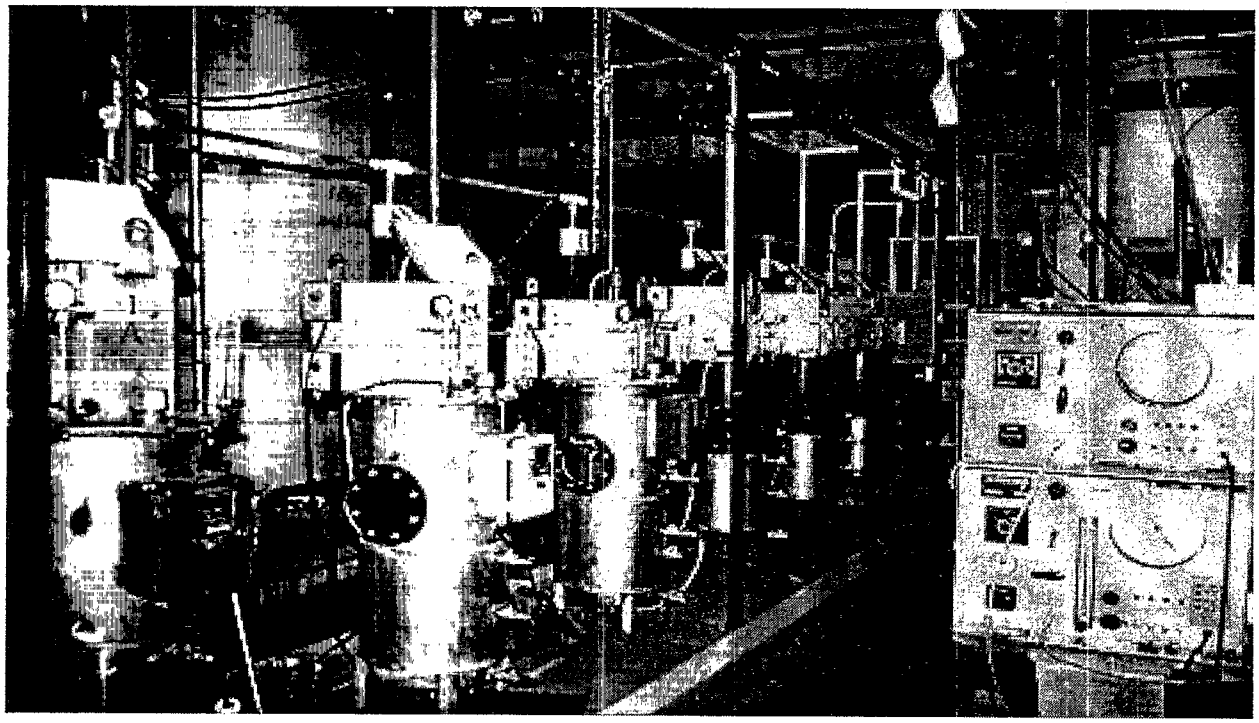

Bioslurry Reactor

The SITE Program assesses but does not approve or endorse technologies.

SITE demonstration using six bioslurry reactors at EPA's Test and Evaluation Facility in Cincinnati, Ohio.

ECOVA conducted bench- and pilot-scale studies to evaluate bioremediation of PAHs in creosote-contaminated soil from the Burlington Northern Superfund site in Brainerd, Minnesota. Bench-scale studies were conducted before pilot-scale evaluations to determine optimal treatment protocols. EIMCO Biolift™ slurry reactors were used for the pilot-scale processing. Data from the optimized pilot-scale program were used to establish treatment standards for K001 wastes as part of EPA's Best Demonstrated Available Technology program.

This technology is no longer available through ECOVA. However, the technology is being implemented by Walsh Environmental Scientists & Engineers. For further information on the technology, contact the EPA Project Manager.

DEMONSTRATION RESULTS:

Results from the SITE demonstration indicated that slurry-phase biological treatment significantly improved biodegradation rates of carcinogenic 4- to 6-ring PAHs. The pilot-scale bioslurry reactor reduced 82 ±15 percent of the total soil-bound PAHs in the first week. After 14 days, total PAHs had been biodegraded by 96 ±2 percent. An overall reduction of 97 ±2 percent was observed over a 12-week treatment period, indicating that almost all biodegradation occurred within the first 2 weeks of treatment. Carcinogenic PAHs were biodegraded by 90 ±3.2 percent to 501 ±103 milligrams per kilogram (mg/kg) from levels of 5,081 ±1,530 mg/kg.

FOR FURTHER INFORMATION:

EPA PROJECT MANAGER:
Ronald Lewis
U.S. EPA
National Risk Management Research Laboratory
26 West Martin Luther King Drive
Cincinnati, OH 45268
513-569-7856
Fax: 513-569-7105

The SITE Program assesses but does not approve or endorse technologies.

ELECTROKINETICS, INC.
(Electrokinetic Soil Processing)

TECHNOLOGY DESCRIPTION:

Electrokinetic, Inc.'s, soil processes extract or remediate heavy metals and organic contaminants in soils. The process can be applied in situ or ex situ with suitable chemical agents to optimize the remediation. For example, conditioning fluids such as suitable acids may be used for electrode (cathode) depolarization to enhance the electrodeposition of certain heavy metals.

The figure below illustrates the field-processing scheme and the flow of ions to respective boreholes (or trenches). The mechanism of electrokinetic soil remediation for the removal of toxic metals involves the application of an electrical field across the soil mass. An in-situ generated acid causes the solubilization of metal salts into the pore fluid. The free ions are then transported through the soil by electrical migration towards the electrode of opposing charge. Metal species with a positive charge are collected at the cathode, while species with a negative charge are collected at the anode.

An acid front migrates towards the negative electrode (cathode), and contaminants are extracted through electroosmosis (EO) and electromigration (EM). The concurrent mobility of the ions and pore fluid decontaminates the soil mass. Electrokinetic remediation is extremely effective in fine-grained soils where other techniques such as pump and treat are not feasible. This is due to the fact that the contaminants are transported under charged electrical fields and not hydraulic gradients.

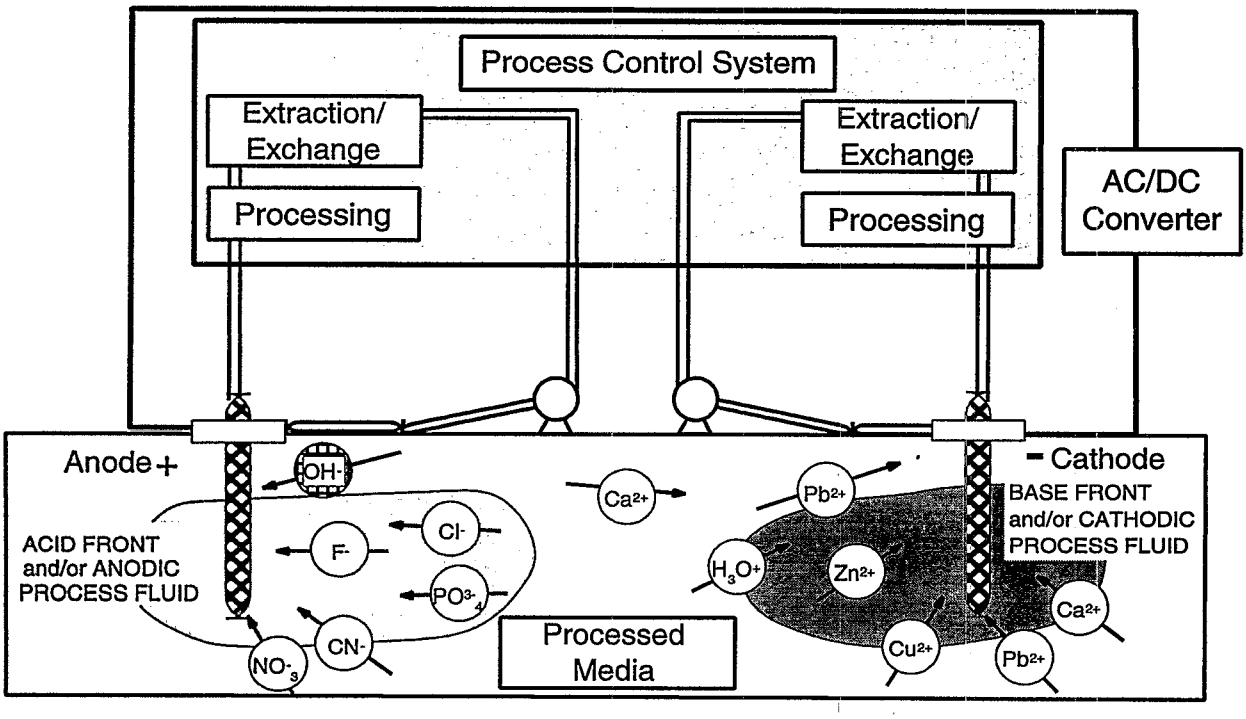

Electrokinetic Remediation Process

The SITE Program assesses but does not approve or endorse technologies.

Bench-scale results show that the process works in both unsaturated and saturated soils. Pore fluid flow moves from the positive electrodes (anodes) to the cathodes under the effect of the EO and EM forces. Electrode selection is important, since many metal or carbon anodes rapidly dissolve after contact with strong oxidants. When the removal of a contaminant is not feasible, the metal can be stabilized in-situ by injecting stabilizing agents or creating an electrokinetic "fence" (reactive treatment wall) that reacts with and immobilizes the contaminants.

WASTE APPLICABILITY:

Electrokinetic soil processing extracts heavy metals, radionuclides, and other inorganic contaminants below their solubility limits. During bench-scale testing, the technology has removed arsenic, benzene, cadmium, chromium, copper, ethylbenzene, lead, mercury, nickel, phenol, trichloroethylene, toluene, xylene, and zinc from soils. Bench-scale studies under the SITE Emerging Technology Program demonstrated the feasibility of removing uranium and thorium from kaolinite.

Limited pilot-scale field tests resulted in lead and copper removal from clays and saturated and unsaturated sandy clay deposits. Treatment efficiency depended on the specific chemicals, their concentrations, and the buffering capacity of the soil. The technique proved 85 to 95 percent efficient when removing phenol at concentrations of 500 parts per million (ppm). In addition, removal efficiencies for lead, chromium, cadmium, and uranium at levels up to 2,000 micrograms per gram ranged between 75 and 98 percent.

STATUS:

Based on results from the Emerging Technology Program, the electrokinetic technology was invited in 1994 to participate in the SITE Demonstration Program. For further information on the pilot-scale system, refer to the Emerging Technology Bulletin (EPA/540/F-95/504), which is available from EPA.The SITE demonstration began in July 1995 at an inactive firing range at the Fort Polk Army Ammunition Reservation in Louisiana. The soil at the site is contaminated with lead, copper, and zinc, which have accumulated over several decades. Concentrations of lead in the sandy clay soil range from 1,000 to 5,000 ppm and are less than 100 ppm at a 3-foot depth. A 20-foot by 60-foot area was remediated to a depth of 3 feet. This demonstration represents the first comprehensive study in the United States of an in situ electrokinetic separation technology applied to heavy metals in soils. Electrokinetics Inc. received the 1996 SBIR Phase II Quality Award from the Department of Defense for its technical achievement on this project.

FOR FURTHER INFORMATION:

EPA PROJECT MANAGER:
Randy Parker
U.S. EPA
National Risk Management Research Laboratory
26 West Martin Luther King Drive
Cincinnati, OH 45268
513-569-7271
Fax: 513-569-7571

TECHNOLOGY DEVELOPER CONTACTS:
Elif Acar
Electrokinetics, Inc.
11552 Cedar Park Ave.
Baton Rouge, LA 70809
504-753-8004
Fax: 504-753-0028

The SITE Program assesses but does not approve or endorse technologies.

ELI ECO LOGIC INC.
(Gas-Phase Chemical Reduction Process)

TECHNOLOGY DESCRIPTION:

The patented ELI Eco Logic Inc. (ECO LOGIC), Gas-Phase Chemical Reduction (GPCR) Process (see photograph below) uses a gas-phase reduction reaction of hydrogen with organic and chlorinated organic compounds at elevated temperatures to produce a hydrocarbon-rich gas product.

The GPCR is a non-incineration technology based upon the ability of hydrogen, at elevated temperatures, to chemically reduce organic and chlorinated organic molecules to primarily methane and hydrochloric acid. The destruction process takes place within a closed-loop system at normal atmospheric pressures with no uncontrolled emissions. As a result, the process involves no free oxygen and therefore eliminates the potential for formation of chlorinated dioxins and furans, which are more toxic than most materials being treated. Any dioxins and furans in the waste are also destroyed in the process.

Waste pretreatment technologies are incorporated into the process to vaporize the organic contaminants that are then carried in the vapor phase to the GPCR reactor for complete reduction. A Thermal Reduction Batch Processor (TRBP) is used to treat bulk solid materials such as drums and electrical equipment.

Watery wastes are preheated with boiler steam in a preheater vessel before injection into the reactor. Hot contaminated material exits the bottom of the vaporizer at a controlled flow rate and enters the reactor through atomizing nozzles. A liquid waste pumping system is used to inject high-strength oily waste directly into the reactor through the atomizing nozzles.

In the reactor, the vaporized organic compounds from the injection of liquid wastes or from the TRBP are chemically reduced in a hydrogen-rich environment to primarily methane and acidic gases. The gas leaving the GPCR reactor is scrubbed in caustic scrubber towers to remove acid gases, water, heat, and fine particulates. The scrubbed product gas is compressed and routed to the product gas storage tank and recycled as fuel to heat various system components.

ECO LOGIC's computerized process control system ensures protection of the workers and the public with its state-of-the-art instrumentation. This instrumentation continuously monitors critical system operating parameters and provides a continuous indication of destruction efficiency. A chemical ionization mass spectrometer and a micro gas chromatograph are used on-line as diagnostic tools for trace monitoring of organic compounds in the product gas stream.

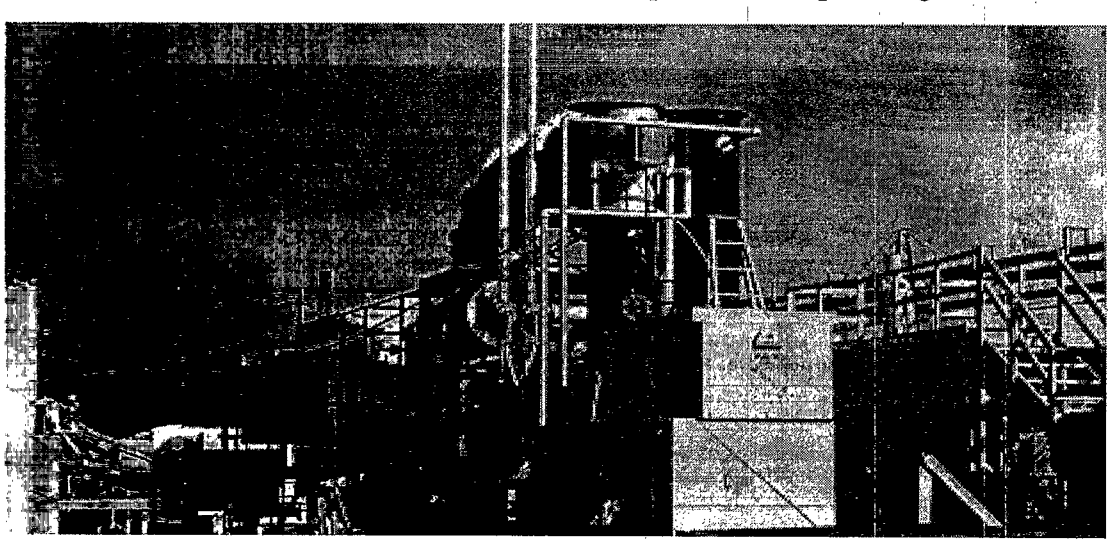

Gas-Phase Chemical Remediation Process

The SITE Program assesses but does not approve or endorse technologies.

Process outputs are analytically tested onsite to ensure compliance with regulatory criteria prior to reuse in the system or off-site disposal. Treated solids are separated into metals and nonmetals, which are then recycled or sent to a landfill.

WASTE APPLICABILITY:

The GPCR process converts organic hazardous waste into clean, reusable or safely disposable products. The process can eliminate most types of organic contaminant in liquids or bulk solid materials in an environmentally acceptable manner. ECO LOGIC has successfully performed numerous laboratory- and pilot-scale demonstrations on liquids, solids, and soils containing polychlorinated biphenyls, pesticides, chemical warfare agents or other complex hazardous organic contaminants.

STATUS:

In October and November 1992, the ECO LOGIC process was demonstrated at the Middleground Landfill in Bay City, Michigan, under a Toxic Substances Control Act research and development permit. The Demonstration Bulletin (EPA/540/MR-93/522) and the Applications Analysis Report (EPA/540/AR-93/522) are available from EPA.

In 1995, the Western Australian government approved the setup of the first commercial-scale ECO LOGIC waste processing system in Kwinana, Western Australia. This unit treats DDT- and PCB-contaminated wastes.

In 1997, ECO LOGIC completed the treatment of over 1,000 tons of PCB-contaminated material at the General Motors of Canada Ltd facility in St. Catharines, Ontario. The materials treated included soil, sediment, and other granular solid material. As part of this project, the Province of Ontario's Ministry of Environment and Energy (MOEE) conducted regulatory testing to evaluate system performance during the treatment of high-strength PCB oil. The ECO LOGIC Process was capable of achieving a DRE of at least seven nines (99.99999 percent) for PCBs and at least six nines for chlorobenzenes in all tests. The MOEE also conducted an air monitoring survey in St. Catharines to determine PCB levels downwind of the treatment system. The MOEE survey concluded that PCBs were not impacting ambient air in the vicinity of the treatment site during treatment of high-strength PCB oil.

DEMONSTRATION RESULTS:

During the Bay City demonstration, two separate waste feed conditions were used: (1) wastewater containing an average PCB concentration of 4,600 parts per million, and (2) waste oil containing an average PCB concentration of 24.5 percent. Both feeds were tested in triplicate. The demonstration of the ECO LOGIC process yielded the following results:

- At least 99.99 percent destruction and removal efficiency for PCBs during all runs
- A 99.99 percent destruction efficiency for perchloroethene, a tracer compound, during all runs
- Net destruction of trace feedstock dioxin and furan compounds during all runs

FOR FURTHER INFORMATION:

EPA PROJECT MANAGER:
Gordon Evans, U.S. EPA
National Risk Management Research Laboratory
26 West Martin Luther King Drive
Cincinnati, OH 45268
513-569-7684 Fax: 513-569-7787

TECHNOLOGY DEVELOPER CONTACT:
Jim Nash- Vice President, Business Development
ELI Eco Logic Inc.
143 Dennis Street
Rockwood, Ontario, Canada N0B 2K0
519-856-9591 ext. 208 Fax: 519-856-9235
E-Mail: nashj@eco-logic-intl.com

The SITE Program assesses but does not approve or endorse technologies.

ELI ECO LOGIC INTERNATIONAL INC.
(Thermal Desorption Unit)

TECHNOLOGY DESCRIPTION:

The ELI Eco Logic International Inc. (Eco Logic), thermal desorption unit (TDU) is specially designed for use with Eco Logic's gas-phase chemical reduction process. The TDU, shown in the figure below, consists of an externally heated bath of molten tin metal (heated with propane) in a hydrogen gas atmosphere. Tin is used for several reasons: tin and hydrogen are nonreactive; tin's density allows soils to float on the molten bath; molten tin is a good fluid for heat transfer; tin is nontoxic in soil; and tin is used as a bath medium in the manufacture of plate glass.

Contaminated soil is conveyed into the TDU feed hopper, where an auger feeds the soil into the TDU. A screw feeder provides a gas seal between the outside air and the hydrogen atmosphere inside the TDU. The auger's variable speed drive provides feed rate control. Soil inside the TDU floats on top of the molten tin and is heated to 600 °C, vaporizing the water and organic material. Decontaminated soil is removed from the tin bath into a water-filled quench tank. The water in the quench tank provides a gas seal between the TDU's hydrogen atmosphere and the outside air. A scraper mechanism removes decontaminated soil from the quench tank into drums.

After desorption from the soil, the organic contaminants are carried from the TDU to Eco Logic's proprietary gas-phase reduction reactor. In the reactor, the organic contaminants undergo gas-phase chemical reduction reactions with hydrogen at elevated temperatures and ambient pressure. This reaction converts organic and chlorinated organic contaminants into a hydrocarbon-rich gas product. After passing through a scrubber, the gas product's primary components are hydrogen, nitrogen, methane, carbon monoxide, water vapor, and other lighter hydrocarbons. Most of this gas product recirculates into the process, while excess gas can be compressed for later analysis and reuse as supplemental fuel. For further information on the Eco Logic gas-phase chemical reduction process, see the profile in the Demonstration Program section (completed projects).

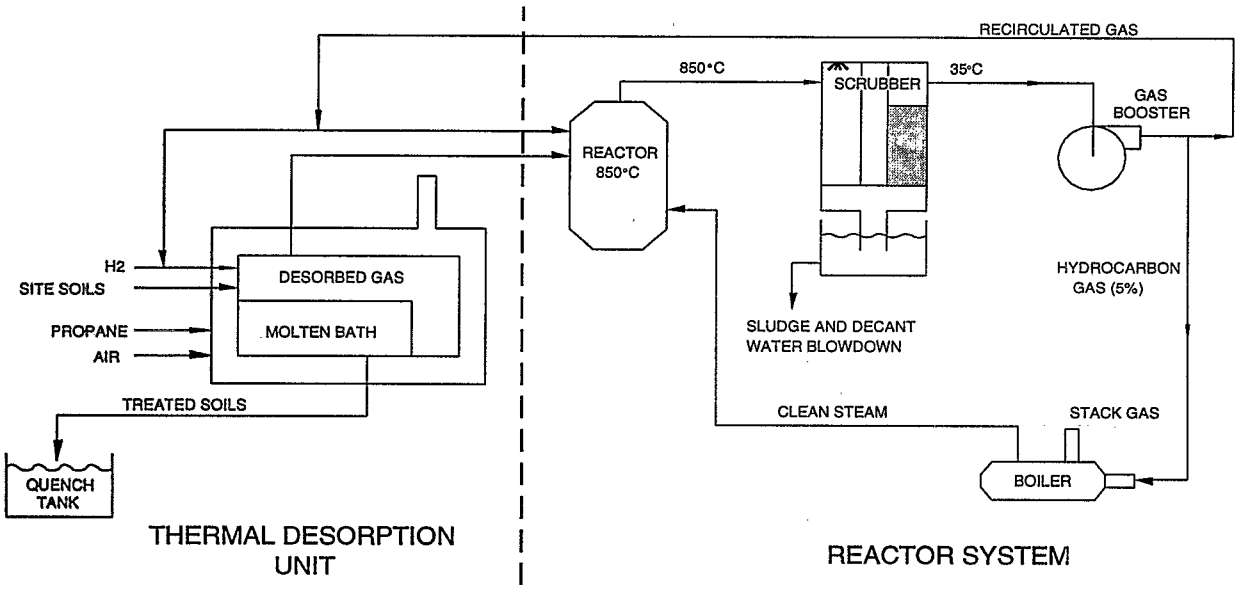

Thermal Desorption Unit

The SITE Program assesses but does not approve or endorse technologies.

WASTE APPLICABILITY:

The Eco Logic TDU, when used with the gas-phase chemical reduction reactor, is designed to desorb soils and sludges contaminated with hazardous organic contaminants such as polychlorinated biphenyls (PCB), polynuclear aromatic hydrocarbons, chlorinated dioxins and dibenzofurans, chlorinated solvents, chlorobenzenes, and chlorophenols. The combined technologies are suited for wastes with high water content since water is a good source of hydrogen.

STATUS:

In October and November 1992, the Eco Logic process, including the TDU, was demonstrated at the Middleground Landfill in Bay City, Michigan, under a Toxic Substances Control Act research and development permit. The Demonstration Bulletin (EPA/540/MR-94/504) and the Applications Analysis Report (EPA/540/AR-94/504) are available from EPA.

Further research and development since the demonstration has focused on optimizing the process for commercial operations and improving the design of the soil and sediment processing unit. According to Eco Logic, the TDU design currently in commercial operation has achieved excellent results, with contaminants in soils and sediments desorbed from high parts per million (ppm) levels to low parts per billion levels.

Two commercial-scale SE25 treatment units are currently in operation: one in Perth, Western Australia, and the other at a General Motors of Canada Ltd (GMCL) facility in Ontario. Both are currently treating a variety of waste matrices including DDT residues and PCBs in soils, oils, electrical equipment, concrete, and other solids. Following the GMCL project, the unit will be relocated to Toronto, Ontario where General Electric (GE) and Eco Logic have a contract to destroy PCB-impacted materials stored aboveground at GE's Lansdowne and Davenport facilities.

Eco Logic also has teamed with Westinghouse Electric to treat chemical warfare agents using the process. Eco Logic has been awarded a contract through the Department of Energy's Morgantown Energy Technology Center for treatment of hazardous wastes, radioactive mixed low-level wastes, and energetics-explosives.

DEMONSTRATION RESULTS:

During the demonstration in Bay City, Michigan, the Eco Logic TDU achieved the following:

- Desorption efficiencies for PCBs from the soil of 93.5 percent in run one and 98.8 percent in run two
- Desorption efficiency for hexachlorobenzene (a tracer compound) from the soil of 72.13 percent in run one and 99.99 percent in run two
- PCB destruction and removal efficiencies of 99.99 percent for the combined TDU and reduction reactor

FOR FURTHER INFORMATION:

EPA PROJECT MANAGER:
Gordon Evans
U.S. EPA
National Risk Management Research Laboratory
26 West Martin Luther King Drive
Cincinnati, OH 45268
513-569-7684
Fax: 513-569-7787

TECHNOLOGY DEVELOPER CONTACT:
Jim Nash
ELI Eco Logic International Inc.
143 Dennis Street
Rockwood, Ontario, Canada N0B 2K0
519-856-9591
Fax: 519-856-9235

The SITE Program assesses but does not approve or endorse technologies.

ENVIROMETAL TECHNOLOGIES INC.
(In Situ and Ex Situ Metal-Enhanced Abiotic Degradation of Dissolved Halogenated Organic Compounds in Groundwater)

TECHNOLOGY DESCRIPTION:

This remedial technology, developed by the University of Waterloo and EnviroMetal Technologies Inc., degrades dissolved halogenated organic compounds in groundwater with an in situ permeable wall containing reactive metal (usually iron) (see photograph below). The technology may also be used in an aboveground reactor for ex situ treatment.

The technology employs an abiotic electrochemical process. Contaminated groundwater passes through the specially prepared granular reactive iron, which oxidizes, inducing reductive dehalogenation of contaminants. Halogenated organics are degraded to nonhazardous substances, preventing contaminants from migrating further downstream. Observed degradation rates are several times higher than those reported for natural abiotic degradation processes.

In most in situ applications of this technology, groundwater moves naturally through the permeable subsurface wall or is directed by flanking impermeable sections such as sheet piles or slurry walls. This passive remediation method is a cost-effective alternative to conventional pump-and-treat methods. Aboveground reactor vessels employing this technology may replace or add to treatment units in conventional pump-and-treat systems.

Process residuals may include dissolved ethane, ethene, methane, hydrogen gas, chloride, and ferrous iron. Because contaminants are degraded to nonhazardous substances and not transferred to another medium, this process eliminates the need for waste treatment or disposal.

WASTE APPLICABILITY:

The process was developed to treat dissolved halogenated organic compounds in groundwater.

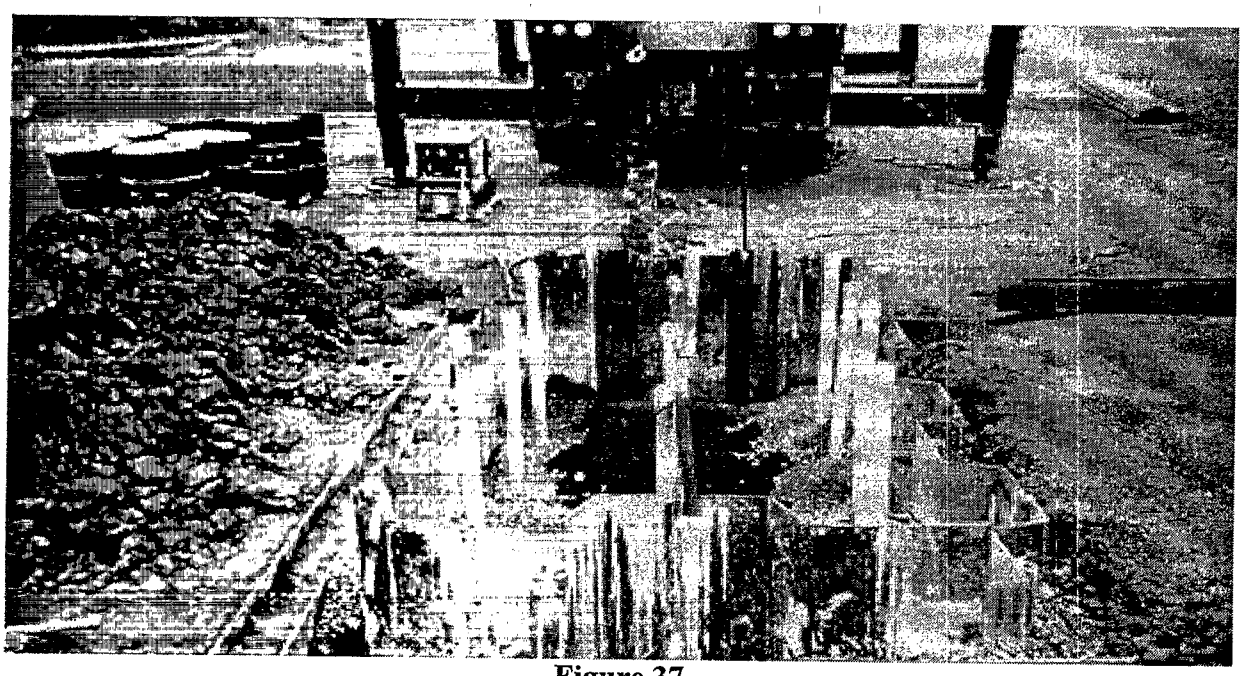

Figure 37

Installation of Pilot-Scale In Situ Treatment System at an Industrial Facility in Northeast United States

The SITE Program assesses but does not approve or endorse technologies.

The technology has degraded a wide variety of chlorinated alkanes and alkenes, including trichloroethene (TCE), tetrachloroethene (PCE), vinyl chloride, 1,1,1-trichloroethane, and 1,2-dichloroethene (DCE). The technology also degrades other organic contaminants, including Freon-113, ethylene dibromide, certain nitroaromatics, and N-nitrosodimethylamine.

This technology was accepted into the SITE Demonstration Program in spring 1993. A pilot-scale demonstration of the aboveground reactor (ex situ) technology took place from November 1994 to February 1995 at an industrial facility in New Jersey. Groundwater at the facility contained dissolved TCE and PCE.

A second SITE demonstration was performed in New York from May through December 1995. A pilot-scale in situ permeable wall was installed in a shallow sand and gravel aquifer containing TCE, DCE, vinyl chloride, and 1,1,1-trichloroethane. This project may eventually be expanded to full-scale.

A successful permeable in situ wall was installed at the Canadian Forces Base Borden test site in June 1991. The technology removed about 90 percent of the TCE and PCE from groundwater passing through the reactive iron wall. The wall has performed consistently for 5 years. More than 400 sites have been identified where the technology could be applied. Over 75 successful bench-scale feasibility tests have been completed using groundwater from industrial and government facilities in the United States and Canada.

The first full-scale commercial in situ installation of this technology was completed at an industrial facility in California in December 1994. Since that time, twelve additional full-scale in situ systems and ten pilot-scale systems have been installed in locations including Colorado, Kansas, North Carolina and Belfast, Northern Ireland. Aboveground treatment systems have been proposed at sites in the U.S. and Germany.

DEMONSTRATION RESULTS:

During the New Jersey (ex situ) demonstration, about 60,833 gallons of groundwater was treated during 13 weeks of sampling. Conversion efficiency of PCE during the demonstration period exceeded 99.9 percent. Vinyl chloride and cis-1,2-dichloroethene occasionally exceeded the New Jersey Department of Environmental Protection limits. This exceedance may have been caused by a reduction in the iron's reactive capacity due to precipitate formation. Complete demonstration results are published in the Technology Capsule and Innovative Technology Evaluation Report (ITER), which is available from EPA.

For the New York (in situ) demonstration, preliminary data indicate a significant reduction in all critical contaminants present, and no apparent decrease in removal efficiency over the seven month demonstration period. Results of the in situ demonstration of the process are published in an ITER that is available from EPA.

FOR FURTHER INFORMATION:

EPA PROJECT MANAGER:
Vince Gallardo
U.S. EPA
National Risk Management Research Laboratory
26 West Martin Luther King Drive
Cincinnati, OH 45268
513-569-7176
Fax: 513-569-7571

TECHNOLOGY DEVELOPER CONTACT:
John Vogan/Stephanie O'Hannesin
EnviroMetal Technologies Inc.
42 Arrow Road
Guelph, Ontario, Canada N1K 1S6
519-824-0432
Fax: 519-763-2378

The SITE Program assesses but does not approve or endorse technologies.

EPOC WATER, INC.
(Precipitation, Microfiltration, and Sludge Dewatering)

TECHNOLOGY DESCRIPTION:

The precipitation, microfiltration, and sludge dewatering treatment uses a combination of processes to treat a variety of wastes. In the first step of the process, heavy metals are chemically precipitated. Precipitates and all particles larger than 0.2 micron are filtered through a unique tubular textile crossflow microfilter (EXXFLOW). The concentrate stream is then dewatered in a filter press of the same material.

EXXFLOW microfilter modules are fabricated from a proprietary tubular woven polyester. Wastes pumped into the polyester tubes form a dynamic membrane, which produces a high quality filtrate and removes all particle sizes larger than 0.2 micron. The flow velocity continually maintains the membrane, maximizing treatment efficiency.

Metals are removed through precipitation by adjusting the pH in the EXXFLOW feed tank. Metal hydroxides or oxides form a dynamic membrane with any other suspended solids. The EXXFLOW concentrate stream, which contains up to 5 percent solids, is then dewatered. A semidry cake, up to 0.25 inch thick, is formed inside the tubular filter. When the discharge valve is opened, rollers on the outside of the tubes move to form a venturi within the tubes. The venturi creates an area of high velocity within the tubes, which aggressively cleans the cloth and discharges the cake in chip form onto a wedge wire screen. Discharge water is recycled to the feed tank. Filter cakes are typically 40 to 60 percent solids by weight.

Constituents other than metals can be removed using seeded slurry methods in EXXFLOW. Hardness can be removed by using lime. Oil and grease can be removed by adding adsorbents. Nonvolatile organics and solvents can be removed using adsorbents, activated carbon, or powdered ion-exchange resins. The EXXFLOW demonstration unit (see photograph below) is

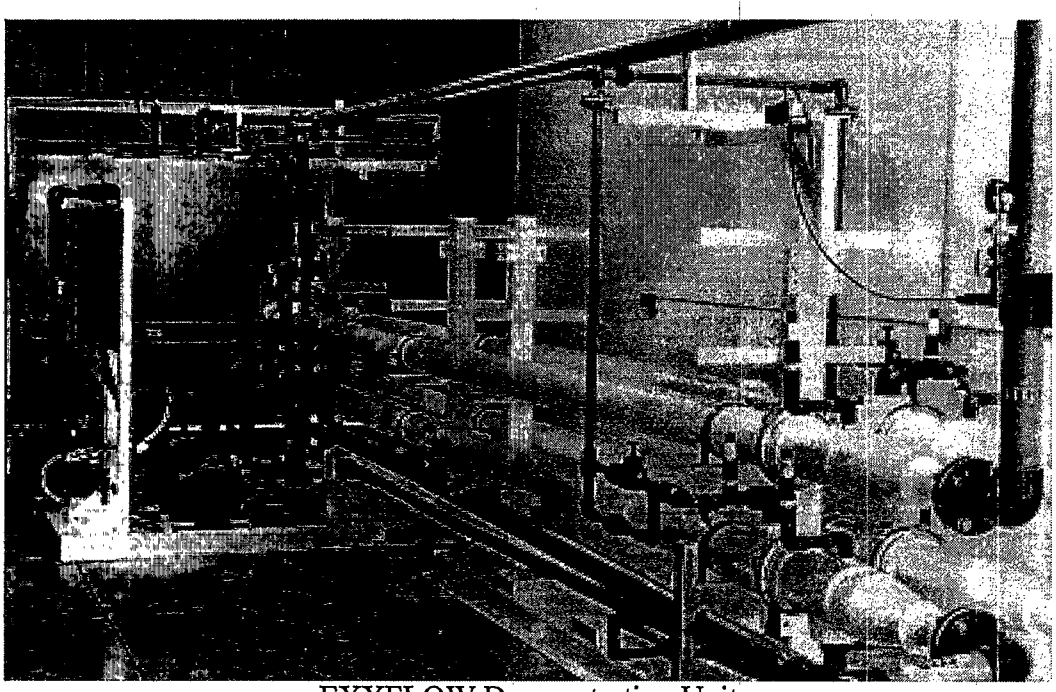

EXXFLOW Demonstration Unit

The SITE Program assesses but does not approve or endorse technologies.

transportable and is mounted on skids. The unit is designed to process approximately 30 pounds of solids per hour and 10 gallons of wastewater per minute.

WASTE APPLICABILITY:

When flocculation and precipitation techniques are used at close to stoichiometric dosing rates, the EXXFLOW technology removes mixed metals, oil and grease, and suspended solids sized at 0.10 micron.

When the EXXFLOW technology operates with finely divided adsorbent powders, it removes contaminants such as isophthalic acid, acetic acid, methyl ethyl ketone, fluorides, and phosphates from effluents generated by semiconductor manufacture. Treated effluents can then be reclaimed for reuse.

STATUS:

This technology was accepted into the SITE Demonstration Program in 1989. Bench-scale tests were conducted in 1990. The SITE demonstration was conducted during May and June 1992 on highly acidic mine drainage from the Old Number 8 mine seep at the Iron Mountain Superfund site in Redding, California. The Demonstration Bulletin (EPA/540/MR-93/513) and the Applications Analysis Report (EPA/540/AR-93/513) are available from EPA.

This technology was commercialized in 1988. Treatment systems have since been installed at over 45 sites worldwide. System capacities range from 1 gallon per minute to over 2 million gallons per day.

DEMONSTRATION RESULTS:

During the SITE demonstration, developer claims for metal removal efficiencies on acid mine drainage, when neutralizing with sodium hydroxide (NaOH) and calcium hydroxide [$Ca(OH)_2$], were generally met or exceeded except for aluminum. This was most likely due to excessive alkalinity (high pH) produced by the added NaOH and $Ca(OH)_2$, which redissolved the aluminum. The claims for all metals, including aluminum, were exceeded when magnesium oxide (MgO) was used as the neutralizing agent. In most cases, no detectable concentrations of heavy metals were present in the permeate samples.

Filter cake produced from the demonstration test contained approximately 12 percent, 31 percent, and 30 percent solids when NaOH, $Ca(OH)_2$, and MgO, respectively, were used as the treatment chemicals. Toxicity characteristic leaching procedure (TCLP) tests performed on the filter cake showed that leachable levels of TCLP metals were below regulatory limits for each treatment chemical tested.

FOR FURTHER INFORMATION:

EPA PROJECT MANAGER:
Jack Hubbard
U.S. EPA
National Risk Management Research Laboratory
26 West Martin Luther King Drive
Cincinnati, OH 45268
513-569-7507
Fax: 513-569-7620

TECHNOLOGY DEVELOPER CONTACT:
Rodney Squires
EPOC Water, Inc.
3065 North Sunnyside
Fresno, CA 93727
209-291-8144
Fax: 209-291-4926

The SITE Program assesses but does not approve or endorse technologies.

FILTER FLOW TECHNOLOGY, INC.
(Colloid Polishing Filter Method®)

TECHNOLOGY DESCRIPTION:

The Colloid Polishing Filter Method® (CPFM®) uses inorganic, oxide-based sorption particles (FF-1000®) and optimized fluidics control to remove ionic, colloidal heavy metals and nontritium radionuclides from water. Beta- and alpha-emitting radionuclides can be treated selectively by modifying the bed formulation. The methodology efficiently removes inorganics from groundwater, pond water, or wastewater based on sorption, chemical and physical properties of the pollutant species, and filtration. The CPFM® is also an efficient heavy metals and radionuclide polishing filter for groundwater and wastewater. Excess solids and total dissolved solids must be removed first, since they overload the beds, resulting in frequent bed backwashing and regeneration cycles and shorter bed lifetimes. Three different types of CPFM® equipment have been designed and successfully tested: (1) vertical plate design beds with FF-1000®sorption bed particles packaged in polymesh bags or filter packs for field applications; (2) small, filter-housing units for processing less than 1,000 gallons of contaminated water; and (3) deep-bed, epoxy-coated, stainless steel and carbon steel tanks equipped with special fluidics controls and bed sluicing ports for continuous processing. The photograph below shows a mobile CPFM® unit.

WASTE APPLICABILITY:

The CPFM® has proved to be effective in removing heavy metals and nontritium radionuclides from water to parts per million or parts per billion levels. The ion exchange/sorption method can be used separately to treat water with low total suspended solids; in a treatment train downstream from other technologies (such as soil washing, organics oxidation; or conventional wastewater treatment).

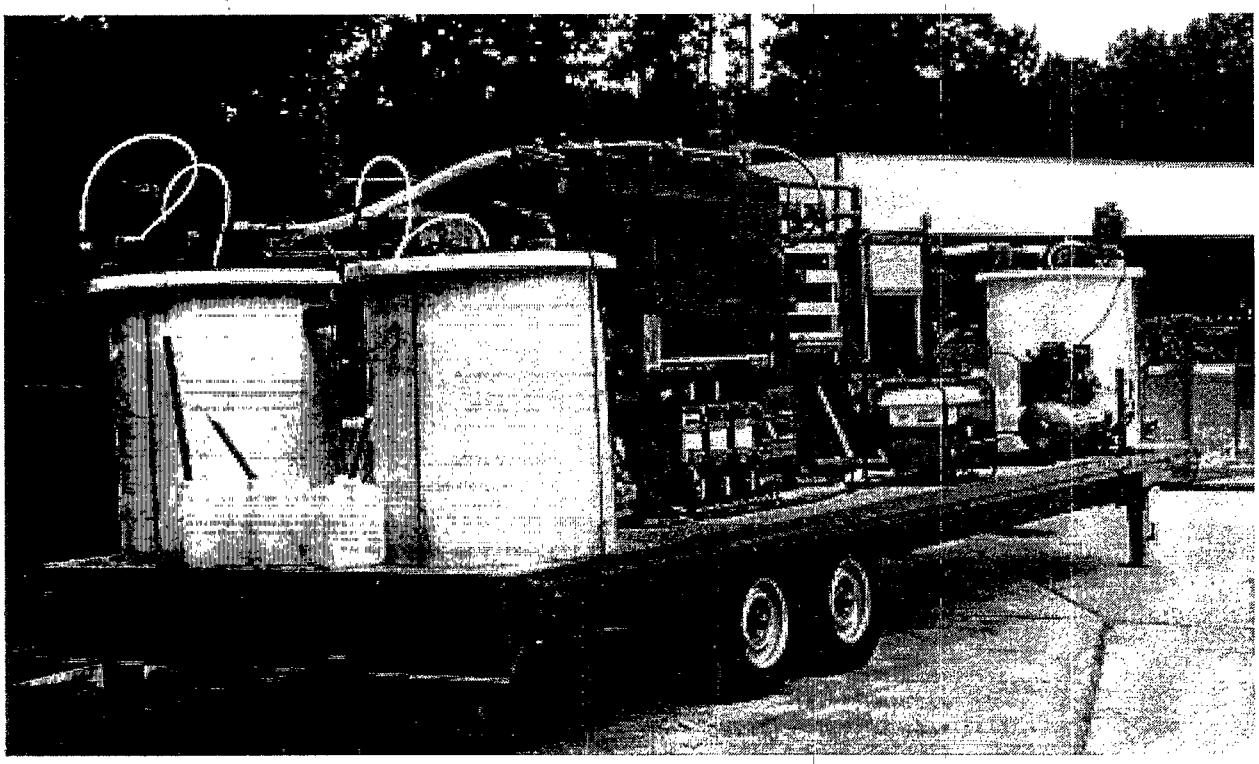

Mobile CPFM® Unit, Including Mixing Tanks, Pumps, Filter Apparatus, and Other Equipment

The SITE Program assesses but does not approve or endorse technologies.

The CPFM®'s major advantages are its high performance; alpha and beta emitter efficiency; and its application to monovalent, divalent, multivalent, and high valence forms existing as colloids, and ionic, chelated, and complexed forms. The same equipment can treat water at different sites, but the preconditioning chemistry and pH must be optimized for each site through bench-scale and field testing.

STATUS:

This technology was accepted into the SITE Demonstration Program in July 1991. EPA and the U.S. Department of Energy (DOE) cosponsored the technology evaluation. The SITE demonstration occurred in September 1993 at DOE's Rocky Flats Plant (RFP) in Denver, Colorado. The Demonstration Bulletin (EPA/540/MR-94/501), Technology Capsule (EPA/540/R-94/501a), and Innovative Technology Evaluation Report (EPA/540/R-94/501) are available from EPA.

The CPFM has been demonstrated independent of the SITE Program at two locations at DOE's Hanford facility, where it removed Strontium-90, Cesium-137, Plutonium-239, and Americium-241 from water at K-Basin and Strontium-90 from groundwater at Site 100N Area (N-Spring). It also has proven to be effective at several other individual sites. A report detailing the results is available from DOE (DOE/RL-95-110).

DEMONSTRATION RESULTS:

During the SITE demonstration, the CPFM® treated about 10,000 gallons of water that contained about 100 micrograms per liter of uranium and 100 picoCuries per liter of gross alpha contamination. The demonstration consisted of three tests. The first test consisted of three 4-hour runs, at a flow rate of about 5 gallons per minute (gpm). For the second test, also run for 4 hours at 5 gpm, the influent water was pretreated with sodium sulfide. The third test was a 15-hour run designed to determine the amount of contamination each filter pack could treat.

The CPFM® system removed up to 95 percent uranium and 94 percent gross alpha contamination. However, due to the significant variation in removal efficiencies between runs, average removal efficiencies were significantly less: 80 percent for uranium and 72 percent for gross alpha. Though removal is largely attributable to the colloid filter pack, uranium was significantly removed in runs one and four before colloid filter treatment. Significant gross alpha was also removed before colloid filter treatment in runs one and three. At less than the maximum removal efficiency, effluent from the CPFM® system did not meet the Colorado Water Quality Control Commission standards for discharge of waters from RFP.

FOR FURTHER INFORMATION:

EPA PROJECT MANAGER:
Annette Gatchett
U.S. EPA
National Risk Management Research Laboratory
26 West Martin Luther King Drive
Cincinnati, OH 45268
513-569-7697
Fax: 513-569-7620

TECHNOLOGY DEVELOPER CONTACT:
Tod Johnson
Filter Flow Technology, Inc.
122 Texas Avenue
League City, TX 77573
281-332-3438
Fax: 281-332-3644

The SITE Program assesses but does not approve or endorse technologies.

FUNDERBURK & ASSOCIATES
(formerly HAZCON, INC.)
(Dechlorination and Immobilization)

TECHNOLOGY DESCRIPTION:

This technology mixes hazardous wastes with cement (or fly ash), water, and one of 18 patented reagents, commonly known as Chloranan, to immobilize heavy metals. The developers also claim that certain chlorinated organics are dechlorinated by the treatment reagents.

Soils, sludges, and sediments can be treated in situ or excavated and treated ex situ. Sediments can be treated under water. In the finished product, immobilized metals have a very low solubility. Ex situ treatment occurs in batches, with volumetric throughput rated at 120 tons per hour. The treatment process begins by adding Chloranan and water to the blending unit (see figure below). Waste is then added and mixed for 2 minutes. Cement or fly ash is added and mixed for a similar time. After 12 hours, the treated material hardens into a concrete-like mass that exhibits unconfined compressive strengths (UCS) ranging from 1,000 to 3,000 pounds per square inch (psi), with permeabilities of 10^{-9} centimeters per second (cm/sec). The hardened concrete-like mass can withstand several hundred freeze and thaw cycles.

WASTE APPLICABILITY:

The technology is applicable to solid wastes containing heavy metals and organics. The developer claims that, since the 1987 SITE demonstration, the technology has been refined to dechlorinate certain chlorinated organics and to immobilize other wastes, including those with high levels of metals. Wastes with organic and inorganic contaminants can be treated together. The process can treat contaminated material with high concentrations (up to 25 percent) of oil.

STATUS:

This technology was accepted into the SITE Demonstration Program in 1987. The process was demonstrated in October 1987 at a former oil processing plant in Douglassville, Pennsylvania.

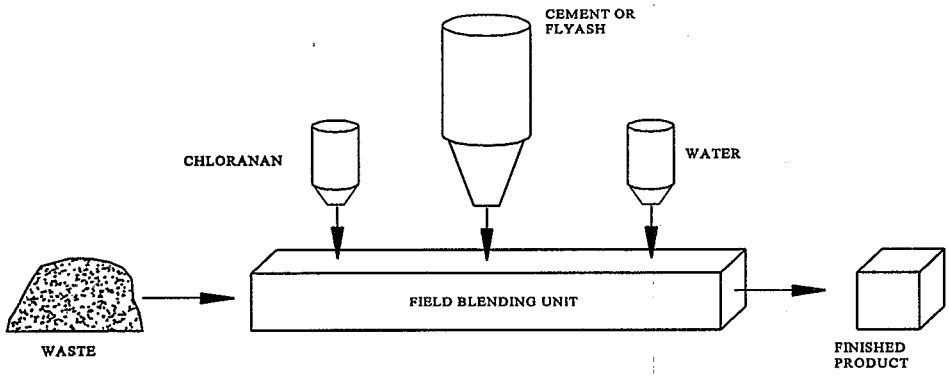

Dechlorination and Immobilization Treatment Process

The SITE Program assesses but does not approve or endorse technologies.

The site soil contained high levels of oil and grease (250,000 parts per million [ppm]) and heavy metals (22,000 ppm lead), and low levels of volatile organic compounds (VOC) (100 ppm) and polychlorinated biphenyls (PCB) (75 ppm). The Applications Analysis Report (EPA/540/A5-89/001) and Technology Evaluation Report (EPA/540/5-89/001a) are available from EPA. A report on long-term monitoring may be also obtained from EPA. The technology has also been used to remediate a California Superfund site with zinc contamination as high as 220,000 ppm.

Since the demonstration in 1987, 17 additional reagent formulations have been developed. These reagents supposedly dechlorinate many chlorinated organics, including PCBs, ethylene dichloride, trichloroethene, and pentachlorophenol.

DEMONSTRATION RESULTS:

For the SITE demonstration, samples were taken after treatment at intervals of 7 days, 28 days, 9 months, and 22 months. Analytical results from these samples were generally favorable. The physical test results indicated a UCS between 220 and 1,570 psi. Low permeabilities (10^{-9} cm/sec) were recorded, and the porosity of the treated wastes was moderate. Durability test results showed no change in physical strength after the wet and dry and freeze and thaw cycles. The waste volume increased by about 120 percent. However, technology refinements now restrict volumetric increases to 15 to 25 percent. Using a smaller volume of additives reduces physical strength, but toxicity reduction is not affected.

The results of the leaching tests were mixed. Toxicity characteristic leaching procedure (TCLP) results for the stabilized wastes showed that concentrations of metals, VOCs, and semivolatile organic compounds (SVOC) were below 1 ppm. Lead concentrations in leachate decreased by a factor of 200 to below 100 parts per billion. VOC and SVOC concentrations in the TCLP leachate were not affected by treatment. Oil and grease concentrations were greater in the treated waste TCLP leachate (4 ppm) than in the untreated waste TCLP leachate (less than 2 ppm).

FOR FURTHER INFORMATION:

EPA PROJECT MANAGER:
Paul dePercin
U.S. EPA
National Risk Management Research Laboratory
26 West Martin Luther King Drive
Cincinnati, OH 45268
513-569-7797
Fax: 513-569-7105
E-Mail: dePercin.Paul@epamail.epa.gov

TECHNOLOGY DEVELOPER CONTACT:
Ray Funderburk
Funderburk & Associates
3312 11th Street
Gulfport, MS 35901
228-868-9915
Fax: 228-868-7637

The SITE Program assesses but does not approve or endorse technologies.

GENERAL ATOMICS
(Circulating Bed Combustor)

TECHNOLOGY DESCRIPTION:

General Atomics' circulating bed combustor (CBC) uses high velocity air to entrain circulating solids and create a highly turbulent combustion zone that destroys toxic hydrocarbons. The commercial-scale, 3-foot combustion chamber can treat up to 150 tons of contaminated soil daily, depending on the heating value of the feed material.

The CBC operates at lower temperatures than conventional incinerators (1,450 to 1,600 °F). The CBC's high turbulence produces a uniform temperature around the combustion chamber and hot cyclone. The CBC also completely mixes the waste material during combustion. Effective mixing and low combustion temperature reduce operating costs and potential emissions of such gases as nitrogen oxide (NO_x) and carbon monoxide (CO). Natural gas, fuel oil, or diesel can be used as auxiliary fuel. No auxiliary fuel is needed for waste streams with a net heating value greater than 2,900 British thermal units per pound.

As shown in the figure below, waste material and limestone are fed into the combustion chamber along with the recirculating bed material. The limestone neutralizes acid gases. A conveyor transports the treated ash out of the system for proper disposal. Hot combustion gases pass through a convective gas cooler and baghouse before they are released to the atmosphere.

WASTE APPLICABILITY:

The CBC process can treat liquids, slurries, solids, and sludges contaminated with corrosives, cyanides, dioxins and furans, inorganics, metals, organics, oxidizers, pesticides, polychlorinated biphenyls (PCB), phenols, and volatile organic compounds. The CBC is permitted under the Toxic Substances Control Act to burn PCBs in all 10 EPA regions, having demonstrated a 99.99 percent destruction removal efficiency (DRE). Applications of the CBC include a variety of industrial wastes and contaminated site materials. Waste feed for the CBC must be sized to less than 1 inch. Metals in the waste do not inhibit performance and become less leachable after

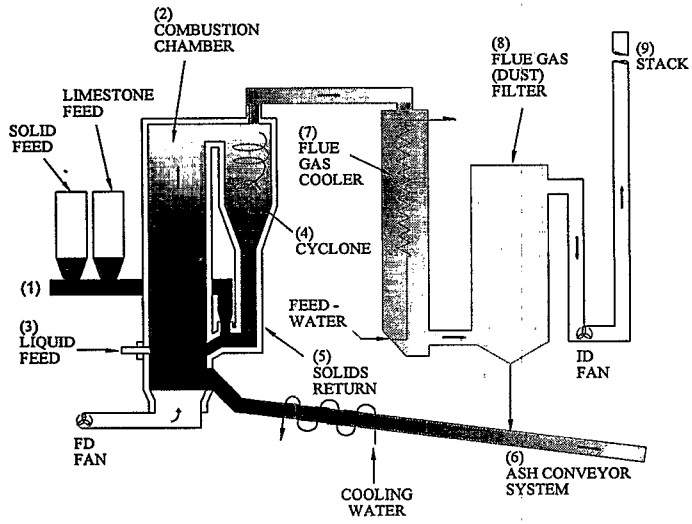

Circulating Bed Combustor (CBC)

The SITE Program assesses but does not approve or endorse technologies.

incineration. Treated residual ash can be replaced on site or stabilized for landfill disposal if metals exceed regulatory limits.

STATUS:

The CBC (formerly owned by Ogden Environmental Services) was accepted into the SITE Demonstration Program in 1986. A treatability study on wastes from the McColl Superfund site in California was conducted under the guidance of the SITE Program, EPA Region 9, and the California Department of Health Services in March 1989. A pilot-scale demonstration was conducted at the General Atomics research facility in San Diego, California using a 16-inch-diameter CBC. The demonstration was conducted on soil from the McColl Superfund Site in Fullerton, California.

Several 3-foot-diameter CBCs have been built and successfully operated. At the Swanson River project in Alaska, over 100,000 tons of PCB-contaminated soil was successfully treated to limits of detection that were far below allowable limits. The process took just over 3 years, from mobilization of the transportable unit to demobilization. The unit operated at over 85 percent availability all year, including winter, when temperatures were below -50 °F. The soil was delisted and returned to the original site. The unit has subsequently been moved to a Canadian site.Another unit of similar size treated soils contaminated with #6 fuel oil. Over 14,000 tons of soil was successfully treated and delisted.

Upon completion, the site was upgraded to permit operation as a merchant facility treating a wide range of materials from leaking underground fuel tanks at other sites. Two other units of the same size have been constructed in Germany for treatment of munitions wastes consisting of slurried explosives and propellant. These units have been operational since early 1995 and have been permitted under stringent German regulations.

DEMONSTRATION RESULTS:

During the SITE demonstration, the CBC performed as follows:

- Achieved DRE values of 99.99 percent or greater for principal organic hazardous constituents
- Minimized formation of products of incomplete combustion
- Met research facility permit conditions and California South Coast Basin emission standards
- Controlled sulfur oxide emissions by adding limestone and residual materials (fly ash and bed ash); these emissions were nonhazardous. No significant levels of hazardous organic compounds were found in the system, the stack gas, or the bed and fly ash.
- Minimized emissions of sulfur oxide, NO_x, and particulates. Other regulated pollutants were controlled to well below permit levels.

FOR FURTHER INFORMATION:

EPA PROJECT MANAGER:
Douglas Grosse, U.S. EPA
National Risk Management Research Laboratory
26 West Martin Luther King Drive
Cincinnati, OH 45268
513-569-7844 Fax: 513-569-7585

TECHNOLOGY DEVELOPER CONTACT:
Dan Jensen, General Atomics
P.O. Box 85608
3550 General Atomics Court
San Diego, CA 92186-9784
619-455-4458 Fax: 619-455-4111

The SITE Program assesses but does not approve or endorse technologies.

GEO-CON, INC.
(In Situ Solidification and Stabilization Process)

TECHNOLOGY DESCRIPTION:

The in situ solidification and stabilization process immobilizes organic and inorganic compounds in wet or dry soils, using reagents (additives) to produce a cement-like mass. The basic components of this technology are (1) Geo-Con, Inc.'s (Geo-Con), deep soil mixing (DSM) system, to deliver and mix the chemicals with the soil in situ; and (2) a batch mixing plant to supply proprietary additives (see figure below).

The proprietary additives generate a complex, crystalline, connective network of inorganic polymers in a two-phase reaction. In the first phase, contaminants are complexed in a fast-acting reaction. In the second phase, macromolecules build over a long period of time in a slow-acting reaction.

The DSM system involves mechanical mixing and injection. The system consists of one set of cutting blades and two sets of mixing blades attached to a vertical drive auger, which rotates at approximately 15 revolutions per minute. Two conduits in the auger inject the additive slurry and supplemental water. Additives are injected on the downstroke; the slurry is further mixed upon auger withdrawal. The treated soil columns are 36 inches in diameter and are positioned in an overlapping pattern of alternating primary and secondary soil columns.

WASTE APPLICABILITY:

The process treats soils, sediments, and sludge-pond bottoms contaminated with organic compounds and metals. The process has been laboratory-tested on soils containing polychlorinated biphenyls (PCB), pentachlorophenol, refinery wastes, and chlorinated and nitrated hydrocarbons.

STATUS:

A SITE demonstration was conducted as a joint effort between International Waste Technologies (IWT) and Geo-Con. The demonstration was conducted at the General Electric Service Shop site in Hialeah, Florida in April 1988. IWT provided the treatment reagent, specifically the proprietary additive (HWT-20), and Geo-Con provided both engineering and hardware for the in situ soil treatment. Two 10-by-20-foot areas were treated — one to a depth of 18 feet, and the other to a depth of 14 feet. Ten months after the demonstration, long-term monitoring tests were performed on the treated sectors. A four-auger

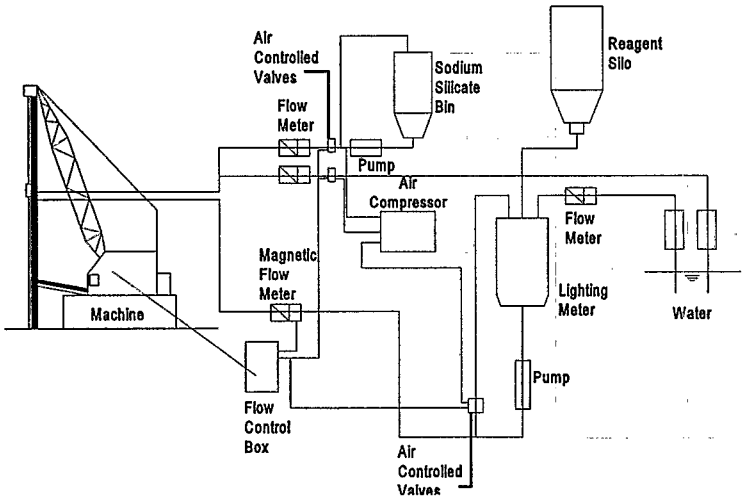

In Situ Solidification and Stabilization Process Flow Diagram

The SITE Program assesses but does not approve or endorse technologies.

process was later used to remediate the PCB-contaminated Hialeah site during the winter and spring of 1990. Cooperative efforts between Geo-Con and IWT ended with the remediation of the Hialeah site.

Presently, Geo-Con offers the entire in situ stabilization package, including the treatment chemicals. Geo-Con has used the process to complete over 40 in situ stabilization projects throughout the United States. Significant projects completed to date include the following:

- Construction of a 110,000-square-foot, 60-foot-deep, soil-bentonite DSM wall to contain contaminated groundwater from a former waste pond. All DSM permeabilities were less than 10^{-7} centimeters per second (cm/s).
- Shallow soil mixing and stabilization of 82,000 cubic yards of contaminated soils at a former manufactured gas plant site. The site was declared clean and ultimately converted to a city park.

The DSM system augers have been scaled up to diameters as large as 12 feet. To date, Geo-Con has used this process to treat over 1 million cubic yards of contaminated soils and sludges.

DEMONSTRATION RESULTS:

The SITE demonstration yielded the following results:

- PCB immobilization appeared likely, but could not be confirmed because of low PCB concentrations in the untreated soil. Leachate tests on treated and untreated soil samples showed mostly undetectable PCB levels. Leachate tests performed 1 year later on treated soil samples showed no increase in PCB concentrations, indicating immobilization.
- Data were insufficient to evaluate the system's performance on other organic compounds and metals.
- Each test sample showed high unconfined compressive strength (UCS), low permeability, and low porosity. These physical properties improved in samples retested 1 year later, indicating the potential for long-term durability.
- Bulk density of the soil increased 21 percent after treatment. This treatment increased the treated soil volume by 8.5 percent and caused a small ground rise of 1 inch per foot of treated soil.
- The UCS of treated soil was satisfactory, with values up to 1,500 pounds per square inch.
- The permeability of the treated soil was satisfactory, decreasing to 10^{-6} and 10^{-7} cm/s compared to 10^{-2} cm/s for untreated soil.
- Data were insufficient to confirm immobilization of volatile and semivolatile organics. This may be due to organophilic clays present in the reagent.
- Process costs were $194 per ton for the 1-auger machine used in the demonstration, and $111 per ton for a commercial four-auger operation. More recent experience with larger scale equipment reduced process costs to about $15 per ton plus the cost of reagents. The Technology Evaluation Report (EPA/540/5-89/004a) and the Applications Analysis Report (EPA/540/A5-89/004) are available from EPA.

FOR FURTHER INFORMATION:

TECHNOLOGY DEVELOPER CONTACT:
Stephen McCann
Geo-Con, Inc.
4075 Monroeville Boulevard
Corporate One, Building II, Suite 400
Monroeville, PA 15146
412-856-7700
Fax: 412-373-3357

The SITE Program assesses but does not approve or endorse technologies.

GEOSAFE CORPORATION
(GeoMelt Vitrification, previously In Situ Vitrification)

TECHNOLOGY DESCRIPTION:

Geosafe Corporation's (Geosafe) GeoMelt vitrification process uses electricity to melt soil or other earthen materials at temperatures of 1600 to 2000 °C, destroying organic pollutants by pyrolysis. Inorganic pollutants are immobilized within the vitrified glass and monolith. Water vapor and organic pyrolysis products are captured in a hood, which draws the off-gases into a treatment system that removes particulates, acid gases and other pollutants.

The process can be applied to materials in situ, or where staged below grade or ex situ. By the addition of feeding and melt withdrawal fewtures, the process can be operated semi-continuosly. To begin the vitrification process, an array of large electrode pairs is inserted into contaminated zones containing enough soil for melting to occur (see photograph below). A graphite starter path is used to melt the adjacent soil, which then becomes the primary current-carrying medium for further processing. As power is applied, the melting continues downward and outward at an average rate of 4 to 6 tons per hour, or 1 to 2 inches per hour. The electrode array is lowered progressively, as the melt grows to the desired treatment depth. After cooling, a vitrified monolith with a glass and microcrystalline structure remains. This monolith possesses high strength and excellent weathering and leaching properties.

The melting process is performed under a hood through which air flow is controlled to maintain a negative pressure. Excess oxygen is supplied for combustion of any organic pyrolysis products. Off-gases are treated by quenching, pH-controlled scrubbing, dewatering (mist elimination), heating (for dew point control), particulate filtration, and either activated carbon adsorption or thermal oxidation as a final off-gas polishing step. Individual melt settings may encompass a total melt mass of up to 1,400 tons, a maximum width of 40 feet, and depths as great as 22 feet. Special settings to reach deeper contamination are also possible. Void volume and volatile material removal results in a 30 to 50 percent volume reduction for typical soils.

The mobile GeoMelt system is mounted on three semi-trailers. Electric power may be provided by local utility or on-site diesel generator. Typical

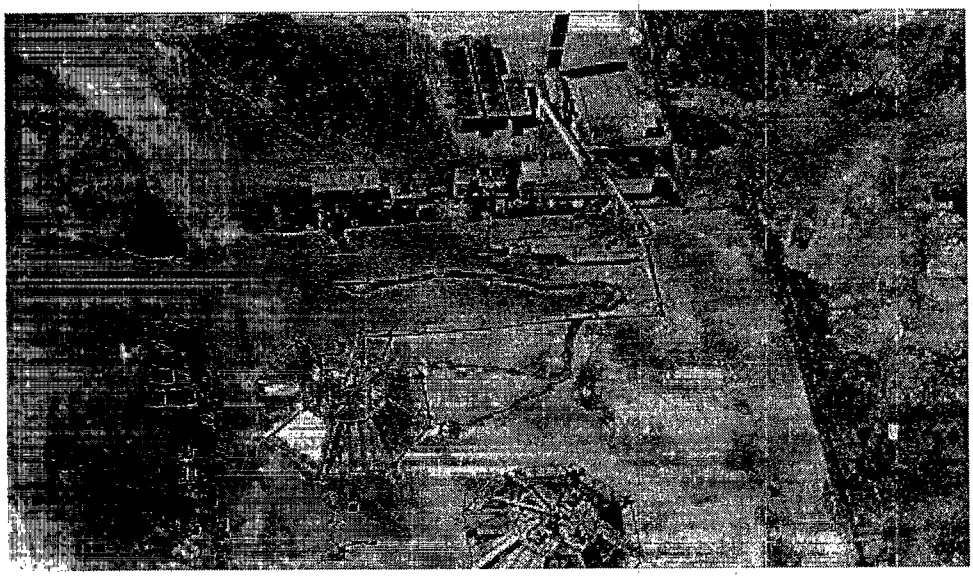

In Situ Vitrification Process Equipment

The SITE Program assesses but does not approve or endorse technologies.

power consumption ranges from 600 to 800 kilowatt-hours per ton of soil. The electrical supply system has an isolated ground circuit to provide safety.

WASTE APPLICABILITY:

The GeoMelt vitrification process can destroy or remove organics and immobilize most inorganics in contaminated soils, sediments, sludges, or other earthen materials. The process has been tested on a broad range of volatile and semivolatile organic compounds, other organics including dioxins and polychlorinated biphenyls (PCB), and on most priority pollutant metals and heavy metal radio-nuclides. The process can also treat large amounts of debris and waste materials present in soil. In addition to soils applications, the process has been used to treat mixed-transuranic (TRU) buried waste and underground tanks containing waste. Underground tank treatment employs a new method of vertically planar melting which enable sidewards melting rather than top-down melting. Tanks to 4,500 gallons have been treated to date.

STATUS:

The SITE demonstration of the process occurred during March and April 1994 at the former Parsons Chemical (Parsons) site in Grand Ledge, Michigan. The soil at Parsons was contaminated with pesticides, metals, and low levels of dioxins. The Innovative Technology Evaluation Report (EPA/540/R-94/520) and the Demonstration Bulletin (EPA/540/MR-94/520) are available from EPA.

In October 1995, Geosafe was issued a National Toxic Substances Control Act permit for the treatment of soils contaminated with up to 17,860 parts per million PCBs.

In December 1995, Geosafe completed the remediation of the Wasatch Chemical Superfund Site in Salt Lake City, Utah. This site contained about 6,000 tons of dioxin, pentachlorophenol, herbicide, pesticide, and other organic contaminants in soil containing up to 30 percent debris by weight. In 1996, Geosafe completed remediation of the Apparatus Service Shop Site in Spokane, Washington. A total of 6,500 tons of PCB-contaminated soil was treated at the site. GeoMelt vitirification is currently being employed for the in situ treatment of mixed-TRU buried waste at the Maralinga Test Range in South Australia. Twenty-one pits containing Plutonium, Uranium, Lead, Barium, and Beryllium are being treated there. That project will be completed in 1999.

DEMONSTRATION RESULTS:

During the SITE demonstration, about 330 cubic yards of a saturated clayey soil was vitrified in 10 days. This is the equivalent to a production rate of 53 tons per day. The technology met cleanup levels specified by EPA Region 5 for chlordane, 4,4-dichlorodiphe-nyltrichloroethane, dieldrin, and mercury. Pesticide concentrations were nondetectible in the vitrified soil. Results also indicated that leachable mercury was below the regulatory guidelines (40 CFR Part 261.64), and no target pesticides were detected in the leachate. No target pesticides were detected in the stack gas samples, and metal emissions were below regulatory requirements. Continuous emission monitoring showed that total hydrocarbon and carbon monoxide emissions were within EPA Region 5 limits.

FOR FURTHER INFORMATION:

EPA PROJECT MANAGER:
Teri Richardson, U.S. EPA
National Risk Management Research Laboratory
26 West Martin Luther King Drive
Cincinnati, OH 45268
513-569-7949
Fax: 513-569-7105

TECHNOLOGY DEVELOPER CONTACTS:
James Hansen or Matthew Haass
Geosafe Corporation
2952 George Washington Way
Richland, WA 99352-1615
509-375-0710
Fax: 509-375-7721
E-Mail: geosafe@oneworld.out.com

The SITE Program assesses but does not approve or endorse technologies.

GEOTECH DEVELOPMENT CORPORATION
(Cold Top Ex-Situ Vitrification of Chromium-Contaminated Soils)

TECHNOLOGY DESCRIPTION:

The Geotech Cold Top technology is an ex-situ vitrification process designed to transform metal-contaminated soils into a nonleachable product. The primary component of the technology is a water-cooled, double-walled, steel vessel or furnace with submerged-electrode resistance heating. The furnace and associated equipment are capable of attaining a melting temperature of up to 5,200 °F.

The furnace is initially charged with a mixture of sand and alumina/silica clay. Through electrical resistance heating, a molten pool forms; the voltage to the furnace is properly adjusted; and, finally, contaminated soil is fed into the furnace by a screw conveyor. When the desired soil melt temperature is achieved, the furnace plug from below the molten product tap is removed. As the soil melts, the outflow is poured into refractory-lined and insulated molds for slow cooling, and additional soil is added to the furnace to maintain a "cold top." Excess material can be discharged to a water sluice for immediate cooling and collection before off-site disposal.

Geotech Development Corporation (Geotech) claims that the Cold Top Vitrification process converts quantities of contaminated soil from a large number of particles into an essentially monolithic, vitrified mass. According to Geotech, vitrification transforms the physical state of contaminated soil from assorted crystalline matrices to a glassy, amorphous solid state comprised of interlaced polymeric chains. These chains typically consist of alternating oxygen and silicon atoms. It is expected that chromium can readily substitute for silicon in the chains. According to Geotech, such chromium should be immobile to leaching by aqueous solvents and, therefore, biologically unavailable and nontoxic.

WASTE APPLICABILITY:

According to Geotech, the Cold Top Vitrification process has been used to treat soils contaminated with hazardous heavy metals such as lead, cadmium, and chromium; asbestos and asbestos-containing materials; and municipal solid waste combustor ash residue. Geotech claims that radioactive wastes can also be treated by this

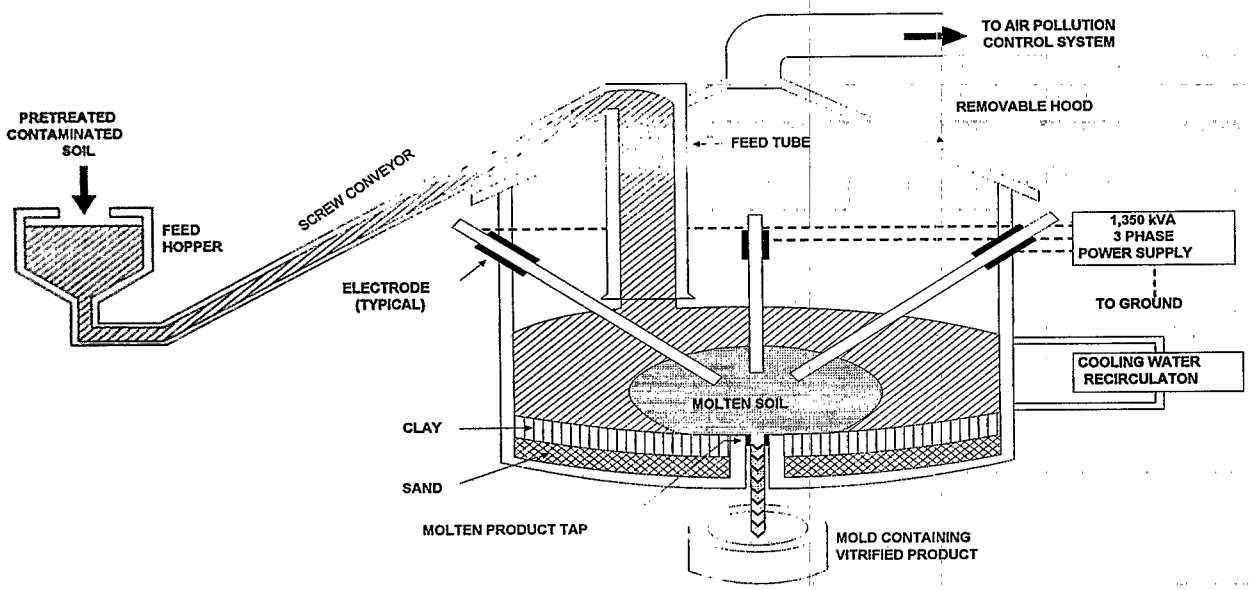

Cold Top Ex-Situ Vitrification Technology

The SITE Program assesses but does not approve or endorse technologies.

technology. All waste material must be reduced in size to less than 0.25 inches in diameter. The Cold Top Vitrification process is most efficient when feed materials have been dewatered to less than 5 percent water and organic chemical concentrations have been minimized. Some wastes may require the addition of carbon and sand to ensure that the vitrification process produces a glass-like product. Geotech claims that the vitrified product can have many uses, including shore erosion blocks, decorative tiles, road-bed fill, and cement or blacktop aggregate.

STATUS:

This technology was accepted into the SITE Demonstration Program in December 1994. In February and March, 1997, this process was demonstrated at Geotech's pilot plant in Niagara Falls, New York. Approximately 10,000 pounds of chromium-contaminated soil from two New Jersey-Superfund sites in the Jersey City area were collected crushed, sieved, dried, mixed with carbon and sand, and shipped to the Geotech plant. The SITE demonstration consisted of one vitrification test run on soil from each site.

DEMONSTRATION RESULTS:

The demonstration results indicate that the Cold Top Vitrification process reduced the concentration of leachable chromium to meet the Resource Conservation and Recovery Act (RCRA) toxicity characteristic leaching procedure (TCLP) total chromium standard. For example, concentrations of 29 and 58 mg/L of TCLP chromium in feed soils were reduced to 1.0 and 0.31 mg/L, respectively, in vitrified products. Field observations and measurements made during the demonstration indicate that several operational issues must be addressed during technology scale-up. First, a consistent and controlled feed system needs to be developed that spreads the waste uniformly over the surface of the molten soil. This feed system must also minimize dust generation. Second, an emission control system needs to be configured to control particulate and gaseous emissions from the furnace and feed system.

The SITE Demonstration Bulletin (EPA/540/HR-97/506) and Technology Capsule (EPA/540/R-97/506a) are available from EPA. Geotech owns a 50-ton-per-day Cold Top Vitrification pilot plant in Niagara Falls, New York. This facility has been used for over 38 research and customer demonstrations, including the SITE demonstration. Geotech has built or assisted with the construction or upgrading of more than five operating vitrification plants. Geotech has tentative plans to build a commercial Colt Top Vitrification facility within 50 miles of the New Jersey sites. The planned capacity of this facility is 300 tons per day. The facility will be designed to receive, dry, vitrify, and dispose of vitrified product from the chromium sites and municipal solid waste incinerators, as well as other producers of hazardous and nonhazardous waste.

FOR FURTHER INFORMATION:

EPA PROJECT MANAGER:
Marta K. Richards
U.S. EPA
National Risk Management Research Laboratory
26 West Martin Luther King Drive
Cincinnati, OH 45268
513-569-7692
Fax: 513-569-7676

TECHNOLOGY DEVELOPER CONTACTS:
Thomas Tate, President
Geotech Development Corporation
1150 First Avenue, Suite 630
King of Prussia, PA 19406
610-337-8515
Fax: 610-768-5244

William Librizzi
Hazardous Substance Management Research Center
New Jersey Institute of Technology
138 Warren Street Newark, NJ 07102
973-596-5846
Fax: 973-802-1946

The SITE Program assesses but does not approve or endorse technologies.

GIS\SOLUTIONS, INC.
(GIS\Key™ Environmental Data Management System)

TECHNOLOGY DESCRIPTION:

GIS\Key™ v.3.0 is a comprehensive environmental database management system that integrates site data and graphics, enabling the user to create geologic cross-sections, boring logs, potentiometric maps, isopleth maps, structure maps, summary tables, hydrographs, chemical time series graphs, and numerous other maps and line graphs (see table below). The software is networkable, multi-user, 32 bit and year 2000 compliant. It is menu-driven, making it relatively simple to use. All system outputs meet Resource Conservation and Recovery Act (RCRA) and Comprehensive Environmental Response, Compensation, and Liability Act (CERCLA) reporting requirements and are consistent with current industry practices.

In addition to complete integration between data and graphics, GIS\Key™ v.3.0 integrates different data types, allowing swift production of complex graphics such as geo-chemical cross sections and flux graphics.

GIS\Key™ v.3.0 stores and independently manages metadata (such as maps, graphs, reports, boring logs and sections) from multiple sites. Metadata is geocoded, stored separately from a facility's source data and retrieved by performance of a spatial query. Metadata from a facility may be retrieved, viewed and studied independently or combined with metadata from other facilities for multi-site management.

The GIS\Key™ software can directly export data into the leading three-dimensional visualization systems. These systems produce three-dimensional contaminant plume models and groundwater flow models as well as fence diagrams. GIS\Key™ includes audit or transaction logging capabilities for source data as well as metadata.

The GIS\Key™ v3.0 also employs two new project management and data navigation tools called Scout™ and Smart Query™. Scout™ helps users find and access existing projects, start new projects, browse data and initiate queries that result in reports, maps, and other graphics.

CHEMISTRY	GEOLOGY	HYDROLOGY
• Isopleth maps of soil or water quality (plan or section view) • Graphs - Time series graphs - Chemical versus chemical and inter-well and intra-well - Concentration versus position - Summary of statistics • Trilinear Piper & Stiff diagrams • User alerts - When QA/QC results fall outside data quality objectives - When sample results fall outside historical ranges - When sample results exceed applicable regulatory standards • Sample Tracking; Electronic Lab Interface • Presentation-quality data tables	• Completely customizable boring logs • Geologic cross-section maps • Isopach maps • Structure maps • Presentation-quality data tables **ALL MODULES:** • GIS\Key Scout™ Interface • Independent management of metadata • Multi-site management capability • Integration between data types • Smart Query™ Data Retrieval • 3D Modeling, Statistics, GIS Integration	• Density-corrected water level, floating product, hydraulic conductivity, and contour maps • Water elevation and floating product thickness versus time graphs • Flow versus time and chemical flux graphs • Presentation-quality data tables **SYSTEM REQUIREMENTS:** • Hardware: Pentium Class PC 32 MB RAM • Operating System: Windows 95/98 or Windows NT

GIS\Key™ Environmental Data Management System Outputs

The SITE Program assesses but does not approve or endorse technologies.

Scout™ also manages data security and multi-user network installations of GIS\Key™ v.3.0. Smart Query™ is a data "drill down" tool which helps users set conditions on project data, displays data meeting those conditions, then creates desired output. GIS\Key™ v3.0 also has new modules for radiological chemistry and RCRA Statistics. Site data related to ecological assessment and air emissions is not managed by this system.

The GIS\Key™ software can be used at any Superfund site to facilitate the collection, reporting, and analysis of site data. The software is designed with numerous checks to assure the quality of the data, including comprehensive quality assurance/quality control protocols. System outputs, listed in the table below, are presentation-quality and meet RCRA and CERCLA reporting requirements. GIS\Key™ software provides a three level data validation system which includes 1) sample tracking by custody, sample ID and/or date and time, 2) an electronic laboratory import program that immediately finds, and helps the user fix, quality control (QC) problems with the laboratory data delivery and 3) a series of "User Alert" reports which find data thst falls outside of project QC objectives, historical data ranges, or above federal, state, and local or project specific action levels.

STATUS:

This technology was accepted into the SITE Demonstration Program in summer 1992. The demonstration was held in August 1993 in San Francisco, California, and December 1993 in Washington, DC. The Demonstration Bulletin (EPA/540/MR-94/505), Technology Capsule (EPA/540/SR-94/505), Innovative Technology Evaluation Report (EPA/540/R-94/505), and project videotape are available from EPA.

DEMONSTRATION RESULTS:

The GIS\Key™ software is in use at several Superfund sites including the Crazyhorse site near Salinas, Califonia, and the Moffett Field site near San Jose, California. The U.S. AirForce's Environmental Data Management and Decision Support working group has successfully tested the effectiveness of the GIS\Key™ technology at Norton Air Force Base in California. The technology is also being used by consultants at over 30 other U.S. Air Force and Department of Energy facilities.

Results from the SITE demonstration indicated that the GIS\Key™ software generated the four types of contour maps necessary to assist in groundwater mapping: hydrogeologic maps, chemical concentration isopleths, geologic structure maps, and geologic structure thickness isopach maps. Several advanced chemistry reports and construction and borehole summary tables were also automatically prepared using customized GIS\Key™ menu commands. The system automated well and borehole logs based on the information contained in the database. GIS\Key™ provided several editable reference lists, including a list of regulatory thresholds, test methods, and a list of chemical names, aliases, and registry numbers. The GIS\Key™ database menu provided commands for electronic database import and export. Any of the database files used by GIS\Key™ can be used with the general import and export commands available in the database menu.

FOR FURTHER INFORMATION:

EPA PROJECT MANAGER:
Richard Eilers
U.S. EPA
National Risk Management Research Laboratory
26 West Martin Luther King Drive
Cincinnati, OH 45268
513-569-7809
Fax: 513-569-7111

TECHNOLOGY DEVELOPER CONTACT:
Lawrence S. Eytel
GIS\Solutions, Inc.
1800 Sutter Street
Suite 830
Concord, CA 94520
925-827-5400 x 207
Fax: 925-827-5467
E-mail: sales@giskey.com
Internet: http ://www.giskey.com

The SITE Program assesses but does not approve or endorse technologies.

GRACE BIOREMEDIATION TECHNOLOGIES
(DARAMEND™ Bioremediation Technology)

TECHNOLOGY DESCRIPTION:

The GRACE Bioremediation Technologies organic amendment-enhanced bioremediation technology (DARAMEND™) is designed to degrade many organic contaminants in industrial soils and sediments, including pentachlorophenol (PCP), polynuclear aromatic hydrocarbons (PAH), and petroleum hydrocarbons. The technology has been applied both in situ and ex situ. In either case, soil may be treated in lifts up to 2 feet deep using available mixing equipment. The technology may also be applied ex situ, as a biopile.

The technology treats batches of soil using DARAMEND™ soil amendments. These amendments are introduced using conventional agricultural equipment (see photograph below), followed by regular tilling and irrigation. DARAMEND™ soil amendments are solid-phase products prepared from natural organic materials to have soil-specific particle size distribution, nutrient content, and nutrient releases kinetics. Soil amendments sharply increase the ability of the soil matrix to supply water and nutrients to the microorganisms that degrade the hazardous compounds. The amendments can also transiently bind contaminants, reducing the acute toxicity of the soil aqueous phase. This reduction allows microorganisms to survive in soils containing very high concentrations of toxic compounds.

DARAMEND™ treatment involves three fundamental steps. First, the treatment area is prepared. For the ex situ application, a lined treatment cell is constructed. In situ application requires the treatment area to be cleared and ripped to reduce soil compaction. Second, the soil is pretreated; this includes removing debris larger than 4 inches, such as metal or rocks, that may damage the tilling equipment. Sediments under-going treatment must be dewatered. And third, the DARAMEND™ soil amendment is incorporated, usually at 1 percent to 5 percent by weight, followed by regular tilling and irrigating.

Soil is tilled with a rotary tiller to reduce variation in soil properties and contaminant concentrations. Tilling also incorporates the required soil amendments and helps deliver oxygen to contaminant-degrading microorganisms.

An irrigation system is used to maintain soil moisture in the desired range. If the treatment area is not covered, leachate or surface runoff

DARAMEND™ Bioremediation Technology

The SITE Program assesses but does not approve or endorse technologies.

caused by heavy precipitation is collected and reapplied to the soil as needed.

Equipment needed to implement this technology includes a rotary tiller, irrigation equipment, and excavation and screening equipment. Depending on site-specific factors such as contaminant type and initial concentration, and project schedule and climate, a waterproof cover may be constructed over the treatment area.

WASTE APPLICABILITY:

The DARAMEND™ technology can treat soil, sediment, and other solid wastes such as lagoon sludge. These matrices may be contaminated by a wide range of organic compounds including, but not limited to, PAHs, PCP, petroleum hydrocarbons, and phthalates. Matrices of lead, manganese, and zinc have been effectively treated with the DARAMEND™ technology.

This technology was accepted into the SITE Demonstration Program in spring 1993. The ex situ application of the technology was demonstrated from fall 1993 to summer 1994 at the Domtar Wood Preserving facility in Trenton, Ontario, Canada. The demonstration was one component of a 5,000-ton remediation project underway at the site.

Currently, the DARAMEND™ technology has received regulatory approval, and has been applied at field-scale at five sites in the United States. These sites include the full-scale treatment of PCP impacted soil in Montana, Washington, and Wisconsin, the full-scale treatment of phthalate impacted soil in New Jersey and a pilot-scale demonstration of toxaphene impacted soil in South Carolina. In addition, the technology has been applied at a number of Canadian sites including a 2,500 tonne biopile in New Brunswick, and two pilot-scale projects targeting pesticides and herbicides in Ontario. The first full-scale application to soil containing organic explosives is scheduled for late 1998.

DEMONSTRATION RESULTS:

In the ex situ demonstration area, the DARAMEND™ technology achieved the following overall reductions: PAHs, 94 percent (1,710 milligram/kilogram [mg/kg] to 98 mg/kg); chlorophenols, 96 percent (352 mg/kg to 13.6 mg/kg); and total petroleum hydrocarbons (TPH), 87 percent. These reductions were achieved in 254 days of treatment, including winter days when no activity occurred because of low soil temperatures. The control area showed a reduction of 41 percent in PAH concentrations; no reduction was seen in the concentration of either chlorinated phenols or TPH during the treatment time. Results from the toxicity analysis (earthworm mortality and seed germination) showed that the toxicity was eliminated or greatly reduced in the treated soil.

FOR FURTHER INFORMATION:

EPA PROJECT MANAGER:
Teri Richardson
U.S. EPA
National Risk Management Research Laboratory
26 West Martin Luther King Drive
Cincinnati, OH 45268
513-569-7949
Fax: 513-569-7105

TECHNOLOGY DEVELOPER CONTACTS:
Alan Seech or David Raymond
GRACE Bioremediation Technologies
3465 Semenyk Court, 2nd floor
Mississauga, Ontario
Canada L5C 4Pg
905-273-5374
Fax: 905-273-4367

The SITE Program assesses but does not approve or endorse technologies.

GRUPPO ITALIMPRESSE
(developed by SHIRCO INFRARED SYSTEMS, INC.)
(Infrared Thermal Destruction)

TECHNOLOGY DESCRIPTION:

The infrared thermal destruction technology is a mobile thermal processing system that uses electrically powered silicon carbide rods to heat organic wastes to combustion temperatures. Any remaining combustibles are incinerated in an afterburner. One configuration for this mobile system (see figure below) consists of four components: (1) an electric-powered infrared primary chamber; (2) a gas-fired secondary combustion chamber; (3) an emissions control system; and (4) a control center.

Waste is fed into the primary chamber and exposed to infrared radiant heat (up to 1,850 °F) provided by silicon carbide rods above the conveyor belt. A blower delivers air to selected locations along the belt to control the oxidation rate of the waste feed.

The ash material in the primary chamber is quenched with scrubber water effluent. The ash is then conveyed to an ash hopper, where it is removed to a holding area and analyzed for organic contaminants such as polychlorinated biphenyls (PCB).

Volatile gases from the primary chamber flow into the secondary chamber, which uses higher temperatures, greater residence time, turbulence, and supplemental energy (if required) to destroy these gases. Gases from the secondary chamber are ducted through the emissions control system. In the emissions control system, the particulates are removed in a venturi scrubber. Acid vapor is neutralized in a packed tower scrubber. An induced draft blower draws the cleaned gases from the scrubber into the free-standing exhaust stack. The scrubber liquid effluent flows into a clarifier, where scrubber sludge settles and is removed for disposal. The liquid then flows through an activated carbon filter for reuse or to a publicly owned treatment works for disposal.

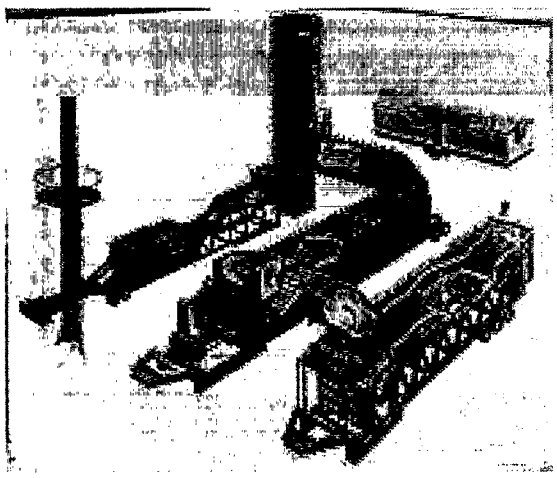

Mobile Thermal Processing System

WASTE APPLICABILITY:

This technology is suitable for soils or sediments with organic contaminants. Liquid organic wastes can be treated after mixing with sand or soil. Optimal waste characteristics are as follows:

- Particle size, 5 microns to 2 inches
- Moisture content, up to 50 percent by weight
- Density, 30 to 130 pounds per cubic foot
- Heating value, up to 10,000 British thermal units per pound
- Chlorine content, up to 5 percent by weight
- Sulfur content, up to 5 percent by weight
- Phosphorus, 0 to 300 parts per million (ppm)
- pH, 5 to 9
- Alkali metals, up to 1 percent by weight

STATUS:

EPA conducted two evaluations of the infrared thermal destruction technology. A full-scale unit was evaluated during August 1987 at the Peak Oil Superfund site in Brandon, Florida. The system treated nearly 7,000 cubic yards of waste oil sludge containing PCBs and lead. A pilot-scale demonstration took place at the Rose Township-Demode Road Superfund site in

The SITE Program assesses but does not approve or endorse technologies.

Michigan during November 1987. Organics, PCBs, and metals in soil were the target waste compounds. Two Applications Analysis Reports (EPA/540/A5-89/010 and EPA/540/A5-89/007) and two Technology Evaluation Reports (EPA/540/5-88/002a and EPA/540/5-89/007a) are available from EPA. In addition, the technology has been used to remediate PCB contamination at the Florida Steel Corporation and the LaSalle Electric Superfund sites.

This technology is no longer available through vendors in the United States. For further information about the technology, contact the EPA Project Manager.

DEMONSTRATION RESULTS:

The results from the two SITE demonstrations are summarized below.

- PCBs were reduced to less than 1 ppm in the ash, with a destruction removal efficiency (DRE) for air emissions greater than 99.99 percent (based on detection limits).
- In the pilot-scale demonstration, the Resource Conservation and Recovery Act standard for particulate emissions (0.08 gram per dry standard cubic foot) was achieved. In the full-scale demonstration, however, this standard was not met in all runs because of scrubber inefficiencies.
- Lead was not immobilized; however, it remained in the ash. Significant amounts were not transferred to the scrubber water or emitted to the atmosphere.
- The pilot-scale unit demonstrated satisfactory performance with high feed rate and reduced power consumption when fuel oil was added to the waste feed and the primary chamber temperature was reduced.
- Economic analysis suggests an overall waste remediation cost of less than $800 per ton.

FOR FURTHER INFORMATION:

EPA PROJECT MANAGER:
Laurel Staley
U.S. EPA
National Risk Management Research Laboratory
26 West Martin Luther King Drive
Cincinnati, OH 45268
513-569-7863
Fax: 513-569-7105

The SITE Program assesses but does not approve or endorse technologies.

HIGH VOLTAGE ENVIRONMENTAL APPLICATIONS, INC.
(formerly ELECTRON BEAM RESEARCH FACILITY, FLORIDA INTERNATIONAL UNIVERSITY, and UNIVERSITY OF MIAMI)
(High-Energy Electron Irradiation)

TECHNOLOGY DESCRIPTION:

High-voltage electron irradiation of water produces a large number of reactive chemical species, including the aqueous electron (e^-_{aq}), the hydrogen radical (H·), and the hydroxyl radical (OH·). These short-lived intermediates break down organic contaminants in aqueous wastes.

In the principal reaction, the aqueous electron transfers to halogen-containing compounds, breaking the halogen-carbon bond and liberating halogen anions such as chloride (Cl^-) or bromide (Br^-). The hydroxyl radical can undergo addition or hydrogen abstraction reactions, producing organic free radicals that decompose in the presence of other hydroxyl radicals and water. In most cases, organics are converted to carbon dioxide, water, and salts. Lower molecular weight aldehydes, haloacetic acids, and carboxylic acids form at low concentrations in some cases.

During the high-voltage electron irradiation process, electricity generates high energy electrons. The electrons are accelerated by the voltage to approximately 95 percent of the speed of light. They are then directed into a thin stream of water or sludge. All reactions are complete in less than 0.1 second. The electron beam and waste flow are adjusted to deliver the necessary dose of electrons. Although this is a form of ionizing radiation, there is no residual radioactivity.

High Voltage Environmental Applications, Inc. (High Voltage), has developed a mobile facility to demonstrate the treatment process (see photograph below).

WASTE APPLICABILITY:

This treatment process can effectively treat more than 100 common organic compounds. These compounds include the following:

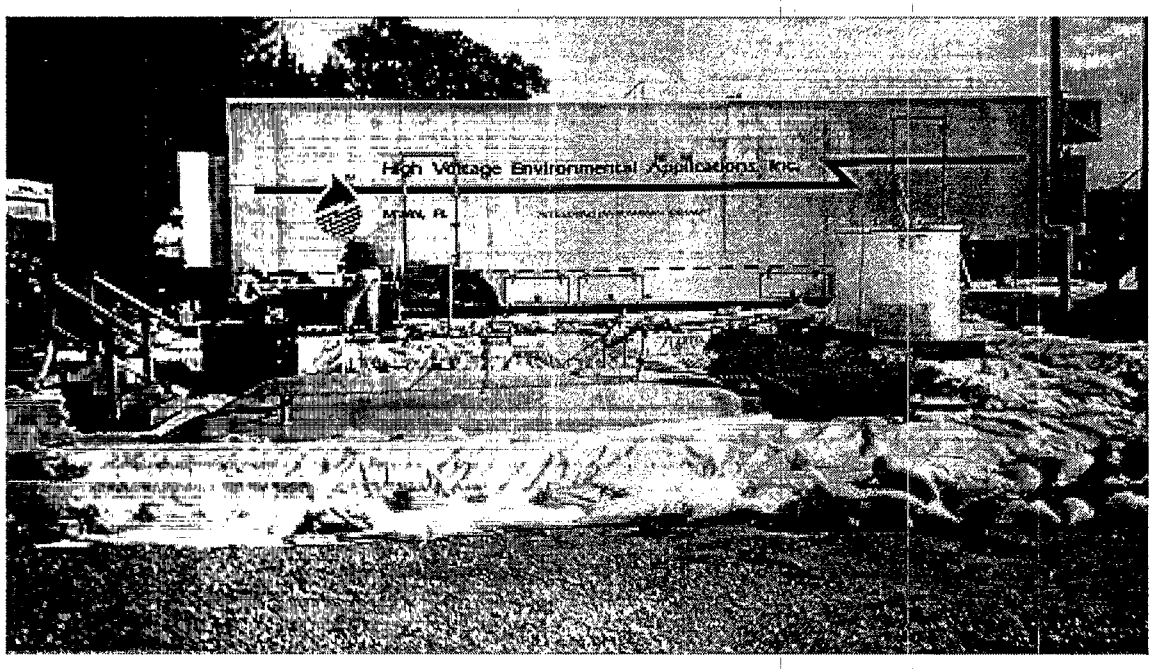

The Mobile Electron Beam Hazardous Waste Treatment System

The SITE Program assesses but does not approve or endorse technologies.

- Trihalomethanes (such as chloroform), which are found in chlorinated drinking water
- Chlorinated solvents, including carbon tetrachloride, trichloroethane, tetrachloroethene (PCE), trichloroethene (TCE), ethylene dibromide, dibromochloropropane, hexachlorobutadiene, and hexachloroethane
- Aromatics found in gasoline, including benzene, toluene, ethylbenzene, and xylene (BTEX)
- Chlorobenzene and dichlorobenzenes
- Phenol
- Dieldrin, a persistent pesticide
- Polychlorinated biphenyls
- A variety of other organic compounds

The treatment process is appropriate for removing various hazardous organic compounds from aqueous waste streams and sludges.

The high-energy electron irradiation process was accepted into the SITE Emerging Technology Program (ETP) in June 1990. For further information on the pilot-scale facility evaluated under the ETP, refer to the Emerging Technology Bulletins (EPA/540/F-93/502, EPA/540/F-92/009, and EPA/540/F-93/509), which are available from EPA. Based on results from ETP, the process was invited to participate in the Demonstration Program.

The ability of the technology to treat contaminated soils, sediments, or sludges is also being evaluated under the ETP. For further information on this evaluation, refer to the the High Voltage profile in the ETP section (ongoing projects).

The treatment process was demonstrated at the U.S. Department of Energy's Savannah River site in Aiken, South Carolina during two different periods totaling 3 weeks in September and November 1994. A trailer-mounted treatment system was demonstrated on a portion of the Savannah River site known as M-Area.

DEMONSTRATION RESULTS:

During the demonstration, the system treated about 70,000 gallons of M-Area groundwater contaminated with volatile organic compounds (VOC). The principal groundwater contaminants were TCE and PCE, which were present at concentrations of about 27,000 and 11,000 micrograms per liter (μg/L), respectively. The groundwater also contained low levels of cis-1,2-dichloroethene (40 μg/L). The following compounds were also spiked into the influent stream at approximately 500 μg/L: 1,2-dichloroethane, carbon tetrachloride, 1,1,1-trichloroethane, chloroform, and BTEX.

The highest VOC removal efficiencies were observed for TCE (99.5 percent), PCE (99.0 percent), and dichloroethene (greater than 99 percent). Removal efficiencies for chlorinated spiking compounds ranged from 68 to 98 percent, and removal efficiencies for BTEX ranged from 88 to 99.5 percent.

FOR FURTHER INFORMATION:

EPA PROJECT MANAGER:
Franklin Alvarez
U.S. EPA
National Risk Management Research Laboratory
26 West Martin Luther King Drive
Cincinnati, OH 45268
513-569-7631
Fax: 513-569-7571

TECHNOLOGY DEVELOPER CONTACT:
William Cooper
University of North Carolina at Wilmington
Department of Chemistry
601 South College Road
Wilmington, NC 28403-3297
910-962-3450
Fax: 910-962-3013

The SITE Program assesses but does not approve or endorse technologies.

HORSEHEAD RESOURCE DEVELOPMENT CO., INC.
(Flame Reactor)

TECHNOLOGY DESCRIPTION:

The Horsehead Resource Development Co., Inc. (HRD), flame reactor system is a patented, hydrocarbon-fueled, flash-smelting system that treats residues and wastes contaminated with metals (see figure below). The reactor processes wastes with hot (greater than 2,000 °C) reducing gases produced by combusting solid or gaseous hydrocarbon fuels in oxygen-enriched air.

In a compact, low-capital cost, water-cooled reactor, the feed materials react rapidly, allowing a high waste throughput. The end products are glass-like slag; a potentially recyclable, heavy metal-enriched oxide; and in some cases, a metal alloy. The glass-like slag is not toxicity characteristic leaching procedure (TCLP) leachable. The volatile metals are fumed and captured in a baghouse; nonvolatile metals partition to the slag or may be separated as a molten alloy. Organic compounds should be destroyed at the elevated temperature of the flame reactor technology. Volume reduction (of waste to slag plus oxide) depends on the chemical and physical properties of the waste.

In general, the system requires that wastes be dry enough (less than 5 percent total moisture) to be pneumatically fed and fine enough (less than 200 mesh) to react rapidly. HRD claims larger particles (up to 20 mesh) can be processed; however, the efficiency of metals recovery is decreased. The prototype system has a capacity of 1 to 3 tons per hour. According to HRD, individual units can be scaled to a capacity of 7 tons per hour.

WASTE APPLICABILITY:

The flame reactor system can be applied to granular solids, soil, flue dusts, slags, and sludges that contain heavy metals. HRD claims that the flame reactor technology has successfully treated the following wastes: (1) electric arc furnace dust, (2) lead blast furnace slag, (3) soil, (4) iron residues, (5) primary copper flue dust, (6) lead smelter nickel matte, (7) zinc plant leach

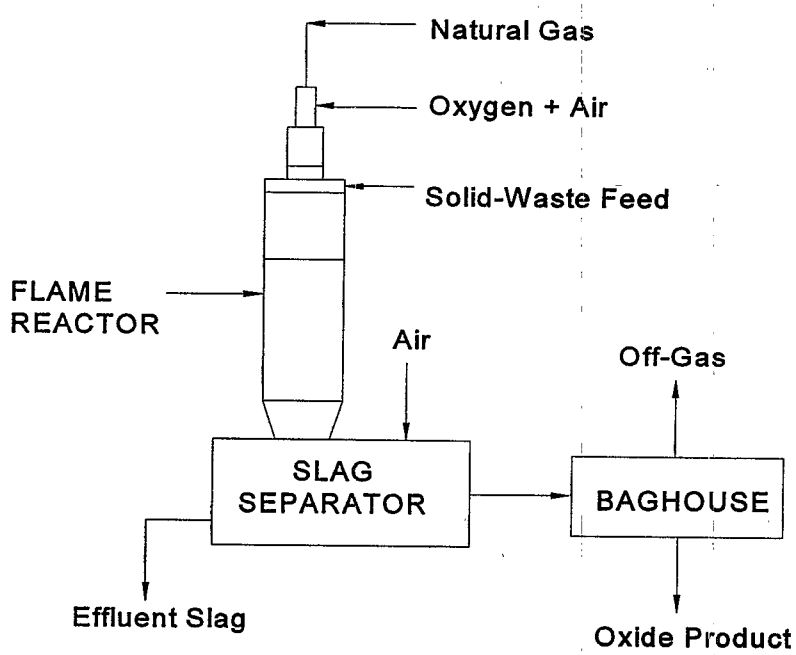

HRD Flame Reactor Process Flow

The SITE Program assesses but does not approve or endorse technologies.

residues and purification residues, (8) brass mill dusts and fumes, and (9) electroplating sludges.

The system has treated wastes with the following metal species and concentrations: zinc (up to 40 percent); lead (up to 10 percent); chromium (up to 4 percent); cadmium (up to 3 percent); arsenic (up to 1 percent); copper (up to 8 percent); cobalt; and nickel. According to HRD, the system can also treat soils that are contaminated with a variety of toxic organics.

STATUS:

This technology was accepted into the SITE Demonstration Program in 1990. Currently, the prototype flame reactor system operates as a stationary unit at HRD's facility in Monaca, Pennsylvania. EPA and HRD believe that a mobile system could be designed and constructed for on-site treatment of hazardous waste.

The SITE demonstration was conducted in March 1991 using secondary lead smelter soda slag from the National Smelting and Refining Company (NSR) Superfund site in Atlanta, Georgia. The demonstration was conducted at the Monaca, Pennsylvania facility under a Resource Conservation and Recovery Act research, development, and demonstration permit. This permit allows treatment of wastes containing high concentrations of metals, but only negligible concentrations of organics.

The major objectives of the SITE technology demonstration were to investigate the reuse potential of the recovered metal oxides, evaluate the levels of contaminants in the residual slag and their leaching potential, and determine the efficiency and economics of processing.

A 30,000-standard-tons-per-year commercial flame reactor system processes steel mill baghouse dust (K061) at the North Star Steel Mini Mill near Beaumont, Texas. The plant was activated June 1, 1993, and is reported to be performing as designed.

DEMONSTRATION RESULTS:

Approximately 72 tons of NSR waste material were processed during the demonstration. Partial test results are shown in the table below.

Metal Concentration Ranges in Influent and Effluent

	Waste Feed (mg/kg)*	Effluent Slag (mg/kg)	Oxide Product (mg/kg)
Arsenic	428-1,040	92.1-1,340	1,010-1,170
Cadmium	356-512	<2.3-13.5	1,080-1,380
Copper	1,460-2,590	2,730-3,890	1,380-1,780
Iron	95,600-130,000	167,000-228,000	29,100-35,600
Lead	48,200-61,700	1,560-11,400	159,000-184,000
Zinc	3,210-6,810	709-1,680	10,000-16,200

* milligrams per kilogram

All effluent slag passed toxicity characteristic leaching procedure criteria. The oxide was recycled to recover lead. The Technology Evaluation Report (EPA/540/5-91/005) and the Applications Analysis Report (EPA/540/A5-91/005) are available from EPA.

FOR FURTHER INFORMATION:

EPA PROJECT MANAGER:
Marta K. Richards
U.S. EPA
National Risk Management Research Laboratory
26 West Martin Luther King Drive
Cincinnati, OH 45268
513-569-7692
Fax: 513-569-7676

TECHNOLOGY DEVELOPER CONTACT:
Regis Zagrocki
Horsehead Resource Development Co., Inc.
Field Station - East Plant
Delaware Avenue
Palmerton, PA 18071
610-826-8818
Fax: 610-828-8872

The SITE Program assesses but does not approve or endorse technologies.

HRUBETZ ENVIRONMENTAL SERVICES, INC.
(HRUBOUT® Process)

TECHNOLOGY DESCRIPTION:

The HRUBOUT® process is a thermal, in situ and ex situ treatment process designed to remove volatile organic compounds (VOC) and semivolatile organic compounds (SVOC) from contaminated soils. The in situ process is shown in the figure below. Heated air is injected into the soil below the contamination zone, evaporating soil moisture and removing volatile and semivolatile hydrocarbons. As the water evaporates, soil porosity and permeability increase, further facilitating the air flow at higher temperatures. As the soil temperature increases, the less volatile constituents volatilize or are thermally oxidized.

Injection wells are drilled in a predetermined distribution pattern to depths below the contamination zone. The wells are equipped with steel casings, perforated at the bottom, and cemented into the hole above the perforations. Heated, compressed air is introduced at temperatures of up to 1,200 °F, and the pressure is slowly increased. As the air progresses upward through the soil, the moisture is evaporated, removing the VOCs and SVOCs. A surface collection system captures the exhaust gases under negative pressure. These gases are transferred to a thermal oxidizer, where the hydrocarbons are thermally destroyed in an incinerator at a temperature of 1,500 °F.

The air is heated in an adiabatic burner at 2.9 million British thermal units per hour (MMBtu/hr). The incinerator has a rating of 3.1 MMBtu/hr. The air blower can deliver up to 8,500 pounds per hour. The units employ a fully modulating fuel train that is fueled by natural gas or propane. All equipment is mounted on custom-designed mobile units and can operate 24 hours per day.

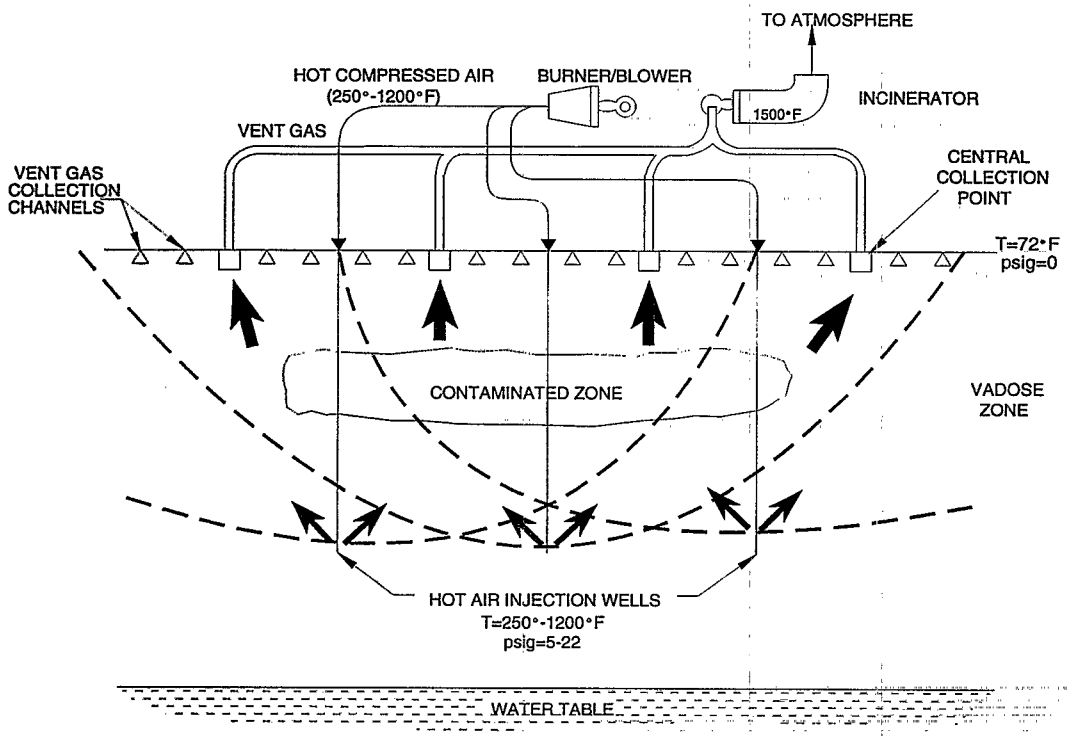

HRUBOUT® Process

The SITE Program assesses but does not approve or endorse technologies.

WASTE APPLICABILITY:

The HRUBOUT® process can remediate soils contaminated with halogenated or nonhalogenated organic volatiles and semivolatiles, such as gasoline, diesel oil, jet fuel, heating oil, chemical solvents, or other hydrocarbon compounds.

STATUS:

The HRUBOUT® process was accepted into the SITE Demonstration Program in July 1992. The technology was demonstrated at Kelly Air Force Base in San Antonio, Texas from January through February 1993. A 30-foot by 40-foot area of an 80,000-gallon JP-4 jet fuel spill site was chosen as the treatment area. Six heated air injection wells, spaced on a 3-by-2 grid 10 feet apart, were drilled to a depth of approximately 20 feet. The Demonstration Bulletin (EPA/540/MR-93/524) is available from EPA.

In September 1993, an in situ project was completed at the Canadian Forces military base in Ottawa, Ontario, Canada. Levels up to 1,900 parts per million (ppm) of total petroleum hydrocarbons (TPH) were encountered over a 17-foot by 17-foot area on the base. Five injection wells were drilled to a depth of 30 feet. After 12 days of treatment, borehole samples ranged from nondetect to 215 ppm TPH, meeting closure requirements of 450 ppm TPH.

The containerized version of the HRUBOUT® process was tested in July 1993 at a west Texas site contaminated with Varsol, or naphtha. The soil was excavated for treatment in Hrubetz's insulated container. Analysis of untreated soil revealed TPH at 1,550 ppm. Three loads were treated for about 60 to 65 hours each. Post-treatment samples ranged from nondetect to 7 ppm TPH, meeting the Texas Natural Resource Conservation Commission's background target level of 37 ppm. Large-scale mobile container units, holding up to 40 cubic yards and capable of ex situ treatment of a load in 8 hours, are under development.

The ex situ version of the technology was selected to remediate a site in Toronto, Ontario, Canada, which consisted of about 1,500 cubic yards (yd^3) of soil contaminated with gasoline and diesel. Soil contamination was measured at 200 ppm TPH. Following treatment, seven soil samples were collected. Two samples had detectable concentrations of TPH (25 and 37 ppm) and the remaining five samples had nondetectable levels of TPH, achieving the 100 ppm TPH cleanup goal.

About 100 yd^3 of toluene-contaminated soil was remediated in Orlando, Florida using the soil pile process with a smaller 5-ton unit. A composite analysis of the excavated soil found toluene at concentrations of up to 1,470 parts per billion; nondetect levels were required for closure. A composite soil sample collected after 96 hours of operation met the closure criteria.

Four patents have been granted, and additional patents are pending. The process was approved by the Texas Natural Resources Conservation Commission in 1991.

FOR FURTHER INFORMATION:

EPA PROJECT MANAGER:
Gordon Evans
U.S. EPA
National Risk Management Research Laboratory
26 West Martin Luther King Drive
Cincinnati, OH 45268
513-569-7684
Fax: 513-569-7787

TECHNOLOGY DEVELOPER CONTACTS:
Albert Hrubetz
Hrubetz Environmental Services, Inc.
5956 Sherry Lane, Suite 534
Dallas, TX 75225
214-363-7833
Fax: 214-691-8545
E-Mail: Hrubetz@prodigy.

The SITE Program assesses but does not approve or endorse technologies.

HUGHES ENVIRONMENTAL SYSTEMS, INC.
(Steam Enhanced Recovery Process)

TECHNOLOGY DESCRIPTION:

The Steam Enhanced Recovery Process (SERP) removes most volatile organic compounds (VOC) and semivolatile organic compounds (SVOC) from perched groundwater and contaminated soils both above and below the water table (see figure below). The technology is applicable to the in situ remediation of contaminated soils below ground surface and below or around permanent structures. The process accelerates contaminant removal rates and can be effective in all soil types.

Steam is forced through the soil by injection wells to thermally enhance the recovery of VOCs and SVOCs. Extraction wells are used for two purposes: to pump and treat groundwater, and to transport steam and vaporized contaminants to the surface. Recovered nonaqueous liquids are separated by gravity separation. Hydrocarbons are collected for recycling, and water is treated before being discharged to a storm drain or sewer. Vapors can be condensed and treated by any of several vapor treatment techniques (for example, thermal oxidation and catalytic oxidation). The technology uses readily available components such as extraction and monitoring wells, manifold piping, vapor and liquid separators, vacuum pumps, and gas emission control equipment.

WASTE APPLICABILITY:

The SERP can extract VOCs and SVOCs from contaminated soils and perched groundwater. Compounds suitable for treatment are petroleum hydrocarbons such as gasoline and diesel and jet fuel; solvents such as trichloroethene, trichloroethane, and dichlorobenzene; or a mixture of these compounds. After application of the process, subsurface conditions are excellent for biodegradation of residual contaminants. The process cannot be applied to contaminated soil very near the ground surface unless a cap exists.

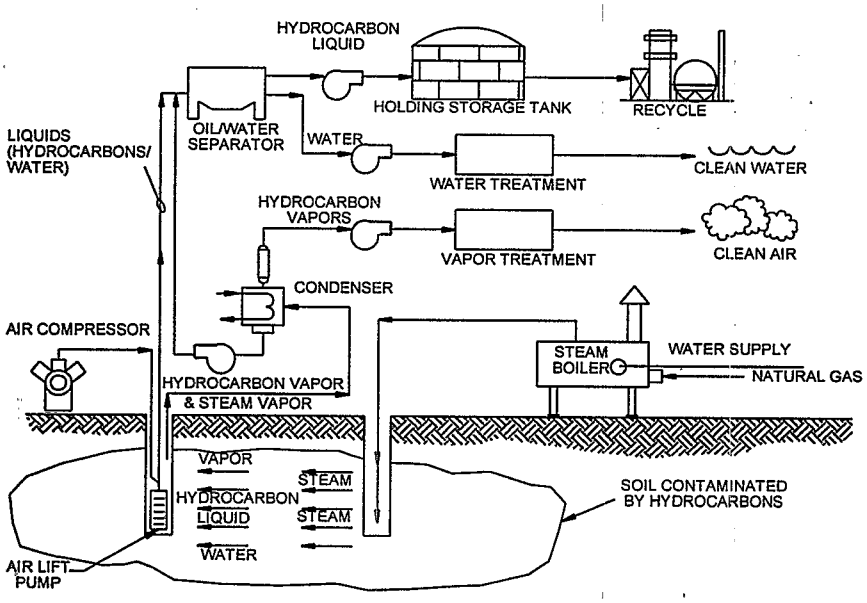

Steam Enhanced Recovery Process

The SITE Program assesses but does not approve or endorse technologies.

STATUS:

This technology was accepted into the SITE Demonstration Program in 1991. The demonstration of the technology began in August 1991 and was completed in September 1993. The demonstration took place in Huntington Beach, California, at a site contaminated by a large diesel fuel spill. The Demonstration Bulletin (EPA/540/MR-94/510), Technology Capsule (EPA/540/R-94/510a), and Innovative Technology Evaluation Report (EPA/540/R-94/510) are available from EPA.

For more information regarding this technology, see the profiles for Berkeley Environmental Restoration Center (completed projects) or Praxis Environmental Technologies, Inc., in the Demonstration Program section (ongoing profiles).

This technology is no longer available through a vendor. For further information on the technology, contact the EPA Project Manager.

DEMONSTRATION RESULTS:

Evaluation of the posttreatment data suggests the following conclusions:

- The geostatistical weighted average for total petroleum hydrocarbon (TPH) concentrations in the treated soils was 2,290 milligrams per kilogram (mg/kg). The 90 percent confidence interval for this average concentration is 996 mg/kg to 3,570 mg/kg, indicating a high probability that the technology did not meet the cleanup criterion. Seven percent of soil samples had TPH concentrations in excess of 10,000 mg/kg.
- The geostatistical weighted average for total recoverable petroleum hydrocarbon (TRPH) concentrations was 1,680 mg/kg, with a 90 percent confidence interval of 676 mg/kg to 2,680 mg/kg. Levels of benzene, toluene, ethylbenzene, and xylenes (BTEX) were below the detection limit (6 micrograms per kilogram) in treated soil samples; BTEX was detected at low mg/kg levels in a few pretreatment soil samples.
- Analysis of triplicate treated soil samples showed marked variability in soil contaminant concentrations over short distances. Analogous results for TPH and TRPH triplicate samples suggest that the contaminant concentration variability exists within the site soil matrix and is not the result of analytical techniques. This variability is the reason that confidence intervals for the average concentrations are so large.
- The data suggest that lateral or downward migration of contaminants did not occur during treatment.

FOR FURTHER INFORMATION:

EPA PROJECT MANAGER:
Paul dePercin
U.S. EPA
National Risk Management Research Laboratory
26 West Martin Luther King Drive
Cincinnati, OH 45268
513-569-7797
Fax: 513-569-7105
E-Mail: dePercin.Paul@epamail.epa.gov

The SITE Program assesses but does not approve or endorse technologies.

IIT RESEARCH INSTITUTE/ BROWN AND ROOT ENVIRONMENTAL
(Radio Frequency Heating)

TECHNOLOGY DESCRIPTION:

Radio frequency heating (RFH) is an in situ process that uses electromagnetic energy to heat soil and enhance soil vapor extraction (SVE). Developed by IIT Research Institute, the patented RFH technique heats a discrete volume of soil using rows of vertical electrodes embedded in soil (or other media). Heated soil volumes are bounded by two rows of ground electrodes with energy applied to a third row midway between the ground rows. The three rows act as a buried triplate capacitor. When energy is applied to the electrode array, heating begins at the top center and proceeds vertically downward and laterally outward through the soil volume. The technique can heat soils to over 300 °C.

RFH enhances SVE in two ways: (1) contaminant vapor pressures are increased by heating, and (2) the soil permeability is increased by drying. Extracted vapor can then be treated by a variety of existing technologies, such as granular activated carbon or incineration.

WASTE APPLICABILITY:

RFH can treat petroleum hydrocarbons, volatile organic compounds, semivolatile organic compounds, and pesticides in soils. The technology is most efficient in subsurface areas with low groundwater recharge. In theory, the technology should be applicable to any polar compound in any nonmetallic media.

STATUS:

The RFH technique was accepted into the SITE Demonstration Program in summer 1992. The technique was demonstrated in August 1993 at Kelly Air Force Base (AFB), Texas, as part of a joint project with the U.S. Air Force. Brown

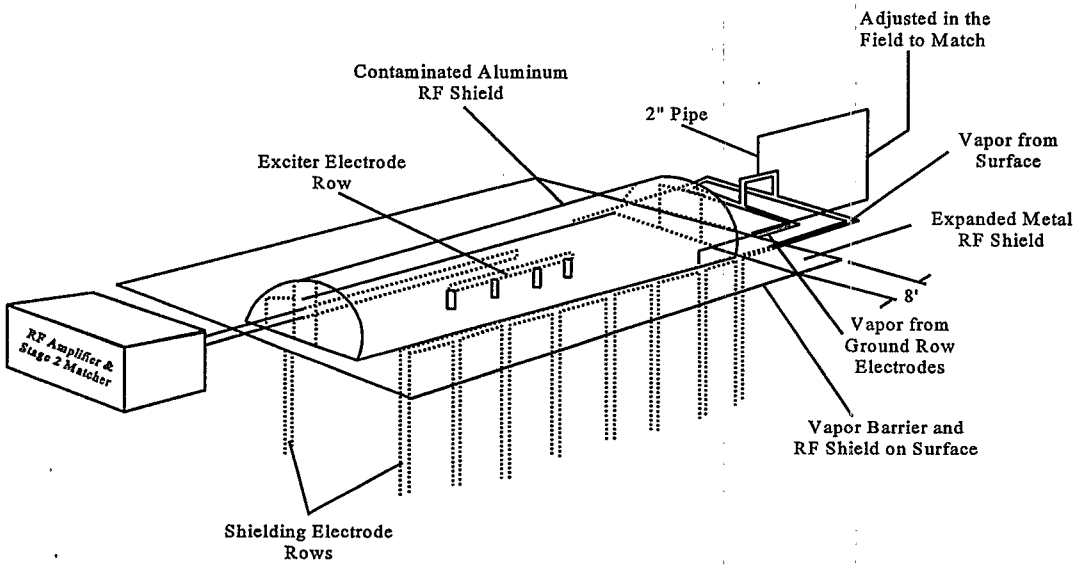

In Situ Radio Frequency Heating System

The SITE Program assesses but does not approve or endorse technologies.

and Root Environmental was the prime contractor evaluating and implementing RFH forthe U.S. Air Force. A field demonstration of the KAI Technologies, Inc. (KAI), RFH technology was completed in June 1994 at the same site for comparison. The Demonstration Bulletin (EPA/540/MR-94/527), Technology Capsule (EPA/540/R-94/527a), and the Innovative Technology Evaluation Report (EPA/540/R-94-527) are available from EPA. For further information on the KAI technology, see the profile in the Demonstration Program section (completed projects).

In 1995, the RFH technique was tested at the former chemical waste landfill at Sandia National Laboratories in Albuquerque, New Mexico. Approximately 800 cubic yards of silty soil was heated. Preliminary results indicate that the contaminant concentration in the extracted vapors increased by a factor of 10 compared to in situ venting.

Two previous field tests were completed using in situ RFH. The first test was completed at a fire training pit, located at the Volk Air National Guard Base in Camp Douglas, Wisconsin. The sandy soil in the pit was contaminated with jet fuel. The second test was completed at Rocky Mountain Arsenal in Colorado, where clayey soil was contaminated by organochlorine pesticides.

DEMONSTRATION RESULTS:

Under the SITE demonstration, statistical analyses for the design treatment zone indicate that total recoverable petroleum hydrocarbons, pyrene, and bis(2-ethylhexyl)phthalate exhibited statistically significant decreases (at the 95 and 97.5 percent confidence levels). Chlorobenzene concentrations appeared to increase during treatment, possibly due to volatilization of chlorobenzene present in the groundwater.

Significant concentrations of 2-hexanone, 4-methyl-2-pentanone, acetone, and methyl ethyl ketone were found in the treated soils, although virtually no ketones were found before treatment. Soil temperatures as high as 1,000 °C during the demonstration may have caused partial oxidation of petroleum hydrocarbons. Alternatively, the ketones may have been volatilized from groundwater. At this time, insufficient data are available to determine the source of ketones found in treated soils.

FOR FURTHER INFORMATION:

EPA PROJECT MANAGER:
Laurel Staley
U.S. EPA
National Risk Management Research Laboratory
26 West Martin Luther King Drive
Cincinnati, OH 45268
513-569-7863
Fax: 513-569-7105

TECHNOLOGY DEVELOPER CONTACTS:
Harsh Dev
IIT Research Institute
10 West 35th Street
Chicago, IL 60616-3799
312-567-4257
Fax: 312-567-4286

Captain Jeff Stinson
U.S. Air Force Armstrong Laboratory
Environmental Risk Management, AL/EQW-OL
139 Barnes Drive, Suite 2
Tyndall AFB, FL 32403-5323
904-283-6254
Fax: 904-283-6064

Clifton Blanchard
Brown and Root Environmental
800 Oak Ridge Turnpike
Jackson Plaza, A-600
Oak Ridge, TN 37830
423-483-9900
Fax: 423-483-2014

The SITE Program assesses but does not approve or endorse technologies.

IONICS RCC
(B.E.S.T. Solvent Extraction Technology)

TECHNOLOGY DESCRIPTION:

Solvent extraction treats sludges, sediments, and soils contaminated with a wide range of hazardous contaminants including polychlorinated biphenyls (PCB), polynuclear aromatic hydrocarbons (PAH), pesticides, and herbicides. The waste matrix is separated into three fractions: oil, water, and solids. Organic contaminants, such as PCBs, are concentrated in the oil fraction, while metals are separated into the solids fraction. The volume and toxicity of the original waste is thereby reduced, and the concentrated waste streams can be efficiently treated for disposal.

The B.E.S.T. technology is a mobile solvent extraction system that uses secondary or tertiary amine solvents to separate organics from soils, sediments, and sludges. The B.E.S.T. solvents are hydrophobic above 20 °C and hydrophilic below 20 °C. This property allows the process to extract both aqueous and nonaqueous compounds by changing the solvent temperature.

Pretreatment includes screening the waste to remove particles larger than 1 inch in diameter, which are treated separately.

The B.E.S.T. process begins by mixing and agitating the solvent and waste in a mixer/settler. Solids from the mixer/settler are then transferred to the extractor/dryer vessel. (In most cases, waste materials may be added directly to the extractor/dryer and the mixer/settler is not required.) Hydrocarbons and water in the waste simultaneously solubilize with the solvent, creating a homogeneous mixture. As the solvent breaks the oil-water-solid emulsions in the waste, the solids are released and settle by gravity. The solvent mixture is decanted from the solids and centrifuged to remove fine particles.

The solvent-oil-water mixture is then heated. As the mixture's temperature increases, the water separates from the organics and solvent. The organics-solvent fraction is decanted and sent to a solvent evaporator, where the solvent is recycled. The organics are discharged for

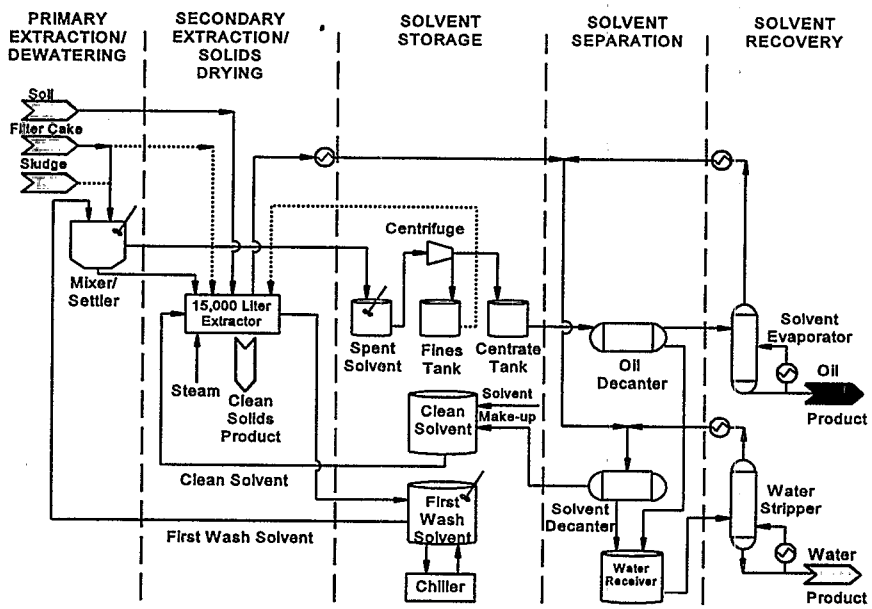

B.E.S.T. Solvent Extraction Technology

The SITE Program assesses but does not approve or endorse technologies.

recycling, disposal, or treatment. The water passes to a steam stripping column where residual solvent is recovered for recycling. The water is typically discharged to a local wastewater treatment plant.

The B.E.S.T. technology is modular, allowing for on-site treatment. The process significantly reduces the organic contamination concentration in the solids. B.E.S.T. also concentrates the contaminants into a smaller volume, allowing for efficient final treatment and disposal.

WASTE APPLICABILITY:

The B.E.S.T. technology can remove hydrocarbon contaminants such as PCBs, PAHs, pesticides, and herbicides from sediments, sludges, or soils. System performance can be influenced by the presence of detergents and emulsifiers.

STATUS:

The B.E.S.T. technology was accepted into the SITE Demonstration Program in 1987. The SITE demonstration was completed in July 1992 at the Grand Calumet River site in Gary, Indiana. The following reports are available from EPA:

- Applications Analysis Report (EPA/540/AR-92/079)
- Technology Evaluation Report - Volume I (EPA/540/R-92/079a)
- Technology Evaluation Report - Volume II, Part 1 (EPA/540/R-92/079b)
- Technology Evaluation Report - Volume II, Part 2 (EPA/540/R-92/079c)
- Technology Evaluation Report - Volume II, Part 3 (EPA/540/R-92/079d)
- Technology Demonstration Summary (EPA/540/SR-92/079)

The first full-scale B.E.S.T. unit was used at the General Refining Superfund site in Garden City, Georgia. A 75-ton-per-day B.E.S.T. unit is being installed at Idaho National Engineering Laboratory to extract organic contaminants from mixed wastes.

DEMONSTRATION RESULTS:

The SITE demonstration showed that the B.E.S.T. process removed greater than 99 percent of the PCBs found in river sediments without using mechanical dewatering equipment. Treated solids contained less than 2 milligrams per kilogram PCBs. Comparable removal efficiencies were noted for PAHs.

FOR FURTHER INFORMATION:

EPA PROJECT MANAGER:
Mark Meckes
U.S. EPA
National Risk Management Research Laboratory
26 West Martin Luther King Drive
Cincinnati, OH 45268
513-569-7348
Fax: 513-569-7328

TECHNOLOGY DEVELOPER CONTACT:
William Heins
Ionics RCC
3006 Northup Way, Suite 200
Bellevue, WA 98004
425-828-2400
Fax: 425-828-0526

The SITE Program assesses but does not approve or endorse technologies.

KAI TECHNOLOGIES, INC./ BROWN AND ROOT ENVIRONMENTAL
(Radio Frequency Heating)

TECHNOLOGY DESCRIPTION:

Radio frequency heating (RFH) is an in situ process that uses electromagnetic energy to heat soil and enhance bioventing and soil vapor extraction (SVE). The patented RFH technique, developed by KAI Technologies, Inc. (KAI), uses an antenna-like applicator inserted in a single borehole to heat a volume of soil. Large volumes of soil can be treated by RFH employing a control system and an array of applicators. When energy is applied by the applicator to the soil, heating begins near the borehole and proceeds radially outward. This technique can achieve soil temperatures from just above ambient to over 250 °C.

RFH enhances SVE in two ways: (1) contaminant vapor pressures are increased by heating, and (2) soil permeability is increased by drying. Extracted vapor can then be treated by a variety of existing technologies.

WASTE APPLICABILITY:

The RFH technique has been tested using pilot-scale vertical and horizontal antenna orientations to remove petroleum hydrocarbons and volatile and semivolatile organics from soils. The technology is most efficient in subsurface areas with low groundwater recharge. In theory, the technology should be applicable to any polar compound in any nonmetallic medium. The flexible design permits easy access for in situ treatment of organics and pesticides under buildings or fuel storage tanks.

STATUS:

The KAI RFH technique was accepted into the SITE Demonstration Program in summer 1992. The technique was demonstrated between January and July 1994 at Kelly Air Force Base, Texas as part of a joint project with the U.S. Air Force Armstrong Laboratory. Brown and Root Environmental was the prime contractor evaluating and implementing RFH for the U.S. Air Force. A field demonstration of the IIT Research Institute RFH technology was completed in summer 1993 at the same site for comparison. The Demonstration Bulletin (EPA/540/MR-94/528), Technology Capsule (EPA/540/R-94/528a), and Innovative Technology Evaluation Report (EPA/540/R-94/528) are available from EPA. For further information on the IIT Research Institute technology, see the profile in the Demonstration Program section

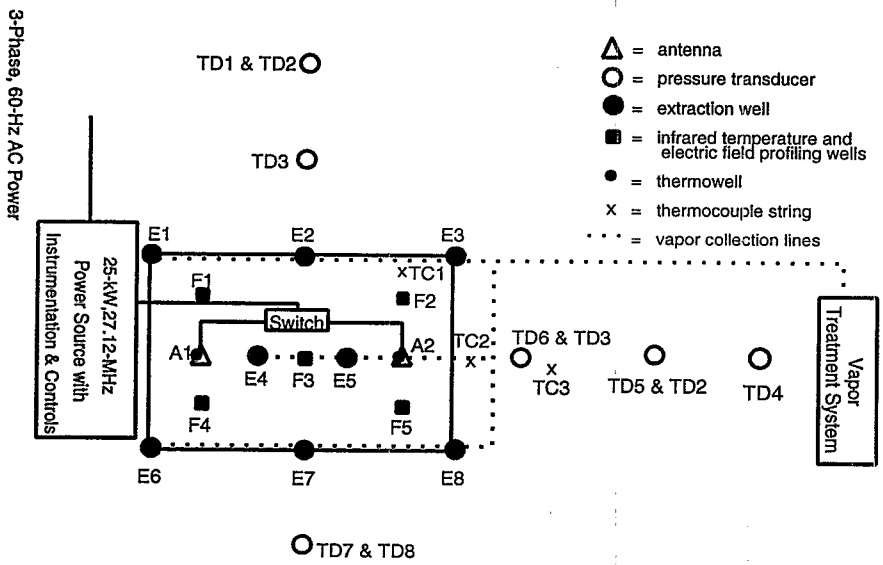

KAI Antenna System

The SITE Program assesses but does not approve or endorse technologies.

(completed projects). KAI is now leasing commercial units to engineering companies throughout the U.S.

DEMONSTRATION RESULTS:

For this demonstration, the original treatment zone was 10 feet wide, 15 feet long, and 20 feet deep. This treatment zone was based on RFH operation at 13.56 megahertz (MHz); however, RFH was applied at 27.12 MHz to the top 10 feet of the original treatment zone to reduce the time on site by half. Demonstration results were as follows:

- Uniform heating within the revised heating zone: significant regions had soil temperatures in excess of 100 °C with soil temperatures within a 3-foot radius of the antenna exceeding 120 °C.
- Significant amounts of liquid were heated to around 240 °C as strongly suggested by a measurement of 233.9 °C on the outside wall of the heating well liner.
- Soil permeability increased by a factor of 20 within the revised treatment zone.
- In the original treatment zone, the mean removal for total recoverable petroleum hydrocarbons (TRPH) was 30 percent at the 90 percent confidence level. Concentrations in the pretreatment samples varied from less than 169 to 105,000 parts per million (ppm); posttreatment concentrations varied from less than 33 to 69,200 ppm.
- In the revised treatment zone, the mean removal for TRPH was 49 percent at the 95 percent confidence level. Concentrations in the pretreatment samples varied from less than 169 ppm to 6,910 ppm; posttreatment concentrations varied from less than 33 ppm to 4,510 ppm.
- Benzo(o)fluoranthene, benzo(a)pyrene, and bis(2-ethylhexyl)phthalate exhibited statistically significant removals within the original treatment zone. Benzo(o)-fluoranthene, benzo(a)pyrene, chrysene, pyrene, and fluoranthene exhibited statistically significant removals within the revised treatment zone.
- Contaminants may have migrated into and out of the revised treatment zone due to the design and operation of the SVE system. The design of the heated vapor recovery system is an essential component of the efficiency of the overall system.
- Cleanup costs are estimated to range from less than $80 per ton for large scale treatments to between $100 to $250 per ton for small-scale (hot spot) treatments.

FOR FURTHER INFORMATION:

EPA PROJECT MANAGER:
Laurel Staley, U.S. EPA
National Risk Management Research Laboratory
26 West Martin Luther King Drive
Cincinnati, OH 45268
513-569-7863
Fax: 513-569-7105

TECHNOLOGY DEVELOPER CONTACTS:
Raymond Kasevich or Michael Marley
KAI Technologies, Inc.
170 West Road, Suite 4
Portsmouth, NH 03801
603-431-2266 or 413-528-4651
Fax: 603-431-4920

Captain Jeff Stinson
U.S. Air Force Armstrong Laboratory
Environmental Risk Management, AL/EQW-OL
139 Barnes Drive, Suite 2
Tyndall AFB, FL 32403-5323
904-283-6254
Fax: 904-283-6286

Clifton Blanchard
Brown and Root Environmental
800 Oak Ridge Turnpike
Jackson Plaza, A-600
Oak Ridge, TN 37830
423-483-9900
Fax: 423-483-2014

The SITE Program assesses but does not approve or endorse technologies.

MAGNUM WATER TECHNOLOGY
(CAV-OX® Process)

TECHNOLOGY DESCRIPTION:

The CAV-OX® process uses a combination of hydrodynamic cavitation and ultraviolet (UV) radiation to oxidize contaminants in water. The process (see figure below) is designed to remove organic contaminants from wastewater and groundwater without releasing volatile organic compounds into the atmosphere.

The process generates free radicals to degrade organic contaminants. The cavitation process alone has been demonstrated to achieve trichloroethene (TCE) reductions of up to 65 percent. UV excitation and, where necessary, addition of hydrogen peroxide and metal catalysts, provide synergism to achieve overall reductions of over 99 percent. Neither the cavitation chamber nor the UV lamp or hydrogen peroxide reaction generates toxic by-products or air emissions.

Magnum Water Technology (Magnum) estimates the cost of using the CAV-OX® process to be about half the cost of other advanced UV oxidation systems and substantially less than carbon adsorption. Because the process equipment has one moving part, maintenance costs are minimal. According to Magnum, the CAV-OX® process does not exhibit the quartz tube scaling common with other UV equipment.

WASTE APPLICABILITY:

The process is designed to treat groundwater or wastewater contaminated with organiccompounds. Contaminants such as halogenated solvents; phenol; pentachlorophenol (PCP); pesticides; polychlorinated biphenyls; explosives; benzene, toluene, ethylbenzene, and xylenes; methyl tertiary butyl ether; other organic compounds; and cyanide are suitable for this treatment process. Bacteria and virus strains are also eliminated.

STATUS:

This technology was accepted into the SITE Demonstration Program in summer 1992 and was demonstrated for 4 weeks in March 1993 at Edwards Air Force Base (AFB) Site 16 in California. The Applications Analysis Report (EPA/540/AR-93/520), Technology Evaluation Report (EPA/540/R-93/520), and a videotape are available from EPA.

Magnum reports that improvements in UV lamp and reactor technologies have improved the efficiency of the CAV-OX® process three- to five-fold, compared with the pilot-scale unit tested at Edwards AFB under the SITE Program. CAV-OX® recently (1996) has proven very effective in potentiating ozone concentrations in

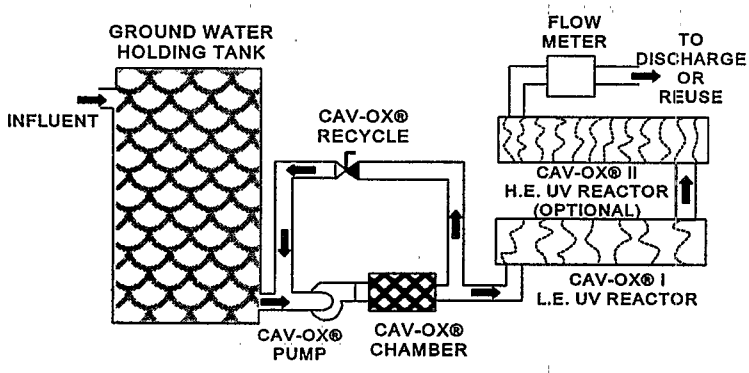

The CAV-OX® Process

The SITE Program assesses but does not approve or endorse technologies.

water reclamation applications. Ozone gas (O_3) is relatively insoluble in water. However, hydrodynamic cavitation used in the CAV-OX® process continuously develops micro bubbles which enhances the dispersion of ozone in water. Three O_3 techniques are available to Magnum: corona discharge with air feed, electrochemical 'water splitting' method, and electrochemical anodic oxidation.

The CAV-OX® process has been tested at several public and private sites, including the San Bernadino and Orange County Water Department in California. At a Superfund site, the process treated leachate containing 15 different contaminants. PCP, one of the major contaminants, was reduced by 96 percent in one test series. The process has also been used to remediate former gasoline station sites and successfully reduced contaminants in process streams at chemical and pharmaceutical plants.

The CAV-OX® unit was part of an ongoing evaluation at the U.S. Army Aberdeen Proving Ground (Aberdeen). Special features of the unit tested include remote monitoring and control systems for pH, flow rates, H_2O_2 flow rate, storage level and pump rate, UV lamp, main power, pump function, and remote system shutdown control. The 15-gallon-per-minute CAV-OX®I Low Energy unit was operated by Army contractors for 9 months. Upon completion of testing at Aberdeen, further CAV-OX® II High Energy Tests were conducted at El Segundo. The CAV-OX® process achieved contaminant concentrations of greater than 95 percent. During 1997 tests of CAV-OX® equipment and/or Pilot Tests were made in Taiwan, Thailand, and Australia. Also, a continuing series of tests for major U.S. corporations are on-going. The CAV-OX® process achieved removal efficiencies of greater than 99.9 percent for TCE, benzene, toluene, ethylbenzene, and xylenes. SITE demonstration results for the CAV-OX® process are shown in the table below. Results are presented for both the CAV-OX® I (cavitation chamber by itself) and CAV-OX® II (cavitation chamber combined with UV) demonstrations.

FOR FURTHER INFORMATION:

EPA PROJECT MANAGER:
Richard Eilers
U.S. EPA
National Risk Management Research Laboratory
26 West Martin Luther King Drive
Cincinnati, OH 45268
513-569-7809
Fax: 513-569-7111

TECHNOLOGY DEVELOPER CONTACTS:
Dale Cox or Jack Simser
Magnum Water Technology
600 Lairport Street
El Segundo, CA 90245
310-322-4143 or 310-640-7000
Fax: 310-640-7005

H_2O_2[1] Concentrations (mg/L)[2]	Flow (gpm)[3]	CAV-OX® I Removal Efficiencies (%) TCE	Benzene	Toluene	Xylene	Flow (gpm)	CAV-OX® II Removal Efficiencies (%) TCE 5-kW[4]	TCE 10-kW	Benzene 5-kW	Benzene 10-kW	Toluene 5-kW	Toluene 10-kW	Xylene 5-kW	Xylene 10-kW
33.1	0.5	99.9	>99.9	99.4	92.9	1.5	99.6	99.2	99.4	98.8	>99.9	98.6	>99.9	>99.9
23.4	0.6	99.9	>99.9	>99.9	>99.9	2.0	99.7	99.7	99.5	99.6	>99.9	>99.9	>99.9	>99.9
4.9	1.5	71.4	88.6	87.4	65.6	4.0	87.7	98.1	89.7	98.7	88.8	97.1	78.7	87.2
48.3	0.6	99.7	>99.9	>99.9	>99.9	1.4	99.8	99.7	99.8	99.8	>99.9	>99.9	98.7	>99.9
6.0	0.7	87.8	96.9	94.5	92.1	1.9	98.4	99.3	98.8	99.3	96.9	98.6	93.6	97.0
4.9	1.5	61.7	81.6	83.8	80.2	3.9	85.1	97.1	89.5	97.8	91.8	97.9	90.4	96.0
5.9	0.5	96.4	99.4	99.8	98.9	1.4	99.6	99.4	99.6	99.6	99.8	99.8	99.5	99.5
5.9	0.7	87.1	96.5	97.6	98.1	1.9	97.8	99.2	99.4	99.5	99.5	99.7	99.2	99.7
6.1	1.5	60.6	86.1	87.3	>99.9	4.0	86.3	98.9	93.5	99.5	94.5	99.6	95.4	>99.9
0	-	-	-	-	-	1.6	94.1	99.2	49.1	68.1	20.7	54.7	43.3	46.7
0	-	-	-	-	-	1.8	80.6	97.6	38.5	60.5	48.6	75.2	56.9	83.8

[1] hydrogen peroxide [2] milligrams per liter [3] gallons per minute [4] kilowatts

CAV-OX® Process Demonstration Results

The SITE Program assesses but does not approve or endorse technologies.

MATRIX PHOTOCATALYTIC INC.
(Photocatalytic Water Treatment)

TECHNOLOGY DESCRIPTION:

The Matrix Photocatalytic Inc. (Matrix) photocatalytic oxidation system, shown in the photograph below, removes dissolved organic contaminants from water and destroys them in a continuous flow process at ambient temperatures. When excited by light, the titanium dioxide (TiO_2) semiconductor catalyst generates hydroxyl radicals that oxidatively break the carbon bonds of hazardous organic compounds.

The Matrix system converts organics such as polychlorinated biphenyls (PCB); phenols; benzene, toluene, ethylbenzene, and xylene (BTEX); and others to carbon dioxide, halides, and water. Efficient destruction typically occurs between 30 seconds and 2 minutes actual exposure time. Total organic carbon removal takes longer, depending on the other organic molecules and their molecular weights.

The Matrix system was initially designed to destroy organic pollutants or to remove total organic carbon from drinking water, groundwater, and plant process water. The Matrix system also destroys organic pollutants such as PCBs, polychlorinated dibenzodioxins, polychlorinated dibenzofurans, chlorinated alkenes, chlorinated phenols, chlorinated benzenes, alcohols, ketones, aldehydes, and amines. Inorganic pollutants such as cyanide, sulphite, and nitrite ions can be oxidized to cyanate ion, sulphate ion, and nitrate ion, respectively.

WASTE APPLICABILITY:

The Matrix system can treat a wide range of concentrations of organic pollutants in industrial wastewater and can be applied to the ultrapure water industry and the drinking water industry. The Matrix system can also remediate groundwater.

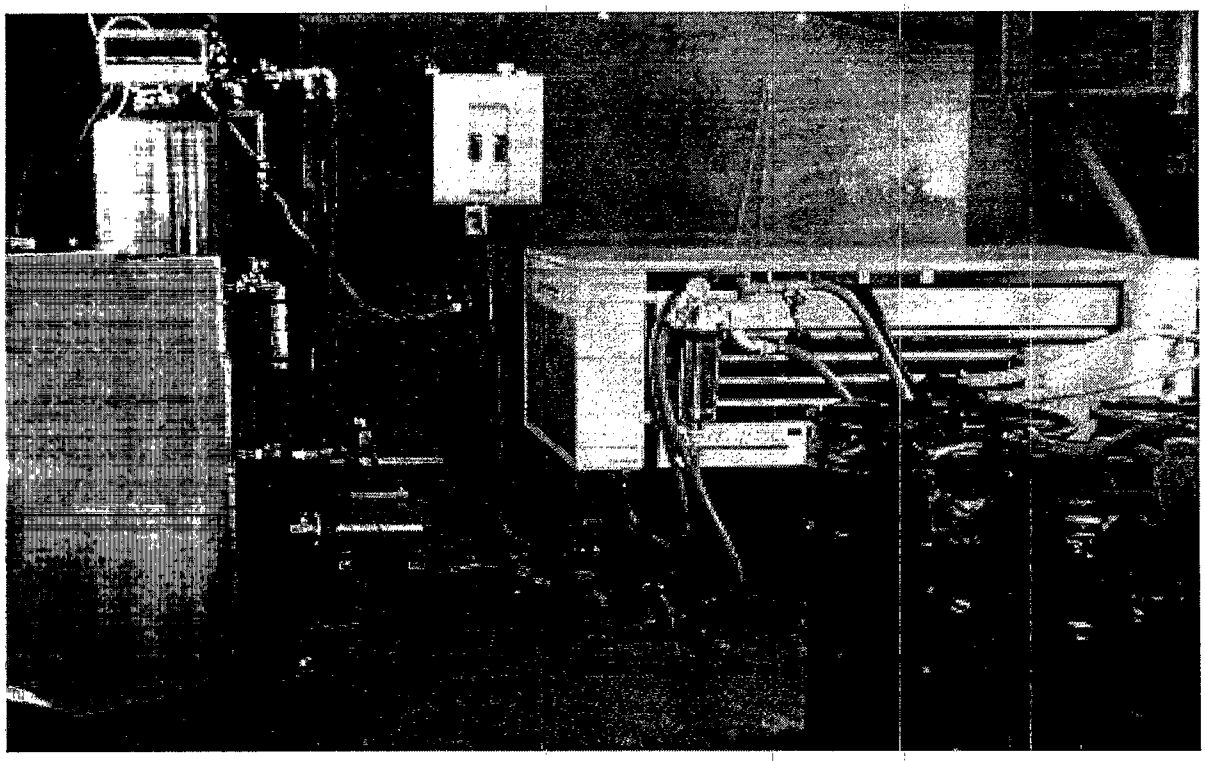

10-Gallon-Per-Minute TiO_2 Photocatalytic System Treating BTEX in Water

The SITE Program assesses but does not approve or endorse technologies.

STATUS:

The system was accepted into the SITE Emerging Technology Program (ETP) in May 1991. Results from the ETP evaluation were published in a journal article (EPA/540/F-94/503) available from EPA. Based on results from the ETP, Matrix was invited to participate in the Demonstration Program.

During August and September 1995, the Matrix system was demonstrated at the K-25 site at the Department of Energy's Oak Ridge Reservation in Oak Ridge, Tennessee. Reports detailing the results from the demonstration are available from EPA.

DEMONSTRATION RESULTS:

Results from the demonstration are detailed below:

- In general, high percent removals (up to 99.9 percent) were observed for both aromatic volatile organic compounds (VOCs) and unsaturated VOCs. However, the percent removals for saturated VOCs were low (between 21 and 40 percent).
- The percent removals for all VOCs increased with increasing number of path lengths and oxidant doses. At equivalent contact times, changing the flow rate did not appear to impact the treatment system performance for all aromatic VOCs and most unsaturated VOCs (except 1,1-dichloroethene [DCE]). Changing the flow rate appeared to impact the system performance for saturated VOCs.
- The effluent met the Safe Drinking Water Act maximum contaminant levels (MCL) for benzene; cis-1,2-DCE; and 1,1-DCE at a significant level of 0.05. However, the effluent did not meet the MCLs for tetrachloroethene (PCE); trichloroethene (TCE); 1,1-dichloroethane (DCA); and 1,1,1-trichloroethane (TCA) at a significant level of 0.05. The influent concentrations for toluene and total xylenes were below the MCLs.
- In tests performed to evaluate the effluent's acute toxicity to water fleas and fathead minnows, more than 50 percent of the organisms died. Treatment by the Matrix system did not reduce the groundwater toxicity for the test organisms at a significant level of 0.05.
- In general, the percent removals were reproducible for aromatic and unsaturated VOCs when the Matrix system was operated under identical conditions. However, the percent removals were not reproducible for saturated VOCs. The Matrix system's performance was generally reproducible in (1) meeting the target effluent levels for benzene; cis-1,2-DCE; and 1,1-DCE; and (2) not meeting the target effluent levels for PCE; TCE; 1,1-DCA; and 1,1,1-TCA.
- Purgable organic compounds and total organic halides results indicated that some VOCs were mineralized in the Matrix system. However, formulation of aldehydes, haloacetic acids, and several tentatively identified compounds indicated that not all VOCs were completely mineralized.

FOR FURTHER INFORMATION:

EPA PROJECT MANAGER:
Richard Eilers
U.S. EPA
National Risk Management Research Laboratory
26 West Martin Luther King Drive
Cincinnati, OH 45268
513-569-7809 Fax: 513-569-7111

TECHNOLOGY DEVELOPER CONTACT:
Bob Henderson
Matrix Photocatalytic Inc.
22 Pegler Street
London, Ontario, Canada
N5Z 2B5
519-660-8669 Fax: 519-660-8525

The SITE Program assesses but does not approve or endorse technologies.

MAXYMILLIAN TECHNOLOGIES, INC.
(formerly CLEAN BERKSHIRES, INC.)
(Thermal Desorption System)

TECHNOLOGY DESCRIPTION:

The Maxymillian Technologies, Inc., mobile Thermal Desorption System (TDS) uses rotary kiln technology to remove contaminants from soils. The TDS can remediate soils contaminated with volatile organic compounds (VOC), semivolatile organic compounds (SVOC), and polynuclear aromatic hydrocarbons (PAH). The TDS is fully transportable, requires a footprint of 100-by-140 feet, and can be set up on site in 4 to 6 weeks. The system combines high throughput with the ability to remediate mixed consistency soil, including sands, silts, clays, and tars.

The TDS consists of the following components (see figure below):

- Waste feed system
- Rotary kiln drum desorber
- Cyclone
- Afterburner
- Quench tower
- Baghouse
- Fan and exhaust stack
- Multistage dust suppression system
- Process control room

Soil is first shredded, crushed, and screened to achieve a uniform particle size of less than 0.75 inch. Feed soils are also mixed to achieve uniform moisture content and heating value.

The thermal treatment process involves two steps: contaminant volatilization followed by gas treatment. During the volatilization step, contaminated materials are exposed to temperatures ranging from 600 to 1,000 °F in a co-current flow rotary kiln drum desorber where contaminants volatilize to the gas phase. Clean soils are then discharged through a multistage dust suppression system for remoisturization and are stockpiled for testing.

The gas and particulate stream passes from the kiln to the cyclone, where coarse particles are removed. The stream then enters the afterburner, which destroys airborne contaminants at temperatures ranging from 1,600 to 2,000 °F. The gas stream is cooled by quenching before passing through a high-efficiency baghouse, where fine particles are removed. The clean gas is then released to the atmosphere through a 60-foot stack. Processed soil, after discharge from the dust suppression

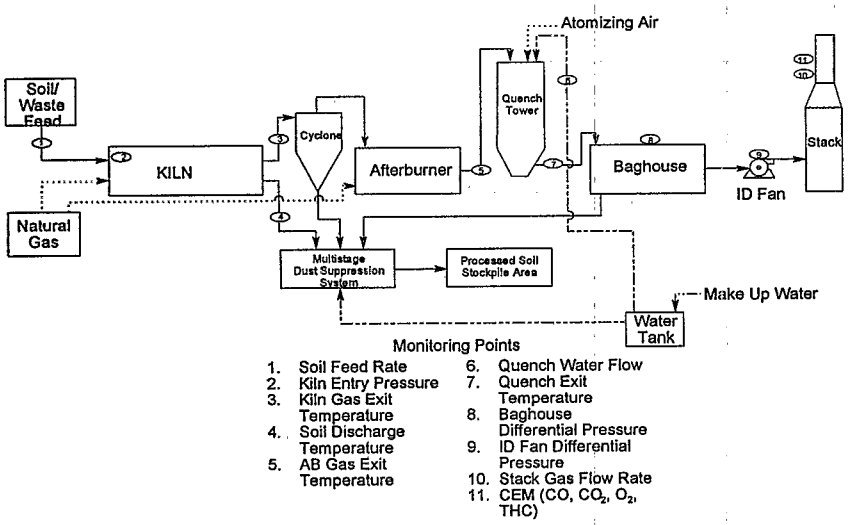

Mobile Thermal Desorption System

The SITE Program assesses but does not approve or endorse technologies.

system, is stockpiled and allowed to cool prior to sampling.

WASTE APPLICABILITY:

The TDS is designed to remove a wide variety of contaminants from soil, including VOCs, SVOCs, PAHs, coal tars, and cyanide.

STATUS:

The TDS was accepted into the SITE Demonstration Program in 1993. The demonstration was conducted in November and December 1993 at the Niagara Mohawk Power Corporation Harbor Point site, a former gas plant in Utica, New York. During the demonstration, the TDS processed three replicate runs of four separate waste streams. Stack emissions and processed soil were measured to determine achievement of cleanup levels. The Demonstration Bulletin (EPA/540/MR-94/507) and Technology Capsule (EPA/540/R-94/507a) are available from EPA.

Following the SITE demonstration, the TDS was chosen to remediate approximately 17,000 tons of VOC-contaminated soil at the Fulton Terminals Superfund site in Fulton, New York. This project was completed in 1995. The system has since been moved to a location in North Adams, Massachusetts.

DEMONSTRATION RESULTS:

Results from the SITE Demonstration are summarized below:

- The TDS achieved destruction removal efficiencies (DRE) of 99.99 percent or better in all 12 runs using total xylenes as a volatile principal organic hazardous constituent (POHC).
- DREs of 99.99 percent or better were achieved in 11 of 12 runs using naphthalene as a semivolatile POHC.
- Average concentrations for critical pollutants in treated soils were 0.066 milligram per kilogram (mg/kg) benzene, toluene, ethylbenzene, and xylene (BTEX); 12.4 mg/kg PAHs; and 5.4 mg/kg total cyanide.
- Comparison of the dry weight basis concentration of pollutants in the feed and treated soil showed the following average removal efficiencies: 99.9 percent for BTEX; 98.6 percent for PAHs; and 97.4 percent for total cyanide.
- The TDS showed good operating stability during the demonstration with only a minor amount of downtime.

FOR FURTHER INFORMATION:

EPA PROJECT MANAGER:
Ronald Lewis
U.S. EPA
National Risk Management Research Laboratory
26 West Martin Luther King Drive
Cincinnati, OH 45268
513-569-7856
Fax: 513-569-7105

TECHNOLOGY DEVELOPER CONTACT:
Neal Maxymillian
Maxymillian Technologies, Inc.
84 State Street
Boston, MA 02109
617-557-6077
Fax: 617-557-6088

The SITE Program assesses but does not approve or endorse technologies.

MORRISON KNUDSEN CORPORATION/ SPETSTAMPONAZHGEOLOGIA ENTERPRISES
(Clay-Based Grouting Technology)

TECHNOLOGY DESCRIPTION:

Morrison Knudsen Corporation (MK) is working under a joint venture agreement with Spetstamponazhgeologia Enterprises (STG) of Ukraine to demonstrate the effectiveness of a clay-based grouting technology. This technology uses clay slurries as a base for grout solutions, which are injected into bedrock fracture systems to inhibit or eliminate groundwater flow in these pathways. The clay slurries may also be used as a base for slurry wall construction.

The MK/STG clay-based grouting technology is an integrated method involving three primary phases: obtaining detailed site characteristics; developing a site-specific grout formulation; and grout mixing and injection. The first phase, site characterization, includes obtaining geophysical, geochemical, mineralogical, and hydrogeological information about the target area.

The second phase, a site-specific grout formulation, is developed in the laboratory. The overall properties of clay-based grout depend on the physical and mechanical properties of the clay, cement, and other additives. Formulated clay-based grouts are viscoplastic systems composed primarily of clay mineral mortar and structure-forming cement. The clay is normally a kaolin/illite obtained from a local source; other additives may be required. The formulation is laboratory-tested to determine suitability for the desired application.

The third phase is grout mixing and placement. The process for preparing and injecting the clay-based grout is shown in the diagram below. Boreholes drilled during the site characterization phase may be used for grout placement. Additional boreholes may be drilled to complete the injection program. A quality assurance program ensures that placement and project

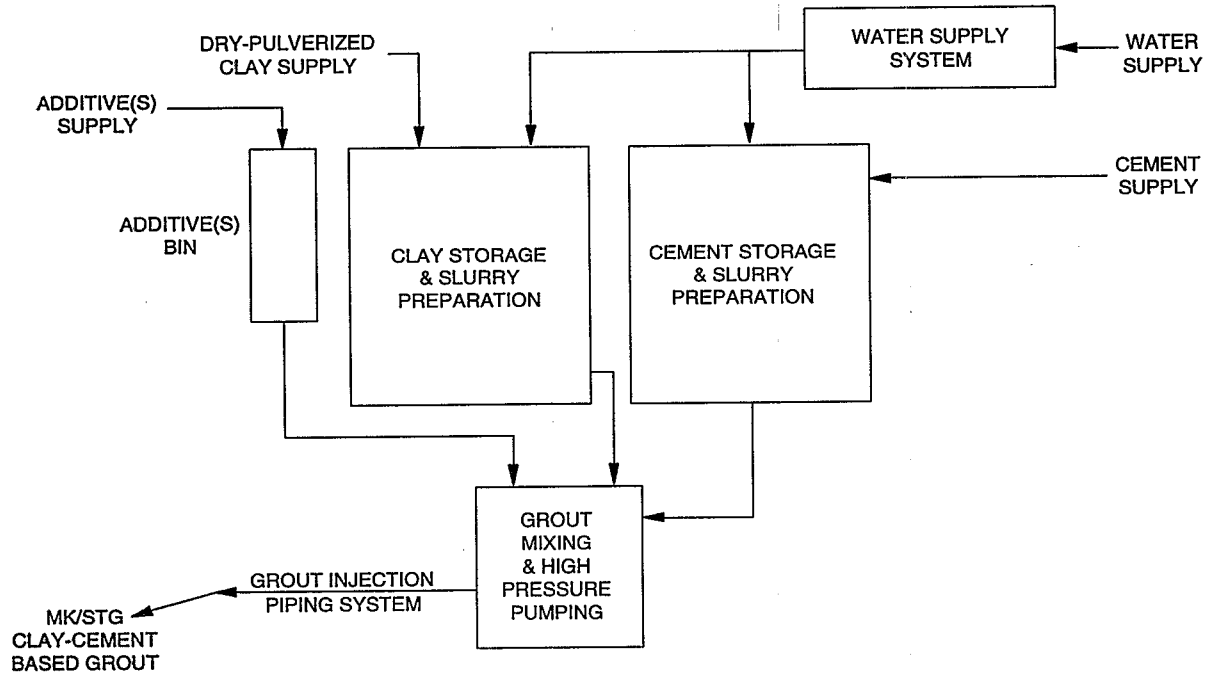

Process Flow Diagram of the Clay-Based Grouting Technology

The SITE Program assesses but does not approve or endorse technologies.

objectives are met. After injection, the clay-based grout retains its plasticity and does not crystallize, providing permanent underground protection.

WASTE APPLICABILITY:

This technology is suitable for providing a flow barrier to groundwater contaminated with both heavy metals and organics. The clay-based grout can be formulated to withstand detrimental conditions such as low pH. The technology can be used at inactive mine sites that produce acid mine drainage. Other potential applications include liquid effluent control from landfills, containment of groundwater contaminated with chemicals or radionuclides, and reduction of brine inflows.

STATUS:

This technology was accepted into the SITE Demonstration Program in winter 1993. It was partially installed in fall 1994 at the abandoned Mike Horse Mine site in Montana; operations were suspended due to winter weather conditions. The third phase, to complete installation of the grout, was canceled due to EPA budget constraints. The demonstration was completed in 1996, but the technology was not fully evaluated due to loss of accessibility to the site.

Over 200 projects using this technology have been completed during the last 20 years in the former Soviet Union and Eastern block countries, as well as in China and Australia. The technology has not been applied in the United States or western hemisphere other than at the Mike Horse Mine site.

FOR FURTHER INFORMATION:

EPA PROJECT MANAGER:
Jack Hubbard
U.S. EPA
National Risk Management Research Laboratory
26 West Martin Luther King Drive
Cincinnati, OH 45268
513-569-7507
Fax: 513-569-7620

TECHNOLOGY DEVELOPER CONTACTS:
Kathryn Levihn
Rick Raymondi
Morrison Knudsen Corporation/STG
P.O. Box 73
Boise, ID 83729
208-386-6115
Fax: 208-386-6669

The SITE Program assesses but does not approve or endorse technologies.

NATIONAL RISK MANAGEMENT RESEARCH LABORATORY
(Base-Catalyzed Decomposition Process)

TECHNOLOGY DESCRIPTION:

The base-catalyzed decomposition (BCD) process is a chemical dehalogenation technology developed by the National Risk Management Research Laboratory in Cincinnati, Ohio. The process is initiated in a medium-temperature thermal desorber (MTTD) at temperatures ranging from 600 to 950 °F. Sodium bicarbonate is added to contaminated soils, sediments, or sludge matrices containing hazardous chlorinated organics including polychlorinated biphenyls (PCB) and polychlorinated dioxins and furans. Chlorinated contaminants that are thermally desorbed from the matrix are condensed and treated by the BCD process. The BCD process chemically detoxifies the condensed chlorinated organic contaminants by removing chlorine from the contaminants and replacing it with hydrogen.

ETG Environmental, Inc. (ETG), and Separation and Recovery Systems, Inc. (SRS), developed the THERM-O-DETOX® and SAREX® systems and combined them with the BCD process chemistry. The combined process begins by initiating solid-phase dechlorination in the MTTD step (see figure below). In addition to the dechlorination that occurs in the MTTD, organics are thermally desorbed from the matrix, and are condensed and sent to the BCD liquid tank reactor (LTR). Reagents are then added and heated to 600 to 650 °F for 3 to 6 hours to dechlorinate the remaining organics. The treated residuals are recycled or disposed of using standard, commercially available methods. Treated, clean soil can be recycled as on-site backfill.

ETG has continued to develop the THERM-O-DETOX® system and now offers continuous systems and batch vacuum systems. The batch vacuum system offers greater operational flexibility for removal and destruction of high hazard, high boiling point contaminants to ensure that treatment standards are met. The vapor recovery system can be set up to use noncontact condensers or chillers and additional final polishing steps to meet the most stringent air emission standards.

WASTE APPLICABILITY:

The BCD process can treat soils, sediments, and sludges contaminated with the following chlorinated compounds: halogenated semivolatile organic compounds (SVOC), including herbicides and pesticides; PCBs; pentachlorophenol (PCP) and other chlorinated phenols; and polychlorinated dioxins and furans.

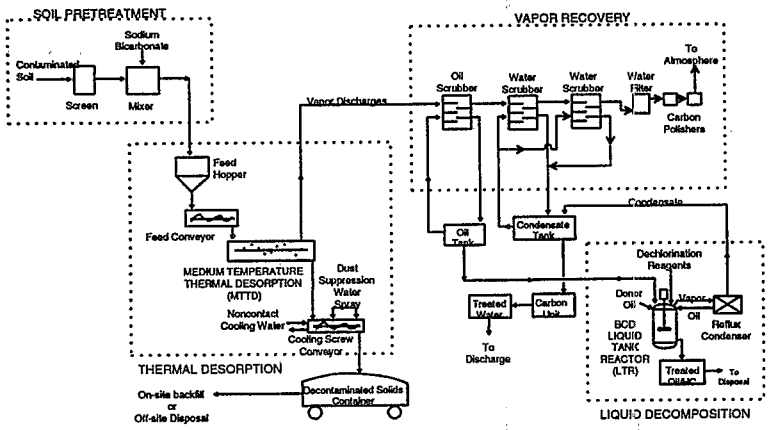

Base-Catalyzed Decomposition (BCD) Process

The SITE Program assesses but does not approve or endorse technologies.

STATUS:

The combined BCD process was demonstrated under the SITE Program at the Koppers Company Superfund site in Morrisville, North Carolina, from August through September 1993. The process removed PCP from clay soils to levels below those specified in the Record of Decision. The process also removed dioxins and furans from contaminated soil to 2,3,7,8-tetrachlorodibenzo-p-dioxin equivalent concentrations less than the concentration specified in the Record of Decision.

ETG is also currently operating the batch vacuum system at a New York State Department of Environmental Conservation cleanup site in Binghamton, New York. Approximately 1,500 cubic yards of soil contaminated with herbicides pesticides, dioxins, and furans (F027 waste) are being treated. The Michigan Department of Natural Resources has also approved BCD for a project involving treatment of about 200 cubic yards of F027 soils. At another site, multiple systems will treat soils contaminated with chlorinated volatile organic compounds and high boiling point (800-1150 °F) organic lubricants. The batch vacuum system has also been used to treat sludges at an operating refinery in Puerto Rico and a chemical company in Texas.

For information on the SAREX® system, see the profile for SRS in the Demonstration Program section (ongoing projects).

DEMONSTRATION RESULTS:

The SITE demonstration consisted of four test runs in the MTTD and two test runs in the LTR. Feed soil consisted of a dry, clayey silt and had a residence time of 1 to 2 hours in the MTTD, which was heated to 790 °F to 850 °F. The MTTD off-gases were treated by passing through an oil scrubber, water scrubbers, and carbon filters. The oil from the oil scrubber was transferred to the LTR for BCD treatment. The oil in each LTR test run was batch-processed for 3 to 4 hours at 600 to 630°F.

Key findings from the SITE demonstration are summarized as follows:

- The MTTD achieved removal efficiencies of 99.97 percent or better for PCP and 99.56 percent or better for total dioxins and total furans.
- The treated soils were well below toxicity characteristic leaching procedure limits for SVOCs.
- Treated soil met the cleanup goal of 95 parts per million PCP in all test runs. Treated soil also met a cleanup goal of 7 micrograms per kilogram 2,3,7,8-tetrachlorodibenzo-p-dioxin equivalents in all test runs.
- The LTR batch tests reduced PCP concentrations by 96.89 percent or better, and total dioxin and total furan concentrations by 99.97 percent or better.

FOR FURTHER INFORMATION:

EPA PROJECT MANAGER:
Terrence Lyons
U.S. EPA
National Risk Management Research Laboratory
26 West Martin Luther King Drive
Cincinnati, OH 45268
513-569-7589
Fax: 513-569-7676

TECHNOLOGY DEVELOPER CONTACTS:
George Huffman
U.S. EPA
National Risk Management Research Laboratory
26 West Martin Luther King Drive, MS-445
Cincinnati, OH 45268
513-569-7431
Fax: 513-569-7549

Yei-Shong Shieh or Steven Detwiler
ETG Environmental, Inc.
16 Hagerty Boulevard
West Chester, PA 19382-7594
610-431-9100
Fax: 610-431-9140

The SITE Program assesses but does not approve or endorse technologies.

NATIONAL RISK MANAGEMENT RESEARCH LABORATORY
(Volume Reduction Unit)

TECHNOLOGY DESCRIPTION:

The volume reduction unit (VRU) is a pilot-scale, mobile soil washing system designed to remove organic contaminants and metals from soil through particle size separation and solubilization. The VRU can process 100 pounds of soil (dry weight) per hour.

The process subsystems consist of soil handling and conveying, soil washing and coarse screening, fine particle separation, flocculation-clarification, water treatment, and utilities. The VRU is controlled and monitored with conventional industrial process instrumentation and hardware.

WASTE APPLICABILITY:

The VRU can treat soils that contain organics such as creosote, pentachlorophenol (PCP), pesticides, polynuclear aromatic hydrocarbons (PAH), volatile organic compounds, and semivolatile organic compounds. The VRU also removes metals.

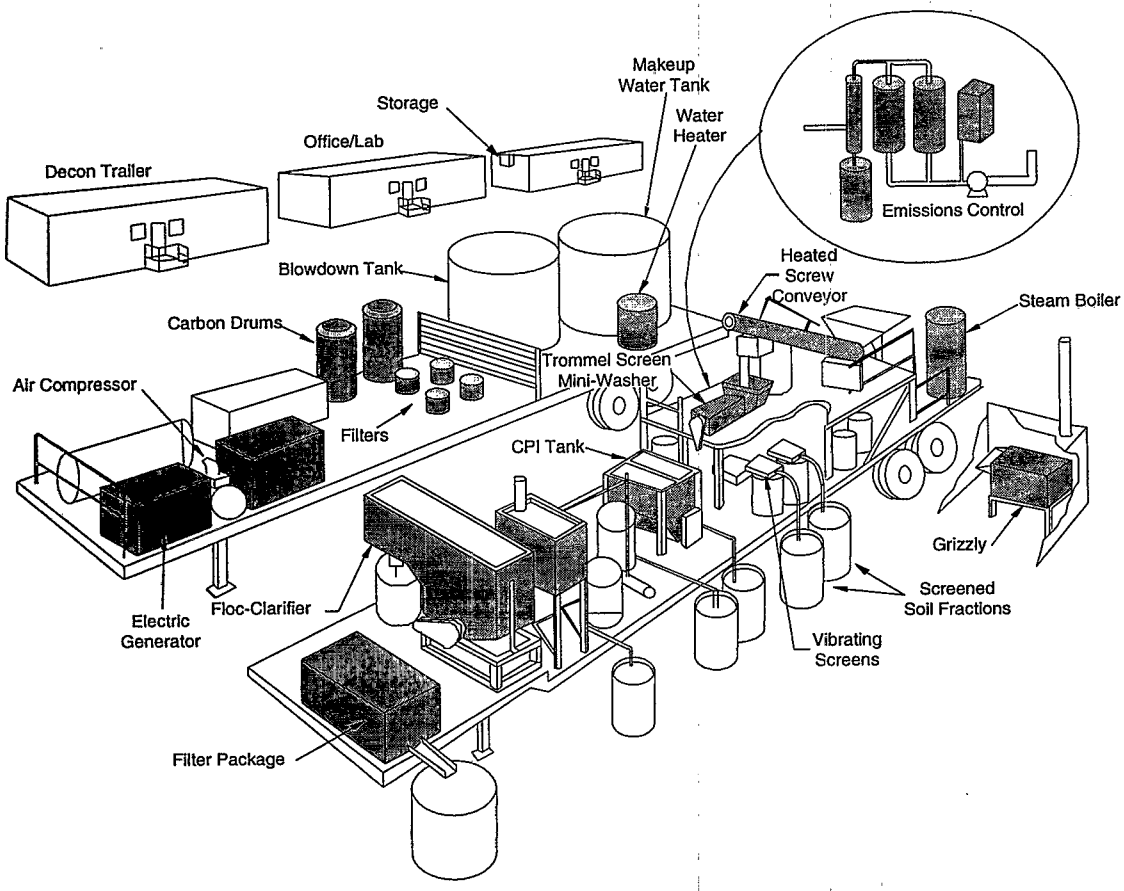

Typical VRU Operational Setup

The SITE Program assesses but does not approve or endorse technologies.

STATUS:

The VRU was accepted into the SITE Demonstration Program in summer 1992. The demonstration was conducted in November 1992 at the former Escambia Treating Company in Pensacola, Florida. The facility used PCP and creosote PAHs to treat wood products from 1943 to 1982. The Applications Analysis Report (EPA/540/AR-93/508) is available from EPA.

DEMONSTRATION RESULTS:

During the demonstration, the VRU operated at a feed rate of approximately 100 pounds per hour and a wash water-to-feed ratio of about six to one. The following physical wash water conditions were created by varying the surfactant, pH, and temperature:

- Condition 1 - no surfactant, no pH adjustment, no temperature adjustment
- Condition 2 - surfactant addition, no pH adjustment, no temperature adjustment
- Condition 3 - surfactant addition, pH adjustment, and temperature adjustment

The table below summarizes the analytical data.

FOR FURTHER INFORMATION:

EPA PROJECT MANAGER:
Teri Richardson
U.S. EPA
National Risk Management Research Laboratory
26 West Martin Luther King Drive
Cincinnati, OH 45268
513-569-7949
Fax: 513-569-7105

TECHNOLOGY DEVELOPER CONTACT:
Richard Griffiths
U.S. EPA
National Risk Management Research Laboratory
Center Hill Facility
5595 Center Hill Road
Cincinnati, OH 45224
513-569-7832
Fax: 513-569-7879

	Condition (%)		
	1	2	3
Average PCP removal	80	93	97
Average PAH removal	79	84	96
Feed soil returned as washed soil	96	96	81
Mass balance of total mass	104	113	98
Mass balance of PCPs	108	60	24
Mass balance of PAHs	87	60	17

Demonstration Data

The SITE Program assesses but does not approve or endorse technologies.

NATIONAL RISK MANAGEMENT RESEARCH LABORATORY and INTECH 180 CORPORATION
(Fungal Treatment Technology)

TECHNOLOGY DESCRIPTION:

This biological treatment system uses lignin-degrading fungi to treat excavated soils. These fungi have been shown to biodegrade a wide catalogue of organic contaminants.

The contaminated soil is inoculated with an organic carrier infested with the selected fungal strain. The fungi break down soil contaminants, using enzymes normally produced for wood degradation as well as other enzyme systems.

This technology has the greatest degree of success when optimal growing conditions for the fungi are used. These conditions include moisture control (at 90 percent of field capacity), and temperature and aeration control. Organic nutrients such as peat may be added to soils deficient in organic carbon.

WASTE APPLICABILITY:

This biological treatment system was initially applied to soil contaminated with organic chemicals found in the wood-preserving industry. These contaminants are composed of chlorinated organics and polynuclear aromatic hydrocarbons (PAH). The treatment system may remediate different contaminants and combinations of contaminants with varying degrees of success. In particular, the SITE Demonstration Program evaluated how well white rot fungi degrade pentachlorophenol (PCP) in combination with creosote PAHs.

STATUS:

This biological treatment system was accepted into the SITE Demonstration Program in April 1991. In September 1991, a treatability study was conducted at the Brookhaven Wood Preserving site in Brookhaven, Mississippi. Site soils were contaminated with 200 to 5,200 milligrams per kilogram (mg/kg) PCP and up to 4,000 mg/kg PAHs.

A full-scale demonstration of this fungal treatment technology was completed in November 1992 to obtain economic data. The Demonstration Bulletin (EPA/540/MR-93/505) is available from EPA.

The extent of treatment in the full-scale demonstration was disappointing for the time of treatment. The full-scale demonstration was hampered by excessive rainfall which did not permit the treatment beds to be sufficiently tilled. Without this processing, oxygen-depleted conditions developed, leading to loss of fungal biomass and activity. Soil bed applications of this technology may not be suitable in climates of high rainfall.

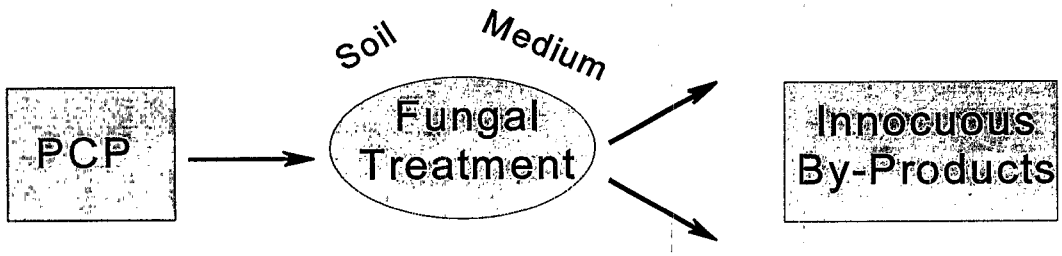

In Situ White Rot Fungal Treatment of Contaminated Soil

The SITE Program assesses but does not approve or endorse technologies.

Current costs of fungal treatment operation are estimated at $150 to $200 per ton. Lower costs may be achieved with new inoculum formulations which permit reduction in the amount of inoculum mass required for treatment.

DEMONSTRATION RESULTS:

The full-scale project involved a 0.25-acre plot of contaminated soil and two smaller control plots. The soil was inoculated with *Phanaerochaete sordida*, a species of lignin-degrading fungus. No other amendments were added to the prepared soil. Field activities included tilling and watering all plots. No nutrients were added. The study was conducted for 20 weeks.

Some key findings from the demonstration were:

- Levels of PCP and the target PAHs found in the underlying sand layer and the leachate from each of the plots were insignificant, indicating low leachability and loss of these contaminants due to periodic irrigation of the soil and heavy rainfall.
- Levels of PCP, the target PAHs, and dioxins in the active air samples collected during the soil tilling events were insignificant, indicating a very low potential for airborne contaminant transport.
- Air emissions data showed that soil tilling activities did not pose significant hazards to field technicians. Contaminated soil, underlying sand, and leachate had no significant contamination.

FOR FURTHER INFORMATION:

EPA PROJECT MANAGER:
Teri Richardson
U.S. EPA
National Risk Management Research Laboratory
26 West Martin Luther King Drive
Cincinnati, OH 45268
513-569-7949
Fax: 513-569-7105

TECHNOLOGY DEVELOPER CONTACTS:
John Glaser
U.S. EPA
National Risk Management Research Laboratory
26 West Martin Luther King Drive
Cincinnati, OH 45268
513-569-7568
Fax: 513-569-7105

Richard Lamar
INTECH 180 Corporation
1770 N. Research Parkway, Suite 100
North Logan, UT 84341
801-753-2111
Fax: 801-753-8321

The SITE Program assesses but does not approve or endorse technologies.

NATIONAL RISK MANAGEMENT RESEARCH LABORATORY and IT CORPORATION
(Debris Washing System)

TECHNOLOGY DESCRIPTION:

This technology was developed by EPA's National Risk Management Research Laboratory and IT Corporation (IT) for on-site decontamination of metallic and masonry debris at Comprehensive Environmental Response, Compensation, and Liability Act sites. The entire system is mounted on three 48-foot flatbed semi-trailers and can be readily transported from site to site.

The full-scale debris washing system (DWS) is shown in the figure below. The DWS consists of dual 4,000-gallon spray-wash chambers that are connected to a detergent solution holding tank and rinse water holding tank. Debris is placed into one of two 1,200-pound baskets, which in turn is placed into one of the spray-wash chambers using a 5-ton crane integral to the DWS. If debris is large enough, the crane places it directly into one of the two chambers. Process water is heated to 160 °F using a diesel-fired, 2,000,000-British-thermal-unit-per-hour (Btu/hr) water heater. The water is continuously reconditioned using particulate filters, an oil-water separator, and other devices such as charcoal columns or ion-exchange columns. About 8,000 to 10,000 gallons of water is required for the decontamination process. The system is controlled by an operator stationed in a trailer-mounted control room.

WASTE APPLICABILITY:

The DWS can be applied on site to various types of debris (scrap metal, masonry, or other solid debris such as stones) contaminated with hazardous chemicals such as pesticides, dioxins, polychlorinated biphenyls (PCB), or hazardous metals.

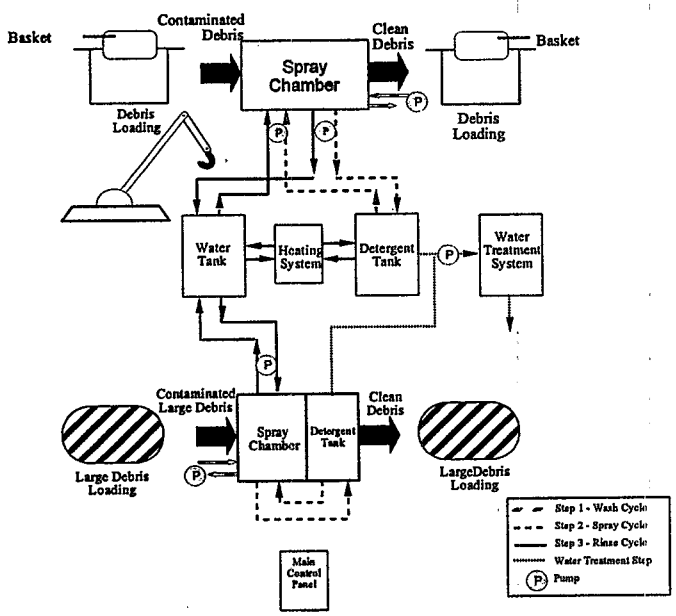

Pilot-Scale Debris Washing System

The SITE Program assesses but does not approve or endorse technologies.

STATUS:

The first pilot-scale tests were performed in September 1988 at the Carter Industrial Superfund site in Detroit, Michigan. An upgraded pilot-scale DWS was tested at a PCB-contaminated Superfund site in Hopkinsville, Kentucky in December 1989. The DWS was also field tested in August 1990 at the Shaver's Farm Superfund site in Walker County, Georgia. The contaminants of concern were benzonitrile and Dicamba. After being cut into sections, 55-gallon drums were decontaminated in the DWS.

Results from the SITE demonstration have been published in a Technology Evaluation Report (EPA/540/5-91/006a), entitled "Design and Development of a Pilot-Scale Debris Decontamination System" and in a Technology Demonstration Summary (EPA/540/S5-91/006).

In 1993, a manual version of the full-scale DWS was used to treat PCB-contaminated scrap metal at the Summit Scrap Yard in Akron, Ohio. During the 4-month site remediation, 3,000 tons of PCB-contaminated scrap metal (motors, cast iron blocks) was cleaned on site. The target level of 7.7 μg/100 cm^2 was met, in most cases, after a single treatment with the DWS. The cleaned scrap was purchased by a scrap smelter for $52 per ton. The net costs for the on-site debris decontamination ranged from $50 to $75 per ton. The National Risk Management Research Laboratory and IT estimate that the system can decontaminate 50 to 120 tons of typical debris per day.

DEMONSTRATION RESULTS:

At the Carter Industrial Superfund site, PCB reductions averaged 58 percent in batch 1 and 81 percent in batch 2. Design changes based on these tests were made to the DWS before additional field testing.

At the Hopkinsville, Kentucky site, PCB levels on the surfaces of metallic transformer casings were reduced to less than or equal to 10 micrograms PCB per 100 square centimeters (μg/cm^2). All 75 contaminated transformer casings on site were decontaminated to EPA cleanup criteria and sold to a scrap metal dealer.

At the Shaver's Farm Superfund site, benzonitrile and Dicamba levels on the drum surfaces were reduced from the average pretreatment concentrations of 4,556 and 23 μg/100 cm^2 to average concentrations of 10 and 1 μg/100 cm^2, respectively.

FOR FURTHER INFORMATION:

EPA PROJECT MANAGER:
Donald Sanning
U.S. EPA
National Risk Management Research Laboratory
26 West Martin Luther King Drive
Cincinnati, OH 45268
513-569-7875
Fax: 513-569-7620

TECHNOLOGY DEVELOPER CONTACTS:
Michael Taylor or Majid Dosani
IT Corporation
11499 Chester Road
Cincinnati, OH 45246-4012
513-782-4700
Fax: 513-782-4807

The SITE Program assesses but does not approve or endorse technologies.

NATIONAL RISK MANAGEMENT RESEARCH LABORATORY, UNIVERSITY OF CINCINNATI, and FRX, INC.
(Hydraulic Fracturing)

TECHNOLOGY DESCRIPTION:

Hydraulic fracturing is a physical process that creates fractures in soils to enhance fluid or vapor flow in the subsurface. The technology places fractures at discrete depths with hydraulic pressurization at the base of a borehole. These fractures are placed at specific locations and depths to increase the effectiveness of treatment technologies such as soil vapor extraction, in situ bioremediation, and pump-and-treat systems. The technology is designed to enhance remediation in less permeable geologic formations.

The fracturing process begins by injecting water into a sealed borehole until the water pressure exceeds a critical value and a fracture is nucleated (see photograph below). A slurry composed of a coarse-grained sand, or other granular material, and guar gum gel is then injected as the fracture grows away from the well. After pumping, the grains hold the fracture open while an enzyme additive breaks down the viscous fluid. The thinned fluid is pumped from the fracture, forming a permeable subsurface channel suitable for delivering or recovering a vapor or liquid. These fractures function as pathways for fluid movement, potentially increasing the effective area available for remediation.

The hydraulic fracturing process is used in conjunction with soil vapor extraction technology to enhance recovery of contaminated soil vapors. Hydraulic fractures have recently been used to improve recovery of light nonaqueous phase liquids by increasing recovery of free product and controlling the influence of underlying water. Hydraulically induced fractures are used as channels for fluids and nutrients during in situ bioremediation. The technology has the potential to deliver nutrients and other materials to the subsurface solids useful in bioremediation. Solid nutrients or oxygen-releasing granules can be injected into the fractures.

Hydraulic Fracturing Process (Well is at center of photograph)

The SITE Program assesses but does not approve or endorse technologies.

Real-time techniques for measuring ground surface deformation have been developed to monitor the fracture positions in the subsurface.

WASTE APPLICABILITY:

Hydraulic fracturing is appropriate for enhancing soil and groundwater remediation. The technology can channel contaminants or wastes for soil vapor extraction, bioremediation, or pump-and-treat systems.

STATUS:

The hydraulic fracturing technology was accepted into the SITE Demonstration Program in July 1991. Demonstrations have been conducted in Oak Brook, Illinois and Dayton, Ohio. The hydraulic fracturing process was integrated with soil vapor extraction at the Illinois site and with in situ bioremediation at the Ohio site. The project was completed in September 1992. The Technology Evaluation and Applications Analysis Reports, which were published under one cover (EPA/540/R-93/505), and the Technology Demonstration Summary (EPA/540/SR-93/505) are available from EPA.

DEMONSTRATION RESULTS:

The first demonstration was conducted at a Xerox Corporation site in Oak Brook, Illinois, where a vapor extraction system has been operating since early 1991. The site is contaminated with ethylbenzene, 1,1-dichloroethane, trichloroethene, tetrachloroethene, 1,1,1-trichloroethane, toluene, and xylene. In July 1991, hydraulic fractures were created in two of the four wells, at depths of 6, 10, and 15 feet below ground surface. The vapor flow rate, soil vacuum, and contaminant yields from the fractured and unfractured wells were monitored regularly. Results from this demonstration are as follows:

- Over a 1-year period, the vapor yield from hydraulically fractured wells was one order of magnitude greater than from unfractured wells.
- The hydraulically fractured wells enhanced remediation over an area 30 times greater than the unfractured wells.
- The presence of pore water decreased the vapor yield from wells; therefore, water must be prevented from infiltrating areas where vapor extraction is underway.

The technology was also demonstrated at a site near Dayton, Ohio, which is contaminated with benzene, toluene, ethylbenzene, and xylene (BTEX), and other petroleum hydrocarbons. In August 1991, hydraulic fractures were created in one of two wells at 4, 6, 8, and 10 feet below ground surface. Sampling was conducted before the demonstration and twice during the demonstration at locations 5, 10, and 15 feet north of the fractured and unfractured wells. Results from this demonstration are as follows:

- The flow of water into the fractured well was two orders of magnitude greater than in the unfractured well.
- The bioremediation rate near the fractured well was 75 percent higher for BTEX and 77 percent higher for total petroleum hydrocarbons compared to the rates near the unfractured well.

FOR FURTHER INFORMATION:

EPA PROJECT MANAGER:
Michael Roulier
U.S. EPA
National Risk Management Research Laboratory
26 West Martin Luther King Drive
Cincinnati, OH 45268
513-569-7796
Fax: 513-569-7620

TECHNOLOGY DEVELOPER CONTACT:
William Slack
FRX Inc.
P.O. Box 37945
Cincinnati, OH 45222
513-469-6040
Fax: 513-469-9747

The SITE Program assesses but does not approve or endorse technologies.

NEW YORK STATE DEPARTMENT OF ENVIRONMENTAL CONSERVATION/ENSR CONSULTING AND ENGINEERING and LARSEN ENGINEERS

(Ex Situ Biovault)

TECHNOLOGY DESCRIPTION:

The Ex Situ Biovault, developed by ENSR Consulting and Engineering (ENSR) and Larsen Engineers (Larsen), is a specially designed, aboveground soil pile designed to treat soils contaminated with volatile organic compounds (VOC) and semivolatile organic compounds (SVOC). The biovault is enclosed by a double liner system; the bottom half of the liner contains a leak detection system. The bottom half of the liner is supported by soil berms that serve as side walls.

To construct a biopile, a layer of gravel containing an air distribution system is placed on the bottom liner. The soil to be treated is then placed over the gravel. After placing the soil, a layer of sand containing a second air distribution system is placed on top of the soil. Soaker hoses are also placed on top of the pile. Finally, the top liner is placed on the pile and sealed at all seams. The air distribution systems are designed to control gas flows throughout the pile while the soaker hoses add water and nutrients. A sump is located in the lowest corner of the biovault with a pump that removes the liquids that drain through the soil pile. This liquid is amended with nutrients as needed and recirculated through the soaker hoses. Together, the sump and soaker hoses form the liquid management system (LMS).

One of the control parameters for biovault operation is the rate of air supply. For the SITE demonstration, two identical vaults were constructed. One vault was operated with a continuous supply of air throughout the course of treatment. In the other biovault, air was supplied intermittently in an effort to cycle the biovault between aerobic and anaerobic conditions.

WASTE APPLICABILITY:

The ex situ biovault is intended to treat soil contaminated with chlorinated and nonchlorinated VOCs, as well as SVOCs. Soil contaminated with VOCs was treated during the demonstration.

STATUS:

ENSR's and Larsen's ex situ biovault was accepted into the SITE Demonstration Program in June 1994. The pilot-scale, multivendor treatability demonstration (MVTD) was jointly sponsored by the New York State Department of

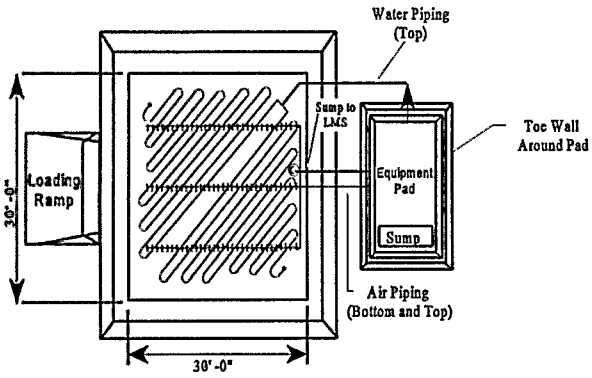

Schematic of the Ex Situ Biovault System

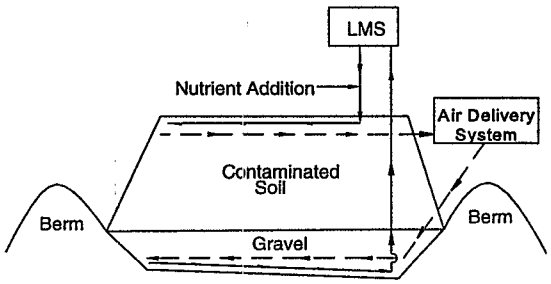

Cross Section of the
Ex Situ Biovault System

The SITE Program assesses but does not approve or endorse technologies.

Environmental Conservation (NYSDEC), the New York State Center for Hazardous Waste Management, and the SITE Program. The objectives of the MVTD were to (1) generate field data for biological processes, and (2) evaluate the performance of each biological process in meeting NYSDEC clean-up goals.

The demonstration was conducted from July to December 1994 at the Sweden 3-Chapman site in Sweden, New York. The soil at the site was contaminated with elevated levels of acetone, trichloroethene, tetrachloroethene, cis-1,2-dichloroethene, 2-butanone, 4-methyl-2-pentanone, and toluene. The final report is available from the vendor.

In addition to the ENSR and Larsen process, the following systems also were demonstrated:

- SBP Technologies, Inc., Vacuum-Vaporized Well System
- R.E. Wright Environmental, Inc., In Situ Bioventing Treatment System

For information on these technologies, refer to the NYSDEC profiles in the Demonstration Program section (completed projects).

The Demonstration Bulletin (EPA/540/MR-95/524) is available from EPA. The Innovative Technology Evaluation Report, which provides more detailed demonstration results, will be available in 1999.

DEMONSTRATION RESULTS:

The primary objective of the SITE demonstration was to determine the effectiveness of the biovaults in reducing the concentrations of six target VOCs. The results of the ex situ biovault technology demonstration were as follows:

- Soil concentrations of six target VOCs were significantly reduced over the 5-month demonstration period, but the treatment did not meet NYSDEC criteria.
- Analytical results and field measurements indicated that both biovaults supported biological processes.
- The aerobic and aerobic/anaerobic biovaults performed similarly.

The biovault process is sensitive to ambient temperatures, and cool temperatures during the operating period may have negatively impacted microbial activity. The developers suggest initiating biovault operation in the spring and discontinuing operation when weather conditions become too cold to sustain microbial activity.

FOR FURTHER INFORMATION:

EPA CONTACT:
Carolyn Acheson, Ph.D.
U.S. EPA
National Risk Management Research Laboratory
26 West Martin Luther King Drive
Cincinnati, OH 45268
513-569-7190
Fax: 513-569-7105

NEW YORK STATE CONTACTS:
Jim Harrington
New York State Department of Environmental Conservation
50 Wolf Road, Room 268
Albany, NY 12233-7010
518-457-0337
Fax: 518-457-9639

TECHNOLOGY DEVELOPER CONTACTS:
David Ramsden, Ph.D.
ENSR Consulting and Engineering
3000 Richmond Avenue
Houston, TX 77098
713-520-9900
Fax: 713-520-6802

N. Sathiyakumar, Ph.D., P.E.
Larsen Engineers
700 West Metro Park
Rochester, NY 14623-2678
716-272-7310
Fax: 716-272-0159

The SITE Program assesses but does not approve or endorse technologies.

NEW YORK STATE DEPARTMENT OF ENVIRONMENTAL CONSERVATION/SBP TECHNOLOGIES, INC.
(Vacuum-Vaporized Well System)

TECHNOLOGY DESCRIPTION:

The SBP Technologies, Inc. (SBP), remediation program uses an in situ Unterdruck-Verdampfer-Brunnen (UVB) vertical groundwater circulation well technology, which has been enhanced with an in situ bioreactor to treat soil and groundwater contaminated with chlorinated and non-chlorinated volatile organic compounds (VOC). This process consists of a specially adapted groundwater circulation well, reduced-pressure stripping reactor, an in situ bioreactor, and an aboveground vapor-phase bioreactor.

The UVB technology was developed by IEG mbH in Germany and is distributed in the U.S. by IEG Technologies Corporation. SBP obtained the rights to implement this technology and enhanced it to create a more effective in situ bioremediation technology.

The microbiologically enhanced vertical circulation well technology simultaneously treats the vadose zone, capillary fringe, and saturated zones. During the demonstration, a groundwater convection (circulation) cell was created radially within the aquifer around the 16-inch UVB well. The UVB well consisted of upper and lower screens separated by a solid riser casing. The lower screen was isolated from the upper screen by a packer, creating two separate screened zones. Contaminated groundwater flowed into the lower screen of the UVB well and was pumped to the upper section. The water rose through the in situ fixed film bioreactor, initially reducing the contaminant load. Groundwater then flowed to the in situ aerator/stripping reactor, where fresh ambient air was mixed with the contaminated groundwater.
The convection cell was developed by allowing the treated groundwater to exit into the upper aquifer. The untreated VOCs exiting the in situ bioreactor system were stripped before the groundwater flowed out of the upper screen into the aquifer as clean water. Oxygenated groundwater from the shallow aquifer circulated to the deep aquifer zone and through the fixed film bioreactor to provide for aerobic degradation. This circulation created a remediation circulation cell in a glacial till geologic formation.

In conjunction with the groundwater remediation, the upper double-cased screen in the well allowed for a one-way soil air flow from the vadose zone to the UVB. This one-way soil venting, created by the reduced-pressure developed in the well by the blower, simultaneously remediated the contaminated unsaturated and capillary fringe zones.

The off-gases from the in situ aerator/stripping reactor passed through an ex situ gas-phase bioreactor for further biotreatment followed by granular activated carbon treatment before they were vented. This bioreactor consisted of spirally wound, microporous, polyvinyl chloride-silica sheets that served as a biosupport for *Pseudomonas cepacia* (strain 17616), a known trichloroethene (TCE) degrader. VOCs in the off-gases, such as toluene, benzene, xylene, TCE, and others, were also biologically treated through a cometabolic process in the gas-phase bioreactor.

WASTE APPLICABILITY:

This technology treats soil and groundwater contaminated with chlorinated and nonchlorinated VOCs.

STATUS:

The UVB system was accepted into the SITE Demonstration Program in June 1994. The pilot-scale, multivendor treatability demonstration (MVTD) was jointly sponsored by the New York State Department of Environmental Conservation

The SITE Program assesses but does not approve or endorse technologies.

(NYSDEC), the New York State Center for Hazardous Waste Management, and the SITE Program. The objectives of the MVTD were to (1) generate field data for three biological processes, and (2) evaluate the performance of each biological process in meeting NYSDEC cleanup goals.

The demonstration took place at the Sweden 3-Chapman site in Sweden, New York. Field work began in July 1994 and was completed in fall 1995. Final reports from the demonstration are available from EPA.

The UVB demonstration coincided with the remediation of the site. Soil at the site contained elevated levels of TCE, acetone, tetrachloroethene, dichloroethene, and toluene. The contaminants of concern (COC) were monitored at 15 groundwater monitoring wells, across the in situ bioreactor, the vadose zone soils, and the ex situ bioreactor, to evaluate the system's performance. A dye tracer test was conducted to determine the extent of the groundwater circulation cell.

In addition to the SBP process, the following technologies were also demonstrated:

- R.E. Wright Environmental, Inc., In Situ Bioventing Treatment System
- ENSR Consulting and Engineering and Larsen Engineers Ex Situ Biovault

For information on these technologies, refer to the NYSDEC profiles in the Demonstration Program section (completed projects).

DEMONSTRATION RESULTS:

During the demonstration, an in situ vertical groundwater circulation cell was established with an effective radius of 40 feet. The UVB system reduced the concentration of COCs in groundwater. The in situ bioreactor provided biotreatment of the COCs in the dissolved phase; removal of COCs from soils was also demonstrated. An ex situ bioreactor was effective in treating off-gas vapors from the UVB system prior to final polishing. Mass balance calculations determined that at least 75 percent of the target COCs in soil and groundwater, within the UVB's radius of influence, were removed during the demonstration.

FOR FURTHER INFORMATION:

EPA PROJECT MANAGER:
Michelle Simon
U.S. EPA
National Risk Management Research Laboratory
26 West Martin Luther King Drive
Cincinnati, OH 45268
513-569-7469
Fax: 513-569-7676

TECHNOLOGY DEVELOPER CONTACTS:
Jim Harrington
New York State Department of Environmental Conservation
50 Wolf Road, Room 268
Albany, NY 12233-7010
518-457-0337
Fax: 518-457-9639

Richard Desrosiers
SBP Technologies, Inc.
106 Corporate Park Drive
White Plains, NY 10604
914-694-2280
Fax: 914-694-2286

The SITE Program assesses but does not approve or endorse technologies.

NEW YORK STATE DEPARTMENT OF ENVIRONMENTAL CONSERVATION/R.E. WRIGHT ENVIRONMENTAL, INC.

(In Situ Bioventing Treatment System)

TECHNOLOGY DESCRIPTION:

The R.E. Wright Environmental, Inc. (REWEI), process uses bioventing technology to induce aerobic biological degradation of chlorinated compounds. A series of extraction and injection wells is used to amend the soil environment, creating optimum growth conditions for the indigenous bacteria. Anhydrous ammonia and methane are injected into the subsurface to stimulate the growth of methanotrophic microorganisms. Methanotrophs have the enzymatic capabilities to degrade chlorinated solvents through a cometabolic process.

The treatment system consists of an injection and extraction well field and a soil gas extraction-amendment injection blower unit (see photograph below). The blower unit is operated in the vacuum mode long enough to adequately aerate the subsoil and provide oxygen for the aerobic bacteria. Injection wells are located between the extraction wells and are manifolded to the pressure port of the blower unit. Anhydrous ammonia is periodically injected into the subsoil to provide a source of nitrogen for the aerobic bacteria. In addition, methane gas is periodically injected to stimulate the growth of methanotrophs. The positive displacement blower unit is equipped with a moisture knockout tank, an automatic water discharge pump, and a control panel that allows remote operation of the system. Air and water discharges are typically treated with granular activated carbon prior to final discharge.

Normal system monitoring consists of periodic soil sampling and analysis and soil gas monitoring. Soil samples are collected and analyzed for volatile organic compounds (VOC), soil fertility parameters, and microbiological parameters such as trichloroethene (TCE)

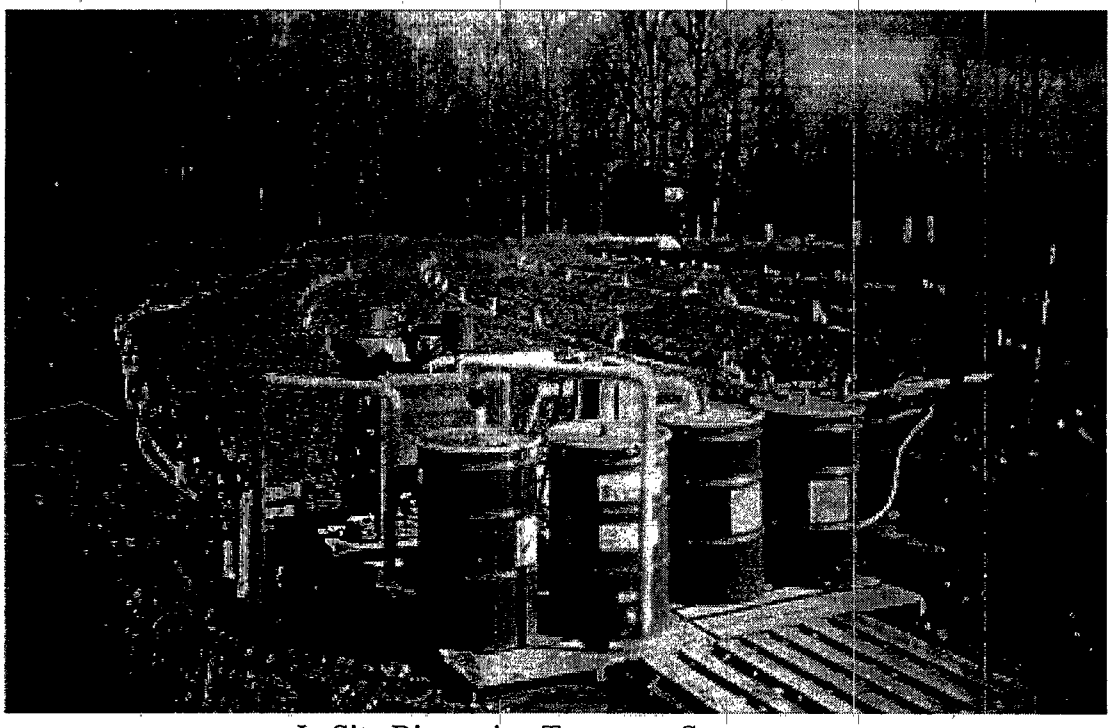

In Situ Bioventing Treatment System

The SITE Program assesses but does not approve or endorse technologies.

degraders and methanotrophs. In situ respiration tests are conducted to determine the relative activity of the bacteria in the soil.

WASTE APPLICABILITY:

The technology can treat both chlorinated and nonchlorinated VOCs and semivolatile organic compounds that are biodegradable. The REWEI process was developed to treat volatile chlorinated aliphatic and aromatic hydrocarbons in the unsaturated soil zone.

STATUS:

The REWEI process was accepted into the SITE Demonstration Program in June 1994. The REWEI process was part of a pilot-scale, multivendor treatability demonstration (MVTD) that was jointly sponsored by the New York State Department of Environmental Conservation (NYSDEC), the New York State Center for Hazardous Waste Management, and the SITE Program. The objectives of the MVTD were to (1) generate field data for three biological processes, and (2) evaluate the performance of each biological process in meeting NYSDEC cleanup goals.

The demonstration took place from July to December 1994 at the Sweden 3-Chapman site in Sweden, New York and coincided with the ongoing remediation of the site. Soil at the site contained elevated levels of TCE, acetone, tetrachloroethene, dichloroethene, and toluene. The Demonstration Bulletin (EPA/540/MR-95/525) is available from EPA. The Innovative Technology Evaluation Report, which provides more detailed demonstration results, will be available in 1997.

In addition to the REWEI process, the following technologies were also demonstrated:

- SBP Technologies, Inc., Vacuum-Vaporized Well system
- ENSR Consulting and Engineering and Larsen Engineers Ex Situ Biovault

For information on these technologies, refer to the NYSDEC profiles in the Demonstration Program section (completed projects).

DEMONSTRATION RESULTS:

The SITE demonstration results indicated that the REWEI process reduced contaminants in the soil. The initial mass of TCE in the soil was reduced by 92 percent with 80 percent removal attributed to biodegradation and 12 percent removed by vapor extraction. Results of the microbiological analyses indicate that the number of total heterotrophic, TCE-degrading, and methane-degrading microorganisms increased during treatment. The inorganic soil nitrogen content increased due to the subsurface injection of anhydrous ammonia.

FOR FURTHER INFORMATION:

EPA PROJECT MANAGER:
Greg Sayles
National Risk Management Research Laboratory
U.S. EPA
26 West Martin Luther Drive
Cincinnati, OH 45268
513-569-7607
Fax: 513-569-7105

TECHNOLOGY DEVELOPER CONTACTS:
Jim Harrington
New York State Department of Environmental Conservation
50 Wolf Road, Room 268
Albany, NY 12233-7010
518-457-0337
Fax: 518-457-9639

Richard Cronce
R.E. Wright Environmental, Inc.
3240 Schoolhouse Road
Middletown, PA 17057-3595
717-944-5501
Fax: 717-948-9398

The SITE Program assesses but does not approve or endorse technologies.

NORTH AMERICAN TECHNOLOGIES GROUP, INC.
(Oleophilic Amine-Coated Ceramic Chip)

TECHNOLOGY DESCRIPTION:

This hydrocarbon recovery technology is based on an oleophilic, amine-coated ceramic chip that separates suspended and dissolved hydrocarbons, as well as most mechanical and some chemical emulsions, from aqueous solutions. The oleophilic chip is manufactured by grafting a hydrophobic amine to a mineral support, in this case a ceramic substrate. Each granule is 0.6 to 1 millimeter in diameter, but is very porous and thus has a large surface area. The hydrophobic property of the amine coating makes each granule more effective for microfiltration of hydrocarbons in an unstable emulsion.

The figure below illustrates the process; the separator, filter, and coalescer unit is shown on the next page. The pressure-sensitive filtering bed is regenerated by automatic backflushing. This automatic regeneration eliminates the expense associated with regeneration of carbon and similar filtration media. Recovered hydrocarbons coalesce and can thus be removed by simple gravity separation.

This technology provides cost-effective oil and water separation, removes free and emulsified hydrocarbon contaminants, and significantly reduces hydrocarbon loading to air strippers and carbon systems. The technology can achieve a concentration of less than 7 parts per million oil and grease in the treated effluent.

WASTE APPLICABILITY:

The amine-coated granules have proven effective on a wide variety of hydrocarbons, including gasoline; crude oil; diesel fuel; benzene, toluene, ethylbenzene and xylene mixtures; and polynuclear aromatic hydrocarbons. The unit also removes hydrophobic chlorinated hydrocarbons such as pentachlorophenol, polychlorinated biphenyls, and trichloroethene, as well as vegetable and animal oils.

Treatment systems incorporating this technology have been designed for various applications, including (1) contamin ated groundwater pump-and-treat systems; (2) in-process oil and water separation; (3) filtration systems; (4) combined

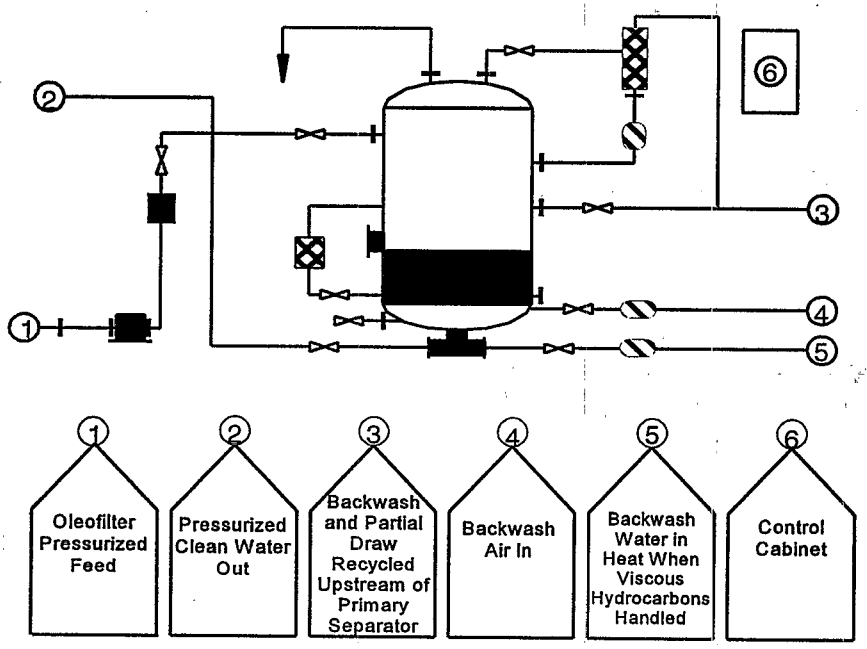

Schematic Diagram of the Oleofilter Technology

The SITE Program assesses but does not approve or endorse technologies.

oil and water separator-filter-coalescer systems for on-site waste reduction and material recovery; and (5) treatment of marine wastes (bilge and ballast waters).

STATUS:

This technology was accepted into the SITE Demonstration Program in December 1992. The SITE demonstration was completed in June 1994 at the Petroleum Products Corporation site in Fort Lauderdale, Florida. The site is a former oil recycling facility where groundwater has been contaminated with a variety of organic and inorganic constituents. The Demonstration Bulletin (EPA/540/MR-94/525) and Innovative Technology Evaluation Report (EPA/540/R-94/525) are available from EPA.

The technology has been used for several full-scale projects. Several separator-filter-coalescers (see figure below) are in use treating industrial process waters and oily wash waters.

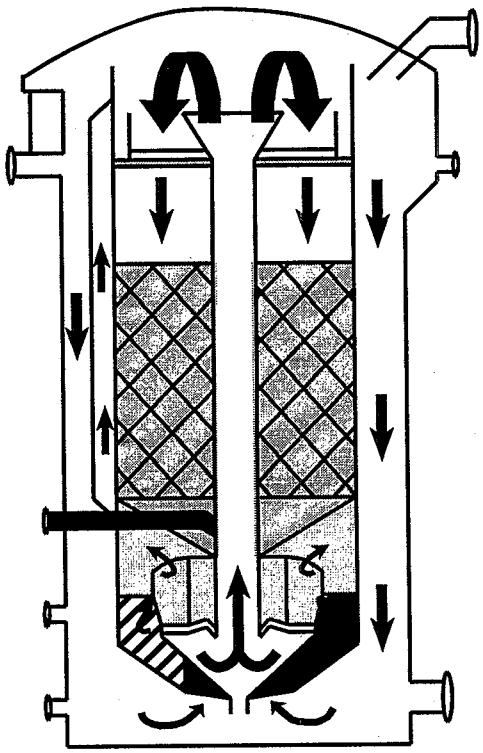

Separator, Filter, and Coalescer

DEMONSTRATION RESULTS:

For the demonstration, five separate evaluation periods (runs) were initiated. Each run used the same feed oil, except run four. The oil for run four was a 3:1 mixture of oil to kerosene. The average total recoverable petroleum hydrocarbon (TRPH) concentrations for the feed streams ranged from 422 to 2,267 milligrams per liter (mg/L). Preliminary data indicate that the system removed at least 90 percent of the TRPH from the emulsified oil and water feed stream.

For the runs where the system operated within normal design parameters, TRPH concentrations in the treated water effluent were reduced to 15 mg/L or less. The oleophilic granules achieved a 95 percent reduction of TRPH concentration for the runs with similar feed oil.

FOR FURTHER INFORMATION:

EPA PROJECT MANAGER:
Laurel Staley
U.S. EPA
National Risk Management Research Laboratory
26 West Martin Luther King Drive
Cincinnati, OH 45268
513-569-7863
Fax: 513-569-7620

TECHNOLOGY DEVELOPER CONTACT:
Tim Torrillion
North American Technologies Group, Inc.
4710 Bellaire Boulevard, Suite 301
Bellaire, TX 77401
713-662-2699
Fax: 713-662-3728

The SITE Program assesses but does not approve or endorse technologies.

NOVATERRA ASSOCIATES
(In Situ Soil Treatment [Steam and Air Stripping])

TECHNOLOGY DESCRIPTION:

This technology treats contaminated soils and contained groundwater by the simultaneous in situ injection of treatment agents below ground during active mixing by augers or drilling blades (see figure below). The in situ injection of steam and air during mixing strips the volatile organic compounds (VOC) and semivolatile organic compounds (SVOC) from the soil and contained groundwater. The removed organics are captured at the surface and disposed of in an environmentally safe manner.

The technology is implemented by a drill unit that can consist of a single or double blade or auger mounted on a large crane or backhoe. The diameter of the drill or auger can vary from 5 to 8 feet, and it is mounted on a kelly that reaches depths of 60 feet.

The steam and air are carried down the center of the kelly(s) and injected into the ground through jets located on the blade or auger arms. The steam is supplied by an oil- or natural gas-fired boiler at 450 °F and 500 pounds per square inch gauge (psig). The air heated by the compressor is injected at 250 °F and 200 psig. The steam heats the contaminants in the soil and contained water, increasing the vapor pressure of the VOCs and SVOCs and increasing their removal rates. The direct application of the steam on the soil thermally desorbs the VOCs and SVOCs, increasing their removal percentage. Almost all the VOCs and SVOCs of interest form azeotropes with steam that boil below 212 °F and contain low concentrations (such as a few percent) of contaminants. These azeotropes significantly increase contaminant removal rates, especially for the higher-boiling-point SVOCs.

The VOC- and SVOC-laden air and steam vapor stream removes the contamination to the surface where it can be captured, if necessary, in a metal container. The container, which makes a tight seal to the ground surface, is connected to a process stream by piping. A suction blower draws the waste stream to the process stream where it is collected or destroyed. The blower creates a slight vacuum in the container and piping as well as a positive displacement inward to the collection or destruction system, thus protecting the outside environment from contamination.

The simplest form of the process system uses a catalytic oxidizer or thermal oxidizer to destroy the contamination before exhausting to the atmosphere. When treating chlorinated VOCs and SVOCs, an acid scrubber can be added if

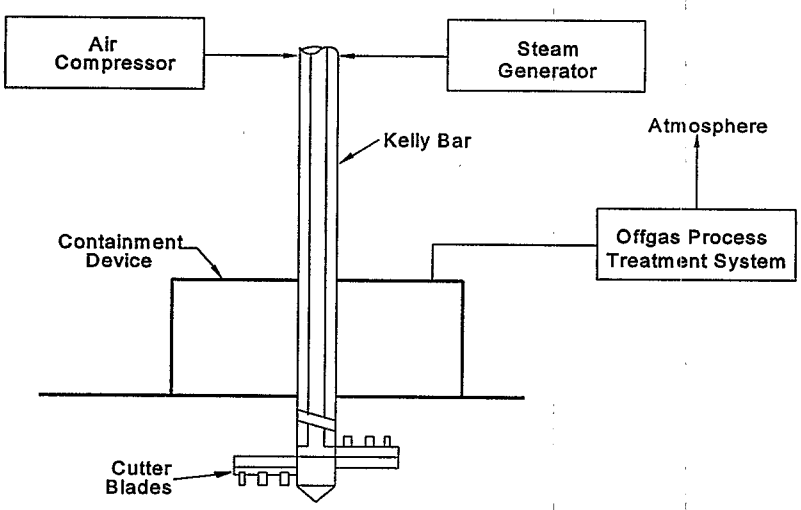

In Situ Soil Treatment Process Schematic

The SITE Program assesses but does not approve or endorse technologies.

required by the amount of material being processed. Another simple process uses activated carbon to recover the contamination. For the carbon to work efficiently, a cooling system must precede the carbon bed, so the process must also treat contaminated water. If recovery and reuse of the contamination is important or economically desirable, a process system that condenses the gas stream can be used.

The in situ soil treatment technology has also treated contaminated soil by injecting and mixing other agents. Chemical injection processes include the stabilization and solidification of heavy metals, neutralization of acids and bases, and oxidation. The technology has been successfully used to perform bioremediation. The equipment is capable of injecting cement into the soil and making slurry walls. The technology has the unique feature of being able to inject two materials simultaneously or sequentially.

WASTE APPLICABILITY:

This technology can treat solid materials which do not contain obstructions, including soils, sludges, lagoons, and the liquids contained within, such as water and dense and light nonaqueous-phase liquids. The technology is applicable to most VOCs and SVOCs, including pesticides. It is particularly applicable to free product and removal of highly concentrated contamination. It is most effective for removals of 95 to 99 percent of the contamination as a result of the low temperature thermal desorption. After treatment is completed, the soil can meet construction engineering requirements by compacting or injecting small amounts of cement.

STATUS:

This technology was accepted into the SITE Demonstration Program in 1989. A SITE demonstration was performed in September 1989 at the Annex Terminal, San Pedro, California. Twelve soil blocks were treated for VOCs and SVOCs. Liquid samples were collected during the demonstration, and the operating procedures were closely monitored and recorded. In January 1990, six blocks that had been previously treated in the saturated zone were analyzed by EPA methods 8240 and 8270.

The Applications Analysis Report (EPA/540/A5-90/008) was published in June 1991. The technology remediated 30,000 cubic yards at the Annex Terminal after completion of the SITE demonstration and has been used at five other contaminated sites.

DEMONSTRATION RESULTS:

The SITE technology demonstration yielded the following results:

- Removal efficiencies were greater than 85 percent for VOCs present in the soil.
- Removal efficiencies were greater than 55 percent for SVOCs present in the soil.
- Fugitive air emissions from the process were low.
- No downward migration of contaminants resulted from the soil treatment.
- The process treated 3 cubic yards of soil per hour.

FOR FURTHER INFORMATION:

EPA PROJECT MANAGER:
Paul dePercin
U.S. EPA
National Risk Management Research Laboratory
26 West Martin Luther King Drive
Cincinnati, OH 45268
513-569-7797
Fax: 513-569-7105
E-Mail: dePercin.Paul@epamail.epa.gov

TECHNOLOGY DEVELOPER CONTACT:
Phil La Mori
NOVATERRA Associates
2419 Outpost Drive
Los Angeles, CA 90068-2644
213-969-9788
Fax: 213-969-9782
E-mail: NOVATERRA@aol.com

The SITE Program assesses but does not approve or endorse technologies.

OHM REMEDIATION SERVICES CORP.
(formerly CHEMICAL WASTE MANAGEMENT, INC.)
(X*TRAX™ Thermal Desorption)

TECHNOLOGY DESCRIPTION:

The X*TRAX™ technology is a patented thermal desorption process that removes organic contaminants from soils, sludges, and other solid media (see photograph below). X*TRAX™ is not, however, an incinerator or a pyrolysis system. Chemical oxidation and reactions are discouraged by maintaining an inert environment and low treatment temperatures. Combustion by-products are not formed in X*TRAX™, as neither a flame nor combustion gases are present in the desorption chamber.

The organic contaminants are removed as a condensed liquid, which is characterized by a high heat rating. This liquid may then be destroyed in a permitted incinerator or used as a supplemental fuel. Low operating temperatures of 400 to 1,200 °F and low gas flow rates optimize treatment of contaminated media.

An externally fired rotary dryer volatilizes the water and organic contaminants from the contaminated media into an inert carrier gas stream. The inert nitrogen carrier gas transports the organic contaminants and water vapor out of the dryer. The carrier gas flows through a duct to the gas treatment system, where organic vapors, water vapors, and dust particles are removed and recovered. The gas first passes through a high-energy scrubber, which removes dust particles and 10 to 30 percent of the organic contaminants. The gas then passes through two condensers in series, where it is cooled to less than 40 °F.

Most of the carrier gas is reheated and recycled to the dryer. About 5 to 10 percent of the gas is separated from the main stream, passed through a particulate filter and a carbon adsorption system, and then discharged to the atmosphere. This discharge allows addition of make-up nitrogen to the system to keep oxygen concentrations below 4 percent (typically below 1 percent). The discharge also helps maintain a small negative pressure within the system and prevents potentially contaminated gases from

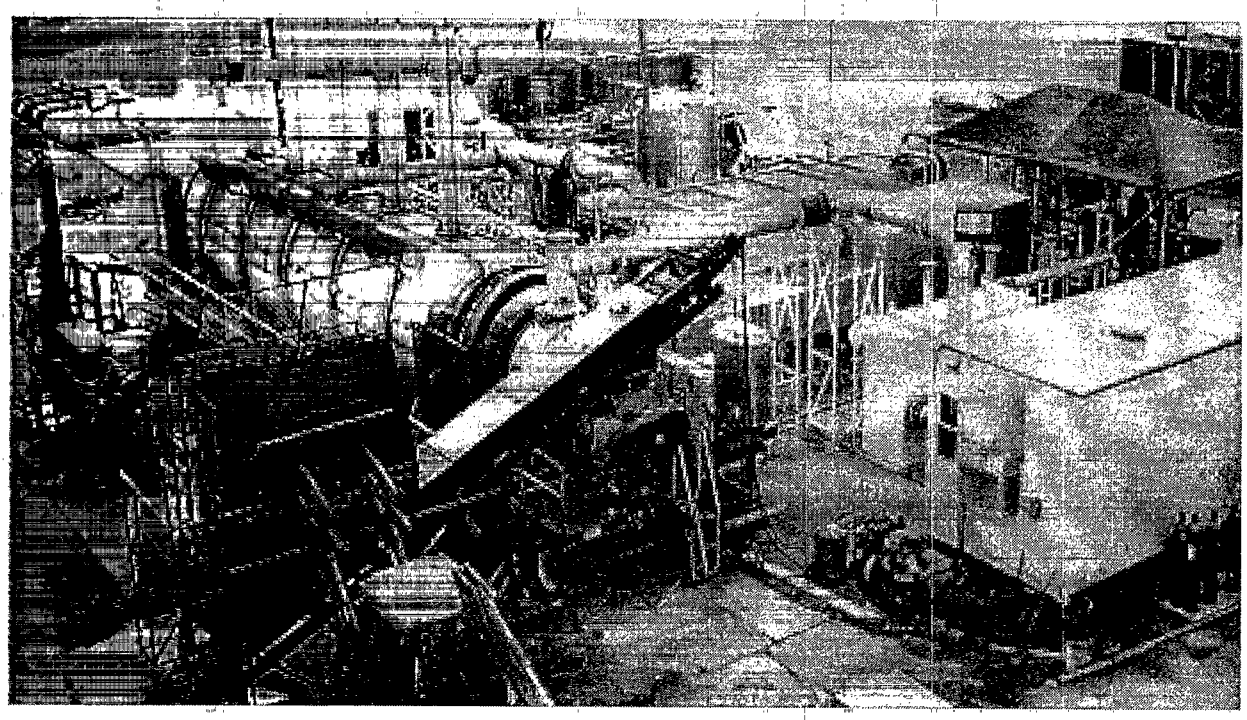

The SITE Program assesses but does not approve or endorse technologies.

leaking. The volume of gas released from this process vent is approximately 700 times less than from an equivalent capacity incinerator.

WASTE APPLICABILITY:

The X*TRAX™ process has been used to treat solids contaminated with the following wastes: polychlorinated biphenyls (PCB); halogenated and nonhalogenated solvents; semivolatile organic compounds, including polynuclear aromatic hydrocarbons, pesticides, and herbicides; fuel oils; benzene, toluene, ethylbenzene, and xylene; and mercury.

STATUS:

This technology was accepted into the SITE Demonstration Program in 1989. The demonstration was conducted in May 1992 at the Re-Solve, Inc., Superfund site in Massachusetts. After the demonstration, the full-scale X*TRAX™ system, Model 200, remediated 50,000 tons of PCB-contaminated soil at the site. The Demonstration Bulletin (EPA/540/MR-93/502), which details results from the demonstration, is available from EPA.

The full-scale system, Model 200, is presently operating at the Sangamo-Weston Superfund site in South Carolina. More than 45,000 tons of PCB-contaminated soil, clay, and sludge have been thermally treated at this site. Feed material with PCB concentrations of more than 8,800 milligrams per kilogram (mg/kg) has been successfully treated to produce (discharge) PCB levels of less than 2 mg/kg. PCB removal efficiency was demonstrated to be greater than 99.97 percent.

Laboratory-, pilot-, and full-scale X*TRAX™ systems are available. Two laboratory-scale, continuous pilot systems are available for treatability studies. More than 108 tests have been completed since January 1988.

DEMONSTRATION RESULTS:

During the SITE demonstration, X*TRAX™ removed PCBs from feed soil and met the site-specific treatment standard of 25 mg/kg for treated soils. PCB concentrations in all treated soil samples were less than 1.0 mg/kg and were reduced from an average of 247 mg/kg in feed soil to an average of 0.13 mg/kg in treated soil. The average PCB removal efficiency was 99.95 percent.

Polychlorinated dibenzo-p-dioxins and polychlorinated dibenzofurans were not formed within the X*TRAX™ system. Organic air emissions from the X*TRAX™ process vent were negligible (less than 1 gram per day). PCBs were not detected in vent gases.

X*TRAX™ removed other organic contaminants from feed soil. Concentrations of tetrachloroethene, total recoverable petroleum hydrocarbons, and oil and grease were reduced to below detectable levels in treated soil. Metals concentrations and soil physical properties were not altered by the X*TRAX™ system.

FOR FURTHER INFORMATION:

EPA PROJECT MANAGER:
Paul dePercin
U.S. EPA
National Risk Management Research Laboratory
26 West Martin Luther King Drive
Cincinnati, OH 45268
513-569-7797
Fax: 513-569-7105
E-Mail: dePercin.Paul@epamail.epa.gov

TECHNOLOGY DEVELOPER CONTACT:
George Hay
OHM Remediation Services Corp.
16406 U.S. Route 224 East
Findlay, OH 45840
419-423-3526
Fax: 419-424-4991

The SITE Program assesses but does not approve or endorse technologies.

RADIAN INTERNATIONAL LLC
(formerly DOW ENVIRONMENTAL, INC.)
(Integrated AquaDetox Steam Vacuum Stripping and Soil Vapor Extraction/Reinjection)

TECHNOLOGY DESCRIPTION:

The integrated AquaDetox Steam Vacuum Stripping and soil vapor extraction/reinjection (SVE) system simultaneously treats groundwater and soil contaminated with volatile organic compounds (VOC). The integrated system consists of (1) an AquaDetox moderate vacuum stripping tower that uses low-pressure steam to treat contaminated groundwater, and (2) an SVE process that treats contaminated soil. The two processes form a closed-loop system that simultaneously remediates contaminated groundwater and soil in situ with virtually no air emissions.

AquaDetox is a high-efficiency, countercurrent stripping technology. A single-stage unit can remove up to 99.99 percent of VOCs in water. The SVE system uses a vacuum to treat VOC-contaminated soil, inducing a flow of air through the soil and removing vapor-phase VOCs with the extracted soil gas. Carbon beds remove the VOCs from the soil gas, which is then reinjected into the ground. The AquaDetox and SVE systems share a granular activated carbon (GAC) unit that decontaminates the combined vapors from both systems (see photograph below). By-products of the system are a free-phase recyclable product and treated water. In addition, mineral regenerable carbon requires disposal after about 3 years.

A key element of the closed-loop system is the vent header unit. This unit collects noncondensable gases from the AquaDetox system for treatment in the GAC units. The AquaDetox system then condenses and treats the steam used to regenerate the GAC units.

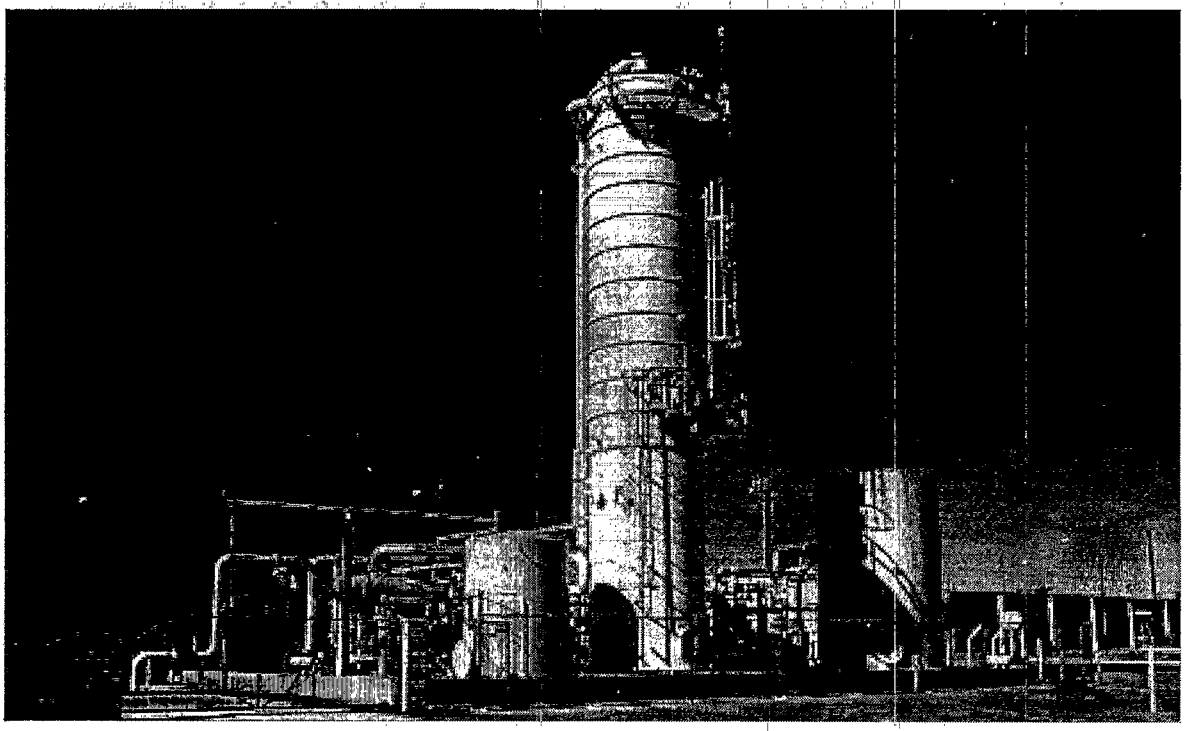

Integrated AquaDetox/SVE System

The SITE Program assesses but does not approve or endorse technologies.

WASTE APPLICABILITY:

This technology removes VOCs, including chlorinated hydrocarbons, in groundwater and soil. Sites with contaminated groundwater and soils containing trichloroethene (TCE), tetrachloroethene (PCE), and other VOCs are suitable for this on-site treatment process.

STATUS:

This technology was accepted into the SITE Demonstration Program in 1990. A SITE demonstration was conducted in September 1991 as part of an ongoing remediation at the San Fernando Valley Groundwater Basin Superfund site in Burbank, California. The Applications Analysis Report (EPA/540/A5-91/002) and Demonstration Bulletin (EPA/540/M5-91/002) are available from EPA.

The AquaDetox/SVE system had been used for over 3 years at the time of the SITE evaluation to treat groundwater and soil gas at the Lockheed Aeronautical Systems Company in Burbank, California. Contaminated groundwater was treated at a rate of up to 1,200 gallons per minute (gpm), while soil gas was removed and treated at a rate of 300 cubic feet per minute. The system occupied about 4,000 square feet. It was operational 95 percent of the time, with 5 percent downtime for scheduled and nonscheduled repairs.

DEMONSTRATION RESULTS:

During the SITE demonstration, the AquaDetox/SVE system achieved the following results:

- The technology treated groundwater and soil gas contaminated with VOCs.
- Efficiencies ranged from 99.92 to 99.99 percent for removal of VOCs from contaminated groundwater. VOC removal efficiencies for soil gas ranged from 98.0 to 99.9 percent when the GAC beds were regenerated according to the specified frequency (8-hour shifts). VOC removal efficiencies dropped to as low as 93.4 percent when the GAC beds were regenerated less frequently.
- The technology produced effluent groundwater that complied with regulatory discharge requirements for TCE and PCE (5 micrograms per liter for each compound).
- The GAC beds removed VOCs from contaminated soil gas even after 24 hours of continuous operation without steam regeneration.
- The system's steam consumption dropped with decreasing tower pressures. During the demonstration, the system was more efficient at lower operating tower pressures.
- The 500-, 1,000-, and 3,000-gpm systems are estimated to cost about $3.2, $4.3, and $5.8 million, respectively. The total annual operation and maintenance costs are about $410,000, $630,000 and $1,500,000 for the 500-, 1,000-, and 3,000-gpm systems, respectively.

FOR FURTHER INFORMATION:

EPA PROJECT MANAGER:
Gordon Evans
U.S. EPA
National Risk Management Research Laboratory
26 West Martin Luther King Drive
Cincinnati, OH 45268
513-569-7684
Fax: 513-569-7787

TECHNOLOGY DEVELOPER CONTACT:
Ken Solcher
Radian International LLC
1990 North California Boulevard, Suite 500
Walnut Creek, CA 94596
713-914-6607

The SITE Program assesses but does not approve or endorse technologies.

REMEDIATION TECHNOLOGIES, INC.
(Liquid and Solids Biological Treatment)

TECHNOLOGY DESCRIPTION:

Liquid and solids biological treatment (LST) is a process that remediates soils and sludges contaminated with biodegradable organics (see figure below). The process is similar to activated sludge treatment of municipal and industrial wastewaters, but it treats suspended solids concentrations greater than 20 percent. First, an aqueous slurry of the waste material is prepared, and environmental conditions such as nutrient concentrations, temperature, and pH are optimized for biodegradation. The slurry is then mixed and aerated for a sufficient time to degrade the target waste constituents.

Several physical process configurations are possible, depending on site- and waste-specific conditions. Waste can be treated continuously or in batches in impoundment-based reactors. This configuration is sometimes the only practical option for projects greater than 10,000 cubic yards. Alternatively, tank-based systems may be constructed.Constituent losses due to volatilization must be controlled during LST operations. The potential for emissions is greatest in batch treatment systems and lowest in continuously stirred tank reactor systems, particularly those with long residence times. Technologies such as carbon adsorption and biofiltration can control emissions.

LST may require pre- and posttreatment operations. However, in situ applications that store treated sludge residues do not require multiple unit operations.

Overall bioremediation in a hybrid system consisting of LST and land treatment systems can provide an alternative to landfilling treated solids. This combination rapidly degrades volatile constituents in a contained system, rendering the waste suitable for landfilling.

Remediation Technologies, Inc. (ReTeC), has constructed a mobile LST pilot system for field demonstrations. The system consists of two reactors, two 2,000-gallon holding tanks, and

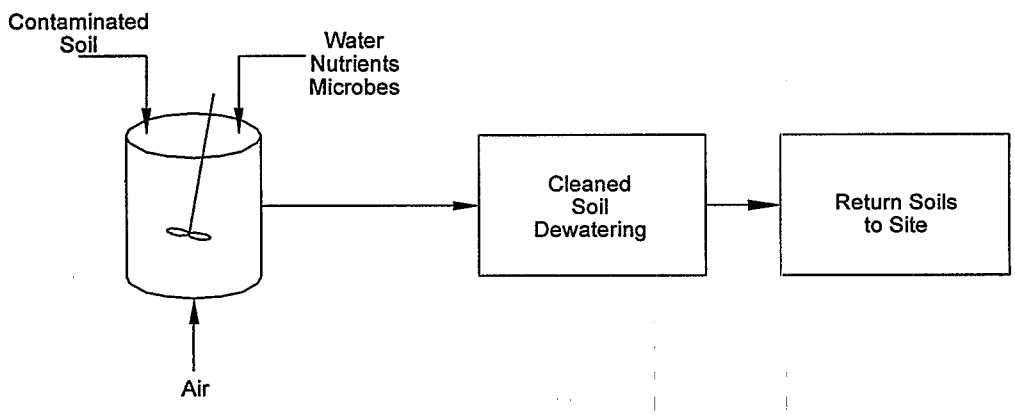

Liquid and Solids Biological Treatment

The SITE Program assesses but does not approve or endorse technologies.

associated process equipment. The reactors are aerated using coarse bubble diffusers and mixed using axial flow turbine mixers. The reactors can operate separately, or as batch or continuous systems. Oxygen and pH are continuously monitored and recorded. Additional features include antifoaming and temperature control systems.

WASTE APPLICABILITY:

The technology treats sludges, sediments, and soils containing biodegradable organic materials. To date, the process has mainly treated sludges containing petroleum and wood preservative organics such as creosote and pentachlorophenol (PCP). LST has treated polynuclear aromatic hydrocarbons (PAH), PCP, and a broad range of petroleum hydrocarbons in the laboratory and the field.

STATUS:

This technology was accepted into the SITE Demonstration Program in 1987. The technology was demonstrated under SITE at the Niagara Mohawk Power Corporation facility at Harbor Point in Utica, New York from June through August 1995. The following equipment was used for the demonstration: (1) a 10,000-gallon cylindrical tank (12-foot diameter) with bottom-mounted air diffusers that provided aeration and assisted in suspending solids; (2) a tank cover outfitted with exhaust piping that contained and channeled air discharge; and (3) a spray system that recircultated liquid from within the tank to disperse foam buildup.

ReTeC has applied the technology in the field over a dozen times to treat wood preservative sludges with impoundment-type LST systems. In addition, LST has treated petroleum refinery impoundment sludges in two field-based pilot demonstrations and several laboratory treatability studies.

DEMONSTRATION RESULTS:

Analytical results from the SITE demonstration showed a reduction in oil and grease concentrations from 14,500 to 3,100 milligrams per kilogram (mg/kg), or 79 percent; total PAH concentrations were reduced from 137 to 51 mg/kg, or 63 percent; and total benzene, toluene, ethylbenzene, and xylene concentrations were reduced from 0.083 to 0.030 mg/kg, or 64 percent. PAH leachability in the solids was reduced to nondetect levels after treatment. Toxicity of the solids to earthworms was also decreased by the treatment. Only 24 percent of the earthworms survived when added to untreated contaminated soil, while earthworms placed in treated soil showed no toxic effects.

FOR FURTHER INFORMATION:

EPA PROJECT MANAGER:
Ronald Lewis
U.S. EPA
National Risk Management Research Laboratory
26 West Martin Luther King Drive
Cincinnati, OH 45268
513-569-7856
Fax: 513-569-7105

TECHNOLOGY DEVELOPER CONTACT:
Merv Cooper
Remediation Technologies, Inc.
1011 S.W. Klickitat Way, Suite 207
Seattle, WA 98134
206-624-9349
Fax: 206-624-2839

The SITE Program assesses but does not approve or endorse technologies.

ROCHEM SEPARATION SYSTEMS, INC.
(Rochem Disc Tube™ Module System)

TECHNOLOGY DESCRIPTION:

The Rochem Disc Tube™ Module System uses membrane separation to treat aqueous solutions ranging from seawater to leachate contaminated with organic solvents. The system uses osmosis through a semipermeable membrane to separate pure water from contaminated liquids.

Osmotic theory implies that a saline solution may be separated from pure water by a semipermeable membrane. The higher osmotic pressure of the salt solution causes the water (and other compounds having high diffusion rates through the selected membrane) to diffuse through the membrane into the salt water. Water will continue to permeate the salt solution until the osmotic pressure of the salt solution equals the osmotic pressure of the pure water. At this point, the salt concentrations of the two solutions are equal, eliminating any additional driving force for mass transfer across the membrane. However, if external pressure is exerted on the salt solution, water will flow in the reverse direction from the salt solution into the pure water.

This phenomenon, known as reverse osmosis (RO), can separate pure water from contaminated matrices. RO can treat hazardous wastes by concentrating the hazardous chemical constituents in an aqueous brine, while recovering pure water on the other side of the membrane.

Fluid dynamics and system construction result in an open-channel, fully turbulent feed and water-flow system. This configuration prevents accumulation of suspended solids on the separation membranes, ensuring high efficiency filtration for water and contaminants. Also, the design of the disc tubes allows easy cleaning of the filtration medium, providing a long service life for the membranes.

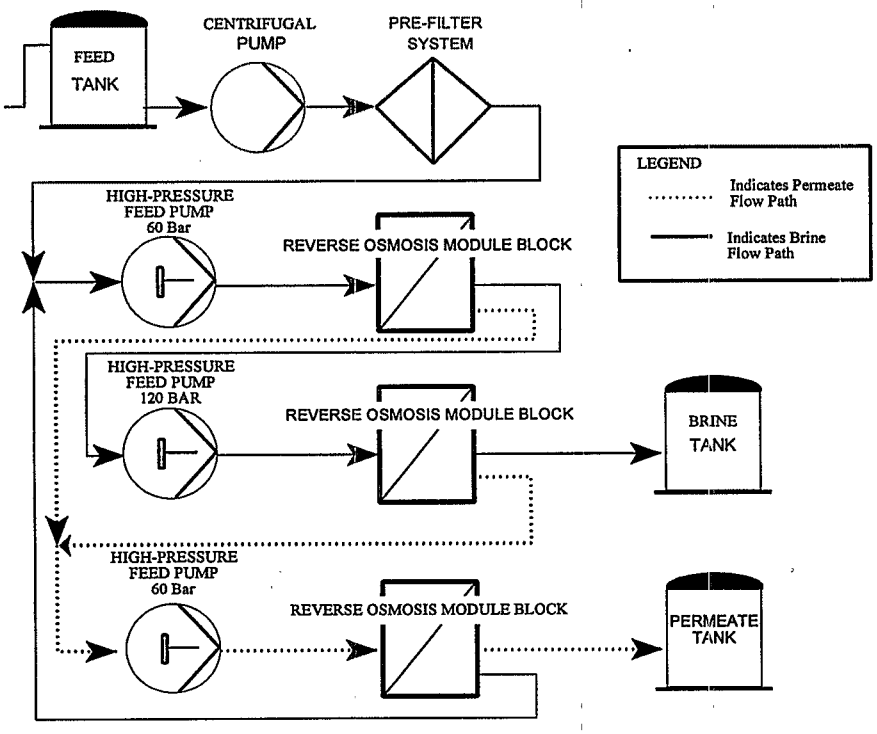

Three-Stage, Reverse Osmosis Flow Path

The SITE Program assesses but does not approve or endorse technologies.

A general flow path for the Rochem Disc Tube™ Module System as applied at the SITE demonstration is shown on the previous page. Waste feed, process permeate, and rinse water are potential feed materials to the RO modules. The modules are skid-mounted and consist of a tank and a high-pressure feed system. The high-pressure feed system consists of a centrifugal feed pump, a prefilter cartridge housing, and a triplex plunger pump to feed the RO modules. The processing units are self-contained and require electrical and interconnection process piping before operation.

WASTE APPLICABILITY:

Many types of waste material can be treated with this system, including sanitary and hazardous landfill leachate containing both organic and inorganic chemical species.

STATUS:

This technology was accepted into the SITE Demonstration Program in July 1991. The demonstration was conducted in August 1994 at the Central Landfill Superfund site in Johnston, Rhode Island. The system was used to treat landfill leachate from a hazardous waste landfill. During the demonstration, approximately 4 gallons per minute of contaminated waste was processed over a 3-week period. All feed and residual effluent streams were sampled to evaluate the performance of this technology. The Innovative Technology Evaluation Report (EPA/540/R-96/507), the Technology Capsule (EPA/540/R-96/507a), and the Demonstration Bulletin (EPA/540/MR-96/507) are available from EPA.

DEMONSTRATION RESULTS:

Preliminary results from the demonstration suggest the following:

- Over 99 percent of total dissolved solids, over 96 percent of total organic carbon, and 99 percent of all target metals were removed. In addition, the average percent rejection for volatile organic compounds was greater than the test criteria of 90 percent.
- The average water recovery rate for the Rochem Disc Tube™ Module System during the demonstration was approximately 75 percent. The test criterion was 75 percent treated water recovery rate.
- The Rochem Disc Tube™ Module System operated for 19 days at up to 8 hours per day. Daily operation hours were not as long as planned due to weather and field operational difficulties. However, the system operated long enough to evaluate the technology's performance.

FOR FURTHER INFORMATION:

EPA PROJECT MANAGER:
Douglas Grosse
U.S. EPA
National Risk Management Research Laboratory
26 West Martin Luther King Drive
Cincinnati, OH 45268
513-569-7844
Fax: 513-569-7585

TECHNOLOGY DEVELOPER CONTACT:
David LaMonica
Pall Rochem
3904 Del Amo Boulevard, Suite 801
Torrance, CA 90503
310-370-3160
Fax: 310-370-4988

The SITE Program assesses but does not approve or endorse technologies.

SBP TECHNOLOGIES, INC.
(Membrane Filtration and Bioremediation)

TECHNOLOGY DESCRIPTION:

SBP Technologies, Inc. (SBP), has developed a hazardous waste treatment system consisting of (1) a membrane filtration system that extracts and concentrates contaminants from groundwater, surface water, wash water, or slurries; and (2) a bioremediation system that treats concentrated groundwater, wash water, and soil slurries (see photograph below). These two systems treat a wide range of waste materials separately or as parts of an integrated waste handling system.

The membrane filtration system removes and concentrates contaminants by pumping contaminated liquids through porous stainless steel tubes coated with specifically formulated membranes. Contaminants are collected inside the tube membrane, while "clean" water permeates the membrane and tubes. Depending on local requirements and regulations, the clean permeate can be discharged to the sanitary sewer for further treatment at a publicly owned treatment works (POTW). The concentrated contaminants are collected in a holding tank and fed to the bioremediation system.

Contaminated water or slurry can also flow directly into the bioremediation system and be polished in the membrane filtration system. The bioremediation system consists of one or more bioreactors that are inoculated with specially selected, usually indigenous microorganisms to produce effluent with low to nondetectable contaminant levels. Integrating the two systems allows removal and destruction of many contaminants.

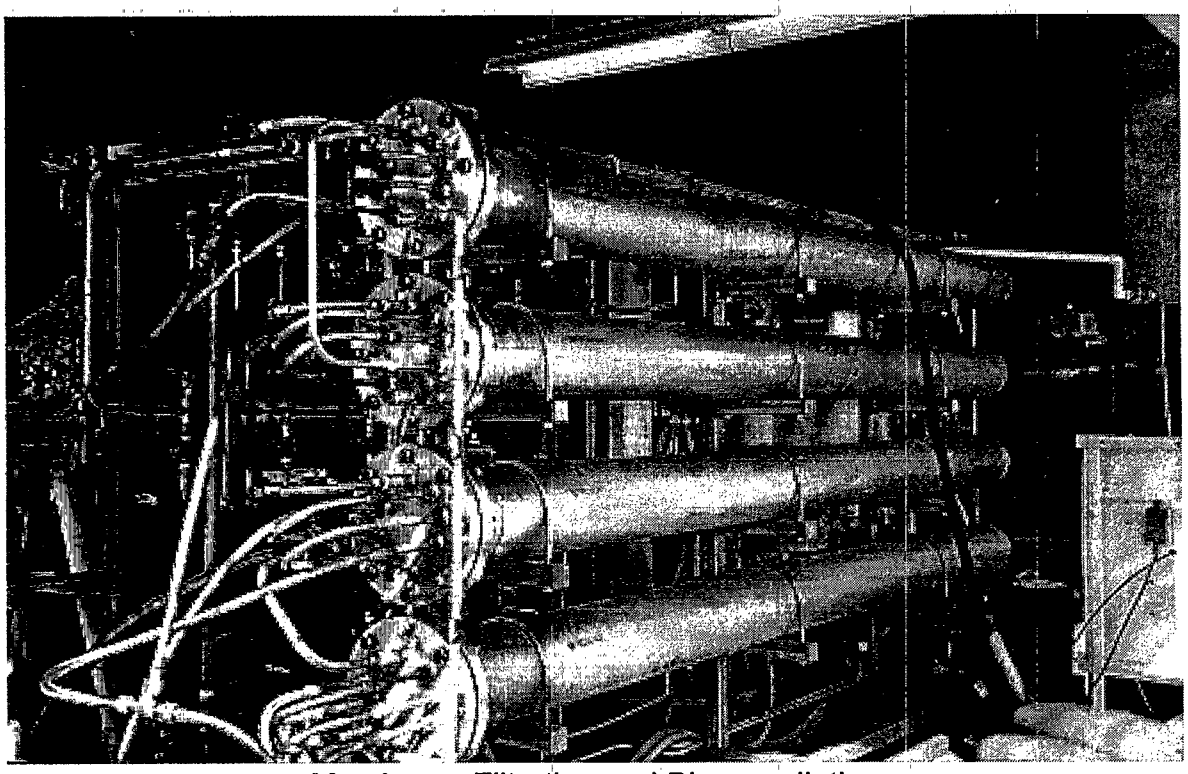

Membrane Filtration and Bioremediation

The SITE Program assesses but does not approve or endorse technologies.

WASTE APPLICABILITY:

The membrane filtration system concentrates contaminants and reduces the volume of contaminated materials from a number of waste streams, including contaminated groundwater, surface water, storm water, landfill leachates, and industrial process wastewater.

The bioremediation system can treat a wide range of organic contamination, especially wood-preserving wastes and solvents. A modified version can also treat polynuclear aromatic hydrocarbons (PAH) such as creosote and coal tar; pentachlorophenol; petroleum hydrocarbons; and chlorinated aliphatics, such as trichloroethene.

The two technologies can be used separately or combined, depending on site characteristics and waste treatment needs. For example, for waste-waters or slurries contaminated with inorganics or materials not easily bioremediated, the membrane filtration system can separate the material for treatment by another process. Both the membrane filtration system and the bioremediation system can be used as part of a soil cleaning system to handle residuals and contaminated liquids.

STATUS:

The membrane filtration system, accepted into the SITE Program in 1990, was demonstrated in October 1991 at the American Creosote Works in Pensacola, Florida. The Demonstration Bulletin (EPA/540/MR-92/014) and Applications Analysis Report (EPA/540/AR-92/014) are available from EPA. A full-scale SITE Program demonstration of the bioremediation system was canceledHowever, a smaller-scale field study was conducted at the site; results are available through the developer.SBP is marketing its bioremediation and membrane filtration systems to industrial and governmental clients for on-site treatment of contaminated soil, sludge, and water.

DEMONSTRATION RESULTS:

Results from the SITE demonstration are summarized as follows:

- The system effectively concentrated the PAHs into a smaller volume.
- The process removed 95 percent of the PAHs found in creosote from the feed and produced a permeate stream that was acceptable for discharge to a POTW.
- The membrane removed 25 to 35 percent of smaller phenolic compounds.
- The system removed an average of about 80 percent of the total concentrations of creosote constituents (phenolics and PAHs) in the feedwater and permeate.

FOR FURTHER INFORMATION:

EPA PROJECT MANAGER:
John Martin
U.S. EPA
National Risk Management Research Laboratory
26 West Martin Luther King Drive
Cincinnati, OH 45268
513-569-7758
Fax: 513-569-7620

The SITE Program assesses but does not approve or endorse technologies.

J.R. SIMPLOT COMPANY
(The SABRE™ Process)

TECHNOLOGY DESCRIPTION:

The patented Simplot Anaerobic Biological Remediation (SABRE™) process reduces contamination through on-site bioremediation of soils contaminated with the herbicide dinoseb (2-*sec*-butyl-4,6-dinitrophenol) or nitroaromatic explosives. The biodegradation process begins when contaminated soil is placed in a bioreactor and flooded with buffered water. A source of carbon and a nitroaromatic-degrading consortium of anaerobic bacteria are then added to the bioreactor. Anaerobic conditions are quickly established, allowing the bacteria to degrade the target compounds while preventing polymerization of intermediate breakdown products. A photograph of the technology in operation is shown below.

Soil can be treated in above- or in-ground containment ponds. Temperature, pH, and redox potential in the bioreactor are monitored during treatment. A hydromixing system has been engineered to efficiently solubilize the target compound from the soil while maintaining anaerobic conditions. Frequency of mixing depends upon the contaminants present, concentration, soil heterogeneity, and soil type.

WASTE APPLICABILITY:

This technology is designed to treat soils contaminated with nitroaromatic pesticides and explosives. This contamination most often occurs at rural crop dusting aircraft sites and at ordnance handling and manufacturing facilities.

STATUS:

This technology was accepted into the SITE Emerging Technology Program in January 1990. Based on bench- and pilot-scale results from the Emerging Technology Program, this technology was accepted in the SITE Demonstration Program

Bioreactors and Soil Mixing System at a TNT-Contaminated Site in Washington

The SITE Program assesses but does not approve or endorse technologies.

in winter 1992. Demonstrations for dinoseb and the explosive TNT (2,4,6-trinitrotoluene) were performed at Bowers Field in Ellensberg, Washington and at Weldon Spring Ordnance Works in Weldon Spring, Missouri, respectively. A Technology Capsule describing the dinoseb project (EPA/540/R-94/508a) and an Innovative Technology Evaluation Report describing the TNT project (EPA/540/R-95/529) are available from EPA.

Since then, the process has been evaluated at several other sites. During the winters of 1994 and 1995, two 10-cubic-yard (yd^3) batches of soils from Bangor Naval Submarine Base, Washington were treated using the SABRE™ Process. One batch contained TNT, while the other was contaminated with TNT and RDX. Cost savings were realized by using in-ground ponds for bioreactors and efficient mixing. Heaters were also installed to maintain optimum biological activity during the sub-freezing temperatures. Treatment goals were met or surpassed in the 90 days allowed for the project.

A full-scale remediation of 321 yd^3 of dinoseb-contaminated soils was completed in October 1995. The site was a former herbicide distributor located near Reedley, California. The treatment was performed in an aboveground containment already existing on site. Concentrations ranging from 40 to 100 milligrams per kilogram were reduced to nondetect after 28 days of treatment. The soil was mixed three times during treatment using a full-scale, expandable hydromixing system.

A larger evaluation was conducted in fall 1996 at Naval Weapons Station - Yorktown. About 500 yd^3 of soil were contained in an in-ground pond measuring 86 feet by 150 feet deep. A full-scale hydromixing system was used to periodically slurry the soil and water mixture.

Process optimization work is ongoing. Collaborative projects with the U.S. Army Corps of Engineers Waterways Experiment Station and the U.S. Army Environmental Center are underway.

DEMONSTRATION RESULTS:

During the Weldon Spring demonstration, TNT was reduced from average concentrations of 1,500 parts per million (ppm) to an average of 8.7 ppm, for an average removal rate of 99.4 percent. Toxicity testing, which included early seedling growth, root elongation, and earthworm reproduction tests, showed that soil toxicity was significantly reduced. The Weldon Spring demonstration showed the effectiveness of this process even in unfavorable conditions. The treatment time was lengthened by unseasonably cool ambient temperatures. Temperatures in the bioreactor were as low as 4 °C; ideal temperatures for the SABRE™ process are 35 to 37 °C.

During the Ellensburg demonstration, dinoseb was reduced from 27.3 ppm to below the detection limit, a greater than 99.8 percent removal. Other pesticides were also degraded in this process, highlighting the effectiveness of the process even in the presence of co-contaminants. The process was completed in just 23 days, despite 18 °C temperatures.

FOR FURTHER INFORMATION:

EPA PROJECT MANAGER:
Wendy Davis-Hoover
U.S. EPA
National Risk Management Research Laboratory
26 West Martin Luther King Drive
Cincinnati, OH 45268
513-569-7206
Fax: 513-569-7879

TECHNOLOGY DEVELOPER CONTACTS:
Tom Yergovich
J.R. Simplot Company
P.O. Box 198
Lanthrop, CA 95330
209-858-2511 ext. 6409
Fax: 209-858-2519

The SITE Program assesses but does not approve or endorse technologies.

SMITH ENVIRONMENTAL TECHNOLOGIES CORPORATION
(formerly CANONIE ENVIRONMENTAL SERVICES CORPORATION)
(Low Temperature Thermal Aeration [LTTA®])

TECHNOLOGY DESCRIPTION:

The Low Temperature Thermal Aeration (LTTA®) technology is a low-temperature desorption process (see figure below). The technology removes organic contaminants from contaminated soils into a contained air stream, which is extensively treated to collect or thermally destroy the contaminants.

A direct-fired rotary dryer heats an air stream which, by direct contact, desorbs water and organic contaminants from the soil. Soil can be heated to up to 800 °F. The processed soil is quenched to reduce temperatures and mitigate dust problems. The processed soil is then discharged into a stockpile. The hot air stream that contains vaporized water and organics is treated by one of two air pollution control systems. One system removes the organic contaminants from the air stream by adsorption on granular activated carbon (GAC) and includes the following units in series: (1) cyclones and baghouse for particulate removal; (2) wet scrubber for acid gas and some organic vapor removal; and (3) GAC adsorption beds for organic removal.

The second air pollution control system can treat soils containing high concentrations of petroleum hydrocarbons. The system includes the following units in series: (1) cyclones for particle removal; (2) thermal oxidizer-afterburner for destruction of organics; (3) quench tower for cooling of air stream; (4) baghouse for additional particle removal; and (5) wet scrubber for acid gas removal.

The LTTA® technology generates no wastewater or waste soils. Cyclone fines and baghouse dust are combined with treated soil and quenched with treated scrubber water. The treated soil, once verified to meet the treatment criteria, is backfilled on site without restrictions. GAC beds used for air pollution control are regenerated or incinerated when spent.

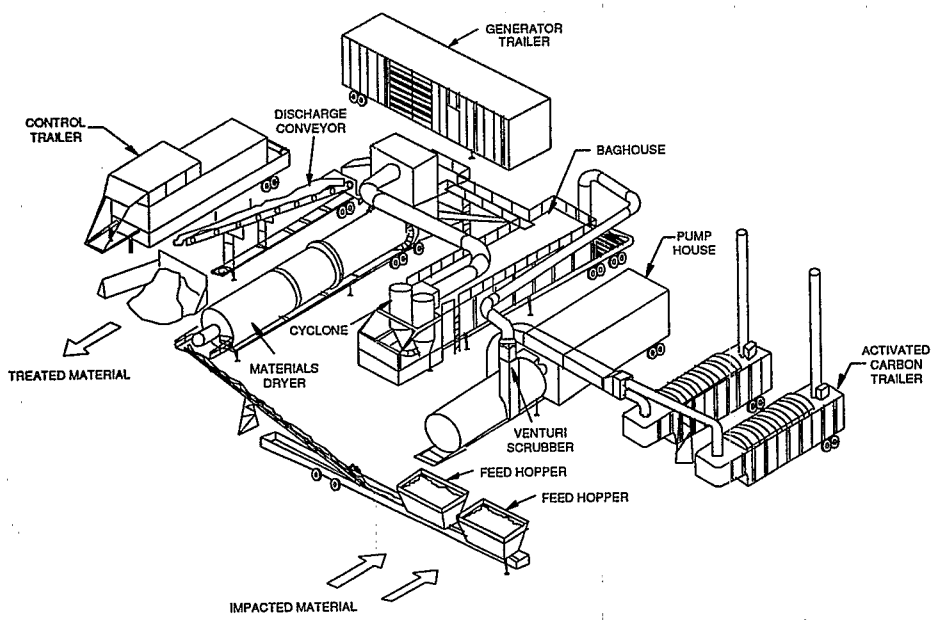

Low Temperature Thermal Aeration (LTTA®) Technology

The SITE Program assesses but does not approve or endorse technologies.

WASTE APPLICABILITY:

LTTA® can remove volatile organic compounds (VOC), semivolatile organic compounds (SVOC), organochlorine pesticides (OCP), organophosphorus pesticides (OPP), and total petroleum hydrocarbons (TPH) from soils, sediments, and some sludges. LTTA® has been used at full scale to remove VOCs such as benzene, toluene, tetrachloroethene, trichloroethene, and dichloroethene; SVOCs such as acenaphthene, chrysene, naphthalene, and pyrene; OCPs such as DDT, DDT metabolites, and toxaphene; OPPs such as ethyl parathion, methyl parathion, merphos, and mevinphos; and TPHs.

STATUS:

The LTTA® technology was accepted into the SITE Demonstration Program in summer 1992. LTTA® was demonstrated in September 1992 on soils contaminated with OCPs during a full-scale remediation at a pesticide site in Arizona. The Demonstration Bulletin (EPA/540/MR-93/504) and Applications Analysis Report (EPA/540/AR-93/504) are available from EPA.

The full-scale LTTA® system has remediated contaminated soils at six sites, including three Superfund sites. The system has treated more than 117,000 tons of soil.

DEMONSTRATION RESULTS:

Key findings from the demonstration are summarized below:

- The LTTA® system achieved the specified cleanup criteria for the site, a sliding scale correlating the concentrations of DDT family compounds (DDT, DDE, and DDD) with concentrations of toxaphene. The maximum allowable pesticide concentrations in the treated soil were 3.52 milligrams per kilogram (mg/kg) of DDT family compounds and 1.09 mg/kg of toxaphene.
- Residual levels of all the pesticides in the treated soil were generally below or close to the laboratory detection limit, with the exception of 4,4'-DDE, which was found at residual concentrations of 0.1 to 1.5 mg/kg. Removal efficiencies for pesticides found in the feed soil at quantifiable concentrations are summarized below:

Compound	Efficiency
4,4'-DDD	>99.97%
4,4'-DDE	90.26%
4,4'-DDT	99.97%
Endrin	>99.85%
Toxaphene	>99.83%

- The LTTA® process did not generate dioxins or furans as products of incomplete combustion or thermal transformation.

FOR FURTHER INFORMATION:

EPA PROJECT MANAGER:
Paul dePercin
U.S. EPA
National Risk Management Research Laboratory
26 West Martin Luther King Drive
Cincinnati, OH 45268
513-569-7797
Fax: 513-569-7105
E-Mail: dePercin.Paul@epamail.epa.gov

TECHNOLOGY DEVELOPER CONTACT:
Joseph Hutton
Smith Environmental Technologies Corporation
304 Inverness Way South, Suite 200
Englewood, CO 80112

The SITE Program assesses but does not approve or endorse technologies.

SOILTECH ATP SYSTEMS, INC.
(Anaerobic Thermal Processor)

TECHNOLOGY DESCRIPTION:

The SoilTech ATP Systems, Inc. (SoilTech), anaerobic thermal processor (ATP) uses a rotary kiln to desorb, collect, and recondense contaminants or recyclable hydrocarbons from a wide variety of feed material (see figure below).

The proprietary kiln contains four separate internal thermal zones: preheat, retort, combustion, and cooling. In the preheat zone, water and volatile organic compounds (VOC) are vaporized. The hot solids and heavy hydrocarbons then pass through a proprietary sand seal to the retort zone. The sand seal allows solids to pass and inhibits gas and contaminant movement from one zone to the other. Concurrently, hot treated soil from the combustion zone enters the retort zone through a second sand seal. This hot treated soil provides the thermal energy necessary to desorb the heavy organic contaminants. The vaporized contaminants are removed under slight vacuum to the gas handling system. After cyclones remove dust from the gases, the gases are cooled, and condensed oil and water are separated into their various fractions.

The coked soil passes through a third sand seal from the retort zone to the combustion zone. Some of the hot treated soil is recycled to the retort zone through the second sand seal as previously described. The remainder of the soil enters the cooling zone. As the hot combusted soil enters the cooling zone, it is cooled in the annular space between the outside of the preheat zone and the kiln shell. Here, the heat from the combusted soils is transferred indirectly to the soils in the preheat zone. The cooled, treated soil exiting the cooling zone is quenched with water and conveyed to a storage pile.

Flue gases from the combustion zone pass through the cooling zone to an emission control system. The system consists of a cyclone and baghouse to remove particulates, a wet scrubber to remove acid gases, and a carbon adsorption bed to remove trace organic compounds.

WASTE APPLICABILITY:

The system treats soils, sediments, and sludges contaminated with compounds that vaporize at temperatures up to 1,100 °F. Treated solids are free of organics and suited for backfill on site. Applicable contaminants include the following:

- Petroleum hydrocarbons: fuel, oil, lube oil, semivolatile organic compounds (SVOC), VOCs
- Halogenated hydrocarbons: polychlorinated biphenyls (PCB), dioxins, furans, pesticides, herbicides

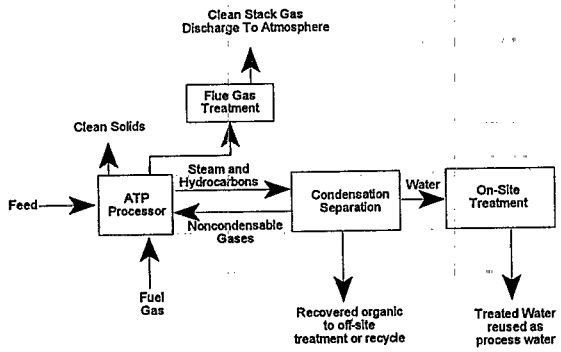

Anaerobic Thermal Processor (ATP)

The SITE Program assesses but does not approve or endorse technologies.

- Aromatic hydrocarbons: coal tar residuespolynuclear aromatic hydrocarbons (PAH)
- Volatile metals: mercury

STATUS:

This technology was accepted into the SITE Demonstration Program in 1991. The ATP has been demonstrated at two sites. At the first demonstration, in May 1991, a full-scale unit dechlorinated PCB-contaminated soil at the Wide Beach Development Superfund site in Brant, New York. At the second demonstration, completed in June 1992, a full-scale unit remediated soils and sediments at the Waukegan Harbor Superfund site in Waukegan, Illinois. Two additional Superfund sites in Ohio and Kentucky have since been remediated by the ATP. Soils at these sites were contaminated with PCBs, PAHs, and pesticides.

The ATP has been used to treat more than 100,000 tons of waste on four separate sites. The system has operated in compliance with state and federal regulations in New York, Illinois, Ohio, and Kentucky. SoilTech is currently negotiating with a confidential client to remediate 25,000 cubic yards of trichloroethene- (TCE) and PCB-contaminated soil at a site located in Pennsylvania.

SoilTech is continuing its research into more diverse organic remediation applications and bitumen recovery.

DEMONSTRATION RESULTS:

Test results from both SITE demonstrations indicate the following:

- The SoilTech ATP removed over 99 percent of the PCBs in the contaminated soil, resulting in PCB levels below 0.1 part per million (ppm) at the Wide Beach Development site and averaging 2 ppm at the Waukegan Harbor site.
- Dioxin and furan stack gas emissions were below the site-specific standards.
- PCB stack gas emissions were equivalent to 99.99 percent destruction and removal efficiency at the Waukegan Harbor site.
- No volatile or semivolatile organic degradation products were detected in the treated soil. Also, no leachable metals, VOCs, or SVOCs were detected in the treated soil.
- For the Wide Beach Development and Waukegan Harbor remediation projects, soil treatment costs were approximately $265 and $155 per ton, respectively. The regulatory support, mobilization, startup, and demobilization costs totaled about $1,400,000 for each site.

FOR FURTHER INFORMATION:

EPA PROJECT MANAGER:
Paul dePercin
U.S. EPA
National Risk Management Research Laboratory
26 West Martin Luther King Drive
Cincinnati, OH 45268
513-569-7797
Fax: 513-569-7105
E-Mail: dePercin.Paul@epamail.epa.gov

TECHNOLOGY DEVELOPER CONTACTS:
Joseph Hutton
Smith Environmental Technologies Corporation
304 Inverness Way South, Suite 200
Englewood, CO 80112

The SITE Program assesses but does not approve or endorse technologies.

SOLIDITECH, INC.
(Solidification and Stabilization)

TECHNOLOGY DESCRIPTION:

This solidification and stabilization process immobilizes contaminants in soils and sludges by binding them in a concrete-like, leach-resistant matrix. Contaminated waste materials are collected, screened to remove oversized material, and introduced to the batch mixer (see figure below). The waste material is then mixed with water; Urrichem, a proprietary chemical reagent; proprietary additives; and pozzolanic material (fly ash), kiln dust, or cement. After it is thoroughly mixed, the treated waste is discharged from the mixer. Treated waste is a solidified mass with significant unconfined compressive strength (UCS), high stability, and a rigid texture similar to that of concrete.

WASTE APPLICABILITY:

This process treats soils and sludges contaminated with organic compounds, metals, inorganic compounds, and oil and grease. Batch mixers of various capacities can treat different volumes of waste.

STATUS:

This technology was accepted into the SITE Demonstration Program in 1988. The solidification and stabilization process was demonstrated in December 1988 at the Imperial Oil Company/Champion Chemical Company Superfund site in Morganville, New Jersey. This site formerly contained both chemical processing

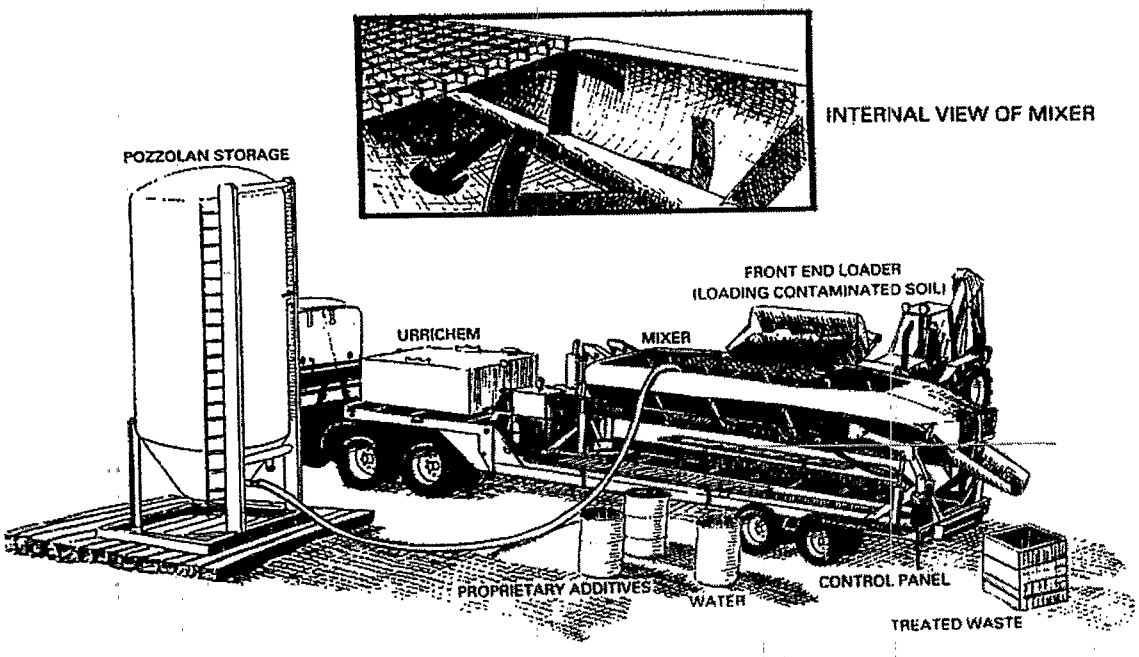

Soliditech Processing Equipment

The SITE Program assesses but does not approve or endorse technologies.

and oil reclamation facilities. Soils, filter cakes, and oily wastes from an old storage tank were treated during the demonstration. These wastes were contaminated with petroleum hydrocarbons, polychlorinated biphenyls (PCB), other organic chemicals, and heavy metals. The Technology Evaluation Report (EPA/540/5-89/005a), Applications Analysis Report (EPA/540/A5-89/005), and Demonstration Bulletin (EPA/540/M5-89/005) are available from EPA. This technology is no longer available through a vendor. Contact the EPA Project Manager for further information.

DEMONSTRATION RESULTS:

Key findings from the Soliditech demonstration are summarized below:

- Extract and leachate analyses showed that heavy metals in the untreated waste were immobilized.
- The process solidified both solid and liquid wastes with high organic content (up to 17 percent), as well as oil and grease.
- Volatile organic compounds in the original waste were not detected in the treated waste.
- Physical test results of the solidified waste showed (1) UCS ranging from 390 to 860 pounds per square inch (psi); (2) very little weight loss after 12 cycles of wet and dry and freeze and thaw durability tests; (3) low permeability of the treated waste; and (4) increased density after treatment.
- The solidified waste increased in volume by an average of 22 percent. Because of solidification, the bulk density of the waste material increased by about 35 percent.
- Semivolatile organic compounds (phenols) were detected in the treated waste and the toxicity characteristic leaching procedure (TCLP) extracts from the treated waste, but not in the untreated waste or its TCLP extracts. The presence of these compounds is believed to result from chemical reactions in the waste treatment mixture.
- The oil and grease content of the untreated waste ranged from 2.8 to 17.3 percent (28,000 to 173,000 parts per million [ppm]). The oil and grease content of the TCLP extracts from the solidified waste ranged from 2.4 to 12 ppm.
- The pH of the solidified waste ranged from 11.7 to 12.0. The pH of the untreated waste ranged from 3.4 to 7.9.
- PCBs were not detected in any extracts or leachates from the treated waste.
- Visual observation of solidified waste revealed bulk oily material about 1 millimeter in diameter.

FOR FURTHER INFORMATION:

EPA PROJECT MANAGER:
Jack Hubbard
U.S. EPA
National Risk Management Research Laboratory
26 West Martin Luther King Drive
Cincinnati, OH 45268
513-569-7507
Fax: 513-569-7620

The SITE Program assesses but does not approve or endorse technologies.

SONOTECH, INC.
(Frequency-Tunable Pulse Combustion System)

TECHNOLOGY DESCRIPTION:

The Sonotech, Inc., frequency-tunable pulse combustion system (Sonotech system) is designed to significantly improve batch- and continuous-mode combustion or thermal processes (such as incineration) by creating large-amplitude, resonant pulsations inside the combustion chamber. This technology can be applied to new or existing combustion systems. The technology is used in fossil fuel combustion devices, residential natural gas furnaces, and industrial combustion systems. It should prove similarly beneficial to hazardous waste incineration and soil remediation applications.

The Sonotech system (see photograph below) consists of an air inlet, a combustor section, a tailpipe, a control panel, and safety features. This system is designed to improve an incinerator's performance by (1) increasing mixing rates between the fuel and air, (2) increasing mixing rates between reactive gas pockets and ignition sources, and (3) increasing rates of heat and mass transfer between the gas and the burning waste. These improvements should (1) reduce the amount of excess air required to completely burn the waste, (2) increase destruction and removal efficiencies (DRE) of principal organic hazardous constituents, (3) minimize the formation of products of incomplete combustion, and (4) eliminate or minimize detrimental emissions or "puffs."

The Sonotech system has achieved sound amplitudes as high as 170 decibels and frequencies of 100 to 500 hertz within the combustion chamber. The high frequencies and

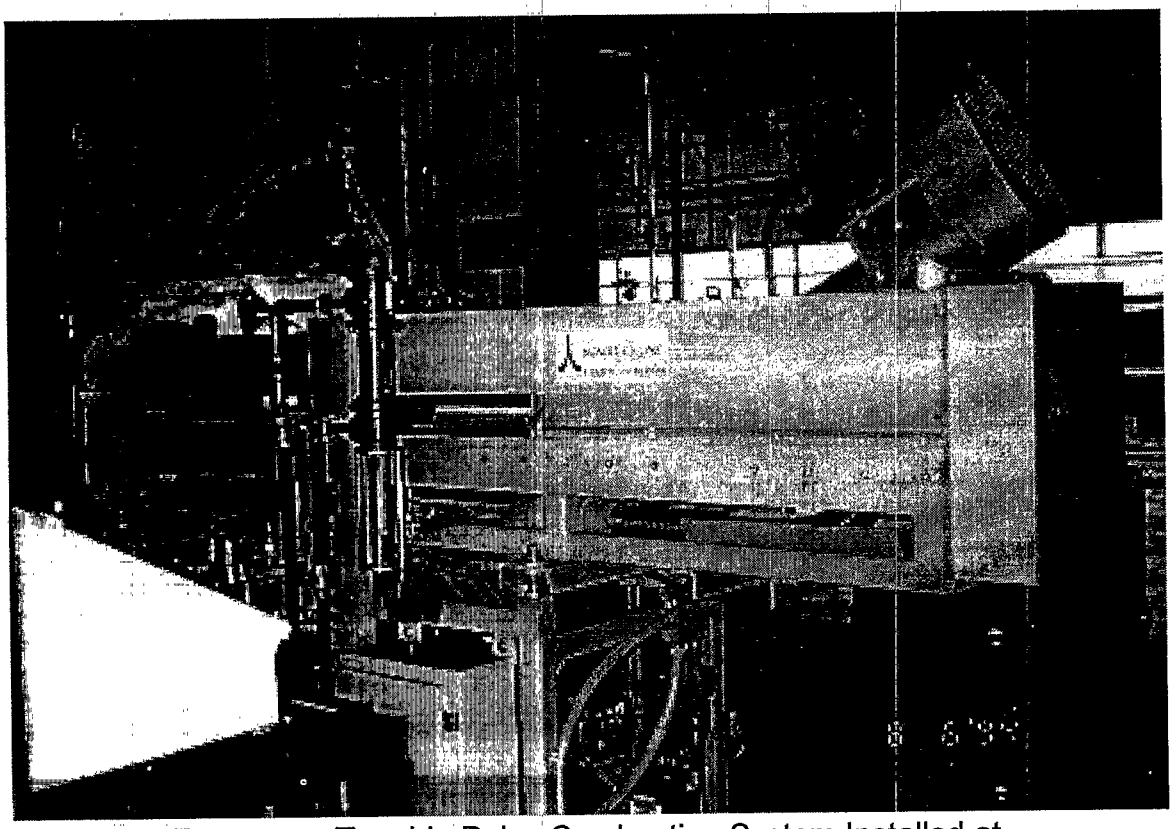

Frequency-Tunable Pulse Combustion System Installed at EPA's Research Facility

The SITE Program assesses but does not approve or endorse technologies.

velocities of these gas oscillations help mix the gases in the chamber and thus reduce or eliminate stratification effects.

The Sonotech system can function alone or as a supplemental retrofit to an existing combustion system. In the latter application, the frequency-tunable pulse combustion system can supply as little as 2 to 10 percent of the total energy requirements. The total fuel supplied to the main burner and the Sonotech system should be less than the amount of fuel supplied to the main burner before retrofitting.

WASTE APPLICABILITY:

This technology can be used with any material that can be treated in a conventional incinerator. Sonotech, Inc., believes that the technology is ready for incineration of hazardous, municipal, and medical wastes.

STATUS:

This technology was accepted into the SITE Demonstration Program in 1992. The 6-week demonstration evaluated whether the technology improved the performance of a larger scale incineration system. To meet this goal, the pilot-scale rotary kiln incinerator at EPA's Incineration Research Facility in Jefferson, Arkansas was retrofit with a Sonotech system. The demonstration took place from September to October 1994. The retrofit incinerator was used to treat coal- and oil-gasification wastes, traditionally incinerated with conventional technology. The Technology Capsule (EPA/540/R-95/502a) is available from EPA. More detailed results will be available from EPA in early 1997.

DEMONSTRATION RESULTS:

The Sonotech system increased the incinerator waste feed rate capacity by 13 to 21 percent compared to conventional combustion. As the demonstration waste had significant heat content,the capacity increase was equivalent to a reduction in the auxiliary fuel needed to treat a unit mass of waste from 21,100 British thermal unit/pound (Btu/lb) for conventional combustion to 18,000 Btu/lb for the Sonotech system. Visual observations indicated improved mixing in the incinerator cavity with the Sonotech system operating.

Benzene and naphthalene DREs were greater than 99.99 percent. The average concentration of carbon monoxide exiting the afterburner, corrected to 7 percent oxygen, decreased from 20 parts per million (ppm) with conventional combustion to 14 ppm with the Sonotech system. The average concentration of nitrogen oxides exiting the after burner, corrected to 7 percent oxygen, decreased from 82 ppm with conventional combustion to 77 ppm with the Sonotech system. Average soot emissions exiting the afterburner, corrected to 7 percent oxygen, were reduced from 1.9 milligrams per dry standard cubic meter (mg/dscm) for conventional combustion to less than 1.0 mg/dscm with the Sonotech system. Total air requirements for system combustion, determined from stoichiometric calculations, were lower with the Sonotech system in operation.

FOR FURTHER INFORMATION:

EPA PROJECT MANAGER:
Marta K. Richards
U.S. EPA
National Risk Management Research Laboratory
26 West Martin Luther King Drive
Cincinnati, OH 45268
513-569-7692
Fax: 513-569-7676

TECHNOLOGY DEVELOPER CONTACT:
Ben Zinn
Sonotech, Inc.
3656 Paces Valley Road
Atlanta, GA 30327
404-894-3033
Fax: 404-894-2760

The SITE Program assesses but does not approve or endorse technologies.

STC REMEDIATION, INC.
(formerly SILICATE TECHNOLOGY CORPORATION)
(Organic Stabilization and Chemical Fixation/Solidification)

TECHNOLOGY DESCRIPTION:

STC Remediation, Inc. (STC Remediation), has developed both chemical organic stabilization and chemical fixation/solidification technologies that treat inorganic and organic solid hazardous wastes (see photograph below). Leachable organic contaminant concentrations are reduced to well below regulatory limits. The chemical fixation/solidification technology forms insoluble chemical compounds, reducing leachable inorganic contaminant concentrations in soils and sludges.

STC Remediation's technology has been successfully implemented on numerous full-scale hazardous waste remediation projects, successfully stabilizing more than 750,000 tons of hazardous soils, sediments, and sludges. These sites include Superfund sites and industrial sites across the United States and in Italy.

STC Remediation has evaluated various materials handling and mixing systems for use on full-scale remediation projects. Materials handling processes consist of pretreatment processes for screening and crushing contaminated soils, and placement and conveying systems for handling treated material. Mixing systems consist of various batching plants, pug mills, and high-shear batch mixing systems to properly meter and mix reagents with contaminated soils. STC Remediation provides complete treatability study services during project development and on site technical services and/or contracting services during full scale remediation to ensure effective

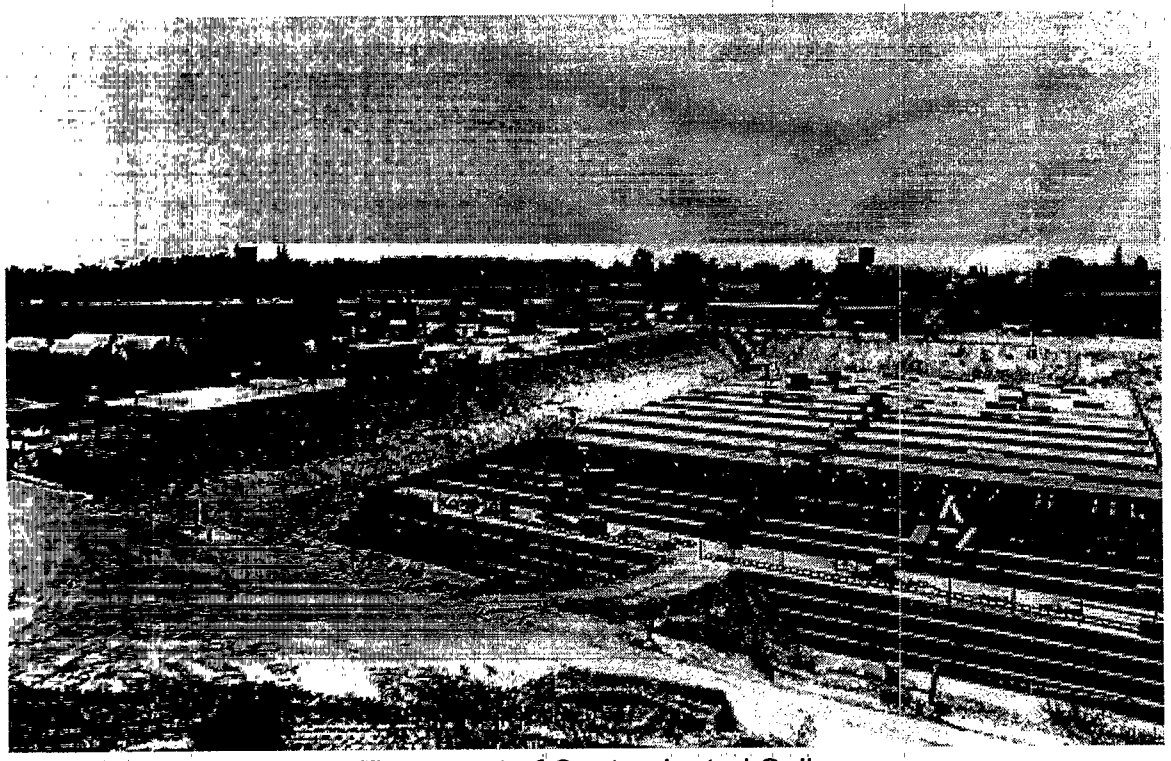

Treatment of Contaminated Soil

The SITE Program assesses but does not approve or endorse technologies.

application of the treatment technologies, documentation, and quality assurance/quality control procedures during the treatment process.

WASTE APPLICABILITY:

STC Remediation's technology can treat a wide variety of hazardous soils, sludges, and wastewaters, including the following:

- Soils and sludges contaminated with inorganics, including most metals, cyanides, fluorides, arsenates, chromates, and selenium
- Soils and sludges contaminated with organics, including halogenated aromatics, polynuclear aromatic hydrocarbons, and aliphatic compounds
- Wastewaters contaminated with heavy metals and emulsified and dissolved organic compounds, excluding low-molecular-weight organic contaminants such as alcohols, ketones, and glycols

STATUS:

This technology was accepted into the SITE Demonstration Program in 1988, and the demonstration was completed in November 1990 at the Selma Pressure Treating (SPT) Superfund site in Selma, California. STC Remediation was subsequently selected for the full-scale remediation of the SPT site, which is contaminated with organics, mainly pentachlorophenol (PCP), and inorganics, mainly arsenic, chromium, and copper. The Applications Analysis Report (EPA/540/AR-92/010) is available through the National Technology Information Service (Order No. PB93-172948). The Technology Evaluation Report (EPA/540/R-92/010) and Demonstration Bulletin (EPA/540/MR-92/010) are available from EPA.

DEMONSTRATION RESULTS:

The SITE demonstration yielded the following results:

- The organic stabilization technology reduced total extractable PCP concentrations up to 97 percent. The chemical fixation/stabilization technology stabilized the residual PCP concentrations to very low leachable levels (from 5 to less than 0.3 milligrams per liter).
- STC Remediation's technology immobilized arsenic and copper, while chromium remained well within regulatory limits.
- Long-term monitoring at 18 and 32 months following the demonstration project provided comparable results for PCP, arsenic, and copper, while chromium remained well within regulatory limits.
- The treated wastes had moderately high unconfined compressive strength, averaging 300 pounds per square inch (psi) after 28 days, increasing to more than 700 psi after 18 months.
- Permeability of the treated waste was less than 1.7×10^{-7} centimeters per second). The relative cumulative weight loss after 12 wet/dry and 12 freeze/thaw cycles was negligible (less than 1 percent).
- Treatment costs depend on specific waste characteristics.

FOR FURTHER INFORMATION:

EPA PROJECT MANAGER:
Edward Bates
U.S. EPA
National Risk Management Research Laboratory
26 West Martin Luther King Drive
Cincinnati, OH 45268
513-569-7774
Fax: 513-569-7676

TECHNOLOGY DEVELOPER CONTACTS:
Scott Larsen or Stephen Pegler
STC Remediation, Inc.
7650 East Redfield Road, Suite D-5
Scottsdale, AZ 85260
602-948-7100
Fax: 602-991-3173

The SITE Program assesses but does not approve or endorse technologies.

TERRA-KLEEN RESPONSE GROUP, INC.
(Solvent Extraction Treatment System)

TECHNOLOGY DESCRIPTION:

Terra-Kleen Response Group, Inc. (Terra-Kleen), developed the solvent extraction treatment system to remove semivolatile and nonvolatile organic contaminants from soil. This batch process system uses a proprietary solvent blend to separate hazardous constituents from soils, sediments, sludge, and debris.

A flow diagram of the Terra-Kleen treatment system is shown below. Treatment begins after excavated soil is loaded into the solvent extraction tanks. Clean solvent from the solvent storage tank is pumped into the extraction tanks. The soil and solvent mixture is held in the extraction tanks long enough to solubilize organic contaminants into the solvent, separating them from the soil. The contaminant-laden solvent is then removed from the extraction tanks and pumped into the sedimentation tank. Suspended solids settle or are flocculated in the sedimentation tank, and are then removed.

Following solvent extraction of the organic contaminants, any residual solvent in the soil is removed using soil vapor extraction and biological treatment. Soil vapor extraction removes the majority of the residual solvent, while biological treatment reduces residual solvent to trace levels. The treated soils are then removed from the extraction tanks.

Contaminant-laden solvents are cleaned for reuse by Terra-Kleen's solvent regeneration process. The solvent regeneration process begins by pumping contaminant-laden solvent from the sedimentation tank through a microfiltration unit and a proprietary solvent purification station. The microfiltration unit first removes any fines remaining in the solvent. The solvent purification station separates organic contaminants from the solvent and concentrates them, reducing the amount of hazardous waste for off-site disposal. The solvent is pumped into the solvent storage tank for use in treating additional soil.

WASTE APPLICABILITY:

The Terra-Kleen solvent extraction treatment system is a waste minimization process designed to remove the following organic contaminants from soils: polychlorinated biphenyls (PCB), chlorinated pesticides, polynuclear aromatic hydrocarbons (PAH), pentachlorophenol, creosote, polychlorinated dibenzo-p-dioxins (PCDD), chlorinated pesticides, and polychlorinated dibenzofurans (PCDF). The system is transportable and can be configured to

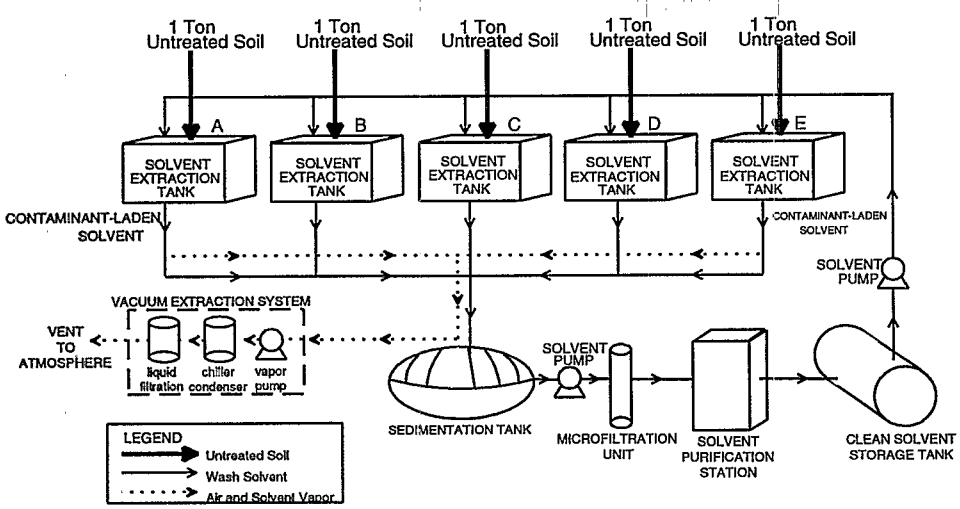

Solvent Extraction Treatment System

The SITE Program assesses but does not approve or endorse technologies.

treat small quantities of soil (1 to 1,000 cubic yards) as well as large volumes generated at remedial sites.

STATUS:

The solvent extraction treatment system was demonstrated during May and June 1994 at Naval Air Station North Island (NASNI) Site 4 in San Diego, California. Soils at Site 4 are contaminated with heavy metals, volatile organic compounds (VOC), PCBs (Aroclor 1260), and furans. The Technology Capsule (EPA/540/R-94/521a) and Demonstration Bulletin (EPA/540/MR-94/521) are available from EPA. The Innovative Technology Evaluation Report is available from EPA.

Several full-scale solvent extraction units are in operation at this time. Terra-Kleen has removed PCBs from 10,000 tons of soil at three sites within NASNI, and completed cleanup of a remote Air Force Base PCB site in Alaska. A full-scale system has also removed DDT, DDD, and DDE from clay soil at the Naval Communication Station in Stockton, California.

Terra-Kleen has been selected to participate in the Rapid Commercialization Initiative (RCI). RCI was created by the Department of Commerce, Department of Defense, Department of Energy (DOE), and EPA to assist in the integration of innovative technologies into the marketplace. Under RCI, Terra-Kleen is expanding its capabilities to process PCBs and VOCs in low-level radioactive wastes. The pilot project for this effort will begin in early 1997 at DOE's Fernald Plant near Cincinnati, Ohio.

DEMONSTRATION RESULTS:

Findings from the SITE demonstration are summarized as follows:

- PCB Aroclor 1260 concentrations were reduced from an average of 144 milligrams per kilogram (mg/kg) to less than 1.71 mg/kg, an overall removal efficiency of 98.8 percent.
- NASNI untreated soil contained a moisture content of 0.83 percent; a particle size distribution of 80 percent sand, 15 percent gravel, and 5 percent clay; and an overall oil and grease concentration of 780 mg/kg.
- Hexachlorodibenzofuran and pentachlorodibenzofuran concentrations were reduced by 92.7 percent and 84.0 percent, respectively. Oil and grease concentrations were reduced by 65.9 percent.

Additional data were collected at the Naval Communication Station in Stockton, California. The system treated soil contaminated with chlorinated pesticides at concentrations up to 600 mg/kg. Samples taken during system operation indicated that soil contaminated with DDD, DDE, and DDT was reduced below 1 mg/kg, an overall removal efficiency of 98.8 to 99.8 percent.

FOR FURTHER INFORMATION:

EPA PROJECT MANAGER:
Mark Meckes or Terrence Lyons
U.S. EPA
National Risk Management Research Laboratory
26 West Martin Luther King Drive
Cincinnati, OH 45268
513-569-7348 or 513-569-7589
Fax: 513-569-7328 or 513-569-7676

TECHNOLOGY DEVELOPER CONTACT:
Alan Cash
Terra-Kleen Response Group, Inc.
3970 B Sorrento Valley Blvd.
San Diego, CA 92121
619-558-8762
Fax: 619-558-8759

The SITE Program assesses but does not approve or endorse technologies.

TERRA VAC
(In Situ and Ex Situ Vacuum Extraction)

TECHNOLOGY DESCRIPTION:

In situ or ex situ vacuum extraction is a process that removes volatile organic compounds (VOC) and many semivolatile organic compounds (SVOC) from the vadose, or unsaturated, soil zone. These compounds can often be removed from the vadose zone before they contaminate groundwater. Soil piles also may be cleaned by ex situ vacuum extraction. The in situ vacuum extraction process has been patented by others and licensed to Terra Vac and others in the United States.

The extraction process uses readily available equipment, including extraction and monitoring wells, manifold piping, air-liquid separators, and vacuum pumps. Vacuum extraction systems may vent directly to the atmosphere or through an emission control device. After the contaminated area is generally characterized, extraction wells are installed and connected by piping to the vacuum extraction and vapor treatment systems.

First, a vacuum pump creates a vacuum in the soil causing in situ volatilization and draws air through the subsurface. Contaminants are removed from the extraction wells and pass to the air-liquid separator. The vapor-phase contaminants may be treated with an activated carbon adsorption filter, a catalytic oxidizer, or another emission control system before the gases are discharged to the atmosphere. Subsurface vacuum and soil vapor concentrations are monitored with vadose zone monitoring wells.

The technology can be used in most hydrogeological settings and may reduce soil contaminant levels from saturated conditions to nondetectable. The process also works in fractured bedrock and less permeable soils (clays) with sufficient permeability. The process may be used to enhance bioremediation (bioventing). It also may be used in conjunction with dual vacuum extraction, soil heating, pneumatic fracturing, and chemical oxidation to recover a wide range of contaminants. The figure below illustrates one possible configuration of the process.

Typical contaminant recovery rates range from 20 to 2,500 pounds (10 to 1,000 kilograms) per day, depending on the degree of site contamination and the design of the vacuum extraction system.

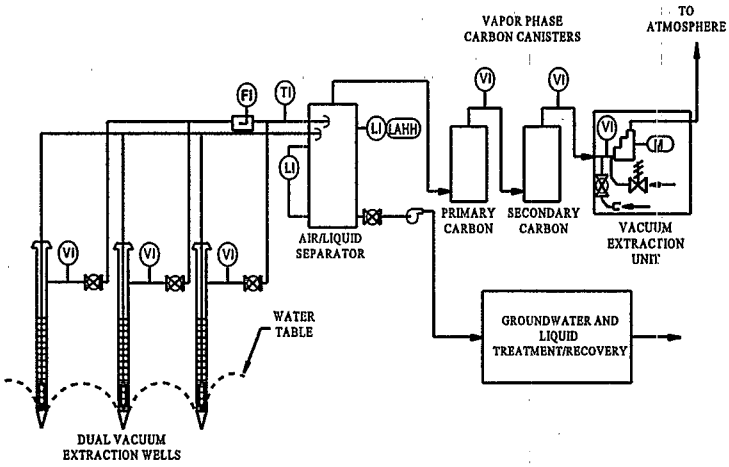

In Situ Dual Vacuum Extraction Process

The SITE Program assesses but does not approve or endorse technologies.

WASTE APPLICABILITY:

The vacuum extraction technology may treat soils containing virtually any VOC. It has removed over 40 types of chemicals from soils and groundwater, including solvents and gasoline- and diesel-range hydrocarbons.

STATUS:

The process was accepted into the SITE Demonstration Program in 1987. The process was demonstrated under the SITE Demonstration Program at the Groveland Wells Superfund site in Groveland, Massachusetts, from December 1987 through April 1988. The technology remediated soils contaminated with trichloroethene (TCE). The Technology Evaluation Report (EPA/540/5-89/003a) and Applications Analysis Report (EPA/540/A5-89/003) are available from EPA.

The vacuum extraction process was first demonstrated at a Superfund site in Puerto Rico in 1984. Terra Vac has since applied the technology at more than 20 additional Superfund sites and at more than 700 other waste sites throughout the United States, Europe, and Japan.

DEMONSTRATION RESULTS:

During the Groveland Wells SITE demonstration, four extraction wells pumped contaminants to the process system. During a 56-day period, 1,300 pounds of VOCs, mainly TCE, were extracted from both highly permeable strata and less permeable (10^{-7} centimeters per second) clays. The vacuum extraction process achieved nondetectable VOC levels at some locations and reduced the VOC concentration in soil gas by 95 percent. Average reductions of soil concentrations during the demonstration program were 92 percent for sandy soils and 90 percent for clays. Field evaluations yielded the following conclusions:

- Permeability of soils is an important consideration when applying this technology.
- Pilot demonstrations are necessary at sites with complex geology or contaminant distributions.
- Treatment costs are typically $40 per ton of soil but can range from less than $10 to $80 per ton of soil, depending on the size of the site and the requirements for gas effluent or wastewater treatment.
- Contaminants should have a Henry's constant of 0.001 or higher.

FOR FURTHER INFORMATION:

TECHNOLOGY DEVELOPER CONTACTS:
Joseph A. Pezzullo
Vice President
Terra Vac
Windsor Industrial Park, Building 15
92 N. Main Street
P.O. Box 468
Windsor, NJ 08561-0468
609-371-0070
Fax: 609-371-9446
E-mail: jpezzull0@aol.com

Esteban Garcia
Corporation Marketing Manager
Terra Vac
17821 Mitchell Avenue
Irvine, CA 92614-6003
714-252-8900
Fax: 714-252-8901
E-mail: esteban@terravac.com
Home page: www.terravac.com

The SITE Program assesses but does not approve or endorse technologies.

TEXACO INC.
(Texaco Gasification Process)

TECHNOLOGY DESCRIPTION:

The Texaco Gasification Process (TGP) is an entrained-bed, noncatalytic, partial oxidation process in which carbonaceous substances react at elevated temperatures and pressures, producing a gas containing mainly carbon monoxide and hydrogen (see figure below). This product, called synthesis gas, can be used to produce other chemicals or can be burned as fuel. Inorganic materials in the feed melt are removed as a glass-like slag.

This technology has operated commercially for over 40 years with feedstocks such as natural gas, heavy oil, coal, and petroleum coke. The TGP processes waste feedstocks at pressures above 20 atmospheres and temperatures between 2,200 and 2,800 °F.

Slurried wastes are pumped to a specially designed injector mounted at the top of the refractory-lined gasifier. The waste feed, oxygen, and an auxiliary fuel such as coal react and flow downward through the gasifier to a quench chamber that collects the slag. The slag is eventually removed through a lockhopper. A scrubber further cools and cleans the synthesis gas. Fine particulate matter removed by the scrubber may be recycled to the gasifier; a sulfur recovery system may also be added.

After the TGP converts organic materials into synthesis gas, the cooled, water-scrubbed product gas, consisting mainly of hydrogen and carbon monoxide, essentially contains no hydrocarbons heavier than methane. Metals and other ash constituents become part of the glassy slag.

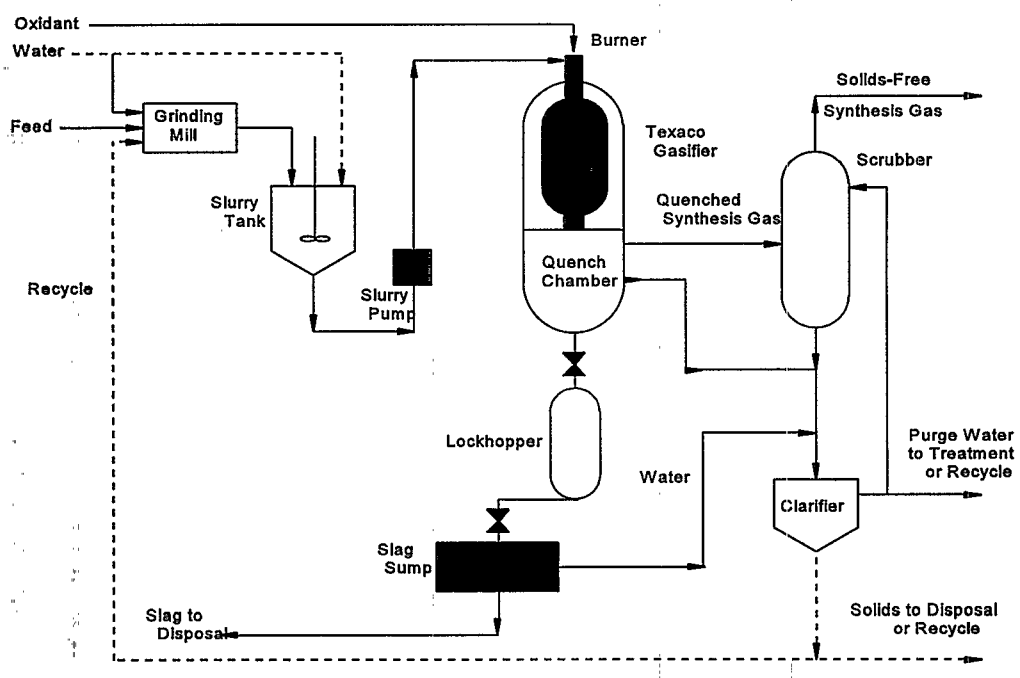

Texaco Gasification Process

The SITE Program assesses but does not approve or endorse technologies.

The TGP can be configured as a transportable system capable of processing about 100 tons of hazardous waste per day. This system would produce about 6 million standard cubic feet of usable synthesis gas per day with a heating value of approximately 250 British thermal units per standard cubic foot.

WASTE APPLICABILITY:

The TGP can treat the following wastes:

- Contaminated soils, sludges, and sediments that contain both organic and inorganic constituents
- Chemical wastes
- Petroleum residues

Solids in the feed are ground and pumped in a slurry containing 40 to 70 percent solids by weight and 30 to 60 percent liquid, usually water.

Texaco has demonstrated gasification of coal liquefaction residues, petroleum production tank bottoms, municipal sewage sludge, and surrogate contaminated soil. Texaco is operating a gasification facility at its El Dorado, Kansas refinery that will convert up to 170 tons per day of petroleum coke and Resource Conservation and Recovery Act-listed refinery wastes into usable synthesis gas.

STATUS:

The TGP was accepted into the SITE Demonstration Program in July 1991. A demonstration was conducted in January 1994 at Texaco's Montebello Research Laboratory in California using a mixture of clean soil, coal, and contaminated soil from the Purity Oil Sales Superfund site, located in Fresno, California. The mixture was slurried and spiked with lead, barium, and chlorobenzene. Forty tons of slurry was gasified during three demonstration runs. The Demonstration Bulletin (EPA/540/MR-95/514), Technology Capsule (EPA/540/R-94/514a), and Innovative Technology Evaluation Report (EPA/540/R-94/514) are available from EPA.

DEMONSTRATION RESULTS:

Findings from the SITE demonstration are summarized below:

- The average composition of the dry synthesis gas product from the TGP consisted of 37 percent hydrogen, 36 percent carbon monoxide, and 21 percent carbon dioxide. The only remaining organic contaminant greater than 0.1 part per million (ppm) was methane at 55 ppm.
- The destruction and removal efficiency for the volatile organic spike (chlorobenzene) was greater than the 99.99 percent goal.
- Samples of the primary TGP solid product, coarse slag, averaged below the Toxicity Characteristic Leaching Procedure (TCLP) limits for lead (5 milligrams per liter [mg/L]) and barium (100 mg/L). Volatile heavy metals tended to partition to and concentrate in the secondary TGP solid products, fine slag and clarifier solids. These secondary products were above the TCLP limit for lead.

FOR FURTHER INFORMATION:

EPA PROJECT MANAGER:
Marta K. Richards
U.S. EPA
National Risk Management Research Laboratory
26 West Martin Luther King Drive
Cincinnati, OH 45268
513-569-7692
Fax: 513-569-7676

TECHNOLOGY DEVELOPER CONTACT:
Tim Leininger
Montebello Technology Center
Texaco Global Gas & Power
329 N. Durfee Avenue
S. El Monte, CA 91733
562-699-0948
Fax: 562-699-7408

The SITE Program assesses but does not approve or endorse technologies.

TORONTO HARBOUR COMMISSION
(Soil Recycling)

TECHNOLOGY DESCRIPTION:

The Toronto Harbour Commission's (THC) soil recycling process removes inorganic and organic contaminants from soil to produce a reusable fill material (see photograph below). The process consists of three technologies operating in series: a soil washing technology; a technology that removes inorganic contamination by chelation; and a technology that uses chemical and biological treatment to reduce organic contaminants.

The process uses an attrition soil wash plant to remove relatively uncontaminated coarse soil fractions using mineral processing equipment while concentrating the contaminants in a fine slurry which is routed to the appropriate process for further treatment. The wash process includes a trommel washer to remove clean gravel, hydrocyclones to separate the contaminated fines, an attrition scrubber to free fines from sand particles, and a density separator to remove coal and peat from the sand fraction.

If only inorganic contaminants are present, the slurry can be treated in the inorganic chelator unit. This process uses an acid leach to free the inorganic contaminant from the fine slurry and then removes the metal using solid chelating agent pellets in a patented countercurrent contactor. The metals are recovered by electrowinning from the chelation agent regenerating liquid.

Organic removal is accomplished by first chemically pretreating the slurry from the wash plant or the metal removal process. Next, biological treatment is applied in upflow slurry reactors using the bacteria which have developed

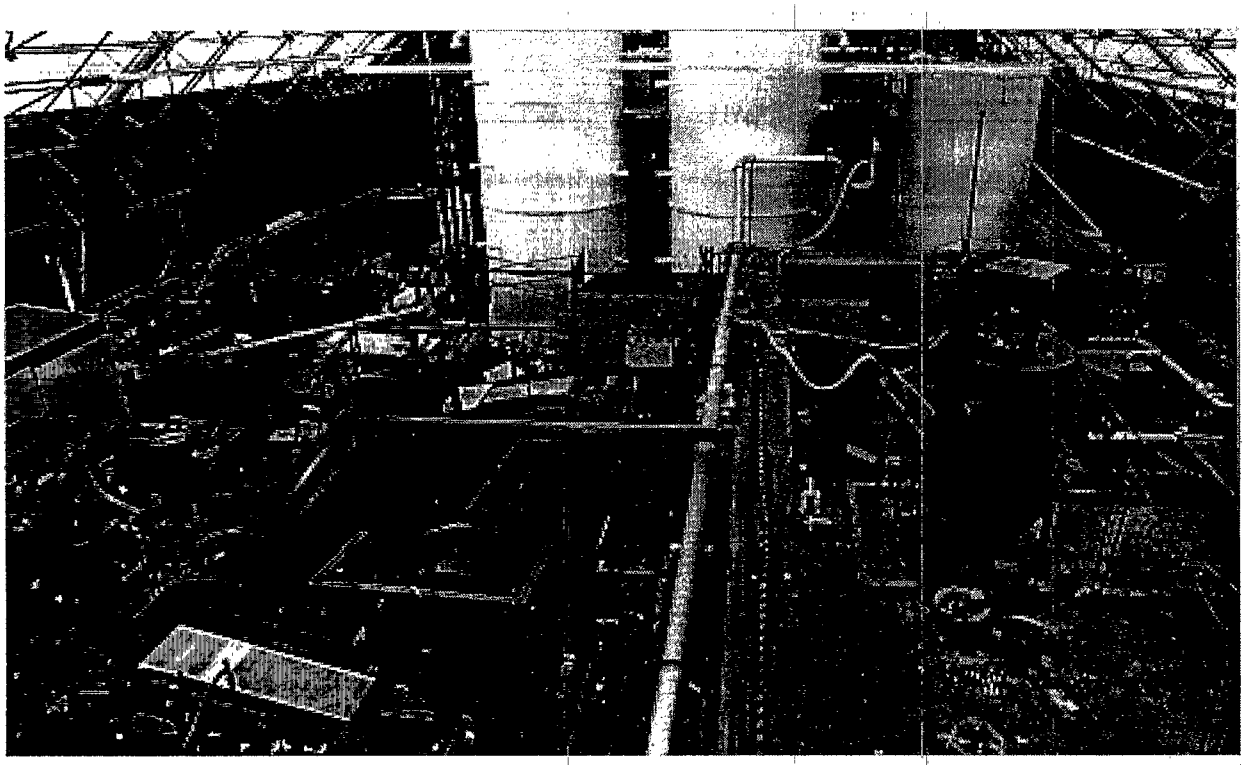

Soil Washing Plant (Metal Extraction Screwtubes in Foreground and Bioslurry Reactors in Background)

The SITE Program assesses but does not approve or endorse technologies.

naturally in the soils. The treated soil is dewatered using hydrocyclones and returned to the site from which it was excavated.

WASTE APPLICABILITY:

The technology is designed to reduce organic and inorganic contaminants in soils. The process train approach is most useful when sites have been contaminated as a result of multiple uses over a period of time. Typical sites where the process train might be used include refinery and petroleum storage facilities, sites with metal processing and metal recycling histories, and manufactured gas and coal or coke processing and storage sites. The process is less suited to soils with undesirable high inorganic constituents which result from the inherent mineralogy of the soils.

STATUS:

The THC soil recycling process was accepted into the SITE Demonstration Program in 1991. The soil recycling process was demonstrated at a site within the Toronto Port Industrial District that had been used for metals finishing and refinery products and petroleum storage. Demonstration sampling took place in April and May 1992.

Results have been published in the Demonstration Bulletin (EPA/520-MR-92/015), the Applications Analysis Report (EPA/540-AR-93/517), the Technology Evaluation Report (EPA/540/R-93/517), and the Technology Demonstration Summary (EPA/540/SR-93/517). These reports are available from EPA.

This technology is no longer available through a vendor. For further information on the technology, contact the EPA Project Manager.

DEMONSTRATION RESULTS:

The demonstration results showed that soil washing produced clean coarse soil fractions and concentrated the contaminants in the fine slurry. The chemical treatment process and biological slurry reactors, when operated on a batch basis with a nominal 35-day retention time, achieved at least a 90 percent reduction in simple polyaromatic hydrocarbon compounds such as naphthalene, but did not meet the approximately 75 percent reduction in benzo(a)pyrene required to achieve the cleanup criteria.

The biological process discharge did not meet the cleanup criteria for oil and grease, and the process exhibited virtually no removal of this parameter. THC believes that the high outlet oil and grease values are the result of the analytical extraction of the biomass developed during the process.

The hydrocyclone dewatering device did not achieve significant dewatering. Final process slurries were returned to the excavation site in liquid form.

The metals removal process achieved a removal efficiency for toxic heavy metals such as copper, lead, mercury, and nickel of approximately 70 percent.

The metals removal process equipment and chelating agent were fouled by free oil and grease contamination, forcing sampling to end prematurely. Biological treatment or physical separation of oil and grease will be required to avoid such fouling.

FOR FURTHER INFORMATION:

EPA PROJECT MANAGER:
Teri Richardson
U.S. EPA
National Risk Management Research Laboratory
26 West Martin Luther King Drive
Cincinnati, OH 45268
513-569-7949
Fax: 513-569-7105

The SITE Program assesses but does not approve or endorse technologies.

UNITED STATES ENVIRONMENTAL PROTECTION AGENCY
(Excavation Techniques and Foam Suppression Methods)

TECHNOLOGY DESCRIPTION:

Excavation techniques and foam suppression methods have been developed through a joint EPA effort involving the National Risk Management Research Laboratory (Cincinnati, Ohio), Air and Energy Engineering Research Laboratory (Research Triangle Park, North Carolina), and EPA Region 9 to evaluate control technologies during excavation operations.

In general, excavating soil contaminated with volatile organic compounds (VOC) results in fugitive air emissions. When using this technology, the area to be excavated is surrounded by a temporary enclosure (see photograph below). Air from the enclosure is vented through an emission control system before being released to the atmosphere. For example, in the case of hydrocarbon and sulfur dioxide emissions, a scrubber and a carbon adsorptionunit would be used to treat emissions. As an additional emission control method, a vapor suppressant foam can be applied to the soil before and after excavation.

WASTE APPLICABILITY:

This technology is suitable for controlling VOC and sulfur dioxide emissions during excavation of contaminated soil.

STATUS:

This technology was demonstrated at the McColl Superfund site in Fullerton, California, in June and July 1990. An enclosure 60 feet wide, 160 feet long, and 26 feet high was erected over an area contaminated with VOCs and sulfur dioxide. A backhoe removed the overburden and

Excavation Area Enclosure

The SITE Program assesses but does not approve or endorse technologies.

excavated underlying waste. Three distinct types of waste were encountered during excavation: oily mud, tar, and hard coal-like char.

The following documents, which contain results from the demonstration, are available from EPA:

- Applications Analysis Report (EPA/540/AR-92/015)
- Technology Evaluation Report (EPA/540/R-93/015)
- Demonstration Summary (EPA/540/SR-92/015)

DEMONSTRATION RESULTS:

During excavation, the 5-minute average air concentrations within the enclosed area were up to 1,000 parts per million (ppm) for sulfur dioxide and up to 492 ppm for total hydrocarbons (THC). The air pollution control system removed up to 99 percent of the sulfur dioxide and up to 70 percent of the THCs.

The concentrations of air contaminants inside the enclosure were higher than expected. These high concentrations were due in part to the inability of the vapor suppressant foams to form an impermeable membrane over the exposed wastes. The foam reacted with the highly acidic waste, causing the foam to degrade. Furthermore, purge water from foaming activities made surfaces slippery for workers and equipment.A total of 101 cubic yards of overburden and 137 cubic yards of contaminated waste was excavated. The tar waste was solidified and stabilized by mixing with fly ash, cement, and water in a pug mill. The char wastes did not require further processing.

FOR FURTHER INFORMATION:

EPA PROJECT MANAGER:
Jack Hubbard
U.S. EPA
National Risk Management Research Laboratory
26 West Martin Luther King Drive
Cincinnati, OH 45268
513-569-7507
Fax: 513-569-7620

The SITE Program assesses but does not approve or endorse technologies.

U.S. FILTER/WTS ULTROX
(Ultraviolet Radiation and Oxidation)

TECHNOLOGY DESCRIPTION:

This ultraviolet (UV) radiation and oxidation technology uses UV radiation, ozone, and hydrogen peroxide to destroy toxic organic compounds, particularly chlorinated hydrocarbons, in water. The technology oxidizes compounds that are toxic or refractory (resistant to biological oxidation) to parts per million (ppm) or parts per billion (ppb) levels.

The UV radiation and oxidation system consists of the UV-oxidation reactor, an air compressor and ozone generator module, and a hydrogen peroxide feed system (see figure below). The system is skid-mounted and portable, and permits on-site treatment of a wide variety of liquid wastes. Reactor size is determined by the expected wastewater flow rate and the necessary hydraulic retention time needed to treat the contaminated water. The approximate UV intensity, and ozone and hydrogen peroxide doses, are determined from pilot-scale studies.

Reactor influent is simultaneously exposed to UV radiation, ozone, and hydrogen peroxide to oxidize the organic compounds. Off-gas from the reactor passes through a catalytic ozone destruction Decompozon™ unit, which reduces ozone levels before air venting. The Decompozon™ unit also destroys volatile organic compounds (VOC) stripped off in the reactor.

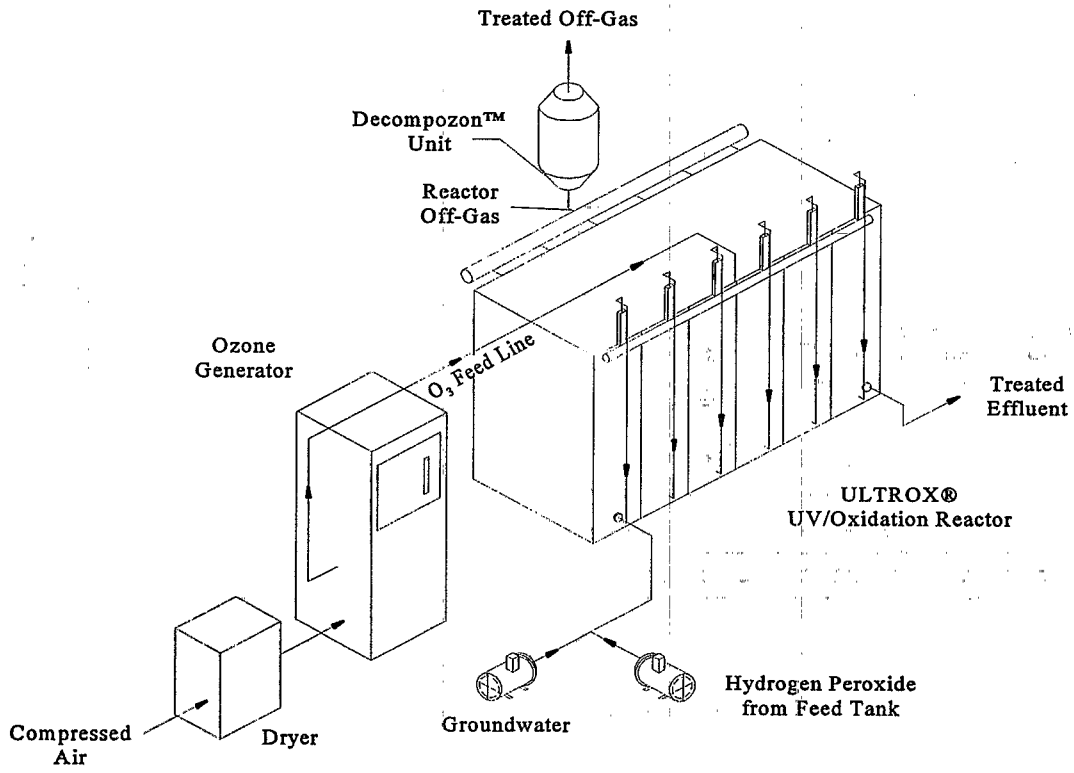

UV Radiation and Oxidation System (Isometric View)

The SITE Program assesses but does not approve or endorse technologies.

Effluent from the reactor is tested and analyzed before disposal.

WASTE APPLICABILITY:

The UV radiation and oxidation system treats contaminated groundwater, industrial wastewaters, and leachates containing halogenated solvents, phenol, pentachlorophenol, pesticides, polychlorinated biphenyls, explosives, benzene, toluene, ethylbenzene, xylene, methyl tertiary butyl ether, and other organic compounds. The system also treats low-level total organic carbon and reduces chemical oxygen demand and biological oxygen demand.

STATUS:

This technology was accepted into the SITE Demonstration Program in 1989. A field-scale demonstration of the system was completed in March 1989 at the Lorentz Barrel and Drum Company site in San Jose, California. The testing program was designed to evaluate system performance while varying five operating parameters: (1) influent pH, (2) retention time, (3) ozone dose, (4) hydrogen peroxide dose, and (5) UV radiation intensity. The Demonstration Bulletin (EPA/540/M5-89/012), Technology Demonstration Summary (EPA/540/S5-89/012), Applications Analysis Report (EPA/540/A5-89/012), and Technology Evaluation Report (EPA/540/5-89/012) are available from EPA.

The technology is fully commercial, with over 30 systems installed. Units with flow rates ranging from 5 gallons per minute (gpm) to 1,050 gpm are in use at various industries and site remediations, including aerospace, U.S. Department of Energy, U.S. Department of Defense, petroleum, pharmaceutical, automotive, woodtreating, and municipal facilities.UV radiation and oxidation technology has been included in records of decision for several Superfund sites where groundwater pump-and-treat remediation methods will be used.

DEMONSTRATION RESULTS:

Contaminated groundwater treated by the system during the SITE demonstration met regulatory standards at the appropriate parameter levels. Out of 44 VOCs in the wastewater, trichloroethene, 1,1-dichloroethane, and 1,1,1-trichloroethane were chosen as indicator parameters. All three are relatively refractory to conventional oxidation.

The Decompozon™ unit reduced ozone to less than 0.1 ppm, with efficiencies greater than 99.99 percent. VOCs present in the air within the treatment system were not detected after passing through the Decompozon™ unit. The system produced no harmful air emissions. Total organic carbon removal was low, implying partial oxidation of organics without complete conversion to carbon dioxide and water.

FOR FURTHER INFORMATION:

EPA PROJECT MANAGER:
Norma Lewis
U.S. EPA
National Risk Management Research Laboratory
26 West Martin Luther King Drive
Cincinnati, OH 45268
513-569-7665
Fax: 513-569-7787

TECHNOLOGY DEVELOPER CONTACT:
Dr. Richard Woodling
U.S. Filter
2805 Mission College Blvd.
Santa Clara, CA 95054
408-588-2609
Fax: 408-567-0396

The SITE Program assesses but does not approve or endorse technologies.

UNIVERSITY OF NEBRASKA - LINCOLN
(Center Pivot Spray Irrigation System)

TECHNOLOGY DESCRIPTION:

Spray irrigation technology with "center pivots" and "linear" systems can be used to remediate groundwater contaminated with volatile organic compounds (VOC). The technology is commonly used to apply irrigation water to vegetable and row crops. While the systems were introduced to irrigate hilly terrain and excessively well-drained soils, the technology has been adapted in both groundwater quality and quantity management areas as a best management practice. This technology severely reduces water application rates and leaching relative to flood irrigation techniques.

The systems consist of an elevated pipeline with nozzles placed at close intervals. Groundwater is pumped through the pipeline and sprayed uniformly over a field as the pipeline pivots or linearly passes over the cropped area. The typical pump rate is between 800 and 2,000 gallons per minute (gpm). These self-propelled systems are highly mechanized and have low labor and operating requirements. The systems do not require level ground, and start-up costs are low.

The sprinkler method applies water over the irrigated area with a fine spray (see the photograph below). Water coverage over the irrigated area is controlled by the speed with which the "pivot" or "linear" system travels across the field. The heart of the sprinkler irrigation system is the nozzle, which has a small opening through which a high-velocity stream of water is emitted. As the high-velocity water stream leaves the nozzle, it strikes an impact pad and forms a thin film of water. The thin film of water produced by these pads breaks up into small droplets as it leaves the impact pad. Droplet size depends on the stream pressure and design of the impact pad.

The system used in the SITE demonstration program was a center pivot and was located on a seed-corn field in Hastings, Nebraska. The system was equipped with off-the-shelf, fog-

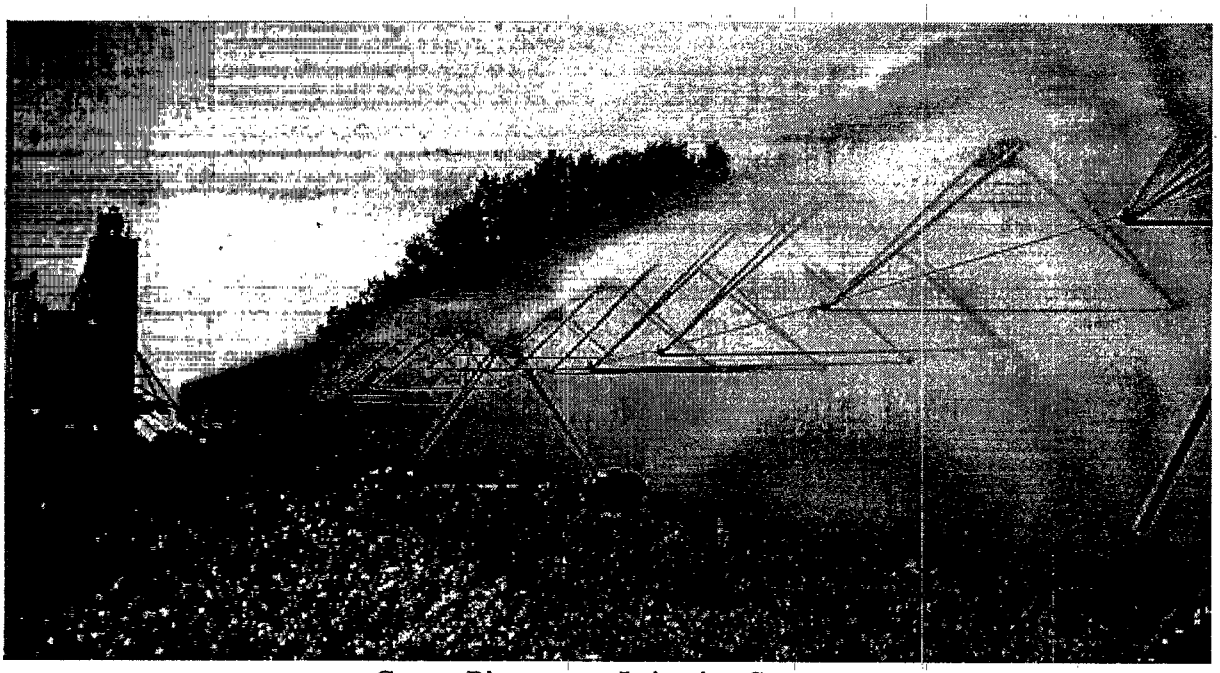

Center Pivot spray Irrigation System

The SITE Program assesses but does not approve or endorse technologies.

producing impact pads for improved volatilization efficiency.

A stratified water droplet collector (SWDC) simultaneously collected spray at four fall heights above ground level, and was specifically contracted for this project by the Dutton-Lainson Company in Hastings, Nebraska. With this device, droplets were collected at heights of 1.5, 4.5, 7.5, and 10.5 feet above the ground surface. Twelve SWDCs were installed parallel to the pivot arm to determine average volatilization efficiencies from the 340 nozzles on the pivot arm.

WASTE APPLICABILITY:

The sprinkler irrigation system is capable of remediating VOC-contaminated groundwater. Removal rates in excess of 95 percent have been demonstrated for groundwater containing ethylene dibromide (EDB), trichloroethene (TCE), 1,1,1-trichloroethane (TCA), and carbon tetrachloride (CT). The method will efficiently volatilize all common volatiles in groundwater that may originate from landfills, degreasers, dry cleaners, electrical industries, gas stations, or refineries. The residuals are transferred to the atmosphere where they are dispersed and most are rapidly degraded in ultraviolet light.

The technique may be limited to individual groundwater VOC concentrations that are less than 1 part per million if residual concentrations of VOCs are mandated to be near or below the maximum contaminant level prior to reaching the ground surface. Otherwise, the technique can be used in any agricultural setting where sufficient groundwater and irrigatable land are available.

STATUS:

The Center Pivot Spray Irrigation system was accepted into the SITE Demonstration Program in late 1995. Under a University of Nebraska project funded by the Cooperative State Research Service of the Department of Agriculture, field tests were completed in the summers of 1994 and 1995 in a seed-corn field in Hastings, Nebraska. The technology was demonstrated under the SITE Program in July 1996 at the North Landfill/FAR-MAR-CO Subsite in Hastings, Nebraska. The 50-acre site is a furrow-irrigated corn field underlain by commingled plumes of groundwater containing EDB, TCE, TCA, CT, 1,1-dichloroethene, and chloroform. The primary goal of the demonstration was to determine the efficiency of the system to remediate VOCs in groundwater to concentrations below the maximum contaminant levels. The results of this demonstration are available in the Innovative Technology Evaluation Report (EPA/540/R-09/502).

Clients involved in large pump-and-treat projects at several military bases are investigating the suitability of the system to their specific site situations. Potential clients include the U.S. Navy, the Army Corps of Engineers, and several state agencies. The technology is currently being used at the Lindsey Manufacturing site in Nebraska and near some grain elevators being remediated by Argonne Laboratory.

FOR FURTHER INFORMATION:

EPA PROJECT MANAGER:
Teri Richardson
U.S. EPA
National Risk Management Research Laboratory
26 West Martin Luther King Drive
Cincinnati, OH 45268
513-569-7949
Fax: 513-569-7105

TECHNOLOGY DEVELOPER CONTACT:
Roy Spalding
University of Nebraska - Lincoln
Water Center/Environmental Programs
103 Natural Resources Hall
P.O. Box 830844
Lincoln, NE 68583-0844
402-472-7558
Fax: 402-472-9599

The SITE Program assesses but does not approve or endorse technologies.

WASTECH, INC.
(Solidification and Stabilization)

TECHNOLOGY DESCRIPTION:

This technology solidifies and stabilizes organic and inorganic contaminants in soils, sludge, and liquid wastes. First, a proprietary reagent chemically bonds with contaminants in wastes. The waste and reagent mixture is then mixed with pozzolanic, cementitious materials, which combine to form a stabilized matrix. Reagents are selected based on target waste characteristics. Treated material is a nonleaching, high-strength, stabilized end-product.

The WASTECH, Inc. (WASTECH), technology uses standard engineering and construction equipment. Because the type and dose of reagents depend on waste characteristics, treatability studies and site investigations must be conducted to determine the proper treatment formula.

Treatment usually begins with waste excavation. Large pieces of debris in the waste must be screened and removed. The waste is then placed into a high shear mixer, along with premeasured quantities of water and SuperSet®, WASTECH's proprietary reagent (see figure below).

Next, pozzolanic, cementitious materials are added to the waste-reagent mixture, stabilizing the waste and completing the treatment process. The WASTECH technology does not generate by-products. The process may also be applied in situ.

WASTE APPLICABILITY:

The WASTECH technology can treat a wide variety of waste streams consisting of soils, sludges, and raw organic streams, including lubricating oil, evaporator bottoms, chelating agents, and ion-exchange resins, with contaminant concentrations ranging from parts per million levels to 40 percent by volume. The technology can also treat wastes generated by the petroleum, chemical, pesticide, and wood-preserving industries, as well as wastes generated by many other chemical manufacturing and industrial processes. The WASTECH technology can also be applied to mixed wastes containing organic, inorganic, and radioactive contaminants.

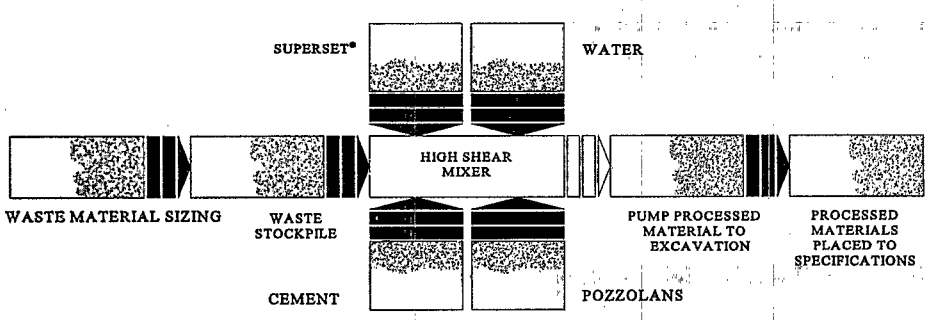

WASTECH Solidification and Stabilization Process

The SITE Program assesses but does not approve or endorse technologies.

STATUS:

The technology was accepted into the SITE Demonstration Program in spring 1989. A field demonstration at Robins Air Force Base in Warner Robins, Georgia was completed in August 1991. WASTECH subsequently conducted a bench-scale study in 1992 under glovebox conditions to develop a detailed mass balance of volatile organic compounds. The Innovative Technology Evaluation Report is available from EPA. The technology is being commercially applied to treat hazardous wastes contaminated with various organics, inorganics, and mixed wastes.

This technology is no longer available from the vendor. For further information about the process, contact the EPA Project Manager.

FOR FURTHER INFORMATION:

EPA PROJECT MANAGER:
Terrence Lyons
U.S. EPA
National Risk Management Research Laboratory
26 West Martin Luther King Drive
Cincinnati, OH 45268
513-569-7589
Fax: 513-569-7676

The SITE Program assesses but does not approve or endorse technologies.

ROY F. WESTON, INC.
(Low Temperature Thermal Treatment System)

TECHNOLOGY DESCRIPTION:

The Roy F. Weston, Inc. (Weston), low temperature thermal treatment (LT³®) system thermally desorbs organic compounds from contaminated soil without heating the soil to combustion temperatures. The transportable system (see photograph below) is assembled on three flat-bed trailers and requires an area of about 5,000 square feet, including ancillary and support equipment. The LT³® system consists of three segments: soil treatment, emissions control, and water treatment.

The LT³® thermal processor consists of two jacketed troughs, one above the other. Each trough houses four intermeshed, hollow screw conveyors. A front-end loader feeds soil or sludge onto a conveyor that discharges into a surge hopper above the thermal processor. Hot oil circulating through the troughs and screws heats the soil to 400 to 500 °F, removing contaminants. A second stage indirect heater is available to achieve 1,000 °F discharge temperatures. Soil is discharged from the thermal processor into a conditioner, where a water spray cools the soil and minimizes dust emissions.

A fan draws desorbed organics from the thermal processor through a fabric filter baghouse. Depending on contaminant characteristics, dust collected on the fabric filter may be retreated, combined with treated material, or drummed separately for off-site disposal. Exhaust gas from the fabric filter is drawn into an air-cooled condenser to remove most of the water vapor and organics. The gas is then passed through a second, refrigerated condenser and treated by carbon adsorption.

Condensate streams are typically treated in a three-phase, oil-water separator to remove light and heavy organic phases from the water phase. The water phase is then treated in a carbon adsorption system to remove residual organic contaminants. Treated condensate is often used

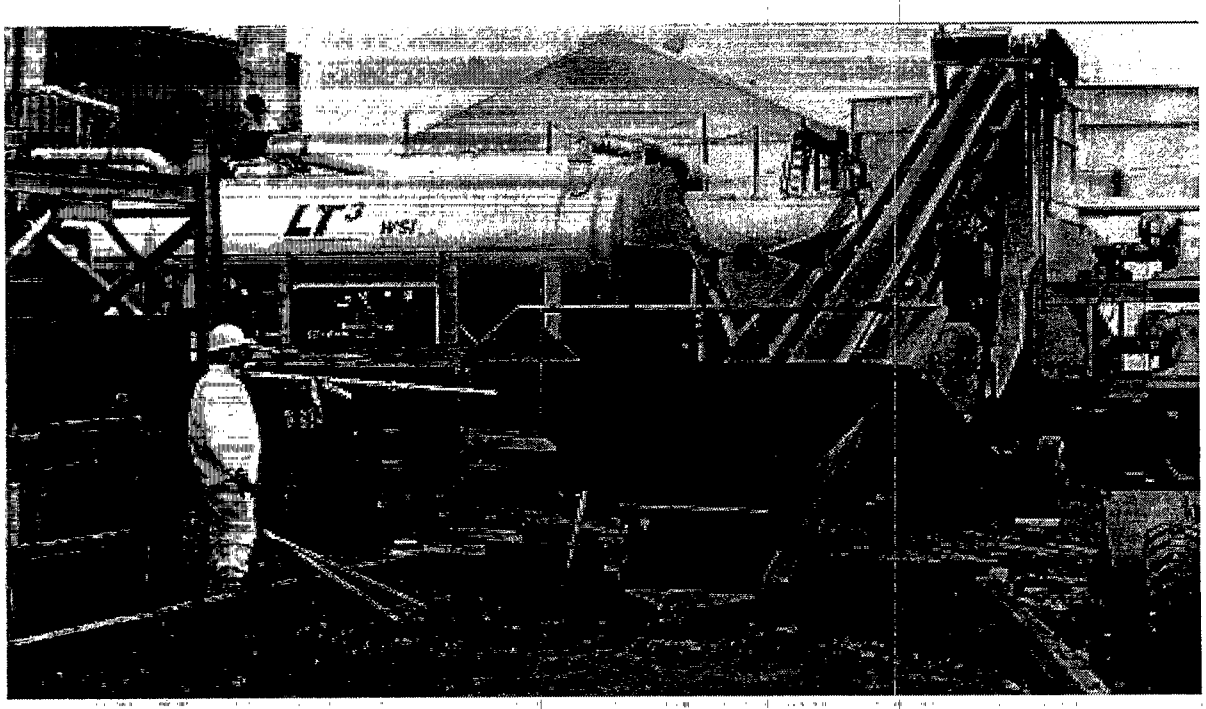

Low Temperature Thermal Treatment (LT³®) System

The SITE Program assesses but does not approve or endorse technologies.

for soil conditioning, and only the organic phases are disposed of off site.

WASTE APPLICABILITY:

This system treats soils and sludges contaminated with volatile and semivolatile organic compounds (VOC and SVOC). Bench-, pilot-, and full-scale LT³® systems have treated soil contaminated with the following wastes: coal tar, drill cuttings (oil-based mud), No. 2 diesel fuel, JP-4 jet fuel, leaded and unleaded gasoline, petroleum hydrocarbons, halogenated and nonhalogenated solvents, VOCs, SVOCs, polynuclear aromatic hydrocarbons, polychlorinated biphenyls, pesticides, herbicides, dioxins, and furans.

STATUS:

The LT³® system was accepted into the SITE Demonstration Program in September 1991. In November and December 1991, the LT³® system was demonstrated under the SITE Program as part of a proof-of-process test for full-scale remediation of the Anderson Development Company (ADC) Superfund site in Adrian, Michigan. The system was tested on lagoon sludge from the ADC site. This sludge was contaminated with VOCs and SVOCs, including 4,4-methylene bis(2-chloroaniline) (MBOCA).

The Demonstration Bulletin (EPA/540/MR-92/019) and Applications Analysis Report (EPA/540/AR-92/019) are available from EPA.

DEMONSTRATION RESULTS:

During the demonstration, the system throughput was approximately 2.1 tons per hour. Six replicate tests were conducted, each lasting approximately 6 hours. The SITE demonstration yielded the following results:

- The LT³® system removed VOCs to below method detection limits (less than 0.060 milligram per kilogram [mg/kg] for most compounds).
- The LT³® system achieved MBOCA removal efficiencies greater than 88 percent; MBOCA concentrations in the treated sludge ranged from 3.0 to 9.6 mg/kg.
- The LT³® system decreased the concentrations of all SVOCs in the sludge, with the exception of phenol, which increased possibly due to chlorobenzene.
- Dioxins and furans were formed in the system, but the 2,3,7,8-tetra-chlorodibenzo-p-dioxin isomer was not detected in treated sludges.
- Stack emissions of nonmethane total hydrocarbons increased from 6.7 to 11 parts per million by volume during the demonstration; the maximum emission rate was 0.2 pound per day (ppd). The maximum particulates emission rate was 0.02 ppd, and no chlorides were measured in stack gases.

The economic analysis of the LT³® system's performance compared the costs associated with treating soils containing 20, 45, and 75 percent moisture. The treatment costs per ton of material were estimated to be $37, $537, and $725, respectively.

FOR FURTHER INFORMATION:

EPA PROJECT MANAGER:
Paul dePercin
U.S. EPA
National Risk Management Research Laboratory
26 West Martin Luther King Avenue
Cincinnati, OH 45268
513-569-7797
Fax: 513-569-7105
E-Mail: dePercin.Paul@epamail.epa.gov

TECHNOLOGY DEVELOPER CONTACT:
Mike Cosmos
Roy F. Weston, Inc.
1400 Weston Way
West Chester, PA 19380-1499
610-701-7423
Fax: 610-701-5035
E-mail: cosmosm@mail.rfweston.com

The SITE Program assesses but does not approve or endorse technologies.

ROY F. WESTON, INC./IEG TECHNOLOGIES
(UVB - Vacuum Vaporizing Well)

TECHNOLOGY DESCRIPTION:

The Unterdruck-Verdampfer-Brunnen (UVB) system is an in situ system for remediating contaminated aquifers. The basic system is simple in design and operation, consisting of a well, a groundwater extraction pump, a negative pressure stripping reactor, and an electric blower. While in operation, the water level rises inside the UVB well casing due to reduced atmospheric pressure generated by the blower, increasing the total hydraulic head in the well. Atmospheric air enters the well through a fresh air pipe connected to the stripping reactor. The incoming fresh air forms bubbles as it jets through the pinhole plate of the stripping reactor and mixes with the influent groundwater in the well casing, creating an "air lift" effect as the bubbles rise and expand to the stripping reactor. After treatment, the movement of water out of the well develops a groundwater circulation cell around a remediation well. The circulating groundwater transports contaminants from the adjacent soils and groundwater to the well, where these contaminants are removed using a combination of physical, chemical and biological treatment processes. The technology is capable of mobilizing and treating contaminants that are water soluble (dissolved phase) or are present as dense non aqueous phase liquids (DNAPL) or light non aqueous phase liquids (LNAPL). The technology also can extract and treat soil gas from the unsaturated zone.

Due to the presence of a natural groundwater flow, the total amount of water circulating around the UVB well at any given time consists of (1) a portion of up gradient groundwatercaptured by the influent screen section, and (2) recirculated groundwater. This

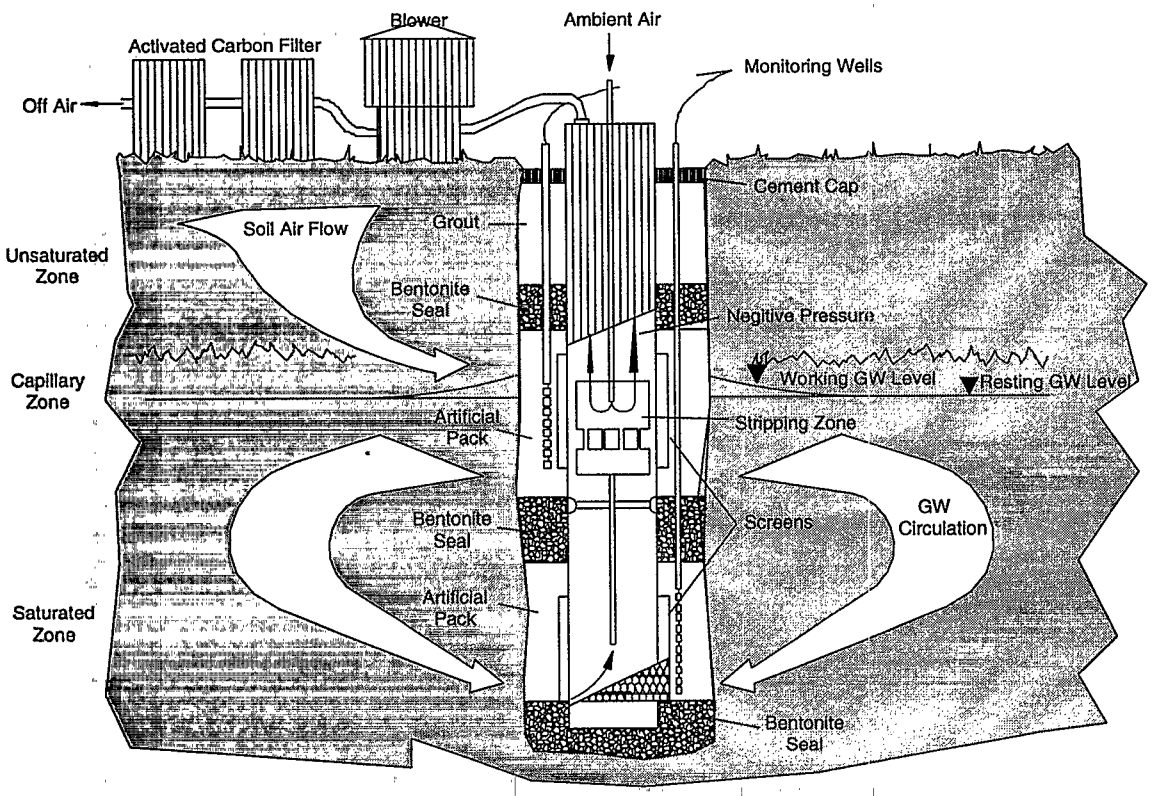

UVB Standard Circulation

The SITE Program assesses but does not approve or endorse technologies.

ratio is typically 15 to 85 percent respectively. Groundwater leaving the circulation cell exits through the downstream release zone in a rate equal to the up gradient groundwater being captured. These flow dynamics and the dimensions of the capture zone, circulation cell, and release zone can be calculated using design aids based on numerical simulations of the groundwater hydraulics and can be validated by monitoring the actual performance results of the system.

The advantage of the UVB technology over external pump-and-treat technologies is its ability to treat contaminants while maintaining a net equilibrium flow in the aquifer, eliminating adverse effects associated with excessive mounding or draw-down of groundwater due to continuous extraction and replacement of equal volumes of water. Additionally, the circulation well serves as a mechanism for flushing contaminants from the soils and aquifer to the well casing for treatment on a continuous basis. As a secondary benefit, because the primary treatment process is physical removal through air stripping, the dissolved oxygen levels in the groundwater passing through the well can theoretically increase up to 10 milligrams per liter within the aquifer, enhancing bioremediation by indigenous microorganisms.

WASTE APPLICABILITY:

This technology can be used to assist in treating a variety of soil and groundwater pollutants ranging from chlorinated solvents to gasoline constituents, polycyclic aromatic hydrocarbons, heavy metals, and nitrates.

STATUS:

This technology was accepted into the SITE Demonstration Program in 1993, and a demonstration was completed at March Air Force Base, California, in May 1994. The Demonstration Bulletin (EPA/540/MR-95/500), Technology Capsule (EPA/540/R-95/500a), and Innovative Technology Evaluation Report (EPA/540/R-95/005) will be available from EPAin the fall of 1999.

DEMONSTRATION RESULTS:

Demonstration results indicate that the UVB system reduced trichloroethene (TCE) in groundwater by an average of 94 percent. The average TCE concentration from the outlet of the UVB system in the treated groundwater was approximately 3 micrograms per liter (μg/L), with only one event above 5 μg/L. The inlet TCE concentration averaged 40 μg/L. Results of a dye tracer study indicated that the radius of the circulation cell was at least 40 feet. Modeling of the study indicated a circulation cell radius of 60 feet. In general, TCE in the shallow and intermediate screened wells showed a concentration reduction both vertically and horizontally during the demonstration. TCE concentrations in these wells appeared to homogenize as indicated by their convergence and stabilization. Variations in TCE concentrations were noted in the deep screened wells.

FOR FURTHER INFORMATION:

EPA PROJECT MANAGER:
Michelle Simon
U.S. EPA
National Risk Management Research Laboratory
26 West Martin Luther King Drive
Cincinnati, OH 45268
513-569-7469
Fax: 513-569-7676

TECHNOLOGY DEVELOPER CONTACTS:

Mike Cosmos, Roy F. Weston, Inc.
One Weston Way
West Chester, PA 19380
610-701-7423
Fax: 610-701-5035
E-mail: cosmosm@mail.rfweston.com

Mike Corbin
One Weston Way
West Chester, PA 19380
610-701-3723
Fax: 610-701-7597

The SITE Program assesses but does not approve or endorse technologies.

WHEELABRATOR CLEAN AIR SYSTEMS, INC.
(formerly CHEMICAL WASTE MANAGEMENT, INC.)
(PO*WW*ER™ Technology)

TECHNOLOGY DESCRIPTION:

The PO*WW*ER™ technology is used to treat and reduce complex industrial and hazardous wastewaters containing mixtures of inorganic salts, metals, volatile and nonvolatile organics, volatile inorganics, and radionuclides. The proprietary technology combines evaporation with catalytic oxidation to concentrate and destroy contaminants, producing a high-quality product condensate.

Wastewater is first pumped into an evaporator, where most of the water and contaminants are vaporized and removed, concentrating the contaminants into a small volume for further treatment or disposal. The contaminant vapors then pass over a bed of proprietary robust catalyst, where the pollutants are oxidized and destroyed. Depending on the contaminant vapor composition, effluent vapors from the oxidizer may be treated in a scrubber. The vapors are then condensed to produce water (condensate) that can be used as either boiler or cooling tower makeup water, if appropriate. Hazardous wastewater can thus be separated into a small contaminant stream (brine) and a large clean water stream without using expensive reagents or increasing the volume of the total stream. The photograph below illustrates a PO*WW*ER™ -based wastewater treatment plant.

WASTE APPLICABILITY:

The PO*WW*ER™ technology can treat wastewaters containing a mixture of the following contaminants:

Organic	Inorganic	Radioactive
• Halogenated volatiles • Halogenated semivolatiles • Nonhalogenated volatiles • Nonhalogenated semi-volatiles • Organic pesticides/ herbicides • Solvents • Benzene, toluene, ethyl-benzene, and xylene • Organic cyanides • Nonvolatile organics	• Heavy metals • Nonmetallic toxic elements • Cyanides • Ammonia • Nitrates • Salts	• Plutonium • Americium • Uranium • Technetium • Thorium • Radium • Barium

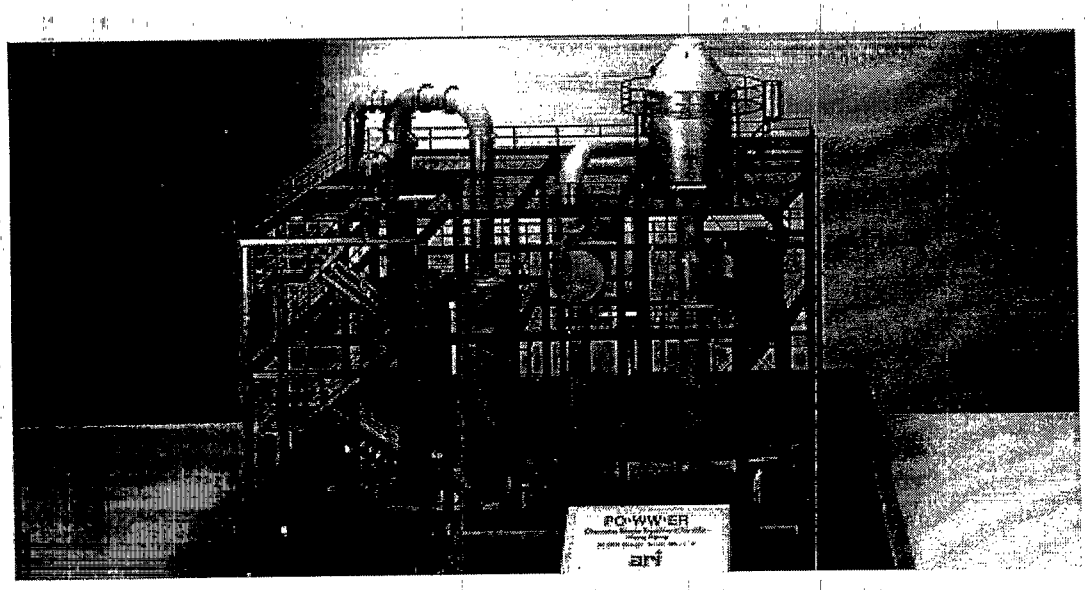

PO*WW*ER™-Based Wastewater Treatment Plant

The SITE Program assesses but does not approve or endorse technologies.

Suitable wastewaters for treatment by the PO*WW*ER™ technology include landfill leachates, contaminated groundwaters, process wastewaters, and low-level radioactive mixed wastes.

STATUS:

The technology was accepted into the SITE Demonstration Program in 1991. The demonstration took place in September 1992 at the Chemical Waste Management, Inc., Lake Charles, Louisiana, facility. Landfill leachate, an F039 hazardous waste, was treated in a pilot-scale unit. The Applications Analysis Report (EPA/540/AR-93/506) and Technology Evaluation Report (EPA/540/R93/506) are available from EPA.

A commercial system with a capacity of 50 gallons per minute is in operation at Ysing Yi Island, Hong Kong. A pilot-scale unit, with a capacity of 1 to 1.5 gallons per minute, is available and can treat radioactive, hazardous, and mixed waste streams.

DEMONSTRATION RESULTS:

The ability of the PO*WW*ER™ system to concentrate aqueous wastes was evaluated by measuring the volume reduction and concentration ratio achieved. The volume of brine produced during each 9-hour test period was about 5 percent of the feed waste volume processed in the same period. The concentration ratio, defined as the ratio of total solids (TS) concentration in the brine to the TS concentration in the feed waste, was about 32 to 1.

The feed waste contained concentrations of volatile organic compounds (VOC) ranging from 320 to 110,000 micrograms per liter (μg/L); semivolatile organic compounds (SVOC) ranging from 5,300 to 24,000 μg/L; ammonia ranging from 140 to 160 milligrams per liter (mg/L); and cyanide ranging from 24 to 36 mg/L. No VOCs, SVOCs, ammonia, or cyanide were detected in the product condensate.

The PO*WW*ER™ system removed sources of feed waste toxicity. The feed waste was acutely toxic with median lethal concentrations (LC_{50}) consistently below 10 percent. The product condensate was nontoxic with LC_{50} values consistently greater than 100 percent, but only after the product condensate was cooled and its pH, dissolved oxygen level, and hardness or salinity were increased.

FOR FURTHER INFORMATION:

EPA PROJECT MANAGER:
Randy Parker
U.S. EPA
National Risk Management Research Laboratory
26 West Martin Luther King Drive
Cincinnati, OH 45268
513-569-7271
Fax: 513-569-7571

TECHNOLOGY DEVELOPER CONTACT:
Myron Reicher
Wheelabrator Clean Air Systems, Inc.
1501 East Woodfield Road,
Suite 200 West
Schaumberg, IL 60173
847-706-6900
Fax: 847-706-6996

The SITE Program assesses but does not approve or endorse technologies.

XEROX CORPORATION
(2-PHASE™ EXTRACTION Process)

TECHNOLOGY DESCRIPTION:

The 2-PHASE™ EXTRACTION Process was developed as an alternative to conventional pump-and-treat technology, particularly in low conductivity formations such as silts and clays that are impacted by volatile organic compounds (VOC). 2-PHASE™ EXTRACTION uses a high-vacuum source applied to an extraction tube within a water well to increase groundwater removal rates (consequently the dissolved phase of contamination) and to volatilize and extract that portion of contaminant from the sorbed or free product phases. Vacuum lift of water is not a limiting factor in the application of the technology. Since a mixed vapor-liquid column is extracted from the well, the 2-PHASE™ EXTRACTION technology allows a single piece of equipment (a high vacuum source) to remove contaminants in both the liquid and vapor phases.

To extract both groundwater and soil vapor from a single extraction well, the 2-PHASE™ EXTRACTION process uses a vacuum pump to apply a high vacuum (generally 18 to 29 inches of mercury) through a central extraction tube, which extends down the well. Soil vapor drawn into the well by the vacuum provides for a high velocity vapor stream at the bottom tip of the extraction tube, which entrains the contaminated groundwater and lifts it to ground surface. As groundwater moves through the extraction system, as much as 95 percent of the VOCs in the water phase are transferred to the vapor phase. The vapor and water phases are then separated at the surface in a separator tank. The water phase requires only carbon polishing prior to discharge, provided that the compounds are adsorbable. With some compounds the water carbon treatment can be eliminated. The vapor phase is subjected to carbon treatment, bioremediation, resin regeneration, catalytic oxidation, or other vapor phase treatment (based on contaminant characteristics, mass loadings, and economics) prior to release to atmosphere.

A kick-start system can induce flow and help dewater the well. The flow of atmospheric air can be regulated by adjustment of the gate valve to: (1) optimize the air-to-water flow ratio to

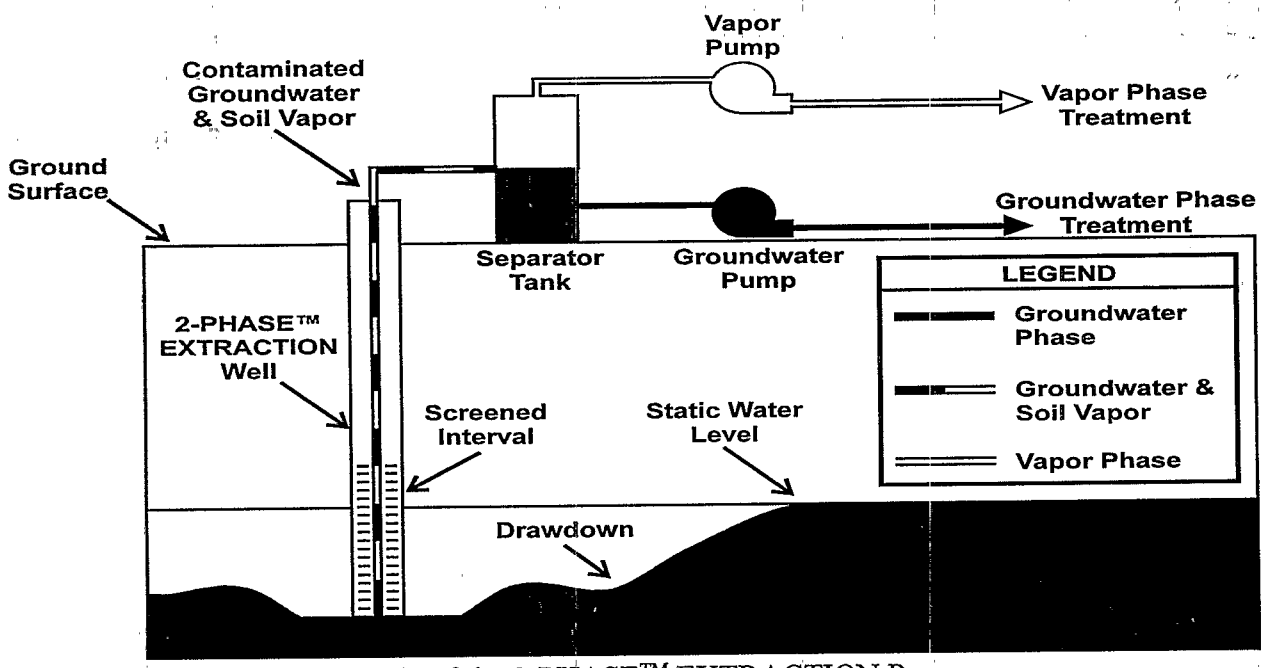

Schematic of the 2-PHASE™ EXTRACTION Process

The SITE Program assesses but does not approve or endorse technologies.

minimize water "slug" production at startup (the term slug refers to an irregular pulsation of water through the extraction tube which indicates irregular water flow); (2) maximize tube penetration into the saturated zone; and (3) maximize the groundwater flow rate by optimizing the applied vacuum to the well's annular space.

Recent technology improvements include a well design that allows for contaminant removal from desired vertical zones within the subsurface. By providing a means to manipulate preferential flow, this innovative well design provides the ability to focus contaminant extraction at shallow zones and deep zones within the same well which results in a thorough removal of contaminants from the impacted area. Xerox and Licensee experience with 2-PHASE™ EXTRACTION typically has shown a reduction in remediation time by 1 to 2 orders of magnitude over conventional pump and treat/soil vapor extraction.

WASTE APPLICABILITY:

2-PHASE™ EXTRACTION has been successfully demonstrated for the removal of total petroleum hydrocarbons and chlorinated hydrocarbons from groundwater and soils.

STATUS:

The Xerox 2-PHASE™ EXTRACTION process was accepted into the SITE Demonstration Program in summer 1994. The demonstration began in August 1994 at a contaminated groundwater site at McClellan Air Force Base in Sacramento, California, and was completed in February 1995. Reports of the demonstration are available from EPA.

The Xerox 2-PHASE™ EXTRACTION received eight patents from 1991-1998 and several patents are pending. The technology is available under license and is used extensively in the United States, Canada, South America, Great Britain, and Europe.

DEMONSTRATION RESULTS:

Results from the demonstration are detailed below:

- The total contaminant (trichloroethene, tetrachloroethene, Freon 133™) mass removal during the 6-month demonstration was estimated at 1,600 pounds, of which 99.7 percent was extracted from the vapor phase.
- The system extracted 1.4 million gallons of groundwater and 24.4 million cubic feet of soil vapor.
- The radius of capture in the groundwater extended from 100 to 300 feet from the extraction well. The radius of influence in the vadose zone extended 200 feet from the extraction well.
- The estimated cost of using the process was $28 per pound compared to an estimated $1370 per pound for a conventional pump and treat system.

FOR FURTHER INFORMATION:

EPA PROJECT MANAGER:
Paul dePercin, U.S. EPA
National Risk Management Research Laboratory
26 West Martin Luther King Drive
Cincinnati, OH 45268
513-569-7797, Fax: 513-569-7105
E-Mail: dePercin.Paul@epamail.epa.gov

TECHNOLOGY DEVELOPER CONTACT:
Ron Hess, Xerox Corporation
800 Phillips Road
Building 304-13S
Webster, NY 14580
716-422-3694, Fax: 716-265-7088
E-mail: ronald hess@wb.xerox
Web Site: www.xerox.com/ehs/remed.html

TECHNOLOGY USER CONTACT:
Phil Mook, SM-ALC/EMR
5050 Dudley Boulevard, Suite 3
McClellan AFB, CA 95652-1389
916-643-5443, Fax: 916-643-0827
E-mail: mook.phil@sma1.mcclellan.af.mil

The SITE Program assesses but does not approve or endorse technologies.

ZENON ENVIRONMENTAL INC.
(Cross-Flow Pervaporation System)

TECHNOLOGY DESCRIPTION:

The ZENON Environmental Inc. (ZENON), cross-flow pervaporation technology is a membrane-based process that removes volatile organic compounds (VOC) from aqueous matrices. The technology uses an organophilic membrane made of nonporous silicone rubber, which is permeable to organic compounds, and highly resistant to degradation.

In a typical field application, contaminated water is pumped from an equalization tank through a prefilter to remove debris and silt particles, and then into a heat exchanger that raises the water temperature to about 165°F (75°C). The heated water then flows into a pervaporation module containing the organophilic membranes. The composition of the membranes causes organics in solution to adsorb to them. A vacuum applied to the system causes the organics to diffuse through the membranes and move out of the pervaporation module. This material is then passed through a condenser generating a highly concentrated liquid called permeate. Treated water exits the pervaporation module and is discharged from the system. The permeate separates into aqueous and organic phases. Aqueous phase permeate is sent back to the pervaporation module for further treatment, while the organic phase permeate is discharged to a receiving vessel.

Because emissions are vented from the system downstream of the condenser, organics are kept in solution, thus minimizing air releases. The condensed organic materials represent only a small fraction of the initial wastewater volume and may be subsequently disposed of at significant cost savings. This process may also treat industrial waste streams and recover organics for later use.

WASTE APPLICABILITY:

Pervaporation can be applied to aqueous waste streams such as groundwater, lagoons, leachate, and rinse waters that are contaminated with VOCs such as solvents, degreasers, and gasoline. The technology is applicable to the types of aqueous wastes treated by carbon adsorption, air stripping, and steam stripping.

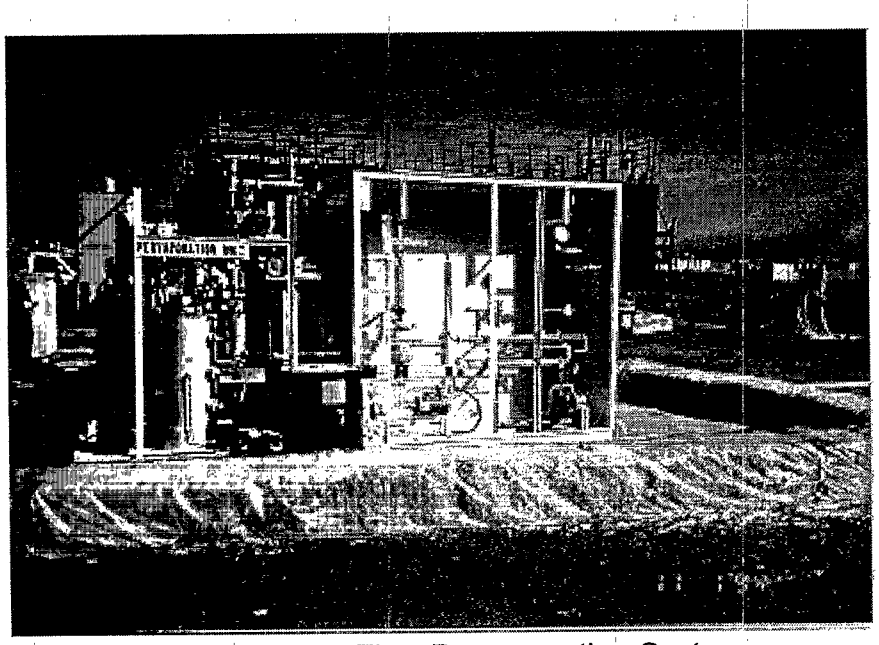

ZENON Cross-Flow Pervaporation System

The SITE Program assesses but does not approve or endorse technologies.

STATUS:

This technology was accepted into the SITE Emerging Technology Program (ETP) in January 1989. The Emerging Technology Report (EPA/540/F-93/503), which details results from the ETP evaluation, is available from EPA. Based on results from the ETP, ZENON was invited to demonstrate the technology in the SITE Demonstration Program. A pilot-scale pervaporation system, built by ZENON for Environment Canada's Emergencies Engineering Division, was tested over a 2-year period (see photograph on previous page). During the second year, testing was carried out over several months at a petroleum hydrocarbon-contaminated site in Ontario, Canada.

A full-scale SITE demonstration took place in February 1995 at a former waste disposal area at Naval Air Station North Island in San Diego, California. The demonstration was conducted as a cooperative effort among EPA, ZENON, the Naval Environmental Leadership Program, Environment Canada, and the Ontario Ministry of Environment and Energy.

Organics were the primary groundwater contaminant at the site, and trichloroethene (TCE) was selected as the contaminant of concern for the demonstration. The Demonstration Bulletin (EPA/540/MR-95/511) and Demonstration Capsule (EPA/540/R-95/511a) are available from EPA.

DEMONSTRATION RESULTS:

Analysis of demonstration samples indicate that the ZENON pervaporation system was about 98 percent effective in removing TCE from groundwater. The system achieved this removal efficiency with TCE influent concentrations of up to 250 parts per million at a flow rate of 10 gallons per minute (gpm) or less. Treatment efficiency remained fairly consistent throughout the demonstration; however, the treatment efficiency decreased at various times due to mineral scaling problems.

FOR FURTHER INFORMATION:

EPA PROJECT MANAGER:
Ronald Turner
U.S. EPA
National Risk Management Research Laboratory
26 West Martin Luther King Drive
Cincinnati, OH 45268
513-569-7775
Fax: 513-569-7676

TECHNOLOGY DEVELOPER CONTACT:
Chris Lipski
ZENON Environmental Inc.
845 Harrington Court
Burlington, Ontario, Canada
L7N 3P3
905-639-6320
Fax: 905-639-1812

The SITE Program assesses but does not approve or endorse technologies.

ZENON ENVIRONMENTAL INC.
(ZenoGem™ Process)

TECHNOLOGY DESCRIPTION:

ZENON Environmental Inc.'s, ZenoGem™ Process integrates biological treatment with membrane-based ultrafiltration (see figure below). This innovative system treats high strength wastes at long sludge retention time but short hydraulic residence time. As a result, the bioreactor's size is significantly reduced. Membrane filtration reduces the turbidity of the treated wastewater to less than 1 nephelometric turbidity unit.

In the ZenoGem™ Process, wastewater contaminated with organic compounds first enters the bioreactor, where contaminants are biologically degraded. Next, the process pump circulates the biomass through the ultrafiltration membrane system, or ultrafilter. The ultrafilter separates treated water from biological solids and soluble materials with higher molecular weights, including emulsified oil. The solids and soluble materials are then recycled to the bioreactor. The ZenoGem™ Process captures higher molecular weight materials that would otherwise pass through conventional clarifiers and filters. The ZenoGem™ Process pilot-scale system is mounted on a 48-foot trailer and consists of the following six major components:

- Polyethylene equalization/holding tank: reduces the normal flow concentration fluctuations in the system
- Polyethylene bioreactor tank: contains the bacterial culture that degrades organic contaminants
- Process and feed pumps: ensures proper flow and pressure for optimum system performance
- Ultrafiltration module: contains rugged, clog-free, tubular membranes that remove solids from treated water
- Clean-in-place tank: includes all the necessary valves, instrumentation, and controls to clean the membrane filters

ZenoGem™ Process

The SITE Program assesses but does not approve or endorse technologies.

- Control panel and computer: monitors system performance

The treatment capacity of the pilot-scale, trailer-mounted system is about 500 to 1,000 gallons of wastewater per day; however, a full-scale system can treat much larger quantities of wastewater. The trailer is also equipped with a laboratory that enables field personnel to conduct tests to evaluate system performance. The system is computer-controlled and equipped with alarms to notify the operator of mechanical and operational problems.

WASTE APPLICABILITY:

The ZenoGem™ Process is designed to remove biodegradable materials, including most organic contaminants, from wastewater to produce a high quality effluent. The process consistently nitrifies organics and can denitrify organics with the addition of an anoxic bioreactor. The process is limited to aqueous media and may be used to treat high strength leachates, contaminated groundwater, and soil washing effluent.

STATUS:

The ZenoGem™ Process was accepted into the SITE Demonstration Program in summer 1992. The ZenoGem™ Process was demonstrated at the Nascolite Superfund site in Millville, New Jersey, from September through November 1994. Groundwater at this 17.5-acre site is contaminated with methyl methacrylate (MMA) and other volatile organic compounds from manufacturing polymethyl methacrylate plastic sheets, commonly known as Plexiglas. The Demonstration Bulletin (EPA/540/MR-95/503) and Technology Capsule (EPA/540/R-95/503a) are available from EPA. The Innovative Technology Evaluation Report is available from EPA.

Since the development of the ZenoGem™ technology in 1987, ZENON has performed pilot tests for government and private clients on several different types of wastewater, including oily wastewater, metal finishing wastes, cleaning solutions containing detergents, alcohol-based cleaning solutions, landfill leachate, aqueous paint-stripping wastes, and deicing fluids. Information about the two demonstrations conducted in Canada and the United States is available from ZENON.

DEMONSTRATION RESULTS:

During the 3-month demonstration, sampling results showed that the system achieved average removal efficiencies of greater than 99.9 percent for MMA and 97.9 percent for chemical oxygen demand. MMA concentrations measured in the off-gas emission stream indicated insignificant volatilization. The ultrafiltration system effectively dewatered the process sludge, which yielded a smaller waste volume for off-site disposal. Sludge dewatering resulted in an approximate volume reduction of 60 percent and a solids increase from 1.6 to 3.6 percent. The process effluent was clear and odorless, and accepted for discharge by the local publicly owned treatment works. During the demonstration, the system was left unattended at night and on weekends, demonstrating that computer control is practical for extended operating periods.

FOR FURTHER INFORMATION:

EPA PROJECT MANAGER:
Daniel Sullivan
U.S. EPA
National Risk Management Research Laboratory
2890 Woodbridge Avenue
Edison, NJ 08837-3679
908-321-6677
Fax: 908-321-6640

TECHNOLOGY DEVELOPER CONTACT:
Chris Lipski
ZENON Environmental Inc.
845 Harrington Court
Burlington, Ontario, Canada
L7N 3P3
905-639-6320
Fax: 905-639-1812

The SITE Program assesses but does not approve or endorse technologies.

TABLE 2
Ongoing SITE Demonstration Program Projects as of October 1998

Developer	Technology	Technology Contact	EPA Project Manager	Applicable Media	Applicable Waste	
					Inorganic	Organic
Arctic Foundations Inc., Anchorage, AK	Cryogenic Barrier	Ed Yarmak 907-562-2741	Steven Rock 513-569-7149	Soil	Nonspecific Inorganics	Nonspecific Organics
Duke Engineering and Services, Inc., Austin, TX	Surfactant Enhanced Aquifer Remediation of Nonaqueous Phase Liquids	Dick Jackson John Landergam 512-425-2000	Thomas Holdsworth 513-569-7675	Groundwater	Not Applicable	Nonspecific Organics
EnviroMetal Technologies, Inc., Guelph, Ontario, Canada	Reactive Barrier	John Vogan 519-824-0432	Ed Barth 513-569-7669	Groundwater Wastewater	Metals	VOCs
Geokinetics International, Inc., Berkeley, CA	Electroheat-Enhanced Nonaquious-Phase Liquids Removal	Stephan R. Clark 510-704-2941	Thomas Holdsworth 513-569-7675	Clay, Silty Clay, Shale Beds, Gravel Deposits, etc.	Not Applicable	Feul Oil, Diesel, Kerosene, PAHs, Coal Tar, Hydraulic Fluid, TCE
ITT Night Vision, Roanoke, VA	In-situ Enhanced Bioremediation of Groundwater	Brian B. Looney 803-725-3692	Vicente Gallardo 513-569-7176	Groundwater	Not Applicable	VOCs
KSE, Inc., Amherst, MA	Adsorption-Integrated-Reaction Process	J.R. Kittrell 413-549-5506	Vince Gallardo 513-569-7176	Air Streams	Not Applicable	VOCs
Lasagna Public-Private Partnership, Cincinnati, OH	Lasagna In Situ Soil Remediation	Michael Roulier 513-569-7796 Sa Ho 314-694-5179	Ronald Turner or Michelle Simon 513-569-7775 or 513-569-7469	Groundwater, Soils	Nonspecific Inorganics	Nonspecific Organics
MacTec-SPB Technologies Company, (formally EG&G Environmental, Inc.), Pittsburgh, PA	No VOCs™ In-Well Stripping Technology	Mark McGlathery 303-278-3100	Michelle Simon 513-569-7469	Groundwater	Soluble Metals	BTEX, TCE, DCE, PAHs, Alcohols, Ketones
Matrix Photocatalytic Inc.,*** London, Ontario, Canada	Photocatalytic Air Treatment	Bob Henderson 519-660-8669	Richard Eilers 513-569-7809	Air	Not Applicable	VOCs, SVOCs
National Risk Management Research Laboratory, Cincinnati, OH	Bioventing	Paul McCauley 513-569-7444	Jack Hubbard 513-569-7507	Soil	Not Applicable	Nonspecific Organics
Phytokinetics, Inc., North Logan, UT	Phytoremediation Process	Ari Ferro 801-750-0985 801-755-0891	Steven Rock 513-569-7149	Soil, Sediment, Groundwater	Not Applicable	Nonspecific Organics

TABLE 2 (Continued)
Ongoing SITE Demonstration Program Projects as of October 1998

Developer	Technology	Technology Contact	EPA Project Manager	Applicable Media	Applicable Waste	
					Inorganic	Organic
Phytotech, Monmouth Junction, NJ	Phytoremediation Technology	Michael Blaylock or Eric Muhr 732-438-0900	Steven Rock 513-569-7149	Soil, Groundwater, Sediment	Heavy Metals, Radionuclides	Not Applicable
Pintail Systems Incorporated, Aurora, CO	Spent Ore Bioremediation Process	Leslie Thompson 303-367-8443	Jack Hubbard 513-569-7507	Spent Ore, Waste Rock, Mine Tailings, Mining Process Water	Cyanide	Not Applicable
Praxis Environmental Technologies, Inc., Burlingame, CA	In Situ Thermal Extraction Process	Lloyd Stewart 650-548-9288 Major Paul B. Devan 850-283-6288	Paul dePercin 513-569-7797	Soil, Groundwater	Not Applicable	VOCs and SVOCs, Hydrocarbons, Solvents
Process Technologies, Inc., Boise, ID	Photolytic Destruction of Vapor-Phase Halogens	Mike Swan 208-385-0900 Kevin Wong 916-643-0830	Paul dePercin 513-569-7797	Air, Gases	Not Applicable	VOCs, CFCs, HCFCs
Recycling Sciences International, Inc., Chicago, IL	Desorption and Vapor Extraction System	William Meenan 312-663-4269	Richard Eilers 513-569-7809	Soil, Sediment, Sludge	Volatile Inorganics	VOCs, SVOCs, PCBs, PAHs, PCP, Pesticides
Rocky Mountian Remediation Services, LCC Golden, CO	ENVIROBOND™ Solution	James Barthel 303-215-6620	Ed Barth 513-522-0742	Soil, Waste Streams, Other Media	Lead, Heavy metals	Not Applicable
Sandia National Laboratories, Albuquerque, NM	In Situ Electrokinetic Extraction System	Eric Lindgren 505-844-3820 Earl Mattson 505-856-3311	Randy Parker 513-569-7271	Soil	Anionic Heavy Metals, Hexavalent Chromium	Not Applicable
Selentec Environmental Technologies, Inc., Atlanta, GA	Selentec MAG*SEP℠ Technology	Steve Weldon 770-640-7059	Randy Parker 513-569-7271	Water, Wastewater	Heavy Metals, Radionuclides	Not Applicable
Sevenson Environmental Services, Inc., Munster, IN	MAECTITE® Chemical Treatment Process	Charles McPheeters 219-836-0116	Jack Hubbard 513-569-7507	Soil, Sludge, Sediment, Solids	Lead, Other Heavy Metals	Not Applicable

TABLE 2 (Continued)
Ongoing SITE Demonstration Program Projects as of October 1998

Developer	Technology	Technology Contact	EPA Project Manager	Applicable Media	Applicable Waste	
					Inorganic	Organic
SIVE Services, Dixon, CA	Steam Injection and Vacuum Extraction	Douglas Dieter 916-678-8358	Michelle Simon 513-569-7469	Soil	Not Applicable	VOCs, SVOCs
Star Organics, LCC, Dallas TX	Soil Rescue Remediation Fluid	Phil G. Clarke 214-522-0742	Ed Barth 513-569-7669	Soil	Lead, Other Heavy Metals	Not Applicable
U.S. Air Force, Wright Patterson Air Force Base, OH	Phytoremediation of TCE-Contaminated Shallow Groundwater	Greg Harvey 513-255-7716, ext. 302	Steven Rock 513-569-7149	Groundwater, Soil	Not Applicable	TCE, Petroleum, Munitions, Halogenated Hydrocarbons
Vortec Corporation,*** Collegeville, PA	Oxidation and Vitrification Process	James Hnat 610-489-2255	Teri Richardson 513-569-7949	Soil, Sludge, Sediment	Metals, Other Nonspecific Inorganics	Nonspecific Organics

Notes:

** An additional demonstration is planned for this technology. Refer to the profile in the Demonstration Program section (completed projects) for more information.

*** From Emerging Technology Program

Page Intentionally Left Blank

ARCTIC FOUNDATIONS, INC.
(Cryogenic Barrier)

TECHNOLOGY DESCRIPTION:

Long-term containment and immobilization of hazardous wastes using ground freezing technology is a relatively new field, even though ground freezing has been used as a temporary construction aid for several years. Ground freezing is ideally suited to control waterborne pollutants, since changing water from a liquid to a solid has an obvious immobilizing effect. The challenge for conventional ground freezing technologies is to be technically and economically viable in the long-term. Arctic Foundations, Inc. (AFI), has developed a ground freezing technology that can be used as a temporary or permanent, long-term solution for containing and immobilizing hazardous wastes. Buried hazardous waste may be totally confined by surrounding it with a frozen barrier. A frozen barrier is created by reducing the ground temperature around the waste to the appropriate freezing temperature and subsequently freezing the intervening waste. Artificial injection of water is usually unnecessary since moisture is present in sufficient quantities in most soils. The ground freezing process is naturally suited to controlling hazardous waste because in-ground moisture is transformed from serving as a potential waste mobilizing agent to serving as a protective agent.

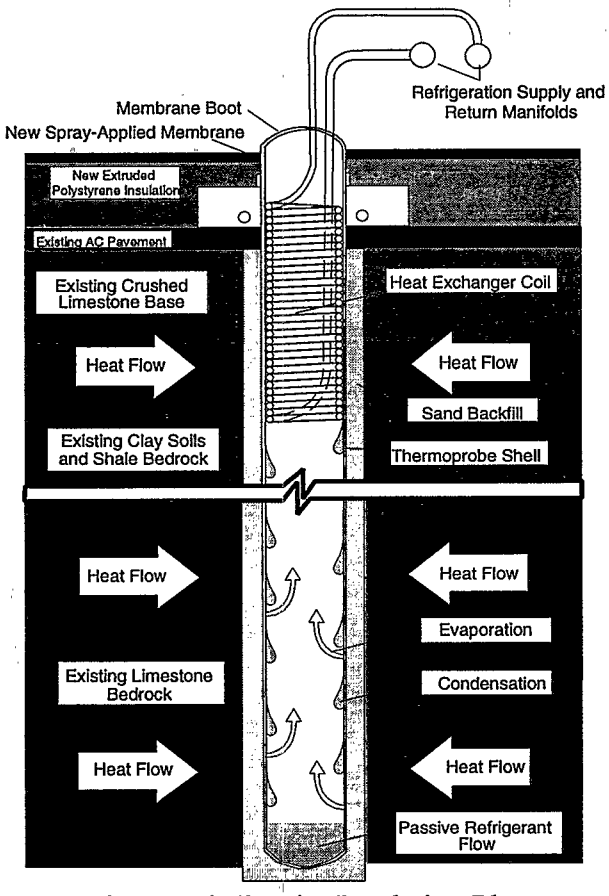

Cryogenic Barrier Insulation Plan

The SITE Program assesses but does not approve or endorse technologies.

A typical containment system consists of multiple thermoprobes, an active (powered) condenser, an interconnecting piping system, a two-phase working fluid, and a control system. The thermoprobes (AFI's heat removal devices) and piping are inserted into the soil at strategic locations around and sometimes underneath the waste source depending on the presence or absence of a confining layer. Two-phase working fluid circulates through the piping and reduces the temperature of the surrounding soil, creating a frozen barrier around the waste source. The thermoprobes may be installed in any position and spacing to create a frozen barrier wall of almost any required shape and size. The selection of working fluids depends on the specific waste application, site conditions, and desired soil temperatures, and may consist of freon, butane, propane, carbon dioxide, or ammonia.

WASTE APPLICABILITY:

The cryogenic barrier can provide subsurface containment for a variety of sites and wastes, including the following: underground storage tanks; nuclear waste sites; plume control; burial trenches, pits, and ponds; in situ waste treatment areas; chemically contaminated sites; and spent fuel storage ponds. The barrier is adaptable to any geometry; drilling technology presents the only constraint.

STATUS:

The AFI cryogenic barrier system was accepted into the SITE Demonstration Program in 1996. The demonstration was conducted over a 5-month period at the U.S. Department of Energy's Oak Ridge National Laboratory (ORNL) in Oak Ridge, Tennessee in 1998. The demonstration was conducted to evaluate the barrier's ability to contain radionuclides from the ORNL Waste Area Grouping 9 Homogeneous Reactor Experiment pond. The system's effectiveness was evaluated through the performance of a groundwater dye tracing investigation. The demonstration was conducted in two phases. Phase one included a background study that was conducted to determine the presence of natural fluorescence and existing dyes in groundwater at the site in order to select a nondetectable dye for use during the dye tracing investigation.

During phase two, the selected dye, Acid Red No. 92, was injected into a standpipe located within the confines of the frozen barrier. Water samples and charcoal packets were then collected at predetermined sampling points outside the barrier wall to determine the presence or absence of dye in groundwater, springs, or seeps. The evaluation of the technology under the SITE Program was completed in July 1998. Preliminary results from the evaluation will be available in early 1999.

FOR FURTHER INFORMATION:

EPA PROJECT MANAGER:
Steven Rock
U.S. EPA
National Risk Management Research Laboratory
26 West Martin Luther King Drive
Cincinnati, OH 45268
513-569-7149
Fax: 513-569-7105

TECHNOLOGY DEVELOPER CONTACT:
Ed Yarmak
Arctic Foundations, Inc.
5621 Arctic Blvd.
Anchorage, AK 99518
907-562-2741
Fax: 907-562-0153

The SITE Program assesses but does not approve or endorse technologies.

DUKE ENGINEERING AND SERVICES, INC.
(Surfactant Enhanced Aquifer Remediation of Nonaqueous Phase Liquids)

TECHNOLOGY DESCRIPTION:

Surfactant enhanced aquifer remediation (SEAR) technology greatly enhances the removal of residual nonaqueous phase liquids (NAPL) from the subsurface by increasing the solubility of the NAPL and lowering the interfacial tension between the NAPL and aqueous surfactant solution. Increasing the solubility of the NAPL with surfactants substantially enhances the removal of the NAPL mass through pumping. Lowering the interfacial tension between the NAPL and the aqueous surfactant solution reduces the capillary forces that trap the NAPL in the pore spaces of the aquifer. Under certain conditions, the interfacial tension can be lowered sufficiently to drain NAPL from the pore spaces thereby forming an oil bank in the subsurface, which is then recovered at extraction wells.

Before SEAR technology can be implemented, site specific characteristics must be determined. Normal aquifer properties such as stratigraphy, grain size distribution, mineralogy, hydraulic conductivity, vertical and horizontal gradients, depth to ground water, etc., are determined. In addition, a fundamental understanding of the NAPL composition, distribution, and quantity in the subsurface is required. Knowledge of the quantity of NAPL present prior to using SEAR prevents either under- or over-designing the surfactant flood. Laboratory experiments using soil core, contaminant, groundwater, and source water from the site are conducted to determine the optimum surfactant solution mix. A geosystem model is then developed which incorporates all the data gathered. Simulations are run to determine optimum injection and extraction well placement, percent recoveries of

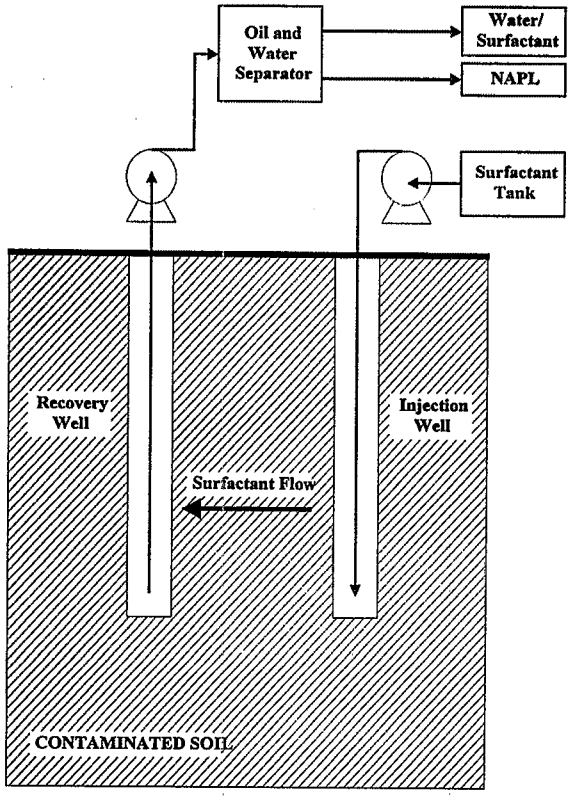

SEAR Technology

The SITE Program assesses but does not approve or endorse technologies.

the compounds injected, contaminant concentration levels in the effluent, percent removal of the contaminant mass, and all other pertinent results of the surfactant flood.

Once the surfactant flood has been fully designed, the surfactant solution is injected into the contaminated zone in the subsurface through one or more wells. The surfactant is drawn through the subsurface by pumping at surrounding extraction wells. As the surfactant moves through the subsurface it solubilizes or, if the design calls for it, mobilizes the NAPL for recovery at the extraction wells. The recovered groundwater and NAPL are then typically sent to a phase separator. The recovered NAPL is either disposed of or recycled, and the groundwater and surfactant is treated. For large scale projects, recovery and reuse of the surfactant from the effluent stream is economical.

WASTE APPLICABILITY:

SEAR technology is applicable for the rapid removal of residual phase NAPL in the subsurface. Although it does not directly remediate the dissolved phase plume, removal of the source zone contamination can greatly reduce long term liability and risk. SEAR technology can be effective for the removal of a broad range of organic contaminants. This technology may not be suitable for sites with low hydraulic permeabilities (10^{-5} cm/sec or less).

STATUS:

SEAR technology was accepted into the Superfund Innovative Technology Evaluation (SITE) Demonstration program in 1997. The technology is scheduled for demonstration at the end of November 1998 at the Pearl Harbor demonstration site in Oahu, Hawaii.

SEAR technology has been successfully demonstrated with three separate surfactant floods at a U.S. Air Force base containing chlorinated solvent contamination in an alluvial aquifer.

FOR FURTHER INFORMATION:

EPA PROJECT MANAGER:
Tom Holdsworth
U.S. EPA
National Risk Management Research Laboratory
26 West Martin Luther King Drive
Cincinnati, OH 45268
513-569-7675
Fax: 513-569-7676

TECHNOLOGY DEVELOPER CONTACT:
Dick Jackson or John Londergan
Duke Engineering and Services, Inc.
9111 Research Blvd.
Austin, TX 78758
512-425-2000
Fax: 512-425-2199

The SITE Program assesses but does not approve or endorse technologies.

ENVIROMETAL TECHNOLOGIES, INC.
(Reactive Barrier)

TECHNOLOGY DESCRIPTION:

The Reactive Barrier technology is an innovative treatment system that uses the oxidation capacity of zero-valent iron to induce reduction of oxidized metals, reductive dechlorination of chlorinated volatile organic compounds (VOCs), and immobilization of some metals such as uranium by a combination of reduction and sorbtion.

Granular zero-valent iron oxidizes within the reactor vessel or reactive wall. As groundwater containing VOCs flows through the reactor and around these granules, electrons released by oxidation of the iron create a highly reducing environment in solution.

The hydrocarbon-chloride bonds in the chlorinated contaminants become unstable and break down sequentially, forming less chlorinated compounds and releasing nontoxic chloride ions to the groundwater. The completely hydrolyzed hydrocarbon compounds are nontoxic and degrade naturally. The rate of reaction depends primarily on the surface area of the iron or its abundance in the permeable reactive media. The dechlorination reaction is typically accompanied by an increase in groundwater pH and a decrease in oxidation/reduction potential. Inorganic constituents such as calcium, magnesium, and iron combine with carbonate or hydroxide ions in the treated water to form compounds such as metal carbonates and metal hydroxides that precipitate from solution as groundwater moves through the iron. Due to the precipitation of these metallic compounds from solution, the reaction is also typically accompanied by a decrease in total dissolved solids in the groundwater.

WASTE APPLICABILITY:

The Reactive Barrier technology is applicable to subsurface or above-ground treatment of VOCs and metals in groundwater or wastewater. The technology is adaptable to a variety of sites when used in combination with funnel and gate systems. Depth of the contaminated groundwater is the only constraint on the applicability of the technology.

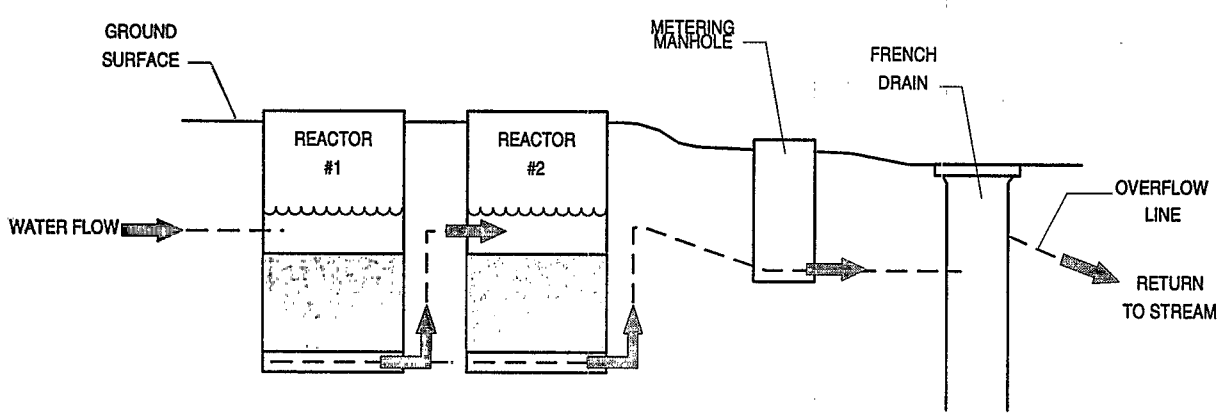

Schematic of the Reactive Barrier Technology

The SITE Program assesses but does not approve or endorse technologies.

STATUS:

The technology was accepted into the SITE Demonstration Program in 1996. The demonstration of the technology is currently in progress at the Rocky Flats Environmental Technology Site in Golden, Colorado. The technology's effectiveness will be evaluated through sampling and analysis of untreated and treated groundwater that is collected by a french drain system and transferred to two subsurface reactor tanks through gravity flow. Preliminary results from the evaluation will be available in mid to late 1999.

FOR FURTHER INFORMATION:

EPA PROJECT MANAGER:
Thomas Holdsworth
U.S. EPA
National Risk Management Research Laboratory
26 West Martin Luther King Drive
Cincinnati, OH 45268
513-569-7675

TECHNOLOGY CONTACT
John Vogan
Envirometal Technologies Incorporated
42 Arrow Road
Guelph, Ontario, Canada
N1K 1S6
519-824-0432

The SITE Program assesses but does not approve or endorse technologies.

GEOKINETICS INTERNATIONAL, INC.
(Electroheat-Enhanced Nonaqueous-Phase Liquids Removal)

TECHNOLOGY DESCRIPTION:

Geokinetics has developed and fully commercialized a novel in-situ process for the extraction and/or destruction of organic materials (nonaqueous phase liquids [NAPL]) from ground and groundwater. The process combines a novel direct electrical heating process with established soil vapor, dual phase and other extraction approaches. Heat is produced directly in the treatment zone by the passage of an AC current through the soil matrix. In effect, the ground and groundwater become the electrical resistor in a conventional resistive heating circuit.

Multi-phase electrical current is supplied to the soil matrix using proprietary high surface area electrodes inserted directly into the ground. Electrical current, heat-up rate, and other operating parameters are regulated by a proprietary computer-based (impedance matching) control system. This system incorporates automated data logging, fault tolerance, and remote operation to minimize field labor requirements.

The process works by gradually and uniformly heating the treatment zone to 60 to 80 °C. This produces the following effects:

- NAPL viscosity is significantly reduced
- A density inversion of many dense nonaqueous-phase liquid (DNAPL) components will occur causing it to float to the top of the saturated zone
- The smear zone will greatly reduce or even collapse
- Nascent biological activity will typically increase dramatically (provided the heat-up rate is managed carefully). This greatly increases natural biodegradation. When the treatment zone has reached its operating temperature, a combination of established extraction techniques are applied as appropriate to remove most or all of the NAPL. Treatment times typically include:

- 1 month for heat-up
- 4 to 8 months for primary extraction

WASTE APPLICABILITY:

The technology is broadly applicable for enhancing the removal of NAPLs and DNAPLs from a broad range of ground types. Recovered and destroyed contaminants include fuel oil, diesel, kerosene, PAHs, coal tar, hydraulic fluid, TCE, and other chlorinated solvents. ground types treated include clays, silty clays, shale beds, gravel deposits, etc. The technology has been deployed alongside, inside, and underneath existing buildings and structures.

STATUS:

Geokinetics first developed and commercialized the technology in Europe and has more than 40 projects completed or in progress. In the United States, Geokinetics' technology was accepted in the Superfund Innovative Technology Evaluation (SITE) program in 1997. The technology is scheduled for U.S. demonstration under the SITE program during September and October 1998 at the Pearl Harbor demonstration site in Oahu, Hawaii.

The SITE Program assesses but does not approve or endorse technologies.

FOR FURTHER INFORMATION:

EPA PROJECT MANAGER:
Tom Holdsworth
U.S. Environmental Protection Agency
Office of Research and Development
26 West Martin Luther King Drive
Cincinnati, OH 45268
513-569-7675 Fax: 513-569-7676

TECHNOLOGY DEVELOPER CONTACT:
Dr. Stephen R. Clarke
Geokinetics International, Inc.
829 Heinz Street
Berkeley, CA 94563
510-704-2941 Fax: 510-848-1581
Website: www.geokinetics.com

The SITE Program assesses but does not approve or endorse technologies.

ITT NIGHT VISION
(In situ Enhanced Bioremediation of Groundwater)

TECHNOLOGY DESCRIPTION:

ITT Night Vision is conducting in situ enhanced aerobic bioremediation of contaminated groundwater in fractured bedrock utilizing technologies developed at the U.S. Department of Energy Savannah River Site. This project currently involves remediation of groundwater in the vicinity of one contaminant source area as a pilot-scale operation, with the possibility of applying the technology elsewhere on site. Contaminants of concern in on-site groundwater include chlorinated solvents and their daughter products, plus acetone and isopropanol. To accelerate the intrinsic (natural) biodegradation observed at the site, the selected remedy involves the subsurface injection of air, gaseous-phase nutrients (triethyl phosphate and nitrous oxide), and methane. The amendments are being added to stimulate existing microbial populations (particularly methanotrophs) so that they can more aggressively break down the contaminants of concern. Amendment delivery to the is accomplished through an injection well, and the injection zone of influence is confirmed using surrounding groundwater monitoring wells and soil vapor monitoring points.

The patented PHOSter™ process for injection of triethyl phosphate in a gaseous phase was licensed for use at this site as an integral element of the enhanced bioremediation operation. This technology maximizes the subsurface zone of influence of nutrient injection as compared to technologies injecting nutrients in liquid or slurry form. Monitoring of contaminant (and breakdown product) concentrations in groundwater and soil vapor, measurement of microbiological population density and diversity, and monitoring of nutrient concentrations and groundwater geochemical parameters provides feedback on system effectiveness. This in turn allows adjustments to be made in the sequencing and rate of delivery of air, nutrients, and methane in response to changing subsurface conditions.

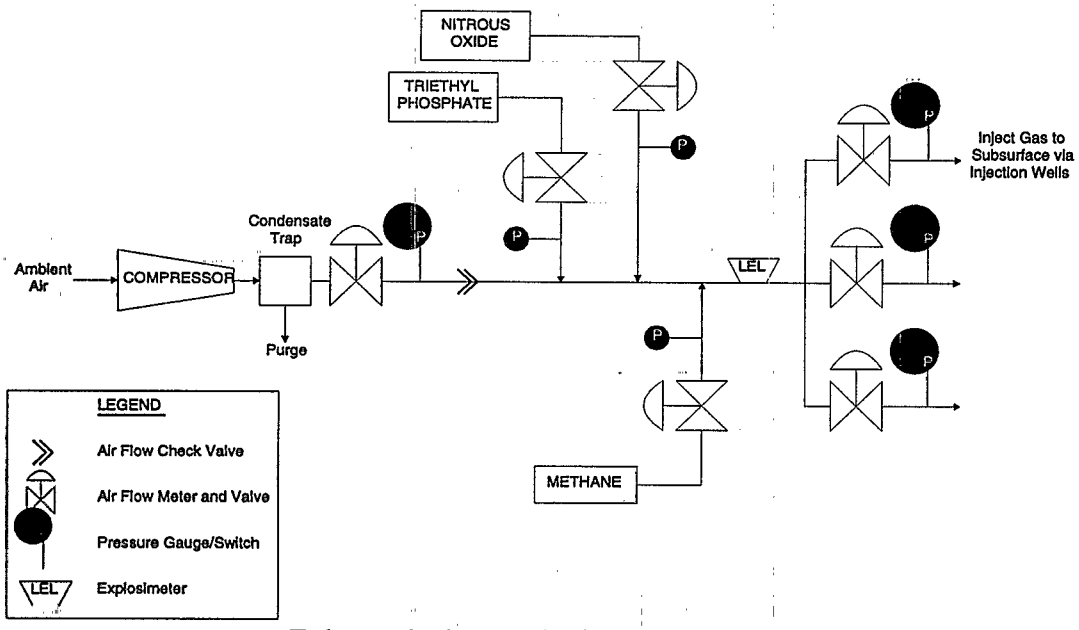

Enhanced Bioremediation Technology

The SITE Program assesses but does not approve or endorse technologies.

WASTE APPLICABILITY:

This enhanced bioremediation technology breaks down volatile organic compounds in groundwater. Compounds which are amenable to intrinsic (natural) biodegradation can be degraded more rapidly when the subsurface microbial populations are stimulated through the injection of air, gaseous-phase nutrients, and methane. By providing an aerobic environment for contaminant degradation, harmless breakdown products are produced and toxic daughter products of anaerobic degradation of chlorinated solvents (such as vinyl chloride) can be broken down completely. This in-situ technology is especially applicable in situation where subsurface infrastructure (for example, networks of utilities) limit or preclude excavation or extraction technologies.

STATUS:

The enhanced bioremediation system, currently being used in the ongoing RCRA corrective action interim measure at the ITT Night Vision facility, was accepted into the SITE program in 1997, with system start up occurring in March of 1998. The technology had previously been approved by EPA Region 3 as an Interim Measure part of the facility's ongoing RCRA Corrective Action program.

SITE program participants collected groundwater quality and microbiological data prior to system start up (baseline monitoring) and between the air and nutrient injection campaigns (interim monitoring). Baseline monitoring established a statistical reference point for contaminants of concern in groundwater. Interim monitoring suggests that the initial injection campaigns have successfully stimulated the growth of native microbial populations based upon the results of phospholipid fatty acid assays and methanotroph most probable number plate counts. Corresponding decreases in concentrations of contaminants of concern have also been discernible.

FOR FURTHER INFORMATION:

EPA PROJECT MANAGER:
Vince Gallardo
US EPA
National Risk Management Research Laboratory
26 W. Martin Luther King Drive
Cincinnati, OH 45268
513-569-7176

ITT NIGHT VISION PROJECT MANAGER:
Rosann Kryczkowski
Manager, Environmental, Health & Safety
ITT Night Vision
7635 Plantation Road
Roanoke, VA 24019-3257
540-362-7356
Fax: 540-362-7370

TECHNOLOGY DEVELOPER CONTACT:
Brian B. Looney, Ph.D.
Westinghouse Savannah River Company
Savannah River Technology Center
Aiken, SC 29808
803-725-3692
Fax: 803-725-7673

The SITE Program assesses but does not approve or endorse technologies.

KSE, INC.
(Adsorption-Integrated-Reaction Process)

TECHNOLOGY DESCRIPTION:

The Adsorption-Integrated-Reaction (AIR 2000) process combines two unit operations, adsorption and chemical reaction, to treat air streams containing dilute concentrations of volatile organic compounds (VOC) (see photograph below).

The contaminated air stream containing dilute concentrations of VOCs flows into a photocatalytic reactor, where chlorinated and nonchlorinated VOCs are destroyed. The VOCs are trapped on the surface of a proprietary catalytic adsorbent. This catalytic adsorbent is continuously illuminated with ultraviolet light, destroying the trapped, concentrated VOCs through enhanced photocatalytic oxidation. This system design simultaneously destroys VOCs and continuously regenerates the catalytic adsorbent. Only oxygen in the air is needed as a reactant. The treated effluent air contains carbon dioxide and water, which are carried out in the air stream exiting the reactor. For chlorinated VOCs, the chlorine atoms are converted to hydrogen chloride with some chlorine gas. If needed, these gases can be removed from the air stream with conventional scrubbers and adsorbents.

The AIR 2000 process offers advantages over other photocatalytic technologies because of the high activity, stability, and selectivity of the photocatalyst. The photocatalyst, which is not primarily titanium dioxide, contains a number of different semiconductors, which allows for rapid and economical treatment of VOCs in air. Previous results indicate that the photocatalyst is highly resistant to deactivation, even after thousands of hours of operation in the field.

The particulate-based photocatalyst allows for more freedom in reactor design and more economical scale-up than reactors with a catalyst film coated on a support medium. Packed beds, radial flow reactors, and monolithic reactors are all feasible reactor designs. Because the catalytic adsorbent is continuously regenerated, it does not require disposal or removal for regeneration, as traditional carbon adsorption typically does. The AIR 2000 process produces no residual wastes or by-products needing further treatment or disposal as hazardous waste. The treatment system is self-contained and mobile, requires a small amount of space, and requires less energy than thermal incineration or catalytic oxidation. In addition, it has lower total system costs than

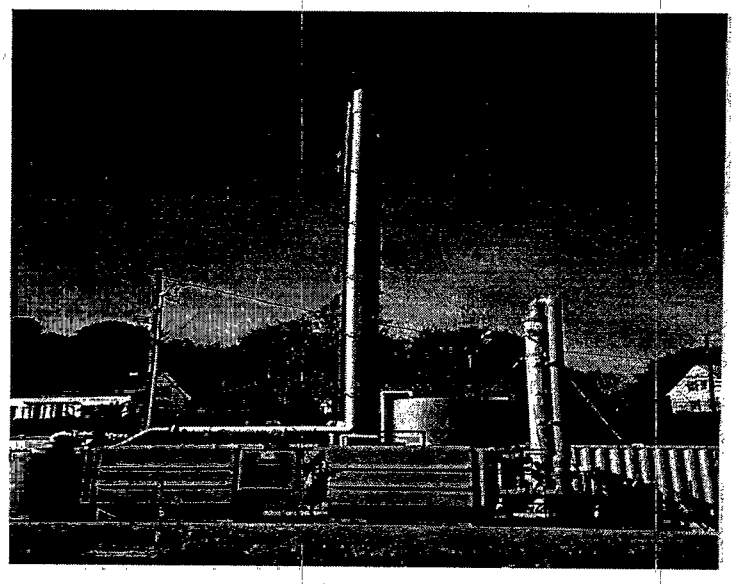

AIR2000

The SITE Program assesses but does not approve or endorse technologies.

these traditional technologies, and can be constructed of fiberglass reinforced plastic (FRP) due to the low operating temperatures.

WASTE APPLICABILITY:

The AIR 2000 process is designed to treat a wide range of VOCs in air, ranging in concentration from less than 1 to as many as thousands of parts per million. The process can destroy the following VOCs: chlorinated hydrocarbons, aromatic and aliphatic hydrocarbons, alcohols, ethers, ketones, and aldehydes.

The AIR 2000 process can be integrated with existing technologies, such as thermal desorption, air stripping, or soil vapor extraction, to treat additional media, including soils, sludges, and groundwater.

STATUS:

The AIR 2000 process was accepted into the SITE Emerging Technology Program in 1995. Studies under the Emerging Technology Program are focusing on (1) developing photocatalysts for a broad range of chlorinated and nonchlorinated VOCs, and (2) designing advanced and cost-effective photocatalytic reactors for remediation and industrial service.

The AIR 2000 Process was initially evaluated at full-scale operation for treatment of soil vapor extraction off-gas at Loring Air Force Base (AFB). Destruction efficiency of tetrachloroethene exceeded 99.8 percent. The performance results were presented at the 1996 World Environmental Congress.

The AIR-I process, an earlier version of the technology, was demonstrated as part of a groundwater remediation demonstration project at Dover AFB in Dover, Delaware, treating effluent air from a groundwater stripper. Test results showed more than 99 percent removal of dichloroethane (DCA) from air initially containing about 1 ppm DCA and saturated with water vapor.

A 700 SCFM commercial unit is now operating at a Superfund Site in Rhode Island, destroying TCE, DCE and vinyl chloride in the combined off-gas from a SVE system and a groundwater stripper. Preliminary results show that the system is operating at 99.99% destruction efficiency. The AIR 2000 unit is operating unattended, with the number of UV lamps being illuminated changing automatically in response to changing flow conditions for maximum performance at minimum cost.

The AIR 2000 Process was accepted into the SITE Demonstration program in 1998, with the objective of demonstrating the performance of the system at the Superfund site in Rhode Island.

FOR FURTHER INFORMATION:

EPA PROJECT MANAGER:
Vince Gallardo
U.S. EPA
National Risk Management Research Laboratory
26 West Martin Luther King Drive
Cincinnati, OH 45268
513-569-7176
Fax: 513-569-7620
E-mail: gallardo.vincente@epamail.epa.gov

TECHNOLOGY DEVELOPER CONTACT:
J.R. Kittrell
KSE, Inc.
P.O. Box 368
Amherst, MA 01004
413-549-5506
Fax: 413-549-5788
e-mail: kseinc@aol.com

TECHNOLOGY LICENSEE CONTACT:
Dr. Bill de Waal
Trojan Technologies, Inc.
3020 Gore Road
London, Ontario N5V-4T7
CANADA
519-457-3400
Fax: 519-457-3030

The SITE Program assesses but does not approve or endorse technologies.

LASAGNA™ PUBLIC-PRIVATE PARTNERSHIP
(Lasagna™ In Situ Soil Remediation)

TECHNOLOGY DESCRIPTION:

The Lasagna™ process, so named because of its treatment layers, combines electrokinetics with treatment layers which are installed directly into the contaminated soil to form an integrated, in situ remedial process. The layers may be configured vertically (Figure 1) or horizontally (Figure 2). The process is designed to treat soil and groundwater contaminants completely in situ, without the use of injection or extraction wells.

The outer layers consist of either positively or negatively charged electrodes. The electrodes create an electric field which moves contaminants in soil pore fluids into or through the treatment layers. In the vertical configuration, rods that are steel or granular graphite and iron filings may be used as electrodes. In the horizontal configuration, the electrodes and treatment zones are installed by hydraulic fracturing. Granular graphite is used for the electrodes and the treatment zones are granular iron (for zero-valent, metal-enhanced, reductive dechlorination) or granular activated carbon (for biodegradation by methanotrophic microorganisms). The Lasagna™ process can remove contaminants from soil using the following combination:

- Creating treatment zones in close proximity to one another throughout the contaminated soil region, and converting them into sorption/degradation zones by introducing sorbents, catalytic agents, microbes, oxidants, or buffers
- Using electrokinetics to transport contaminants from the soil into the treatment zones for sorption/degradation
- Reversing the direction of transport, if necessary, by switching electrical polarity

The orientation of the electrodes and treatment zones depends on the characteristics of the site and the contaminants. In general, the vertical configuration is probably more applicable to more shallow contamination, within 50 feet of the ground surface. The horizontal configuration, using hydraulic fracturing or related methods, is uniquely capable of treating much deeper contamination.

WASTE APPLICABILITY:

Conceptually, the Lasagna™ process is designed to treat organic and inorganic contaminants and mixed wastes in groundwater and soil. To date, the process has been tested primarily on organic contaminants in low permeability soils.

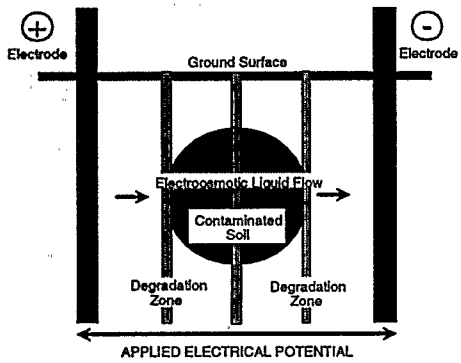

Note: Electroosmotic flow is reversed upon switching electrical polarity.

Vertical Configuration of the Lasagna™ Process

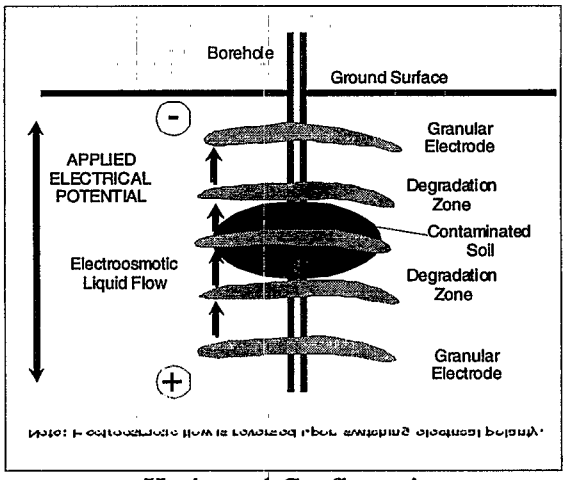

Horizontal Configuration of the Lasagna™ Process

The SITE Program assesses but does not approve or endorse technologies.

STATUS:

The Lasagna™ process (vertical configuration) was accepted into the SITE Demonstration Program in 1995. Under the SITE Program, with significant funding from the U.S. Department of Energy (DOE), the Lasagna™ process was tested for 120 days in May 1995 on soil contaminated with trichloroethene (TCE) at DOE's Paducah Gaseous Diffusion Plant (PGDP) in Kentucky. One of the key objectives of this test was to successfully demonstrate the coupling of electroosmotic flushing of TCE from the clay soil while removing the TCE from the pore water by in situ adsorption. Steel panels were used as electrodes and granular activated carbon (GAC) served as treatment layers in a vertical configuration.

Sampling and analysis of the GAC at the end of the demonstration revealed a substantial GAC amount of TCE. Soil samples collected before and after the demonstration indicated a 98 percent removal of TCE from tight clay soil, with some samples showing greater than 99 percent removal. TCE soil levels were reduced from the 100 parts per million (ppm) range to an average concentration of 1 ppm.

A second test of the Lasagna™ process in a vertical configuration was started in August 1996 at DOE's PGDP to treat in situ TCE-contaminated soil to 45 feet below ground surface. A sheetpiling method was utilized with hollow mandrels for installing electrodes (granular mixture of coke and iron filings) and treatment zones (iron filings/clay slurry) in thin layers (less than 2 inches thick) through stiff clay soil without generating solid waste. Complications encountered during the operation included contamination levels significantly higherthan anticipated and complex hydrogeology in the subsurface. The overall TCE removal efficiency obtained was in the range of 95 percent for 1 pore volume of water flow to over 99 percent for 2.6 pore volumes between the treatment zones. There are strong indications that some of the TCE was transported and degraded in the dense non-aqueous phase liquid form. Based on the success of this test, DOE has recommended that the Lasagna™ process be used to clean up the rest of this contaminated location at PGDP.

EPA and the University of Cincinnati have installed horizontal configuration cells at Rickenbacker Air National Guard Base (ANGB) near Columbus, Ohio. Support facilities are being installed at Offutt Air Force Base (AFB) near Omaha, Nebraska. Horizontal configuration cells will be installed at Offutt AFB in spring 1997 with funding support from the U.S. Air Force. TCE is the target contaminant at both Rickenbacker ANGB and Offutt AFB.

FOR FURTHER INFORMATION:

EPA PROJECT MANAGER:
Michelle Simon
U.S. EPA
National Risk Management Research Laboratory
26 West Martin Luther King Drive
Cincinnati, OH 45268
513-569-7775 or 513-569-7469
Fax: 513-569-7676

TECHNOLOGY DEVELOPER CONTACT:
Michael Roulier
U.S. EPA
National Risk Management Research Laboratory
26 West Martin Luther King Drive
Cincinnati, OH 45268
513-569-7796
Fax: 513-569-7620

Sa Ho
Monsanto Company
800 N. Lindbergh Boulevard
St. Louis, MO 63167
314-694-5179
Fax: 314-694-1531

The SITE Program assesses but does not approve or endorse technologies.

MACTEC-SBP TECHNOLOGIES COMPANY, L.L.C.
(formerly EG&G Environmental, Inc.)
(NoVOCs™ In-Well Stripping Technology)

TECHNOLOGY DESCRIPTION:

MACTEC-SBP provides the patented NoVOCs™ in-well stripping technology for the in situ removal of volatile organic compounds (VOC) from groundwater (see figure below). NoVOCs™ combines air-lift pumping with in-well vapor stripping to remove VOCs from groundwater without the need to remove, treat, and discharge a wastewater stream. The process also can be adapted to remove both VOCs and soluble metals from groundwater. NoVOCs™ consists of a well screened both beneath the water table and in the vadose zone. An air line within the well runs from an aboveground blower and extends below the water table. Pressurized air injected below the water table aerates the water within the well, creating a density gradient between the aerated water and the more dense water in the surrounding aquifer. As a result, groundwater flows through the lower well screen and forces the aerated water upward within the well, and is in turn accelerated. The result is a

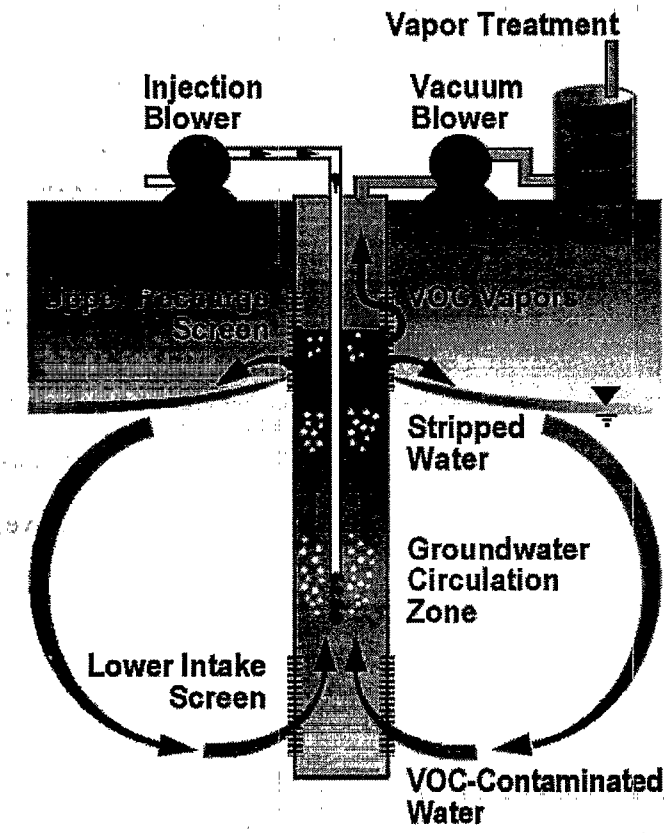

Schematic Diagram of the NoVOCs™ Technology

The SITE Program assesses but does not approve or endorse technologies.

rising column of aerated water within the well, essentially acting as an air-lift pump

As the aerated groundwater column rises within the well, VOC mass transfer occurs from the dissolved phase to the vapor phase. Above the water table, a packer is installed at the upper screen to prevent the passage of rising water or bubbles. The rising water column hits the packer, the bubbles burst, and the entrained VOC vapor is stripped off laterally through the screen by an upper vacuum casing. The VOC-rich vapor is brought to the surface for treatment while the laterally deflected water circulates back into the aquifer. Reinfiltrating water creates a toroidal circulation pattern around the well, enabling the groundwater to undergo multiple treatment cycles before flowing downgradient. The VOC-rich vapor is treated using commercially available techniques chosen according to the vapor stream characteristics.

NoVOCs™ also can be used to remove readily reduced metals from groundwater and stabilize them in the vadose zone. Solubilized metals in their oxidized states enter the lower screen by the same route as dissolved VOCs in the groundwater. The nonvolatile metals remain in solution as the VOCs are stripped at the upper screen and the water circulates out of the well. The groundwater and soluble metals then pass through an infiltration and treatment gallery surrounding the upper well screen. This treatment gallery is impregnated with a reducing agent that reduces the soluble metals to an insoluble valence state. The insoluble metals accumulate in the infiltration gallery high above the water table and can be either capped or excavated at the conclusion of remedial action.

WASTE APPLICABILITY:

The process treats groundwater contaminated with volatile petroleum hydrocarbons including benzene, ethylbenzene, and toluene, as well as chlorinated solvents such as tetrachloroethene and trichloroethene. Highly soluble organics like alcohols and ketones are not easily air-stripped from water but are readily biodegraded in the oxygen-rich environment produced by NoVOCs™.

STATUS:

The NoVOCs™ technology was accepted into the SITE Demonstration Program in 1995. The demonstration is underway at Naval Air Station North Island in San Diego, California.

FOR FURTHER INFORMATION:

EPA PROJECT MANAGER:
Michelle Simon
U.S. EPA
National Risk Management Research Laboratory
26 West Martin Luther King Drive
Cincinnati, OH 45268
513-569-7469
Fax: 513-569-7676

TECHNOLOGY DEVELOPER CONTACT:
Mark McGlathery
MACTEC-SBP Technologies Company, L.L.C.
1819 Denver West Drive, Suite 400
Golden, CO 80401
303-278-3100
Fax: 303-273-5000

The SITE Program assesses but does not approve or endorse technologies.

MATRIX PHOTOCATALYTIC INC.
(Photocatalytic Air Treatment)

TECHNOLOGY DESCRIPTION:

Matrix Photocatalytic Inc. is developing a titanium dioxide (TiO_2) photocatalytic air treatment technology that destroys volatile organic compounds (VOC) and semivolatile organic compounds in air streams. During treatment, contaminated air at ambient temperatures flows through a fixed TiO_2 catalyst bed activated by ultraviolet (UV) light. Typically, organic contaminants are destroyed in fractions of a second.

Technology advantages include the following:

- Robust equipment
- No residual toxins
- No ignition source
- Unattended operation
- Low direct treatment cost

The technology has been tested on benzene, toluene, ethylbenzene, and xylene; trichloroethene; tetrachloroethane; isopropyl alcohol; acetone; chloroform; methanol; and methyl ethyl ketone. A field-scale system is shown in the photograph on the next page.

WASTE APPLICABILITY:

The TiO_2 photocatalytic air treatment technology can effectively treat dry or moist air. The technology has been demonstrated to purify contaminant steam directly, thus eliminating the need to condense. Systems of 100 cubic feet per minute have been successfully tested on vapor extraction operations, air stripper emissions, steam from desorption processes, and VOC emissions from manufacturing facilities. Other potential applications include odor removal, stack

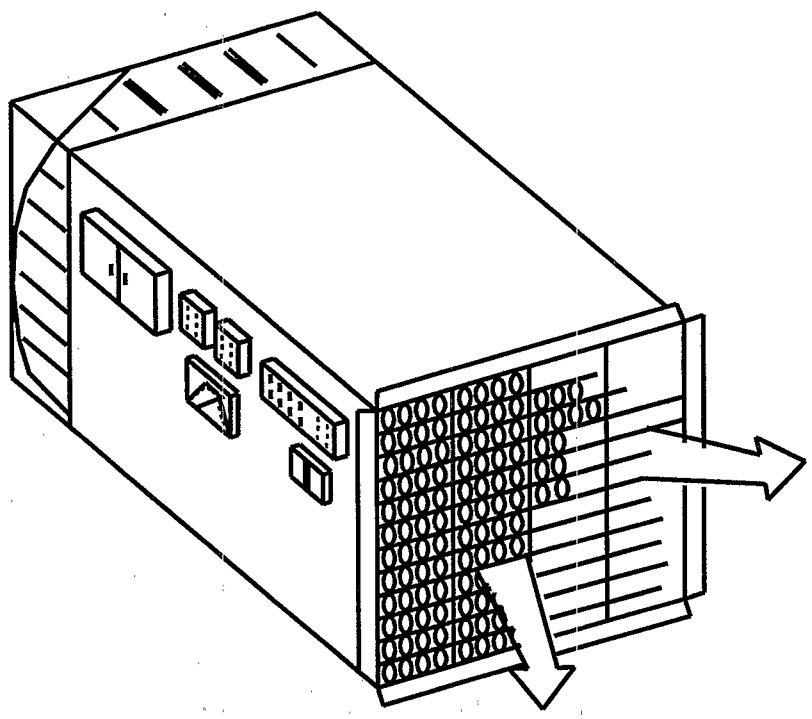

Full-Scale Photocatalytic Air Treatment System

The SITE Program assesses but does not approve or endorse technologies.

gas treatment, soil venting, and manufacturing ultra-pure air for residential, automotive, instrument, and medical needs. Systems of up to about 1,000 cubic feet per minute can be cost-competitive with thermal destruction systems.

STATUS:

The TiO_2 photocatalytic air treatment technology was accepted into SITE Emerging Technology Program (ETP) in October 1992; the evaluation was completed in 1993. Based on results from the ETP, this technology was invited to participate in the SITE Demonstration Program. For further information about the evaluation under the ETP, refer to the journal article (EPA/600/A-93/282), which is available from EPA. A suitable demonstration site is being sought.

FOR FURTHER INFORMATION:

EPA PROJECT MANAGER:
Richard Eilers
U.S. EPA
National Risk Management Research Laboratory
26 West Martin Luther King Drive
Cincinnati, OH 45268
513-569-7809
Fax: 513-569-7111

TECHNOLOGY DEVELOPER CONTACT:
Bob Henderson
Matrix Photocatalytic Inc.
22 Pegler Street
London, Ontario, Canada N5Z 2B5
519-660-8669
Fax: 519-660-8525

The SITE Program assesses but does not approve or endorse technologies.

NATIONAL RISK MANAGEMENT RESEARCH LABORATORY
(Bioventing)

TECHNOLOGY DESCRIPTION:

Lack of oxygen in contaminated soil often limits aerobic microbial growth. The bioventing biological system treats contaminated soil in situ by injecting atmospheric air. This air provides a continuous oxygen source, which enhances the growth of microorganisms naturally present in the soil. Additives such as ozone or nutrients may be introduced to stimulate microbial growth.

Bioventing technology uses an air pump attached to one of a series of air injection probes (see figure below). The air pump operates at extremely low pressures, providing inflow of oxygen without significantly volatilizing soil contaminants. The treatment capacity depends on the number of injection probes, the size of the air pump, and site characteristics such as soil porosity.

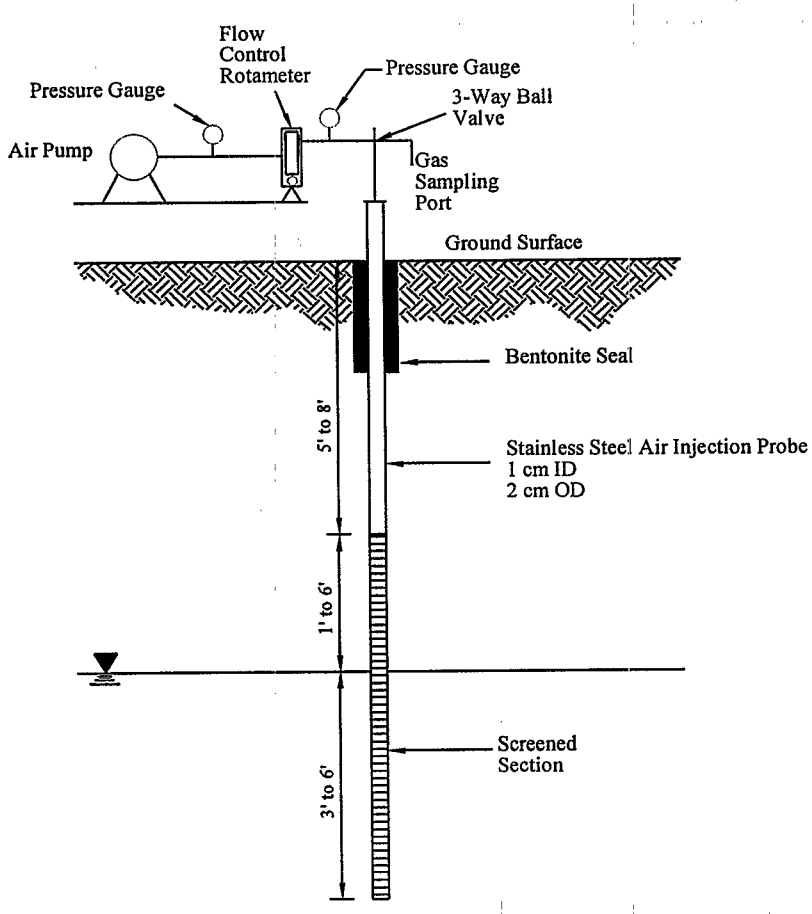

Bioventing System

The SITE Program assesses but does not approve or endorse technologies.

WASTE APPLICABILITY:

Bioventing is typically used to treat soil contaminated by industrial processes and can treat any contamination subject to aerobic microbial degradation. Bioventing treats contaminants and combinations of contaminants with varying degrees of success.

STATUS:

This technology was accepted into the SITE Demonstration Program in July 1991. The demonstration began in November 1992 at the Reilly Tar site in St. Louis Park, Minnesota. Soil at this site is contaminated with polynuclear aromatic hydrocarbons. The project will be completed in early 1999.

FOR FURTHER INFORMATION:

EPA PROJECT MANAGER:
Jack Hubbard
U.S. EPA
National Risk Management Research Laboratory
26 West Martin Luther King Drive
Cincinnati, OH 45268
513-569-7507
Fax: 513-569-7620

TECHNOLOGY DEVELOPER CONTACT:
Paul McCauley
U.S. EPA
National Risk Management Research Laboratory
26 West Martin Luther King Drive
Cincinnati, OH 45268
513-569-7444
Fax: 513-569-7105

The SITE Program assesses but does not approve or endorse technologies.

PHYTOKINETICS, INC.
(Phytoremediation Process)

TECHNOLOGY DESCRIPTION:

Phytoremediation is the treatment of contaminated soils, sediments, and groundwater with higher plants. Several biological mechanisms are involved in phytoremediation. The plant's ability to enhance bacterial and fungal degradative processes is important in the treatment of soils. Plant-root exudates, which contain nutrients, metabolites, and enzymes, contribute to the stimulation of microbial activity. In the zone of soil closely associated with the plant root (rhizosphere), expanded populations of metabolically active microbes can biodegrade organic soil contaminants.

The application of phytoremediation involves characterizing the site and determining the proper planting strategy to maximize the interception and degradation of organic contaminants. Site monitoring ensures that the planting strategy is proceeding as planned. The following text discusses (1) using grasses to remediate surface soils contaminated with organic chemical wastes (Figure 1), and (2) planting dense rows of poplar trees to treat organic contaminants in the saturated groundwater zone (Figure 2).

Soil Remediation - Phytoremediation is best suited for surface soils contaminated with intermediate levels of organic contaminants. Preliminary soil phytotoxicity tests are conducted at a range of contaminant concentrations to select plants which are tolerant. The contaminants should be relatively nonleachable, and must be within the reach of plant roots. Greenhouse-scale treatability studies are often used to select appropriate plant species.

Grasses are frequently used because of their dense fibrous root systems. The selected species are planted, soil nutrients are added, and the

Phytoremediation of Surface Soil

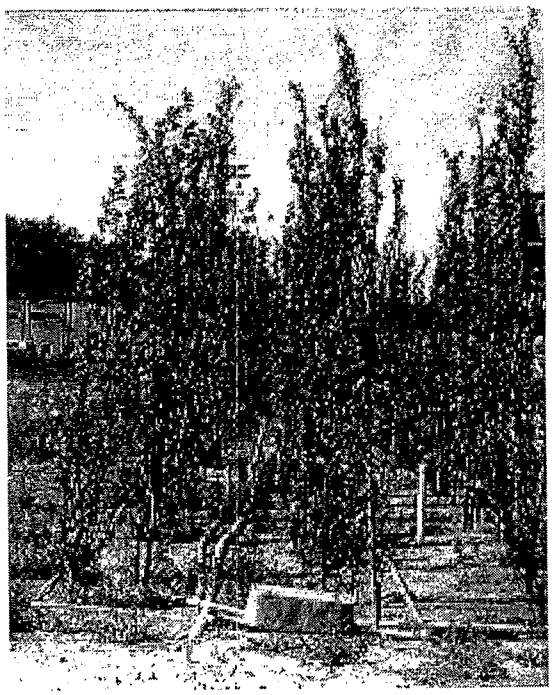

Phytoremediation of the Saturated Zone

The SITE Program assesses but does not approve or endorse technologies.

plots are intensively cultivated. Plant shoots are cut during the growing season to maintain vegetative, as opposed to reproductive, growth. Based on the types and concentrations of contaminants, several growing seasons may be required to meet the site's remedial goals.

Groundwater Remediation - The use of poplar trees for the treatment of groundwater relies in part on the tree's high rate of water use to create a hydraulic barrier. This technology requires the establishment of deep roots that use water from the saturated zone. Phytokinetics uses deep-rooted, water-loving trees such as poplars to intercept groundwater plumes and reduce contaminant levels. Poplars are often used because they are phreatophytic; that is, they have the ability to use water directly from the saturated zone.

A dense double or triple row of rapidly growing poplars is planted downgradient from the plume, perpendicular to the direction of groundwater flow. Special cultivation practices are use to induce deep root systems. The trees can create a zone of depression in the groundwater during the summer months because of their high rate of water use. Groundwater contaminants may tend to be stopped by the zone of depression, becoming adsorbed to soil particles in the aerobic rhizosphere of the trees. Reduced contaminant levels in the downgradient groundwater plume would result from the degradative processes described above.

WASTE APPLICABILITY:

Phytoremediation is used for soils, sediments, and groundwater containing intermediate levels of organic contaminants.

STATUS:

This technology was accepted into the SITE Demonstration Program in 1995. The demonstration will occur at the former Chevron Terminal #129-0350 site in Ogden, Utah. This demonstration will assess the ability of higher plants to reduce the concentration of petroleum hydrocarbons in near-surface soils, and to modify the groundwater gradient and reduce petroleum hydrocarbons in the saturated zone. Alfalfa and fescue plantings will be evaluated for soil remediation, while poplar and juniper trees will be investigated for their ability to treat the saturated groundwater zone.

The primary objectives of the demonstration are to determine whether (1) total petroleum hydrocarbon concentrations in the soil in plots planted with alfalfa and fescue will be reduced by 30 percent annually, and (2) an average annual 3-inch change in the groundwater elevation can be attributed to the trees. The demonstration continued through the 1998 growing season, with reports available in 1999.

FOR FURTHER INFORMATION:

EPA PROJECT MANAGER:
Steven Rock
U.S. EPA
National Risk Management Research Laboratory
26 West Martin Luther King Drive
Cincinnati, OH 45268
513-569-7149
Fax: 513-569-7105

TECHNOLOGY DEVELOPER CONTACT:
Ari Ferro
Phytokinetics, Inc.
1770 North Research Parkway
Suite 110
North Logan, UT 84341-1941
801-750-0985
801-755-0891
Fax: 801-750-6296

The SITE Program assesses but does not approve or endorse technologies.

PHYTOTECH
(Phytoremediation Technology)

TECHNOLOGY DESCRIPTION:

Phytotech is an environmental biotechnology company that uses specially selected and engineered plants to treat soil and water contaminated with toxic metals such as lead and cadmium, as well as radionuclides. The treatment of soils or sediments with this technology is referred to as phytoextraction (see figure below).

Phytoextraction offers an efficient, cost-effective, and environmentally friendly way to clean up heavy metal contamination. Plants are grown in situ on contaminated soil and harvested after toxic metals accumulate in the plant tissues. The degree of accumulation varies with several factors, but can be as high as 2 percent of the plants' aboveground dry weight, leaving clean soil in place with metal concentrations that equal or are less than regulatory cleanup levels. After accumulation in the plant tissues, the contaminant metal must be disposed of, but the amount of disposable biomass is a small fraction of the amount of soil treated. For example, excavating and landfilling a 10-acre site contaminated with 400 parts per million (ppm) lead to a depth of 1 foot requires handling roughly 20,000 tons of lead-contaminated soil. Phytoextraction of a 10-acre site to remove 400 ppm of lead from the top 1 foot would require disposal of around 500 tons of biomass - about 1/40 of the soil cleaned. In

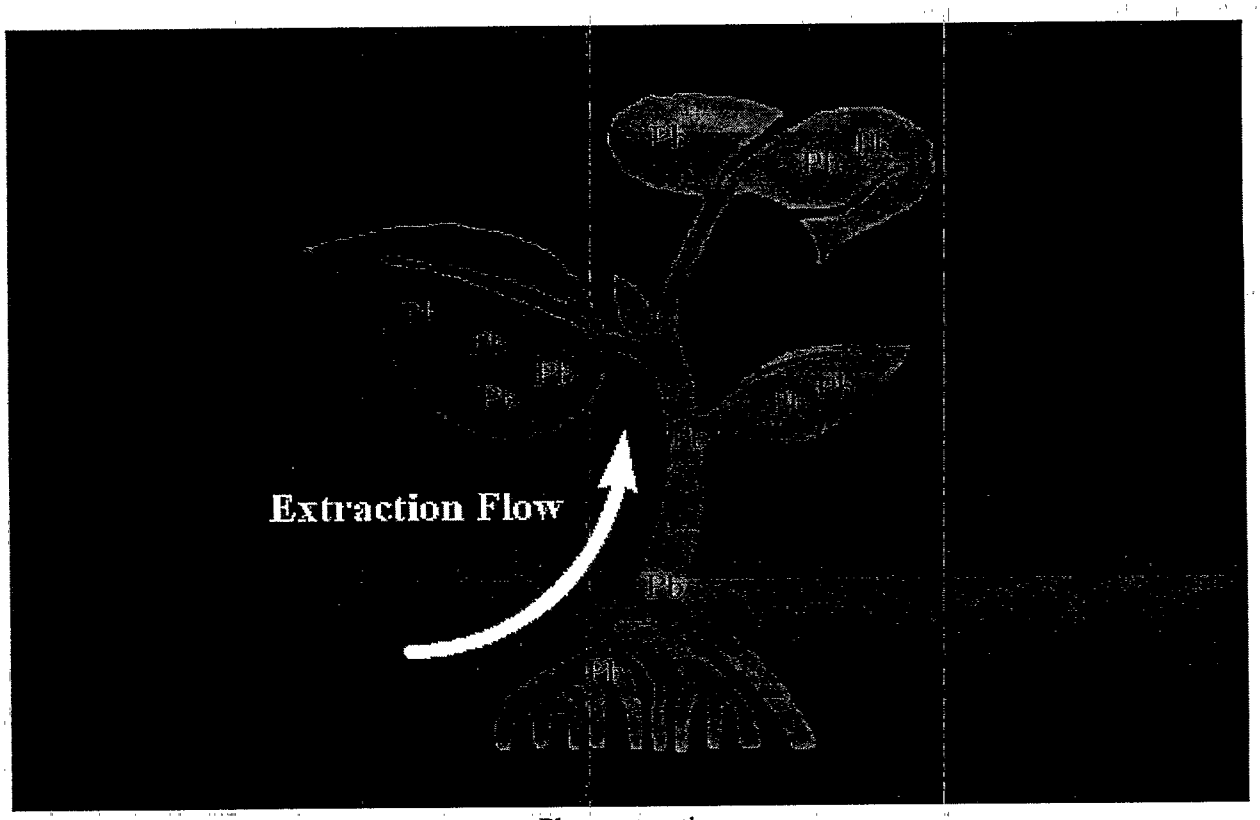

Phytoextraction

The SITE Program assesses but does not approve or endorse technologies.

the example cited, six to eight crops would typically be needed, with three or four crops per growing season.

Compared to traditional remedial technologies, phytoextraction offers the following benefits:

- Lower cost
- Applicability to a broad range of metals
- Potential for recycling the metal-rich biomass
- Minimal environmental disturbance
- Minimization of secondary air- and water-borne wastes

WASTE APPLICABILITY:

Phytotech's phytoextraction technology can be used to clean soil or sediments contaminated with lead, cadmium, chromium, cesium/strontium and uranium. Phytoremediation of other metals such as arsenic, zinc, copper, and thorium is in the research stage.

STATUS:

Phytotech was accepted into the SITE Demonstration Program in 1997. Under the SITE Program, Phytotech is demonstrating its phytoremediation technology at a former battery manufacturing facility in Trenton, New Jersey. where soil is contaminated with lead. The site has been prepared and characterized, and two crops were planted and harvested in late summer 1998. Phytotech has also conducted several successful field trials of its phytoextraction technology at other contaminated sites in the U.S. and abroad.

Phytotech has conducted several field demonstrations of its rhizofiltration technology for the removal of (1) cesium/strontium at Chernobyl, and (2) uranium from contaminated groundwater at a DOE site in Ashtabula, Ohio. At Chernobyl, sunflowers were shown to extract 95 percent of the radionuclides from a small pond within 10 days. At the Ashtabula site, Phytotech ran a 9-month pilot demonstration during which incoming water containing as much as 450 parts per billion (ppb) uranium was treated to 5 ppb or less of uranium.

FOR FURTHER INFORMATION:

EPA PROJECT MANAGER:
Steven Rock
U.S. EPA
National Risk Management Research Laboratory
26 West Martin Luther King Drive
Cincinnati, OH 45268
513-569-7149
Fax: 513-569-7105

TECHNOLOGY DEVELOPER CONTACT:
Michael Blaylock (ext. 13) or
Eric Muhr (ext. 32)
Phytotech
One Deer Park Drive, Suite I
Monmouth Junction, NJ 08852
732-438-0900
Fax: 732-438-1209
E-Mail: soilrx@aol.com or
ericmuhr@mars.superlink.net

The SITE Program assesses but does not approve or endorse technologies.

PINTAIL SYSTEMS, INC.
(Spent Ore Bioremediation Process)

TECHNOLOGY DESCRIPTION:

This technology uses microbial detoxification of cyanide in heap leach processes to reduce cyanide levels in spent ore and process solutions. The biotreatment populations of natural soil bacteria are grown to elevated concentrations, which are applied to spent ore by drip or spray irrigation. Process solutions are treated with bacteria concentrates in continuous or batch applications. This method may also enhance metal remineralization, reducing acid rock drainage and enhancing precious metal recovery to offset treatment costs.

Biotreatment of cyanide in spent ore and ore processing solutions begins by identifying bacteria that will grow in the waste source and that use the cyanide for normal cell building reactions. Native isolates are ideally adapted to the spent ore environment, the available nutrient pool, and potential toxic components of the heap environment. The cyanide-detoxifying bacteria are typically a small fraction of the overall population of cyanide-tolerant species.

For this reason, native bacteria isolates are extracted from the ore and tested for cyanide detoxification potential as individual species. Any natural detoxification potentials demonstrated in flask cyanide decomposition tests are preserved and submitted for bioaugmentation. Bioaugmentation of the cyanide detoxification population eliminates nonworking species of bacteria and enhances the natural detoxification potential by growth in waste infusions and chemically defined media. Pintail Systems, Inc. (PSI) maintains a bacterial library of some 2,500 strains of microorganisms and a database of their characteristics.

The working population of treatment bacteria is grown in spent ore infusion broths and process solutions to adapt to field operating conditions. The cyanide in the spent ore serves as the primary carbon or nitrogen source for bacteria nutrition. Other required trace nutrients are provided in the chemically defined broths. The bacterial consortium is then tested on spent ore in a 6-inch-by-10-foot column in the field or in the laboratory. The column simulates leach pile

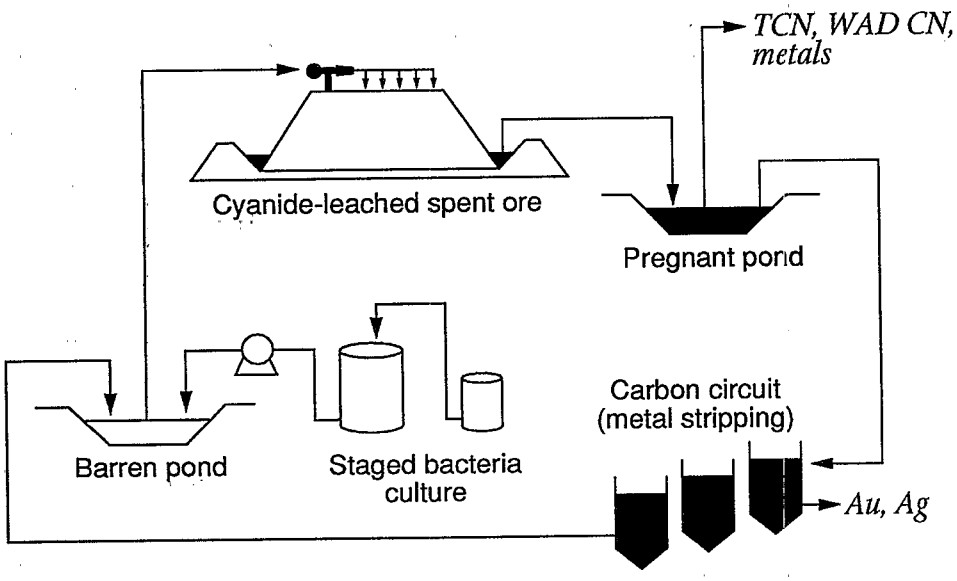

Spent Ore Bioremediation Process

The SITE Program assesses but does not approve or endorse technologies.

conditions, so that detoxification rates, process completion, and effluent quality can be verified. Following column tests, a field test may be conducted to verify column results.

The spent ore is remediated by first setting up a stage culturing system to establish working populations of cyanide-degrading bacteria at the mine site. Bacterial solutions are then applied directly to the heap using the same system originally designed to deliver cyanide solutions to the heap leach pads (see figure on previous page). Cyanide concentrations and leachable metals are then measured in heap leach solutions. This method of cyanide degradation in spent ore leach pads degrades cyanide more quickly than methods which treat only rinse solutions from the pad. In addition to cyanide degradation, biological treatment of heap leach pads has also shown significant biomineralization and reduction of leachable metals in heap leachate solutions.

WASTE APPLICABILITY:

The spent ore bioremediation process can be applied to treat cyanide contamination, spent ore heaps, waste rock dumps, mine tailings, and process water from gold and silver mining operations.

STATUS:

This technology was accepted into the SITE Demonstration Program in May 1994. A site located in Battle Mountain, Nevada has been selected for the demonstration. Preliminary treatability tests have been completed. In addition, PSI has completed two full-scale cyanide detoxification projects.

FOR FURTHER INFORMATION:

EPA PROJECT MANAGER:
Jack Hubbard
U.S. EPA
National Risk Management Research Laboratory
26 West Martin Luther King Drive
Cincinnati, OH 45268
513-569-7507
Fax: 513-569-7620

TECHNOLOGY DEVELOPER CONTACT:
Leslie Thompson
Pintail Systems, Inc.
11801 East 33rd Avenue, Suite C
Aurora, CO 80010
303-367-8443
Fax: 303-364-2120

The SITE Program assesses but does not approve or endorse technologies.

PRAXIS ENVIRONMENTAL TECHNOLOGIES, INC.
(In Situ Thermally Enhanced Extraction (TEE) Process)

TECHNOLOGY DESCRIPTION:

The PRAXIS TEE in situ thermal extraction process heats soil with steam injection, enhancing pump-and-treat and soil vapor extraction processes used to treat volatile organic compounds (VOC) and semivolatile organic compounds (SVOC). This process is an effective and relatively inexpensive technique to raise a target soil volume to a nearly uniform temperature.

As illustrated in the figure below, steam is introduced to the soil through injection wells screened in contaminated intervals. The vacuum applied to the extraction wells, during and after steam/hot air injection, forms a pneumatic barrier at the treatment boundaries. This barrier limits lateral migration of steam and contaminants while air sweeping the steam zone boundaries carries contaminants to extraction wells.

Groundwater and liquid contaminants are pumped from the extraction wells; steam, air, and vaporized contaminants are extracted under vacuum. After the soil is heated by steam injection, the injection wells can introduce additional agents to facilitate the cleanup.

Recovered vapors pass through a condenser. The resulting condensate is combined with pumped liquids for processing in separation equipment. Separated nonaqueous phase liquids (NAPL) can be recycled or disposed of, and the water is treated prior to discharge. The noncondensible gases are directed to a vapor treatment system consisting of (1) catalytic oxidation equipment, (2) activated carbon filters, or (3) other applicable vapor technologies. The in situ thermal extraction process uses conventional injection, extraction and monitoring wells, off-the-shelf piping, steam generators,

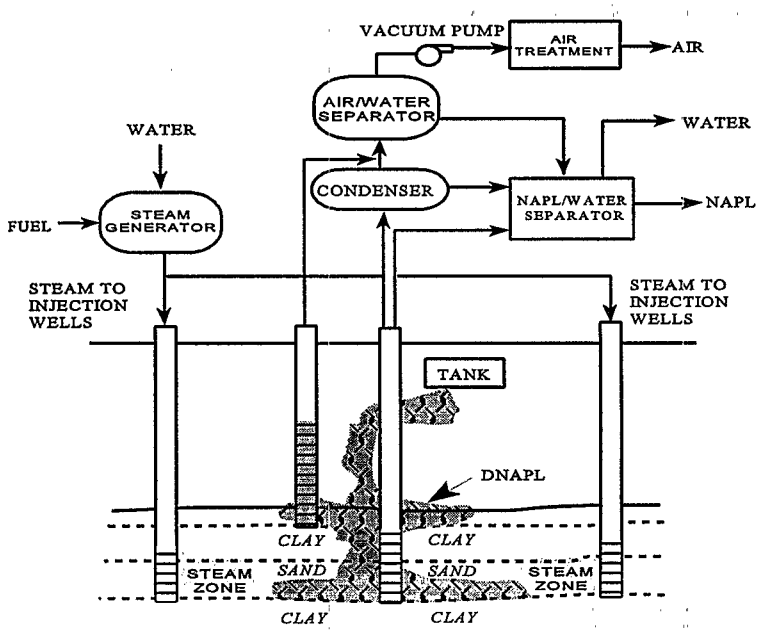

In Situ Thermal Extraction Process

The SITE Program assesses but does not approve or endorse technologies.

condensers, heat exchangers, separation equipment, vacuum pumps, and vapor emission control equipment.

WASTE APPLICABILITY:

The in situ thermal extraction process removes VOCs and SVOCs from contaminated soils and groundwater. The process primarily treats chlorinated solvents such as trichloroethene (TCE), tetrachloroethene (PCE), and dichlorobenzene; hydrocarbons such as gasoline, diesel, and jet fuel; and mixtures of these compounds.

The process can be applied to rapid cleanup of source areas such as dense NAPL pools below the water table surface, light NAPL pools floating on the water table surface, and NAPL contamination remaining after using conventional pumping techniques. Subsurface conditions are amenable to biodegradation of residual contaminants, if necessary, after application of the thermal process. A cap is required for implementation of the process near the soil surface. For dense NAPL compounds in high concentrations, a barrier must be present or created to prevent downward percolation of the NAPLs. The process is applicable in less permeable soils with the use of novel delivery systems such as horizontal wells or fracturing.

STATUS:

This technology was accepted into the SITE Demonstration Program in August 1993. The demonstration occurred at a former waste management area located at Operable Unit 2 at Hill Air Force Base in Ogden, Utah, during June and July 1997. The demonstration site was the location of two former unlined trenches that received unknown quantities of various chlorinated solvent wastes from 1967 to 1975.

The demonstration focused primarily on assessing and recovering dense NAPL from the trough area and reducing TCE and PCE levels in the lower saturated zone so as to meet or exceed the Record of Decision (ROD) cleanup goals and the Preliminary Remedial Goals (PRG) established for the site's soils. Soil PRGs for TCE and PCE were 58 milligrams per kilogram (mg/Kg) and 12 mg/Kg respectively. A total of 41 post-characterization soil samples were collected to determine if these goals were met by the technology. Thirty-five of the 41 samples had PCE concentrations below the PRG. Thirty-five of the 41 samples also had TCE concentrations below the PRG. There were 33 samples that had both TCE and PCE concentrations below the specified PRGs. Detailed reports on the demonstration are in preparation and will be available from EPA in 1999. The developer is presently seeking patents on various aspects of the system, while continuing to seek opportunities at other U.S. Department of Defense facilities.

FOR FURTHER INFORMATION:

EPA PROJECT MANAGER:
Paul dePercin
U.S. EPA
National Risk Management Research Laboratory
26 West Martin Luther King Drive
Cincinnati, OH 45268
513-569-7797
Fax: 513-569-7105
E-Mail: dePercin.Paul@epamail.epa.gov

TECHNOLOGY DEVELOPER CONTACTS:
Lloyd Stewart
Praxis Environmental Technologies, Inc.
1440 Rollins Road
Burlingame, CA 94010
650-548-9288
Fax: 650-548-9287
E-mail: LDS@praxis-enviro.com

Major Paul B. Devane
U.S. Air Force Research Laboratory,
Environics Directorate
139 Barnes Drive, Suite 2
Tyndall AFB, FL 32403-5319
850-283-6288

The SITE Program assesses but does not approve or endorse technologies.

PROCESS TECHNOLOGIES INCORPORATED
(Photolytic Destruction of Vapor-Phase Halogens)

TECHNOLOGY DESCRIPTION:

The proprietary, nonthermal technology developed by Process Technologies Incorporated (PTI), is a method of photochemically oxidizing gaseous organic compounds within a reaction chamber. PTI's Photolytic Destruction Technology (PDT) uses low-pressure ultraviolet (UV) lamps, with UV emissions primarily at wavelengths in the 185 to 254 nanometer range, located within the reaction chamber. Photons emitted from these lamps break apart the chemical bonds making up the volatile organic compound (VOC) molecule. The process is capable of destroying mixtures of chlorinated and nonchlorinated VOCs.

The PDT system is designed and fabricated in 3- to 12-cubic-feet-per-minute (cfm) modules. The size of the module applied is dependent on the gas flow rate and VOC concentrations in the gas stream. PTI implements a fluid bed concentrator to allow for the treatment of high flow gas streams, or those with rates greater than 1,000 cfm. Significant cost savings can be realized ifthe gas flow can be reduced, and concentration increased prior to destruction.

PTI uses a proprietary reagent that forms a liner within the process chamber. The reagent reacts chemically with the gaseous degradation products formed during the photolytic destruction of halocarbon molecules to form solid, stable reaction products.

Reagent lifetime depends on flow rate, influent concentrations, and specific chemical composition of destruction targets. PTI has performed tests on spent reagent to determine whether the material would be classified as a hazardous waste under federal regulations. Those tests indicated that the spent reagent is likely nontoxic. The spent reagent is also not reactive, corrosive, or flammable, and thus PTI is confident that it is not a hazardous waste under federal law. PTI accordingly believes that the spent reagent material can be disposed of as ordinary solid waste or used as a feedstock for

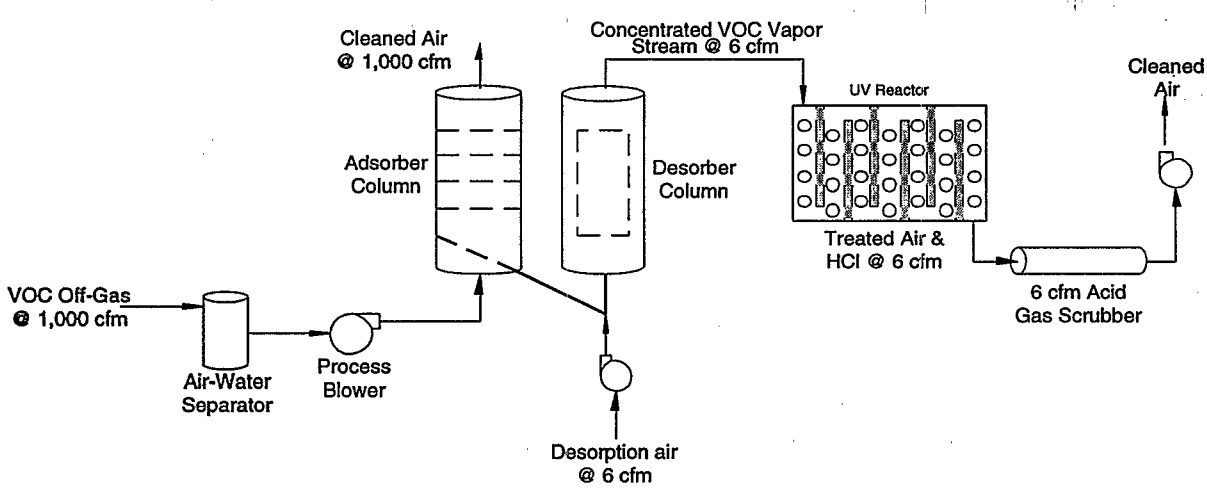

Simplified Process Flow Diagram
of Photolytic Destruction

The SITE Program assesses but does not approve or endorse technologies.

cement manufacturing. The PTI process is simple in design and easy to operate. The sy stem is designed to run continuously, 24-hours per day.

WASTE APPLICABILITY:

The technology was developed to destroy a number of groups of compounds, including chlorinated solvents, chlorofluorocarbons (CFCs), hydrochlorofluorocarbons (HCFCs), and halons. Example sources of process off-gas that contains chlorinated and nonchlorinated VOCs, CFCs, and HCFCs include steam vapor extraction, tank vents, air strippers, steam strippers, and building vent systems.

The process is capable of destroying as high as 50,000 parts per million by volume VOC streams. The system is capable of achieving greater than 90 percent on-line availability, inclusive of scheduled maintenance activities.

STATUS:

The PTI technology was accepted into the SITE Demonstration Program in summer 1994. The demonstration began in September 1994 at McClellan Air Force Base (AFB) in Sacramento, California. The SITE demonstration was postponed shortly thereafter. Activities under the SITE Program were rescheduled in 1997. Additional tests incorporating an improved design for treating soil vapor extraction off-gas were successfully completed at the AFB in January 1996.

PTI completed a four month demonstration of the combined fluid bed concentrator and PDT system at the U.S. Navy's North Island Site 9 in February, 1998. This demonstration was performed to evaluate the effectiveness and cost to remove and destroy VOC vapor from an existing SVE system. The results of the demonstration at the Navy's North Island Site 9 showed the PTI System was capable of achieving greater than 95 percent destruction and removal efficiency of VOCs in the soil vapor at a 250 standard cfm flow rate. Furthermore, the Navy determined that the PTI System provided a 45 percent cost savings over activated carbon or flameless thermal oxidation.

FOR FURTHER INFORMATION:

EPA PROJECT MANAGER:
Paul de Percin
U.S. EPA
National Risk Management Research Laboratory
26 West Martin Luther King Drive
Cincinnati, OH 45268
513-569-7797
Fax: 513-569-7105
E-Mail: dePercin.Paul @ epamail.epa.gov

TECHNOLOGY DEVELOPER CONTACT:
Mike Swan
Process Technologies Incorportated
P.O. Box 476
Boise, ID 83701-0476
208-385-0900 ext. 223
Fax: 208-385-0994

TECHNOLOGY USER CONTACT:
Kevin Wong
SM-ALC/EMR
5050 Dudley Boulevard
Suite 3
McClellan AFB, CA 95652-1389
916-643-0830 ext. 327
Fax: 916-643-0827

The SITE Program assesses but does not approve or endorse technologies.

RECYCLING SCIENCES INTERNATIONAL, INC.
(Desorption and Vapor Extraction System)

TECHNOLOGY DESCRIPTION:

The mobile desorption and vapor extraction system (DAVES) uses a low-temperature fluidized bed to remove organic and volatile inorganic compounds from soils, sediments, and sludges. This system can treat materials with 85 percent solids at a rate of 10.5 tons per hour.

Contaminated materials are fed into a co-current, fluidized bed dryer, where they are mixed with hot air (about 1,000 to 1,400 °F) from a gas-fired heater. Direct contact between the waste material and the hot air forces water and contaminants from the waste into the gas stream at a relatively low fluidized-bed temperature (about 320 °F). The heated air, vaporized water and organics, and entrained particles flow out of the dryer to a gas treatment system.

The gas treatment system removes solid particles, vaporized water, and organic vapors from the air stream. A cyclone separator and baghouse remove most of the particulates. Vapors from the cyclone separator are cooled in a venturi scrubber, countercurrent washer, and chiller section before they are treated in a vapor-phase carbon adsorption system. The liquid residues from the system are centrifuged, filtered, and passed through two activated carbon beds arranged in series (see photograph below).

By-products from the DAVES include (1) treated, dry solids representing about 96 to 98 percent of the solid waste feed, (2) a small quantity of centrifuge sludge containing organics, (3) a small quantity of spent adsorbent carbon, (4) wastewater that may need further treatment, and (5) small quantities of baghouse and cyclone dust that are recycled through the process.

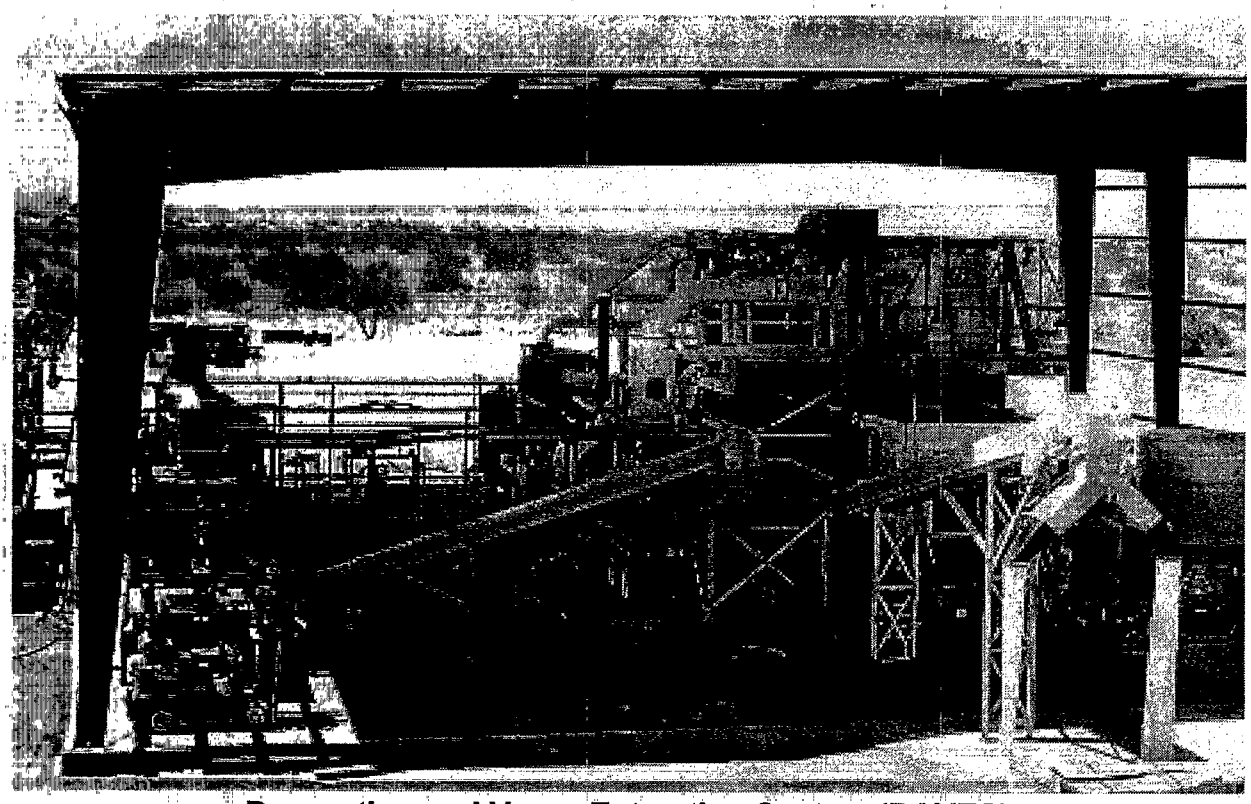

Desorption and Vapor Extraction System (DAVES)

The SITE Program assesses but does not approve or endorse technologies.

The centrifuge sludge can be bioremediated, chemically degraded, or treated in another manner. Recycling Sciences International, Inc., has patented an electrochemical oxidation process (ECO) and is developing this process as an adjunct to the DAVES. The ECO is designed to detoxify contaminants within the DAVES in a closed-loop system.

WASTE APPLICABILITY:

This technology removes the following contaminants from soil, sludge, and sediment: volatile and semivolatile organics, including polychlorinated biphenyls (PCB), polynuclear aromatic hydrocarbons, pentachlorophenol, volatile inorganics such as tetraethyl lead, and some pesticides. In general, the process treats waste containing less than 10 percent total organic contaminants and 30 to 95 percent solids. The presence of nonvolatile inorganic contaminants (such as metals) in the waste feed does not inhibit the process; however, these contaminants are not treated.

This technology was accepted into the SITE Program in April 1995. EPA is selecting a demonstration site for this process. Preferred demonstration wastes include harbor or river sediments containing at least 50 percent solids contaminated with PCBs and other volatile or semivolatile organics. Soils with these characteristics may also be acceptable. About 300 tons of waste is needed for a 2-week test. Major test objectives are to evaluate feed handling, decontamination of solids, and treatment of gases generated by the process.

FOR FURTHER INFORMATION:

EPA PROJECT MANAGER:
Richard Eilers
U.S. EPA
National Risk Management Research Laboratory
26 West Martin Luther King Drive
Cincinnati, OH 45268
513-569-7809
Fax: 513-569-7111

TECHNOLOGY DEVELOPER CONTACT:
William Meenan
Recycling Sciences International, Inc.
175 West Jackson Boulevard
Suite A1934
Chicago, IL 60604-2601
312-663-4242
Fax: 312-663-4269

The SITE Program assesses but does not approve or endorse technologies.

ROCKY MOUNTAIN REMEDIATION SERVICES, L.L.C.
(ENVIROBOND™ SOLUTION)

TECHNOLOGY DESCRIPTION:

ENVIROBOND™ is a proprietary solution that binds with metals in contaminated soils and other wastes to form a virtually impenetrable chemical bond. Rocky Mountain Remediation Services, L.L.C., claims that the treatment process effectively prevents metals leaching and can be used with mechanical compaction to reduce the overall volume of contaminated media by 30 to 50 percent. The process generates no secondary wastes and requires minimal handling, transportation, and disposal costs. In addition, unlike some pozzolanic-based reagents, the ENVIROBOND™ liquid is safe to handle and does not generate any emissions.

ENVIROBOND™ consists of a mixture of additives containing oxygen, sulfur, nitrogen, and phosphorous; each additive has an affinity for a specific class of metals. ENVIROBOND™ converts metal contaminants from their leachable form to an insoluble, stable, nonhazardous metallic complex. ENVIROBOND™ is essentially a ligand that acts as a chelating agent. In the chelation reaction, coordinate bonds attachthe metal ion to least two ligand nonmetal ions to form a heterocyclic ring. The resulting ring structure is inherently more stable than simpler structures formed in other binding processes. By effectively binding the metals, the process reduces the waste stream's RCRA toxicity characteristic leaching procedure (TCLP) test results to less than the RCRA-regulated levels, subsequently reducing the risks posed to human health and the environment.

The stabilized waste can then be placed in a pit or compacted into the earth using traditional field compaction equipment, or it can be mechanically compacted to produce a solid, compressed form called ENVIROBRIC™. The machine used to form the ENVIROBRIC™ is designed for mass production of sand-clay "rammed earth" bricks. Unlike conventional construction bricks, rammed earth bricks are produced under extremely high compaction forces and are not heated or fired. As a result, the bricks possess very high compressive strength and a correspondingly low porosity, making them ideal for on-site treatment by solidification/stabilization at industrial sites. The size of the individual bricks can be adjusteddepending on specific site requirements, and the bricks have successfully passed various tests designed to measure their long-term durability.

WASTE APPLICABILITY:

The ENVIROBOND™ process does not reduce the overall concentration of metal contaminants; instead it converts them to metal-ligand compounds, rendering them insoluble and stable in the media. The developer claims that the process can be applied to contaminated soils and other media in both industrial and residential use scenarios. At residential sites, contaminated soil can be mixed with ENVIROBOND™ and stabilized before being disposed of off site. At industrial sites, ENVIROBOND™ can be mixed with contaminated waste streams or soils and then compacted in the ENVIROBRIC™ process and backfilled on site to reduce the overall volume of contaminated media.

Bench-scale and field tests indicate that ENVIROBOND™ can be added to waste streams containing more than four metal contaminants at concentrations ranging from 200 to more than 5,000 parts per million (ppm). TCLP tests have

The SITE Program assesses but does not approve or endorse technologies.

shown that metals concentrations in leachate from treated media do not exceed RCRA regulatory levels. Metals that can be stabilized with ENVIROBOND™ include arsenic, barium, cadmium, chromium, lead, mercury, nickel, selenium, silver, and zinc. However, the process is less effective in media containing more than 3 percent by weight of metals such as aluminum, magnesium, calcium, and manganese. These metals may reduce the number of chelating sites available by preferentially binding with the ENVIROBOND™ agent.

The ENVIROBOND process is capable of achieving high processing rates of 20 to 40 tons per hour and can be used with contaminated media containing as much as 10 percent debris and other matter. For acidic wastes with a pH of 3 or less, buffering compounds can be added to the contaminated media before it is mixed with ENVIROBOND™. Volatile organic compounds such as benzene, toluene, ethylbenzene, and xylenes do not affect the process.

STATUS:

Under a cooperative agreement with the Ohio EPA, the ENVIROBOND™ process was demonstrated in September 1998 at two separate areas of the Crooksville/Roseville Pottery site in Ohio. Soil at the site, some of it adjacent to residential areas, is contaminated with lead from waste disposal practices associated with pottery production operations. Soil at the demonstration areas contains lead in concentrations ranging from 100 ppm to 80,000 ppm. The objective of the demonstration was to determine if the ENVIROBOND™ process can reduce the bioavailability of lead in the soil by 25 percent. Results of the demonstration will be available in early 1999.

FOR FURTHER INFORMATION:

EPA PROJECT MANAGER:
Ed Barth
U.S. EPA
National Risk Management Research Laboratory
26 West Martin Luther King Drive
Cincinnati, OH 45268
513-569-7669
Fax: 513-569-7585

TECHNOLOGY DEVELOPER CONTACT:
James M. Barthel
Director of Business Development
Rocky Mountain Remediation Services, L.L.C.
1819 Denver West Drive, Building 26, Suite 200
Golden, CO 80401
303-215-6620
Fax: 303-215-6720

The SITE Program assesses but does not approve or endorse technologies.

SANDIA NATIONAL LABORATORIES
(In Situ Electrokinetic Extraction System)

TECHNOLOGY DESCRIPTION:

Electrokinetic remediation has been used successfully to treat saturated soils contaminated with heavy metals. At some sites, however, it may not be desirable to add the quantities of water needed to saturate a contamination plume in the vadose zone. Sandia National Laboratories (SNL) has developed an electrokinetic remediation technology that can be used in unsaturated soils without adding significant amounts of water.

The SNL electrokinetic extraction system, shown in the figure below, consists of three main units: the electrode assembly (electrode casing and internal assemblies), the vacuum system, and the power supply. The electrode casing consists of a porous ceramic end that is 5 to 7 feet long and has an outer diameter of 3.5 inches. During field installation, the casing is attached to the required length of 3-inch polyvinyl chloride pipe. The electrode internal assembly consists of the drive electrode, a water level control system, and a pump system. The vacuum system consists of a venturi vacuum pump and vacuum regulator that together supply a constant vacuum for the electrode. Up to four 10,000-watt power supplies can operate in either constant voltage or constant current mode.

When the drive electrode is energized, contaminants and other ions are attracted into the electrode casing. The water level control system

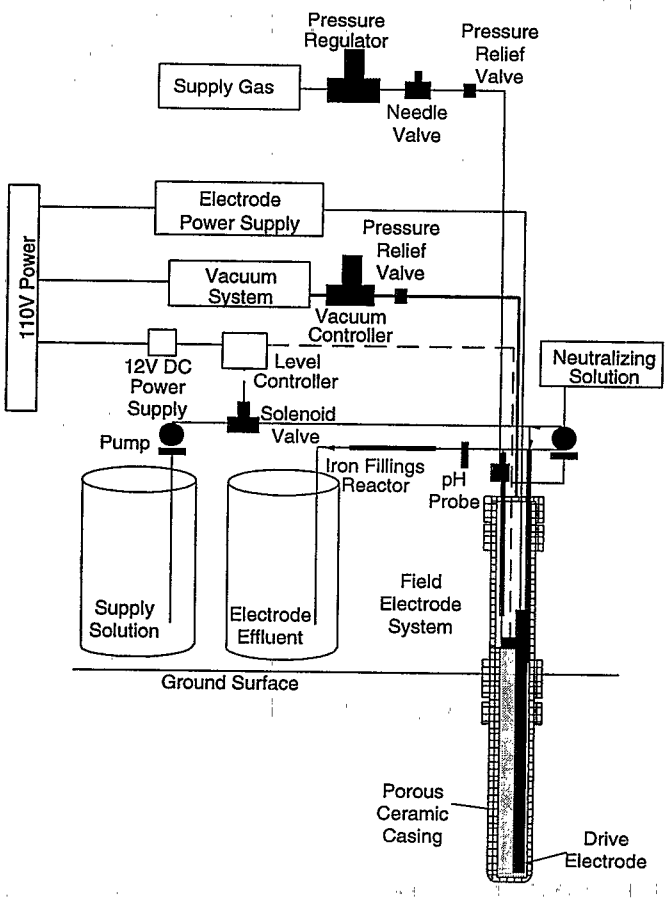

Schematic Diagram of the In Situ Electrokinetic Extraction System

The SITE Program assesses but does not approve or endorse technologies.

adds water to, and extracts water from, the electrodes. Water is supplied to the electrode from a supply solution tank at the ground surface. This solution is either drawn into the electrode by the vacuum maintained in the electrode or by a supply pump. At the same time, water is continuously pumped out from the electrode casing at a constant rate. Part of the contaminated water is sent to an effluent waste tank at the ground surface; the remainder is returned to the electrode to maintain circulation of the fluid surrounding the electrode. A metering pump controlled by in-line pH meters regulates the introduction of neutralization chemicals to each electrode. Process control and monitoring equipment is contained in a 10-foot-by-40-foot instrument trailer.

WASTE APPLICABILITY:

SNL has developed its electrokinetic extraction system to treat anionic heavy metals such as chromate in unsaturated soil. There is no lower limit to the contaminant concentration that can be treated; however, there may be a lower limit on the ratio of contaminant ions to other ions in the soil.

The technology can be expanded to treat saturated soils. Soil that is highly conductive because of a high salinity content is not suitable for this technology. In addition, sites with buried metal debris, such as pipelines, are not appropriate.

STATUS:

This technology was accepted into the SITE Demonstration Program in summer 1994. The SITE demonstration began May 1996, at an unlined chromic acid pit within a SNL RCRA regulated landfill. The operation was completed in November 1996 and site closure was completed in April 1997, with a closure report submitted to New Mexico state regulators in September 1997.

The demonstration verified the technology's capability of removing anionic contaminants from vadose zone soil through passive operation. Over 600 grams of hexavalent chromium were removed by the technology during the demonstration, equaling out to about 8 milligrams of chromium removed per kilowatt hour. Reports on the demonstration are in final preparation and should be available from EPA in early 1999.

FOR FURTHER INFORMATION:

EPA PROJECT MANAGER:
Randy Parker
U.S. EPA
National Risk Management Research Laboratory
26 West Martin Luther King Drive
Cincinnati, OH 45268
513-569-7271
Fax: 513-569-7571

TECHNOLOGY DEVELOPER CONTACTS:
Eric Lindgren
Sandia National Laboratories
Mail Stop 0719
P.O. Box 5800
Albuquerque, NM 87185-0719
505-844-3820
Fax: 505-844-0543
E-mail: erlindg@sandia.gov

Earl D. Mattson
Sat-UnSat Inc.
12004 Del Rey NE
Albuquerque, NM 87122
505-856-3311

The SITE Program assesses but does not approve or endorse technologies.

SELENTEC ENVIRONMENTAL TECHNOLOGIES, INC.
(Selentec MAG*SEP^{SM} Technology)

TECHNOLOGY DESCRIPTION:

The MAG*SEP^{SM} process uses the principles of chemical adsorption and magnetism to selectively bind and remove heavy metals or radionuclides from aqueous solutions such as groundwater, wastewater, and drinking water. Contaminants are adsorbed on specially formulated particles which have a core made from magnetic material; these particles are then separated (along with the adsorbed contaminants) from the solution using a magnetic filter or magnetic collector. The magnetic core has no interaction with the contaminant.

The proprietary adsorbing particles are made of a composite of organic polymers and magnetite. The particles can be manufactured in two forms: one with an ion exchanger and/or chelating functional group attached to the particle surface (amidoxime functionalized resin), or one with inorganic adsorbers bound to the surface of the particles (clinoptilolite). These particles have high surface areas and rapid adsorption kinetics.

A typical MAG*SEP^{SM} treatment system consists of:

- a particle contact zone
- a particle handling system, including particle injection components, a magnetic separator, and particle reclaim components
- a particle regeneration system (where applicable)

The process stream enters a contact zone (usually a tank - other configurations are used for particular applications) where MAG*SEP^{SM} particles are injected and mixed. The contact zone provides the necessary solution flow characteristics and contact time with the particles to ensure that the contamination will be adsorbed onto the active surface sites of the particles. The mixture then flows through a magnetic collector, where the contaminated particles are retained while the treated process stream passes through (see figure below).

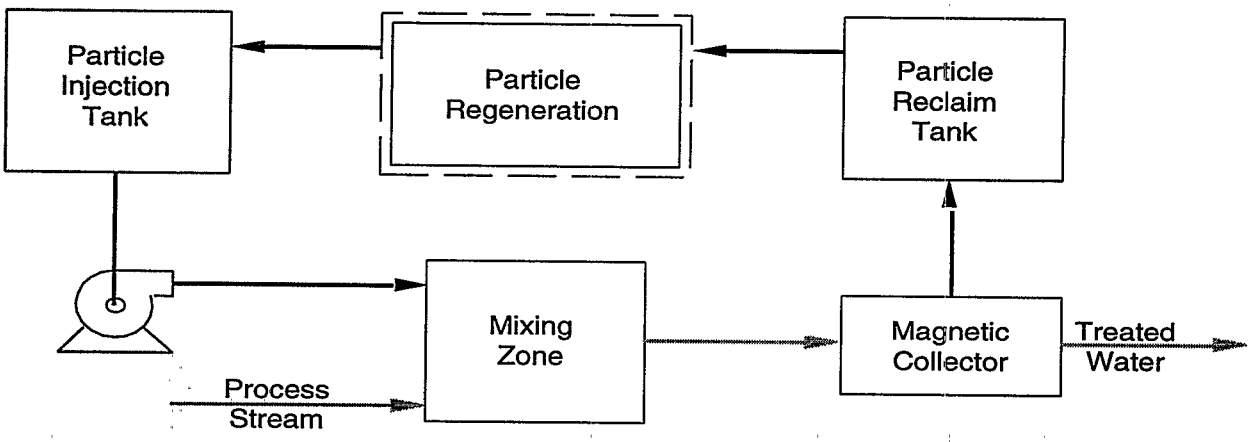

Schematic Diagram of the Mag*SEP^{SM} Treatment System

The SITE Program assesses but does not approve or endorse technologies.

Depending on the application, type of particle, and contaminant concentration, the particles may be re-injected into the flow stream, collected and disposed of, or regenerated and reused. The regeneration solution is processed to recover (concentrate and remove) the contaminants and may be recycled.

The MAG*SEP^{SM} process is able to selectively remove (either ex situ or in situ) the following contaminants from aqueous solutions: titanium, copper, cadmium, arsenic, cobalt, molybdenum, platinum, selenium, chromium, zinc, gold, iodine, manganese, technetium, mercury, strontium, iron, ruthenium, thallium, cesium, cobalt, palladium, lead, radium, nickel, silver, bismuth, thallium, antimony, zirconium, radium, cerium, and all actinides. The process operates at flow rates up to 2,000 gallons per minute (gpm).

WASTE APPLICABILITY:

The MAG*SEP^{SM} technology reduces heavy metal and radionuclide contamination in water and wastewater. The technology has specific applications in environmental remediation and restoration, treatment of acid mine drainage, resource recovery, and treatment of commercial industrial wastewater. MAG*SEP^{SM} particles can be produced to incorporate any known ion exchanger or sorbing material. Therefore, MAG*SEP^{SM} can be applied in any situation where conventional ion exchange is used.

STATUS:

The MAG*SEP^{SM} technology was accepted into the SITE Program in 1996 and is also one of 10 technologies participating in the White House's Rapid Commercialization Initiative. In addition, in 1997 the MAG*SEP^{SM} technology received a Research and Development (R&D) 100 Award from the R&D trade publication as one of the 100 Most Technologically Significant New Products of 1997.

Selentec has completed a demonstration of the MAG*SEP^{SM} technology at the U.S. Department of Energy's Savannah River Site. Heavy metal concentrations in coal pile runoff water were significantly reduced to below drinking water standards. Another demonstration of the technology is planned for Savannah River whereby radioactive cesium will be removed streams. The technology is also being used to remove mercury from heavy water drums at Savannah River.

The first commercial unit of the MAG*SEP^{SM} technology was put into service on November 18, 1998, at a dairy in Ovruch, Ukraine. For this application, the unit is removing radioactive cesium from contaminated milk produced near the Chernobyl Nuclear Reactor Plant.

FOR FURTHER INFORMATION:

EPA PROJECT MANAGER:
Randy Parker
U.S. EPA
National Risk Management Research Laboratory
26 West Martin Luther King Drive
Cincinnati, OH 45268
513-569-7271
Fax: 513-569-7620

TECHNOLOGY DEVELOPER CONTACT:
Steve Weldon
Selentec Environmental Technologies, Inc.
8601 Dunwoody Place, Suite 302
Atlanta, GA 30350-2509
770-640-7059
Fax: 770-640-9305
E-Mail: info@selentec.com
Home Page: www.selentec.com

The SITE Program assesses but does not approve or endorse technologies.

SEVENSON ENVIRONMENTAL SERVICES, INC.
(MAECTITE® Chemical Treatment Process)

TECHNOLOGY DESCRIPTION:

The patented MAECTITE® chemical treatment process for lead and other heavy metals uses reagents and processing equipment to render soils, waste, and other materials nonhazardous when tested by the Resource Conservation and Recovery Act toxicity characteristic leaching procedure (TCLP). The MAECTITE® process reduces leachable lead, hexavalent chromium, and other heavy metals to below treatment standards required by land-ban regulations. Lead in treated material, as determined by approved EPA methods (such as the TCLP, extraction procedure toxicity test, and the multiple extraction procedure), complies with limits established by EPA. The photograph below shows a 500-ton-per-day ex situ unit.

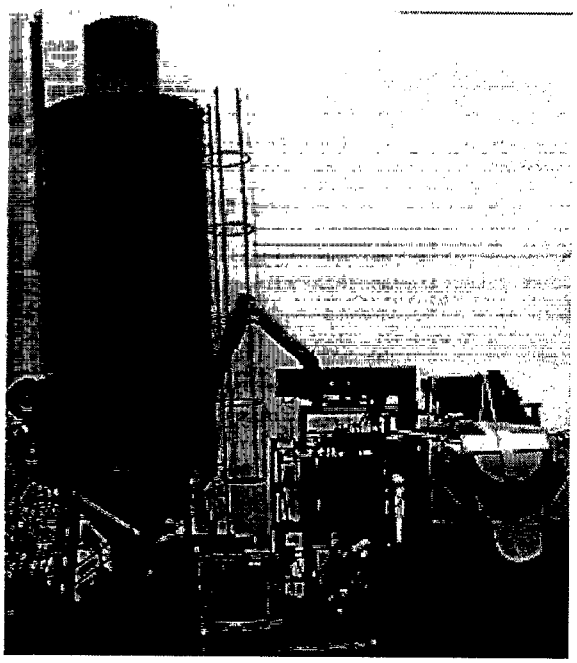

500-Ton-Per-Day MAECTITE® Processing System

Chemical treatment by the MAECTITE® process converts leachable lead into insoluble minerals and mixed mineral forms within the material or waste matrix. MAECTITE® reagents stimulate the nucleation of crystals by chemical bonding to yield mineral compounds in molecular forms. These forms are resistant to leaching and physical degradation from environmental forces. The durability of traditional monolithic solidification-stabilization process end-products is often measured by geotechnical tests such as wet-dry, freeze-thaw, permeability, and unconfined compressive strength. The MAECTITE® process does not use physical binders, is not pozzolanic or siliceous, and does not rely on the formation of metallic hydroxides using hydration mechanisms. Therefore, these tests are not relevant to MAECTITE® product chemical stability, although engineered properties are readily obtained, if required. MAECTITE® is not pH dependent and does not use adsorption, absorption, entrapment, lattice containment, encapsulation, or other physical binding principles. The technology is a true chemical reaction process that alters the structure and properties of the waste, yielding stable compounds.

The MAECTITE® process uses water to assist in dispersing reagents. However, the dehydration characteristic of the process liberates water present in waste prior to treatment (absorbed and hydrated forms) to a free state where it can be removed from the waste matrix by evaporation and capillary drying principles. The ability of treated material to readily lose water, the formation of dense mineral crystals, and the restructuring of the material as a result of MAECTITE® treatment (where interstitial space is minimized), all contribute to reduced waste volume and weight.

Ex situ MAECTITE® processing equipment generally consists of material screening and sizing components, liquid and solid reagent storage delivery subsystems, and a mixing unit such as a pug mill. Equipment is mobile but can

The SITE Program assesses but does not approve or endorse technologies.

be modified for fixed system operations. In situ MAECTITE® processing equipment is also available; system selection is largely dictated by contaminant plume configuration, soil characteristics, and site space limitations.

WASTE APPLICABILITY:

Materials that have been rendered nonhazardous include soils; sludges; sediments; battery contents, including casings; foundry sands; and firing range soil. Oversized material can be treated with the process as debris, but size reduction often makes processing more efficient. Even sludges with free liquids (as determined by the paint filter test) have been treated to TCLP compliance when excess fluids are present.

The range of lead levels effectively treated has not been fully determined; however, soils with total lead as high as 30 percent by weight and TCLP values over 15,000 milligrams per liter (mg/L) were not problematic. Common lead levels encountered have averaged from 200 milligrams per kilogram to 6,500 with TCLP concentrations averaging 20 to 400 mg/L. Material geochemistry most often dictates final MAECTITE® treatment designs. Furthermore, correlations between total lead and regulated leachable lead levels are inconsistent, with treatment efforts more strongly related to the geochemical characteristics of the waste material.

STATUS:

The chemical treatment technology was initially accepted into the SITE Demonstration Program in March 1992. EPA is seeking a suitable demonstration site.

Sevenson Environmental Services, Inc. (Sevenson), acquired the MAECTITE® technology in 1993 and was issued second, third and fourth patents in 1995, 1996, and 1997 respectively. Combining ex situ and in situ quantities, over 650,000 tons of material has been successfully processed. Treatability studies have been conducted on over 100 different materials in over 40 states, Canada, Italy, and Mexico. The technology has been applied at full-scale demonstration and remedial projects in over 25 states and in all 10 EPA regions.

The MAECTITE® process has been formally accepted into the EPA PQOPS program for the fixation-stabilization of inorganic species. Proprietary technology modifications have shown promise in rendering radionuclides nonleachable using gamma spectral counting methods on TCLP extract.

FOR FURTHER INFORMATION:

EPA PROJECT MANAGER:
Jack Hubbard
U.S. EPA
National Risk Management Research Laboratory
26 West Martin Luther King Drive
Cincinnati, OH 45268
513-569-7507
Fax: 513-569-7620

TECHNOLOGY DEVELOPER CONTACT:
Charles McPheeters
Sevenson Environmental Services, Inc.
9425 Calumet Avenue, Suite 101
Munster, IN 46321
219-836-0116
Fax: 219-836-2838

The SITE Program assesses but does not approve or endorse technologies.

SIVE SERVICES
(Steam Injection and Vacuum Extraction)

TECHNOLOGY DESCRIPTION:

Steam Injection and Vacuum Extraction (SIVE) uses steam injection wells in conjunction with dual-phase extraction wells for in situ treatment of contaminated soil and groundwater. The injected steam strips volatile and semivolatile organic compounds as it permeates the contaminated zones. The steam increases the subsurface temperature, which increases mass transfer and phase exchange rates, reduces liquid viscosities, and accelerates desorption of contaminants from the matrix. The moisture and warmth provided by the steam also accelerates biodegradation of residual contaminants. As a result, contaminants are extracted or degraded at increased rates as compared to conventional isothermal vapor and liquid extraction systems.

SIVE-LF (Linear Flow) is an enhanced SIVE method designed for relatively shallow depths. With the SIVE-LF process, as illustrated in the figure below, steam is forced to flow horizontally and uniformly from one trench, through the contaminant zone, and into another trench, from which the contaminants are extracted. The large open area of the trench faces allow for high injection and extraction rates, which promote low treatment duration. The trenches also allow for installation of an impermeable barrier, such as a polyethylene liner, against one face of the open trench before the trench is backfilled, thus reducing the flow of injected or extracted fluid outside the area of the targeted zones. A surface covering for the treatment area prevents short-circuiting of the flow of injected steam to the atmosphere, and prevents atmospheric air from entering the extraction trench.

Surface equipment for SIVE includes conventional steam generation and delivery systems, and the vacuum extraction system. The vacuum extraction system includes a vacuum blower, steam condenser, other cooling components, and air emission control devices. The condensate generated by the process requires

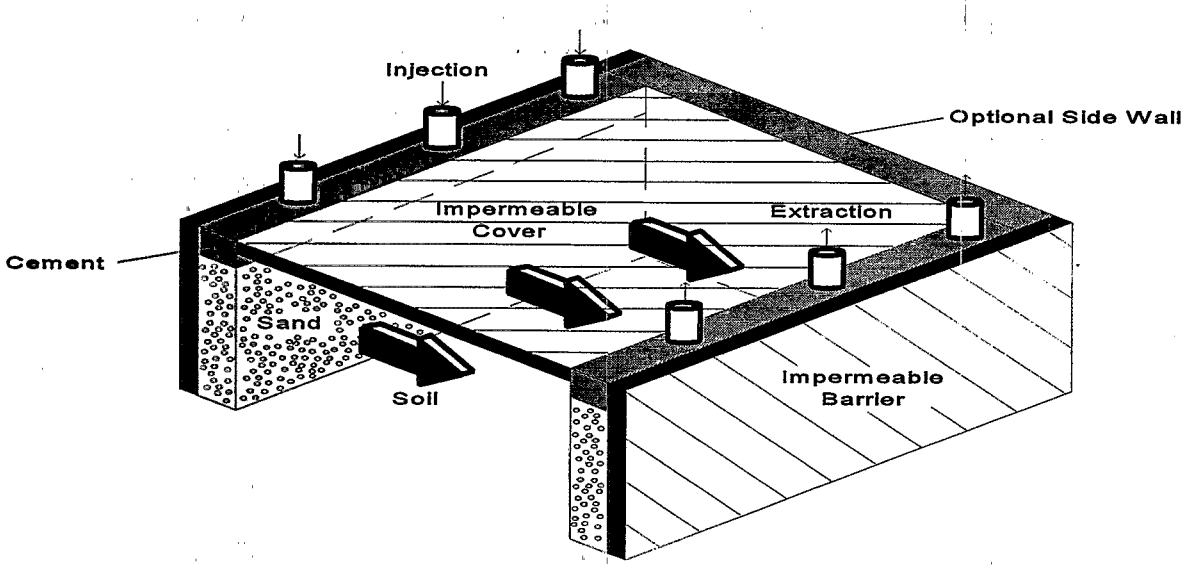

The SIVE-LF Process

The SITE Program assesses but does not approve or endorse technologies.

further treatment or off-site disposal. The reliability of the equipment and automatic controls allows SIVE to operate without constant direct supervision.

WASTE APPLICABILITY:

SIVE may be applied to soil or groundwater contaminated with fuels, industrial solvents, oils, and other liquid toxics, and may be applied at any depth. The SIVE-LF process is designed to treat to depths of 30 feet. Because highly volatile contaminants are readily air-stripped without the added effects of steam, the steam-stripping effect will be greatest on the heavier, less volatile contaminants. SIVE also effectively removes floating non aqueous-phase liquids from groundwater.

STATUS:

This technology was accepted into the SITE Demonstration Program in summer 1994. A suitable site for the demonstration is being sought, although at this time the project is considered inactive.

FOR FURTHER INFORMATION:

EPA PROJECT MANAGER:
Michelle Simon
U.S. EPA
National Risk Management Research Laboratory
26 West Martin Luther King Drive
Cincinnati, OH 45268
513-569-7469
Fax: 513-569-7676

TECHNOLOGY DEVELOPER CONTACT:
Douglas Dieter
SIVE Services
555 Rossi Drive
Dixon, CA 95620
707-678-8358
Fax: 707-678-2202

The SITE Program assesses but does not approve or endorse technologies.

STAR ORGANICS, L.L.C.
(Soil Rescue Remediation Fluid)

TECHNOLOGY DESCRIPTION:

Star Organics, L.L.C., has developed a liquid remediation solution that binds heavy metal contaminants in soils, sludges, and aqueous solutions. The liquid, called Soil Rescue, consists of organic acids that occur naturally in trace concentrations in soil. The liquid is typically sprayed onto and then tilled into the contaminated media; the application process can be repeated until the metals concentration in the media are reduced to below the applicable cleanup standards. Laboratory and pilot-scale tests have shown that metals concentrations can be reduced to below Research Conservation and Recovery Act (RCRA) regulatory levels.

The Soil Rescue solution does not destroy or remove toxic concentrations of metals. Instead, organic acids in the solution bond with the metals to form more complex metallic compounds in a process known as chelation. Soil Rescue is essentially a ligand that acts as a chelating agent. In the chelation reaction, coordinate bonds attach the metal ion to least two ligand organic compounds to form a heterocyclic ring. The resulting ring structure is inherently more stable than simpler structures formed in other binding processes.

By effectively binding the metals, the process reduces the waste stream's toxicity characteristic leaching procedure (TCLP) test results to less than the RCRA-regulated levels, subsequently reducing the risks posed to human health and the environment. Once the toxic metals are bound to the ligand, the bond appears to be irreversible. The permanence of the bond has been tested using all recognized EPA test procedures for such determinations, including exposure to boiling acids.

The Soil Rescue process offers the following advantages over some treatment options: (1) it minimizes the handling and transport costs associated with treatment and disposal, (2) it requires no air monitoring because it release no emissions, (3) its liquid application procedure minimizes fugitive dust emissions, (4) it generates no effluent, (5) it requires no stockpiling of contaminated soil, and (6) it minimizes exposure risks for workers because it is sprayed directly onto the contaminated media.

WASTE APPLICABILITY:

The Soil Rescue solution has been shown to be effective in reducing concentrations of barium, cadmium, chromium, copper, lead, mercury, selenium, and zinc. In situ remediation of heavy metal contaminated soil may be possible in moderately permeable soils. In dense or heavily compacted soils, the remediation procedure may require soil excavation and application of the Soil Rescue solution to moisten the media, followed by mixing in a rotating cylinder. This procedure can be repeated until the metals concentrations in the soil are sufficiently reduced to allow the soil to be replaced as backfill in its original location. At a soil pH of 5.0, a single application can reduce lead concentrations of 1,000 parts per million (ppm) to below the EPA maximum permissible level; with a second application of the remediation fluid, lead concentrations can be reduced to below the RCRA regulatory limit of 5 ppm.

STATUS:

Under a cooperative agreement with the Ohio EPA, the Soil Rescue technology was demonstrated in September 1998 at two separate areas of the Crooksville/Roseville Pottery site in Ohio. Soil at the site, some of it adjacent to residential areas, is contaminated with lead from waste disposal practices associated with pottery production operations. Soil at the demonstration areas contain lead in concentrations ranging from 100 ppm to 80,000 ppm. The objective of the demonstration was to determine if the Soil Rescue process can reduce the bioavailability of lead in the soil by 25 percent. Results of the demonstration will be available in early 1999.

The SITE Program assesses but does not approve or endorse technologies.

FOR FURTHER INFORMATION:

EPA PROJECT MANAGER:
Ed Barth
U.S. EPA
National Risk Management Research
Laboratory
26 West Martin Luther King Drive
Cincinnati, OH 45268
513-569-7669
Fax: 513-569-7585

TECHNOLOGY DEVELOPER CONTACT:
Phil G. Clarke, President
Star Organics, L.L.C.
3141 Hood Street, Suite 350
Dallas, TX 75219
214-522-0742
Fax: 214-522-0616

The SITE Program assesses but does not approve or endorse technologies.

U.S. AIR FORCE
(Phytoremediation of TCE-Contaminated Shallow Groundwater)

TECHNOLOGY DESCRIPTION:

The U. S. Air Force (USAF) has initiated a field demonstration designed to evaluate the effectiveness of eastern cottonwood trees in remediating shallow groundwater contaminated with trichloroethene (TCE). Using vegetation to remediate contaminated soil and groundwater is known as phytoremediation.

Phytoremediation of groundwater involves planting deep-rooted, water-loving vegetation to reduce contaminant levels in the saturated zone. The USAF's demonstration entails planting and cultivating eastern cottonwood trees over a dissolved TCE plume in a shallow (6 to 11 feet below grade) alluvial aquifer.

The cottonwood trees are expected to bioremediate the contaminated groundwater and any contaminated soil through one or more of the following mechanisms:

- Release of root exudates and enzymes stimulating microbial activity in the rhizosphere and enhancing biochemical transformations of contaminants
- Metabolism or mineralization of contaminants within the vegetative tissues; the contaminated water enters the vegetative tissues by root uptake from the aquifer
- Transpiration of water by the leaves

In essence, the trees are expected to serve as a natural pump-and-treat system.

TCE concentrations in the groundwater, soil from the rhizosphere, and tree tissues will be

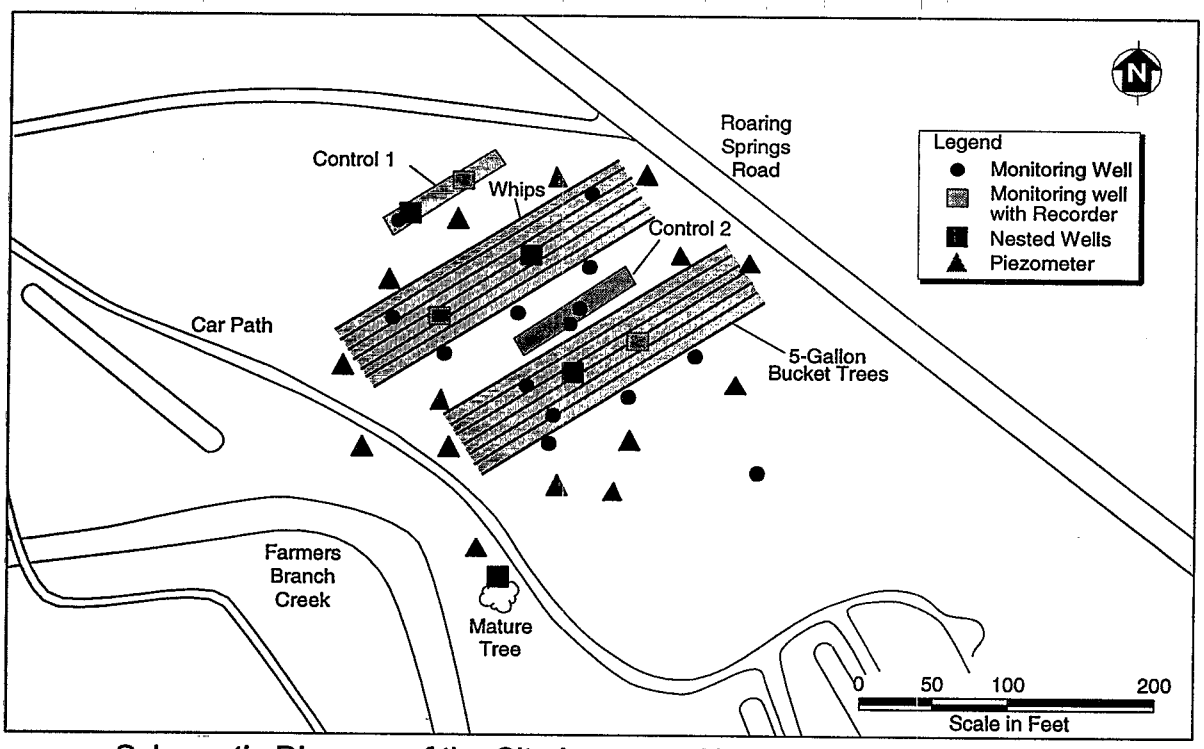

Schematic Diagram of the Site Layout at Navel Air Station Ft. Worth

The SITE Program assesses but does not approve or endorse technologies.

monitored during the demonstration. In general, data will be gathered and interpreted to identify the overall effect of the planted trees on the dissolved TCE plume in the aquifer. Groundwater levels and TCE concentrations in the aquifer will be measured initially to establish baseline conditions and subsequently to map changes in the aquifer throughout the demonstration period. Changes in the flow field and the position of the TCE plume will also be modeled.

TCE concentrations will also be monitored in the soil from the rhizosphere and in the tree tissues. Ratios of daughter and parent compounds will be calculated for groundwater, soil, and tissue samples collected throughout the demonstration period. Microbial activity in the rhizosphere will be monitored and transpiration rates will be measured. These data will be used to determine the fate of the TCE at the site, including those processes that affect its fate.

WASTE APPLICABILITY:

The USAF's phytoremediation technology may be used to remediate shallow groundwater and soil contaminated with TCE, as well as other contaminants common to USAF installations. Such contaminants include petroleum, munitions, and halogenated hydrocarbons. Costs of the technology are limited to initial site preparation, planting, and occasional maintenance (irrigation).

STATUS:

The technology was accepted into the SITE Demonstration Program in 1996. The USAF is currently demonstrating its phytoremediation technology on a TCE plume near Air Force Plant 4 at the Naval Air Station Ft. Worth, formerly Carswell Air Force Base in Fort Worth, Texas. Initial site characterization and final site selection were completed in January 1996. Site development, which included planting trees and installing the irrigation system, was completed in April 1996. The figure on the previous page details the layout of the site. Baseline sampling began in June 1996, and demonstration sampling is scheduled to continue until 2000. Preliminary data may be obtained from either of the below listed contacts.

FOR FURTHER INFORMATION:

EPA PROJECT MANAGER:
Steven Rock
U.S. EPA
National Risk Management Research Laboratory
26 West Martin Luther King Drive
Cincinnati, OH 45268
513-569-7149
Fax: 513-569-7105

AIR FORCE PROJECT MANAGER:
Gregory Harvey
U.S. Air Force
Mail Stop ASC-EMR
1801 10th Street, Building 8, Suite 200
Area B
Wright Patterson Air Force Base, OH 45433
513-255-7716, ext. 302
Fax: 513-255-4155

The SITE Program assesses but does not approve or endorse technologies.

VORTEC CORPORATION
(Vitrification Process)

TECHNOLOGY DESCRIPTION:

Vortec Corporation (Vortec) has developed an oxidation and vitrification process for remediating soils, sediments, sludges, and mill tailings contaminated with organics, inorganics, and heavy metals. The process can vitrify materials introduced as dry granulated materials or slurries.

The figure below illustrates the Vortec vitrification process. Its basic elements include (1) a cyclone melting system (CMS™); (2) a material handling, storage, and feeding subsystem; (3) a vitrified product separation and reservoir assembly; (4) an air preheater (recuperator); (5) an air pollution control subsystem; and (6) a vitrified product handling subsystem.

The Vortec CMS™ is the primary system and consists of two major assemblies: a counterrotating vortex (CRV) reactor and a cyclone melter. First, slurried or dry-contaminated soil is introduced into the CRV. The CRV (1) provides a high temperature environment; (2) preheats the suspended waste materials along with any glass-forming additives mixed with soil; and (3) destroys any organic constituents in the soil. The average temperature of materials leaving the CRV reactor chamber is between 2,200 and 2,800 °F, depending on the melting characteristics of the processed soils.

The preheated solid materials exit the CRV and enter the cyclone melter, where they are dispersed to the chamber walls to form a molten glass product. The vitrified, molten glass product and the exhaust gases exit the cyclone melter through a tangential exit channel and enter a glass- and gas-separation chamber.

The exhaust gases then enter an air preheater to heat the incoming air and are subsequently delivered to the air pollution control subsystem for particulate and acid gas removal. The molten glass product exits the glass- and gas-separation chamber through the tap and is delivered to a water quench assembly for subsequent disposal.

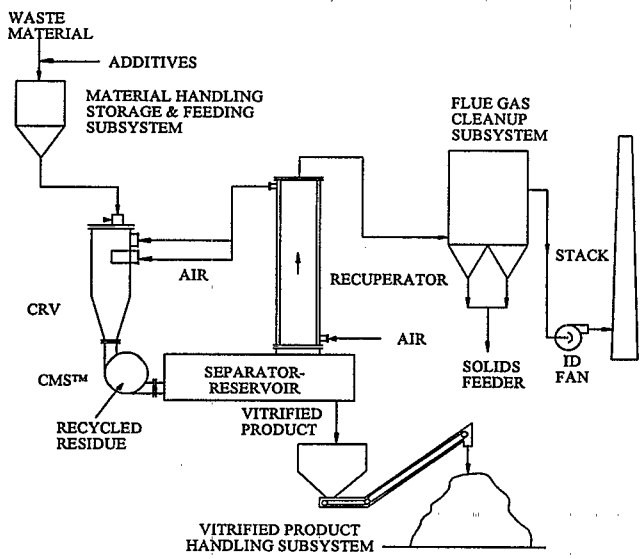

Vortec Vitrification Process

The SITE Program assesses but does not approve or endorse technologies.

Unique features of the Vortec vitrification process include the following:

- Processes solid waste contaminated with both organic and heavy metal contaminants
- Handles waste quantities ranging from 5 to more than 400 tons per day
- Recycles particulate residue collected in the air pollution control subsystem into the CMS™. These recycled materials are incorporated into the glass product.
- Produces a vitrified product that is nontoxic according to EPA toxicity characteristic leaching procedure (TCLP) standards. The product has long- term stability.

WASTE APPLICABILITY:

The Vortec vitrification process treats soils, sediments, sludges, and mill tailings containing organic, inorganic, and heavy metal contamination. Organic materials included with the waste are successfully destroyed by the high temperatures in the CRV. The inorganic constituents in the waste material determine the amount and type of glass-forming additives required to produce a vitrified product. This process can be modified to produce a glass cullet that consistently meets TCLP requirements.

STATUS:

The Vortec vitrification process was accepted into the SITE Emerging Technology Program in May 1991. Research under the Emerging Technology Program was completed in winter 1994, and Vortec was invited to participate in the SITE Demonstration Program.

Construction of a 1.5-ton-per-hour, transportable system for treating contaminated soil at a Department of Energy site in Paducah, Kentucky, was initiated in October 1996. A SITE demonstration is expected to occur in early 1999.

A 50-ton-per-day system has been purchased by Ormet Aluminum Corporation of Wheeling, West Virginia for recycling aluminum spent pot liners, which are considered cyanide- and fluoride-containing wastes (K088). The recycling system became operational in 1996. Vortec is offering commercial systems and licenses for the CMS™ system.

FOR FURTHER INFORMATION:

EPA PROJECT MANAGER:
Teri Richardson
U.S. EPA
National Risk Management Research Laboratory
26 West Martin Luther King Drive
Cincinnati, OH 45268
513-569-7949
Fax: 513-569-7105

TECHNOLOGY DEVELOPER CONTACT:
James Hnat
Vortec Corporation
3770 Ridge Pike
Collegeville, PA 19426-3158
610-489-2255
Fax: 610-489-3185

The SITE Program assesses but does not approve or endorse technologies.

Documents Available from the
US EPA National Risk Management Research Laboratory
Superfund Technology Demonstration Division
General Publications

- SITE Program: Annual Report to Congress 1994 (EPA/540/R-95/522)
- SITE Profiles, Seventh Edition (EPA/540/r-94/526)
- Survey of Materials Handling Technologies Used at Hazardous Waste Sites (EPA/540/2-91/010)
- Interim Status Report U.S. and German bilateral Agreement on Remediation of Hazardous Waste Sites (EPA/540/R-94/500)

Demonstration Project Results

Accutech Remedial Systems, Inc.--Pneumatic Fracturing Extraction and Hot Gas Injection, Phase 1

- Technology Evaluation (EPA/540/R-93/509) PB93-216596
- Technology Demo. Summary (EPA/540/SR-93/509)[3]
- Demonstration Bulletin (EPA/540/MR-93/509)[3]
- Applications Analysis (EPA/540/AR-93/509)[3] PB94-117439

Advanced Remediation Mixing, Inc. (formerly Chemfix)-Chemical Fixation/Stabilization

- Technology Evaluation Vol. 1 (EPA/540/5- 89/011a)[3] PB91-127696
- Technology Evauation Vol.11 (EPA/540/5-89/011b)[3] PB90-274127
- Applications Analysis (EPA/540/A5-89/011)
- Technology Demo. Summary (EPA/540/S5-89/011)[3]
- Demonstration Bulletin (EPA/540/M5-89/011)[3]

American Combustion, Inc.-Oxygen Enhanced Incineration

- Technology Evaluation (EPA/540/5-89/008)
- Applications Analysis (EPA/540/A5-89/008)
- Technology Demo. Summary (EPA/540/S5-89/008)[3]
- Demonstration Bulletin (EPA/540/M5-89/008)[3]

AWD Technologies, Inc.- Integrated Vapor Extraction and Steam Vacuum Stripping

- Applications Analysis (EPA/540/A5-91/002) PB92-218379
- Demonstration Bulletin (EPA/540/M5-91/002)[3]

Babcock & Wilcox Co-Cyclone Furnace Vitrification

- Technology Evaluation Vol. 1 (EPA/540/R-92/017A)[3] PB92-222215
- Technology Evaluation Vol. 11 (EPA/540/R-92/017B)[3] PB92-222223
- Applications Analysis (EPA/540/AR-92/017) PB93-122315
- Technology Demo. Summary (EPA/540/SR-92/017)[3]
- Demonstration Bulletin (EPA/540/MR-92/011)

Bergman USA-Soil and Sediment Washing System

- Demonstration Bulletin (EPA/540/MR-92/075)
- Applications Analysis (EPA/540/AR-92/075)

Biogenesis Enterprises, Inc.-Soil and Sediment Washing Processes

- Demonstration Bulletin (EPA/540/MR-93/510)
- Innovative Technology Evaluation Report (EPA/540/R-93/510)
- SITE Technology Capsule (EPA/540/SR-93/510)[3]

Bio-Rem, Inc. - Augmented In-Situ Subsurface Biorem Process

- Demonstration Bulletin (EPA/540/MR-93/527)

BioTrol - Biological Aqueous Treatment System

- Technology Evaluation (EPA/540/5-91/001)[3] PB92-110048
- Applications Analysis (EPA/540/A5-91/001) PB91-227983
- Technology Demo. Summary (EPA/540/S5-91/001)
- Demonstration Bulletin (EPA/540/M5-91/001)

[1] Order documents free of charge by calling EPA's Center for Environmental Research Information (CERI) at 513-569-7562 or Fax 513-569-8695.
[2] Documents with a PB number are out of stock and must be ordered by that number at cost from:
National Technical Information Service
5285 Port Royal Road
Springfield VA 22161
Telephone 703-487-4650
[3] Out of stock

Demonstration Project Results (Continued)

BioTrol - Soil Washing System
- Technology Evaluation Vol. 1 (EPA/540/5-91/003a)[3] PB92-115310
- Technology Evaluation Vol. 11 Part A (EPA/540/5-91/003b)[3] PB92-115328
- Technology Evaluation Vol. 11 Part B (EPA/540/5-91/003c)[3] PB92-115336
- Applications Analysis (EPA/540/A5-91/003)
- Technology Demo. Summary (EPA/540/S5-91/003)
- Demonstration Bulletin (EPA/540/M5-91/003)

Brice Environmental Services Corporation-Bescorp Soil Washing System Battery Enterprises Site
- Demonstration Bulletin (EPA/540/MR-93/503)
- Applications Analysis (EPA/540/A5-93/503)

Brown and Root Environmental-Subsurface Volaitilization and Ventilation System
- Demonstration Bulletin (EPA/540/MR-94/529)
- Capsule (EPA/540/R-94/529a)
- Innovative Tech. Eval. Report (EPA/540/R-94/529)

Canonie Environmental Services Corporation-Low Temperature Thermal Aeration (LTTA)
- Demonstration Bulletin (EPA/540/MR-93/504)
- Applications Analysis (EPA/540/AR-93/504)

CeTech Resources, Inc., formerly Chemfix Technologies, Inc. - Chemical Fixation/Stabilization
- Technology Evaluation Vol. 1 (EPA/540/5-89/011a) PB91-127696
- Technology Evaluation Vol. 11 (EPA/540/5-89/011b) PB90-274127
- Applications Analysis (EPA/540/A5-89/011)
- Technology Demo. Summary (EPA/540/S5-89/011)[3] PB91-921373
- Demonstration Bulletin (EPA/540/M5-89/011)[3]

CF Systems Corporation-Liquified Gas Solvent Extraction
- Technology Evaluation Vol. 1 (EPA/540/5-90/002)
- Technology Evaluation Vol. 11 (EPA/540/5-90/002a)[3] PB90-186503
- Applications Analysis (EPA/540/A5-90/002)
- Technology Demo. Summary (EPA/540/S5-90/002)

Chemfix Technologies, Inc. (Now Advanced Remediation Mixing, Inc.) - Chemical Fixation/Stabilization
- Technology Evaluation Vol. 1 (EPA/540/5- 89/011a) PB91-127696[2]
- Technology Evauation Vol.11 (EPA/540/5-89/011b) PB90-274127[2]
- Applications Analysis (EPA/540/A5-89/011)
- Technology Demo. Summary (EPA/540/S5-89/011) PB91-921373[2]
- Demonstration Bulletin (EPA/540/M5-89/011)[3]

Chemical Waste Management, Inc.-X-TRAX Thermal Desorption System
- Demonstration Bulletin (EPA/540/MR-93/502)

Clean Berkshires, Inc. (Now Maxymillian Technologies)-Thermal Desorption System
- Demonstration Bulletin (EPA/540/MR-94/507)
- Capsule (EPA/540/R-94/507a)[3]

Cognis, Inc. Removal of Lead from Soils
- Demonstration Bulletin (EPA/540/MR-95/535)

Dehydro-Tech Corporation-Carver-Greenfield Process
- Technology Evaluation (EPA/540/R-92/002)[3] PB92-217462
- Applications Analysis (EPA/540/AR-92/002)
- Technology Demo. Summary (EPA/540/SR-92/002)
- Demonstration Bulletin (EPA/540/MR-92/002)

Dupont/Oberlin-Membrane Microfiltration System
- Technology Evaluation (EPA/540/5-90/007)[3] PB92-153410
- Applications Analysis (EPA/540/A5-90/007)
- Technology Demo. Summary (EPA/540/S5-90/007)
- Demonstration Bulletin (EPA/540/M5-90/007)

Dynaphore, Inc.- Forager Sponge Technology
- Demonstration Bulletin (EPA/540/MR-94/522)
- Capsule (EPA/540/R-94/522a)
- Innovative Tech. Eval. Rept. (EPA/540/R-94/522)

ECOVA Corporation - Bioslurry Reactor [Pilot-Scale Demonstration of Slurry-Phase Biological Reactor for Creosote-Contaminated Wastewater]
- Technology Evaluation Vol. 1 (EPA/540/5-91/009)[3] PB93-205532
- Applications Analysis (EPA/540/A5-91/009)
- Technology Demo. Summary (EPA/540/S5-91/009)
- Demonstration Bulletin (EPA/540/M5-91/009)

---

[1] Order documents free of charge by calling EPA's Center for Environmental Research Information (CERI) at 513-569-7562 or Fax 513-569-8695.

[2] Documents with a PB number are out of stock and must be ordered by that number at cost from:

National Technical Information Service
5285 Port Royal Road
Springfield VA 22161
Telephone 703-487-4650

[3] Out of stock

Demonstration Project Results (Continued)

ELI Eco Logic International, Inc.
- GasPhase Chemical Reduction

- Demonstration Bulletin (EPA/540/MR-93/522)
- Technology Evaluation Vol. 1 (EPA/540/R-93/522a) PB95-100251
- Technology Evaluation Appendices (EPA/540/R-93/522b)[3] PB95-100251
- Applications Analysis (EPA/540/AR-93/522)
- Technology Demo. Summary (EPA/540/SR-93/522)

- Thermal Desorption Unit

- Demonstration Bulletin (EPA/540/MR94/504)
- Applications Analysis (EPA/540/AR-94/504

EnviroMetal Technologies, Inc.-Metal-Enhanced Abiotic Degradation Technology

- Demonstration Bulletin (EPA/540/MR95/510)

EPOC Water, Inc. - Microfiltration Technology

- Demonstration Bulletin (EPA/540/MR93/513)
- Applications Analysis (EPA/540/AR-93/513)

Filter Flow Technology, Inc. - Colloid Polishing Filter Method

- Demonstration Bulletin (EPA/540/MR95/501)
- Capsule (EPA/540/R-94/501a) PB95-122792
- Innovative Tech. Eval. Rept. (EPA/540/R-94/501) B95-122792

Geo-Con, Inc.-In-Situ Solidification and Stabilization Process

- Technology Evaluation Vol. 1 (EPA/540/5-89/004a)
- Technology Evaluation Appendices (EPA/540/R-93/522b)[3] PB95-100251
- Technology Evaluation Vol. 11 (EPA/540/5-89)004b)[3] PB89-194179
- Technology Evaluation Vol. 111 (EPA/540/5-89/004c)[3] PB90-269069
- Technology Evaluation Vol. 1V (EPA/540/5-89/004d)[3] PB90-269077
- Applications Analysis (EPA/540/A5-89/004)
- Technology Demo. Summary (EPA/540/S5-89/004)
- Technology Demo. Summary, Update Report (EPA/540/S5-89/004a)
- Demonstration Bulletin (EPA/540/M5-89/004)[3]

Geosafe Corporation - In-Situ Vitrification

- Demonstration Bulletin (EPA/540/MR94/520)
- Capsule (EPA/540/R-94/520a)[3] PB95-177101
- Innovative Tech. Eval. Rept. (EPA/540/R-94/520)

GeoTech Development Corporation - Cold Top Vitrification

- Demonstration Bulletin (EPA/540/MR-97/506)

GIS/Solutions, Inc. - GIS/KEY Environmental Data Management System

- Demonstration Bulletin (EPA/540/MR94/505)
- Capsule (EPA/540/SR-94/505)
- Innovative Tech. Eval. Rept. (EPA/540/R-94/505) PB95-138319

Grace Dearborn Bioremediation Technology

- Demonstration Bulletin (EPA/540/MR-95/536)
- Capsule (EPA/540/R-95/536a)
- Innovative Tech. Eval. Rept. (EPA/540/R-95/536)

Gruppa Italimpresse (developed by Shirco Infrared Systems, Inc.) - Infrared Incineration

- Technology Evaluation -Peake Oil (EPA/540/5-88/002a)
- Technology Evaluation Report - Peake Oil Vol. 11 (EPA/540/5-88/002b) PB89-116024
- Technology Evaluation - Rose Township (EPA/540/5-89/007a) PB89-125991
- Technology Evaluation- Rose Township Vol. 11 (EPA/540/5-89)007b) PB89-167910
- Applications Analysis (EPA/540/A5-89/010) PB89-233423
- Technology Demo Summary (EPA/540/S5-89/007)[3]
- Demonstration Bulletin (EPA/540/M5-88/002)[3]

Hazcon, Inc. (now Funderburk and Assoc.) - Solidification Process

- Technology Evaluation Vol. 1 (EPA/540/5-89/001a) PB89-158810[3]
- Technology Evaluation Vol. 11 (EPA/540/5-89)001b) PB89-158828[3]
- Applications Analysis (EPA/540/A5-89/001)
- Technology Demo Summary (EPA/540/S5-89/001)[3]
- Demonstration Bulletin (EPA/540/M5-89/001)[3]

High Voltage Environmental Applications, Inc.

- Demonstration Bulletin (EPA/540/MR-96/504)
- Innovative Tech. Eval. Rept. (EPA/540/R-96/504)

Horsehead Resource Development Co., Inc. - Flame Reactor

- Technology Evaluation Vol. 1 (EPA/540/5-91/005) PB92-205855
- Applications Analysis (EPA/540/A5-91/005)
- Technology Demo Summary (EPA/540/S5-91/005)
- Demonstration Bulletin (EPA/540/M5-91/005)

---

[1] Order documents free of charge by calling EPA's Center for Environmental Research Information (CERI) at 513-569-7562 or Fax 513-569-8695.

[2] Documents with a PB number are out of stock and must be ordered by that number at cost from:

National Technical Information Service
5285 Port Royal Road
Springfield VA 22161
Telephone 703-487-4650

[3] Out of stock

Demonstration Project Results (Continued)

Hrubetz Environmental Services, Inc. - HRUBOUT Process
- Demonstration Bulletin (EPA/540/MR-93/524)

Huges Environmental Systems, Inc. - Steam Enhanced Recovery Process
- Demonstration Bulletin (EPA/540/MR94/510)
- Capsule (EPA/540R-94/510a)
- Innovative Tech. Eval. Rept. (EPA/540/R-94/510)

IT Research Institute (Brown and Root Environmental, Inc.) - Radio Frequency Heating
- Demonstration Bulletin (EPA/540/MR94/527)
- Capsule (EPA/540/R-94/527a)
- Innovative Tech. Eval. Rept. (EPA/540/R-94/527)

International Waste Technologies/Geo-Con, Inc . - In-Situ Solidification and Stabilization Process
- Technology Evaluation Vol. 1 (EPA/540/5-89/004a) PB90-194161[2]
- Technology Evaluation Appendices (EPA/540/R-93/522b) PB95-100251[2]
- Technology Evaluation Vol. 11 (EPA/540/5-89/004b) PB89-194179[2]
- Technology Evaluation Vol. 111 (EPA/540/5-89/004c) PB90-269069[2]
- Technology Evaluation Vol. 1V (EPA/540/5-89/004d) PB90-269077[2]
- Applications Analysis (EPA/540/A5-89/004) PB90-269085[2]
- Technology Demo. Summary (EPA/540/S5-89/004)[3]
- Technology Demo. Summary, Update Report (EPA/540/S5-89/004a)[3]
- Demonstration Bulletin (EPA/540/M5-89/004)[3]

KAI Technologies Inc./Brown and Root Environmental Radio Frequency Heating
- Demonstration Bulletin (EPA/540/MR-94/528)
- Capsule (EPA/540/R-94/528a)
- Innovative Tech. Eval. Report (EPA/540/R-94/528)1

Magnum Water Technology - CAV-OX Ultraviolet Oxidation Process
- Demonstration Bulletin (EPA/540/MR-93/520)
- Applications Analysis (EPA/540/AR-93/520) PB94-189438
- Technology Evaluation Rep. (EPA/540/R-93/520)[3] PB95-166161
- Technology Demo Summary (EPA/540/SR-93/520)

Matrix Photocatalytic Ltd. - Photocatalytic Aqueous Phase Organics Destruction Process
- Innovative Tech. Eval. Report (EPA/540/R-97/503)

Maxymillian Technologies (formerly Clean Berkshires, Inc.) - Thermal Desorption System
- Demonstration Bulletin (EPA/540/MR-94/507)
- Capsule (EPA/540/R-94/507a) PB95-122800[2]

New Jersey Institute of Technology - Cold Top Vitrification Process
- Demonstration Bulletin (EPA/540/MR-97/506)

New York State Multi-Vendor Bioremediation:
- ENSR Consulting & Engineering/Larson Engineers - Ex-Situ Biovault
- Demonstration Bulletin (EPA/540/MR-95/524)

- R.E. Wright Environmental Inc. - In-Situ Bioremediation System
- Demonstration Bulletin (EPA/540/MR-95/525)

-SBP Technologies, Inc. And Env. Laboratories, Inc. - Vacuum-Vaporized Well (UVB) System
- Demonstration Bulletin (EPA/540/MR-96/506)

North American Technologies Group, Inc. - SFC Oleofiltration System
- Demonstration Bulletin (EPA/540/MR-94/525)
- Capsule (EPA/540/R-94/525a)[3] PB95-167227
- Innovative Tech. Eval. Rept. (EPA/540/R-94/525)

Ogden Environmental Services, Inc. (now General Atomics) - Ogden Circulating Bed Combustor
- Demonstration Bulletin (EPA/540/MR-92/001)
- Technology Evaluation Rep. (EPA/540/MR-92/001)

---

[1] Order documents free of charge by calling EPA's Center for Environmental Research Information (CERI) at 513-569-7562 or Fax 513-569-8695.

[2] Documents with a PB number are out of stock and must be ordered by that number at cost from:

National Technical Information Service
5285 Port Royal Road
Springfield VA 22161
Telephone 703-487-4650

[3] Out of stock

Demonstration Project Results (Continued)

Peroxidation Systems, Inc. (now Vulcan) - Perox-Pure™ Chemical Oxidation
- Demonstration Bulletin (EPA/540/MR-93/501)
- Applications Analysis (EPA/540/AR-93/501)
- Technology Evaluation Rep. (EPA/540/R-93/501)[3] PB93-213528
- Technology Demo Summary (EPA/540/SR-93/501)

Resources Conservation Company - The Basic Extractive Sludge Treatment (B.E.S.T.) - Solvent Extraction
- Demonstration Bulletin (EPA/540/MR-92/079)
- Applications Analysis (EPA/540/AR-92/079)
- Technology Evaluation -Vol. 1 (EPA/540/R-92/079a) PB93-227122
- Technology Evaluation Vol. 11, Part 1 (EPA/540/R-92/079b)[3] PB93-227130
- Technology Evaluation Vol. 11, Part 2 (EPA/540/R-92/079c)[3] PB93-227148
- Technology Evaluation Vol. 11, Part 3 (EPA/540/R-92)079d)[3] PB93-227155
- Technology Demo Summary (EPA/540/SR-92/079)

Retech, Inc. - Plasma Centrifugal Furnace (Plasma Arc Vitrification)
- Demonstration Bulletin (EPA/540/M5-91/007)
- Technology Evaluation -Vol. 1 (EPA/540/5-91/007a)[3] PB92-216035
- Technology Evaluation Vol. 11 (EPA/540/5-91/007b)[3] PB92-216043
- Applications Analysis (EPA/540/A5-91/007) PB92-218791
- Technology Demo Summary (EPA/540/S5-91/007)

Risk Reduction Engineering Laboratory - and IT Corporation - Debris Washing System
- Technology Evaluation -Vol. 1 (EPA/540/5-91/006a)
- Technology Evaluation Vol. 11 (EPA/540/5-91/006b)[3] PB91-231464
- Technology Demo Summary(EPA/540/S5-91/006)

- and University of Cincinnati-Hydraulic Fracturing of Contaminated Soil
- Demonstration Bulletin (EPA/540/MR-93/505)
- Technology Evaluation and Applications Analysis Combined (EPA/540/R-93/505)
- Technology Demo Summary (EPA/540/SR-93/505)

-and USDA-Forest Products Technology - Fungal Treatment Technology
- Demonstration Bulletin (EPA/540/MR-93/514)

-Mobile Volume Reduction Unit at the Sand Creek Superfund Site
- Treatability Study Bulletin (EPA/540/MR-93/512)

-Mobile Volume Reduction Unit at the Escambia Superfund Site
- Treatability Study Bulletin (EPA/540/MR-93/511)

-Volume Reduction Unit
- Demonstration Bulletin (EPA/540/MR-93/508)
- Applications Analysis (EPA/540/AR-93/508)
- Technology Evaluation (EPA/540/R-93/508)[3] PB94-136264
- Technology Demo Summary (EPA/540/SR-93/508)

Rochem Separations Systems, Inc. - Disc Tube Modle Technology
- Demonstration Bulletin (EPA/540/MR-96/507)
- Capsule (EPA/540/R-96/507a)
- Innovative Tech. Eval. Report (EPA/540/R-96/507)

Roy F. Weston, Inc.
-and IEG Technologies-Unterdruck-Verdampfer-Brunner Technology (UVB) Vacuum Vaporizing Well
- Demonstration Bulletin (EPA/540/MR-95/500)
- Capsule (EPA/540/R-95/500a)

-Low Temperature Thermal Treatment (LT3) System
- Demonstration Bulletin (EPA/540/MR-92/019)
- Applications Analysis (EPA/540/AR-92/019)

Sandia National Labs - In Situ Electrokinetic Extraction System
- Demonstration Bulletin (EPA/540/MR-97/509)

SBP Technologies, Inc.-Membrant Filtration and Bioremediation
- Demonstration Bulletin (EPA/540/MR-92/014)
- Applications Analysis (EPA/540/AR-92/014)

[1] Order documents free of charge by calling EPA's Center for Environmental Research Information (CERI) at 513-569-7562 or Fax 513-569-8695.
[2] Documents with a PB number are out of stock and must be ordered by that number at cost from:
National Technical Information Service
5285 Port Royal Road
Springfield VA 22161
Telephone 703-487-4650
[3] Out of stock

Demonstration Project Results (Continued)

SilicateTechnology Corporation-Solidification/Stabilization of Organic/Inorganic Contaminants
- Demonstration Bulletin (EPA/540/MR-92/010)
- Applications Analysis (EPA/540/AR-92/010)[3] PB93-172948
- Technology Evaluation (EPA/540/R-92/010)[3] PB95-255709
- Technology Demo Summary (EPA/540/SR-92/010)

Simplot, J.R. - Ex Situ Anaerobic Bioremediation Technology: TNT
- Demonstration Bulletin (EPA/540/MR-95/529)
- Capsule (EPA/540/MR-95/529a)
- Innovative Tech. Eval. Report (EPA/540/R-95/529)

Simplot, J.R. - Ex-Situ Anaerobic Bioremediation System (The SABRE Process)
- Demonstration Bulletin (EPA/540/MR-94/508)
- Capsule (EPA/540R-94/508a)
- Innovative Tech. Eval. Report (EPA/540/R-94/508)

Soiltech ATP Systems, Inc.
-Aostra-SoilTech Anaerobic Thermal Process
- Demonstration Bulletin (EPA/540/MR-92/008)

-SoilTech Anaerobic Thermal Processor
- Demonstration Bulletin (EPA/540/MR-92/078)

Soliditech, Inc. - Solidification and Stabilization
- Technology Evaluation -Vol. 1 (EPA/540/5-89/005a)[3] PB90-191750
- Technology Evaluation Vol. 11 EPA/540/5-89/005b)[3] PB90-191768
- Applications Analysis (EPA/540/A5-89/005)
- Technology Demo Summary (EPA/540/S5-89/005)[3]
- Demonstration Bulletin (EPA/540/M5-89/005)[3]

Solucorp - Molecular Bonding System
- Innovative Tech. Eval. Report (EPA/540/R-97/507)

Sonotech, Inc. - Cello Pulse Combustion Burner System
- Demonstration Bulletin (EPA/540/MR-95/502)
- Capsule (EPA/540/R-95/502a)

TerraKleen Response Group, Inc. - Solvent Extraction Treatment System
- Demonstration Bulletin (EPA/540/MR-94/521)[3]
- Capsule (EPA/540/R-94/521a)

Terra Vac, Inc. - In Situ Vacuum Extraction
- Demonstration Bulletin (EPA/540/M5-89/003)[3]
- Technology Evaluation -Vol. 1 (EPA/540/5-89/003a)[3] PB89-192025
- Technology Evaluation Vol. 11 (EPA/540/5-89/003b)[3] PB89-192033
- Applications Analysis (EPA/540/A5-89/003)
- Technology Demo Summary(EPA/540/S5-89/003)

Texaco, Inc. - Entrained-Bed Gasification Process
- Demonstration Bulletin (EPA/540/MR-94/514)
- Capsule (EPA/540/R-94/514a)
- Innovative Tech. Eval. Report (EPA/540/R-94/514)

Thorneco, Inc. - Enzyme - Activated Cellulose Technology
- Treataability Study Bulletin (EPA/540/MR-92/018)[3]

Toronto Harbour Commission - Soil Recycling Treatment Train
- Demonstration Bulletin (EPA/540/MR-92/015)
- Applications Analysis (EPA/540/AR-93/517)
- Technology Evaluation (EPA/540/R-93/517)[3] PB93-216067
- Technology Demo Summary (EPA/540/SR-93/517)

Toxic Treatments USA, Inc. (Now NOVATERRA, Inc.) - In-Situ Steam/Hot Air Stripping
- Demonstration Bulletin (EPA/540/M5-90/003)
- Applications Analysis (EPA/540/A5-90/008)

Ultrox, a Division of Zimpro Environmental, Inc. - UV Ozone Treatment for Liquids
- Demonstration Bulletin (EPA/540/M5-89/012)
- Applications Analysis (EPA/540/A5-89/012)
- Technology Evaluation (EPA/540/5-89/012)[3] PB90-198177
- Technology Demo Summary (EPA/540/S5-89/012)

U.S. EPA - McColl Superfund Site - Demonstration of a Trial Excavation
- Technology Evaluation (EPA/540/5-92/015)[3] PB92-226448
- Applications Analysis (EPA/540/AR-92/015)
- Technology Demo Summary (EPA/540/SR-92/015)

---

[1] Order documents free of charge by calling EPA's Center for Environmental Research Information (CERI) at 513-569-7562 or Fax 513-569-8695.
[2] Documents with a PB number are out of stock and must be ordered by that number at cost from:

National Technical Information Service
5285 Port Royal Road
Springfield VA 22161
Telephone 703-487-4650
[3] Out of stock

Demonstration Project Results (Continued)

Wheelabrator Clean Air Systems, Inc. (formerly Chemical Waste Management, Inc.) -PO*WW*ER™ Technology

- Demonstration Bulletin (EPA/540/MR-93/506)
- Applications Analysis (EPA/540/AR-93/506)
- Technology Evaluation -Vol. 1 (EPA/540/R-93/506a)[3] PB94-160637
- Technology Evaluation Vol. 11 (EPA/540/R-93506b)[3] PB94-160660
- Technology Demo Summary (EPA/540/SR-93/506)

Zenon Environmental, Inc. - Zenon Cross-Flow Pervaporation Technology

- Demonstration Bulletin (EPA/540/MR-95/511)
- Capsule (EPA/540/R-95/511a)

Zenon Environmental Systems - Zenogem Wastewater Treatment Process

- Demonstration Bulletin (EPA/540/MR-95/503)
- Capsule (EPA/540/R-95/503a)

[1] Order documents free of charge by calling EPA's Center for Environmental Research Information (CERI) at 513-569-7562 or Fax 513-569-8695.

[2] Documents with a PB number are out of stock and must be ordered by that number at cost from:

National Technical Information Service
5285 Port Royal Road
Springfield VA 22161
Telephone 703-487-4650

[3] Out of stock

Emerging Technologies Program Reports

General Publications

- Superfund Innovative Technology Evaluation Program: - Innovation Making a Difference Emerging Tech. Brochure (EPA/540/F-94/505)
- Superfund Innovative Technology Evaluation Program: - Technology with an Impact Emerging Tech. Brochure (EPA/540/F-93/500)
- SITE Emerging Technology Program (Brochure) (EPA/540/F-95/502)

ABB Environmental Services, Inc. - Two Zone PCE Bioremediation System

- Emerging Tech. Bulletin (EPA/540/F-95/510)

Aluminum Company of America (Now Media & Process Technology) - Bioscrubber for Removing Hazardous Organic Emission from Soil, Water, and Air Decontamination Process

- EmergingTech. Report (EPA/540/R- 93/521)[3] PB93-227025
- Emerging Tech. Bulletin (EPA/540/F-93/507)
- Emerging Tech. Summary (EPA/540/SR-93/521)
- Journal Article AWMA Vol. 44, No. 3, March 1994

Atomic Energy of Canada, Limited - Chemical Treatment and Ultrafiltration

- Emerging Tech. Bulletin (EPA/540/F-92/002)

Babcock & Wilcox Co. - Cyclone Furnace (Soil Vitrification)

- EmergingTech. Report (EPA/540/R- 93/507) PB93-163038
- Emerging Tech. Bulletin (EPA/540/F-92/010)
- Emerging Tech. Summary (EPA/540/SR-93/507)

Batelle Memorial Institute - In Situ Elecroacoustic Soil Decontamination

- Emerging Technology (EPA/540/5-90/004)[3] PB90-204728
- Emerging Tech. Summary (EPA/540/S5-90/004)[3]

Bio-Recovery Systems, Inc. - Removal and Recovery of Metal Ions from Groundwater (AlgaSORB)

- Emerging Technology (EPA/540/5-90/005a)
- Emerging Tech. - Appendices (EPA/540/5-90/005b)[3] PB90-252602
- Emerging Tech. Summary (EPA/540/S5-90/005)
- Emerging Tech. Bulletin (EPA/540/F-92/003)

Biotrol, Inc. - Mehanotrophic Bioreactor System

- Emerging Tech. Bulletin (EPA/540/F-93/506)
- Emerging Tech. Summary (EPA/540/SR-93/505)
- Journal Article AWMA Vol. 45, No.1, Jan. 1995

Center for Hazardous Materials Research - Acid Extraction Treatment System for Treatment of Metal Contaminated Soils

- Emerging Tech. Report (EPA/540/R-94/513)[3] PB94-188109
- Emerging Tech. Summary (EPA/540/SR-94/513)

- Reclamation of Lead from Superfund Waste Material Using Secondary Lead Smelters

- Emerging Tech. Bulletin (EPA/540/F-94/510)
- Emerging Tech. Summary (EPA/540/SR-95/504)
- Emerging Tech. Report (EPA/540/R-95/504)[3] PB9-199022

-Simulatanious Destruction of Organics and Stabilization of Metals in Soils

- Emerging Tech. Summary (EPA/540/SR-98/500)
- Emerging Tech. Report (EPA/540/R-98/500) PB98-133150

Colorado School of Mines - Constructed Wetlands-Based Treatment

- Emerging Tech. Bulletin (EPA/540/F-92/001)
- Emerging Tech. Summary (EPA/540/SR-93/523)
- Emerging Tech. Report (EPA/540/R-93/523)[3] PB93-233914

University of Dayton Research Institute - Development of a Photothermal Detoxification Unit

- Emerging Tech. Bulletin (EPA/540/F-95/505)
- Emerging Tech. Summary (EPA/540/SR-95/526)
- Emerging Tech. Report (EPA/540/R-95/526)[3] PB95-255733

Electro-Pure Systems, Inc. - Alternating Current Electrocoagulation Technology

- Emerging Tech. Bulletin (EPA/540/F-92/011)
- Emerging Tech. Summary (EPA/540/S-93/504)
- Journal Article AWMA V43, No. 43, May 1993

---

[1] Order documents free of charge by calling EPA's Center for Environmental Research Information (CERI) at 513-569-7562 or Fax 513-569-8695.

[2] Documents with a PB number are out of stock and must be ordered by that number at cost from:

National Technical Information Service
5285 Port Royal Road
Springfield VA 22161
Telephone 703-487-4650

[3] Out of stock

Emerging Technologies Program Reports

Electokinetics Inc. -Theoretical and Experimental Modeling of Multispecies...Electrokinetic Soil Processing
- Emerging Tech. Bulletin (EPA/540/F-95/504)
- Emerging Tech. Summary (EPA/600/SR-97/054)
- Emerging Tech. Report (EPA/600/R-97/054) PB97-193056[2]

Energy and Environmental Engineering - Laser-Induced Photochemical Oxidative Destruction
- Emerging Tech. Bulletin (EPA/540/F-92/004)
- Emerging Tech. Summary (EPA/540/SR-92/080)
- Emerging Tech. Report (EPA/540/R-92/080)[3] PB93-131431

Energy and Environmental Research Corporation - Hybrid Fluidized Bed System
- Emerging Tech. Bulletin (EPA/540/F-93/508)

FERRO Corporation - Waste Vitrification Through Electric Melting
- Emerging Tech. Bulletin (EPA/540/F-95/503)

Florida International University (or Electron Beam Research Facility)
- Electron Beam Treatment for Removal of Benzene and Toluene from Aqueous Streams and Sludge
- Emerging Tech. Bulletin (EPA/540/F-93/502)

- Electron Beam Treatment for the Trichloroethylene and Tetrachloroethylene from Aqueous Stream
- Emerging Tech. Bulletin (EPA/540/F-92/009)

-Removal of Phenol from Aqueous Solutions Using High Energy Electron Beam Irradiation
- Emerging Tech. Bulletin (EPA/540/F-93/509)

Institute of Gas technology
-Chemical and Biological Treatment (CBT)
- Emerging Tech. Bulletin (EPA/540/F-94/504)

-Fluid Extraction-Biological Degradation Process
- Emerging Tech. Bulletin (EPA/540/F-94/501)

IT Corporation - Innovative Methods for Bioslurry Treatment
- Emerging Tech. Bulletin (EPA/540/F-96/505)
- Emerging Tech. Summary (EPA/540/SR-96/505)
- Emerging Tech. Report (EPA/540/ R-96/505) PB97-176820[2]

IT Corporation - Photolysis/Biodegradation of PCB and PCDD/PCDF Contaminated Soils
- Emerging Tech. Bulletin (EPA/540/F-94/502)
- Emerging Tech. Summary (EPA/540/SR-94/531)
- Emerging Tech. Report (EPA/540/R-94/531)[3] PB95-159992

IT Corporation - Process for the Treatment of Volatile Organic Carbon & Heavy-Metal Contaminated Soil
- Emerging Tech. Bulletin (EPA/540/F-95/509)

J.R. Simplot - Anaerobic Destruction of Nitroaromatics (the SABRE Process)
- Journal Article App.Env.Micro, Vol. 58, pp. 1683-89

Matrix Photocatalytic, Inc. - Photocatalytic Water Treatment
- Journal Article (EPA/600/A-93/282)[3] PB94-130184

Membrane Technology and Research, Inc. - Volatile Organic Compound Removal from Air Streams by Membrane Separation
- Emerging Tech. Bulletin (EPA/540/F-94/503)

M.L. Energia- Reductive Photo-Dechlorination Process for Safe Conversion of Hazardous Chlorocarbon Waste Streams
- Emerging Tech. Bulletin (EPA/540/F-94/508)

New Jersey Institute of Technology - GHEA Associates Process for Soil Washing and Wastewater Treatment
- Emerging Tech. Bulletin (EPA/540/F-94/509)

PURUS, Inc. - Photolytic Oxidation Process [Destruction of Organic Contaminants in Air Using Advanced Ultraviolet Flashlamps]
- Emerging Tech. Bulletin (EPA/540/F-93/501)
- Emerging Tech. Summary (EPA/540/SR-93/516)
- Emerging Tech. Report (EPA/540/R-93/516) PB93-205383

Roy F. Weston, Inc. - Ambersorb 563 Adsorbent
- Emerging Tech. Bulletin (EPA/540/F-95/500)
- Emerging Tech. Summary (EPA/540/SR-95/516)
- Emerging Tech. Report (EPA/540/R-95/516)[3] PB95-264164

---

[1] Order documents free of charge by calling EPA's Center for Environmental Research Information (CERI) at 513-569-7562 or Fax 513-569-8695.

[2] Documents with a PB number are out of stock and must be ordered by that number at cost from:

National Technical Information Service
5285 Port Royal Road
Springfield VA 22161
Telephone 703-487-4650

[3] Out of stock

Emerging Technologies Program Reports

University of Washington - Metals Treatment at Superfund Sites by Adsorptive Filtration

- Emerging Tech. Bulletin (EPA/540/F-92/008)
- Emerging Tech. Summary (EPA/540/SR-93/515)
- Emerging Tech. Report (EPA/540/R-93/515) [3]
  PB94-170230

Vortec Corporation - Vitrification

- Published Paper, Glass Production Technol International, 1994, p. 103 - 106
- Emerging Tech. Summary (EPA/540/S-97/501)[4]

Wastewater Technology Centre - [A] Cross-Flow Pervaporation System [for Removal of VOC's from Contaminated Water]

- Emerging Tech. Bulletin (EPA/540/F-93/503)
- Emerging Tech. Summary (EPA/540/SR-94/512)
- Emerging Tech. Report (EPA/540/R-94/512) [3]
  PB95-170230

[1] Order documents free of charge by calling EPA's Center for Environmental Research Information (CERI) at 513-569-7562 or Fax 513-569-8695.

[2] Documents with a PB number are out of stock and must be ordered by that number at cost from:

National Technical Information Service
5285 Port Royal Road
Springfield VA 22161
Telephone 703-487-4650

[3] Out of stock

Measuring and Monitoring Program Reports

Cone Penetrometers

Loral Rapid Optical Screening Tool (ROST)
- Demonstration Bulletin (EPA/540/MR-95/519)
- Innovative Tech. Eval. Report (EPA/540/R-95/519)

Site Characterization Analysis Penetrometer System (SCAPS)
- Demonstration Bulletin (EPA/540/MR-95/520)
- Innovative Tech. Eval. Report (EPA/540/R-95/520)

Field Portable X-Ray Fluorescence

HNU Systems SEFA-P Field Portable X-ray Fluorescence
- Innovative Tech. Eval. Report (EPA/600/R-97/144)

Metorex X-Met 920P and 940 Field Portable X-ray Fluorescence
- Innovative Tech. Eval. Report (EPA/600/R-97/146)

Metorex X-Met 920MP Field Portable X-ray Fluorescence
- Innovative Tech. Eval. Report (EPA/600/R-97/151)

Niton XL Spectrum Field Portable X-ray Fluorescence
- Innovative Tech. Eval. Report (EPA/600/R-97/150)

SciTec MAP Spectrum Field Portable X-ray Fluorescence
- Innovative Tech. Eval. Report (EPA/600/R-97/147)

TN Spectrace TN9000 and TN Pb Field Portable X-ray Fluorescence Analyzers
- Innovative Tech. Eval. Report (EPA/600/R-97/145)

Portable Gas Chromatographs

Analytical & Remedial Technology Purge and Trap Gas Chromatographic Manifod System (AVOS)
- Technology Evaluation Report (EPA/600/R-93/109)

Bruker Mobiel Environmental Monitor
- Technology Evaluation Report (EPA/600/X-91/079)

Field Analytical Screening Program (FASP) Method for PCP
- Demonstration Bulletin (EPA/540/R-95/528)
- Innovative Tech. Eval. Report (EPA/540/MR-95/528)

Field Analytical Screening Program (FASP) Method for PCB
- Demonstration Bulletin (EPA/540/R-95/521)
- Innovative Tech. Eval. Report (EPA/540/MR-95/521)

HNU Portable Gas Chromatograph
- Results reported in the Proceedings of the U.S. EPA Third International Field Screening Symposium Volume 2, Pages 682-693 (1993)

Photovac Portable Gas Chromatograph
- Results reported in the Proceedings of the U.S. EPA Third International Field Screening Symposium Volume 2, Pages 682-693 (1993)

Sentex Portable Gas Chromatograph
- Results reported in the Proceedings of the U.S. EPA Third International Field Screening Symposium Volume 2, Pages 682-693 (1993)

SRI Instruments Low Temperature Thermal Desorption System
- Results reported in the Proceedings of the U.S. EPA Third International Field Screening Symposium Volume 2, Pages 682-693 (1993)

[1] Order documents free of charge by calling EPA's Center for Environmental Research Information (CERI) at 513-569-7562 or Fax 513-569-8695.
[2] Documents with a PB number are out of stock and must be ordered by that number at cost from:

National Technical Information Service
5285 Port Royal Road
Springfield VA 22161
Telephone 703-487-4650
[3] Out of stock

Measuring and Monitoring Program Reports

Spectrometers

MDA Scientific Long-Path Fourier Transform Infrared Spectrometer
- Technology Evaluation Report (EPA/600/S3-91/071)

Xontech, Inc. Canister-based Sector Sample
- Report (EPA/600/S3-91/071)

PCP/PCB Immunoassay Test Kits

Char-N-Soil PCB Test Kit - Dexel
- Demonstration Bulletin (EPA/540/MR-95/518)
- Innovative Tech. Eval. Report (EPA/540/ R-95/518)

EnviroGard PCB Test Kit - Millipore Inc.
- Demonstration Bulletin (EPA/540/MR-95/517)
- Innovative Tech. Eval. Report (EPA/540/ R-95/517)

Millipore Immunoasay Test Kit for PCB
- Demonstration Bulletin (EPA/540/MR-95/517)
- Innovative Tech. Eval. Report (EPA/540/ R-95/517)

PCP Immunoassay Technologies: Ensys Inc. - PENTA Risc: Ohmicron Corp., - Penta RaPid; Millipore Inc. -
- Demonstration Bulletin (EPA/540/MR-95/514)
- Innovative Tech. Eval. Report (EPA/540/R-95/514)

Envirogard
- Demonstration Bulletin (EPA/540/MR-95/515)
- Innovative Tech. Eval. Report (EPA/540/ R-95/514)

U-Hanby PCP Test Kit
- Demonstration Bulletin (EPA/540/MR-95/515)
- Innovative Tech. Eval. Report (EPA/540/ R-95/515)

Westinghouse PCP Test Kit
Technology Evaluation Report (EPA/600/X-90/146)

Soil & Soil Gas Samples

Art's Manufacturing Soil Sampler
- Innovative Tech. Eval. Report (EPA/600/R-98/093)

Clements & Associates Soil Sampler
- Innovative Tech. Eval. Report (EPA/600/R-98/097)

Geoprobe® Soil Sampler
- Innovative Tech. Eval. Report (EPA/600/R-98/092)

Simulprobe® Soil Sampler
- Innovative Tech. Eval. Report (EPA/600/R-98/094)

Quandrel Soil Gas Sampler
- Innovative Tech. Eval. Report (EPA/600/R-98/096)

W.L. Gore & Associates Soil Gas Sampler
- Innovative Tech. Eval. Report (EPA/600/R-98/095)

[1] Order documents free of charge by calling EPA's Center for Environmental Research Information (CERI) at 513-569-7562 or Fax 513-569-8695.
[2] Documents with a PB number are out of stock and must be ordered by that number at cost from:

National Technical Information Service
5285 Port Royal Road
Springfield VA 22161
Telephone 703-487-4650
[3] Out of stock

SITE/NRMRL
SUPERFUND VIDEOTAPE LIBRARY

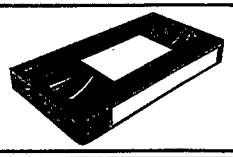

ORDERING INSTRUCTIONS

To obtain your choice of tapes, complete the order form on the opposite side of this page. Enclose the form with your check, made out to *Foster Wheeler Environmental Corporation* and mail to:

Foster Wheeler Environmental Corporation
Attn: Ms. Maria Witkowski
8 Peach Tree Hill Road
Livingston, New Jersey 07039

Only *PREPAID* Orders Can Be Accepted

For further information, contact
Ms. Witkowski at 1-800-580-3765

SITE VIDEOTAPES

These composite videotapes contain a number of EPA-produced documentaries on specific Superfund Innovative Technology Evaluation (SITE) Program demonstrations.

S1 Site Program
(6 Technology Demonstrations):

ECOVA (SHIRCO) Infrared Incineration System, Brandon, FL - 6/87

ECOVA (SHIRCO) Infrared Incineration System, Rose Twp., MI - 3/89

EMTECH (HAZCON) Solidification Process, Douglassville, PA - 10/87

IWT/GEO-CON In-Situ Stabilization and Solidification, Hialeah, FL - 4/88

TERRA VAC Vacuum Extraction System, Groveland, MA - 1/88

CF SYSTEMS Solvent Extraction Unit, New Bedford, MA - 3/89

S2 Site Program
(4 Technology Demonstrations):

ULTROX Ultraviolet Radiation and Oxidation, San Jose, CA - 3/89

BIOTROL Biological Aqueous Treatment, New Brighton, MN - 9/89

BIOTROL Soil Washing System, New Brighton, MN - 9/89

IT/RREL Debris Washing System, Hopkinsville, KY - 12/89

S3 Site Program
(4 Technology Demonstrations):

SOLIDTECH Solidification and Stabilization, Morganville, NJ - 12/88

CHEMFIX Solifidication and Stabilization, Clackamas, OR - 3/89

NOVATERRA (TTUSA) In Situ Steam and Air Stripping, San Pedro, CA - 9/89

AWD Integrated Vapor Extraction/ Steam Vacuum Stripping, Burbank, CA - 9/90

Ms. Maria Witkowski
Foster Wheeler Environmental Corporation
Superfund Videotape Library
8 Peach Tree Hill Road
Livingston, NJ 07039

First Class Mail

S4 Site Program
(4 Technology Demonstrations):

E.I. DUPONT/OBERLIN FILER Membrane Microfiltration, Palmerton, PA - 5/90

HORSEHEAD Flame Reactor, Atlanta, GA - 3/91

RETECH Plasma Centrifugal Furnace, Butte, MT - 7/91

BABCOCK & WILCOX Cyclone Furnace, Alliance, OH - 11/91

S5 Site Program
(4 Technology Demonstrations):

STC Immobilization of Organic/ Inorganic Contaminants in Soils, Selma, CA - 11/90

THC Soil Recycle Treatment Train at Toronto Harbor, Toronto, Ont., Canada - 5/92

R.C.C. Basic Extractive Sludge Treatment (B.E.S.T.), Grand Calumet River, Gary, IN - 7/92

PEROXIDATION SYSTEMS INC. Purox-Pure Chemical Oxidation Treatment, Altamont Hills, CA - 9/92

S6 Site Program
(4 Technology Demonstrations):

BERGMANN Soil/Sediment Washing Technology, Saginaw Bay, MI - 2/93

BESCORP Soil Washing System, Fairbanks, AK - 8/92

ELI Eco Logic International Inc., Hydrogen Reduction Gas-Phase Chemical Reduction Process, Bay City, MI - 11/93

MAGNUM Water Technology CAV-OX Ultraviolet Oxidation Process, Edwards AFB, CA - 1/94

S7 Site Program
(4 Technology Demonstrations):

TEXACO Gasification Process, South El Monte, CA - 6/95

SFC 0.5 Oleofiltration System, Pembroke, FL - 1/95

ITT Radio Frequency Heating Process, Kelly AFB, San Antonio, TX - 3/95

KAI Radio Frequency Heating Process, Kelly Air Force Base, San Antonio, TX - 4/95

R1 RREL/RCB Research Programs

This composite videotape contains five documentaries conducted under the auspices of the Risk Reduction Engineering Laboratory's Releases Control Branch:

- Synthetic Soils Matrix (SSM) Program
- Dioxin and the Mobile Incineration System
- Mobile Carbon Regeneration System
- Mobile Soils Washing System
- Mobile In Situ Containment/ Treatment Unit

Mail this form *(with check)* to:

Foster Wheeler Environmental Corporation
Attn: Ms. Maria Witkowski
8 Peach Tree Hill Road
Livingston, NJ 07039

Videotape Request Form

	S1 SITE Program Tape	$30.00	
	S2 SITE Program Tape	$30.00	
	S3 SITE Program Tape	$30.00	
	S4 SITE Program Tape	$30.00	
	S5 SITE Program Tape	$30.00	
	S6 SITE Program Tape	$30.00	
	S7 SITE Program Tape	$30.00	
	R1 RREL/ RCB Research Programs Tape	$30.00	

Shipping & Handling	$5.00 charge per tape	$5.00	
Int'l Orders	International surcharge per tape	$10.00	
	Total Cost		

Ship to:

Name

Company

Address

City/ State/ Zip

Telephone

Trade Name Index and Applicability Index

The following pages contain the Trade Name Index and the Applicability Index. The Trade Name Index cross-references all technologies that are registered or have a copyright, registered trademark, or service mark. Former company names and former technology names are also cross-referenced in the index. The volume number is given for each entry, followed by the page number. In addition, all former technology names are shown with their current names in parentheses.

The Applicability Index is organized by three different levels. The first level is media, the second is waste, and the third is technology type. The 12 media categories include the following: (1) air, (2) gas, (3) leachate, (4) liquid, (5) mine tailings, (6) other, (7) sediment, (8) sludge, (9) soil, (10) solids, (11) water, and (12) wastewater. The 19 contaminant categories include the following: (1) aromatic VOCs, (2) cyanide, (3) dioxins, (4) explosives, (5) furans, (6) halogenated VOCs, (7) heavy metals, (8) herbicides, (9) hydrocarbons, (10) metals, (11) other, (12) PAHs, (13) PCBs, (14) PCPs, (15) pesticides, (16) petroleum hydrocarbons, (17) radionuclides, (18) SVOCs, and (19) VOCs. The 14 technology type categories include the following: (1) biological degradation, (2) cone penetrometers, (3) field portable x-ray fluorescence, (4) materials handling, (5) other, (6) physical/chemical, (7) physical/chemical biological degradation, (8) physical/chemical radioactive waste treatment, (9) physical/chemical thermal desorption, (10) portable gas chromatographs, (11) solidification/stabilization, (12) spectrometers, (13) test kits, and (14) thermal destruction.

To use the Applicability Index, a three-step search must be completed. For example, to search for thermal desorption technologies that clean up soil contaminated with polychlorinated biphenyls (PCB), first look under soil, then PCBs, and finally physical/chemical thermal desorption.

TRADE NAME INDEX

Company/Technology Name	Volume, Page Number
2-PHASE™ EXTRACTION Process	V1, 180
ABB Environmental Services, Inc. (see Harding Lawson Associates)..	V2, 50
Accutech Remedial Systems, Inc. (see ARS Technologies).	V1, 24
Acid Extraction Treatment System.	V2, 30
Acoustic Barrier Particulate Separator.	V2, 48
Active Environmental, Inc..	V1, 20
Adsorption-Integrated-Reaction Process.	V2, 74
Adsorptive Filtration.	V2, 110
AEA Technology Environment..	V2, 16
AIR-II (Adsorption-Integrated-Reaction) Process	V1, 200
AIR-II (Adsorption-Integrated-Reaction) Process	V2, 74
Air-Sparged Hydrocyclone.	V2, 82
AirSentry Fourier Transform Infrared Spectrometer.	V3, 28
ALCOA Separation Technology, Inc. (see Media & Process Technology).	V2, 78
AlgaSORB© Biological Sorption.	V2, 96
Alternating Current Electrocoagulation Technology.	V2, 92
Aluminum Company of America (see Media & Process Technology)..	V2, 78
Ambersorb® 563 Adsorbent	V2, 116
American Combustion, Inc..	V1, 22
AMS™ Dual-Tube Liner Soil Sampler.	V3, 16
Anaerobic-Aerobic Sequential Bioremediation of PCE..	V2, 50
Anaerobic Thermal Processor..	V1, 150
Analytical and Remedial Technology, Inc..	V3, 14
Anodic Stripping Voltammetry for Mercury in Soil..	V3, 58
Arctic Foundations, Inc..	V1, 190
Arizona State University/Zentox Corporation..	V2, 18
ARS Technologies, Inc..	V1, 24
ART International, Inc..	V2, 20
Art's Manufacturing and Supply.	V3, 16
Atomic Energy of Canada, Limited (Chemical Treatment and Ultrafiltration).	V2, 22
Atomic Energy of Canada, Limited (Ultrasonic-Aided Leachate Treatment).	V2, 24
Augmented In Situ Subsurface Bioremediation Process.	V1, 34
Automated Sampling and Analytical Platform.	V3, 14
Base-Catalyzed Decomposition Process.	V1, 116
Batch Steam Distillation and Metal Extraction.	V2, 64
Battelle Memorial Institute.	V2, 26
Bergmann, A Division of Linatex, Inc..	V1, 26
Berkeley Environmental Restoration Center.	V1, 28
B.E.S.T. Solvent Extraction Technology.	V1, 104
Billings and Associates, Inc..	V1, 30
BiMelze® Mercury Immunoassay.	V3, 18
Binax Corporation, Antox Division (see Idetek, Inc.).	V3, 46
Bio-Recovery Systems, Inc..	V2, 96
Bio-Rem, Inc..	V1, 34
Biofilm Reactor for Chlorinated Gas Treatment.	V2, 94
BioGenesis Enterprises, Inc..	V1, 32
BioGenesis℠ Soil and Sediment Washing Process	V1, 32
Biological Aqueous Treatment System.	V1, 38
Biological/Chemical Treatment.	V2, 36

TRADE NAME INDEX (continued)

Biomineralization of Metals. V2, 130
Bionebraska, Inc.. . . . . V3, 18
Bioscrubber. V2, 78
Bioslurry Reactor. V1, 64
Biotherm Process™. V1, 36
Biotherm, LCC. V1, 36
Biotrol® (Biological Aqueous Treatment System). V1, 38
Biotrol® (Soil Washing System). V1, 40
Biotrol® (Methanotrophic Bioreactor System). V2, 28
Bioventing V1, 208
Brice Environmental Services Corporation. V1, 42
Bruker Analytical Systems, Inc.. . . . . V3, 20
BWX Technologies, Inc.. . . . . V1, 44
Calgon Carbon Advanced Oxidation Technologies. V1, 46
Cambell Centrifugal Jig (CCJ). V2, 84
Canonie Environmental Services Corporation (see Smith Environmental Technologies Corporation). V1, 148
Carver-Greenfield Process® for Solvent Extraction of Wet, Oily Wastes (see Biotherm Process™) V1, 36
CAV-OX® Process V1, 108
Center for Hazardous Materials Research (Acid Extraction Treatment System). V2, 30
Center for Hazardous Materials Research (Organics Destruction and Metals Stabilization). V2, 32
Center for Hazardous Materials Research (see Concurrent Technologies). V2, 34
Center Pivot Spray Irrigation System. V1, 170
CF Systems Corporation. V1, 48
Chelation/Electrodeposition of Toxic Metals from Soils. V2, 66
Chemfix Technologies, Inc.. . . . . V1, 50
Chemical and Biological Treatment. V2, 56
Chemical Treatment and Ultrafiltration. V2, 22
Chemical Waste Management, Inc. (see OHM Remediation Services Corp.). V1, 178
Chemical Waste Management, Inc. (see Wheelabrator Clean Air Systems, Inc.). V1, 136
Chromated Copper Arsenate Soil Leaching Process. V2, 76
Circulating Bed Combustor. V1, 80
Clay-Based Grouting Technology. V1, 114
Clean Berkshires, Inc. (see Maxymillian Technologies, Inc.). V1, 112
Clements, Inc.. . . . . V3, 24
Cognis, Inc. (TERRAMET® Soil Remediation System). V1, 52
Cognis, Inc. (Biological/Chemical Treatment). V2, 36
Cold-Top Ex Situ Vitrification of Chromium-Contaminated Soils V1, 86
Colloid Polishing Filter Method® (CPFM®). V1, 76
Colorado School of Mines V1, 54
Colorado Department of Public Health and Environment. V1, 54
Commodore Applied Technologies, Inc.. . . . . V1, 56
Compact Gas Chromatograph.. . . . . V3, 66
Concentrated Chloride Extraction and Recovery of Lead. V2, 136
Concurrent Technologies. V2, 34
Constructed Wetlands-Based Treatment. V1, 54
Coordinate, Chemical Bonding, and Adsorption Process. V2, 114
Core Barrel Soil Sampler.. . . . . V3, 62
Cross-flow Pervaporation System. V1, 182
Cryogenic Barrier. V1, 190
C-THRU Technologies Corporation. V3, 22
CURE International, Inc.. . . . . V1, 58

TRADE NAME INDEX (Continued)

CURE® - Electrocoagulation Wastewater Treatment System V1, 58
Cyclone Furnace. V1, 44
DARAMEND™ Bioremediation Technology V1, 90
Debris Washing System. V1, 122
Dechlorination and Immobilization. V1, 78
Dehydro-Tech Corporation (see Biotherm, LCC). V1, 36
Desorption and Vapor Extraction System (DAVES). V1, 220
Dexsil Corporation. V3, 26
DOW Environmental, Inc. (See Radian International LLC) V1, 138
Duke Engineering and Services, Inc.. ..... V1, 192
E.I. Dupont de Nemours and Company, and Oberlin Filter Company. V1, 60
Dynaphore, Inc.. ..... V1, 62
Ecova Corporation. V1, 64
EET, Inc. (see Active Environmental, Inc.). V1, 20
EG&G Environmental, Inc. (See Mactec-SBP Technologies Company, L.L.C.). V1, 204
Electro-Pure Systems, Inc.. ..... V2, 92
Electrochemical Peroxidation of PCB-Contaminated Sediments and Waters. V2, 98
Electroheat-Enhanced Nonaqueous-Phase Liquids Removal. V1, 196
Electrokinetic Soil Processing. V1, 66
Electrokinetics, Inc. (Electrokinetic Soil Processing). V1, 66
Electrokinetics, Inc. (In Situ Bioremediation by Electrokinetic Injection). V2, 120
Electron Beam Research Facility, Florida International University and University of Miami
(see High Voltage Environmental Applications, Inc.). V1, 94
Eli Eco Logic Inc.. ..... V1, 68
Eli Eco Logic International Inc.. ..... V1, 70
Emflux® Soil-Gas Survey System. V3, 54
Energia, Inc. (Reductive Photo-Dechlorination Treatment). V2, 38
Energia, Inc. (Reductive Thermal and Photo-Thermal Oxidation Processes for Enhanced
Conversion of Chlorocarbons). V2, 122
Energy and Environmental Engineering, Inc.. ..... V2, 112
Energy and Environmental Research Corporation (Hybrid Fluidized Bed System). V2, 40
Energy and Environmental Research Corporation (Reactor Filter System). V2, 42
Ensys Penta Test System. V3, 68
Ensys Environmental Products, Inc. (see Strategic Diagnostic). V3, 68
Enviro-Sciences Systems, Inc.. ..... V2, 20
Envirobond™ Solution. V1, 222
EnviroGard Corporation (see Strategic Diagnostic). V3, 70
EnviroGard™ PCB Immunoassay Test Kit. V3, 70
EnviroMetal Technologies, Inc. (In Situ and Ex Situ Metal-Enhanced Abiotic Degradation of
Dissolved Halogenated Organic Compounds in Groundwater). V1, 72
EnviroMetal Technologies, Inc. (Reactive Barrier). V1, 194
Environmental Technologies Group, Inc.. ..... V3, 28
Environmental BioTechnologies, Inc.. ..... V2, 44
Environmental Test Kits. V3, 26
EPOC Water, Inc.. ..... V1, 74
Equate® Immunoassay. V3, 46
Excavation Techniques and Foam Suppression Methods.. ..... V1, 166
Ex Situ Biovault. V1, 126
EXXFLOW V1, 74

TRADE NAME INDEX (Continued)

Ferro Corporation. V2, 46
Field Analytical Screening Program- PCB method.. . . . . V3, 78
Field Analytical Screening Program- PCP method.. . . . . V3, 80
Field Portable X-Ray Fluorescence Analyzers. V3, 48
Filter Flow Technology, Inc.. . . . . V1, 76
Flame Reactor. V1, 96
Fluid Extraction-Biological Degradation Process. V2, 58
Fluidized-Bed/Cyclonic Agglomerating Combustor. V2, 60
FORAGER® Sponge V1, 62
Frequency-Tunable Pulse Combustion System.. . . . . V1, 154
Fugro Geosciences, Inc.. . . . . V3, 30
Funderburk & Associates. V1, 78
Fungal Degradation Process. V2, 44
Fungal Treatment Technology. V1, 120
Gas-Phase Chemical Reduction Process. V1, 68
General Atomics, Nuclear Remediation Technologies Division. V2, 48
General Atomics. V1, 80
Geo-Con, Inc.. . . . . V1, 82
Geo-Microbial Technologies, Inc.. . . . . V2, 124
Geokinetics International, Inc.. . . . . V1, 196
GeoMelt Vitrification. V1, 84
Geoprobe Systems (Large Bore Soil Sampler). V3, 32
Geoprobe Systems (Geoprobe Soil Conductivity Sensor). V3, 34
Geoprobe Soil Conductivity Sensor. V3, 34
Geosafe Corporation. V1, 84
GeoTech Development Corporation. V1, 86
GHEA Associates Process V2, 86
GIS\KEY™ Environmental Data Management System V1, 88
GIS\Solutions, Inc.. . . . . V1, 88
GORE-SORBER® Screening Survey.. . . . . V3, 82
Grace Bioremediation Technologies. V1, 90
Graseby Ionics, Ltd., and PCP, Inc.. . . . . V3, 36
Gruppo Italimpresse. V1, 92
Hanby Environmental Laboratory Procedures, Inc.. . . . . V3, 38
Harding Lawson Associates. V2, 48
Hazardous Substance Management Research Center at New Jersey Institute of Technology
and Rutgers, The State University of New Jersey. V2, 52
Hazcon, Inc. (see Funderburk & Associates). V1, 78
Hewlitt-Packard Company. V3, 40
High Voltage Environmental Applications, Inc. (High-Energy Electron Irradiation). V1, 94
High Voltage Environmental Applications, Inc. (High-Energy Electron Beam Irradiation). V2, 54
High-Energy Electron Beam Irradiation. V2, 54
High Energy Electron Irradiation. V1, 94
HNU Systems Inc. (HNU Source Excited Flourescence Analyzer-Portable [SEFA-P] X-Ray
Fluorescence Analyzer). V3, 42
HNU Systems Inc. (HNU GC 311D Portable Gas Chromatograph). V3, 44
HNU Source Excited Fluorescence Analyser-Portable [SEFA-P] X-Ray Fluorescence Analyzer. V3, 42
HNU GC 311D Portable Gas Chromatograph. V3, 44
Horsehead Resource Development Co., Inc.. . . . . V1, 96

TRADE NAME INDEX (Continued)

HRUBETZ Environmental Services, Inc.. . . . . V1, 98
HRUBOUT® Process V1, 98
Hughes Environmental Systems, Inc.. . . . . V1, 100
Hybrid Fluidized Bed System. V2, 40
Hydraulic Fracturing. V1, 124
Idetek, Inc.. . . . . V3, 46
IIT Research Institute/Brown Root Environmental. V1, 102
In Situ and Ex Situ Metal-Enhanced Abiotic Degradation of Dissolved Halogenated Organic
Compounds in Groundwater. V1, 72
In Situ and Ex Situ Vacuum Extraction.. . . . . V1, 160
In Situ Bioremediation by Electrokinetic Injection. V2, 120
In Situ Bioventing Treatment System.. . . . . V1, 130
In Situ Electrokinetic Extraction System. V1, 224
In Situ Electroacoustic Soil Decontamination. V2, 26
In Situ Enhanced Bioremediation of Groundwater. V1, 198
In Situ Mitigation of Acid Water. V2, 108
In Situ Soil Treatment (Steam and Air Stripping).. . . . . V1, 134
In Situ Solidification and Stabilization Process. V1, 82
In Situ Steam Enhanced Extraction Process. V1, 28
In Situ Thermally Enhanced Extraction (TEE) Process. V1, 216
In Situ Vitrification V1, 84
Infrared Thermal Destruction. V1, 92
Institute of Gas Technology (Chemical and Biological Treatment). V2, 56
Institute of Gas Technology (Fluid Extraction-Biological Degradation Process). V2, 58
Institute of Gas Technology (Fluidized-Bed/Cyclonic Agglomerating Combustor). V2, 60
Institute of Gas Technology (Supercritical Extraction/Liquid Phase Oxidation). V2, 62
Integrated AquaDetox Steam Vacuum Stripping and Soil Vapor Extraction/Reinjection V1, 138
Ion Mobility Spectrometry. V3, 36
Ionics RCC. V1, 104
IT Corporation (Batch Steam Distillation and Metal Extraction). V2, 64
IT Corporation (Chelation/Electrodeposition of Toxic Metals from Soils). V2, 66
IT Corporation (Mixed Waste Treatment Process). V2, 68
IT Corporation (Photolytic and Biological Soil Detoxification). V2, 70
IT Corporation (Tekno Associates Bioslurry Reactor). V2, 72
IT Corporation (Oxygen Microbubble In Situ Bioremediation). V2, 126
ITT Night Vision. V1, 198
JMC Environmentalist's Subsoil Probe. V3, 24
KAI Technologies, Inc./Brown and Root Environmental. V1, 106
KSE, Inc.. . . . . V1, 200
KSE, Inc.. . . . . V2, 24
Large Bore Soil Sampler. V3, 32
Lasagna™ In Situ Soil Remediation V1, 202
Lasagna™ Public-Private Partnership. V1, 202
Lewis Environmental Services, Inc./Hickson Corporation. V2, 76
Liquid and Soils Biological Treatment.. . . . . V1, 140
Liquified Gas Solvent Extraction (LG-SX) Technology. V1, 48
Loral Corporation (see Fugro Geosciences, Inc.). V3, 30
Low Temperature Thermal Aeration (LTTA®). V1, 148

TRADE NAME INDEX (Continued)

Low Temperature Thermal Treatment System (LT³®). V1, 174
Low-Energy Extraction Process (LEEP®). V2, 20
MAECTITE® Chemical Treatment Process V1, 228
Mactec-SBP Technologies Company, L.L.C.. . . . . V1, 204
Magnum Water Technology. V1, 108
Matrix Photocatalytic Inc. (Photocatalytic Water Treatment). V1, 110
Matrix Photocatalytic Inc. (Photocatalytic Air Treatment). V1, 206
Maxymillian Technologies, Inc.. . . . . V1, 112
Media & Process Technology.. . . . . V2, 78
Membrane Filtration and Bioremediation.. . . . . V1, 144
Membrane Microfiltration. V1, 60
Membrane Technology and Research, Inc.. . . . . V2, 80
Metal Analysis Probe (MAP®) Portable Assayer. V3, 22
Metal Analysis Probe (MAP®) Spectrum Assayer. V3, 22
Metals Immobilization and Decontamination of Aggregate Solids (MeIDAS). V2, 88
Metals Release and Removal from Wastes. V2, 124
Methanotrophic Bioreactor System V2, 28
Metorex, Inc.. . . . . V3, 48
Microsensor Systems, Incorporated. V3, 50
Mixed Waste Treatment Process. V2, 68
Mobile Environmental Monitor. V3, 20
Montana College of Mineral Science and Technology (Air-Sparged Hydrocyclone). V2, 82
Montana College of Mineral Science and Technology (Cambell Centrifugal Jig). V2, 84
Morrison Knudsen Corporation/Spetstamponazhgeologia Enterprises. V1, 114
MSI-301A Vapor Monitor. V3, 50
MTI Analytical Instrument, Inc. (see Hewlitt-Packard Company). V3, 40
National Risk Management Research Laboratory (Base-Catalyzed Decomposition Process). V1, 116
National Risk Management Research Laboratory (Volume Reduction Unit). V1, 118
National Risk Management Research Laboratory (Bioventing). V1, 208
National Risk Management Research Laboratory and Intech 180 Corporation. V1, 120
National Risk Management Research Laboratory and IT Corporation. V1, 122
National Risk Management Research Laboratory, University of Cincinnati, and FRX, Inc.. . . . . V1, 124
New Jersey Institute of Technology. V2, 86
New York State Department of Environmental Conservation/ENSR Consulting and
Engineering and Larsen Engineers. V1, 126
New York State Department of Environmental Conservation/SBP Technologies, Inc.. . . . . V1, 128
New York State Department of Environmental Conservation/R.E. Wright Environmental, Inc.. . . . . V1, 130
Niton Corporation. V3, 52
North American Technologies Group, Inc... . . . . V1, 132
Novaterra Associates.. . . . . V1, 134
NoVOCs™ In-Well Stripping Technology V1, 204
OHM Remediation Services Corporation (X*TRAX™ Thermal Desorption). V1, 136
OHM Remediation Services Corporation (see IT Corporation). V2, 126
Ohmicron Corporation (see Strategic Diagnostic). V3, 72
Oleophilic Amine-Coated Ceramic Chip.. . . . . V1, 132
Organic Stabilization and Chemical Fixation/Solidification. V1, 156
Organics Destruction and Metals Stabilization. V2, 32
Oxygen Microbubble In Situ Bioremediation. V2, 126
PCB- and Organochlorine-Contaminated Soil Detoxification. V2, 104

TRADE NAME INDEX (Continued)

PE Photovac Voyager Portable Gas Chromatograph. V3, 56
PENTA RISc Test System (see Ensys Penta Test System) V3, 68
perox-pure™ Chemical Oxidation Technology. V1, 46
Photocatalytic Air Treatment. V1, 206
Photocatalytic Oxidation with Air Stripping. V2, 18
Photocatalytic Water Treatment. V1, 110
PhotoCAT™ Process. V2, 112
Photoelectrocatalytic Degradation and Removal. V2, 138
Photolytic and Biological Soil Detoxification. V2, 70
Photolytic Destruction of Vapor-Phase Halogens. V1, 218
Photolytic Oxidation Process. V2, 102
Photothermal Detoxification Unit. V2, 106
Photovac International, Inc (see Photovac Monitoring Instruments). V3, 56
Photovac Monitoring Instruments. V3, 56
Phytokinetics, Inc. (Phytoremediation Process). V1, 210
Phytokinetics, Inc. (Phytoremediation of Contaminated Soils). V2, 128
Phytoremediation of Contaminated Soils. V2, 128
Phytoremediation of TCE-Contaminated Shallow Groundwater. V1, 234
Phytoremediation Process. V1, 210
Phytoremediation Technology. V1, 212
Phytotech. V1, 212
Pintail Systems, Inc. (Spent Ore Bioremediation Process). V1, 214
Pintail Systems, Inc. (Biomineralization of Metals). V2, 130
Pneumatic Fracturing and Bioremediation Process. V2, 52
Pneumatic Fracturing Extraction℠ and Catalytic Oxidation. V1, 24
PO*WW*ER™ Technology. V1, 178
Portable Gas Analyzer/HP Micro GC. V3, 40
Praxis Environmental Technologies, Inc.. . . . . V1, 216
Precipitation, Microfiltration, and Sludge Dewatering. V1, 74
Process Technologies Incorporated. V1, 218
PSI Technologies, A Division of Physical Sciences Inc.. . . . . V2, 88
Pulse Sciences, Inc. (X-Ray Treatment of Aqueous Solutions). V2, 90
Pulse Sciences, Inc. (X-Ray Treatment of Organically Contaminated Soils). V2, 132
Purus, Inc. (see Thermatrix, Inc.). V2, 102
PYRETON® Thermal Destruction V1, 22
PYROKILN THERMAL ENCAPSULATION Process. V2, 100
Quadrel Services, Inc.. . . . . V3, 54
Radian International LLC.. . . . . V1, 138
Radio Frequency Heating (from ITT Research Institute/Brown and Root Environmental). V1, 102
Radio Frequency Heating (from KAI Technologies, Inc./Brown and Root Environmental). V1, 106
Radiometer Analytical Group. V3, 58
Rapid Optical Screening Tool. V3, 30
RaPID Assay® V3, 72
Reactive Barrier. V1, 194
Reactor Filter System. V2, 42
RECRA Environmental, Inc.. . . . . V2, 92
Recycling Sciences International, Inc.. . . . . V1, 220
Reductive Photo-Dechlorination Treatment. V2, 38

TRADE NAME INDEX (Continued)

Reductive Thermal and Photo-Thermal Oxidation Processes for Enhanced Conversion of Chlorocarbons. V2, 122
Remediation Technologies, Inc. (Liquid and Solids Biological Treatment). V1, 140
Remediation Technologies, Inc. (Biofilm Reactor for Chlorinated Gas Treatment). V2, 94
Resource Management & Recovery. V2, 96
Rochem Disc Tube™ Module System V1, 142
Rochem Separation Systems, Inc... . . . . V1, 142
Rocky Mountain Remediation Services, L.L.C.. . . . . V1, 222
The SABRE™ (Simplot Anaerobic Biological Remediation) Process V1, 146
Sandia National Laboratories. V1, 224
SBP Technologies, Inc... . . . . V1, 144
SCAPS Cone Penetrometer V3, 64
Scentograph Plus II Portable Gas Chromatograph.. . . . . V3, 60
SCITEC Corporation (see C-THRU Technologies Corporation). V3, 22
SEFA-P (Source Excited Fluorescence Analyzer-Portable) V3, 42
Segmented Gate System. V2, 134
Selentec Environmental Technologies, Inc.. . . . . V1, 226
Selentec MAG*SEP℠ Technology. V1, 226
Sentex Systems, Inc... . . . . V3, 60
Sevenson Environmental Services, Inc.. . . . . V1, 228
Shirco Infrared Systems, Inc. (see Gruppo Italimpresse) V1, 92
Silicate Technology Corporation (see STC Remediation, Inc.). V1, 156
J.R. Simplot Company.. . . . . V1, 146
Simulprobe® Technologies, Inc... . . . . V3, 62
Site Characterization and Analysis Penetrometer System (SCAPS).. . . . . V3, 76
Sive Services. V1, 230
Smelting Lead-Containing Waste. V2, 34
Smith Environmental Technologies Corporation.. . . . . V1, 148
Soil and Sediment Washing. V1, 26
Soil Recycling.. . . . . V1, 164
Soil Rescue Remediation Fluid. V1, 232
Soil Separation and Washing Process. V2, 16
Soiltech ATP Systems, Inc... . . . . V1, 150
Soil Washing Process. V1, 42
Soil Washing System. V1, 40
Solidification and Stabilization (from Chemfix Technologies, Inc.). V1, 50
Solidification and Stabilization (from Soliditech, Inc.). V1, 152
Solidification and Stabilization (from Wastech, Inc.). V1, 172
Soliditech, Inc... . . . . V1, 152
Solvated Electron Technology, SET™ Remediation System. V1, 56
Solvent Extraction Treatment System.. . . . . V1, 158
Sonotech, Inc... . . . . V1, 154
Space and Naval Warfare Systems Center.. . . . . V3, 64
Spent Ore Bioremediation Process. V1, 214
SRI Instruments.. . . . . V3, 66
Star Organics, L.L.C.. . . . . V1, 232
State University of New York at Oswego, Environmental Research Center. V2, 98
Steam Injection and Vacuum Extraction. V1, 230

TRADE NAME INDEX (Continued)

STC Remediation, Inc... V1, 156
Steam Enhanced Recovery Process. V1, 100
Strategic Diagnostic, Inc. (Ensys Penta Test System).. V3, 68
Strategic Diagnostic, Inc. (EnviroGard™ PCB Immunoassay Test Kit).. V3, 70
Strategic Diagnostic, Inc. (RaPid Assay®).. V3, 72
Subsurface Volatilization and Ventilation System (SVVS®). V1, 30
Supercritical Extraction/Liquid Phase Oxidation. V2, 62
Surfactant Enhanced Aquifer Remediation of Nonaqueous Phase Liquids. V1, 192
Svedala Industries, Inc.. V2, 100
TECHXTRACT® Process V1, 20
Tekno Associates Bioslurry Reactor. V2, 72
Terra-Kleen Response Group, Inc... V1, 158
TERRAMET® Soil Remediation System V1, 52
Terra Vac.. V1, 160
Test Kits for Organic Contaminants in Soil and Water. V3, 38
Texaco Gasification Process.. V1, 162
Texaco Inc... V1, 162
THERM-O-DETOX® System V1, 116
Thermal Desorption System. V1, 112
Thermal Desorption Unit. V1, 70
Thermatrix, Inc.. V2, 102
Thermo Nutech, Inc.. V2, 134
TMA Thermo Analytical, Inc. (See Thermo Nutech, Inc.). V2, 134
TN 9000 and TN Pb X-Ray Fluorescence Analyzers.. V3, 74
TN Spectrace.. V3, 74
Toronto Harbour Commission.. V1, 162
Tri-Services.. V3, 76
Trinity Environmental Technologies, Inc.. V2, 104
Two-Zone, Plume Interception, In Situ Treatment Strategy. V2, 50
Ultrasonic-Aided Leachate Treatment. V2, 24
Ultraviolet Radiation and Oxidation. V1, 168
Ultrox, A Division of Zimpro Environmental, Inc. (see U.S. Filter/WTS Ultrox). V1, 168
United States Environmental Protection Agency (Excavation Techniques and Foam Suppression Methods).. V1, 166
United States Environmental Protection Agency (Field Analytical Screening Program-PCB Method).. V3, 78
United States Environmental Protection Agency (Field Analytical Screening Program-PCP Method).. V3, 80
University of Houston. V2, 136
University of Dayton Research Institute. V2, 106
University of Nebraska-Lincoln. V1, 170
University of South Carolina. V2, 108
University of Washington. V2, 110
University of Wisconsin-Madison. V2, 138
U.S. Air Force. V1, 234
U.S. Filter/WTS Ultrox.. V1, 168
U.S. Filter/Zimpro Inc. (see U.S. Filter/WTS Ultrox).. V1, 168
UV Technologies, Inc.. V2, 112
UVB System-Vacuum Vaporized Well V1, 176
Vacuum-Vaporized Well System. V1, 128
VaporSep® Membrane Process V2, 80

TRADE NAME INDEX (Continued)

Vitrification Process. V1, 236
Volume Reduction Unit. V1, 118
Vortec Corporation. V1, 236
Vulcan Peroxidation Systems, Inc. (see Calgon Carbon Advanced Oxidation Technologies) V1, 46
W.L. Gore and Associates, Inc... . . . . V3, 82
Waste Vitrification Through Electric Melting. V2, 46
Wastech, Inc.. . . . . V1, 172
Western Product Recovery Group, Inc.. . . . . V2, 114
Roy F. Weston, Inc. (Low Temperature Thermal Treatment System). V1, 174
Roy F. Weston, Inc. (Ambersorb® 563 Adsorbent). V2, 116
Roy F. Weston, Inc./IEG Technologies. V1, 176
Wheelabrator Clean Air Systems, Inc.. . . . . V1, 178
Xerox Corporation. V1, 180
X-Ray Treatment of Aqueous Solutions. V2, 90
X-Ray Treatment of Organically Contaminated Soils. V2, 132
X*TRAX™ Thermal Desorption. V1, 136
XL Spectrum Analyzer. V3, 52
Xontech Incorporated.. . . . . V3, 84
XonTech Sector Sampler.. . . . . V3, 84
ZenoGem™ Process V1, 184
Zenon Environmental Inc. (ZenoGem™ Process). V1, 184
Zenon Environmental Inc. (Cross-flow Pervaporation System). V1, 182

APPLICABILITY INDEX

Media	Contaminants	Treatment Type	Technology Vendor	Technology	Volume, Page Number
Air	Aromatic VOCs	Biological Degradation	Media & Process Technology	Bioscrubber	V2,78
			Remediation Technologies, Inc.	Biofilm Reactor for Chlorinated Gas Treatment	V2,94
		Materials Handling	U.S. EPA	Excavation Techniques and Foam Suppression Methods	V1,166
		Physical/ Chemical	ARS Technologies, Inc.	Pneumatic Fracturing Extraction and Catalytic Oxidation	V1,24
			Energia, Inc.	Reductive Thermal and Photo-Thermal Oxidation for Enhanced Conversion of Chlorocarbons	V2,122
			KSE, Inc.	Adsorption-Integrated-Reaction Process	V1,200/ V2,24
			Matrix Photocatalytic Inc.	Photocatalytic Air Treatment	V1,206
			Membrane Technology and Research, Inc.	VaporSep® Membrane Process	V2,80
			Xerox Corporation	2-PHASE™ EXTRACTION Process	V1,180
		Portable Gas Chromatographs	Bruker Analytical Systems, Inc.	Mobile Environmental Monitor	V3,20
			HNU Systems, Inc.	HNU GC 311D Portable Gas Chromatograph	V3,42
			Microsensor Systems, Incorporated	MSI-301A Vapor Monitor	V3,50
			Hewlitt-Packard Company Analytical Instruments	Portable Gas Analyzer	V3,40
			Photovac Monitoring Instruments	PE Photovac Voyager Portable Gas Chromatograph	V3,56
			Sentex Sensing Technology, Inc.	Scentograph Plus II Portable Gas Chromatograph	V3,60
			SRI Instruments	Compact Gas Chromatograph	V3,66
		Spectrometers	Graseby Ionics, Ltd. and PCP Inc.	Ion Mobility Spectrometry	V3,36
			XonTech, Inc.	XonTech Sector Sampler	V3,84
		Thermal Destruction	Sonotech, Inc.	Frequency-Tunable Pulse Combustion System	V1,154
			U. of Dayton Research Institute	Photothermal Detoxification Unit	V2,106
	Dioxins	Materials Handling	U.S. EPA	Excavation Techniques and Foam Suppression Methods	V1,166
		Physical/ Chemical Treatment	Matrix Photocatalytic Inc.	Photocatalytic Air Treatment	V1,206
		Portable Gas Chromatographs	Bruker Analytical Systems, Inc.	Mobile Environmental Monitor	V3,20
		Spectrometers	Graseby Ionics Ltd., and PCP, Inc.	Ion Mobility Spectrometry	V3,36

APPLICABILITY INDEX (continued)

Media	Contaminants	Treatment Type	Technology Vendor	Technology	Volume, Page Number
Air (continued)	Dioxins (continued)	Thermal Destruction	Energy and Environmental Research Corp.	Reactor Filter System	V2,42
			U. of Dayton Research Institute	Photothermal Detoxification Unit	V2,106
	Furans	Materials Handling	U.S. EPA	Excavation Techniques and Foam Suppression Methods	V1,166
		Physical/ Chemical Treatment	Matrix Photocatalytic Inc.	Photocatalytic Air Treatment	V1,206
		Portable Gas Chromatographs	Bruker Analytical Systems, Inc.	Mobile Environmental Monitor	V3,20
		Spectrometers	Graseby Ionics, Ltd., and PCP, Inc.	Ion Mobility Spectrometry	V3,36
		Thermal Destruction	Energy and Environmental Research Corp.	Reactor Filter System	V2,42
			U. of Dayton Research Institute	Photothermal Detoxification Unit	V2,106
	Halogenated VOCs	Biological Degradation	Remediation Technologies, Inc.	Biofilm Reactor for Chlorinated Gas Treatment	V2,94
		Materials Handling	U.S. EPA	Excavation Techniques and Foam Suppression Methods	V1,166
		Physical/ Chemical Thermal Desorption	Process Technologies, Inc.	Photolytic Destruction of Vapor-Phase Halogens	V1,218
		Physical/ Chemical Treatment	ARS Technologies, Inc.	Pneumatic Fracturing Extraction™ and Catalytic Oxidation	V1,24
			Arizona State U./ Zentox Corp.	Photocatalytic Oxidation with Air Stripping	V2,18
			Energia, Inc.	Reductive Photo-Dechlorination Treatment	V2,38
			Energia, Inc.	Reductive Thermal and Photo-Thermal Oxidation Processes for Enhanced Conversion of Chlorocarbons	V2,122
			KSE, Inc.	Adsorption-Integrated-Reaction Process	V1,200/ V2,24
			Matrix Photocatalytic Inc.	Photocatalytic Air Treatment	V1,206
			Membrane Technology and Research, Inc.	VaporSep® Membrane Process	V2,80
			Thermatrix, Inc.	Photolytic Oxidation Process	V2,102
			Roy F. Weston, Inc.	Ambersorb® 563 Adsorbent	V2,116
			Xerox Corp.	2-PHASE™ EXTRACTION Process	V1,180
		Portable Gas Chromatographs	Bruker Analytical Systems, Inc.	Mobile Environmental Monitor	V3,20
			Photovac Monitoring Instruments	PE Photovac Voyager Portable Gas Chromatograph	V3,56
			Sentex Sensing Technology, Inc.	Scentograph Plus II Portable Gas Chromatograph	V3,60

APPLICABILITY INDEX (continued)

Media	Contaminants	Treatment Type	Technology Vendor	Technology	Volume, Page Number
Air (continued)	Halogenated VOCs (continued)	Portable Gas Chromatographs (continued)	SRI Instruments	Compact Gas Chromatograph	V3,66
		Spectrometers	Graseby Ionics, Ltd., and PCP, Inc.	Ion Mobility Spectrometry	V3,36
			XonTech, Inc.	XonTech Sector Sampler	V3,84
		Thermal Destruction	U. of Dayton Research Institute	Photothermal Detoxification Unit	V2,106
	Herbicides	Materials Handling	U.S. EPA	Excavation Techniques and Foam Suppression Methods	V1,166
		Physical/ Chemical Treatment	Matrix Photocatalytic Inc.	Photocatalytic Air Treatment	V1,206
		Portable Gas Chromatographs	Bruker Analytical Systems, Inc.	Mobile Environmental Monitor	V3,20
		Spectrometers	Graseby Ionics, Ltd., and PCP, Inc.	Ion Mobility Spectrometry	V3,36
		Thermal Destruction	U. of Dayton Research Institute	Photothermal Detoxification Unit	V2,106
	Mercury	Contaminant Survey systems	Quadrel Srvices, Inc.	Emflux® Soil-Gas Survey System	V3,54
	Metals	Materials Handling	U.S. EPA	Excavation Techniques and Foam Suppression Methods	V1,166
		Physical/ Chemical Treatment	General Atomics, Nuclear Remediation Technologies Division	Acoustic Barrier Particulate Separator	V2,48
			Matrix Photocatalytic Inc.	Photocatalytic Air Treatment	V1,206
		Portable Gas Chromatographs	HNU Systems, Inc.	HNU GC 311D Portable Gas Chromatograph	V3,42
			Microsensor Systems, Incorporated	MSI-301A Vapor Monitor	V3,50
			Hewlitt-Packard Company	Portable Gas Analyzer	V3,40
		Thermal Destruction	American Combustion, Inc.	PYRETRON® Thermal Destruction	V1,22
			Energy and Environmental Research Corporation	Reactor Filter Systems	V2,42
	PAHs	Portable Gas Chromatographs	Bruker Analytical Systems, Inc.	Mobile Environmental Monitor	V3,20
			SRI Instruments	Compact Gas Chromatograph	V3,66
	PCBs	Materials Handling	U.S. EPA	Excavation Techniques and Foam Suppression Methods	V1,166
		Physical/ Chemical Treatment	Matrix Photocatalytic Inc.	Photocatalytic Air Treatment	V1,206
		Portable Gas Chromatographs	Bruker Analytical Systems, Inc.	Mobile Environmental Monitor	V3,20
			HNU Systems, Inc.	HNU GC 311D Portable Gas Chromatograph	V3,42

APPLICABILITY INDEX (continued)

Media	Contaminants	Treatment Type	Technology Vendor	Technology	Volume, Page Number
Air (continued)	PCBs (continued)	Portable Gas Chromatographs (continued)	Microsensor Systems, Incorporated	MSI-301A Vapor Monitor	V3,50
			Hewlitt-Packard Company	Portable Gas Analyzer	V3,40
			Sentex Technology, Inc.	Scentograph Plus II Portable Gas Chromatograph	V3,60
			SRI Instruments	Compact Gas Chromatograph	V3,66
		Spectrometers	Graseby Ionics, Ltd., and PCP Inc.	Ion Mobility Spectrometry	V3,36
		Thermal Destruction	U. of Dayton Research Institute	Photothermal Detoxification Unit	V2,106
	Pesticides	Materials Handling	U.S. EPA	Excavation Techniques and Foam Suppression Methods	V1,166
		Physical/ Chemical Treatment	Matrix Photocatalytic Inc.	Photocatalytic Air Treatment	V1,206
		Portable Gas Chromatographs	Bruker Analytical Systems, Inc.	Mobile Environmental Monitor	V3,20
			Sentex Sensing Technology, Inc.	Scentograph Plus II Portable Gas Chromatograph	V3,60
			SRI Instruments	Compact Gas Chromatograph	V3,66
		Spectrometers	Graseby Ionics, Ltd., and PCP, Inc.	Ion Mobility Spectrometry	V3,36
		Thermal Destruction	U. of Dayton Research Institute	Photothermal Detoxification Unit	V2,106
	Petroleum Hydrocarbons	Portable Gas Chromatographs	SRI Instruments	Compact Gas Chromatographs	V3,66
	SVOCs	Contaminant Survey Systems	Quadrel Srvices, Inc.	Emflux® Soil-Gas Survey System	V3,54
		Materials Handling	U.S. EPA	Excavation Techniques and Foam Suppression Methods	V1,166
		Physical/ Chemical Thermal Desorption	Process Technologies, Inc.	Photolytic Destruction of Vapor-Phase Halogens	V1,218
		Physical/ Chemical Treatment	ARS Technologies, Inc.	Pneumatic Fracturing Extraction™ and Catalytic Oxidation	V1,24
			Energia, Inc.	Reductive Thermal and Photo-Thermal Oxidation Processes for Enhanced Conversion of Chlorocarbons	V2,122
			Xerox Corp.	2-PHASE™ EXTRACTION Process	V1,180
		Portable Gas Chromatographs	Bruker Analytical Systems, Inc.	Mobile Environmental Monitor	V3,20
		Spectrometers	Graseby Ionics, Ltd., and PCP, Inc.	Ion Mobility Spectrometry	V3,36
			XonTech, Inc.	XonTech Sector Sampler	V3,84
		Thermal Destruction	Sonotech, Inc.	Frequency-Turnable Pulse Combustion System	V1,154
			U. of Dayton Research Institute	Photothermal Detoxification Unit	V2,106

APPLICABILITY INDEX (continued)

Media	Contaminants	Treatment Type	Technology Vendor	Technology	Volume, Page Number
Air (continued)	SVOCs (continued)	Biological Degradation	Media & Process Technology	Bioscrubber	V2,78
		Contaminant Survey systems	Quadrel Srvices, Inc.	Emflux® Soil-Gas Survey System	V3,54
		Materials Handling	U.S. EPA	Excavation Techniques and Foam Suppression Methods	V1,166
		Physical/ Chemical Thermal Desorption	Process Technologies, Inc.	Photolytic Destruction of Vapor-Phase Halogens	V1,218
		Physical/ Chemical Treatment	ARS Technologies, Inc.	Pneumatic Fracturing Extraction™ and Catalytic Oxidation	V1,24
			Arizona State U./ Zentox Corp.	Photocatalytic Oxidation with Air Stripping	V2,18
			Energia, Inc.	Reductive Photo-Dechlorination Treatment	V2,38
			Energia, Inc.	Reductive Thermal and Photo-Thermal Oxidation Processes for Enhanced Conversion of Chlorocarbons	V2,122
			KSE, Inc.	Adsorption-Integrated-Reaction Process	V1,200/ V2,24
			Matrix Photocatalytic Inc.	Photocatalytic Air Treatment	V1,206
			Membrane Technology and Research, Inc.	VaporSep® Membrane Process	V2,80
			Thermatrix, Inc.	Photolytic Oxidation Process	V2,102
			Roy F. Weston, Inc.	Ambersorb® 563 Adsorbent	V2,116
			Xerox Corp.	2-PHASE™ EXTRACTION Process	V1,180
		Portable Gas Chromatographs	Bruker Analytical Systems, Inc.	Mobile Environmental Monitor	V3,20
			HNU Systems, Inc.	HNU GC 311D Portable Gas Chromatograph	V3,42
			Microsensor Systems, Incorporated	MSI-301A Vapor Monitor	V3,50
			Hewlitt-Packard Company	Portable Gas Analyzer	V3,40
			Photovac Monitoring Instruments	PE Photovac Voyager Portable Gas Chromatograph	V3,56
			Sentex Sensing Technology, Inc.	Scentograph Plus II Portable Gas Chromatograph	V3,60
			SRI Instruments	Compact Gas Chromatograph	V3,66
		Spectrometers	Environmental Technologies Group, Inc.	AirSentry Fourier Transform Infrared Spectrometer	V3,28
			Graseby Ionics, Ltd., and PCP, Inc.	Ion Mobility Spectrometry	V3,36
			XonTech, Inc.	XonTech Sector Sampler	V3,84
		Thermal Destruction	Sonotech, Inc.	Frequency-Tunable Pulse Combustion System	V1,154

APPLICABILITY INDEX (continued)

Media	Contaminants	Treatment Type	Technology Vendor	Technology	Volume, Page Number
Gas	Aromatic VOCs	Biological Degradation	Media & Process Technology	Bioscrubber	V2,78
			Remediation Technologies, Inc.	Biofilm Reactor for Chlorinated Gas Treatment	V2,94
		Materials Handling	U.S. EPA	Excavation Techniques and Foam Suppression Methods	V1,166
		Physical/ Chemical Treatment	ARS Technologies, Inc.	Pneumatic Fracturing Extraction™ and Catalytic Oxidation	V1,24
			Energia, Inc.	Reductive Thermal and Photo-Thermal Oxidation Processes for Enhanced Conversion of Chlorocarbons	V2,122
			KSE, Inc.	Adsorption-Integrated-Reaction process	V1,200/ V2,24
			Matrix Photocatalytic Inc.	Photocatalytic Air Treatment	V1,206
			Membrane Technology and Research, Inc.	VaporSep® Membrane Process	V2,80
			Xerox Corp.	2-PHASE™ EXTRACTION Process	V1,180
		Portable Gas Chromatographs	Bruker Analytical Systems, Inc.	Mobile Environmental Monitor	V3,20
			HNU Systems, Inc.	HNU GC 311D Portable Gas Chromatograph	V3,42
			Microsensor Systems, Incorporated	MSI-301A Vapor Monitor	V3,50
			Hewlitt-Packard Company	Portable Gas Analyzer	V3,40
			Photovac Monitoring Instruments	PE Photovac Voyager Portable Gas Chromatograph	V3,56
			Sentex Sensing Technology, Inc.	Scentograph Plus II Portable Gas Chromatograph	V3,60
			SRI Instruments	Compact Gas Chromatograph	V3,66
		Spectrometers	Graseby Ionics, Ltd.	Ion Mobility Spectrometry	V3,36
			XonTech, Inc.	XonTech Sector Sampler	V3,84
		Thermal Destruction	Sonotech, Inc.	Frequency-Turnable Pulse Combustion System	V1,154
			U. of Dayton Research Institute	Photothermal Detoxification Unit	V2,106
	Dioxins	Materials Handling	U.S. EPA	Excavation Techniques and Foam Suppression Methods	V1,166
		Physical/ Chemical Treatment	Matrix Photocatalytic Inc.	Photocatalytic Air Treatment	V1,206
		Portable Gas Chromatographs	Bruker Analytical Systems, Inc.	Mobile Environmental Monitor	V3,20
		Spectrometers	Graseby Ionics, Ltd., and PCP, Inc.	Ion Mobility Spectrometry	V3,36
		Thermal Destruction	Energy and Environmental Research Corp.	Reactor Filter System	V2,42

APPLICABILITY INDEX (continued)

Media	Contaminants	Treatment Type	Technology Vendor	Technology	Volume, Page Number
Gas (continued)	Dioxins (continued)	Thermal Destruction (continued)	U. of Dayton Research Institute	Photothermal Detoxification Unit	V2,106
	Furans	Materials Handling	U.S. EPA	Excavation Techniques and Foam Suppression Methods	V1,166
		Physical/ Chemical Treatment	Matrix Photocatalytic Inc.	Photocatalytic Air Treatment	V1,206
		Portable Gas Chromatographs	Bruker Analytical Systems, Inc.	Mobile Environmental Monitor	V3,20
		Spectrometers	Graseby Ionics, Ltd., and PCP, Inc.	Ion Mobility Spectrometry	V3,36
		Thermal Destruction	Energy and Environmental Research Corp.	Reactor Filter System	V2,42
	Halogenated VOCs	Biological Degradation	U. of Dayton Research Institute	Photothermal Detoxification Unit	V2,106
			Remediation Technologies, Inc.	Biofilm Reactor for Chlorinated Gas Treatment	V2,94
		Materials Handling	U.S. EPA	Excavation Techniques and Foam Suppression Methods	V1,166
		Physical/ Chemical Thermal Desorption	Process Technologies, Inc.	Photolytic Destruction of Vapor-Phase Halogens	V1,218
		Physical/ Chemical Treatment	ARS Technologies, Inc.	Pneumatic Fracturing Extraction™ and Catalytic Oxidation	V1,24
			Arizona State U./ Zentox Corp.	Photocatalytic Oxidation with Air Stripping	V2,18
			Energia, Inc.	Reductive Photo-Dechlorination Treatment	V2,38
			Energia, Inc.	Reductive Thermal and Photo-Thermal Oxidation process for Enhanced Conversion of Chlorocarbons	V2,122
			KSE, Inc.	Adsorption-Integrated-Reaction Process	V1,200/ V2,24
			Matrix Photocatalytic Inc.	Photocatalytic Air Treatment	V1,206
			Membrane Technology and Research, Inc.	VaporSep® Membrane Process	V2,80
			Thermatrix, Inc.	Photolytic Oxidation Process	V2,102
			Roy F. Weston, Inc.	Ambersorb® 563 Adsorbent	V2,116
			Xerox Corp.	2-PHASE™ EXTRACTION Process	V1,180
		Portable Gas Chromatographs	Bruker Analytical Systems, Inc.	Mobile Environmental Monitor	V3,20
			Photovac Monitoring Instruments	PE Photovac Voyager Portable Gas Chromatograph	V3,56
			Sentex Sensing Technology, Inc.	Scentograph Plus II Portable Gas Chromatograph	V3,60
			SRI Instruments	Compact Gas Chromatograph	V3,66
		Spectrometers	Graseby Ionics, Ltd., and PCP, Inc.	Ion Mobility Spectrometry	V3,36

APPLICABILITY INDEX (continued)

Media	Contaminants	Treatment Type	Technology Vendor	Technology	Volume, Page Number
Gas (continued)	Halogenated VOCs (continued)	Spectrometers (continued)	XonTech, Inc.	XonTech Sector Sampler	V3,84
		Thermal Destruction	U. of Dayton Research Institute	Photothermal Detoxification Unit	V2,106
	Heavy Metals	Portable Gas Chromatographs	Bruker Analytical Systems, Inc.	Mobile Environmental Monitor	V3,20
	Herbicides	Materials Handling	U.S. EPA	Excavation Techniques and Foam Suppression Methods	V1,166
		Physical/ Chemical Treatment	Matrix Photocatalytic Inc.	Photocatalytic Air Treatment	V1,206
		Portable Gas Chromatographs	Bruker Analytical Systems, Inc.	Mobile Environmental Monitor	V3,20
		Spectrometers	Graseby Ionics, Ltd., and PCP, Inc.	Ion Mobility Spectrometry	V3,36
		Thermal Destruction	U. of Dayton Research Institute	Photothermal Detoxification Unit	V2,106
	Metals	Materials Handling	U.S. EPA	Excavation Techniques and Foam Suppression Methods	V1,166
		Physical/ Chemical Treatment	General Atomics, Nuclear Remediation Technologies Div.	Acoustic Barrier Particulate Separator	V2,48
			Matrix Photocatalytic Inc.	Photocatalytic Air Treatment	V1,206
		Portable Gas Chromatographs	HNU Systems, Inc.	HNU GC 311D Portable Gas Chromatograph	V3,42
			Microsensor Systems, Incorporated	MSI-301A Vapor Monitor	V3,50
			Hewlitt-Packard Company	Portable Gas Analyzer	V3,40
		Thermal Destruction	American Combustion, Inc.	PYRETRON® Thermal Destruction	V1,22
			Energy and Environmental Research Corp.	Reactor Filter System	V2,42
	PAHs	Portable Gas Chromatographs	Bruker Analytical Systems, Inc.	Mobile Environmental Monitor	V3,20
			SRI Instruments	Compact Gas Chromatograph	V3,66
	PCBs	Materials Handling	U.S. EPA	Excavation Techniques and Foam Suppression Methods	V1,166
		Physical/ Chemical Treatment	Matrix Photocatalytic, Inc.	Photocatalytic Air Treatment	V1,206
		Portable Gas Chromatographs	Bruker Analytical Systems, Inc.	Mobile Environmental Monitor	V3,20
			HNU Systems, Inc.	HNU GC 311D Portable Gas Chromatograph	V3,42
			Microsensor Systems, Incorporated	MSI-301A Vapor Monitor	V3,50
			Hewlitt-Packard Company	Portable Gas Analyzer	V3,40

APPLICABILITY INDEX (continued)

Media	Contaminants	Treatment Type	Technology Vendor	Technology	Volume, Page Number
Gas (contnued)	PCBs (continued)	Portable Gas Chromatographs (continued)	Sentex Sensing Technology, Inc.	Scentograph Plus II Portable Gas Chromatograph	V3,60
			SRI Instruments	Compact Gas Chromatograph	V3,66
		Spectrometers	Graseby Ionics, Ltd., and PCP, Inc.	Ion Mobility Spectrometry	V3,36
		Thermal Destruction	U. of Dayton Research Institute	Photothermal Detoxification Unit	V2,106
	Pesticides	Material Handling	U.S. EPA	Excavation Techniques and Foam Suppression Methods	V1,166
		Physical/ Chemical Treatment	Matrix Photocatalytic, Inc.	Photocatalytic Air Treatment	V1,206
		Portable Gas Chromatographs	Bruker Analytical Systems, Inc.	Mobile Environmental Monitor	V3,20
			Sentex Sensing Technology, Inc.	Scentograph Plus II Portable Gas Chromatograph	V3,60
			SRI Instruments	Compact Gas Chromatograph	V3,66
		Spectrometers	Graseby Ionics, Ltd., and PCP, Inc.	Ion Mobility Spectrometry	V3,36
	Petroleum Hydrocarbons	Thermal Destruction	U. of Dayton Research Institute	Photothermal Detoxification Unit	V2,106
		Portable Gas Chromatograph	SRI Instruments	Compact Gas Chromatograph	V3,66
	SVOCs	Material Handling	U.S. EPA	Excavation Techniques and Foam Suppression Methods	V1,166
		Physical/ Chemical Thermal Desorption	Process Technologies, Inc.	Photolytic Destruction of Vapor-Phase Halogens	V1,218
		Physical/ Chemical Treatment	ARS Technologies, Inc.	Pneumatic Fracturing Extraction™ and Catalytic Oxidation	V1,24
			Energia, Inc.	Reductive Thermal and Photo-Thermal Oxidation Processes for Enhanced Conversion of Chlorocarbons	V2,122
			Xerox Corp.	2-PHASE™ EXTRACTION Process	V1,180
		Portable Gas Chromatographs	Bruker Analytical Systems, Inc.	Mobile Environmental Monitor	V3,20
		Spectrometers	Graseby Ionics, Ltd., and PCP, Inc.	Ion Mobility Spectrometry	V3,36
			XonTech, Inc.	XonTech Sector Sampler	V3,84
		Thermal Destruction	Sonotech, Inc.	Frequency-Turnable Pulse Combustion System	V1,154
			U. of Dayton Research Institute	Photothermal Detoxification Unit	V2,106
	VOCs	Biological Degradation	Media & Process Technology	Bioscrubber	V2,78
		Materials Handling	U.S. EPA	Excavation Techniques and Foam Suppression Methods	V1,166
		Physical/ Chemical Thermal Desorption	Process Technologies, Inc.	Photolytic Destruction of Vapor-Phase Halogens	V1,218

APPLICABILITY INDEX (continued)

Media	Contaminants	Treatment Type	Technology Vendor	Technology	Volume, Page Number
Gas (continued)	VOCs (continued)	Physical/ Chemical Treatment	ARS Technologies, Inc.	Pneumatic Fracturing Extraction™ and Catalytic Oxidation	V1,24
			Arizona State U/ Zentox Corp.	Photocatalytic Oxidation with Air Stripping	V2,18
			Energia, Inc.	Reductive Photo-Dechlorination Treatment	V2,38
			Energia, Inc.	Reductive Thermal and Photo-Thermal Oxidation Processes for Enhanced Conversion of Chlorocarbons	V2,122
			KSE, Inc.	Adsorption-Integrated-Reaction Process	V1,200/ V2,24
			Matrix Photocatalytic Inc.	Photocatalytic Air Treatment	V1,206
			Membrane Technology and Research, Inc.	VaporSep® membrane Process	V2,80
			Thermatrix, Inc.	Photolytic Oxidation Process	V2,102
			Roy F. Weston, Inc.	Ambersorb® 563 Adsorbent	V2,116
			Xerox Corp.	2-PHASE™ EXTRACTION Process	V1,180
		Portable Gas Chromatographs	Bruker Analytical Systems, Inc.	Mobile Environmental Monitor	V3,20
			HNU Systems, Inc.,	HNU GC 311D Portable Gas Chromatograph	V3,42
			Microsensor Systems, Incorporated	MSI-301A Vapor Monitor	V3,50
			Hewlitt-Packard Company	Portable Gas Analyzer	V3,40
			Photovac Monitoring Instruments	PE Photovac Voyager Portable Gas Chromatograph	V3,56
			Sentex Sensing Technology, Inc.	Scentograph Plus II Portable Gas Chromatograph	V3,60
			SRI Instruments	Compact Gas Chromatograph	V3,66
		Spectrometers	Environmental Technologies Group, Inc.	AirSentry Fourier Transform Infrared Spectrometer	V3,28
			Graseby Ionics, Ltd., and PCP, Inc.	Ion Mobility Spectrometry	V3,36
			XonTech, Inc.	XonTech Sector Sampler	V3,84
		Thermal Destruction	Sonotech, Inc.	Frequency-Turnable Pulse Combustion System	V1,154
Ground water	Aromatic VOCs	Biological Degradation	Harding Lawson Associates	Two-Zone, Plume Interception, In Situ Treatment Technology	V2,48
			Billings and Associates, Inc.	Subsurface Volatilization and Ventilation Systems (SVVS®)	V1,30
			Bio-Rem, Inc.	Augmented in Situ Subsurface Bioremediation Process	V1,34
			Biotrol®	Biological Aqueous Treatment System	V1,38

APPLICABILITY INDEX (continued)

Media	Contaminants	Treatment Type	Technology Vendor	Technology	Volume, Page Number
Ground water (continued)	Aromatic VOCs (continued)	Biological Degradation (continued)	Electrokinetics, Inc.	In Situ Bioremediation by Electrokinetic Injection	V2,120
			New York State Department of Environmental Conservation/R.E. Wright Environmental Inc.	In Situ Bioventing Treatment System	V1,130
			IT Corp.	Oxygen Microbubble In Situ Bioremediation	V2,126
			ZENON Environmental Inc.	ZenoGem™ Process	V1,184
		Contaminant Survey Systems	W.L. Gore and Associates, Inc.	GORE-SORBER Screening Survey	V3,82
		Materials Handling	National Risk Management Research Laboratory, The U. of Cincinnati, and FRX, Inc.	Hydraulic Fracturing	V1,124
		Physical/ Chemical Thermal Desorption	Hughes Environmental Systems, Inc.	Steam Enhanced Recovery Process	V1,100
			NOVATERRA, Inc.	In Situ Soil Treatments (Steam/Air Stripping)	V1,134
			Rochem Separation Systems, Inc.	Rochem Disc Tube™ Module System	V1,142
			SoilTech ATP Systems, Inc.	Anaerobic Thermal Processor	V1,150
		Physical/ Chemical Treatment	ARS Technologies, Inc.	Pneumatic Fracturing Extraction™ and Catalytic Oxidation	V1,24
			CF Systems Corp.	Liquified Gas Solvent Extraction (LG-SX) Technology	V1,48
			High Voltage Environmental Applications, Inc.	High Energy Electron Beam Irradiation	V2,54
			High Voltage Environmental Applications, Inc.	High Energy Electron Irradiation	V1,94
			KSE, Inc.	Adsorption-Integrated-Reaction Process	V1,200/ V2,24
			Matrix Photocatalytic Inc.	Photocatalytic Water Treatment	V1,110
			Pulse Sciences, Inc.	X-ray Treatment of Aqueous Solutions	V2,90
			SBP Technologies, Inc.	Membrane Filtration and Bioremediation	V1,144
			Terra Vac, Inc.	In Situ and Ex Situ Vacuum Extraction	V1,160
			U. of Nebraska - Lincoln	Center Pivot Spray Irrigation System	V1,170
			Roy F. Weston, Inc./IEG Technologies	UVB - Vacuum Vaporizing Well	V1,176

APPLICABILITY INDEX (continued)

Media	Contaminants	Treatment Type	Technology Vendor	Technology	Volume, Page Number
Ground water (continued)	Aromatic VOCs (continued)	Physical/Chemical Treatment (continued)	Xerox Corp.	2-PHASE™ EXTRACTION Process	V1,180
			ZENON Environmental Inc.	Cross-Flow Pervaporation System	V1,182
		Portable Gas Chromatographs	Analytical and Remedial Technology, Inc.	Automated Sampling and Analytical Platform	V3,14
			Bruker Analytical Systems, Inc.	Mobile Environmental Monitor	V3,20
			HNU Systems, Inc.,	HNU GC 311D Portable Gas Chromatograph	V3,42
			Hewlitt-Packard Company	Portable Gas Analyzer	V3,40
			Photovac Monitoring Instruments	PE Photovac Voyager Portable Gas Chromatograph	V3,56
			Sentex Sensing Technology, Inc.	Scentograph Plus II Portable Gas Chromatograph	V3,60
			SRI Instruments	Compact Gas Chromatograph	V3,66
			U.S. EPA	Field Analytical Screening Program - PCB Method	V3,78
		Solidification/ Stabilization	Wheelabrator Clean Air Systems, Inc.	PO*WW*ER™ Technology	V1,178
		Spectrometers	Graseby Ionics, Ltd., and PCP, Inc.	Ion Mobility Spectrometry	V3,36
		Test Kits	Hanby Environmental Laboratory Procedure, Inc.	Test Kits for Organic Contaminants in Soil and Water	V3,38
		Thermal Destruction	Texaco Inc.	Texaco Gasification Process	V1,162
			U. of Dayton Research Institute	Photothermal Detoxification Unit	V2,106
	Cyanide	Biological Degradation	Pintail Systems, Inc.	Spent ore Bioremediation process	V1,214
	Diesel	Materials Handling	National Risk Management Research Laboratory, The U. of Cincinnati, and FRX, Inc.	Hydraulic Fracturing	V1,124
		Physical/ Chemical Thermal Desorption	Geokinetics International, Inc.	Electroheat-Enhanced Nonaqueous Phase Liquids Removal	V1,196
			SIVE Services	Steam Injection and Vacuum Extraction	V1,230
	Dioxins	Physical/ Chemical Thermal Desorption	ELI Eco Logic Inc.	GAS-Phase Chemical Reduction Process	V1,68
			SoilTech ATP Systems, Inc.	Anaerobic Thermal Processor	V1,150
		Physical/ Chemical Treatment	CF Systems Corp.	Liquified Gas Solvent Extraction (LG-SX) Technology	V1,48
			High Voltage Environmental Applications, Inc.	High-Energy Electron Irradiation	V1,94

APPLICABILITY INDEX (continued)

Media	Contaminants	Treatment Type	Technology Vendor	Technology	Volume, Page Number
Ground water (continued)	Dioxins (continued)	Physical/Chemical Treatment (continued)	Matrix Photocatalytic Inc.	Photocatalytic Water Treatment	V1,110
			SBP Technologies, Inc.	Membrane Filtration and Bioremediation	V1,144
		Portable Gas Chromatographs	Bruker Analytical Systems, Inc.	Mobile Environmental Monitor	V3,20
		Solidification/ Stabilization	Wheelabrator Clean Air Systems, Inc.	PO*WW*ER™ Technology	V1,178
		Spectrometers	Graseby Ionics, Ltd., and PCP, Inc.	Ion Mobility Spectrometry	V3,36
		Test Kits	Strategic Diagnostic, Inc. Corp.	RaPID Assay®	V3,72
		Thermal Destruction	BWX Technologies, Inc.	Cyclone Furnace	V1,44
			U. of Dayton Research Institute	Photothermal Detoxification Unit	V2,106
	Explosives	Contaminant Survey Systems	W.L. Gore and Associates, Inc.	GORE-SORBER Screening Survey	V3,82
		Physical/ Chemical Thermal Desorption	New Jersey Institute of Technology	GHEA Associates Process	V2,86
		Physical/ Chemical Treatment	U.S. Filter/WTS Ultrox	Ultraviolet Radiation and Oxidation	V1,168
	Furans	Physical/ Chemical Thermal Desorption	Eli Eco Logic Inc.	Gas-Phase Chemical Reduction Process	V1,68
			SoilTech ATP Systems, Inc.	Anaerobic Thermal Processor	V1,150
		Physical/ Chemical Treatment	CF Systems Corp.	Liquified Gas Solvent Extraction (LG-SX) Technology	V1,48
			High Voltage Environmental Applications, Inc.	High-Energy Electron Irradiation	V1,94
			Matrix Photocatalytic Inc.	Photocatalytic Water Treatment	V1,110
			SBP Technologies, Inc.	Membrane Filtration and Bioremediation	V1,144
		Portable Gas Chromatographs	Bruker Analytical Systems, Inc.	Mobile Environmental Monitor	V3,20
		Solidification/ Stabilization	Wheelabrator Clean Air Systems, Inc.	PO*WW*ER™ Technology	V1,178
		Spectrometers	Graseby Ionics, Ltd., and PCP, Inc.	Ion Mobility Spectrometry	V3,36
		Test Kits	Strategic Diagnostic, Inc. Corp.	RaPID Assay®	V3,72
		Thermal Destruction	BWX Technologies, Inc.	Cyclone Furnace	V1,44
			U. of Dayton Research Institute	Photothermal Detoxification Unit	V2,106
	Gasoline	Contaminant Survey Systems	W.L. Gore and Associates, Inc.	GORE-SORBER Screening Survey	V3,82

APPLICABILITY INDEX (continued)

Media	Contaminants	Treatment Type	Technology Vendor	Technology	Volume, Page Number
Ground water (continued)	Gasoline (continued)	Materials Handling	National Risk Management Research Laboratory, The U. of Cincinnati, and FRX, Inc.	Hydraulic Fracturing	V1,124
		Physical/ Chemical Thermal Desorption	SIVE Services	Steam Injection and Vacuum Extraction	V1,230
	Halogenated VOCs	Biological Degradation	ABB Environmental Services, Inc.	Anaerobic-Aerobic Sequential Bioremediation of PCE	V2,50
			Harding Lawson Associates	Two-Zone, Plume Interception, Inc Situ Treatment Technology	V2,48
			Bio-Rem, Inc.	Augmented in Situ Subsurface Bioremediation Process	V1,34
			Biotrol®, Inc.	Methanotrophic Bioreactor System	V2,28
			Electrokinetics, Inc.	In Situ Bioremediation by Electrokinetic Injection	V2,120
			New York State Department of Environmental Conservation/R.E. Wright Environmental Inc.	In Situ Bioventing Treatment System	V1,130
			IT Corp.	Oxygen Microbubble In Situ Bioremediation	V2,126
			U.S. Air Force	Phytoremediation of TCE-Contaminated Shallow Groundwater	V1,234
			ZENON Environmental Inc.	ZenoGem™ Process	V1,184
		Contaminant Survey Systems	W.L. Gore and Associates, Inc.	GORE-SORBER Screening Survey	V3,82
		Materials Handling	National Risk Management Research Laboratory, The U. of Cincinnati, and FRX, Inc.	Hydraulic Fracturing	V1,124
		Physical Chemical Treatment - Biological Degradation	Lasagna™ Public-Private Partnership	Lasagna™ In Situ Soil Remediation	V1,202
		Physical/ Chemical Thermal Desorption	Hughes Environmental Systems, Inc.	Steam Enhanced Recovery Process	V1,100
			KAI Technologies, Inc./Brown and Root Environmental	Radio Frequency Heating	V1,106
			New Jersey Institute of Technology	GHEA Associates Process	V2,86
			NOVATERRA, Inc.	In Situ Soil Treatments (Steam/Air Stripping)	V1,134
			SoilTech ATP Systems, Inc.	Anaerobic Thermal Processor	V1,150

APPLICABILITY INDEX (continued)

Media	Contaminants	Treatment Type	Technology Vendor	Technology	Volume, Page Number
Ground water (continued)	Halogenated VOCs (continued)	Physical/ Chemical Treatment	ARS Technologies, Inc.	Pneumatic Fracturing Extraction™ and Catalytic Oxidation	V1,24
			Arizona State U./ Zentox Corp.	Photocatalytic Oxidation with Air Stripping	V2,18
			CF Systems Corp.	Liquified Gas Solvent Extraction (LG-SX) Technology	V1,48
			EnviroMetal Technologies, Inc.	In Situ and Ex Situ Metal Enhanced Abiotic Degradation of Dissolved Halogenated Organic Compounds in Groundwater	V1,72
			High Voltage Environmental Applications, Inc.	High Energy Electron Beam Irradiation	V2,54
			High Voltage Environmental Applications, Inc.	High Energy Electron Irradiation	V1,94
			KSE, Inc.	Adsorption-Integrated-Reaction Process	V1,200/ V2,24
			Matrix Photocatalytic Inc.	Photocatalytic Water Treatment	V1,110
			Pulse Sciences, Inc.	X-ray Treatment of Aqueous Solutions	V2,90
			SBP Technologies, Inc.	Membrane Filtration and Bioremediation	V1,144
			Terra Vac, Inc.	In Situ and Ex Situ Vacuum Extraction	V1,160
			U.S. Filter/WTS Ultrox	Ultraviolet Radiation and Oxidation	V1,168
			U. of Nebraska - Lincoln	Center Pivot Spray Irrigation System	V1,170
			UV Technologies, Inc.	PhotoCAT™ Process	V2,112
			Roy F. Weston, Inc.	Ambersorb® 563 Adsorbent	V2,116
			Roy F. Weston, Inc./IEG Technologies	UVB - Vacuum Vaporizing Well	V1,176
			Xerox Corp.	2-PHASE™ EXTRACTION Process	V1,180
			ZENON Environmental Inc.	Cross-Flow Pervaporation System	V1,182
		Portable Gas Chromatographs	Analytical and Remedial Technology, Inc.	Automated Sampling and Analytical Platform	V3,14
			Bruker Analytical Systems, Inc.	Mobile Environmental Monitor	V3,20
			Photovac Monitoring Instruments	PE Photovac Voyager Portable Gas Chromatograph	V3,56
			Sentex Sensing Technology, Inc.	Scentograph Plus II Portable Gas Chromatograph	V3,60
			SRI Instruments	Compact Gas Chromatograph	V3,66
			U.S. EPA	Field Analytical Screening Program - PCB Method	V3,78
		Solidification/ Stabilization	Wheelabrator Clean Air Systems, Inc.	PO*WW*ER™ Technology	V1,178

APPLICABILITY INDEX (continued)

Media	Contaminants	Treatment Type	Technology Vendor	Technology	Volume, Page Number
Ground water (continued)	Halogenated VOCs (continued)	Spectrometers	Graseby Ionics, Ltd., and PCP, Inc.	Ion Mobility Spectrometry	V3,36
		Test Kits	Strategic Diagnostic, Inc. Corp.	RaPID Assay®	V3,72
		Thermal Destruction	Texaco Inc.	Texaco Gasification Process	V1,162
			U. of Dayton Research Institute	Photothermal Detoxification Unit	V2,106
	Heavy Metals	Portable Gas Chromatographs	Bruker Analytical Systems, Inc.	Mobile Environmental Monitor	V3,20
	Herbicides	Biological Degradation	Biotrol®	Biological Aqueous Treatment System	V1,38
			Electrokinetics, Inc.	In Situ Bioremediation by Electrokinetic Injection	V2,120
			Phytokinetics, Inc.	Phytoremediation of Contaminated Soils	V2,128
			ZENON Environmental Inc.	ZenoGem™ Process	V1,184
		Physical Chemical Treatment - Biological Degradation	Lasagna™ Public-Private Partnership	Lasagna™ in Situ Soil Remediation	V1,202
		Physical/ Chemical Thermal Desorption	ELI Eco Logic Inc.	Gas-Phase Chemical Reduction Process	V1,68
			SoilTech ATP Systems, Inc.	Anaerobic Thermal Processor	V1,150
		Physical/ Chemical Treatment	CF Systems Corp.	Liquified Gas Solvent Extraction (LG-SX) Technology	V1,48
			High Voltage Environmental Applications, Inc.	High Energy Electron Irradiation	V1,94
			Matrix Photocatalytic Inc.	Photocatalytic Water Treatment	V1,110
			SBP Technologies, Inc.	Membrane Filtration and Bioremediation	V1,144
		Portable Gas Chromatographs	Bruker Analytical Systems, Inc.	Mobile Environmental Monitor	V3,20
		Solidification/ Stabilization	Wheelabrator Clean Air Systems, Inc.	PO*WW*ER™ Technology	V1,178
		Spectrometers	Graseby Ionics, Ltd., and PCP, Inc.	Ion Mobility Spectrometry	V3,36
		Test Kits	Strategic Diagnostic, Inc.	RaPID Assay®	V3,72
		Thermal Destruction	BWX Technologies, Inc.	Cyclone Furnace	V1,44
			U. of Dayton Research Institute	Photothermal Detoxification Unit	V2,106
	Mercury	Contaminant Survey systems	Quadrel Srvices, Inc.	Emflux® Soil-Gas Survey System	V3,54
	Metals	Biological Degradation	Colorado Dept. of Public Health and Environment	Constructed Wetlands-Based Treatment	V1,54

APPLICABILITY INDEX (continued)

Media	Contaminants	Treatment Type	Technology Vendor	Technology	Volume, Page Number
Ground water (continued)	Metals (continued)	Biological Degradation (continued)	Pintail Systems, Inc.	Biomineralization of Metals	V2,130
			Pintail Systems, Inc.	Spent Ore Bioremediation Process	V1,214
			Resource Management & Recovery	AlgaSORB© Biological Sorption	V2,96
		Field Portable X-ray Fluorescence	Metorex, Inc.	Field Portable X-ray Fluorescence Analysis	V3,48
		Physical Chemical Treatment - Biological Degradation	Lasagna™ Public-Private Partnership	Lasagna™ In Situ Soil Remediation	V1,202
		Physical/ Chemical Radioactive Waste Treatment	Filter Flow Technology, Inc.	Colloid Polishing Filter Method®	V1,76
		Physical/ Chemical Thermal Desorption	New Jersey Institute of Technology	GHEA Associates Process	V2,86
			Rochem Separation Systems, Inc.	Rochem Disc Tube™ Module System	V1,142
		Physical/ Chemical Treatment	Atomic Energy of Canada, Limited	Chemical Treatment and Ultrafiltration	V2,22
			E.I. DuPont de Nemours and Co. and Oberlin Filter Co.	Membrane Microfiltration	V1,60
			Dynaphore, inc.	FORAGER® Sponge	V1,62
			EnviroMetal Technologies, Inc.	Reactive Barrier	V1,194
			EPOC Water, Inc.	Precipitation, Microfiltration, and Sludge Dewatering	V1,74
			Cure International, Inc.	CURE® Electrocoagulation Wastewater Treatment System	V1,58
			Lewis Environmental Services, Inc./ Hickson Corp.	Chromated Copper Arsenate Soil Leaching Process	V2,76
			Matrix Photocatalytic Inc.	Photocatalytic Water Treatment	V1,110
			Morrison Knudsen Corp./Spetstamponazhgeologia Enterprises/STG Technologies	Clay-Base Grouting Technology	V1,114
			RECRA Environmental, Inc.	Alternating Current Electrocoagulation Technology	V2,92
			Selentec Environmental Technologies, Inc.	Selentec MAG*SEP Technology	V1,226
			U. of Washington	Adsorptive Filtration	V2,110
			U. of Wisconsin - Madison	Photoelectrocatalytic Degradation and Removal	V2,138
		Portable Gas Chromatographs	HNU Systems, Inc.	HNU GC 311D Portable Gas Chromatograph	V3,42
			Hewlitt-Packard Company	Portable Gas Analyzer	V3,40

APPLICABILITY INDEX (continued)

Media	Contaminants	Treatment Type	Technology Vendor	Technology	Volume, Page Number
Ground water (continued)	Metals (continued)	Solidification/ Stabilization	Wheelabrator Clean Air Systems, Inc.	PO*WW*ER™ Technology	V1,178
		Thermal Destruction	BWX Technologies, Inc.	Cyclone Furnace	V1,44
	Organics	Physical/Chemical Treatment	Duke Engineering and Services, Inc.	Surfactant Enhanced Aquifer Remediation of Nonaqueous Phase Liquids	V1,192
	PAHs	Contaminant Survey Systems	W.L. Gore and Associates, Inc.	GORE-SORBER Screening Survey	V3,82
		Physical/ Chemical Thermal Desorption	Geokinetics International, Inc.	Electroheat-Enhanced Nonaqueous Phase Liquids Removal	V1,196
			SBP Technologies, Inc.	Membrane Filtration and Bioremediation	V1,144
		Portable Gas Chromatographs	Bruker Analytical Systems, Inc.	Mobile Environmental Monitor	V3,20
			SRI Instruments	Compact Gas Chromatograph	V3,66
	PCBs	Biological Degradation	Institute of Gas Technology	Chemical and Biological Treatment	V2,56
			Phytokinetics, Inc.	Phytoremediation of Contaminated Soils	V2,128
			Phytokinetics, Inc.	Phytoremediation Process	V1,210
			ZENON Environmental Inc.	ZenoGem™ Process	V1,184
		Field Portable X-ray Fluorescence	Metorex, Inc.	Field portable X-ray Fluorescence Analysis	V3,48
		Physical/ Chemical Thermal Desorption	ELI Eco Logic Inc.	Gas-Phase Chemical Reduction Process	V1,68
			KAI Technologies, Inc./Brown and Root Environmental	Radio Frequency Heating	V1,106
			New Jersey Institute of Technology	GHEA Associates Process	V2,86
			SoilTech ATP Systems, Inc.	Anaerobic Thermal Processor	V1,150
		Physical/ Chemical Treatment	Calgon Carbon Oxidation Technologies	perox-pure™ Chemical Oxidation Technology	V1,46
			CF Systems Corp.	Liquified Gas Solvent Extraction (LG-SX) Technology	V1,48
			High Voltage Environmental Applications, Inc.	High-Energy Electron Beam Irradiation	V2,54
			High Voltage Environmental Applications, Inc.	High-Energy Electron Irradiation	V1,94
			Matrix Photocatalytic Inc.	Photocatalytic Water Treatment	V1,110
			Morrison Knudsen Corp./Spetstamponazhgeologia Enterprises/STG Technologies	Clay-Base Grouting Technology	V1,114

APPLICABILITY INDEX (continued)

Media	Contaminants	Treatment Type	Technology Vendor	Technology	Volume, Page Number
Ground water (continued)	PCBs (continued)	Physical/Chemical Treatment (continued)	SBP Technologies, Inc.	Membrane Filtration and Bioremediation	V1,144
			U.S. Filter/WTS Ultrox	Ultraviolet Radiation and Oxidations	V1,168
			U. of Wisconsin - Madison	Photoelectrocatalytic Degradation and Removal	V2,138
		Portable Gas Chromatographs	Bruker Analytical Systems, Inc.	Mobile Environmental Monitor	V3,20
			HNU Systems, Inc.	HNU GC 311D Portable Gas Chromatograph	V3,42
			Hewlitt-Packard Company	Portable Gas Analyzer	V3,40
			Sentex Sensing Technology, inc.	Scentograph Plus II Portable Gas Chromatograph	V3,60
			SRI Instruments	Compact Gas Chromatograph	V3,66
			U.S. EPA	Field Analytical Screening Program - PCB Method	V3,78
		Solidification/ Stabilization	Wheelabrator Clean Air Systems, Inc.	PO*WW*ER™ Technology	V1,178
		Spectrometers	Graseby Ionics, Ltd., and PCP, Inc.	Ion Mobility Spectrometry	V3,36
		Test Kits	Hanby Environmental Laboratory Procedures, Inc.	Test Kits for Organic Contaminants in Soil and Water	V3,38
		Thermal Destruction	BWX Technologies, Inc.	Cyclone Furnace	V1,44
			U. of Dayton Research Institute	Photothermal Detoxification Unit	V2,106
	PCP	Physical/ Chemical Treatment	SBP Technologies, Inc.	Membrane Filtration and Bioremediation	V1,144
			U.S. Filter/WTS Ultrox	Ultraviolet Radiation and Oxidation	V1,168
		Portable Gas Chromatographs	U.S. EPA	Field Analytical Screening Program - PCP Method	V3,80
		Test Kits	Strategic Diagnostic, Inc.	Ensys Penta Test System	V3,68
			Strategic Diagnostic, Inc. Corp.	RaPID Assay®	V3,72
	Pesticides	Biological Degradation	Biotrol®	Biological Aqueous Treatment System	V1,38
			Electrokinetics, Inc.	In Situ Bioremediation by Electrokinetic Injections	V2,120
			Institute of Gas Technology	Chemical and Biological Treatment	V2,56
			Phytokinetics, Inc.	Phytoremediation of Contaminated Soils	V2,128
			Phytokinetics, Inc.	Phytoremediation Process	V1,210
			ZENON Environmental Inc.	ZenoGem™ Process	V1,184
		Contaminant Survey Systems	W.L. Gore and Associates, Inc.	GORE-SORBER Screening Survey	V3,82

APPLICABILITY INDEX (continued)

Media	Contaminants	Treatment Type	Technology Vendor	Technology	Volume, Page Number
Ground water (continued)	Pesticides (continued)	Physical/ Chemical Thermal Desorption	ELI Eco Logic Inc.	Gas-Phase Chemical Reduction Process	V1,68
			KAI Technologies, Inc./Brown and Root Environmental	Radio Frequency heating	V1,106
			SoilTech ATP Systems, Inc.	Anaerobic Thermal Process	V1,150
		Physical/ Chemical Treatment	Calgon Carbon Oxidation Technologies	perox-pure™ Chemical Oxidation Technology	V1,46
			CF Systems Corp.	Liquified Gas Solvent Extraction (LG-SX) Technology	V1,48
			High Voltage Environmental Applications, Inc.	High-Energy Electron Beam Irradiation	V2,54
			High Voltage Environmental Applications, Inc.	High-Energy Electron Irradiation	V1,94
			Matrix Photocatalytic Inc.	Photocatalytic Water Treatment	V1,110
			Morrison Knudsen Corp./Spetstamponazhgeologia Enterprises/STG Technologies	Clay-Base Grouting Technology	V1,114
			SBP Technologies, Inc.	Membrane Filtration and Bioremediation	V1,144
			U.S. Filter/WTS Ultrox	Ultraviolet Radiation and Oxidation	V1,168
			U. of Wisconsin - Madison	Photoelectrocatalytic Degradation and Removal	V2,138
		Portable Gas Chromatographs	Bruker Analytical Systems, Inc.	Mobile Environmental Monitor	V3,20
			Sentex Sensing Technology, Inc.	Scentograph Plus II Portable Gas Chromatograph	V3,60
			SRI Instruments	Compact Gas Chromatograph	V3,66
			U.S. EPA	Field Analytical Screening Program - PCB Method	V3,78
		Solidification/ Stabilization	Wheelabrator Clean Air Systems, Inc.	PO*WW*ER™ Technology	V1,178
		Spectrometers	Graseby Ionics, Ltd., and PCP, Inc.	Ion Mobility Spectrometry	V3,36
		Test Kits	Strategic Diagnostic, Inc.	Ensys Penta Test System	V3,68
			Hanby Environmental Laboratory Procedure, Inc.	Test Kits for Organic Contaminants in Soil and Water	V3,38
		Thermal Destruction	BWX Technologies, Inc.	Cyclone Furnace	V1,44
			U. of Dayton Research Institute	Photothermal Detoxification Unit	V2,106
	Petroleum Hydrocarbons	Contaminant Survey Systems	W.L. Gore and Associates, Inc.	GORE-SORBER Screening Survey	V3,82

APPLICABILITY INDEX (continued)

Media	Contaminants	Treatment Type	Technology Vendor	Technology	Volume, Page Number
Ground water (continued)	Petroleum Hydrocarbons (continued)	Materials Handling	National Risk Management Research Laboratory, the U. of Cincinnati, and FRX, Inc.	Hydraulic Fracturing	V1,124
		Physical/ Chemical Thermal Desorption	New Jersey Institute of Technology	GHEA Associates Process	V2,86
		Physical/ Chemical Treatment	Calgon Carbon Oxidation Technologies	perox-pure™ Chemical Oxidation Technology	V1,46
			Geokinetics International, Inc.	Electroheat-Enhanced Nonaqueous Phase Liquids Removal	V1,196
			SBP Technologies, Inc.	Membrane Filtration and Bioremediation	V1,144
			SIVE Services	Steam Injection and Vacuum Extraction	V1,230
		Portable Gas Chromatographs	SRI Instruments	Compact Gas Chromatograph	V3,66
		Test Kits	Idetek, Inc.	Equate® Immunoassay	V3,46
	Radionuclides	Physical/ Chemical Radioactive Waste Treatment	Filter Flow Technology, Inc.	Colloid Polishing Filter Method	V1,76
		Physical/ Chemical Treatment	Atomic Energy of Canada, Limited	Chemical Treatment and Ultrafiltration	V2,22
			Selentec Environmental Technologies, Inc.	Selentec MAG* SEP Technology	V1,226
		Thermal Destruction	BWX Technologies, Inc.	Cyclone Furnace	V1,44
	SVOCs	Biological Degradation	Harding Lawson Associates	Two-Zone, Plume Interception, In Situ Treatment Technology	V2,48
			Biotrol®	Biological Aqueous Treatment System	V1,38
			Institute of Gas Technology	Chemical and Biological Treatment	V2,56
			New York State Dept. Of Environmental Conservation/R.E. Wright Environmental Inc.	In Situ Bioventing Treatment System	V1,130
			IT Corp.	Oxygen Microbubble In Situ Bioremediation	V2,126
			ZENON Environmental Inc.	ZenoGem™ Process	V1,184
		Contaminant Survey Systems	Quadrel Srvices, Inc.	Emflux Soil-Gas Survey System	V3,54
			W.L. Gore and Associates, Inc.	GORE-SORBER Screening Survey	V3,82
		Physical/ Chemical Thermal Desorption	ELI Eco Logic Inc.	Gas-Phase Chemical Reduction Process	V1,68
			KAI Technologies, Inc./Brown and Root Environmental	Radio Frequency Heating	V1,106

APPLICABILITY INDEX (continued)

Media	Contaminants	Treatment Type	Technology Vendor	Technology	Volume, Page Number
Ground water (continued)	SVOCs (continued)	Physical/Chemical Thermal Desorption (continued)	New Jersey Institute of Technology	GHEA Associates Process	V2,86
			NOVATERRA, Inc.	In Situ Soil Treatments (Steam/ Air Stripping)	V1,134
			SIVE Services	Steam Injection and Vacuum Extraction	V1,230
			SoilTech ATP Systems, Inc.	Anaerobic Thermal Processor	V1,150
		Physical/ Chemical Treatment	ARS Technologies, Inc.	Pneumatic Fracturing Extraction™ and Catalytic Oxidation	V1,24
			Calgon Carbon Oxidation Technologies	perox-pure™ Chemical Oxidation Technology	V1,46
			CF Systems Corp.	Liquified Gas Solvent Extraction (LG-SX) Technology	V1,48
			High Voltage Environmental Applications, Inc.	High-Energy Electron Beam Irradiation	V2,54
			High Voltage Environmental Applications, Inc.	High-Energy Electron Irradiation	V1,94
			Pulse Sciences, Inc.	X-ray Treatment of Aqueous Solutions	V2,90
			SBP Technologies, Inc.	Membrane Filtration and Bioremediation	V1,144
			Terra Vac, Inc.	In Situ and Ex Situ Vacuum Extraction	V1,160
			U. of Wisconsin - Madison	Photoelectrocatalytic Degradation and Removal	V2,138
			Roy F. Weston, Inc./IEG Technologies	UVB - Vacuum Vaporizing Well	V1,176
			Xerox Corp.	2-PHASE™ EXTRACTION Process	V1,180
		Portable Gas Chromatographs	Analytical and Remedial Technology, Inc.	Automated Sampling and Analytical Platform	V3,14
			Bruker Analytical Systems, Inc.	Mobile Environmental Monitor	V3,20
			U.S. EPA	Field Analytical Screening Program - PCB Method	V3,78
		Solidification/ Stabilization	Wheelabrator Clean Air Systems, Inc.	PO*WW*ER™ Technology	V1,178
		Spectrometers	Graseby Ionics, Ltd., and PCP, Inc.	Ion Mobility Spectrometry	V3,36
		Test Kits	Strategic Diagnostic, Inc. Corp.	RaPID Assay®	V3,72
		Thermal Destruction	BWX Technologies, Inc.	Cyclone Furnace	V1,44
			Texaco Inc.	Texaco Gasification process	V1,162
			U. of Dayton Research Institute	Photothermal Detoxification Unit	V2,106
		Other	Berkeley Environmental Restoration Center	In Situ Steam Enhanced Extraction Process	V1,28

APPLICABILITY INDEX (continued)

Media	Contaminants	Treatment Type	Technology Vendor	Technology	Volume, Page Number
Ground water (continued)	VOCs	Biological Degradation	Billings and Associates, Inc.	Subsurface Volatilization and Ventilation System (SVVS®)	V1,30
			Bio-Rem, Inc.	Augmented In Situ Subsurface Bioremediation Process	V1,34
			Biotrol®	Biological Aqueous Treatment System	V1,38
			Electrokinetics, Inc.	In Situ Bioremediation by Electrokinetic Injection	V2,120
			New York State Dept. of Environmental Conservation/R.E. Wright Environmental, Inc.	In Situ Bioventing Treatment System	V1,130
			New York State Department of Environmental Conservation/SBP Technologies	Vacuum-Vaporized Well System	V1,128
			IT Corp.	Oxygen Microbubble In Situ Bioremediation	V2,126
			ITT Night Vision	In Situ Enhanced Bioremediation of Groundwater	V1,198
			Phytokinetics, Inc.	Phytoremediation of Contaminated Soils	V2,128
			Phytokinetics, Inc.	Phytoremediation Process	V1,210
			U.S. Air Force	Phytoremediation of TCE-Contaminated Shallow Groundwater	V1,234
			ZENON Environmental Inc.	ZenoGem™ Process	V1,184
		Contaminant Survey systems	Quadrel Srvices, Inc.	Emflux Soil-Gas Survey System	V3,54
			W.L. Gore and Associates, Inc.	GORE-SORBER Screening Survey	V3,82
		Materials Handling	National Risk Management Research Laboratory, The U. of Cincinnati, and FRX, Inc.	Hydraulic Fracturing	V1,124
		Physical/ Chemical Thermal Desorption	Hughes Environmental Systems, Inc.	Steam Enhanced Recovery Process	V1,100
			KAI Technologies, Inc./Brown and Root Environmental	Radio Frequency Heating	V1,106
			New Jersey Institute of Technology	GHEA Associates Process	V2,86
			NOVATERRA, Inc.	In Situ Soil Treatments (Steam/ Air Stripping)	V1,134
			Rochem Separation Systems, Inc.	Rochem Disc Tube™ Module System	V1,142

APPLICABILITY INDEX (continued)

Media	Contaminants	Treatment Type	Technology Vendor	Technology	Volume, Page Number
Ground water (continued)	VOCs (continued)	Physical/Chemical Thermal Desorption (continued)	SIVE Services	Steam Injection and Vacuum Extraction	V1,230
			SoilTech ATP Systems, Inc.	Anaerobic Thermal Processor	V1,150
		Physical/ Chemical Treatment	ARS Technologies, Inc.	Pneumatic Fracturing Extraction™ and Catalytic Oxidation	V1,24
			Arizona State U./ Zentox Corp.	Photocatalytic Oxidation with Air Stripping	V2,18
			Calgon Carbon Oxidation Technologies	perox-pure™ Chemical Oxidation Technology	V1,46
			CF Systems Corp.	Liquified Gas Solvent Extraction (LG-SX) Technology	V1,48
			EnviroMetal Technologies, Inc.	Reactive Barrier	V1,194
			MACTEC-SBP Technologies Company, L.L.C.	NoVOCs™ In-Well Stripping Technology	V1,204
			EnviroMetal Technologies, Inc.	In Situ and Ex Situ Metal Enhanced Abiotic Degradation of Dissolved Halogenated Organic Compounds in Groundwater	V1,72
			Geokinetics International, Inc.	Electroheat-Enhanced Nonaqueous Phase Liquids Removal	V1,196
			High Voltage Environmental Applications, Inc.	High Energy Electron Irradiation	V1,94
			KSE, Inc.	Adsorption-Integrated-Reaction Process	V1,200/ V2,24
			Matrix Photocatalytic Inc.	Photocatalytic Water Treatment	V1,110
			Morrison Knudsen Corp./Spetstamponazhgeologia Enterprises/STG Technologies	Clay-Base Grouting Technology	V1,114
			Pulse Sciences, Inc.	X-ray Treatment of Aqueous Solutions	V2,90
			Radian International LCC	Integrated Vapor Extraction and Steam Vacuum Stripping and Soil Vapor Extraction/Reinjection	V1,138
			SBP Technologies, Inc.	Membrane Filtration and Bioremediation	V1,144
			Terra Vac, Inc.	In Situ and Ex Situ Vacuum Extraction	V1,160
			U.S. Filter/WTS Ultrox	Ultraviolet Radiation and Oxidation	V1,168
			U. of Nebraska - Lincoln	Center Pivot Spray Irrigation System	V1,170
			UV Technologies, Inc.	PhotoCAT™ Process	V2,112
			Roy F. Weston, Inc.	Ambersorb® 563 Adsorbent	V2,116
			Roy F. Weston, Inc./IEG Technologies	UVB - Vacuum Vaporizing Well	V1,176
			Xerox Corp.	2-PHASE™ EXTRACTION Process	V1,180

APPLICABILITY INDEX (continued)

Media	Contaminants	Treatment Type	Technology Vendor	Technology	Volume, Page Number
Ground water (continued)	VOCs (continued)	Physical/Chemical Treatment (continued)	ZENON Environmental Inc.	Cross-Flow Pervaporation System	V1,182
		Portable Gas Chromatographs	Bruker Analytical Systems, Inc.	Mobile Environmental Monitor	V3,20
			HNU Systems, Inc.	HNU GC 311D Portable Gas Chromatograph	V3,42
			Hewlitt-Packard Company	Portable Gas Analyzer	V3,40
			Photovac Monitoring Instruments	PE Photovac Voyager Portable Gas Chromatograph	V3,56
			Sentex Sensing Technology, inc.	Scentograph Plus II Portable Gas Chromatograph	V3,60
			SRI Instruments	Compact Gas Chromatograph	V3,66
			U.S. EPA	Field Analytical Screening Program - PCB Method	V3,78
		Solidification/ Stabilization	Wheelabrator Clean Air Systems, Inc.	PO*WW*ER™ Technology	V1,178
		Spectrometers	Graseby Ionics, Ltd., and PCP, Inc.	Ion Mobility Spectrometry	V3,36
		Test Kits	Hanby Environmental Laboratory Procedure, Inc.	Test Kits for Organic Contaminants in Soil and Water	V3,38
			Strategic Diagnostic, Inc. Corp.	RaPID Assay®	V3,72
		Thermal Destruction	Texaco Inc.	Texaco Gasification Process	V1,162
	Other	Physical/ Chemical Treatment	North American Technologies Group, Inc.	Oleophilic Amine-Coated Ceramic Chip	V1,132
			RECRA Environmental, Inc.	Alternating Electrocoagulation Technology	V2,92
Leachate	Aromatic VOCs	Biological Degradation	Biotrol®	Biological Aqueous Treatment System	V1,38
			Electrokinetics, Inc.	In Situ Bioremediation by Electrokinetic Injection	V2,120
			ZENON Environmental Inc.	ZenoGem™ Process	V1,184
		Physical/ Chemical Thermal Desorption	NOVATERRA, Inc.	In Situ Soil Treatments (Steam/Air Stripping)	V1,134
			Rochem Separation Systems, Inc.	Rochem Disc Tube™ Module System	V1,142
		Physical/ Chemical Treatment	CF Systems, Corp.	Liquified Gas Solvent Extraction (LG-SX) Technology	V1,48
			High Voltage Environmental Applications, Inc.	High Energy Electron Beam Irradiation	V2,54
			High Voltage Environmental Applications, Inc.	High Energy Electron Irradiation	V1,94

APPLICABILITY INDEX (continued)

Media	Contaminants	Treatment Type	Technology Vendor	Technology	Volume, Page Number
Leachate (continued)	Aromatic VOCs (continued)	Physical/ Chemical Treatment (continued)	Magnum Water Technology	CA-OX® Process	V1,108
			Matrix Photocatalytic Inc.	Photocatalytic Water Treatment	V1,110
			Pulse Sciences, Inc.	X-ray Treatment of Aqueous Solutions	V2,90
			SBP Technologies, Inc.	Membrane Filtration and Bioremediation	V1,144
			ZENON Environmental Inc.	Cross-Flow Pervaporation System	V1,182
		Portable Gas Chromatographs	Analytical and Remedial Technology, inc.	Automated Sampling and Analytical Platform	V3,14
			Bruker Analytical Systems, Inc.	Mobile Environmental Monitor	V3,20
			HNU Systems, Inc.	HNU GC 311D Portable Gas Chromatograph	V3,42
			Sentex Sensing Technology, Inc.	Scentograph Plus II Portable Gas Chromatograph	V3,60
			SRI Instruments	Compact Gas Chromatograph	V3,66
			U.S. EPA	Field Analytical Screening Program - PCB Method	V3,78
		Solidification/ Stabilization	Wheelabrator Clean Air Systems, Inc.	PO*WW*ER™ Technology	V1,178
		Spectrometers	Graseby Ionics, Ltd., and PCP, Inc.	Ion Mobility Spectrometry	V3,36
		Test Kits	Hanby Environmental Laboratory procedure, inc.	Test Kits for Organic Contaminants in Soil and Water	V3,38
	Cyanide	Biological Degradation	Pintail Systems, Inc.	Spent Ore Bioremediation process	V1,214
	Dioxins	Physical/ Chemical Thermal Desorption	ELI Eco Logic Inc.	Gas-Phase Chemical Reduction Process	V1,68
		Physical/ Chemical Treatment	CF Systems Corp.	Liquified Gas Solvent Extraction (LG-SX) Technology	V1,48
			High Voltage Environmental Applications, Inc.	High-Energy Electron Irradiation	V1,94
			Matrix Photocatalytic Inc.	Photocatalytic Water Treatment	V1,110
			SBP Technologies, Inc.	Membrane Filtration and Bioremediation	V1,144
		Portable Gas Chromatographs	Bruker Analytical Systems, inc.	Mobile Environmental Monitor	V3,20
		Solidification/ Stabilization	Wheelabrator Clean Air Systems, Inc.	PO*WW*ER™ Technology	V1,178
		Spectrometers	Graseby Ionics, Ltd., and PCP, Inc.	Ion Mobility Spectrometry	V3,36
		Test Kits	Strategic Diagnostic, Inc. Corp.	RaPID Assay®	V3,72
		Thermal Destruction	BWX Technologies, Inc.	Cyclone Furnace	V1,44

APPLICABILITY INDEX (continued)

Media	Contaminants	Treatment Type	Technology Vendor	Technology	Volume, Page Number
Leachate (continued)	Explosives	Physical/ Chemical Thermal Desorption	New Jersey Institute of Technology	GHEA Associates Process	V2,86
		Physical/ Chemical Treatment	U.S. Filter/WTS Ultrox	Ultraviolet Radiation and Oxidation	V1,168
	Furans	Physical/ Chemical Thermal Desorption	ELI Eco Logic Inc.	Gas-Phase Chemical Reduction Process	V1,68
		Physical/ Chemical Treatment	CF Systems Corp.	Liquified Gas Solvent Extraction (LG-SX) Technology	V1,48
			High Voltage Environmental Applications, Inc.	High-Energy Electron Irradiation	V1,94
			Matrix Photocatalytic Inc.	Photocatalytic Water Treatment	V1,110
			SBP Technologies, Inc.	Membrane Filtration and Bioremediation	V1,144
		Portable Gas Chromatographs	Bruker Analytical Systems, inc.	Mobile Environmental Monitor	V3,20
		Solidification/ Stabilization	Wheelabrator Clean Air Systems, Inc.	PO*WW*ER™ Technology	V1,178
		Spectrometers	Graseby Ionics, Ltd., and PCP, Inc.	Ion Mobility Spectrometry	V3,36
		Test Kits	Strategic Diagnostic, Inc. Corp.	RaPID Assay®	V3,72
		Thermal Destruction	BWX Technologies, Inc.	Cyclone Furnace	V1,44
	Halogenated VOCs	Biological Degradation	Biotrol®	Methanotrophic Bioreactor System	V2,28
			ZENON Environmental Inc.	ZenoGem™ Process	V1,184
		Physical/ Chemical Thermal Desorption	New Jersey Institute of Technology	GHEA Associates process	V2,86
			NOVATERRA, Inc.	In-Situ Soil Treatments (Steam/Sir Stripping)	V1,134
		Physical/ Chemical Treatment	CF Systems Corp.	Liquified Gas Solvent Extraction (LG-SX) Technology	V1,48
			EnviroMetal Technologies Inc.	In Situ and Ex Situ Metal Enhanced Abiotic Degradation of Dissolved Halogenated Organic Compounds in Groundwater	V1,72
			High Voltage Environmental Applications, Inc.	High Energy Electron Beam Irradiation	V2,54
			High Voltage Environmental Applications, Inc.	High Energy Electron Irradiation	V1,94
			Magnum Water Technology	CAV-OX® Process	V1,108
			Matrix Photocatalytic Inc.	Photocatalytic Water Treatment	V1,110
			Pulse Sciences, Inc.	X-ray Treatment of Aqueous Solutions	V2,90

APPLICABILITY INDEX (continued)

Media	Contaminants	Treatment Type	Technology Vendor	Technology	Volume, Page Number
Leachate (continued)	Halogenated VOCs (continued)	Physical/ Chemical Treatment (continued)	SBP Technologies, Inc.	Membrane Filtration and Bioremediation	V1,144
			U.S. Filter/WTS Ultrox	Ultraviolet Radiation and Oxidation	V1,168
			UV Technologies, Inc.	PhotoCAT™ Process	V2,112
			Roy F. Weston, Inc.	Ambersorb® 563 Adsorbent	V2,116
			ZENON Environmental Inc.	Cross-Flow Pervaporation System	V1,182
		Portable Gas Chromatographs	Analytical and Remedial Technology, Inc.	Automated Sampling and Analytical Platform	V3,14
			Bruker Analytical Systems, Inc.	Mobile Environmental Monitor	V3,20
			Sentex Sensing Technology, Inc.	Scentograph plus II Portable Gas Chromatograph	V3,60
			SRI Instruments	Compact Gas Chromatograph	V3,66
			U.S. EPA	Field Analytical Screening Program - PCB Method	V3,78
		Solidification/ Stabilization	Wheelabrator Clean Air Systems, inc.	PO*WW*ER™ Technology	V1,178
		Spectrometers	Graseby Ionics, Ltd., and PCP, Inc.	Ion Mobility Spectrometry	V3,36
		Test Kits	Strategic Diagnostic, Inc. Corp.	RaPID Assay®	V3,72
		Thermal Destruction	Energy and Environmental Research Corp.	Hybrid Fluidized Bed System	V2,42
	Herbicides	Biological Degradation	Biotrol®	Biological Aqueous Treatment System	V1,38
			Electrokinetics, Inc.	In Situ Bioremediation by Electrokinetic Injection	V2,120
			ZENON Environmental Inc.	ZenoGem™ Process	V1,184
		Physical/ Chemical Thermal Desorption	ELI Eco Logic Inc.	Gas-Phase Chemical Reduction Process	V1,68
		Physical/ Chemical Treatment	CF Systems Corp.	Liquified Gas Solvent Extraction (LG-SX) Technology	V1,48
			High Voltage Environmental Applications, Inc.	High-Energy Electron Irradiation	V1,94
			Magnum Water Technology	CAV-OX® Process	V1,108
			Matrix Photocatalytic Inc.	Photocatalytic Water Treatment	V1,110
			SBP Technologies, Inc.	Membrane Filtration and Bioremediation	V1,144
		Portable Gas Chromatographs	Bruker Analytical Systems, Inc.	Mobile Environmental Monitor	V3,20
		Solidification/ Stabilization	Wheelabrator Clean Air Systems, inc.	PO*WW*ER™ Technology	V1,178
		Spectrometers	Graseby Ionics, Ltd., and PCP, Inc.	Ion Mobility Spectrometry	V3,36

APPLICABILITY INDEX (continued)

Media	Contaminants	Treatment Type	Technology Vendor	Technology	Volume, Page Number
Leachate (continued)	Herbicides (continued)	Test Kits	Strategic Diagnostic, Inc. Corp.	RaPID Assay®	V3,72
		Thermal Destruction	BWX Technologies, Inc.	Cyclone Furnace	V1,44
	Metals	Biological Degradation	Colorado Dept. Of Public Health and Environment	Constructed Wetlands-Based Treatment	V1,54
			Pintail Systems, Inc.	Biomineralization of Metals	V2,130
			Pintail Systems, Inc.	Spent ore Bioremediation Process	V1,214
		Field Portable X-ray Fluorescence	Metorex, Inc.	Field Portable X-ray Fluorescence Analysis	V3,48
		Physical/ Chemical Radioactive Waste Treatment	Filter Flow Technology, Inc.	Colloid Polishing Filter Method	V1,76
		Physical/ Chemical Thermal Desorption	New Jersey Institute of Technology	GHEA Associates Process	V2,86
			Rochem Separation Systems, Inc.	Rochem Disc Tube™ Module System	V1,142
		Physical/ Chemical Treatment	Atomic Energy of Canada, Limited	Chemical Treatment and Ultrafiltration	V2,22
			Atomic Energy of Canada, Limited	Ultrasonic-Aided Leachate Treatment	V2,24
			E.I. DuPont de Nemours and Co., and Oberlin Filter Co.	Membrane Microfiltration	V1,60
			Dynaphore, Inc.	FORAGER® Sponge	V1,62
			EPOC Water, Inc.	Precipitation, Microfiltration, and Sludge Dewatering	V1,74
			Cure International, Inc.	CURE® Electrocoagulation Wastewater Treatment System	V1,58
			Lewis Environmental Services, Inc./ Hickson Corp.	Chromated Copper Arsenate Soil Leaching Process	V2,76
			Matrix Photocatalytic Inc.	Photocatalytic Water Treatment	V1,110
			Morrison Knudsen Corp./Spetstamponazhgeologia Enterprises/ STG Technologies	Clay-Base Grouting Technology	V1,114
			RECRA Environmental, Inc.	Alternating Current Electrocoagulation Technology	V2,92
			Selentec Environmental Technologies, Inc.	Selentec MAG*SEP Technology	V1,226
			U. of Washington	Adsorption Filtration	V2,110
		Portable Gas Chromatographs	HNU Systems, Inc.	HNU GC 311D Portable Gas Chromatograph	V3,42
		Solidification/ Stabilization	Wheelabrator Clean Air System, Inc.	PO*WW*ER™ Technology	V1,178
		Thermal Destruction	BWX Technologies, Inc.	Cyclone Furnace	V1,44

APPLICABILITY INDEX (continued)

Media	Contaminants	Treatment Type	Technology Vendor	Technology	Volume, Page Number
Leachate (continued)	Metals (continued)	Thermal Destruction (continued)	Energy and Environmental Research Corp.	Hybrid Fluidized Bed System	V2,42
	PAHs	Physical/ Chemical Treatment	SBP Technologies, Inc.	Membrane Filtration and Bioremediation	V1,144
		Portable Gas Chromatographs	Bruker Analytical Systems, Inc.	Mobile Environmental Monitor	V3,20
			SRI Instruments	Compact Gas Chromatograph	V3,66
	PCBs	Biological Degradation	ZENON Environmental Inc.	ZenoGem™ Process	V1,184
		Field Portable X-ray Fluorescence	Metorex, Inc.	Field Portable X-ray Fluorescence Analysis	V3,48
		Physical/ Chemical Thermal Desorption	ELI Eco Logic Inc.	Gas-Phase Chemical Reduction Process	V1,68
		Physical/ Chemical Treatment	Calgon Carbon Oxidation Technologies	perox-pure™ Chemical Oxidation Technology	V1,46
			CF Systems Corp.	Liquified Gas Solvent Extraction (LG-SX) Technology	V1,48
			High Voltage Environmental Applications, Inc.	High-Energy Electron Beam Irradiation	V2,54
			High Voltage Environmental Applications, Inc.	High-Energy Electron Irradiation	V1,94
			Magnum Water Technology	CAV-OX® Process	V1,108
			Matrix Photocatalytic Inc.	Photocatalytic Water Treatment	V1,110
			Morrison Knudsen Corp./Spetstamponazhgeologia Enterprises/ STG Technologies	Clay-Base Grouting Technology	V1,114
			SBP Technologies, Inc.	Membrane Filtration and Bioremediation	V1,144
			U.S. Filter/WTS Ultrox	Ultraviolet Radiation and Oxidation	V1,168
		Portable Gas Chromatographs	Bruker Analytical Systems, inc.	Mobile Environmental Monitor	V3,20
			HNU Systems, Inc.	HNU GC 311D Portable Gas Chromatograph	V3,42
			Sentex Sensing Technology, Inc.	Scentograph Plus II Portable Gas Chromatograph	V3,60
			SRI Instruments	Compact Gas Chromatograph	V3,66
			U.S. EPA	Field Analytical Screening Program - PCB Method	V3,78
		Solidification/ Stabilization	Wheelabrator Clean Air Systems, Inc.	PO*WW*ER™ Technology	V1,178
		Spectrometers	Graseby Ionics, Ltd., and PCP, Inc.	Ion Mobility Spectrometry	V3,36
		Test Kits	Strategic Diagnostic, Inc.	Ensys Penta Test Systems	V3,68

APPLICABILITY INDEX (continued)

Media	Contaminants	Treatment Type	Technology Vendor	Technology	Volume, Page Number
Leachate (continued)	PCBs (continued)	Test Kits (continued)	Hanby Environmental Laboratory Procedure, Inc.	Test Kits for Organic Contaminants in Soil and Water	V3,38
			Energy and Environmental Research Corp.	Hybrid Fluidized Bed System	V2,42
	PCP	Physical/ Chemical Treatment	SBP Technologies, Inc.	Membrane Filtration and Bioremediation	V1,144
			U.S. Filter/WTS Ultrox	Ultraviolet Radiation and Oxidation	V1,168
		Test Kits	Strategic Diagnostic, Inc.	Ensys Penta Test System	V3,68
			Strategic Diagnostic, Inc. Corp.	RaPID Assay®	V3,72
	Pesticides	Biological Degradation	Biotrol®	Biological Aqueous Treatment System	V1,38
			Electrokinetics, Inc.	In Situ Bioremediation by Electrokinetic Injection	V2,120
			ZENON Environmental Inc.	ZenoGem™ Process	V1,184
		Physical/ Chemical Thermal Desorption	ELI Eco Logic Inc.	Gas-Phase Chemical Reduction Process	V1,68
		Physical/ Chemical Treatment	Calgon Carbon Oxidation Technologies	perox-pure™ Chemical Oxidation Technology	V1,46
			CF Systems Corp.	Liquified Gas Solvent Extraction (LG-SX) Technology	V1,48
			High Voltage Environmental Applications, Inc.	High-Energy Electron Beam Irradiation	V2,54
			High Voltage Environmental Applications, Inc.	High-Energy Electron Irradiation	V1,94
			Magnum Water Technology	CAV-OX® Process	V1,108
			Matrix Photocatalytic Inc.	Photocatalytic Water Treatment	V1,110
			Morrison Knudsen Corp./Spetstamponazhgeologia Enterprises/ STG Technologies	Clay-Base Grouting Technology	V1,114
			SBP Technologies, Inc.	Membrane Filtration and Bioremediation	V1,144
			U.S. Filter/WTS Ultrox	Ultraviolet Radiation and Oxidation	V1,168
		Portable Gas Chromatographs	Bruker Analytical Systems, Inc.	Mobile Environmental Monitor	V3,20
			Sentex Sensing Technology, Inc.	Scentograph Plus II Portable Gas Chromatograph	V3,60
			SRI Instruments	Compact Gas Chromatograph	V3,66
			U.S. EPA	Field Analytical Screening Program - PCB Method	V3,78

APPLICABILITY INDEX (continued)

Media	Contaminants	Treatment Type	Technology Vendor	Technology	Volume, Page Number
Leachate (continued)	Pesticides (continued)	Solidification/ Stabilization	Wheelabrator Clean Air Systems, Inc.	PO*WW*ER Technology	V1,178
		Spectrometers	Graseby Ionics, Ltd., and PCP, Inc.	Ion Mobility Spectrometry	V3,36
		Test Kits	Strategic Diagnostic, Inc.	Ensys Penta Test System	V3,68
			Hanby Environmental Laboratory Procedure, inc.	Test Kits for Organic Contaminants in Soil and Water	V3,38
			Strategic Diagnostic, Inc. Corp.	RaPID Assay®	V3,72
		Thermal Destruction	BWX Technologies, Inc.	Cyclone Furnace	V1,44
			Energy and Environmental Research Corp.	Hybrid Fluidized Bed System	V2,40
	Petroleum Hydrocarbons	Physical/ Chemical Thermal Desorption	New Jersey Institute of Technology	GHEA Associates Process	V2,86
		Physical/ Chemical Treatments	Calgon Carbon Oxidation Technologies	perox-pure™ Chemical Oxidation Technology	V1,46
			SBP Technologies, Inc.	Membrane Filtration and Bioremediation	V1,144
		Portable Gas Chromatographs	SRI Instruments	Compact Gas Chromatograph	V3,66
	Radionuclides	Physical/ Chemical Radioactive Waste Treatment	Filter Flow Technology, Inc.	Colloid Polishing Filter Method	V1,76
		Physical/ Chemical Treatment	Atomic Energy of Canada, Limited	Chemical Treatment and Ultrafiltration	V2,22
			Atomic Energy of Canada, Limited	Ultrasonic-Aided Leachate Treatment and Ultrafiltration	V2,24
			Selentec Environmental Technologies, Inc.	Selentec MAG*SEP Technology	V1,226
		Thermal Destruction	BWX Technologies, Inc.	Cyclone Furnace	V1,44
	SVOCs	Biological Degradation	Biotrol®	Biological Aqueous Treatment System	V1,38
			ZENON Environmental Inc.	ZenoGem™ Process	V1,184
		Physical/ Chemical Thermal Desorption	ELI Eco Logic Inc.	Gas-Phase Chemical Reduction Process	V1,68
			New Jersey Institute of Technology	GHEA Associates Process	V2,86
			NOVATERRA, Inc.	In Situ Soil Treatments (Steam/ Air Stripping)	V1,134
		Physical/ Chemical Treatment	Calgon Carbon Oxidation Technologies	perox-pure™ Chemical Oxidation Technology	V1,46
			CF Systems Corp.	Liquified Gas Solvent Extraction (LG-SX) Technology	V1,48
			High Voltage Environmental Applications, Inc.	High-Energy Electron Beam Irradiation	V2,54

APPLICABILITY INDEX (continued)

Media	Contaminants	Treatment Type	Technology Vendor	Technology	Volume, Page Number
Leachate (continued)	SVOCs (continued)	Physical/Chemical Treatment (continued)	High Voltage Environmental Applications, Inc.	High-Energy Electron Irradiation	V1,94
			Pulse Sciences, Inc.	X-ray Treatment of Aqueous Solutions	V2,90
			SBP Technologies, Inc.	Membrane Filtration and Bioremediation	V1,144
		Portable Gas Chromatographs	Analytical and Remedial Technology, Inc.	Automated Sampling and Analytical Platform	V3,14
			Bruker Analytical Systems, inc.	Mobile Environmental Monitor	V3,20
			U.S. EPA	Field Analytical Screening Program - PCB Method	V3,78
		Solidification/ Stabilization	Wheelabrator Clean Air Systems, Inc.	PO*WW*ER™ Technology	V1,178
		Spectrometers	Graseby Ionics, Ltd., and PCP, Inc.	Ion Mobility Spectrometry	V3,36
		Test Kits	Strategic Diagnostic, Inc. Corp.	RaPID Assay®	V3,72
		Thermal Destruction	BWX Technologies, Inc.	Cyclone Furnace	V1,44
	VOCs	Biological Degradation	Biotrol®	Biological Aqueous Treatment System	V1,38
			Electrokinetics, Inc.	In Situ Bioremediation by Electrokinetic Injection	V2,120
			ZENON Environmental Inc.	ZenoGem™ Process	V1,184
		Physical/ Chemical Thermal Desorption	New Jersey Institute of Technology	GHEA Associates Process	V2,86
			NOVATERRA, Inc.	In Situ Soil Treatment (Steam/ Air Stripping)	V1,134
			Rochem Separation Systems, Inc.	Rochem Disc Tube™ Module System	V1,142
		Physical/ Chemical Treatment	Calgon Carbon Oxidation Technologies	perox-pure™ Chemical Oxidation Technology	V1,46
			CF Systems Corp.	Liquified Gas Solvent Extraction (LG-SX) Technology	V1,48
			EnviroMetal Technologies Inc.	In Situ and Ex Situ Metal Enhanced Abiotic Degradation of Dissolved Halogenated Organic Compounds in Groundwater	V1,72
			High Voltage Environmental Applications, Inc.	High-Energy Electron Irradiation	V1,94
			Matrix Photocatalytic Inc.	Photocatalytic Water Treatment	V1,110
			Morrison Knudsen Corp./Spetstamponazhgeologia Enterprises/ STG Technologies	Clay-Base Grouting Technology	V1,114

APPLICABILITY INDEX (continued)

Media	Contaminants	Treatment Type	Technology Vendor	Technology	Volume, Page Number
Leachate (continued)	VOCs (continued)	Physical/Chemical Treatment (continued)	Pulse Sciences, Inc.	X-ray Treatment of Aqueous Solutions	V2,90
			SBP Technologies, Inc.	Membrane Filtration and Bioremediation	V1,144
			U.S. Filter/WTS Ultrox	Ultraviolet Radiation and Oxidation	V1,168
			UV Technologies, Inc.	PhotoCAT™ Process	V2,112
			Roy F. Weston, Inc.	Ambersorb® 563 Adsorbent	V2,116
			ZENON Environmental, Inc.	Cross-Flow Pervaporation System	V1,184
		Portable Gas Chromatographs	Bruker Analytical Systems, Inc.	Mobile Environmental Monitor	V3,20
			HNU Systems, Inc.	HNU GC 311D Portable Gas Chromatograph	V3,42
			Sentex Sensing Technology, Inc.	Scentograph Plus II Portable Gas Chromatograph	V3,60
			SRI Instruments	Compact Gas Chromatograph	V3,66
			U.S. EPA	Field Analytical Screening Program - PCB Method	V3,78
		Solidification/ Stabilization	Wheelabrator Clean Air Systems, Inc.	PO*WW*ER™ Technology	V1,178
		Spectrometers	Graseby Ionics, Ltd., and PCP, Inc.	Ion Mobility Spectrometry	V3,36
		Test Kits	Hanby Environmental Laboratory Procedure, Inc.	Test Kits for Organic Contaminants in Soil and Water	V3,38
			Strategic Diagnostic, Inc. Corp.	RaPID Assay®	V3,72
		Thermal Destruction	Energy and Environmental Research Corp.	Hybrid Fluidized Bed System	V2,40
	Other	Physical/ Chemical Treatment	North American Technologies Group, Inc.	Oleophilic Amine-Coated Ceramic Chip	V1,132
			RECRA Environmental, inc.	Alternating Current Electrocoagulation Technology	V2,92
Liquid	Aromatic VOCs	Biological Degradation	Harding Lawson Associates	Two-Zone Plume Interception, In Situ Treatment Technology	V2,48
			Billings and Associates, Inc.	Subsurface Volatilization and Ventilation System (SVVS®)	V1,30
			Bio-Rem, Inc.	Augmented In Situ Subsurface Bioremediation Process	V1,34
			Biotrol®	Biological Aqueous Treatment System	V1,38
			Electrokinetics, Inc.	In Situ Bioremediation by Electrokinetic Injection	V2,120
			New York State Dept. Of Environmental Conservation/R.E. Wright Environmental, Inc.	In Situ Bioventing Treatment System	V1,130

APPLICABILITY INDEX (continued)

Media	Contaminants	Treatment Type	Technology Vendor	Technology	Volume, Page Number
Liquids (continued)	Aromatic VOCs (continued)	Biological Degradation (continued)	IT Corp.	Oxygen Microbubble In Situ Bioremediation	V2,126
			ZENON Environmental Inc.	ZenoGem™ Process	V1,184
		Materials Handling	National Risk Management Research Laboratory, The U. of Cincinnati, and FRX, Inc.	Hydraulic Fracturing	V1,124
		Physical/ Chemical Thermal Desorption	Hughes Environmental Systems, Inc.	Steam Enhanced Recovery Process	V1,100
			Rochem Separation Systems, Inc.	Rochem Disc Tube™ Module System	V1,142
			SoilTech ATP Systems, Inc.	Anaerobic Thermal Processor	V1,150
		Physical/ Chemical Treatment	ARS Technologies, Inc.	Pneumatic Fracturing Extraction™ and Catalytic Oxidation	V1,24
			CF Systems Corp.	Liquified Gas Solvent Extraction (LG-SX) Technology	V1,48
			High Voltage Environmental Applications, Inc.	High Energy Electron Beam Irradiation	V2,54
			High Voltage Environmental Applications, Inc.	High Energy Electron Irradiation	V1,94
			KSE, Inc.	Adsorption-Integrated-Reaction Process	V1,200/ V2,24
			Matrix Photocatalytic Inc.	Photocatalytic Water Treatment	V1,110
			Pulse Sciences, Inc.	X-ray Treatment of Aqueous Solutions	V2,90
			SBP Technologies, Inc.	Membrane Filtration and Bioremediation	V1,144
			Terra Vac, Inc.	In Situ and Ex Situ Vacuum Extraction	V1,160
			U. of Nebraska - Lincoln	Center Pivot Spray Irrigation System	V1,170
			Roy F. Weston, Inc./IEG Technologies	UVB - Vacuum Vaporizing Well	V1,176
			Xerox Corp.	2-PHASE™ EXTRACTION Process	V1,180
			ZENON Environmental Inc.	Cross-Flow Pervaporation System	V1,182
		Portable Gas Chromatographs	Analytical and Remedial Technology, Inc.	Automated Sampling and Analytical Platform	V3,14
			Bruker Analytical Systems, Inc.	Mobile Environmental Monitor	V3,20
			HNU Systems, Inc.	HNU GC 311D Portable Gas Chromatograph	V3,42
			Photovac Monitoring Instruments	PE Photovac Voyager Portable Gas Chromatograph	V3,56

APPLICABILITY INDEX (continued)

Media	Contaminants	Treatment Type	Technology Vendor	Technology	Volume, Page Number
Liquids (continued)	Aromatic VOCs (continued)	Portable Gas Chromatograph (continued)	Sentex Sensing Technology, Inc.	Scentograph Plus II Portable Gas Chromatograph	V3,60
			SRI Instruments	Compact Gas Chromatograph	V3,66
			U.S. EPA	Field Analytical Screening Program - PCB Method	V3,78
		Solidification/ Stabilization	Wheelabrator Clean Air Systems, Inc.	PO*WW*ER™ Technology	V1,178
		Spectrometers	Graseby Ionics, Ltd., and PCP, Inc.	Ion Mobility Spectrometry	V3,36
		Test Kits	Hanby Environmental Laboratory Procedure, Inc.	Test Kits for Organic Contaminants in Soil and Water	V3,38
		Thermal Destruction	Texaco Inc.	Texaco Gasification Process	V1,162
			U. of Dayton Research Institute	Photothermal Detoxification Unit	V2,106
	Cyanide	Biological Degradation	Pintail Systems, Inc.	Spent Ore Bioremediation Process	V1,214
	Diesel	Materials Handling	National Risk Management Research Laboratory, The U. of Cincinnati, and FRX, Inc.	Hydraulic Fracturing	V1,124
	Dioxins	Physical/ Chemical Thermal Desorption	ELI Eco Logic Inc.	Gas-Phase Chemical Reduction Process	V1,68
			SoilTech ATP Systems, Inc.	Anaerobic Thermal Processor	V1,150
		Physical/ Chemical Treatment	CF Systems Corp.	Liquified Gas Solvent Extraction (LG-SX) Technology	V1,48
			High Voltage Environmental Applications, Inc.	High Energy Electron Irradiation	V1,94
			Matrix Photocatalytic Inc.	Photocatalytic Water Treatment	V1,110
			SBP Technologies, Inc.	Membrane Filtration and Bioremediation	V1,144
		Portable Gas Chromatographs	Bruker Analytical Systems, Inc.	Mobile Environmental Monitor	V3,20
		Solidification/ Stabilization	Wheelabrator Clean Air Systems, Inc.	PO*WW*ER™ Technology	V1,178
		Spectrometers	Graseby Ionics, Ltd., and PCP, Inc.	Ion Mobility Spectrometry	V3,36
		Test Kits	Strategic Diagnostic, Inc. Corp.	RaPID Assay®	V3,72
		Thermal Destruction	BWX Technologies, Inc.	Cyclone Furnace	V1,44
			U. of Dayton Research Institute	Photothermal Detoxification Unit	V2,106
	Explosives	Physical/ Chemical Thermal Desorption	New Jersey Institute of Technology	GHEA Associates Process	V2,86
		Physical/ Chemical Treatment	U.S. Filter/WTS Ultrox	Ultraviolet Radiation and Oxidation	V1,168

APPLICABILITY INDEX (continued)

Media	Contaminants	Treatment Type	Technology Vendor	Technology	Volume, Page Number
Liquids (continued)	Furans	Physical/ Chemical Thermal Desorption	ELI Eco Logic Inc.	Gas-Phase Chemical Reduction Process	V1,68
			SoilTech ATP Systems, Inc.	Anaerobic Thermal Processor	V1,150
		Physical/ Chemical Treatment	CF Systems Corp.	Liquified Gas Solvent Extraction (LG-SX) Technology	V1,48
			High Voltage Environmental Applications, Inc.	High Energy Electron Irradiation	V1,94
			Matrix Photocatalytic Inc.	Photocatalytic Water Treatment	V1,110
			SBP Technologies, Inc.	Membrane Filtration and Bioremediation	V1,144
		Portable Gas Chromatographs	Bruker Analytical Systems, Inc.	Mobile Environmental Monitor	V3,20
		Solidification/ Stabilization	Wheelabrator Clean Air Systems, Inc.	PO*WW*ER™ Technology	V1,178
		Spectrometers	Graseby Ionics, Ltd., and PCP, Inc.	Ion Mobility Spectrometry	V3,36
		Test Kits	Strategic Diagnostic, Inc. Corp.	RaPID Assay®	V3,72
		Thermal Destruction	BWX Technologies, Inc.	Cyclone Furnace	V1,44
			U. of Dayton Research Institute	Photothermal Detoxification Unit	V2,106
	Gasoline	Materials Handling	National Risk Management Research Laboratory, The U. of Cincinnati, and FRX, Inc.	Hydraulic Fracturing	V1,124
	Halogenated VOCs	Biological Degradation	ABB Environmental Services, Inc.	Anaerobic-Aerobic Sequential Bioremediation of PCE	V2,50
			Harding Lawson Associates	Two-Zone Plume Interception, In Situ Treatment Technology	V2,48
			Bio-Rem, Inc.	Augmented In Situ Subsurface Bioremediation Process	V1,34
			Biotrol®	Methanotrophic Bioreactor System	V2,28
			New York State Dept. Of Environmental Conservation/R.E. Wright Environmental, Inc.	In Situ Bioventing Treatment System	V1,130
			IT Corp.	Oxygen Microbubble In Situ Bioremediation	V2,126
			U.S. Air Force	Phytoremediation of TCE-Contaminated Shallow Groundwater	V1,234
			ZENON Environmental Inc.	ZenoGem™ Process	V1,184

APPLICABILITY INDEX (continued)

Media	Contaminants	Treatment Type	Technology Vendor	Technology	Volume, Page Number
Liquids (continued)	Halogenated VOCs (continued)	Materials Handling	National Risk Management Research Laboratory, The U. of Cincinnati, and FRX, Inc.	Hydraulic Fracturing	V1,124
		Physical Chemical Treatment - Biological Degradation	Lasagna™ Public-Private Partnership	Lasagna™ In Situ Soil Remediation	V1,202
		Physical/ Chemical Thermal Desorption	Hughes Environmental Systems, Inc.	Steam Enhanced Recovery Process	V1,100
			KAI Technologies, Inc./Brown and Root Environmental	Radio Frequency Heating	V1,106
			New Jersey Institute of Technology	GHEA Associates Process	V2,86
			SoilTech ATP Systems, Inc.	Anaerobic Thermal Process	V1,150
		Physical/ Chemical Treatment	ARS Technologies, Inc.	Pneumatic Fracturing Extraction™ and Catalytic Oxidation	V1,24
			Arizona State U/Zentox Corp.	Photocatalytic Oxidation with Air Stripping	V2,18
			CF Systems Corp.	Liquified Gas Solvent Extraction (LG-SX) Technology	V1,48
			High Voltage Environmental Applications, Inc.	High Energy Electron Beam Irradiation	V2,54
			High Voltage Environmental Applications, Inc.	High Energy Electron Irradiation	V1,94
			KSE, Inc.	Adsorption-Integrated-Reaction Process	V1,200/ V2,24
			Matrix Photocatalytic Inc.	Photocatalytic Water Treatment	V1,110
			Pulse Sciences, Inc.	X-ray Treatment of Aqueous Solutions	V2,90
			SBP Technologies, Inc.	Membrane Filtration and Bioremediation	V1,144
			Terra Vac, Inc.	In Situ and Ex Situ Vacuum Extraction	V1,160
			U.S. Filter/WTS Ultrox	Ultraviolet Radiation and Oxidation	V1,168
			U. of Nebraska - Lincoln	Center Pivot Spray Irrigation System	V1,170
			UV Technologies, Inc.	PhotoCAT™ Process	V2,112
			Roy F. Weston, Inc./IEG Technologies	Ambersorb 563 Adsorbent	V2,116
			Roy F. Weston, Inc./IEG Technologies	UVB - Vacuum Vaporizing Well	V1,176
			Xerox Corp.	2-PHASE™ EXTRACTION Process	V1,180
			ZENON Environmental Inc.	Cross-Flow Pervaporation System	V1,182

APPLICABILITY INDEX (continued)

Media	Contaminants	Treatment Type	Technology Vendor	Technology	Volume, Page Number
Liquids (continued)	Halogenated VOCs (continued)	Portable Gas Chromatographs	Analytical and Remedial Technology, Inc.	Automated Sampling and Analytical Platform	V3,14
			Bruker Analytical Systems, Inc.	Mobile Environmental Monitor	V3,20
			Photovac Monitoring Instruments	PE Photovac Voyager Portable Gas Chromatograph	V3,56
			Sentex Sensing Technology, Inc.	Scentograph Plus II Portable Gas Chromatograph	V3,60
			SRI Instruments	Compact Gas Chromatograph	V3,66
			U.S. EPA	Field Analytical Screening Program - PCB Method	V3,78
		Solidification/ Stabilization	Wheelabrator Clean Air Systems, Inc.	PO*WW*ER™ Technology	V1,178
		Spectrometers	Graseby Ionics, Ltd., and PCP, Inc.	Ion Mobility Spectrometry	V3,36
		Test Kits	Strategic Diagnostic, Inc. Corp.	RaPID Assay®	V3,72
		Thermal Destruction	Texaco Inc.	Texaco Gasification Process	V1,162
			U. of Dayton Research Institute	Photothermal Detoxification Unit	V2,106
	Heavy Metals	Field Portable X-ray Fluorescence	HNU Systems, Inc.	HNU Source Excited Fluorescence Analyzer-Portable (SEFA-P) X-ray Fluorescence Analyzer	V3,44
	Herbicides	Biological Degradation	Biotrol®	Biological Aqueous Treatment System	V1,38
			Electrokinetics, Inc.	In Situ Bioremediation by Electrokinetic Injection	V2,120
			ZENON Environmental Inc.	ZenoGem™ Process	V1,184
		Physical Chemical Treatment - Biological Degradation	Lasagna™ Public - Private Partnership	Lasagna™ In Situ Soil Remediation	V1,202
		Physical/ Chemical Thermal Desorption	ELI Eco Logic Inc.	Gas-Phase Chemical Reduction Process	V1,68
			SoilTech ATP Systems, Inc.	Anaerobic Thermal Processor	V1,150
		Physical/ Chemical Treatment	CF Systems Corp.	Liquified Gas Solvent Extraction (LG-SX) Technology	V1,48
			High Voltage Environmental Applications, Inc.	High Energy Electron Irradiation	V1,94
			Matrix Photocatalytic Inc.	Photocatalytic Water Treatment	V1,110
			SBP Technologies, Inc.	Membrane Filtration and Bioremediation	V1,144
		Portable Gas Chromatographs	Bruker Analytical Systems, Inc.	Mobile Environmental Monitor	V3,20
		Solidification/ Stabilization	Wheelabrator Clean Air Systems, Inc.	PO*WW*ER™ Technology	V1,178

APPLICABILITY INDEX (continued)

Media	Contaminants	Treatment Type	Technology Vendor	Technology	Volume, Page Number
Liquids (continued)	Herbicides (continued)	Spectrometers	Graseby Ionics, Ltd., and PCP, Inc.	Ion Mobility Spectrometry	V3,36
		Test Kits	Strategic Diagnostic, Inc. Corp.	RaPID Assay®	V3,72
		Thermal Destruction	BWX Technologies, Inc.	Cyclone Furnace	V1,44
			U. of Dayton Research Institute	Photothermal Detoxification Unit	V2,106
	Inorganics	Field Portable X-ray Fluorescence	HNU Systems, Inc.	HNU Source Excited Fluorescence Analyzer-Portable (SEFA-P) X-ray Fluorescence Analyzer	V3,44
	Metals	Biological Degradation	Colorado Dept. of Public Health and Environment	Constructed Wetlands-Based Treatment	V1,54
			Pintail Systems, Inc.	Biomineralization of Metals	V2,130
			Pintail Systems, Inc.	Spent ore Bioremediation Process	V1,214
			Resource Management & Recovery	AlgaSORB© Biological Sorption	V2,96
		Field Portable X-ray Fluorescence	HNU Systems, Inc.	HNU Source Excited Fluorescence Analyzer-Portable (SEFA-P) X-ray Fluorescence Analyzer	V3,44
			Metorex, Inc.	Field Portable X-ray Fluorescence Analysis	V3,48
		Physical/ Chemical Treatment - Biological Degradation	Lasagna™ Public - Private Partnership	Lasagna™ In Situ Soil Remediation	V1,202
		Physical/ Chemical Radioactive Waste Treatment	Filter Flow Technology, Inc.	Colloid Polishing Filter Method	V1,76
		Physical/ Chemical Thermal Desorption	New Jersey Institute of Technology	GHEA Associates Process	V2,86
			Rochem Separation Systems, Inc.	Rochem Disc TUBE™ Module System	V1,142
		Physical/ Chemical Treatment	Atomic Energy of Canada, Limited	Chemical Treatment and Ultrafiltration	V2,22
			E.I. DuPont de Nemours and Co., and Oberlin Filter Co.	Membrane Microfiltration	V1,60
			Dynaphore, Inc.	FORAGER® Sponge	V1,62
			EPOC Water, Inc.	Precipitation, Microfiltration, and Sludge Dewatering	V1,74
			Cure International, Inc.	CURE® Electrocoagulation Wastewater Treatment System	V1,58
			Lewis Environmental Services, Inc./ Hickson Corp.	Chromated Copper Arsenate Soil Leaching Process	V2,76
			Matrix Photocatalytic Inc.	Photocatalytic Water Treatment	V1,110

APPLICABILITY INDEX (continued)

Media	Contaminants	Treatment Type	Technology Vendor	Technology	Volume, Page Number
Liquids (continued)	Metals (continued)	Physical/ Chemical Treatment (continued)	Morrison Knudsen Corp./Spetstamponazhgeologia Enterprises/STG Technologies	Clay-Base Grouting Technology	V1,114
			RECRA Environmental, Inc.	Alternating Current Electrocoagulation Technology	V2,92
			Selentec Environmental Technologies, Inc.	Selentec MAG*SEP Technology	V1,226
			U. of Washington	Adsorptive Filtration	V2,110
			U. of Wisconsin - Madison	Photoelectrocatalytic Degradation and Removal	V2,138
		Portable Gas Chromatographs	HUN Systems, Inc.	HNU GC 311D Portable Gas Chromatograph	V3,42
		Solidification/ Stabilization	Wheelabrator Clean Air Systems, Inc.	PO*WW*ER™ Technology	V1,178
		Thermal Destruction	BWX Technologies, Inc.	Cyclone Furnace	V1,44
	PAHs	Physical/ Chemical Treatment	SBP Technologies, Inc.	Membrane Filtration and Bioremediation	V1,144
		Portable Gas Chromatograph	Bruker Analytical Systems, Inc.	Mobile Environmental Monitor	V3,20
			SRI Instruments	Compact Gas Chromatograph	V3,66
	PCBs	Biological Degradation	ZENON Environmental Inc.	ZenoGem™ Process	V1,184
		Field Portable X-ray Fluorescence	Metorex, Inc.	Field portable X-ray Fluorescence Analysis	V3,48
		Physical/ Chemical Thermal Desorption	ELI Eco Logic Inc.	Gas-Phase Chemical Reduction Process	V1,68
			KAI Technologies, Inc./Brown and Root Environmental	Radio Frequency Heating	V1,106
			New Jersey Institute of Technology	GHEA Associates Process	V2,86
			SoilTech ATP Systems, Inc.	Anaerobic Thermal Processor	V1,150
		Physical/ Chemical Treatment	Calgon Carbon Oxidation Technologies	perox-pure™ Chemical Oxidation Technology	V1,46
			CF Systems Corp.	Liquified Gas Solvent Extraction (LG-SX) Technology	V1,48
			High Voltage Environmental Applications, Inc.	High Energy Electron Beam Irradiation	V2,54
			High Voltage Environmental Applications, Inc.	High Energy Beam Irradiation	V1,94
			Matrix Photocatalytic Inc.	Photocatalytic Water Treatment	V1,110
			Morrison Knudsen Corp./Spetstamponazhgeologia Enterprises/STG Technologies	Clay-Base Grouting Technology	V1,114

APPLICABILITY INDEX (continued)

Media	Contaminants	Treatment Type	Technology Vendor	Technology	Volume, Page Number
Liquids (continued)	PCBs (continued)	Physical/Chemical Treatment (continued)	SBP Technologies, Inc.	Membrane Filtration and Bioremediation	V1,144
			U.S. Filter/WTS Ultrox	Ultraviolet Radiation and Oxidations	V1,168
			U. of Wisconsin - Madison	Photoelectrocatalytic Degradation and Removal	V2,138
		Portable Gas Chromatographs	Bruker Analytical Systems, Inc.	Mobile Environmental Monitor	V3,20
			HNU Systems, Inc.	HNU GC 311D Portable Gas Chromatograph	V3,42
			Sentex Sensing Technology, inc.	Scentograph Plus II Portable Gas Chromatograph	V3,60
			SRI Instruments	Compact Gas Chromatograph	V3,66
			U.S. EPA	Field Analytical Screening Program - PCB Method	V3,78
		Solidification/ Stabilization	Wheelabrator Clean Air Systems, Inc.	PO*WW*ER™ Technology	V1,178
		Spectrometers	Graseby Ionics, Ltd., and PCP, Inc.	Ion Mobility Spectrometry	V3,36
		Test Kits	Strategic Diagnostic, Inc.	Ensys Penta Test System	V3,68
			Hanby Environmental Laboratory Procedures, Inc.	Test Kits for Organic Contaminants in Soil and Water	V3,38
		Thermal Destruction	BWX Technologies, Inc.	Cyclone Furnace	V1,44
			U. of Dayton Research Institute	Photothermal Detoxification Unit	V2,106
	PCP	Physical/ Chemical Treatment	SBP Technologies, Inc.	Membrane Filtration and Bioremediation	V1,144
			U.S. Filter/WTS Ultrox	Ultraviolet Radiation and Oxidation	V1,168
		Test Kits	Strategic Diagnostic, Inc.	Ensys Penta Test System	V3,68
			Strategic Diagnostic, Inc. Corp.	RaPID Assay®	V3,72
	Pesticides	Biological Degradation	Biotrol®	Biological Aqueous Treatment System	V1,38
			Electrokinetics, Inc.	In Situ Bioremediation by Electrokinetic Injections	V2,120
			ZENON Environmental Inc.	ZenoGem™ Process	V1,184
		Physical/ Chemical Thermal Desorption	ELI Eco Logic Inc.	Gas-Phase Chemical Reduction Process	V1,68
			KAI Technologies, Inc./Brown and Root Environmental	Radio Frequency heating	V1,106
			SoilTech ATP Systems, Inc.	Anaerobic Thermal Process	V1,150
		Physical/ Chemical Treatment	Calgon Carbon Oxidation Technologies	perox-pure™ Chemical Oxidation Technology	V1,46
			CF Systems Corp.	Liquified Gas Solvent Extraction (LG-SX) Technology	V1,48

APPLICABILITY INDEX (continued)

Media	Contaminants	Treatment Type	Technology Vendor	Technology	Volume, Page Number
Liquids (continued)	Pesticides (continued)	Physical/ Chemical Treatment (continued)	High Voltage Environmental Applications, Inc.	High-Energy Electron Beam Irradiation	V2,54
			High Voltage Environmental Applications, Inc.	High-Energy Electron Irradiation	V1,94
			Matrix Photocatalytic Inc.	Photocatalytic Water Treatment	V1,110
			Morrison Knudsen Corp./Spetstamponazhgeologia Enterprises/STG Technologies	Clay-Base Grouting Technology	V1,114
			SBP Technologies, Inc.	Membrane Filtration and Bioremediation	V1,144
			U.S. Filter/WTS Ultrox	Ultraviolet Radiation and Oxidation	V1,168
			U. of Wisconsin - Madison	Photoelectrocatalytic Degradation and Removal	V2,138
		Portable Gas Chromatographs	Bruker Analytical Systems, Inc.	Mobile Environmental Monitor	V3,20
			Sentex Sensing Technology, Inc.	Scentograph Plus II Portable Gas Chromatograph	V3,60
			SRI Instruments	Compact Gas Chromatograph	V3,66
			U.S. EPA	Field Analytical Screening Program - PCB Method	V3,78
		Solidification/ Stabilization	Wheelabrator Clean Air Systems, Inc.	PO*WW*ER™ Technology	V1,178
		Spectrometers	Graseby Ionics, Ltd., and PCP, Inc.	Ion Mobility Spectrometry	V3,36
		Test Kits	Strategic Diagnostic, Inc.	Ensys Penta Test System	V3,68
			Hanby Environmental Laboratory Procedure, Inc.	Test Kits for Organic Contaminants in Soil and Water	V3,38
			Strategic Diagnostic, Inc. Corp.	RaPID Assay®	V3,72
		Thermal Destruction	BWX Technologies, Inc.	Cyclone Furnace	V1,44
			U. of Dayton Research Institute	Photothermal Detoxification Unit	V2,106
	Petroleum Hydrocarbons	Materials Handling	National Risk Management Research Laboratory, The U. of Cincinnati, and FRX, Inc.	Hydraulic Fracturing	V1,124
		Physical/ Chemical Thermal Desorption	New Jersey Institute of Technology	GHEA Associates Process	V2,86
		Physical/ Chemical Treatment	Calgon Carbon Oxidation Technologies	perox-pure™ Chemical Oxidation Technology	V1,46
			SBP Technologies, Inc.	Membrane Filtration and Bioremediation	V1,144

APPLICABILITY INDEX (continued)

Media	Contaminants	Treatment Type	Technology Vendor	Technology	Volume, Page Number
Liquids (continued)	Petroleum Hydrocarbons (continued)	Portable Gas Chromatographs	SRI Instruments	Compact Gas Chromatograph	V3,66
	Radionuclides	Physical/ Chemical Radioactive Waste Treatment	Filter Flow Technology, Inc.	Colloid Polishing Filter Method	V1,76
		Physical/ Chemical Treatment	Atomic Energy of Canada, Limited	Chemical Treatment and Ultrafiltration	V2,22
			Selentec Environmental Technologies, Inc.	Selentec MAG*SEP Technology	V1,226
		Thermal Destruction	BWX Technologies, Inc.	Cyclone Furnace	V1,44
	SVOCs	Biological Degradation	Harding Lawson Associates	Two-Zone, Plume Interception, In Situ Treatment Technology	V2,48
			Biotrol®	Biological Aqueous Treatment System	V1,38
			New York State Dept. Of Environmental Conservation/R.E. Wright Environmental Inc.	In Situ Bioventing Treatment System	V1,130
			IT Corp.	Oxygen Microbubble In Situ Bioremediation	V2,126
			ZENON Environmental Inc.	ZenoGem™ Process	V1,184
		Physical/ Chemical Thermal Desorption	ELI Eco Logic Inc.	Gas-Phase Chemical Reduction Process	V1,68
			KAI Technologies, Inc./Brown and Root Environmental	Radio Frequency Heating	V1,106
			New Jersey Institute of Technology	GHEA Associates Process	V2,86
			SoilTech ATP Systems, Inc.	Anaerobic Thermal Processor	V1,150
		Physical/ Chemical Treatment	ARS Technologies, Inc.	Pneumatic Fracturing Extraction™ and Catalytic Oxidation	V1,24
			Calgon Carbon Oxidation Technologies	perox-pure™ Chemical Oxidation Technology	V1,46
			CF Systems Corp.	Liquified Gas Solvent Extraction (LG-SX) Technology	V1,48
			High Voltage Environmental Applications, Inc.	High-Energy Electron Beam Irradiation	V2,54
			High Voltage Environmental Applications, Inc.	High-Energy Electron Irradiation	V1,94
			Pulse Sciences, Inc.	X-ray Treatment of Aqueous Solutions	V2,90
			SBP Technologies, Inc.	Membrane Filtration and Bioremediation	V1,144

APPLICABILITY INDEX (continued)

Media	Contaminants	Treatment Type	Technology Vendor	Technology	Volume, Page Number
Liquids (continue)	SVOCs (continued)	Physical/Chemical Treatment (continued)	Terra Vac, Inc.	In Situ and Ex Situ Vacuum Extraction	V1,160
			U. of Wisconsin - Madison	Photoelectrocatalytic Degradation and Removal	V2,138
			Roy F. Weston, Inc./IEG Technologies	UVB - Vacuum Vaporizing Well	V1,176
			Xerox Corp.	2-PHASE™ EXTRACTION Process	V1,180
		Portable Gas Chromatographs	Analytical and Remedial Technology, Inc.	Automated Sampling and Analytical Platform	V3,14
			Bruker Analytical Systems, Inc.	Mobile Environmental Monitor	V3,20
			U.S. EPA	Field Analytical Screening Program - PCB Method	V3,78
		Solidification/ Stabilization	Wheelabrator Clean Air Systems, Inc.	PO*WW*ER™ Technology	V1,178
		Spectrometers	Graseby Ionics, Ltd., and PCP, Inc.	Ion Mobility Spectrometry	V3,36
		Test Kits	Strategic Diagnostic, Inc. Corp.	RaPID Assay®	V3,72
		Thermal Destruction	BWX Technologies, Inc.	Cyclone Furnace	V1,44
			Texaco Inc.	Texaco Gasification process	V1,162
		Other	U. of Dayton Research Institute	Photothermal Detoxification Unit	V2,106
			Berkeley Environmental Restoration Center	In Situ Steam Enhanced Extraction Process	V1,28
	VOCs	Biological Degradation	Billings and Associates, Inc.	Subsurface Volatilization and Ventilation System (SVVS®)	V1,30
			Bio-Rem, Inc.	Augmented In Situ Subsurface Bioremediation Process	V1,34
			Biotrol®	Biological Aqueous Treatment System	V1,38
			Electrokinetics, Inc.	In Situ Bioremediation by Electrokinetic Injection	V2,120
			New York State Dept. of Environmental Conservation/R.E. Wright Environmental, Inc.	In Situ Bioventing Treatment System	V1,130
			IT Corp.	Oxygen Microbubble In Situ Bioremediation	V2,126
			U.S. Air Force	Phytoremediation of TCE-Contaminated Shallow Groundwater	V1,234
			ZENON Environmental inc.	ZenoGem™ Process	V1,184
		Materials Handling	National Risk Management Research Laboratory, The U. of Cincinnati, and FRX, Inc.	Hydraulic Fracturing	V1,124

APPLICABILITY INDEX (continued)

Media	Contaminants	Treatment Type	Technology Vendor	Technology	Volume, Page Number
Liquids (continued)	VOCs (continued)	Physical/ Chemical Thermal Desorption	Hughes Environmental Systems, Inc.	Steam Enhanced Recovery Process	V1,100
			KAI Technologies, Inc./Brown and Root Environmental	Radio Frequency Heating	V1,106
			New Jersey Institute of Technology	GHEA Associates Process	V2,86
			Rochem Separation Systems, Inc.	Rochem Disc Tube™ Module System	V1,142
			SoilTech ATP Systems, Inc.	Anaerobic Thermal Processor	V1,150
		Physical/ Chemical Treatment	ARS Technologies, Inc.	Pneumatic Fracturing Extraction™ and Catalytic Oxidation	V1,24
			Arizona State U./ Zentox Corp.	Photocatalytic Oxidation with Air Stripping	V2,18
			Calgon Carbon Oxidation Technologies	perox-pure™ Chemical Oxidation Technology	V1,46
			CF Systems Corp.	Liquified Gas Solvent Extraction (LG-SX) Technology	V1,48
			Radian International LCC	Integrated Vapor Extraction and Steam Vacuum Stripping and Soil Vapor Extraction/Reinjection	V1,138
			High Voltage Environmental Applications, Inc.	High Energy Electron Irradiation	V1,94
			KSE, Inc.	Adsorption-Integrated-Reaction Process	V1,200/ V2,24
			Matrix Photocatalytic Inc.	Photocatalytic Water Treatment	V1,110
			Morrison Knudsen Corp./Spetstamponazhgeologia Enterprises/STG Technologies	Clay-Base Grouting Technology	V1,114
			Pulse Sciences, Inc.	X-ray Treatment of Aqueous Solutions	V2,90
			SBP Technologies, Inc.	Membrane Filtration and Bioremediation	V1,144
			Terra Vac, Inc.	In Situ and Ex Situ Vacuum Extraction	V1,160
			U.S. Filter/WTS Ultrox	Ultraviolet Radiation and Oxidation	V1,168
			U. of Nebraska - Lincoln	Center Pivot Spray Irrigation System	V1,170
			UV Technologies, Inc.	PhotoCAT™ Process	V2,112
			Roy F. Weston, Inc.	Ambersorb® 563 Adsorbent	V2,116
			Roy F. Weston, Inc./IEG Technologies	UVB - Vacuum Vaporizing Well	V1,176
			Xerox Corp.	2-PHASE™ EXTRACTION Process	V1,180
			ZENON Environmental Inc.	Cross-Flow Pervaporation System	V1,182
		Portable Gas Chromatographs	Bruker Analytical Systems, Inc.	Mobile Environmental Monitor	V3,20

APPLICABILITY INDEX (continued)

Media	Contaminants	Treatment Type	Technology Vendor	Technology	Volume, Page Number
Liquids (continued)	VOCs (continued)	Portable Gas Chromatographs (continued)	HNU Systems, Inc.	HNU GC 311D Portable Gas Chromatograph	V3,42
			Photovac Monitoring Instruments	PE Photovac Voyager Portable Gas Chromatograph	V3,56
			Sentex Sensing Technology, inc.	Scentograph Plus II Portable Gas Chromatograph	V3,60
			SRI Instruments	Compact Gas Chromatograph	V3,66
			U.S. EPA	Field Analytical Screening Program - PCB Method	V3,78
		Solidification/ Stabilization	Wheelabrator Clean Air Systems, Inc.	PO*WW*ER™ Technology	V1,178
		Spectrometers	Graseby Ionics, Ltd., and PCP, Inc.	Ion Mobility Spectrometry	V3,36
		Test Kits	Hanby Environmental Laboratory Procedure, Inc.	Test Kits for Organic Contaminants in Soil and Water	V3,38
			Strategic Diagnostic, Inc. Corp.	RaPID Assay®	V3,72
		Thermal Destruction	Texaco Inc.	Texaco Gasification Process	V1,162
		Other	Berkeley Environmental Restoration Center	In Situ Steam Enhanced Extraction Process	V1,28
	Other	Physical/ Chemical Treatment	North American Technologies Group, Inc.	Oleophilic Amine-Coated Ceramic Chip	V1,132
			RECRA Environmental, Inc.	Alternating Electrocoagulation Technology	V2,92
Mine Tailings	Metals	Materials Handling Solidification/Stabilization	U. of South Carolina	In Situ Mitigation of Acid Water	V2,108
			Rocky Mountain Remediation Services, L.L.C.	Envirobond Solution	V1,222
			Star Organics, L.L.C.	Soil Rescue Remediation Fluid	V1,232
Sediment	Aromatic VOCs	Biological Degradation	Bio-Rem Inc.	Augmented In Situ Subsurface Bioremediation Process	
			Electrokinetics, Inc.	In Situ Bioremediation by Electrokinetic Injection	V2,120
			GRACE Bioremediation Technologies	DARAMEND™ Bioremediation Technology	V1,90
			Institute of Gas Technology	Fluid Extraction - Biological Degradation Process	V2,58
			New York State Dept. Of Environmental Conservation/ENSR Consulting and Larsen Engineers	Ex Situ Biovault	V1,126
			New York State Dept. Of Environmental Conservation/R.E. Wright Environmental, Inc.	In Situ Bioventing Treatment System	V1,130

APPLICABILITY INDEX (continued)

Media	Contaminants	Treatment Type	Technology Vendor	Technology	Volume, Page Number
Sediment (continued)	Aromatic VOCs (continued)	Biological Degradation (continued)	IT Corp.	Oxygen Microbubble In Situ Bioremediation	V2,126
		Materials Handling	U.S. EPA	Excavation Techniques and Foam Suppression Methods	V1,166
		Physical/ Chemical Thermal Desorption	Biotherm, LCC	Biotherm Process	V1,36
			Maxymillian Technologies, Inc.	Thermal Desorption System	V1,112
			NOVATERRA, Inc.	In-Situ Soil Treatments (Steam/ Air Stripping)	V1,134
			Recycling Sciences International, Inc.	Desorption and Vapor Extraction System	V1,220
			Roy F. Weston, Inc.	Low Temperature Thermal Treatment (LT3®) System	V1,174
		Physical/ Chemical Treatment	Bergmann, A Division of Linatex, Inc.	Soil and Sediment Washing	V1,26
			CF Systems Corp.	Liquified Gas Solvent Extraction (LG-SX) Technology	V1,48
			Electrokinetics, Inc.	Electrokinetic Soil Processing	V1,66
			High Voltage Environmental Applications, Inc.	High Energy Electron Beam Irradiation	V2,54
			High Voltage Environmental Applications, Inc.	High Energy Electron Irradiation	V1,94
			Institute of Gas Technology	Supercritical Extraction/Liquid Phase Oxidation	V2,62
			Ionics RCC	B.E.S.T. Solvent Extraction Technology	V1,104
			IT Corp.	Mixed Waste Treatment Process	V2,68
			Terra Vac, Inc.	In Situ and Ex Situ Vacuum Extraction	V1,160
		Portable Gas Chromatographs	Bruker Analytical Systems, Inc.	Mobile Environmental Monitor	V3,20
			U.S. EPA	Field Analytical Screening Program - PCB Method	V3,78
		Solidification/ Stabilization	Geo-Con, Inc.	In Situ Solidification and Stabilization Process	V1,82
			Rocky Mountain Remediation Services, L.L.C.	Envirobond Solution	V1,222
			Star Organics, L.L.C.	Soil Rescue·Remediation Fluid	V1,232
			WASTECH, Inc.	Solidification and Stabilization	V1,172
			Western Product Recovery Group, Inc.	Coordinate, Chemical Bonding, and Adsorption Treatment	V2,114
		Spectrometers	Graseby Ionics, Ltd., and PCP, Inc.	Ion Mobility Spectrometry	V3,36
		Thermal Destruction	Sonotech, Inc.	Frequency-Turnable Pulse Combustion System	V1,154
			Texaco Inc.	Texaco Gasification Process	V1,162

APPLICABILITY INDEX (continued)

Media	Contaminants	Treatment Type	Technology Vendor	Technology	Volume, Page Number
Sediment (continued)	Aromatic VOCs (continued)	Thermal Destruction (continued)	U. of Dayton Research Institute	Photothermal Detoxification Unit	V2,106
			Vortec Corp.	Vitrification Process	V1,236
	Cyanide	Biological Degradation	Pintail Systems, Inc.	Spent Ore Bioremediation Process	V1,214
	Dioxins	Biological Degradation	Biotrol®	Soil Washing System	V1,40
			Institute of Gas Technology	Fluid Extraction - Biological Degradation Process	V2,58
		Materials Handling	U.S. EPA	Excavation Techniques and Foam Suppression Methods	V1,166
		Physical/ Chemical Thermal Desorption	ELI Eco Logic Inc.	Gas-Phase Chemical Reduction Process	V1,68
			ELI Eco Logic International Inc.	Thermal Desorption Unit	V1,70
			Recycling Sciences International, Inc.	Desorption and Vapor Extraction System	V1,220
			Roy F. Weston, Inc.	Low Temperature Thermal Treatment (LT3®) System	V1,174
		Physical/ Chemical Treatment	ART International, Inc.	Low-Energy Extraction Process (LEEP)	V2,20
			CF Systems Corp.	Liquified Gas Solvent Extraction (LG-SX) Technology	V1,48
			High Voltage Environmental Applications, Inc.	High Energy Electron Irradiation	V1,94
			Ionics RCC	B.E.S.T. Solvent Extraction Technology	V1,104
			IT Corp.	Mixed Waste Treatment Process	V2,68
			National Risk Management Research Laboratory and IT Corp.	Base-Catalyzed Decomposition Process	V1,116
			National Risk Management Research Laboratory and IT Corp.	Debris Washing System	V1,122
			Terra-Kleen Response Group	Solvent Extraction Treatment System	V1,158
			Trinity Environmental Technologies, Inc.	PCB- and Organochlorine-Contaminated Soil Detoxification	V2,104
		Portable Gas Chromatographs	Bruker Analytical Systems, Inc.	Mobile Environmental Monitor	V3,20
		Solidification/ Stabilization	Geosafe Corp.	GeoMelt Vitrification	V1,84
			WASTECH, Inc.	Solidification and Stabilization	V1,172
		Spectrometers	Graseby Ionics, Ltd., and PCP, Inc.	Ion Mobility Spectrometry	V3,36
		Test Kits	Strategic Diagnostic, Inc. Corp.	RaPID Assay®	V3,72
		Thermal Desorption	BWX Technologies, Inc.	Cyclone Furnace	V1,44

APPLICABILITY INDEX (continued)

Media	Contaminants	Treatment Type	Technology Vendor	Technology	Volume, Page Number
Sediment (continued)	Dioxins (continued)	Thermal Desorption (continued)	Energy and Environmental Research Corp.	Reactor Filter system	V2,42
			Institute of Gas Technology	Fluidized-Bed/Cyclonic Agglomerating Combustor	V2,60
			U. of Dayton Research Institute	Photothermal Detoxification Unit	V2,106
			Vortec Corp.	Vitrification Process	V1,236
	Explosives	Biological Degradation	J.R. Simplot Co.	The SABRE™ Process	V1,66
		Physical/ Chemical Thermal Desorption	New Jersey Institute of Technology	GHEA Associates Process	V2,86
	Furans	Biological Degradation	Biotrol®	Soil Washing System	V1,40
			Institute of Gas Technology	Fluid Extraction - Biological Degradation Process	V2,58
		Materials Handling	U.S. EPA	Excavation Techniques and Foam Suppression Methods	V1,166
		Physical/ Chemical Thermal Desorption	ELI Eco Logic Inc.	Gas-Phase Chemical Reduction Process	V1,68
			ELI Eco Logic International Inc.	Thermal Desorption Unit	V1,70
			Recycling Sciences International, Inc.	Desorption and Vapor Extraction System	V1,220
			Roy F. Weston, Inc.	Low Temperature Thermal Treatment (LT3®) System	V1,174
		Physical/ Chemical Treatment	ART International, Inc.	Low-Energy Extraction Process (LEEP)	V2,20
			CF Systems Corp.	Liquified Gas Solvent Extraction (LG-SX) Technology	V1,48
			High Voltage Environmental Applications, Inc.	High Energy Electron Irradiation	V1,94
			Ionics RCC	B.E.S.T. Solvent Extraction Technology	V1,104
			IT Corp.	Mixed Waste Treatment Process	V2,68
			National Risk Management Research Laboratory and IT Corp.	Base-Catalyzed Decomposition Process	V1,116
			National Risk Management Research Laboratory and IT Corp.	Debris Washing System	V1,122
			Terra-Kleen Response Group	Solvent Extraction Treatment System	V1,158
			Trinity Environmental Technologies, Inc.	PCB- and Organochlorine-Contaminated Soil Detoxification	V2,104
		Portable Gas Chromatographs	Bruker Analytical Systems, Inc.	Mobile Environmental Monitor	V3,20
		Solidification/ Stabilization	Geosafe Corp.	GeoMelt Vitrification	V1,84
			WASTECH, Inc.	Solidification and Stabilization	V1,172

APPLICABILITY INDEX (continued)

Media	Contaminants	Treatment Type	Technology Vendor	Technology	Volume, Page Number
Sediment (continued)	Furans (continued)	Spectrometers	Graseby Ionics, Ltd., and PCP, Inc.	Ion Mobility Spectrometry	V3,36
		Test Kits	Strategic Diagnostic, Inc. Corp.	RaPID Assay®	V3,72
		Thermal Desorption	BWX Technologies, Inc.	Cyclone Furnace	V1,44
			Energy and Environmental Research Corp.	Reactor Filter system	V2,42
			Institute of Gas Technology	Fluidized-Bed/Cyclonic Agglomerating Combustor	V2,60
			U. of Dayton Research Institute	Photothermal Detoxification Unit	V2,106
			Vortec Corp.	Vitrification Process	V1,236
	Halogenated VOCs	Biological Degradation	Biotrol®	Soil Washing System	V1,40
			Electrokinetics, Inc.	In Situ Bioremediation by Electrokinetic Injection	V2,120
			GRACE Bioremediation Technologies	DARAMEND™ Bioremediation Technology	V1,90
			Institute of Gas Technology	Fluid Extraction - Biological Degradation Process	V2,58
			J.R. Simplot Co.	The SABRE™ Process	V1,66
		Materials Handling	U.S. EPA	Excavation Techniques and Foam Suppression Methods	V1,166
		Physical Chemical Treatment - Biological Degradation	Lasagna™ Public - Private Partnership	Lasagna™ In Situ Remediation	V1,202
		Physical/ Chemical Thermal Desorption	ELI Eco Logic Inc.	Gas-Phase Chemical Reduction Process	V1,68
			ELI Eco Logic International Inc.	Thermal Desorption Unit	V1,70
			Maxymillian Technologies, Inc.	Thermal Desorption System	V1,112
			OHM Remediation Services Corp.	X*TRAX™ Thermal Desorption	V1,136
			Recycling Sciences International, Inc.	Desorption and Vapor Extraction System	V1,220
			Smith Environmental Technologies Corp.	Low Temperature Thermal Aeration (LTTA®)	V1,148
			Roy F. Weston, Inc.	Low Temperature Thermal Treatment (LT3®) System	V1,174
		Physical/ Chemical Treatment	ART International, Inc.	Low-Energy Extraction Process (LEEP)	V2,20
			Bergmann, A Division of Linatex, Inc.	Soil and Sediment Washing	V1,26
			CF Systems Corp.	Liquified Gas Solvent Extraction (LG-SX) Technology	V1,48
			High Voltage Environmental Applications, Inc.	High Energy Electron Irradiation	V1,94

APPLICABILITY INDEX (continued)

Media	Contaminants	Treatment Type	Technology Vendor	Technology	Volume, Page Number
Sediment (continued)	Halogenated VOCs (continued)	Pysical/Chemical Treatment (continued)	Ionics RCC	B.E.S.T. Solvent Extraction Technology	V1,104
			IT Corp.	Mixed Waste Treatment Process	V2,68
			National Risk Management Research Laboratory	Base-Catalyzed Decomposition Process	V1,116
			National Risk Management Research Laboratory and IT Corp.	Debris Washing System	V1,122
		Portable Gas Chromatographs	Bruker Analytical Systems, Inc.	Mobile Environmental Monitor	V3,20
		Solidification/ Stabilization	Chemfix Technologies, Inc.	Solidification and Stabilization	V1,50
			WASTECH, Inc.	Solidification and Stabilization	V1,172
		Spectrometers	Graseby Ionics, Ltd., and PCP, Inc.	Ion Mobility Spectrometry	V3,36
		Test Kits	Strategic Diagnostic, Inc. Corp.	RaPID Assay®	V3,72
		Thermal Destruction	BWX Technologies, Inc.	Cyclone Furnace	V1,44
			U. of Dayton Research Institute	Photothermal Detoxification Unit	V2,106
			Vortec Corp.	Vitrification Process	V1,236
	Mercury	Contaminant Survey systems	Quadrel Srvices, Inc.	Emflux Soil-Gas Survey System	V3,54
			Radiometer Analytical Group	Anodic Stripping Voltammetry for Mercury in Soil	V3,58
		Physical/ Chemical Treatment	Bionebraska, Inc.	BiMelyze® Mercury Immunoassay	V3,18
	Metals	Biological Degradation	Geo-Microbial Technologies, inc.	Metals Release and Removal from Wastes	V2,124
			Phytotech	Phytoremediation Technology	V1,212
			Pintail Systems, Inc.	Biomineralization of Metals	V2,130
			Pintail Systems, Inc.	Spent ore Bioremediation Process	V1,214
		Field Portable X-ray Fluorescence	NITON Corp.	XL Spectrum Analyzer	V3,52
			C-THRU Technologies Corporation	Metal Analysis Probe (MAP®) Portable Assayer	V3,22
			TN Spectrace	9000 X-Ray Fluorescence Analyzer and Lead X-Ray Fluorescence Analyzer	V3,74
		Materials Handling	AEA Technology Environment	Soil Separation and Washing Process	V2,16
			Montana College of Mineral Science and Technology	Campbell Centrifugal Jig	V2,84
			U.S. EPA	Excavation Techniques and Foam Suppression Methods	V1,166
			U. of South Carolina	In Situ Mitigation of Acid Water	V2,108

APPLICABILITY INDEX (continued)

Media	Contaminants	Treatment Type	Technology Vendor	Technology	Volume, Page Number
Sediment (continued)	Metals (continued)	Physical Chemical Treatment - Biological Degradation	Lasagna™ Public - Private Partnership	Lasagna™ In Situ Soil Remediation	V1,202
		Physical/ Chemical Thermal Desorption	New Jersey Institute of Technology	GHEA Associates Process	V2,86
		Physical/ Chemical Treatment	Bergmann, A Division of Linatex, Inc.	Soil and Sediment Washing	V1,26
			BioGenesis Enterprises, Inc.	BioGenesisSM Soil and Sediment Washing	V1,32
			Center for Hazardous Materials Research	Acid Extraction Treatment System	V2,30
			COGNIS, Inc.	TERRAMET Soil Remediation System	V1,52
			Dynaphore, Inc.	FORAGER® Sponge	V1,62
			Electrokinetics, Inc.	Electrokinetic Soil Processing	V1,66
			General Atomics, Nuclear Remediation Technologies Div.	Acoustic Barrier Particulate Separator	V2,48
			IT Corp.	Batch Steam Distillation and Metal Extraction	V2,64
			IT Corp.	Chelation/Electrodeposition of Toxic Metals from Soils	V2,66
			IT Corp.	Mixed Waste Treatment Process	V2,68
			National Risk Management Research Laboratory and IT Corp.	Debris Washing System	V1,122
			Selentec Environmental Technologies, Inc.	Selentec MAG*SEP Technology	V1,226
			Toronto Harbour Commission	Soil Recycling	V1,162
		Solidification/ Stabilization	Chemfix Technologies, Inc.	Solidification and Stabilization	V1,50
			Ferro Corp.	Waste Vitrification Through Electric Melting	V2,46
			Funderburk & Associates	Dechlorination and Immobilization	V1,78
			Geo-Con, Inc.	In Situ Solidification and Stabilization Process	V1,82
			Geosafe Corp.	GeoMelt Vitrification	V1,84
			Sevenson Environmental Services, Inc.	MAECTITE® Chemical Treatment Process	V3,60
			Soliditech, inc.	Solidification and Stabilization	V1,152
			STC Remediation, A Division of Omega Environmental, Inc.	Organic Stabilization and Chemical Fixation/ Solidification	V1,156
			WASTECH, Inc.	Solidification and Stabilization	V1,172
			Western Product Recovery Group, Inc.	Coordinate, Chemical Bonding, and Adsorption Treatment	V2,114

APPLICABILITY INDEX (continued)

Media	Contaminants	Treatment Type	Technology Vendor	Technology	Volume, Page Number
Sediment (continued)	Metals (continued)	Thermal Destruction	BWX Technologies, Inc.	Cyclone Furnace	V1,44
			Energy and Environmental Research Corp.	Hybrid Fluidized Bed System	V2,40
			Energy and Environmental Research Corp.	Reactor Filter System	V2,42
			Horsehead Resource Development Co., Inc.	Flame Reactor	V1,96
			Institute of Gas Technology	Fluidized-Bed/Cyclonic Agglomerating Combustor	V2,60
			Vortec Corp.	Vitrification Process	V1,236
	Organics	Thermal Destruction	Gruppo Italimpresse	Infared Thermal Destruction	V1,92
	PAHs	Biological Degradation	ECOVA Corp.	Bioslurry Reactor	V1,64
			Environmental BioTechnologies, Inc.	Fungal Degradation Process	V2,44
			Institute of Gas Technology	Fluid Extraction - Biological Degradation Process	V2,58
			Remediation Technologies, Inc.	Liquid and Solids Biological Treatment	V1,140
		Physical/ Chemical Thermal Desorption	Maxymillian Technologies, inc.	Thermal Desorption and Vapor Extraction System	V1,112
			Recycling Sciences International, Inc.	Desorption and Vapor Extraction System	V1,220
		Physical/ Chemical Treatment	Bergmann, A Division of Linatex, Inc.	Soil and Sediment Washing	V1,26
			BioGenesis Enterprises, Inc.	BioGenesisSM Soil and Sediment Washing Process	V1,32
		Portable Gas Chromatographs	Bruker Analytical Systems, Inc.	Mobile Environmental Monitor	V3,20
	PCBs	Biological Degradation	Institute of Gas Technology	Chemical and Biological Treatment	V2,56
			Institute of Gas Technology	Fluid Extraction - Biological Degradation Process	V2,58
			Phytokinetics, Inc.	Phytoremediation Process	V1,210
		Materials Handling	U.S. EPA	Excavation Techniques and Foam Suppression Methods	V1,166
		Physical/ Chemical Thermal Desorption	Biotherm, LCC	Biotherm Process	V1,36
			ELI Eco Logic International Inc.	Gas-Phase Chemical Reduction Process	V1,68
			ELI Eco Logic International Inc.	Thermal Desorption Unit	V1,70
			KAI Technologies, Inc./ Brown and Root Environmental	Radio Frequency Heating	V1,106
			New Jersey Institute of Technology	GHEA Associates Process	V2,86

APPLICABILITY INDEX (continued)

Media	Contaminants	Treatment Type	Technology Vendor	Technology	Volume, Page Number
Sediment (continued)	PCBs (continued)	Physical/ Chemical Thermal Desorption (continued)	OHM Remediation Services Corp.	X*TRAX™ Thermal Desorption	V1,136
			Recycling Sciences International, Inc.	Desorption and Vapor Extraction System	V1,220
			Roy F. Weston, Inc.	Low Temperature Thermal Treatment (LT3®) System	V1,174
		Physical/ Chemical Treatment	ART International, Inc.	Low-Energy Extraction Process (LEEP)	V2,20
			Bergmann, A Division of Linatex, Inc.	Soil and Sediment Washing	V1,26
			BioGenesis Enterprises, Inc.	BioGenesisSM Soil and Sediment Washing Process	V1,32
			CF Systems Corp.	Liquified Gas Solvent Extraction (LG-SX) Technology	V1,48
			Commodore Environmental Services, Inc.	Solvated Electron Remediation System	V1,56
			General Atomics	Circulating Bed Combustor	V1,80
			High Voltage Environmental Applications, Inc.	High Energy Electron Beam Irradiation	V2,54
			High Voltage Environmental Applications, Inc.	High Energy Electron Irradiation	V1,94
			Ionics RCC	B.E.S.T. Solvent Extraction Technology	V1,104
			IT Corp.	Mixed Waste Treatment Process	V2,68
			National Risk Management Research Laboratory	Base-Catalyzed Decomposition Process	V1,116
			National Risk Management Research Laboratory and IT Corp.	Debris Washing System	V1,122
			State U. of New York at Oswego, Environmental Research Center	Electrochemical Peroxidation of PCB-Contaminated Sediments and Waters	V2,98
			Terra-Kleen Response Group, Inc.	Solvent Extraction Treatment System	V1,158
			Trinity Environmental Technologies, Inc.	PCB- and Organochlorine-Contaminated Soil Detoxification	V2,104
		Portable Gas Chromatographs	Bruker Analytical Systems, Inc.	Mobile Environmental Monitor	V3,20
			U.S. EPA	Field Analytical Screening Program - PCB Method	V3,78
		Solidification/ Stabilization	Chemfix Technologies, Inc.	Solidification and Stabilization	V1,50
			Funderburk & Associates	Dechlorination and Immobilization	V1,78
			Geo-Con, Inc.	In Situ Solidification and Stabilization Process	V1,82

APPLICABILITY INDEX (continued)

Media	Contaminants	Treatment Type	Technology Vendor	Technology	Volume, Page Number
Sediment (continued)	PCBs (continued)	Solidification/ Stabilization (continued)	Geosafe Corp.	GeoMelt Vitrification	V1,84
			Soliditech, inc.	Solidification and Stabilization	V1,152
			WASTECH, Inc.	Solidification and Stabilization	V1,172
		Spectrometers	Graseby Ionics, Ltd., and PCP, Inc.	Ion Mobility Spectrometry	V3,36
		Test Kits	Strategic Diagnostic, Inc.	Ensys Penta Test System	V3,68
		Thermal Destruction	BWX Technologies, Inc.	Cyclone Furnace	V1,44
			Energy and Environmental Research Corp.	Hybrid Fluidized Bed System	V2,40
			Institute of Gas Technology	Fluidized-Bed/Cyclonic Agglomerating Combustor	V2,60
			U. of Dayton Research Institute	Photothermal Detoxification Unit	V2,106
			Vortec Corp.	Vitrification Process	V1,236
	PCP	Biological Degradation	Remediation Technologies, Inc.	Liquid and Solids Biological Treatment	V1,140
		Physical/ Chemical Thermal Desorption	Recycling Sciences International, Inc.	Desorption and Vapor Extraction System	V1,220
		Physical/ Chemical Treatment	Trinity Environmental Technologies, Inc.	PCB- and Organochlorine-Contaminated Soil Detoxification	V2,104
		Test Kits	Strategic Diagnostic, Inc.	Ensys Penta Test System	V3,68
			Strategic Diagnostic, Inc. Corp.	RaPID Assay®	V3,72
	Pesticides	Biological Degradation	Biotrol®	Soil Washing System	V1,40
			Electrokinetics, Inc.	In Situ Bioremediation by Electrokinetic Injection	V2,120
			GRACE Bioremediation Technologies	DARAMEND™ Bioremediation Technology	V1,90
			Institute of Gas Technology	Chemical and Biological Treatment	V2,56
			Institute of Gas Technology	Fluid Extraction - Biological Degradation Process	V2,58
			Phytokinetics, Inc.	Phytoremediation Process	V1,210
		Materials Handling	U.S. EPA	Excavation Techniques and Foam Suppression Methods	V1,166
		Physical/ Chemical Thermal Desorption	Biotherm, LCC	Biotherm Process	V1,36
			ELI Eco Logic Inc.	Gas-Phase Chemical Reduction Process	V1,68
			ELI Eco Logic International Inc.	Thermal Desorption Unit	V1,70
			KAI Technologies, Inc./ Brown and Root Environmental	Radio Frequency Heating	V1,106
			OHM Remediation Services Corp.	X*TRAX™ Thermal Desorption	V1,136

APPLICABILITY INDEX (continued)

Media	Contaminants	Treatment Type	Technology Vendor	Technology	Volume, Page Number
Sediment (continued)	Pesticides (continued)	Physical/Chemical Thermal Desorption (continued)	Recycling Sciences International, Inc.	Desorption and Vapor Extraction System	V1,220
			Smith Environmental Technologies Corp.	Low Temperature Thermal Aeration (LTTA®)	V1,148
			Roy F. Weston, Inc.	Low Temperature Thermal Treatment (LT3®) System	V1,174
		Physical/ Chemical Treatment	ART International, Inc.	Low-Energy Extraction Process (LEEP)	V2,20
			Bergmann, A Division of Linatex, Inc.	Soil and Sediment Washing	V1,26
			CF Systems Corp.	Liquified Gas Solvent Extraction (LG-SX) Technology	V1,48
			Commodore Environmental Services, Inc.	Solvated Electron Remediation System	V1,56
			Electrokinetics, Inc.	Electrokinetic Soil Processing	V1,66
			General Atomics	Circulating Bed Combustor	V1,80
			High Voltage Environmental Applications, Inc.	High Energy Electron Beam Irradiation	V2,54
			High Voltage Environmental Applications, Inc.	High Energy Electron Irradiation	V1,94
			Ionics RCC	B.E.S.T. Solvent Extraction Technology	V1,104
			IT Corp.	Mixed Waste Treatment Process	V2,68
			National Risk Management Research Laboratory	Base-Catalyzed Decomposition Process	V1,116
			National Risk Management Research Laboratory and IT Corp.	Debris Washing System	V1,122
			State U. of New York at Oswego, Environmental Research Center	Electrochemical Peroxidation of PCB-Contaminated Sediments and Waters	V2,98
			Terra-Kleen Response Group, Inc.	Solvent Extraction Treatment System	V1,158
			Trinity Environmental Technologies, Inc.	PCB- and Organochlorine-Contaminated Soil Detoxification	V2,104
		Portable Gas Chromatographs	Bruker Analytical Systems, Inc.	Mobile Environmental Monitor	V3,20
			U.S. EPA	Field Analytical Screening Program - PCB Method	V3,78
		Solidification/ Stabilization	Chemfix Technologies, Inc.	Solidification and Stabilization	V1,50
			Funderburk & Associates	Dechlorination and Immobilization	V1,78
			Geo-Con, Inc.	In Situ Solidification and Stabilization Process	V1,82
			Geosafe Corp.	GeoMelt Vitrification	V1,84

APPLICABILITY INDEX (continued)

Media	Contaminants	Treatment Type	Technology Vendor	Technology	Volume, Page Number
Sediment (continued)	Pesticides (continued)	Solidification/ Stabilization (continued)	Soliditech, inc.	Solidification and Stabilization	V1,152
			WASTECH, Inc.	Solidification and Stabilization	V1,172
		Spectrometers	Graseby Ionics, Ltd., and PCP, Inc.	Ion Mobility Spectrometry	V3,36
		Test Kits	Strategic Diagnostic, Inc.	Ensys Penta Test System	V3,68
			Strategic Diagnostic, Inc. Corp.	RaPID Assay®	V3,72
		Thermal Destruction	BWX Technologies, Inc.	Cyclone Furnace	V1,44
			Energy and Environmental Research Corp.	Hybrid Fluidized Bed System	V2,40
			Institute of Gas Technology	Fluidized-Bed/Cyclonic Agglomerating Combustor	V2,60
			U. of Dayton Research Institute	Photothermal Detoxification Unit	V2,106
			Vortec Corp.	Vitrification Process	V1,236
	Petroleum Hydrocarbons	Biological Degradation	ECOVA Corp.	Bioslurry Reactor	V1,64
			Remediation Technologies, Inc.	Liquid and Solids Biological Treatment	V1,140
		Physical/ Chemical Thermal Desorption	New Jersey Institute of Technology	GHEA Association process	V2,86
			Smith Environmental Technologies Corp.	Low Temperature Thermal Aeration (LTTA®)	V1,148
		Solidification/ Stabilization	Soliditech, Inc.	Solidification and Stabilization	V1,152
	Radionuclides	Materials Handling	Thermo Nutech, Inc.	Segmented Gate System	V2,134
		Physical/ Chemical Treatment	Bergmann, A Division of Linatex, Inc.	Soil and Sediment Washing	V1,26
			IT Corp.	Mixed Waste Treatment Process	V2,68
			Selentec Environmental Technologies, Inc.	Selentec MAG*SEP Technology	V1,226
		Solidification/ Stabilization	Sevenson Environmental Services, Inc.	MAECTITE® Chemical Treatment Process	V1,228
			WASTECH, Inc.	Solidification and Stabilization	V1,172
		Thermal Destruction	BWX Technologies, Inc.	Cyclone Furnace	V1,44
	SVOCs	Biological Degradation	Biotrol®	Soil Washing System	V1,40
			ECOVA Corp.	Bioslurry Reactor	V1,64
			GRACE Bioremediation Technologies	DARAMEND™ Bioremediation Technology	V1,90
			Institute of Gas Technology	Chemical and Biological Treatment	V2,56
			Institute of Gas Technology	Fluid Extraction - Biological Degradation Process	V2,58
			IT Corp.	Tekno Associates Bioslurry Reactor	V2,72

APPLICABILITY INDEX (continued)

Media	Contaminants	Treatment Type	Technology Vendor	Technology	Volume, Page Number
Sediment (continued)	SVOCs (continued)	Biological Degradation (continued)	New York State Dept. Of Environmental Conservation/ENSR Consulting and Larsen Engineers	Ex Situ Biovault	V1,126
			New York State Dept. Of Environmental Conservation/R.E. Wright Environmental, Inc.	In Situ Bioventing Treatment System	V1,130
			IT Corp.	Oxygen Microbubble In Situ Bioremediation	V2,126
			Remediation Technologies, Inc.	Liquid and Solids Biological Treatment	V1,140
		Contaminant Survey systems	Quadrel Srvices, Inc.	Emflux Soil-Gas Survey System	V3,54
		Materials Handling	U.S. EPA	Excavation Techniques and Foam Suppression methods	V1,166
		Physical/ Chemical Thermal Desorption	Biotherm, LCC	Biotherm Process	V1,36
			ELI Eco Logic Inc.	Gas-Phase Chemical Reduction Process	V1,68
			ELI Eco Logic International Inc.	Thermal Desorption Unit	V1,70
			KAI Technologies, Inc./Brown and Root Environmental	Radio Frequency Heating	V1,106
			Maxymillian Technologies, Inc.	Thermal Desorption System	V1,112
			New Jersey Institute of Technology	GHEA Association process	V2,86
			NOVATERRA, Inc.	In-Situ Soil Treatments (Steam/ Air Stripping)	V1,134
			OHM Remediation Services Corp.	X*TRAX™ Thermal Desorption	V1,136
			Recycling Sciences International, Inc.	Desorption and Vapor Extraction System	V1,220
			Smith Environmental Technologies Corp.	Low Temperature Thermal Aeration (LTTA®)	V1,148
			Roy F. Weston, Inc.	Low Temperature Thermal Treatment (LT3®) System	V1,174
		Physical/ Chemical Treatment	Bergmann, A Division of Linatex, Inc.	Soil and Sediment Washing	V1,26
			CF Systems Corp.	Liquified Gas Solvent Extraction (LG-SX) Technology	V1,48
			Electrokinetics, Inc.	Electrokinetic Soil Processing	V1,66
			High Voltage Environmental Applications, Inc.	High Energy Electron Beam Irradiation	V2,54

APPLICABILITY INDEX (continued)

Media	Contaminants	Treatment Type	Technology Vendor	Technology	Volume, Page Number
Sediment (continued)	SVOCs (continued)	Physical/ Chemical Treatment (continued)	High Voltage Environmental Applications, Inc.	High Energy Electron Irradiation	V1,94
			Ionics RCC	B.E.S.T. Solvent Extraction Technology	V1,104
			IT Corp.	Mixed Waste Treatment Process	V2,68
			National Risk Management Research Laboratory	Base-Catalyzed Decomposition Process	V1,116
			National Risk Management Research Laboratory and IT Corp.	Debris Washing System	V1,122
			Terra-Kleen Response Group, Inc.	Solvent Extraction Treatment System	V1,158
			Terra Vac, Inc.	In Situ and Ex Situ Vacuum Extraction	V1,160
			Toronto Harbour Commission	Soil Recycling.	V1,162
		Portable Gas Chromatographs	Bruker Analytical Systems, Inc.	Mobile Environmental Monitor	V3,20
			U.S. EPA	Field Analytical Screening Program - PCB Method	V3,78
		Solidification/ Stabilization	Chemfix Technologies, Inc.	Solidification and Stabilization	V1,50
			Geo-Con, Inc.	In Situ Solidification and Stabilization Process	V1,82
			STC Remediation, A Division of Omega Environmental, Inc.	Organic Stabilization and Chemical Fixation/ Solidification	V1,156
			WASTECH, Inc.	Solidification and Stabilization	V1,172
			Western Product Recovery Group, Inc.	Coordinate, Chemical Bonding, and Adsorption Treatment	V2,114
		Spectrometers	Graseby Ionics, Ltd., and PCP, Inc.	Ion Mobility Spectrometry	V3,36
		Test Kits	Strategic Diagnostic, Inc. Corp.	RaPID Assay®	V3,72
		Thermal Destruction	BWX Technologies, Inc.	Cyclone Furnace	V1,44
			Institute of Gas Technology	Fluidized-Bed/Cyclonic Agglomerating Combustor	V2,60
			Sonotech, Inc.	Frequency-Tunable Pulse Combustion System	V1,154
			Texaco Inc.	Texaco Gasification Process	V1,162
			U. of Dayton Research Institute	Photothermal Detoxification Unit	V2,106
			Vortec Corp.	Vitrification Process	V1,236
	VOCs	Biological Degradation	Bio-Rem, Inc.	Augmented In Situ Subsurface Bioremediation Process	V1,34
			ECOVA Corp.	Bioslurry Reactor	V1,64

APPLICABILITY INDEX (continued)

Media	Contaminants	Treatment Type	Technology Vendor	Technology	Volume, Page Number
Sediment (continued)	VOCs (continued)	Biological Degradation (continued)	Electrokinetics, Inc.	In Situ Bioremediation by Electrokinetic Injection	V2,120
			New York State Dept. Of Environmental Conservation/ENSR Consulting and Larsen Engineers	Ex Situ Biovault	V1,126
			New York State Dept. Of Environmental Conservation/R.E. Wright Environmental, Inc.	In Situ Bioventing Treatment System	V1,130
			IT Corp.	Oxygen Microbubble In Situ Bioremediation	V2,126
			Phytokinetics, Inc.	Phytoremediation Process	V1,210
		Contaminant Survey systems	Quadrel Srvices, Inc.	Emflux Soil-Gas Survey System	V3,54
		Materials Handling	AEA Technology Environment	Soil Separation and Washing Process	V2,16
			U.S. EPA	Excavation Techniques and Foam Suppression methods	V1,166
		Physical/ Chemical Thermal Desorption	Biotherm, LCC	Biotherm Process	V1,36
			KAI Technologies, Inc./Brown and Root Environmental	Radio Frequency Heating	V1,106
			Maxymillian Technologies, Inc.	Thermal Desorption System	V1,112
			New Jersey Institute of Technology	GHEA Association process	V2,86
			NOVATERRA, Inc.	In-Situ Soil Treatments (Steam/ Air Stripping)	V1,134
			Recycling Sciences International, Inc.	Desorption and Vapor Extraction System	V1,220
			Smith Environmental Technologies Corp.	Low Temperature Thermal Aeration (LTTA®)	V1,148
			Roy F. Weston, Inc.	Low Temperature Thermal Treatment (LT3®) System	V1,174
		Physical/ Chemical Treatment	CF Systems Corp.	Liquified Gas Solvent Extraction (LG-SX) Technology	V1,48
			High Voltage Environmental Applications, Inc.	High Energy Electron Irradiation	V1,94
			Institute of Gas Technology	Supercritical Extraction/Liquid Phase Oxidation	V2,62
			Ionics RCC	B.E.S.T. Solvent Extraction Technology	V1,104
			IT Corp.	Batch Steam Distillation and Metal Extraction	V2,64
			IT Corp.	Mixed Waste Treatment Process	V2,68

APPLICABILITY INDEX (continued)

Media	Contaminants	Treatment Type	Technology Vendor	Technology	Volume, Page Number
Sediment (continued)	VOCs (continued)	Physical/ Chemical Treatment (continued)	Terra-Kleen Response Group, Inc.	Solvent Extraction Treatment System	V1,158
			Terra Vac, Inc.	In Situ and Ex Situ Vacuum Extraction	V1,160
		Portable Gas Chromatographs	Bruker Analytical Systems, Inc.	Mobile Environmental Monitor	V3,20
			U.S. EPA	Field Analytical Screening Program - PCB Method	V3,78
		Solidification/ Stabilization	Geo-Con, Inc.	In Situ Solidification and Stabilization Process	V1,82
			WASTECH, Inc.	Solidification and Stabilization	V1,172
			Western Product Recovery Group, Inc.	Coordinate, Chemical Bonding, and Adsorption Treatment	V2,114
		Spectrometers	Graseby Ionics, Ltd., and PCP, Inc.	Ion Mobility Spectrometry	V3,36
		Test Kits	Strategic Diagnostic, Inc. Corp.	RaPID Assay®	V3,72
		Thermal Destruction	Energy and Environmental Research Corp.	Hybrid Fluidized Bed System	V2,40
			Institute of Gas Technology	Fluidized-Bed/Cyclonic Agglomerating Combustor	V2,60
			Sonotech, Inc.	Frequency-Tunable Pulse Combustion System	V1,154
			Texaco Inc.	Texaco Gasification Process	V1,162
			Vortec Corp.	Vitrification Process	V1,236
	Other	Solidification/ Stabilization	STC Remediation, A Division of Omega Environmental, Inc.	Organic Stabilization and Chemical Fixation/ Solidification	V1,156
Sludge	Aromatic VOCs	Biological Degradation	Bio-Rem, Inc.	Augmented In Situ Subsurface Bioremediation Process	V1,34
			Electrokinetics, Inc.	In Situ Bioremediation By Electrokinetic Injection	V2,120
			GRACE Bioremediation Technologies	DARAMEND™ Bioremediation Technology	V1,90
			Institute of Gas Technology	Fluid Extraction - Biological Degradation process	V2,58
			New York State Dept. of Environmental Conservation/ ENSR Consulting and Larsen Engineers	Ex Situ Biovault	V1,126
			New York State Dept. of Environmental Conservation/ R.E. Wright Environmental, Inc.	In Situ Bioventing Treatment System	V1,130

APPLICABILITY INDEX (continued)

Media	Contaminants	Treatment Type	Technology Vendor	Technology	Volume, Page Number
Sludge (continued)	Aromatic VOCs (continued)	Biological Degradation (Continued)	IT Corp.	Oxygen Microbubble In Situ Bioremediation	V2,126
		Materials Handling	United States Environmental Protection Agency	Excavation Techniques and Foam Suppression Methods	V1,166
		Physical/ Chemical Thermal Desorption	Biotherm, LCC	Biotherm Process	V1,36
			Maxymillian Technologies, Inc.	Thermal Desorption System	V1,112
			NOVATERRA, Inc.	In-Situ Soil Treatments (Steam/Air Stripping)	V1,134
			Recycling Sciences International, Inc.	Desorption and Vapor Extraction System	V1,220
			Smith Environmental Technologies Corp.	Low Temperature Thermal Aeration [LTTA®]	V1,148
		Physical/ Chemical Treatment	CF Systems Corp.	Liquified Gas Solvent Extraction [LG-SX] Technology	V1,48
			Electrokinetics, inc.	Electrokinetic Soil Processing	V1,66
			High Voltage Environmental Applications, Inc.	High-Energy Electron Beam Irradiation	V2,54
			High Voltage Environmental Applications, Inc.	High-Energy Electron Irradiation	V1,94
			Institute of Gas Technology	Supercritical Extraction/Liquid Phase Oxidation	V2,62
			Ionics RCC	B.E.S.T. Solvent Extraction Technology	V1,104
			IT Corp.	Mixed Waste Treatment Process	V2,68
			Terra Vac, Inc.	In Situ and Ex Situ Vacuum Extraction	V1,160
		Portable Gas Chromatographs	Bruker Analytical Systems, Inc.	Mobile Environmental Monitor	V3,20
			United States Environmental Protection Agency	Field Analytical Screening Program - PCB Method	V3,78
		Solidification/ Stabilization	Geo-Con, Inc.	In Situ Solidification and Stabilization Process	V1,82
			WASTECH, Inc.	Solidification/ Stabilization	V1,172
			Western Product Recovery Group, Inc.	Coordinate, Chemical Bonding, and Adsorption Treatment	V2,114
		Spectrometers	Graseby Ionics, Ltd., and PCP, Inc.	Ion Mobility Spectrometry	V3,36
		Thermal Destruction	Sonotech, Inc.	Frequency-Tunable Pulse Combustion System	V1,154
			Texaco, Inc.	Texaco Gasification Process	V1,162

APPLICABILITY INDEX (continued)

Media	Contaminants	Treatment Type	Technology Vendor	Technology	Volume, Page Number
Sludge (continued)	Aromatic VOCs (continued)	Thermal Destruction (continued)	U. of Dayton Research Institute	Photothermal Detoxification Unit	V2,106
			Vortec Corp.	Vitrification Process	V1,236
	Cyanide	Biological Degradation	Pintail Systems, Inc.	Spent ore Bioremediation Process	V1,214
	Dioxins	Biological Degradation	Institute of Gas Technology	Fluid Extraction - Biological Degradation Process	V2,58
		Materials Handling	U.S. EPA	Excavation Techniques and Foam Suppression Methods	V1,166
		Physical/ Chemical Thermal Desorption	ELI Eco Logic Inc.	Gas-Phase Chemical Reduction Process	V1,68
			ELI Eco Logic International Inc.	Thermal Desorption unit	V1,70
			Recycling Sciences International, Inc.	Desorption and Vapor Extraction System	V1,220
			Roy F. Weston, Inc.	Low Temperature Thermal Treatment (LT3®) Systems	V1,174
		Physical/ Chemical Treatment	ART International, Inc.	Low-Energy Extraction Process (LEEP)	V2,20
			CF Systems Corp.	Liquified Gas Solvent Extraction [LG-SX] Technology	V1,48
			High Voltage Environmental Applications, Inc.	High-Energy Electron Irradiation	V1,94
			Ionics RCC	B.E.S.T. Solvent Extraction Technology	V1,104
			IT Corp.	Mixed Waste Treatment Process	V2,68
			National Risk Management Research laboratory	Base-Catalyzed Decomposition Process	V1,116
			National Risk Management Research laboratory	Debris Washing System	V1,122
			Terra-Kleen Response Group, Inc.	Solvent Extraction Treatment System	V1,158
			Trinity Environmental Technologies, Inc.	PCB- and Organochlorine-Contaminated Soil Detoxification	V2,104
		Portable Gas Chromatographs	Bruker Analytical Systems, Inc.	Mobile Environmental Monitor	V3,20
		Solidification/ Stabilization	Geosafe Corp.	GeoMelt Vitrification	V1,84
			WASTECH, Inc.	Solidification/ Stabilization	V1,172
		Thermal Destruction	BWX Technologies, Inc.	Cyclone Furnace	V1,44
			Energy and Environmental Research Corp.	Reactor Filter System	V2,42

APPLICABILITY INDEX (continued)

Media	Contaminants	Treatment Type	Technology Vendor	Technology	Volume, Page Number
Sludge (continued)	Dioxins (continued)	Thermal Destruction (continued)	Institute of Gas Technology	Fluidized-Bed/ Cyclonic Agglomerating Combustor	V2,60
			U. of Dayton Research Institute	Photothermal Detoxification unit	V2,106
			Vortec Corp.	Vitrification Process	V1,236
	Explosives	Biological Degradation	J.R. Simplot Co.	The SABRE™ Process	V1,66
		Physical/ Chemical Thermal Desorption	New Jersey Institute of Technology	GHEA Associates Process	V2,86
	Furans	Biological Degradation	Institute of Gas Technology	Fluid Extraction - Biological Degradation Process	V2,58
		Materials Handling	U.S. EPA	Excavation Techniques and Foam Suppression Methods	V1,166
		Physical/ Chemical Thermal Desorption	ELI Eco Logic Inc.	Gas-Phase Chemical Reduction Process	V1,68
			ELI Eco Logic International Inc.	Thermal Desorption Unit	V1,70
			Recycling Sciences International, Inc.	Desorption and Vapor Extraction System	V1,220
			Roy F. Weston, Inc.	Low Temperature Thermal Treatment (LT3®) System	V1,174
		Physical/ Chemical Treatment	ART International, Inc.	Low-Energy Extraction Process (LEEP)	V2,20
			CF Systems Corp.	Liquified Gas Solvent Extraction (LG-SX) Technology	V1,48
			High Voltage Environmental Applications, Inc.	High-Energy Electron Irradiation	V1,94
			Ionics RCC	B.E.S.T. Solvent Extraction Technology	V1,104
			IT Corp.	Mixed Waste Treatment Process	V2,68
			National Risk Management Research Laboratory	Base-Catalyzed Decomposition Process	V1,116
			National Risk Management Research Laboratory	Debris Washing System	V1,122
			Terra-Kleen Response Group, Inc.	Solvent Extraction Treatment Systems	V1,158
			Trinity Environmental Technologies, Inc.	PCB- and Organochlorine-Contaminated Soil Detoxification	V2,104
		Portable Gas Chromatographs	Bruker Analytical Systems, Inc.	Mobile Environmental Monitor	V3,20
		Solidification/ Stabilization	Geosafe Corp.	GeoMelt Vitrification	V1,84
			WASTECH, Inc.	Solidification and Stabilization	V1,172
		Thermal Desorption	BWX Technologies, Inc.	Cyclone Furnace	V1,44

APPLICABILITY INDEX (continued)

Media	Contaminants	Treatment Type	Technology Vendor	Technology	Volume, Page Number
Sludge (continued)	Furans (continued)	Thermal Desorption (continued)	Energy and Environmental Research Corp.	Reactor Filter System	V2,42
			Institute of Gas Technology	Fluidized-Bed/ Cyclonic Agglomerating Combustor	V2,60
			U. of Dayton Research Institute	Photothermal Detoxification unit	V2,106
			Vortec Corp.	Vitrification Process	V1,236
	Halogenated VOCs	Biological Degradation	Bio-Rem, Inc.	Augmented In Situ Subsurface Bioremediation Process	V1,34
			New York State Dept. of Environmental Conservation/ ENSR Consulting and Larsen Engineers	Ex Situ Biovault	V1,126
			New York State Dept. of Environmental Conservation/ R.E. Wright Environmental, Inc.	In Situ Bioventing Treatment System	V1,130
			IT Corp.	Oxygen Microbubble In Situ Bioremediation	V2,126
		Materials Handling	United States Environmental Protection Agency	Excavation Techniques and Foam Suppression Methods	V1,166
		Physical/ Chemical Treatment - Biological Degradation	Lasagna™ Public-Private Partnership	Lasagna™ In Situ Soil Remediation	V1,202
		Physical/ Chemical Thermal Desorption	KAI Technologies, Inc./Brown and Root Environmental	Radio Frequency Heating	V1,106
			New Jersey Institute of Technology	GHEA Associates Process	V2,86
			NOVATERRA, Inc.	In-Situ Soil Treatments (Steam/Air Stripping)	V1,134
			OHM Remediation Services Corp.	X*TRAX™ Thermal Desorption	V1,136
			Recycling Sciences International, Inc.	Desorption and Vapor Extraction System	V1,220
			Roy F. Weston, Inc.	Low Temperature Thermal Treatment (LT3®) System	V1,174
		Physical/ Chemical Treatment	CF Systems Corp.	Liquified Gas Solvent Extraction [LG-SX] Technology	V1,48
			Commodore Environmental Services, Inc.	Solvated Electron Remediation System	V1,56
			Electrokinetics, inc.	Electrokinetic Soil Processing	V1,66

APPLICABILITY INDEX (continued)

Media	Contaminants	Treatment Type	Technology Vendor	Technology	Volume, Page Number
Sludge (continued)	Halogenated VOCs (continued)	Physical/Chemical Treatment (continued)	High Voltage Environmental Applications, Inc.	High-Energy Electron Beam Irradiation	V2,54
			High Voltage Environmental Applications, Inc.	High-Energy Electron Irradiation	V1,94
			Institute of Gas Technology	Supercritical Extraction/Liquid Phase Oxidation	V2,62
			Ionics RCC	B.E.S.T. Solvent Extraction Technology	V1,104
			IT Corp.	Mixed Waste Treatment Process	V2,68
			Terra Vac, Inc.	In Situ and Ex Situ Vacuum Extraction	V1,160
			Trinity Environmental Technologies, Inc.	PCB- and Organochlorine-Contaminated Soil Detoxification	V2,104
		Portable Gas Chromatographs	Bruker Analytical Systems, Inc.	Mobile Environmental Monitor	V3,20
			United States Environmental Protection Agency	Field Analytical Screening Program - PCB Method	V3,78
		Solidification/ Stabilization	Geo-Con, Inc.	In Situ Solidification and Stabilization Process	V1,82
			WASTECH, Inc.	Solidification/ Stabilization	V1,172
		Spectrometers	Graseby Ionics, Ltd., and PCP, Inc.	Ion Mobility Spectrometry	V3,36
		Thermal Destruction	Energy and Environmental Research Corp.	Hybrid Fluidized Bed System	V2,40
			Texaco, Inc.	Texaco Gasification Process	V1,162
			U. of Dayton Research Institute	Photothermal Detoxification Unit	V2,106
			Vortec Corp.	Vitrification Process.	V1,236
	Heavy Metals	Field Portable X-ray Fluorescence	HNU Systems, Inc.	HNU Source Excited Fluorescence Analyzer-Portable (SEFA-P) X-ray Fluorescence Analyzer	V3,44
	Heavy Minerals	Materials Handling	Montana College of Mineral Science and Technology	Campbell Centrifugal Jig	V2,84
	Herbicides	Biological Degradation	Electrokinetics, Inc.	In Situ Bioremediation by Electrokinetic Injection	V2,120
			GRACE Bioremediation Technologies	DARAMEND™ Bioremediation Technology	V1,90
			Institute of Gas Technology	Fluid Extraction - Biological Degradation Process	V2,58
			J.R. Simplot Co.	The SABRE™ Process	V1,66

APPLICABILITY INDEX (continued)

Media	Contaminants	Treatment Type	Technology Vendor	Technology	Volume, Page Number
Sludge (continued)	Herbicides (continued)	Materials Handling	U.S. EPA	Excavation Techniques and Foam Suppression methods	V1,166
		Physical Chemical Treatment - Biological Degradation	Lasagna™ Public - Private Partnership	Lasagna™ In Situ Soil Remediation	V1,202
		Physical/ Chemical Thermal Desorption	ELI Eco Logic Inc.	Gas-Phase Chemical Reduction Process	V1,68
			ELI Eco Logic International Inc.	Thermal Desorption Unit	V1,70
			Maxymillian Technologies, Inc.	Thermal Desorption System	V1,112
			OHM Remediation Services Corp.	X*TRAX™ Thermal Desorption	V1,136
			Recycling Sciences International, Inc.	Desorption and Vapor Extraction System	V1,220
			Smith Environmental Technologies Corp.	Low Temperature Thermal Aeration (LTTA3)	V1,148
			Roy F. Weston, Inc.	Low Temperature Thermal Treatment (LT3®)	V1,174
		Physical/ Chemical Treatment	ART International, Inc.	Low-Energy Extraction Process (LEEP)	V2,20
			CF Systems Corp.	Liquified Gas Solvent Extraction (LG-SC) Technology	V1,48
			High Voltage Environmental Applications, Inc.	High-Energy Electron Irradiation	V1,94
			Ionics RCC	B.E.S.T. Solvent Extraction Technology	V1,104
			IT Corp.	Mixed Waste Treatment Process	V2,68
			National Risk Management Research Laboratory	Base-Catalyzed Decomposition Process	V1,116
			National Risk Management Research Laboratory and IT Corp.	Debris Washing System	V1,122
		Portable Gas Chromatographs	Bruker Analytical Systems, Inc.	Mobile Environmental Monitor	V3,20
		Solidification/ Stabilization	Chemfix Technologies, Inc.	Solidification and Stabilization	V1,50
			WASTECH, Inc.	Solidification and Stabilization	V1,172
		Test Kits	Strategic Diagnostic, Inc. Corp.	RaPID Assay®	V3,72
		Thermal Destruction	BWX Technologies, Inc.	Cyclone Furnace	V1,44
			U. of Dayton Research Institute	Photothermal Detoxification Unit	V2,106

APPLICABILITY INDEX (continued)

Media	Contaminants	Treatment Type	Technology Vendor	Technology	Volume, Page Number
Sludge (continued)	Herbicides (continued)	Thermal Destruction (continued)	Vortec Corp.	Vitrification Process	V1,236
	Inorganics	Field Portable X-ray Fluorescence	HNU Systems, Inc.	HNU Source Excited Fluorescence Analyzer-Portable (SEFA-P)	V3,44
	Metals	Biological Degradation	Geo-Microbial Technologies, Inc.	Metals Release & Remove from Waste	V2,124
			Phytotech	Phytoremediation Technology	V1,212
			Pintail Systems, Inc.	Biomineralization of Metals	V2,130
			Pintail Systems, Inc.	Spent Ore Bioremediation Process	V1,214
		Field Portable X-ray Fluorescence	HNU Systems, Inc.	HNU Source Excited Fluorescence Analyzer-Portable (SEFA-P) X-Ray Fluorescence Analyzer	V3,44
			NITON Corp.	XL Spectrum Analyzer	V3,52
			TN Spectrace	9000 X-Ray Fluorescence Analyzer and Lead X-Ray Fluorescence Analyzer	V3,74
		Materials Handling	AEA Technology Envioronment	Soil Separation and Washing Process	V2,16
			Montana College of Mineral Science and Technology	Campbell Centrifugal Jig	V2,84
			United States Environmental Protection Agency	Excavation Techniques and Foam Suppression Methods	V1,166
			U. of South Carolina	In Situ Mitigation of Acid Water	V2,108
		Physical Chemical Treatment - Biological Degradation	Lasagna™ Public-Private Partnership	Lasagna™ In Situ Soil Remediation	V1,202
		Physical/ Chemical Thermal Desorption	New Jersey Institute of Technology	GHEA Associates Process	V2,86
		Physical/ Chemical Treatment	BioGenesis Enterprises, Inc.	BioGenesisSM Soil & Sediment Washing Process	V1,32
			Center for Hazardous Materials Research	Acid Extraction Treatment System	V2,30
			COGNIS, Inc.	TERRAMET Soil Remediation System	V1,52
			Dynaphore, Inc	FORAGER®Sponge	V1,62
			Electrokinetics, Inc.	Electrokinetic Soil Processing	V1,66
			General Atomics, Nuclear Remediation Technologies Division	Acoustic Barrier Particulate Separator	V2,48
		Physical/ Chemical Treatment	IT Corp.	Batch Steam Distillation and Metal Extraction	V2,64
			IT Corp.	Chelation/ Electrodeposition of Toxic Metals from Soils	V2,66
			IT Corp.	Mixed Waste Treatment Process	V2,68

APPLICABILITY INDEX (continued)

Media	Contaminants	Treatment Type	Technology Vendor	Technology	Volume, Page Number
Sludge (continued)	Metals (continued)	Physical/chemical Treatment (continued)	National Risk Management Research Laboratory and IT Corp.	Debris Washing System	V1,122
			Selentec Environmental Technologies, Inc.	Selentec MAG*SEP Technology	V1,226
			Toronto Harbour Commission	Soil Recycling	V1,162
		Solidification / Stabilization	Chemfix Technologies, Inc.	Solidification and Stabilization	V1,50
			Ferro Corp.	Waste Vitrification Through Electric Melting	V2,46
			Funderburk & Associates	Dechlorination and Immobilization	V1,78
			Geo-Con, Inc.	In Situ Solidification and Stabilization Process	V1,82
			Geosafe Corp.	GeoMelt Vitrification	V1,84
			Rocky Mountain Remediation Services, L.L.C.	Envirobond Solution	V1,222
			Sevenson Environmental Services, Inc.	MAECTITE® Chemical Treatment Process	V1,228
			Soliditech, Inc.	Solidification and Stabilization	V1,152
			Star Organics, L.L.C.	Soil Rescue Remediation Fluid	V1,232
			STC Remediation, A Division of Omega Environmental, Inc.	Organic Stabilization and Chemical Fixation/Solidification	V1,156
			WASTECH, Inc.	Solidification and Stabilization	V1,172
			Western Product Recovery Group, Inc.	Coordinate, Chemical Bonding, and Adsorption Treatment	V2,114
		Thermal Destruction	BWX Technologies, Inc.	Cyclone Furnace	V1,44
			Energy and Environmental Research Corp.	Hybrid Fluidized Bed System	V2,40
			Energy and Environmental Research Corp.	Reactor Filter System	V2,42
			Horsehead Resource Development Co., Inc.	Flame Reactor	V1,96
			Institute of Gas Technology	Fluidized-Bed/ Cyclonic Agglomerating Combustor	V2,60
			PSI Technologies, A Division of Physical Sciences Inc.	Metals Immobilization and Decontamination of Aggregate Solids	V2,88
			Vortec Corp.	Vitrification Process	V1,236
	PAHs	Biological Degradation	ECOVA Corp.	Bioslurry Reactor	V1,64
			Institute of Gas Technology	Fluid Extraction - Biological Degradation Process	V2,58
			Remediation Technologies, Inc.	Liquid and Solids Biological Treatment	V1,140

APPLICABILITY INDEX (continued)

Media	Contaminants	Treatment Type	Technology Vendor	Technology	Volume, Page Number
Sludge (continued)	PAHs (continued)	Physical/ Chemical Thermal Desorption	Maxymillian Technologies, Inc.	Thermal Desorption System	V1,112
			Recycling Sciences International, Inc.	Desorption and Vapor Extraction System	V1,220
		Physical/ Chemical Treatment	BioGenesis Enterprises, Inc.	BioGenesisSM Soil & Sediment Washing Process	V1,32
		Portable Gas Chromatographs	Bruker Analytical Systems, Inc.	Mobile Environmental Monitor	V3,20
	PCBs	Biological Degradation	Institute of Gas Technology	Chemical and Biological Treatment	V2,56
			Institute of Gas Technology	Fluid Extraction - Biological Degradation Process	V2,58
		Materials Handling	United States Environmental Protection Agency	Excavation Techniques and Foam Suppression Methods	V1,166
		Physical/ Chemical Thermal Desorption	Biotherm, LCC	Biotherm Process	V1,36
			ELI Eco Logic Inc.	Gas-Phase Chemical Reduction Process	V1,68
			ELI Eco Logic International Inc	Thermal Desorption Unit	V1,70
			KAI Technologies, Inc./ Brown and Root Environmental	Radio Frequency Heating	V1,106
			New Jersey Institute of Technology	GHEA Associates Process	V2,86
			OHM Remediation Services Corp.	X*TRAX™ Thermal Desorption	V1,136
			Recycling Sciences International, Inc.	Desorption and Vapor Extraction System	V1,220
			Roy F. Weston, Inc.	Low Temperature Thermal Treatment [LT3®] System	V1,174
		Physical/ Chemical Treatment	ART International, Inc.	Low-Energy Extraction Process [LEEP]	V2,20
			BioGenesis Enterprises, Inc.	BioGenesisSM Soil & Sediment Washing Process	V1,32
			CF Systems Corp.	Liquified Gas Solvent Extraction [LG-SX] Technology	V1,48
			Commodore Environmental Services, Inc.	Solvated Electron Remediation System	V1,56
			General Atomics	Circulating Bed Combustor	V1,80
			High Voltage Environmental Applications, Inc.	High Energy Electron Beam Irradiation	V2,54
			High Voltage Environmental Applications, Inc.	High-Energy Electron Irradiation	V1,94
			Ionics RCC	B.E.S.T. Solvent Extraction Technology	V1,104

APPLICABILITY INDEX (continued)

Media	Contaminants	Treatment Type	Technology Vendor	Technology	Volume, Page Number
Sludge (continued)	PCBs (continued)	Physical/Chemical Treatment (continued)	IT Corp.	Mixed Waste Treatment Process	V2,68
			National Risk Management Research Laboratory	Base-Catalyzed Decomposition Process	V1,116
			National Risk Management Research Laboratory and IT Corp.	Debris Washing System	V1,122
			State U. of New York at Oswego, Environmental Research Center	Electrochemical Peroxidation of PCB-Contaminated Sediments and Waters	V2,98
			Terra-Kleen Response Group, Inc.	Solvent Extraction Treatment System	V1,158
			Trinity Environmental Technologies, Inc.	PCB- and Organochlorine-Contaminated Soil Detoxification	V2,104
		Portable Gas Chromatographs	Bruker Analytical Systems, Inc.	Mobile Environmental Monitor	V3,20
			United States Environmental Protection Agency	Field Analytical Screening Program - PCB Method	V3,78
		Solidification/ Stabilization	Chemfix Technologies, Inc.	Solidification and Stabilization	V1,50
			Funderburk & Associates	Dechlorination and Immobilization	V1,78
			Geo-Con, Inc.	In Situ Solidification and Stabilization Process	V1,82
			Geosafe Corp.	GeoMelt Vitrification	V1,84
			Soliditech, Inc.	Solidification and Stabilization	V1,152
			WASTECH, Inc.	Solidification and Stabilization	V1,172
		Spectrometers	Graseby Ionics, Ltd., and PCP, Inc.	Ion Mobility Spectrometry	V3,36
		Test Kits	Strategic Diagnostic, Inc.	Ensys Penta Test System	V3,68
		Thermal Destruction	BWX Technologies, Inc.	Cyclone Furnace	V1,44
			Energy and Environmental Research Corp.	Hybrid Fluidized Bed System	V2,40
			Institute of Gas Technology	Fluidized-Bed/ Cyclonic Agglomerating Combustor	V2,60
			U. of Dayton Research Institute	Photothermal Detoxification Unit	V2,106
			Vortec Corp.	Vitrification Process	V1,236
	PCP	Biological Degradation	Remediation Technologies, Inc.	Liquid and Solids Biological Treatment	V1,140
		Physical/ Chemical Thermal Desorption	Recycling Sciences International Inc.	Desorption and Vapor Extraction System	V1,220
		Physical/ Chemical Treatment	Trinity Environmental Technologies, Inc.	PCB- and Organochlorine-Contaminated Soil Detoxification	V2,104
		Test Kits	Strategic Diagnostic, Inc.	Ensys Penta Test System	V3,68

APPLICABILITY INDEX (continued)

Media	Contaminants	Treatment Type	Technology Vendor	Technology	Volume, Page Number
Sludge (continued)	PCP (continued)	Test Kits (continued)	Strategic Diagnostic, Inc. Corp.	RaPID Assay®	V3,72
	Pesticides	Biological Degradation	Electrokinetics, Inc.	In Situ Bioremediation By Electrokinetic Injection	V2,120
			GRACE Bioremediation Technologies.	DARAMEND™ Bioremediation Technology	V1,90
			Institute of Gas Technology	Chemical and Biological Treatment	V2,56
			Institute of Gas Technology	Fluid Extraction - Biological Degradation Process	V2,58
		Materials Handling	United States Environmental Protection Agency	Excavation Techniques and Foam Suppression Methods	V1,166
		Physical/ Chemical Thermal Desorption	Biotherm, LCC	Biotherm Process	V1,36
			ELI Eco Logic Inc.	Gas-Phase Chemical Reduction Process	V1,68
			ELI Eco Logic International Inc	Thermal Desorption Unit	V1,70
			KAI Technologies, Inc./Brown and Root Environmental	Radio Frequency Heating	V1,106
			OHM Remediation Services Corp.	X*TRAX™ Thermal Desorption	V1,136
			Recycling Sciences International, Inc.	Desorption and Vapor Extraction System	V1,220
			Smith Environmental Technologies Corp.	Low Temperature Thermal Aeration [LTTA®]	V1,148
			Roy F. Weston, Inc.	Low Temperature Thermal Treatment [LT3®] System	V1,174
		Physical/ Chemical Treatment	ART International, Inc.	Low-Energy Extraction Process [LEEP]	V2,20
			CF Systems Corp.	Liquified Gas Solvent Extraction [LG-SX] Technology	V1,48
			Commodore Environmental Services, Inc.	Solvated Electron Remediation System	V1,56
			Electrokinetics, Inc.	Electrokinetic Soil Processing	V1,66
			General Atomics	Circulating Bed Combustor	V1,80
			High Voltage Environmental Applications, Inc.	High Energy Electron Beam Irradiation	V2,54
			High Voltage Environmental Applications, Inc.	High Energy Electron Irradiation	V1,94
			Ionics RCC	B.E.S.T. Solvent Extraction Technology	V1,104
			IT Corp.	Mixed Waste Treatment Process	V2,68

APPLICABILITY INDEX (continued)

Media	Contaminants	Treatment Type	Technology Vendor	Technology	Volume, Page Number
Sludge (continued)	Pesticides (continued)	Physical/ Chemical Treatment (continued)	National Risk Management Research Laboratory	Base-Catalyzed Decomposition Process	V1,116
			National Risk Management Research Laboratory and IT Corp.	Debris Washing System	V1,122
			State U. of New York at Oswego, Environmental Research Center	Electrochemical Peroxidation of PCB-Contaminated Sediments and Waters	V2,98
			Terra-Kleen Response Group, Inc.	Solvent Extraction Treatment System	V1,158
			Trinity Environmental Technologies, Inc.	PCB- and Organochlorine-Contaminated Soil Detoxification	V2,104
		Portable Gas Chromatographs	Bruker Analytical Systems, Inc.	Mobile Environmental Monitor	V3,20
			United States Environmental Protection Agency	Field Analytical Screening Program - PCB Method	V3,78
		Solidification/ Stabilization	Chemfix Technologies, Inc.	Solidification & Stabilization	V1,50
			Funderburk & Associates	Dechlorination and Immobilization	V1,78
			Geo-Con, Inc.	In Situ Solidification and Stabilization Process	V1,82
			Geosafe Corp.	GeoMelt Vitrification	V1,84
			Soliditech, Inc.	Solidification & Stabilization	V1,152
			WASTECH, Inc.	Solidification & Stabilization	V1,172
		Spectrometers	Graseby Ionics, Ltd. and PCP, Inc.	Ion Mobility Spectrometry	V3,36
		Test Kits	Strategic Diagnostic, Inc.	Ensys Penta Test System	V3,68
		Thermal Destruction	BWX Technologies, Inc.	Cyclone Furnace	V1,44
			Energy and Environmental Research Corp.	Hybrid Fluidized Bed System	V2,40
			Institute of Gas Technology	Fluidized-Bed/ Cyclonic Agglomerating Combustor	V2,60
			U. of Dayton Research Institute	Photothermal Detoxification Unit	V2,106
			Vortec Corp.	Vitrification Process	V1,236
	PCP	Biological Degradation	Remediation Technologies, Inc.	Liquid and Solids Biological Treatment	V1,140
		Physical/ Chemical Thermal Desorption	Recycling Sciences International Inc	Desorption and Vapor Extraction System	V1,220
		Physical/ Chemical Treatment	Trinity Environmental Technologies, Inc.	PCB- and Organochlorine-Contaminated Soil Detoxification	V2,104
		Test Kits	Strategic Diagnostic, Inc.	Ensys Penta Test System	V3,68

APPLICABILITY INDEX (continued)

Media	Contaminants	Treatment Type	Technology Vendor	Technology	Volume, Page Number
Sludge (continued)	PCP (continued)	Test Kits (continued)	Strategic Diagnostic, Inc. Corp.	RaPID Assay®	V3,72
	Pesticides	Biological Degradation	Electrokinetics, Inc.	In Situ Bioremediation By Electrokinetic Injection	V2,120
			GRACE Bioremediation Technologies	DARAMEND™ Bioremediation Technology	V1,90
			Institute of Gas Technology	Chemical and Biological Treatment	V2,56
			Institute of Gas Technology	Fluid Extraction - Biological Degradation Process	V2,58
		Materials Handling	United States Environmental Protection Agency	Excavation Techniques and Foam Suppression Methods	V1,166
		Physical/ Chemical Thermal Desorption	Biotherm, LCC	Biotherm Process	V1,36
			ELI Eco Logic Inc.	Gas-Phase Chemical Reduction Process	V1,68
			ELI Eco Logic International Inc.	Thermal Desorption Unit	V1,70
			KAI Technologies, Inc./Brown and Root Environmental	Radio Frequency Heating	V1,106
			OHM Remediation Services Corp.	X*TRAX™ Thermal Desorption	V1,136
			Recycling Sciences International, Inc.	Desorption and Vapor Extraction System	V1,220
			Smith Environmental Technologies Corp.	Low Temperature Thermal Aeration [LTTA®]	V1,148
			Roy F. Weston, Inc.	Low Temperature Thermal Treatment [LT3®] System	V1,174
		Physical/ Chemical Treatment	ART International, Inc.	Low-Energy Extraction Process [LEEP]	V2,20
			CF Systems Corp.	Liquified Gas Solvent Extraction [LG-SX] Technology	V1,48
			Commodore Environmental Services, Inc.	Solvated Electron Remediation System	V1,56
			Electrokinetics, Inc.	Electrokinetic Soil Processing	V1,66
			General Atomics	Circulating Bed Combustor	V1,80
			High Voltage Environmental Applications, Inc.	High Energy Electron Beam Irradiation	V2,54
			High Voltage Environmental Applications, Inc.	High Energy Electron Irradiation	V1,94
			Ionics RCC	B.E.S.T. Solvent Extraction Technology	V1,104
			IT Corp.	Mixed Waste Treatment Process	V2,68

APPLICABILITY INDEX (continued)

Media	Contaminants	Treatment Type	Technology Vendor	Technology	Volume, Page Number
Sludge (continued)	Pesticides (continued)	Physical/ Chemical Treatment (continued)	National Risk Management Research Laboratory	Base-Catalyzed Decomposition Process	V1,116
			National Risk Management Research Laboratory and IT Corp.	Debris Washing System	V1,122
			State U. of New York at Oswego, Environmental Research Center	Electrochemical Peroxidation of PCB-Contaminated Sediments and Waters	V2,98
			Terra-Kleen Response Group, Inc.	Solvent Extraction Treatment System	V1,158
			Trinity Environmental Technologies, Inc.	PCB- and Organochlorine-Contaminated Soil Detoxification	V2,104
		Portable Gas Chromatographs	Bruker Analytical Systems, Inc.	Mobile Environmental Monitor	V3,20
			United States Environmental Protection Agency	Field Analytical Screening Program - PCB Method	V3,78
		Solidification/ Stabilization	Chemfix Technologies, Inc.	Solidification/ Stabilization	V1,50
			Funderburk & Associates	Dechlorination and Immobilization	V1,78
			Geo-Con, Inc.	In Situ Solidification and Stabilization Process	V1,82
			Geosafe Corp.	GeoMelt Vitrification	V1,84
			Soliditech, Inc.	Solidification/ Stabilization	V1,152
			WASTECH, Inc.	Solidification/ Stabilization	V1,172
		Spectrometers	Graseby Ionics, Ltd., and PCP, Inc.	Ion Mobility Spectrometry	V3,36
		Test Kits	Strategic Diagnostic, Inc.	Ensys Penta Test System	V3,68
			Strategic Diagnostic, Inc. Corp.	RaPID Assay®	V3,72
		Thermal Destruction	BWX Technologies, Inc.	Cyclone Furnace	V1,44
			Energy & Environmental Research Corp.	Hybrid Fluidized Bed System	V2,42
			Institute of Gas Technology	Fluidized-Bed/ Cyclonic Agglomerating Combustor	V2,60
			U. of Dayton Research Institute	Photothermal Detoxification Unit	V2,106
			Vortec Corp.	Vitrification Process	V1,236
	Petroleum Hydrocarbons	Biological Degradation	ECOVA Corp.	Bioslurry Reactor	V1,64
			Remediation Technologies, Inc.	Liquid and Solids Biological Treatment	V1,140
		Physical/ Chemical Thermal Desorption	New Jersey Institute of Technology	GHEA Associates Process	V2,86
			Smith Environmental Technologies Corp.	Low Temperature Thermal Aeration [LTTA®]	V1,148

APPLICABILITY INDEX (continued)

Media	Contaminants	Treatment Type	Technology Vendor	Technology	Volume, Page Number
Sludge (continued)	Petroleum Hydrocarbons (continued)	Solidification/ Stabilization	Soliditech, Inc.	Solidification/ Stabilization	V1,152
	Radio nuclides	Materials Handling	Thermo Nutech, Inc.	Segmented Gate System	V2,134
		Physical/ Chemical Treatment	IT Corp.	Mixed Waste Treatment Process	V2,68
			Selentec Environmental Technologies, Inc.	Selentec MAG*SEP Technology	V1,226
		Solidification/ Stabilization	Sevenson Environmental Services, Inc.	MAECTITE® Chemical Treatment Process	V1,228
			WASTECH, Inc.	Solidification/ Stabilization	V1,172
		Thermal Destruction	BWX Technologies, Inc.	Cyclone Furnace	V1,44
	SVOCs	Biological Degradation	ECOVA Corp.	Bioslurry Reactor	V1,64
			GRACE Bioremediation Technologies.	DARAMEND™ Bioremediation Technology	V1,90
			Institute of Gas Technology	Chemical and Biological Treatment	V2,56
			Institute of Gas Technology	Fluid Extraction - Biological Degradation Process	V2,58
			IT Corp.	Tekno Associates Bioslurry Reactor	V2,72
			New York State Dept. of Environmental Conservation/ ENSR Consulting and Larsen Engineers	EX Situ Biovault	V1,126
			New York State Dept. of Environmental Conservation/ R.E. Wright Environmental, Inc.	In Situ Bioventing Treatment System	V1,130
			IT Corp.	Oxygen Microbubble In Situ Bioremediation	V2,126
			Remediation Technologies, Inc.	Liquid and Solids Biological Treatment	V1,140
		Materials Handling	United States Environmental Protection Agency	Excavation Techniques and Foam Suppression Methods	V1,166
		Physical/ Chemical Thermal Desorption	Biotherm, LCC	Biotherm Process	V1,36
			ELI Eco Logic Inc.	Gas-Phase Chemical Reduction Process	V1,68
			ELI Eco Logic International Inc.	Thermal Desorption Unit	V1,70
			KAI Technologies, Inc./Brown and Root Environmental	Radio Frequency Heating	V1,106
			Maxymillian Technologies, Inc.	Thermal Desorption System	V1,112
			New Jersey Institute of Technology	GHEA Associates Process	V2,86

APPLICABILITY INDEX (continued)

Media	Contaminants	Treatment Type	Technology Vendor	Technology	Volume, Page Number
Sludge (continued)	SVOCs (continued)	Physical/ Chemical Thermal Desorption (continued)	NOVATERRA, Inc.	In-Situ Soil Treatments [Steam/Air Stripping]	V1,134
			OHM Remediation Services Corp.	X*TRAX™ Thermal Desorption	V1,136
			Recycling Sciences International, Inc.	Desorption and Vapor Extraction System	V1,220
			Smith Environmental Technologies Corp.	Low Temperature Thermal Aeration [LTTA®]	V1,148
			Roy F. Weston, Inc.	Low Temperature Thermal Treatment [LT3®] System	V1,174
		Physical/ Chemical Treatment	CF Systems Corp.	Liquified Gas Solvent Extraction [LG-SX] Technology	V1,48
			Electrokinetics, Inc.	Electrokinetic Soil Processing	V1,66
			High Voltage Environmental Applications, Inc.	High Energy Electron Beam Irradiation	V2,54
			High Voltage Environmental Applications, Inc.	High-Energy Electron Irradiation	V1,94
			Ionics RCC	B.E.S.T. Solvent Extraction Technology	V1,104
			IT Corp.	Mixed Waste Treatment Process	V2,68
			National Risk Management Research Laboratory	Base-Catalyzed Decomposition Process	V1,116
			National Risk Management Research Laboratory and IT Corp.	Debris Washing System	V1,122
			Terra-Kleen Response Group, Inc.	Solvent Extraction Treatment System	V1,158
			Terra Vac, Inc.	In Situ and Ex Situ Vacuum Extraction	V1,160
			Toronto Harbour Commission	Soil Recycling	V1,162
		Portable Gas Chromatographs	Bruker Analytical Systems, Inc.	Mobile Environmental Monitor	V3,20
			United States Environmental Protection Agency	Field Analytical Screening Program - PCB Method	V3,78
		Solidification/ Stabilization	Chemfix Technologies, Inc.	Solidification/ Stabilization	V1,50
			Geo-Con, Inc.	In Situ Solidification and Stabilization Process	V1,82
			STC Remediation, A Division of Omega Environmental, Inc.	Organic Stabilization and Chemical Fixation/Solidification	V1,156
			WASTECH, Inc.	Solidification/ Stabilization	V1,172
			Western Product Recovery Group, Inc.	Coordinate, Chemical Bonding, and Adsorption Treatment	V2,114

APPLICABILITY INDEX (continued)

Media	Contaminants	Treatment Type	Technology Vendor	Technology	Volume, Page Number
Sludge (continued)	SVOCs (continued)	Spectrometers	Graseby Ionics, Ltd., and PCP, Inc.	Ion Mobility Spectrometry	V3,36
		Test Kits	Strategic Diagnostic, Inc. Corp.	RaPID Assay®	V3,72
		Thermal Desorption	BWX Technologies, Inc.	Cyclone Furnace	V1,44
			Institute of Gas Technology	Fluidized-Bed/ Cyclonic Agglomerating Combustor	V2,60
			Sonotech, Inc.	Frequency-Tunable Pulse Combustion System	V1,154
			Texaco, Inc.	Texaco Gasification Process	V1,162
			U. of Dayton Research Institute	Photothermal Detoxification Unit	V2,106
			Vortec Corp.	Vitrification Process	V1,236
	VOCs	Biological Degradation	Bio-Rem, Inc.	Augmented In Situ Subsurface Bioremediation Process	V1,34
			ECOVA Corp.	Bioslurry Reactor	V1,64
			Electrokinetics, Inc.	In Situ Bioremediation By Electrokinetic Injection	V2,120
			New York State Dept. of Environmental Conservation/ ENSR Consulting and Larsen Engineers	Ex Situ Biovault	V1,126
			New York State Dept. of Environmental Conservation/ R.E. Wright Environmental, Inc.	In Situ Bioventing Treatment System	V1,130
			IT Corp.	Oxygen Microbubble In Situ Bioremediation	V2,126
		Materials Handling	AEA Technology Environment	Soil Separation and Washing Process	V2,16
			United States Environmental Protection Agency	Excavation Techniques and Foam Suppression Methods	V1,166
		Physical/ Chemical Thermal Desorption	Biotherm, LCC	Biotherm Process	V1,36
			KAI Technologies, Inc./Brown and Root Environmental	Radio Frequency Heating	V1,106
			Maxymillian Technologies, Inc.	Thermal Desorption System	V1,112
			New Jersey Institute of Technology	GHEA Associates Process	V2,86
			NOVATERRA, Inc.	In-Situ Soil Treatments (Steam/Air Stripping)	V1,134
			Recycling Sciences International, Inc.	Desorption and Vapor Extraction System	V1,220
			Smith Environmental Technologies Corp.	Low Temperature Thermal Aeration [LTTA®]	V1,148

APPLICABILITY INDEX (continued)

Media	Contaminants	Treatment Type	Technology Vendor	Technology	Volume, Page Number
Sludge (continued)	VOCs (continued)	Physical/ Chemical Thermal Desorption (continued)	Roy F. Weston, Inc.	Low Temperature Thermal Treatment [LT3®] System	V1,174
		Physical/ Chemical Treatment	CF Systems Corp.	Liquified Gas Solvent Extraction [LG-SX] Technology	V1,48
			High Voltage Environmental Applications, Inc.	High-Energy Electron Irradiation	V1,94
			Institute of Gas Technology	Supercritical Extraction/Liquid Phase Oxidation	V2,62
			Ionics RCC	B.E.S.T. Solvent Extraction Technology	V1,104
			IT Corp.	Batch Steam Distillation and Metal Extraction	V2,64
			IT Corp.	Mixed Waste Treatment Process	V2,68
			Terra-Kleen Response Group, Inc.	Solvent Extraction Treatment System	V1,158
			Terra Vac, Inc.	In Situ and Ex Situ Vacuum Extraction	V1,160
		Portable Gas Chromatographs	Bruker Analytical Systems, Inc.	Mobile Environmental Monitor	V3,20
			United States Environmental Protection Agency	Field Analytical Screening Program - PCB Method	V3,78
		Solidification/ Stabilization	Geo-Con, Inc.	In Situ Solidification and Stabilization Process	V1,82
			WASTECH, Inc.	Solidification/ Stabilization	V1,172
			Western Product Recovery Group, Inc.	Coordinate, Chemical Bonding, and Adsorption Treatment	V2,114
		Spectrometers	Graseby Ionics, Ltd., and PCP, Inc.	Ion Mobility Spectrometry	V3,36
		Test Kits	Strategic Diagnostic, Inc. Corp.	RaPID Assay®	V3,72
		Thermal Destruction	Energy and Environmental Research Corp.	Hybrid Fluidized Bed System	V2,40
			Institute of Gas Technology	Fluidized-Bed/ Cyclonic Agglomerating Combustor	V2,60
			Sonotech, Inc.	Frequency-Tunable Pulse Combustion System	V1,154
			Texaco, Inc.	Texaco Gasification Process	V1,162
			Vortec Corp.	Vitrification Process	V1,236
	Other	Solidification/ Stabilization	STC Remediation, A Division of Omega Environmental, Inc.	Organic Stabilization and Chemical Fixation/Solidification	V1,156
Soil	Aromatic VOCs	Biological Degradation	Billings and Associates, Inc.	Subsurface Volatilization and Ventilation System (SVVS)	V1,30

APPLICABILITY INDEX (continued)

Media	Contaminants	Treatment Type	Technology Vendor	Technology	Volume, Page Number
Soil (continued)	Aromatic VOCs (continued)	Biological Degradation (continued)	Bio-Rem, Inc.	Augmented In Situ Subsurface Bioremediation Process	V1,34
			Electrokinetics, Inc.	In Situ Bioremediation by Electrokinetic Injection	V2,120
			GRACE Bioremediation Technologies	DARAMEND™ Bioremediation Technology	V1,90
			Harding Lawson Associates	Two Zone, Plume Interception. In Situ Treatment Technology	V2,48
			Hazardous Substance Management Research Center at New Jersey Institute of Technology, and Rutgers, the State U. of New Jersey	Pneumatic Fracturing and Bioremediation Process	V2,52
			Institute of Gas Technology	Fluid Extraction - Biological Degradation Process	V2,58
			National Risk Management Research Laboratory	Bioventing	V1,208
			New York State Dept. of Environment Conservation/ENSR Consulting and Larson Engineers	Ex Situ Biovault	V1,126
			New York State Dept. of Environmental Conservation/R.E. Wright Environmental, Inc.	In Situ Bioventing Treatment System	V1,130
			IT Corp.	Oxygen Microbubble In Situ Bioremediation	V2,126
		Contaminant Survey Systems	W.L. Gore and Associates, Inc.	GORE-SORBER Screening Survey	V3,82
		Materials Handling	National Risk Management Research Laboratory. The U. of Cincinnati and FRX, Inc.	Hydraulic Fracturing	V1,124
			U.S. EPA	Excavation Techniques and Foam Suppression Methods	V1,166
		Physical/ Chemical Thermal Desorption	Biotherm, LCC	Biotherm Process	V1,36
			Hughes Environmental Systems, Inc.	Steam Enhanced Recovery Process	V1,100
			Maxymillian Technologies, Inc.	Thermal Desorption System	V1,112
			NOVATERRA, Inc.	In-Situ Soil Treatments, (Steam/Air Stripping)	V1,134
			Recycling Sciences International, Inc.	Desorption and Vapor Extraction System	V1,220
			SoilTech ATP Systems, Inc.	Anaerobic Thermal Processor	V1,150

APPLICABILITY INDEX (continued)

Media	Contaminants	Treatment Type	Technology Vendor	Technology	Volume, Page Number
Soil (continued)	Aromatic VOCs (continued)	Physical/ Chemical Thermal Desorption (continued)	Roy F. Weston, Inc.	Low Temperature Thermal Treatment (LT3™) System	V1,174
		Physical/ Chemical Treatment	Arctic Foundations, Inc.	Cryogenic Barrier	V1,190
			ARS Technologies, Inc.	Pneumatic Fracturing Extraction™ and Catalytic Oxidation	V1,24
			Bergmann, A Division of Linatex, Inc.	Soil and Sediment Washing	V1,26
			CF Systems Corp.	Liquified Gas Solvent Extraction (LG-SX) Technology	V1,48
			Electrokinetics, Inc.	Electrokinetic Soil Processing	V1,66
			Energia, Inc.	Reductive Thermal and Photo-Thermal Oxidation for Enhanced Conversion of Chlorocarbons	V2,122
			High Voltage Environmental Applications, Inc.	High-Energy Electron Irradiation	V1,94
			Institute of Gas Technology	Supercritical Extraction/Liquid Phase Oxidation	V2,62
			Ionics RCC	B.E.S.T. Solvent Extraction Technology	V1,104
			IT Corp.	Mixed Waste Treatment Process	V2,68
			KSE, Inc.	Adsorption-Integrated-Reaction Process	V1,200/ V2,24
			Pulse Sciences, Inc.	X-Ray Treatment of Organically Contaminated Soils	V2,132
			Terra Vac, Inc.	In Situ and Ex Situ Vacuum Extraction	V1,160
			Roy F. Weston, Inc./IEG Technologies	UVB - Vacuum Vaporizing Well	V1,176
			Xerox Corp.	2-PHASE™ EXTRACTION Process	V1,180
		Portable Gas Chromatographs	Bruker Analytical Systems, Inc.	Mobile Environmental Monitor	V3,20
			HNU Systems, Inc.	HNU GC 311D Portable Gas Chromatograph	V3,42
			Photovac Monitoring Instruments	PE Photovac Voyager Portable Gas Chromatograph	V3,56
			SRI Instruments	Compact Gas Chromatograph	V3,66
			U.S. EPA	Field Analytical Screening Program - PCB Method	V3,78
		Samplers	Geoprobe Systems	Large Bore Soil Sampler	V3,34
		Sensors	Fugro Geosciences, Inc.	Rapid Optical Screening Tool	V3,30
		Solidification/ Stabilization	Geo Con. Inc.	In Situ Solidification and Stabilization Process	V1,82
			WASTECH, Inc.	Solidification and Stabilization	V1,172
			Western Product Recovery Group, Inc.	Coordinate, Chemical Bonding, and Adsorption Treatment	V2,114

APPLICABILITY INDEX (continued)

Media	Contaminants	Treatment Type	Technology Vendor	Technology	Volume, Page Number
Soil (continued)	Aromatic VOCs (continued)	Spectrometers	Graseby Ionics, Ltd., and PCP, Inc.	Ion Mobility Spectrometry	V3,36
		Test Kits	Hanby Environmental Laboratory Procedures, Inc.	Test Kits for Organic Contaminants in Soil and Water	V3,38
		Thermal Destruction	Sonotech, Inc.	Frequency Tunable Pulse Combustion System	V1,154
			Texaco, Inc.	Texaco Gasification Process	V1,162
			U. of Dayton Research Institute	Photothermal Detoxification Unit	V2,106
			Vortec Corp.	Vitrification Process	V1,236
	Cyanide	Biological Degradation	Pintail Systems, Inc.	Spent Ore Bioremediation Process	V1,214
		Physical/ Chemical Treatment	Arctic Foundations, Inc.	Cryogenic Barrier	V1,190
	Diesel	Materials Handling	National Risk Management Research Laboratory, The U. of Cincinnati, and FRX, Inc.	Hydraulic Fracturing	V1,124
		Physical/ Chemical Treatment	Arctic Foundations, Inc.	Cryogenic Barrier	V1,190
			Geokinetics International, Inc.	Electroheat-Enhanced Nonaqueous-Phase Liquids Removal	V1,196
			SIVE Services	Steam Injection and Vacuum Extraction	V1,230
	Dioxins	Biological Degradation	Biotrol®	Soil Washing System	V1,40
			Institute of Gas Technology	Fluid Extraction - Biological Degradation Process	V2,58
		Materials Handling	U.S. EPA	Excavation Techniques and Foam Suppression Methods	V1,166
		Physical/ Chemical Thermal Desorption	ELI Eco Logic Inc.	Gas-Phase Chemical Reduction Process	V1,68
			ELI Eco Logic International Inc.	Thermal Desorption Unit	V1,70
			Recycling Sciences International, Inc.	Desorption and Vapor Extraction System	V1,220
			SoilTech ATP Systems, Inc.	Anaerobic Thermal Processor	V1,150
			Roy F. Weston, Inc.	Low Temperature Thermal Treatment (LT3™) System	V1,174
		Physical/ Chemical Treatment	Arctic Foundations, Inc.	Cryogenic Barrier	V1,190
			ART International, Inc.	Low-Energy Extraction Process (LEEP)	V2,20
			CF Systems Corp.	Liquified Gas Solvent Extraction (LG SX) Technology	V1,48
			High Voltage Environmental Applications, Inc.	High-Energy Electron Irradiation	V1,94

APPLICABILITY INDEX (continued)

Media	Contaminants	Treatment Type	Technology Vendor	Technology	Volume, Page Number
Soil (continued)	Dioxins (continued)	Physical/ Chemical Treatment (continued)	Ionics RCC	B.E.S.T. Solvent Extraction Technology	V1,104
			IT Corp.	Mixed Waste Treatment Process	V2,68
			National Risk Management Research Laboratory	Base-Catalyzed Decomposition Process	V1,116
			Terra-Kleen Response Group, Inc.	Solvent Extraction Treatment System	V1,158
			Trinity Environmental Technologies, Inc.	PCB- and Organochlorine-Contaminated Soil Detoxification	V2,104
		Portable Gas Chromatographs	Bruker Analytical Systems, Inc.	Mobile Environmental Monitor	V3,20
		Samplers	Geoprobe Systems	Large Bore Soil Sampler	V3,34
		Solidification/ Stabilization	Geosafe Corp.	GeoMelt Vitrification	V1,84
			WASTECH, Inc.	Solidification and Stabilization	V1,172
		Spectrometers	Graseby Ionics, Ltd., and PCP, Inc.	Ion Mobility Spectrometry	V3,36
		Thermal Destruction	BWX Technologies, Inc.	Cyclone Furnace	V1,44
			Energy and Environmental Research Corp.	Reactor Filter System	V2,42
			Institute of Gag Technology	Fluidized-Bed/Cyclonic Agglomerating Combustor	V2,60
			U. of Dayton Research Institute	Photothermal Detoxification Unit	V2,106
			Vortec Corp.	Oxidation and Verification Process	V1,236
	Explosives	Biological Degradation	J.R. Simplot Company	The SABRE™ Process	V1,66
		Contaminant Survey Systems	Quadrel Services, Inc.	Emflux Soil-Gas Survey System	V3,54
			W.L. Gore and Associates, Inc.	GORE-SORBER Screening Survey	V3,82
		Physical/ Chemical Thermal Desorption	New Jersey Institute of Technology	GHEA Associates Process	V2,86
	Furans	Biological Degradation	Biotrol®	Soil Washing System	V1,40
			Institute of Gas Technology	Fluid Extraction - Biological Degradation Process	V2,58
		Materials Handling	U.S. EPA	Field Analytical Screening Program - PCB Method	V3,78
		Physical/ Chemical Thermal Desorption	ELI Eco Logic Inc.	Gas-Phase Chemical Reduction Process	V1,68
			ELI Eco Logic International, Inc.	Thermal Desorption Unit	V1,70
			Recycling Sciences International, Inc.	Desorption and Vapor Extraction System	V1,220
			SoilTech ATP Systems, Inc.	Anaerobic Thermal Processors	V1,150
			Roy F. Weston, Inc.	Low Temperature Thermal Treatment (LT3™) System	V1,174

APPLICABILITY INDEX (continued)

Media	Contaminants	Treatment Type	Technology Vendor	Technology	Volume, Page Number
Soil (continued)	Furans (continued)	Physical/ Chemical Treatment	Arctic Foundations, Inc.	Cryogenic Barrier	V1,190
			ART International, Inc.	Low-Energy Extraction Process (LEEP)	V2,20
			CF Systems Corp.	Liquified Gas Solvent Extraction (LG-SX) Technology	V1,48
			High Voltage Environmental Applications, Inc.	High-Energy Electron Irradiation	V1,94
			Ionics RCC	B.E.S.T. Solvent Extraction Technology	V1,104
			IT Corp.	Mixed Waste Treatment Process	V2,68
			National Risk Management Research Laboratory	Base, Catalyzed Decomposition Process	
			Terra-Kleen Response Group, Inc.	Solvent Extraction Treatment System	V1,158
			Trinity Environmental Technologies, Inc.	PCB- and Organochlorine-Contaminated Soil Detoxification	V2,104
		Portable Gas Chromatographs	Bruker Analytical Systems, Inc.	Mobile Environmental Monitor	V3,20
		Samplers	Geoprobe Systems	Large Bore Soil Sampler	V3,34
		Solidification/ Stabilization	Geosafe Corp.	GeoMelt Vitrification	V1,84
			WASTECH, Inc.	Solidification and Stabilization	V1,172
		Spectrometers	Graseby Ionics, Ltd., and PCP, Inc.	Ion Mobility Spectrometry	V3,36
		Thermal Destruction	BWX Technologies, Inc.	Cyclone Furnace	V1,44
			Energy and Environmental Research Corp.	Reactor Filter System	V2,42
			Institute of Gas Technology	Fluidized-Bed/Cyclonic Agglomerating Combustor	V2,60
			U. of Dayton Research Institute	Photothermal Detoxification Unit	V2,106
			Vortec Corp.	Vitrification Process	V1,236
	Gasoline	Contaminant Survey Systems	W.L. Gore and Associates, Inc.	GORE-SORBER Screening Survey	V3,82
		Materials Handling	National Risk Management Research Laboratory, The U. of Cincinnati, and FRX, Inc.	Hydraulic Fracturing	V1,124
		Physical/Chemical Thermal Desorption	SIVE Services	Steam Injection and Vacuum Extraction	V1,230
		Physical/ Chemical Treatment	Arctic Foundations, Inc.	Cryogenic Barrier	V1,190
		Samplers	Geoprobe Systems	Large Bore Soil Sampler	V3,34
	Halogenated VOCs	Biological Degradation	Harding Lawson Associates	Two Zone, Plume Interception. In Situ Treatment Technology	V2,48

APPLICABILITY INDEX (continued)

Media	Contaminants	Treatment Type	Technology Vendor	Technology	Volume, Page Number
Soil (continued)	Halogenated VOCs (continued)	Biological Degradation (continued)	Bio-Rem, Inc.	Augmented In Situ Subsurface Bioremediation Process	V1,34
			New York State Dept. of Environmental Conservation/R.E. Wright Environmental, Inc.	In Situ Bioventing Treatment System	V1,130
			IT Corp.	Oxygen Microbubble In Situ Bioremediation	V2,126
		Contaminant Survey Systems	W.L. Gore and Associates, Inc.	GORE-SORBER Screening Survey	V3,82
		Materials Handling	National Risk Management Research Laboratory. The U. of Cincinnati and FRX, Inc.	Hydraulic Fracturing	V1,124
			U.S. EPA	Excavation Techniques and Foam Suppression Methods	V1,166
		Physical/Chemical Treatment - Biological Degradation	Lasagna™ Public Private Partnership	Lasagna™ In Situ Soil Remediation	V1,202
		Physical/ Chemical Thermal Desorption	Hughes Environmental Systems, Inc.	Steam Enhanced Recovery Process	V1,100
			KAI Technologies, Inc./Brown and Root Environmental	Radio Frequency Heating	V1,106
			New Jersey Institute of Technology	GHEA Associates Process	V2,86
			NOVATERRA, Inc.	In-Situ Soil Treatments, (Steam/Air Stripping)	V1,134
			OHM Remediation Services Corp.	X*TAX™ Thermal Desorption	V1,136
			Recycling Sciences International, Inc.	Desorption and Vapor Extraction System	V1,220
			SoilTech ATP Systems, Inc.	Anaerobic Thermal Processor	V1,150
			Roy F. Weston, Inc.	Low Temperature Thermal Treatment (LT3™) System	V1,174
			Xerox Corp.	2-PHASE™ EXTRACTION Process	V1,180
		Physical/ Chemical Treatment	Arctic Foundations, Inc.	Cryogenic Barrier	V1,190
		Portable Gas Chromatographs	Bruker Analytical Systems, Inc.	Mobile Environmental Monitor	V3,20
			Photovac Monitoring Instruments	PE Photovac Voyager Portable Gas Chromatograph	V3,56
			SRI Instruments	Compact Gas Chromatograph	V3,66
			U.S. EPA	Field Analytical Screening Program - PCB Method	V3,78
		Samplers	Geoprobe Systems	Large Bore Soil Sampler	V3,34

APPLICABILITY INDEX (continued)

Media	Contaminants	Treatment Type	Technology Vendor	Technology	Volume, Page Number
Soil (continued)	Halogenated VOCs (continued)	Solidification/ Stabilization	Geo Con, Inc.	In Situ Solidification and Stabilization Process	V1,82
			Geosafe Corp.	GeoMelt Vitrification	V1,84
			WASTECH, Inc.	Solidification and Stabilization	V1,172
		Spectrometers	Graseby Ionics, Ltd., and PCP, Inc.	Ion Mobility Spectrometry	V3,36
		Test Kits	Dexsil Corp.	Environmental Test Kits	V3,26
		Thermal Destruction	Energy and Environmental Research Corp.	Hybrid Fluidized Bed System	V2,40
			Svedala Industries, Inc.	PYROKILN THERMAL ENCAPSULATION Process	V2,100
			Texaco Inc.	Texaco Gasification Process	V1,162
			U. of Dayton Research Institute	Photothermal Detoxification Unit	V2,106
			Vortec Corp.	Vitrification Process	V1,236
	Heavy Metals	Field Portable X-ray Fluorescence	C-THRU Technologies Corporation	Metal Analysis Probe (MAP®) Portable Assays	V3,22
		Solidification/Stabilization	Rocky Mountain Remediation Services, L.L.C.	Envirobond Solution	V1,222
			Star Organics, L.L.C.	Soil Rescue Remediation Fluid	V1,232
	Heavy Minerals	Materials Handling	Montana College of Mineral Science and Technology	Campbell Centrifugal Jig	V2,84
		Samplers	Art's Manufacturing and Supply	AMS™ Dual-Tube Liner Soil Sampler	V3,16
			Simulprobe Technologies, Inc.	Core Barrel Soil Sampler	V3,62
	Herbicides	Biological Degradation	Biotrol®	Soil Washing System	V1,40
			Electrokinetics, Inc.	In Situ Bioremediation by Electrokinetic Injection	V2,120
			GRACE Bioremediation Technologies	DARAMEND™ Bioremediation Technology	V1,90
			Institute of Gas Technology	Fluid Extraction - Biological Degradation Process	V2,58
			Phytokinetics, Inc.	Phytoremediation of Contaminated Soils	V2,128
			J.R. Simplot Company	The SABRE™ Process	V1,66
		Materials Handling	U.S. EPA	Excavation Techniques and Foam Suppression Methods	V1,166
		Physical Chemical Treatment - Biological Degradation	Lasagna™ Public Private Partnership	Lasagna™ In Situ Soil Remediation	V1,202
		Physical/ Chemical Thermal Desorption	ELI Eco Logic Inc.	Gas-Phase Chemical Reduction Process	V1,68
			ELI Eco Logic International, Inc.	Thermal Desorption Unit	V1,70

APPLICABILITY INDEX (continued)

Media	Contaminants	Treatment Type	Technology Vendor	Technology	Volume, Page Number
Soil (continued)	Herbicides (continued)	Physical/ Chemical Thermal Desorption (continued)	Maxymillian Technologies, Inc.	Thermal Desorption System	V1,112
			OHM Remediation Services Corp.	X*TAX™ Thermal Desorption	V1,136
			Recycling Sciences International, Inc.	Desorption and Vapor Extraction System	V1,220
			Smith Environmental Technologies Corp.	Low Temperature Thermal Aeration (LTTA®)	V1,148
			SoilTech ATP Systems, Inc.	Anaerobic Thermal Processors	V1,150
			Roy F. Weston, Inc.	Low Temperature Thermal Treatment (LT3™) System	V1,174
		Physical/ Chemical Treatment	Arctic Foundations, Inc.	Cryogenic Barrier	V1,190
			ART International, Inc.	Low-Energy Extraction Process (LEEP)	V2,20
			Bergmann, A Division of Linatex, Inc.	Soil and Sediment Washing	V1,26
			Center for Hazardous Materials Research	Organics Destruction and Metals Stabilization	V2,32
			CF Systems Corp.	Liquified Gas Solvent Extraction (LG-SX) Technology	V1,48
			High Voltage Environmental Applications, Inc.	High-Energy Electron Irradiation	V1,94
			Ionics RCC	B.E.S.T. Solvent Extraction Technology	V1,104
			IT Corp.	Mixed Waste Treatment Process	V2,68
			National Risk Management Research Laboratory	Base-Catalyzed Decomposition Process	V1,116
		Portable Gas Chromatographs	Bruker Analytical Systems, Inc.	Mobile Environmental Monitor	V3,20
		Samplers	Geoprobe Systems	Large Bore Soil Sampler	V3,34
		Solidification/ Stabilization	Chemfix Technologies, Inc.	Solidification and Stabilization	V1,50
			WASTECH, Inc.	Solidification and Stabilization	V1,172
		Spectrometers	Graseby Ionics, Ltd., and PCP, Inc.	Ion Mobility Spectrometry	V3,36
		Test Kits	Strategic Diagnostic, Inc. Corp.	(RaPID Assay®)	V3,72
		Thermal Destruction	BWX Technologies, Inc.	Cyclone Furnace	V1,44
			U. of Dayton Research Institute	Photothermal Detoxification Unit	V2,106
			Vortec Corp.	Vitrification Process	V1,236
	Mercury	Contaminant Survey Systems	Quadrel Services, Inc.	Emflux Soil-Gas Survey System	V3,54
			Radiometer Analytical Group	Anodic Voltammetry for Mercury in Soil	V3,58
		Physical/ Chemical Treatment	Bionebraska, Inc.	BiMelyze® Mercury Immunoassay	V3,18

APPLICABILITY INDEX (continued)

Media	Contaminants	Treatment Type	Technology Vendor	Technology	Volume, Page Number
Soil (continued)	Metals	Biological Degradation	COGNIS, Inc.	Biological/Chemical Treatment	V1,52
			Geo-Microbial Technologies, Inc.	Metals Release and Removal of Wastes	V2,124
			Phytotech	Phytoremediation Technology	V1,212
			Pintail Systems, Inc.	Biomineralization of Metals	V2,130
			Pintail Systems, Inc.	Spent Ore Bioremediation Process	V1,214
		Contaminant Survey Systems	W.L. Gore and Associates, Inc.	GORE-SORBER Screening Survey	V3,82
		Field Portable X-ray Fluorescence	Metorex, Inc.	Field Portable X-Ray Fluorescence Analysis	V3,48
			NITON Corp.	XL Spectrum Analyzer	V3,52
			C-THRU Technologies Corporation	Metal Analysis Probe (MAP®) Portable Assays	V3,22
			TN Spectrace	9000 X-Ray Fluorescence Analyzer and Lead X-Ray Fluorescence Analyzer	V3,74
		Materials Handling	AEA Technology Environment	Soil Separation and Washing Process	V2,16
			Montana College of Mineral Science and Technology	Air-Sparged Hydrocyclone	V2,82
			Montana College of Mineral Science and Technology	Campbell Centrifugal Jig	V2,84
			U.S. EPA	Excavation Techniques and Foam Suppression Methods	V1,166
			U. of South Carolina	In Situ Mitigation of Acid Water	V2,108
		Physical Chemical Treatment - Biological Degradation	Lasagna™ Public Private Partnership	Lasagna™ In Situ Soil Remediation	V1,202
		Physical/ Chemical Thermal Desorption	New Jersey Institute of Technology	GHEA Associates Process	V2,86
			Geotech Development Corp.	Cold Top Ex Situ Verification of Chromium-Contaminated Soils	V1,86
		Physical/ Chemical Treatment	Arctic Foundations, Inc.	Cryogenic Barrier	V1,190
			Battelle Memorial Institute	In Situ Electroacoustic Soil Decontamination	V2,26
			Bergmann. A Division of Linatex, Inc.	Soil and Sediment Washing	V1,26
			BioGenesis Enterprises, Inc.	BioGenesisSM Soil & Sediment Washing Process	V1,32
			Brice Environmental Services Corp.	Soil Washing Process	V1,42
			Center for Hazardous Materials Research	Acid Extraction Treatment System	V2,30
			COGNIS, Inc.	TERRAMET Soil Remediation System	V1,52
			Electrokinetics, Inc.	Electrokinetic Soil Processing	V1,66

APPLICABILITY INDEX (continued)

Media	Contaminants	Treatment Type	Technology Vendor	Technology	Volume, Page Number
Soil (continued)	Metals (continued)	Physical/ Chemical Treatment (continued)	General Atomics, Nuclear Remediation Technologies Division	Acoustic Barrier Particulate Separator	V2,48
			IT Corp.	Batch Steam Distillation and Metal Extraction	V2,64
			IT Corp.	Chelation/Electrodeposition of Toxic Metals from Soils	V2,66
			IT Corp.	Mixed Waste Treatment Process	V2,68
			Lewis Environmental Services, Inc./Hickson Corp.	Chromated Copper Arsenate Soil Leaching Process	V2,76
			Morrison Knudsen Corp./Spetstamponazhgeologia Enterprises/STG Technologies	Clay-Base Grouting Technology	V1,114
			National Risk Management Research Laboratory	Volume Reduction Unit	V1,118
			Sandia National Laboratories	In Situ Electrokinetic Extraction System	V1,224
			Toronto Harbour Commission	Soil Recycling	V1,162
			U. of Houston	Concentrated Chlorine Extraction and Recovery of Lead	V2,136
		Portable Gas Chromatographs	HNU Systems, Inc.	HNU GC 311D Portable Gas Chromatograph	V3,42
		Samplers	Art's Manufacturing and Supply	AMS™ Dual-Tube Liner Soil Sampler	V3,16
			Geoprobe Systems	Large Bore Soil Sampler	V3,34
			Simulprobe Technologies, Inc.	Core Barrel Soil Sampler	V3,62
		Solidification/ Stabilization	Chemfix Technologies, Inc.	Solidification and Stabilization	V1,50
			Ferro Corp.	Waste Vitrification Through Electric Melting	V2,46
			Funderburk & Associates	Dechlorination and Immobilization	V1,78
			Geo-Con, Inc.	In Situ Solidification and Stabilization Process	V1,82
			Geosafe Corp.	GeoMelt Vitrification	V1,84
			Rocky Mountain Remediation Services, L.L.C.	Envirobond Solution	V1,222
			Sevenson Environmental Services, Inc.	MAECTITE® Chemical Treatment Process	V1,228
			Soliditech, Inc.	Solidification and Stabilization	V1,152
			Star Organics, L.L.C.	Soil Rescue Remediation Fluid	V1,232
			STC Remediation. A Division of Omega Environmental, Inc.	Organic Stabilization and Chemical Fixation/Solidification	V1,156

APPLICABILITY INDEX (continued)

Media	Contaminants	Treatment Type	Technology Vendor	Technology	Volume, Page Number
Soil (continued)	Metals (continued)	Solidification/ Stabilization (continued)	WASTECH, Inc.	Solidification and Stabilization	V1,172
			Western Product Recovery Group, Inc.	Coordinate, Chemical Bonding, and Adsorption Treatment	V2,114
		Thermal Destruction	American Combustion, Inc.	PYRETRON® Thermal Destruction	V1,22
			BWX Technologies, Inc.	Cyclone Furnace	V1,44
			Concurrent Technologies	Smelting Lead-Containing Wastes	V2,34
			Energy and Environmental Research Corp.	Hybrid Fluidized Bed System	V2,40
			Energy and Environmental Research Corp.	Reactor Filter System	V2,42
			Horsehead Resource Development Co., Inc.	Flame Reactor	V1,96
			Institute of Gas Technology	Fluidized-Bed/Cyclonic Agglomerating Combustor	V2,60
			PSI Technologies, A Division of Physical Sciences Inc.	Metals Immobilization and Decontamination of Aggregate Solids	V2,88
			Svedala Industries, Inc.	PYROKILN THERMAL ENCAPSULATION Process	V2,100
			Vortec Corp.	Vitrification Process	V1,236
	Organics	Physical/ Chemical Treatment	Arctic Foundations, Inc.	Cryogenic Barrier	V1,190
		Sensors	Geoprobe Systems	Geoprobe Conductivity System	V3,32
		Thermal Destruction	Gruppo Italimpresse	Infrared Thermal Destruction	V1,92
	PAHs	Biological Degradation	COGNIS, Inc.	Biological/Chemical Treatment	V2,36
			ECOVA Corp.	Bioslurry Reactor	V1,64
			Environmental BioTechnologies, Inc.	Fungal Degradation Process	V2,44
			Institute of Gas Technology	Fluid Extraction - Biological Degradation Process	V2,58
			Remediation Technologies, Inc.	Liquid and Solids Biological Treatment	V1,140
		Cone Penetrometers	Space and Naval Warfare Systems Center	SCAPS Cone Penetrometer	V3,64
		Contaminant Survey Systems	W.L. Gore and Associates, Inc.	GORE-SORBER Screening Survey	V3,82
		Physical/ Chemical Thermal Desorption	Geokinetics International, Inc.	Electroheat-Enhanced Nonaqueous Phase Liquids Removal	V1,196
			Maxymillian Technologies, Inc.	Thermal Desorption System	V1,112
			Recycling Sciences International, Inc.	Desorption and Vapor Extraction System	V1,220
		Physical/ Chemical Treatment	Arctic Foundations, Inc.	Cryogenic Barrier	V1,190
			Bergmann. A Division of Linatex, Inc.	Soil and Sediment Washing	V1,26

APPLICABILITY INDEX (continued)

Media	Contaminants	Treatment Type	Technology Vendor	Technology	Volume, Page Number
Soil (continued)	PAHs (continued)	Physical/ Chemical Treatment (continued)	BioGenesis Enterprises, Inc.	BioGenesis™ Soil & Sediment Washing Process	V1,32
		Portable Gas Chromatograph	Bruker Analytical Systems, Inc.	Mobile Environmental Monitor	V3,20
		Samplers	Clements, Inc.	JMC Environmental Subsoil Probe	V3,24
		Sensors	Fugro Geosciences, Inc.	Rapid Optical Screening Tool	V3,30
	PCBs	Biological Degradation	Institute of Gas Technology	Chemical and Biological Treatment	V2,56
			Institute of Gas Technology	Fluid Extraction - Biological Degradation Process	V2,58
			Phytokinetics, Inc.	Phytoremediation of Contaminated Soils	V2,128
			Phytokinetics, Inc.	Phytoremediation Process	V1,210
		Field Portable X-ray Fluorescence	Metorex, Inc.	Field Portable X-Ray Fluorescence Analysis	V3,48
		Materials Handling	U.S. EPA	Excavation Techniques and Foam Suppression Methods	V1,166
		Physical/ Chemical Thermal Desorption	Biotherm, LCC	Biotherm Process	V1,36
			ELI Eco Logic Inc.	Gas-Phase Chemical Reduction Process	V1,68
			ELI Eco Logic International, Inc.	Thermal Desorption Unit	V1,70
			KAI Technologies, Inc./Brown and Root Environmental	Radio Frequency Heating	V1,106
			New Jersey Institute of Technology	GHEA Associates Process	V2,86
			OHM Remediation Services Corp.	X*TAX™ Thermal Desorption	V1,136
			Recycling Sciences International, Inc.	Desorption and Vapor Extraction System	V1,220
			SoilTech ATP Systems, Inc.	Anaerobic Thermal Processors	V1,150
			Roy F. Weston, Inc.	Low Temperature Thermal Treatment (LT3™) System	V1,174
		Physical/ Chemical Treatment	Arctic Foundations, Inc.	Cryogenic Barrier	V1,190
			ART International, Inc.	Low-Energy Extraction Process (LEEP)	V2,20
			Bergmann, A Division of Linatex, Inc.	Soil and Sediment Washing	V1,26
			BioGenesis Enterprises, Inc.	BioGenesisSM Soil & Sediment Washing Process	V1,32
			Center for Hazardous Materials Research	Organics Destruction and Metals Stabilization	V2,32
			CF Systems Corp.	Liquified Gas Solvent Extraction (LG-SX) Technology	V1,48

APPLICABILITY INDEX (continued)

Media	Contaminants	Treatment Type	Technology Vendor	Technology	Volume, Page Number
Soil (continued)	PCBs (continued)	Physical/Chemical Treatment (continued)	Commodore Environmental Services, Inc.	Solvated Electron Remediation System	V1,56
			General Atomics	Circulating Bed Combustor	V1,80
			High Voltage Environmental Applications, Inc.	High-Energy Electron Irradiation	V1,94
			Ionics RCC	B.E.S.T. Solvent Extraction Technology	V1,104
			IT Corp.	Mixed Waste Treatment Process	V2,68
			IT Corp.	Photolytic and Biological Soil Detoxification	V2,70
			Morrison Knudsen Corp./Spetstamponazhgeologia Enterprises/STG Technologies	Clay-Base Grouting Technology	V1,114
			National Risk Management Research Laboratory	Base-Catalyzed Decomposition Process	V1,116
			State U. of New York at Oswego, Environmental Research Center	Electrochemical Peroxidation of PCB-Contaminated Sediments and Waters	V2,98
			Terra-Kleen Response Group, Inc.	Solvent Extraction Treatment System	V1,158
			Trinity Environmental Technologies, Inc.	PCB- and Organochlorine-Contaminated Soil Detoxification	V2,104
		Portable Gas Chromatographs	Bruker Analytical Systems, Inc.	Mobile Environmental Monitor	V3,20
			HNU Systems, Inc.	HNU GC 311D Portable Gas Chromatograph	V3,42
			SRI Instruments	Compact Gas Chromatograph	V3,66
			U.S. EPA	Field Analytical Screening Program - PCB Method	V3,78
		Samplers	Clements, Inc.	JMC Environmental Subsoil Probe	V3,24
			Geoprobe Systems	Large Bore Soil Sampler	V3,34
		Solidification/ Stabilization	Chemfix Technologies, Inc.	Solidification and Stabilization	V1,50
			Funderburk & Associates	Dechlorination and Immobilization	V1,78
			Geo-Con, Inc.	In Situ Solidification and Stabilization Process	V1,82
			Geosafe Corp.	GeoMelt Vitrification	V1,84
			Soliditech, Inc.	Solidification and Stabilization	V1,152
			WASTECH, Inc.	Solidification and Stabilization	V1,172
		Test Kits	Dexsil Corp.	Environmental Test Kits	V3,26
			Hanby Environmental Laboratory Procedure, Inc.	Test Kits for Organic Contaminants in Soil and Water	V3,38

APPLICABILITY INDEX (continued)

Media	Contaminants	Treatment Type	Technology Vendor	Technology	Volume, Page Number
Soil (continued)	PCBs (continued)	Test Kits (continued)	Strategic Diagnostic, Inc.	EnviroGard™ PCB Immunoassay Test Kit	V3,70
		Thermal Destruction	BWX Technologies, Inc.	Cyclone Furnace	V1,44
			Energy and Environmental Research Corp.	Hybrid Fluidized Bed System	V2,40
			Institute of Gas Technology	Fluidized-Bed/Cyclonic Agglomerating Combustor	V2,60
			U. of Dayton Research Institute	Photothermal Detoxification Unit	V2,106
			Vortec Corp.	Vitrification Process	V1,236
	PCP	Biological Degradation	Remediation Technologies, Inc.	Liquid and Solids Biological Treatment	V1,140
		Physical/ Chemical Treatment	Arctic Foundations, Inc.	Cryogenic Barrier	V1,190
		Portable Gas Chromatographs	U.S. EPA	Field Analytical Screening Program - PCP Method	V3,80
		Physical/ Chemical Thermal Desorption	Recycling Sciences International, Inc.	Desorption and Vapor Extraction System	V1,220
		Physical/ Chemical Treatment	National Risk Management Research Laboratory	Volume Reduction Unit	V1,118
			Trinity Environmental Technologies, Inc.	PCB- and Organochlorine-Contaminated Soil Detoxification	V2,104
		Test Kits	Strategic Diagnostic, Inc.	Ensys Penta Test System	V3,68
			Strategic Diagnostic, Inc.	EnviroGard™ PCB Immunoassay Test Kit	V3,70
			Strategic Diagnostic, Inc. Corp.	(RaPID Assay®)	V3,72
	Pesticides	Biological Degradation	Biotrol®	Soil Washing System	V1,40
			Electrokinetics, Inc.	In Situ Bioremediation by Electrokinetic Injection	V2,120
			GRACE Bioremediation Technologies	DARAMEND™ Bioremediation Technology	V1,90
			Institute of Gas Technology	Chemical and Biological Treatment	V2,56
			Institute of Gas Technology	Fluid Extraction - Biological Degradation Process	V2,58
			Phytokinetics, Inc.	Phytoremediation of Contaminated Soils	V2,128
			Phytokinetics, Inc.	Phytoremediation Process	V1,210
		Contaminant Survey Systems	W.L. Gore and Associates, Inc.	GORE-SORBER Screening Survey	V3,82
		Materials Handling	U.S. EPA	Excavation Techniques and Foam Suppression Methods	V1,166
		Physical/ Chemical Thermal Desorption	Biotherm, LCC	Biotherm Process	V1,36

APPLICABILITY INDEX (continued)

Media	Contaminants	Treatment Type	Technology Vendor	Technology	Volume, Page Number
Soil (continued)	Pesticides (continued)	Physical/ Chemical Thermal Desorption (continued)	ELI Eco Logic Inc.	Gas-Phase Chemical Reduction Process	V1,68
			ELI Eco Logic International, Inc.	Thermal Desorption Unit	V1,70
			KAI Technologies, Inc./Brown and Root Environmental	Radio Frequency Heating	V1,106
			OHM Remediation Services Corp.	X*TAX™ Thermal Desorption	V1,136
			Recycling Sciences International, Inc.	Desorption and Vapor Extraction System	V1,220
			Smith Environmental Technologies Corp.	Low, Temperature Thermal Aeration (LTTA)	V1,148
			SoilTech ATP Systems, Inc.	Anaerobic Thermal Processors	V1,150
			Roy F. Weston, Inc.	Low Temperature Thermal Treatment (LT3™) System	V1,174
		Physical/ Chemical Treatment	Arctic Foundations, Inc.	Cryogenic Barrier	V1,190
			ART International, Inc.	Low-Energy Extraction Process (LEEP)	V2,20
			Bergmann, A Division of Linatex, Inc.	Soil and Sediment Washing	V1,26
			Center for Hazardous Materials Research	Organics Destruction and Metals Stabilization	V2,32
			CF Systems Corp.	Liquified Gas Solvent Extraction (LG-SX) Technology	V1,48
			Commodore Environmental Services, Inc.	Solvated Electron Remediation System	V1,56
			Electrokinetics, Inc.	Electrokinetic Soil Processing	V1,66
			General Atomics	Circulating Bed Combustor	V1,80
			High Voltage Environmental Applications, Inc.	High-Energy Electron Irradiation	V1,94
			Ionics RCC	B.E.S.T. Solvent Extraction Technology	V1,104
			IT Corp.	Mixed Waste Treatment Process	V2,68
			IT Corp.	Photolytic and Biological Soil Detoxification	V2,70
			Morrison Knudsen Corp./Spetstamponazhgeologia Enterprises/STG Technologies	Clay-Base Grouting Technology	V1,114
			National Risk Management Research Laboratory	Base-Catalyzed Decomposition Process	V1,116
			State U. of New York at Oswego, Environmental Research Center	Electrochemical Peroxidation of PCB-Contaminated Sediments and Waters	V2,98

APPLICABILITY INDEX (continued)

Media	Contaminants	Treatment Type	Technology Vendor	Technology	Volume, Page Number
Soil (continued)	Pesticides (continued)	Physical/ Chemical Treatment (continued)	Terra-Kleen Response Group, Inc.	Solvent Extraction Treatment System	V1,158
			Trinity Environmental Technologies, Inc.	PCB- and Organochlorine-Contaminated Soil Detoxification	V2,104
		Portable Gas Chromatographs	Bruker Analytical Systems, Inc.	Mobile Environmental Monitor	V3,20
			SRI Instruments	Compact Gas Chromatograph	V3,66
			U.S. EPA	Field Analytical Screening Program - PCB Method	V3,78
		Samplers	Art's Manufacturing and Supply	AMS™ Dual-Tube Liner Soil Sampler	V3,16
			Clements, Inc.	JMC Environmental Subsoil Probe	V3,24
			Geoprobe Systems	Large Bore Soil Sampler	V3,34
			Simulprobe Technologies, Inc.	Core Barrel Soil Sampler	V3,62
		Solidification/ Stabilization	Chemfix Technologies, Inc.	Solidification and Stabilization	V1,50
			Funderburk & Associates	Dechlorination and Immobilization	V1,78
			Geo-Con, Inc.	In Situ Solidification and Stabilization Process	V1,82
			Geosafe Corp.	GeoMelt Vitrification	V1,84
			Soliditech, Inc.	Solidification and Stabilization	V1,152
			WASTECH, Inc.	Solidification and Stabilization	V1,172
		Spectrometers	Graseby Ionics, Ltd., and PCP, Inc.	Ion Mobility Spectrometry	V3,36
		Test Kits	Dexsil Corp.	Environmental Test Kits	V3,26
			Strategic Diagnostic, Inc.	Ensys Penta Test System	V3,68
			Hanby Environmental Laboratory Procedure, Inc.	Test Kits for Organic Contaminants in Soil and Water	V3,38
			Strategic Diagnostic, Inc. Corp.	RaPID Assay®	V3,72
		Thermal Destruction	BWX Technologies, Inc.	Cyclone Furnace	V1,44
			Energy and Environmental Research Corp.	Hybrid Fluidized Bed System	V2,40
			Institute of Gas Technology	Fluidized-Bed/Cyclonic Agglomerating Combustor	V2,60
			U. of Dayton Research Institute	Photothermal Detoxification Unit	V2,106
			Vortec Corp.	Vitrification Process	V1,236
	Petroleum Hydrocarbons	Biological Degradation	COGNIS, Inc.	Biological/Chemical Treatment	V2,36
			ECOVA Corp.	Bioslurry Reactor	V1,64

APPLICABILITY INDEX (continued)

Media	Contaminants	Treatment Type	Technology Vendor	Technology	Volume, Page Number
Soil (continued)	Petroleum Hydrocarbons (continued)	Biological Degradation (continued)	Hazardous Substance Management Research Center at New Jersey Institute of Technology, and Rutgers, the State U. of New Jersey	Pneumatic Fracturing and Bioremediation Process	V2,52
			Remediation Technologies, Inc.	Liquid and Solids Biological Treatment	V1,140
		Cone Penetrometers	Space and Naval Warfare Systems Center	SCAPS Cone Penetrometer	V3,64
			Tri-Services	Site Characterization Analysis Penetrometer System (SCAPS)	V3,76
		Contaminant Survey Systems	W.L. Gore and Associates, Inc.	GORE-SORBER Screening Survey	V3,82
		Materials Handling	National Risk Management Research Laboratory. The U. of Cincinnati and FRX, Inc.	Hydraulic Fracturing	V1,124
		Physical/ Chemical Thermal Desorption	New Jersey Institute of Technology	GHEA Associates Process	V2,86
			SIVE Services	Steam Injection and Vacuum Extraction	V1,230
			Smith Environmental Technologies Corp.	Low, Temperature Thermal Aeration (LTTA®)	V1,148
		Physical/ Chemical Treatment	Arctic Foundations, Inc.	Cryogenic Barrier	V1,190
		Portable Gas Chromatographs	SRI Instruments	Compact Gas Chromatograph	V3,66
		Solidification/ Stabilization	Soliditech, Inc.	Solidification and Stabilization	V1,152
	Radionuclides	Materials Handling	Thermo Nutech, Inc.	Segmented Gate System	V2,134
		Physical/ Chemical Treatment	Arctic Foundations, Inc.	Cryogenic Barrier	V1,190
			Bergmann, A Division of Linatex, Inc.	Soil and Sediment Washing	V1,26
			IT Corp.	Mixed Waste Treatment Process	V2,68
		Solidification/ Stabilization	Sevenson Environmental Services, Inc.	MAECTITE® Chemical Treatment Process	V1,228
			WASTECH, Inc.	Solidification and Stabilization	V1,172
		Thermal Destruction	BWX Technologies, Inc.	Cyclone Furnace	V1,44
	SVOCs	Biological Degradation	Harding Lawson Associates	Two Zone, Plume Interception. In Situ Treatment Technology	V2,48
			Biotrol®	Soil Washing System	V1,40
			ECOVA Corp.	Bioslurry Reactor	V1,64
			GRACE Bioremediation Technologies	DARAMEND™ Bioremediation Technology	V1,90
			Institute of Gas Technology	Chemical and Biological Treatment	V2,56

APPLICABILITY INDEX (continued)

Media	Contaminants	Treatment Type	Technology Vendor	Technology	Volume, Page Number
Soil (continued)	SVOCs (continued)	Biological Degradation (continued)	Institute of Gas Technology	Fluid Extraction - Biological Degradation Process	V2,58
			National Risk Management Research Laboratory	Bioventing	V1,208
			National Risk Management Research Laboratory and INTECH 180 Corp.	Fungal Treatment Technology	V1,120
			New York State Dept. of Environment Conservation/ENSR Consulting and Larson Engineers	Ex Situ Biovault	V1,126
			New York State Dept. of Environmental Conservation/R.E. Wright Environmental, Inc.	In Situ Bioventing Treatment System	V1,130
			IT Corp.	Oxygen Microbubble In Situ Bioremediation	V2,126
			Remediation Technologies, Inc.	Liquid and Solids Biological Treatment	V1,140
		Contaminant Survey Systems	Quadrel Services, Inc.	Emflux Soil-Gas Survey System	V3,54
			W.L. Gore and Associates, Inc.	GORE-SORBER Screening Survey	V3,82
		Materials Handling	U.S. EPA	Excavation Techniques and Foam Suppression Methods	V1,166
		Physical/ Chemical Thermal Desorption	Biotherm, LCC	Biotherm Process	V1,36
			ELI Eco Logic Inc.	Gas-Phase Chemical Reduction Process	V1,68
			ELI Eco Logic International, Inc.	Thermal Desorption Unit	V1,70
			IIT Research Institute/Brown and Root Environmental	Radio Frequency Heating	V1,102
			KAI Technologies, Inc./Brown and Root Environmental	Radio Frequency Heating	V1,106
			Maxymillian Technologies, Inc.	Thermal Desorption System	V1,112
			New Jersey Institute of Technology	GHEA Associates Process	V2,86
			NOVATERRA, Inc.	In-Situ Soil Treatments, (Steam/Air Stripping)	V1,134
			OHM Remediation Services Corp.	X*TAX™ Thermal Desorption	V1,136
			Recycling Sciences International, Inc.	Desorption and Vapor Extraction System	V1,220

APPLICABILITY INDEX (continued)

Media	Contaminants	Treatment Type	Technology Vendor	Technology	Volume, Page Number
Soil (continued)	SVOCs (continued)	Physical/ Chemical Thermal Desorption (continued)	SIVE Services	Steam Injection and Vacuum Extraction	V1,230
			Smith Environmental Technologies Corp.	Low, Temperature Thermal Aeration (LTTA®)	V1,148
			SoilTech ATP Systems, Inc.	Anaerobic Thermal Processors	V1,150
			Roy F. Weston, Inc.	Low Temperature Thermal Treatment (LT3™) System	V1,174
		Physical/ Chemical Treatment	Arctic Foundations, Inc.	Cryogenic Barrier	V1,190
			ARS Technologies, Inc.	Pneumatic Fracturing Extraction™ and Catalytic Oxidation	V1,24
			Bergmann, A Division of Linatex, Inc.	Soil and Sediment Washing	V1,26
			Center for Hazardous Materials Research	Organics Destruction and Metals Stabilization	V2,32
			CF Systems Corp.	Liquified Gas Solvent Extraction (LG-SX) Technology	V1,48
			Electrokinetics, Inc.	Electrokinetic Soil Processing	V1,66
			Energia, Inc.	Reductive Thermal and Photo-Thermal Oxidation Processes for Enhanced Conversion of Chlorocarbons	V2,122
			High Voltage Environmental Applications, Inc.	High-Energy Electron Irradiation	V1,94
			Hrubetz Environmental Services, Inc.	HRUBOUT® Process	V1,98
			Ionics RCC	B.E.S.T. Solvent Extraction Technology	V1,104
			IT Corp.	Mixed Waste Treatment Process	V2,68
			National Risk Management Research Laboratory	Base-Catalyzed Decomposition Process	V1,116
			National Risk Management Research Laboratory	Volume Reduction Unit	V1,118
			Terra-Kleen Response Group, Inc.	Solvent Extraction Treatment System	V1,158
			Terra Vac, Inc.	In Situ and Ex Situ Vacuum Extraction	V1,160
			Toronto Harbour Commission	Soil Recycling	V1,162
			Roy F. Weston, Inc./IEG Technologies	UVB - Vacuum Vaporizing Well	V1,176
			Xerox Corp.	2-PHASE™ EXTRACTION Process	V1,180
		Portable Gas Chromatographs	Bruker Analytical Systems, Inc.	Mobile Environmental Monitor	V3,20
			U.S. EPA	Field Analytical Screening Program - PCB Method	V3,78

APPLICABILITY INDEX (continued)

Media	Contaminants	Treatment Type	Technology Vendor	Technology	Volume, Page Number
Soil (continued)	SVOCs (continued)	Samplers	Art's Manufacturing and Supply	AMS™ Dual-Tube Liner Soil Sampler	V3,16
			Geoprobe Systems	Large Bore Soil Sampler	V3,34
			Simulprobe Technologies, Inc.	Core Barrel Soil Sampler	V3,62
		Solidification/ Stabilization	Chemfix Technologies, Inc.	Solidification and Stabilization	V1,50
			Geo-Con, Inc.	In Situ Solidification and Stabilization Process	V1,82
			STC Remediation. A Division of Omega Environmental, Inc.	Organic Stabilization and Chemical Fixation/Solidification	V1,156
			WASTECH, Inc.	Solidification and Stabilization	V1,172
			Western Product Recovery Group, Inc.	Coordinate, Chemical Bonding, and Adsorption Treatment	V2,114
		Spectrometers	Graseby Ionics, Ltd., and PCP, Inc.	Ion Mobility Spectrometry	V3,36
		Test Kits	Strategic Diagnostic, Inc. Corp.	RaPID Assay®	V3,72
		Thermal Destruction	BWX Technologies, Inc.	Cyclone Furnace	V1,44
			Institute of Gas Technology	Fluidized-Bed/Cyclonic Agglomerating Combustor	V2,60
			Sonotech, Inc.	Frequency-Tunable Pulse Combustion System	V1,154
			Svedala Industries, Inc.	PYROKILN THERMAL ENCAPSULATION Process	V2,100
			Texaco Inc.	Texaco Gasification Process	V1,162
			U. of Dayton Research Institute	Photothermal Detoxification Unit	V2,106
			Vortec Corp.	Vitrification Process	V1,236
		Other	Berkeley Environmental Restoration Center	In Situ Stream Enhanced Extraction Process	V1,28
	VOCs	Biological Degradation	Billings and Associates, Inc.	Subsurface Volatilization and Ventilation System (SVVS®)	V1,30
			Bio-Rem, Inc.	Augmented In Situ Subsurface Bioremediation Process	V1,34
			ECOVA Corp.	Bioslurry Reactor	V1,64
			Electrokinetics, Inc.	In Situ Bioremediation by Electrokinetic Injection	V2,120
			National Risk Management Research Laboratory	Bioventing	V1,208
			New York State Dept. of Environment Conservation/ENSR Consulting and Larson Engineers	Ex Situ Biovault	V1,126

APPLICABILITY INDEX (continued)

Media	Contaminants	Treatment Type	Technology Vendor	Technology	Volume, Page Number
Soil (continued)	VOCs (continued)	Biological Degradation (continued)	New York State Dept. of Environmental Conservation/R.E. Wright Environmental, Inc.	In Situ Bioventing Treatment System	V1,130
			New York State Dept. of Environmental Conservation/SBP Technologies, Inc.	Vacuum-Vaporized Well System	V1,128
			IT Corp.	Oxygen Microbubble In Situ Bioremediation	V2,126
			Phytokinetics, Inc.	Phytoremediation of Contaminated Soils	V2,128
			Phytokinetics, Inc.	Phytoremediation Process	V1,210
		Contaminant Survey Systems	Quadrel Services, Inc.	Emflux Soil-Gas Survey System	V3,54
			W.L. Gore and Associates, Inc.	GORE-SORBER Screening Survey	V3,82
		Materials Handling	AEA Technology Environment	Soil Separation and Washing Process	V2,16
			National Risk Management Research Laboratory. The U. of Cincinnati and FRX, Inc.	Hydraulic Fracturing	V1,124
			U.S. EPA	Excavation Techniques and Foam Suppression Methods	V1,166
		Physical/ Chemical Thermal Desorption	Biotherm, LCC	Biotherm Process	V1,36
			Geokinetics International, Inc.	Electroheat-Enhanced Nonaqueous Phase Liquids Removal	V1,196
			Hughes Environmental Systems, Inc.	Steam Enhanced Recovery Process	V1,100
			IIT Research Institute/Brown and Root Environmental	Radio Frequency Heating	V1,102
			KAI Technologies, Inc./Brown and Root Environmental	Radio Frequency Heating	V1,106
			Maxymillian Technologies, Inc.	Thermal Desorption System	V1,112
			New Jersey Institute of Technology	GHEA Associates Process	V2,86
			NOVATERRA, Inc.	In-Situ Soil Treatments, (Steam/Air Stripping)	V1,134
			Praxis Environmental Technologies, Inc.	In Situ thermally Enhanced Extraction (TEE) Process	V1,216
			Recycling Sciences International, Inc.	Desorption and Vapor Extraction System	V1,220
			SIVE Services	Steam Injection and Vacuum Extraction	V1,230

APPLICABILITY INDEX (continued)

Media	Contaminants	Treatment Type	Technology Vendor	Technology	Volume, Page Number
Soil (continued)	VOCs (continued)	Physical/ Chemical Thermal Desorption (continued)	Smith Environmental Technologies Corp.	Low, Temperature Thermal Aeration (LTTA®)	V1,148
			SoilTech ATP Systems, Inc.	Anaerobic Thermal Processor	V1,150
			Roy F. Weston, Inc.	Low Temperature Thermal Treatment (LT3™) System	V1,174
		Physical/ Chemical Treatment	Arctic Foundations, Inc.	Cryogenic Barrier	V1,190
			ARS Technologies, Inc.	Pneumatic Fracturing Extraction™ and Catalytic Oxidation	V1,24
			Arizona State U./Zentox Corp.	Photocatalytic Oxidation with Air Stripping	V2,18
			Berkeley Environmental Restoration Center	In Situ Stream Enhanced Extraction Process	V1,28
			CF Systems Corp.	Liquified Gas Solvent Extraction (LG-SX) Technology	V1,48
			Radian International LCC	Integrated Vapor Extraction and Steam Vacuum Stripping and Soil Vapor Extraction/Reinjection	V1,138
			Energia, Inc.	Reductive Photo-Dechlorination Treatment	V2,38
			Energia, Inc.	Reductive Thermal and Photo-Thermal Oxidation Processes for Enhanced Conversion of Chlorocarbons	V2,122
			High Voltage Environmental Applications, Inc.	High-Energy Electron Irradiation	V1,94
			Hrubetz Environmental Services, Inc.	HRUBOUT® Process	V1,98
			Institute of Gas Technology	Supercritical Extraction/Liquid Phase Oxidation	V2,62
			Ionics RCC	B.E.S.T. Solvent Extraction Technology	V1,104
			IT Corp.	Batch Steam Distillation and Metal Extraction	V2,64
			IT Corp.	Mixed Waste Treatment Process	V2,68
			KSE, Inc.	Adsorption-Integrated-Reaction Process	V1,200/ V2,24
			Morrison Knudsen Corp./Spetstamponazhgeologia Enterprises/STG Technologies	Clay-Base Grouting Technology	V1,114
			National Risk Management Research Laboratory	Volume Reduction Unit	V1,118
			Pulse Sciences, Inc.	X Ray Treatment of Organically Contaminated Soils	V2,132
			Terra-Kleen Response Group, Inc.	Solvent Extraction Treatment System	V1,158

APPLICABILITY INDEX (continued)

Media	Contaminants	Treatment Type	Technology Vendor	Technology	Volume, Page Number
Soil (continued)	VOCs (continued)	Physical/ Chemical Treatment (continued)	Terra Vac, Inc.	In Situ and Ex Situ Vacuum Extraction	V1,160
			Roy F. Weston, Inc./IEG Technologies	UVB - Vacuum Vaporizing Well	V1,176
			Xerox Corp.	2-PHASE™ EXTRACTION Process	V1,180
		Portable Gas Chromatographs	Bruker Analytical Systems, Inc.	Mobile Environmental Monitor	V3,20
			HNU Systems, Inc.	HNU GC 311D Portable Gas Chromatograph	V3,42
			Photovac Monitoring Instruments	PE Photovac Voyager Portable Gas Chromatograph	V3,56
			SRI Instruments	Compact Gas Chromatograph	V3,66
			U.S. EPA	Field Analytical Screening Program - PCB Method	V3,78
		Samplers	Clements, Inc.	JMC Envionmentalist's Subsoil Probe	V3,24
			Simulprobe Technologies, Inc.	Core Barrel Soil Sampler	V3,62
		Sensors	Geoprobe Systems	Geoprobe Conductivity System	V3,32
			Fugro Geosciences, Inc.	Rapid Optical Screening Tool	V3,30
		Solidification/ Stabilization	Geo-Con, Inc.	In Situ Solidification and Stabilization Process	V1,82
			WASTECH, Inc.	Solidification and Stabilization	V1,172
			Western Product Recovery Group, Inc.	Coordinate, Chemical Bonding, and Adsorption Treatment	V2,114
		Spectrometers	Graseby Ionics, Ltd., and PCP, Inc.	Ion Mobility Spectrometry	V3,36
		Test Kits	Hanby Environmental Laboratory Procedure, Inc.	Test Kits for Organic Contaminants in Soil and Water	V3,38
		Thermal Destruction	Energy and Environmental Research Corp.	Hybrid Fluidized Bed System	V2,40
			Institute of Gas Technology	Fluidized-Bed/Cyclonic Agglomerating Combustor	V2,60
			Sonotech, Inc.	Frequency-Tunable Pulse Combustion System	V1,154
			Svedala Industries, Inc.	PYROKILN THERMAL ENCAPSULATION Process	V2,100
			Texaco Inc.	Texaco Gasification Process	V1,162
			Vortec Corp.	Vitrification Process	V1,236
	Other	Cone Penetrometers	Tri-Services	Site Characterization Analysis Penetrometer System (SCAPS)	V3,76
		Solidification/ Stabilization	STC Remediation, A Division of Omega Environmental, inc.	Organic Stabilization and Chemical Fixation/Solidification	V1,156
Solids	Dioxins	Physical/ Chemical Treatment	Active Environmental, Inc.	TechXtract™ Process	V1,20
	Furans	Physical/ Chemical Treatment	Active Environmental, Inc.	TechXtract™ Process	V1,20

APPLICABILITY INDEX (continued)

Media	Contaminants	Treatment Type	Technology Vendor	Technology	Volume, Page Number
Solid (continued)	Metals	Physical/ Chemical Treatment	Active Environmental, Inc.	TechXtract™ Process	V1,20
	Mercury	Physical/ Chemical Treatment	Bionebraska, Inc.	BiMelyze® Mercury Immunoassay	V3,18
	PCBs	Physical/ Chemical Treatment	Active Environmental, Inc.	TechXtract™ Process	V1,20
	Pesticides	Physical/ Chemical Treatment	Active Environmental, Inc.	TechXtract™ Process	V1,20
Waste water	Aromatic VOCs	Biological Degradation	Biotrol®	Biological Aqueous Treatment System	V1,38
			Electrokinetics, Inc.	In Situ Bioremediation by Electrokinetic Injection	V2,120
			ZENON Environmental, Inc.	ZenoGem™ Process	V1,184
		Physical/ Chemical Thermal Desorption	Rochem Separation Systems, Inc.	Rochem Disc Tube™ Module System	V1,142
		Physical/ Chemical Treatment	CF Systems Corp.	Liquified Gas Solvent Extraction [LG-SX} Technology	V1,48
			High Voltage Environmental Applications, Inc.	High Energy Electron Beam Irradiation	V2,54
			High Voltage Environmental Applications, Inc.	High Energy Electron Irradiation	V1,94
			Magnum Water Technology	CAV-OX® Process	V1,108
			Matrix Photocatalytic Inc.	Photocatalytic Water Treatment	V1,110
			Pulse Sciences, Inc.	X-ray Treatment of Aqueous Solutions	V2,90
			SBP Technologies, Inc.	Membrane Filtration and Bioremediation	V1,144
			ZENON Environmental Inc.	Cross Flow Pervaporation System	V1,182
		Portable Gas Chromatographs	Analytical and Remedial Technology, Inc.	Automated Sampling and Analytical Platform	V3,14
			Bruker Analytical Systems, Inc.	Mobile Environmental Monitor	V3,20
			HNU Systems, Inc.	HNU GC 311D Portable Gas Chromatograph	V3,42
			Sentex Sensing Technology, Inc.	Scentograph Plus II Portable Gas Chromatograph	V3,60
			SRI Instruments	Compact Gas Chromatograph	V3,66
			U.S. EPA	Field Analytical Screening Program - PCB Method	V3,78
		Solidification/ Stabilization	Wheelabrator Clean Air Systems, Inc.	PO*WW*ER™ Technology	V1,178
		Spectrometers	Graseby Ionics, Ltd., and PCP, Inc.	Ion Mobility Spectrometry	V3,36

APPLICABILITY INDEX (continued)

Media	Contaminants	Treatment Type	Technology Vendor	Technology	Volume, Page Number
Wastewater (continued)	Aromatic VOCs (continued)	Test Kits	Hanby Environmental Laboratory Procedure, Inc.	Test Kits for Organic Contaminants in Soil and Water	V3,38
	Cyanide	Biological Degradation	Pintail Systems, Inc.	Spent Ore Bioremediation Process	V1,214
	Dioxins	Physical/ Chemical Thermal Desorption	ELI Eco Logic Inc.	Gas-Phase Chemical Reduction Process	V1,68
		Physical/ Chemical Treatment	CF Systems Corp.	Liquified Gas Solvent Extraction [LG-SX} Technology	V1,48
			High Voltage Environmental Applications, Inc.	High Energy Electron Irradiation	V1,94
			Matrix Photocatalytic Inc.	Photocatalytic Water Treatment	V1,110
			SBP Technologies, Inc.	Membrane Filtration and Bioremediation	V1,144
		Portable Gas Chromatographs	Bruker Analytical Systems, Inc.	Mobile Environmental Monitor	V3,20
		Solidification/ Stabilization	Wheelabrator Clean Air Systems, Inc.	PO*WW*ER™ Technology	V1,178
		Spectrometers	Graseby Ionics, Ltd., and PCP, Inc.	Ion Mobility Spectrometry	V3,36
		Thermal Destruction	BWX Technologies, Inc.	Cyclone Furnace	V1,44
	Explosives	Physical/ Chemical Thermal Desorption	New Jersey Institute of Technology	GHEA Associates Process	V2,86
		Physical/ Chemical Treatment	U.S. Filter/WTS Ultrox	Ultraviolet Radiation and Oxidation	V1,168
	Furans	Physical/ Chemical Thermal Desorption	ELI Eco Logic Inc.	Gas-Phase Chemical Reduction Process	V1,68
		Physical/ Chemical Treatment	CF Systems Corp.	Liquified Gas Solvent Extraction [LG-SX} Technology	V1,48
			High Voltage Environmental Applications, Inc.	High Energy Electron Irradiation	V1,94
			Matrix Photocatalytic Inc.	Photocatalytic Water Treatment	V1,110
			SBP Technologies, Inc.	Membrane Filtration and Bioremediation	V1,144
		Portable Gas Chromatographs	Bruker Analytical Systems, Inc.	Mobile Environmental Monitor	V3,20
		Solidification/ Stabilization	Wheelabrator Clean Air Systems, Inc.	PO*WW*ER™ Technology	V1,178
		Spectrometers	Graseby Ionics, Ltd., and PCP, Inc.	Ion Mobility Spectrometry	V3,36
		Thermal Destruction	BWX Technologies, Inc.	Cyclone Furnace	V1,44
	Halogenated VOCs	Biological Degradation	Biotrol®	Biological Aqueous Treatment System	V1,38
			ZENON Environmental, Inc.	ZenoGem™ Process	V1,184

APPLICABILITY INDEX (continued)

Media	Contaminants	Treatment Type	Technology Vendor	Technology	Volume, Page Number
Wastewater (continued)	Halogenated VOCs (continued)	Physical/ Chemical Thermal Desorption	New Jersey Institute of Technology	GHEA Associates Process	V2,86
		Physical/ Chemical Treatment	CF Systems Corp.	Liquified Gas Solvent Extraction [LG-SX} Technology	V1,48
			EnviroMetal Technologies, Inc.	In Situ and Ex Situ Metal Enhanced Abiotic Degradation of Dissolved Halogenated Organic Compounds in Groundwater	V1,72
			High Voltage Environmental Applications, Inc.	High Energy Electron Beam Irradiation	V2,54
			High Voltage Environmental Applications, Inc.	High Energy Electron Irradiation	V1,94
			Magnum Water Technology	CAV-OX® Process	V1,108
			Matrix Photocatalytic Inc.	Photocatalytic Water Treatment	V1,110
			Pulse Sciences, Inc.	X-ray Treatment of Aqueous Solutions	V2,90
			SBP Technologies, Inc.	Membrane Filtration and Bioremediation	V1,144
			U.S. Filter/WTS Ultrox	Ultraviolet Radiation and Oxidation	V1,168
			UV Technologies, Inc.	PhotoCAT™ Process	V2,112
			Roy F. Weston, Inc.	Ambersorb™ 563 Adsorbent	V2,116
			ZENON Environmental Inc.	Cross Flow Pervaporation System	V1,182
		Portable Gas Chromatographs	Analytical and Remedial Technology, Inc.	Automated Sampling and Analytical Platform	V3,14
			Bruker Analytical Systems, Inc.	Mobile Environmental Monitor	V3,20
			Sentex Sensing Technology, Inc.	Scentograph Plus II Portable Gas Chromatograph	V3,60
			SRI Instruments	Compact Gas Chromatograph	V3,66
			U.S. EPA	Field Analytical Screening Program - PCB Method	V3,78
		Solidification/ Stabilization	Wheelabrator Clean Air Systems, Inc.	PO*WW*ER™ Technology	V1,178
		Spectrometers	Graseby Ionics, Ltd., and PCP, Inc.	Ion Mobility Spectrometry	V3,36
		Thermal Destruction	Energy and Environmental Research Corp.	Hybrid Fluidized Bed System	V2,40
	Heavy Metals	Field Portable X-ray Fluorescence	HNU Systems, Inc.	HNU Source Excited Fluorescence Analyzer-Portable (SEFA-P) X-Ray Fluorescence Analyzer	V3,44
		Portable Gas Chromatographs	Bruker Analytical Systems, Inc.	Mobile Environmental Monitor	V3,20
	Herbicides	Biological Degradation	Biotrol®	Biological Aqueous Treatment System	V1,38

APPLICABILITY INDEX (continued)

Media	Contaminants	Treatment Type	Technology Vendor	Technology	Volume, Page Number
Wastewater (continued)	Herbicides (continued)	Biological Degradation (continued)	Electrokinetics, Inc.	In Situ Bioremediation by Electrokinetic Injection	V2,120
			ZENON Environmental, Inc.	ZenoGem™ Process	V1,184
		Physical/ Chemical Thermal Desorption	ELI Eco Logic Inc.	Gas-Phase Chemical Reduction Process	V1,68
		Physical/ Chemical Treatment	CF Systems Corp.	Liquified Gas Solvent Extraction [LG-SX} Technology	V1,48
			High Voltage Environmental Applications, Inc.	High Energy Electron Irradiation	V1,94
			Magnum Water Technology	CAV-OX® Process	V1,108
			Matrix Photocatalytic Inc.	Photocatalytic Water Treatment	V1,110
			SBP Technologies, Inc.	Membrane Filtration and Bioremediation	V1,144
		Portable Gas Chromatographs	Bruker Analytical Systems, Inc.	Mobile Environmental Monitor	V3,20
		Solidification/ Stabilization	Wheelabrator Clean Air Systems, Inc.	PO*WW*ER™ Technology	V1,178
		Spectrometers	Graseby Ionics, Ltd., and PCP, Inc.	Ion Mobility Spectrometry	V3,36
		Test Kits	Strategic Diagnostic, Inc. Corp.	RaPID Assay®	V3,72
		Thermal Destruction	BWX Technologies, Inc.	Cyclone Furnace	V1,44
	Inorganics	Field Portable X-ray Fluorescence	HNU Systems, Inc.	HNU Source Excited Fluorescence Analyzer-Portable (SEFA-P) X-Ray Fluorescence Analyzer	V3,44
	Metals	Biological Degradation	Colorado Dept. of Public Health and Environmental	Constructed Wetlands-Based Treatment	V1,54
			Pintail Systems, Inc.	Biomineralization of Metals	V2,130
			Pintail Systems, Inc.	Spent Ore Bioremediation Process	V1,214
		Field Portable X-ray Fluorescence	HNU Systems, Inc.	HNU Source Excited Fluorescence Analyzer-Portable (SEFA-P) X-Ray Fluorescence Analyzer	V3,44
			Metorex, Inc.	Field Portable X-ray Fluorescence Analysis	V3,48
		Physical/ Chemical Radioactive Waste Treatment	Filter Flow Technology, Inc.	Colloid Polishing Filter Method	V1,76
		Physical/ Chemical Thermal Desorption	New Jersey Institute of Technology	GHEA Associates Process	V2,86
			Rochem Separation Systems, Inc.	Rochem Disc Tube™ Module System	V1,142
		Physical/ Chemical Treatment	Atomic Energy of Canada, Limited	Chemical Treatment and Ultrafiltration	V2,22

APPLICABILITY INDEX (continued)

Media	Contaminants	Treatment Type	Technology Vendor	Technology	Volume, Page Number
Wastewater (continued)	Metals (continued)	Physical/ Chemical Treatment (continued)	Atomic Energy of Canada, Limited	Ultrasonic-Aided Leachate Treatment	V2,24
			E.I. DuPont de Nemours and Company, and Oberlin Filter Co.	Membrane Microfiltration	V1,60
			Dynaphore, Inc.	FORAGER® Sponge	V1,62
			EnviroMetal Technologies, Inc.	Reactive Barrier	V1,194
			EPOC Water, Inc.	Precipitation, Microfiltration, and Sludge Dewatering	V1,74
			Cure International, Inc.	CURE® Electrocoagulation Wastewater Treatment System	V1,58
			Lewis Environmental Services, Inc./Hickson Corp.	Chromated Copper Arsenic Soil Leaching Process	V2,76
			Matrix Photocatalytic Inc.	Photocatalytic Water Treatment	V1,110
			Morrison Knudsen Corporation/Spetstamponazhgeologia Enterprises/STG Technologies	Clay-Base Grouting Technology	V1,114
			RECRA Environmental, Inc.	Alternating Current Electrocoagulation Technology	V2,92
			Selentec Environmental, Inc.	Selentec MAG*SEP Technology	V1,226
			U. of Washington	Adsorptive Filtration	V2,110
		Portable Gas Chromatographs	HNU Systems, Inc.	HNU GC 311D Portable Gas Chromatograph	V3,42
		Solidification/ Stabilization	Wheelabrator Clean Air Systems, Inc.	PO*WW*ER™ Technology	V1,178
		Thermal Destruction	BWX Technologies, Inc.	Cyclone Furnace	V1,44
			Energy and Environmental Research Corp.	Hybrid Fluidized Bed System	V2,40
	PAHs	Physical/ Chemical Treatment	SBP Technologies, Inc.	Membrane Filtration and Bioremediation	V1,144
		Portable Gas Chromatographs	Bruker Analytical Systems, Inc.	Mobile Environmental Monitor	V3,20
			SRI Instruments	Compact Gas Chromatograph	V3,66
	PCBs	Biological Degradation	ZENON Environmental, Inc.	ZenoGem™ Process	V1,184
		Field Portable X-ray Fluorescence	Metorex, Inc.	Field Portable X-ray Fluorescence Analysis	V3,48
		Physical/ Chemical Thermal Desorption	ELI Eco Logic Inc.	Gas-Phase Chemical Reduction Process	V1,68
			New Jersey Institute of Technology	GHEA Associates Process	V2,86
		Physical/ Chemical Treatment	Calgon Carbon Oxidation Technologies	perox-pure™ Chemical Oxidation Technology	V1,46

APPLICABILITY INDEX (continued)

Media	Contaminants	Treatment Type	Technology Vendor	Technology	Volume, Page Number
Wastewater (continued)	PCBs (continued)	Physical/ Chemical Treatment (continued)	CF Systems Corp.	Liquified Gas Solvent Extraction [LG-SX} Technology	V1,48
			High Voltage Environmental Applications, Inc.	High Energy Electron Beam Irradiation	V2,54
			High Voltage Environmental Applications, Inc.	High Energy Electron Irradiation	V1,94
			Magnum Water Technology	CAV-OX® Process	V1,108
			Matrix Photocatalytic Inc.	Photocatalytic Water Treatment	V1,110
			Morrison Knudsen Corporation/Spetstamponazhgeologia Enterprises/STG Technologies	Clay-Base Grouting Technology	V1,114
			SBP Technologies, Inc.	Membrane Filtration and Bioremediation	V1,144
			U.S. Filter/WTS Ultrox	Ultraviolet Radiation and Oxidation	V1,168
		Portable Gas Chromatographs	Bruker Analytical Systems, Inc.	Mobile Environmental Monitor	V3,20
			HNU Systems, Inc.	HNU Source Excited Fluorescence Analyzer-Portable (SEFA-P) X-Ray Fluorescence Analyzer	V3,42
			Sentex Sensing Technology, Inc.	Scentograph Plus II Portable Gas Chromatograph	V3,60
			SRI Instruments	Compact Gas Chromatograph	V3,66
			U.S. EPA	Field Analytical Screening Program - PCB Method	V3,78
		Solidification/ Stabilization	Wheelabrator Clean Air Systems, Inc.	PO*WW*ER™ Technology	V1,178
		Spectrometers	Graseby Ionics, Ltd., and PCP, Inc.	Ion Mobility Spectrometry	V3,36
		Test Kits	Strategic Diagnostic, Inc.	Ensys Penta Test System	V3,68
			Hanby Environmental Laboratory Procedure, Inc.	Test Kits for Organic Contaminants in Soil and Water	V3,38
		Thermal Destruction	BWX Technologies, Inc.	Cyclone Furnace	V1,44
			Energy and Environmental Research Corp.	Hybrid Fluidized Bed System	V2,40
	PCP	Physical/ Chemical Treatment	SBP Technologies, Inc.	Membrane Filtration and Bioremediation	V1,144
			U.S. Filter/WTS Ultrox	Ultraviolet Radiation and Oxidation	V1,168
		Test Kits	Strategic Diagnostic, Inc.	Ensys Penta Test System	V3,68
			Strategic Diagnostic, Inc.	EnviroGard™ PCP Immunoassay Test Kit	V3,70

APPLICABILITY INDEX (continued)

Media	Contaminants	Treatment Type	Technology Vendor	Technology	Volume, Page Number
Wastewater (continued)	PCP (continued)	Test Kits (continued)	Strategic Diagnostic, Inc. Corp.	RaPID Assay®	V3,72
	Pesticides	Biological Degradation	Biotrol®	Biological Aqueous Treatment System	V1,38
			Electrokinetics, Inc.	In Situ Bioremediation by Electrokinetic Injection	V2,120
			ZENON Environmental, Inc.	ZenoGem™ Process	V1,184
		Physical/ Chemical Thermal Desorption	ELI Eco Logic Inc.	Gas-Phase Chemical Reduction Process	V1,68
		Physical/ Chemical Treatment	Calgon Carbon Oxidation Technologies	perox-pure™ Chemical Oxidation Technology	V1,46
			CF Systems Corp.	Liquified Gas Solvent Extraction [LG-SX} Technology	V1,48
			High Voltage Environmental Applications, Inc.	High Energy Electron Beam Irradiation	V2,54
			High Voltage Environmental Applications, Inc.	High Energy Electron Irradiation	V1,94
			Magnum Water Technology	CAV-OX® Process	V1,108
			Matrix Photocatalytic Inc.	Photocatalytic Water Treatment	V1,110
			Morrison Knudsen Corporation/Spetstamponazhgeologia Enterprises/STG Technologies	Clay-Base Grouting Technology	V1,114
			SBP Technologies, Inc.	Membrane Filtration and Bioremediation	V1,144
			U.S. Filter/WTS Ultrox	Ultraviolet Radiation and Oxidation	V1,168
		Portable Gas Chromatographs	Bruker Analytical Systems, Inc.	Mobile Environmental Monitor	V3,20
			Sentex Sensing Technology, Inc.	Scentograph Plus II Portable Gas Chromatograph	V3,60
			SRI Instruments	Compact Gas Chromatograph	V3,66
			U.S. EPA	Field Analytical Screening Program - PCB Method	V3,78
		Solidification/ Stabilization	Wheelabrator Clean Air Systems, Inc.	PO*WW*ER™ Technology	V1,178
		Spectrometers	Graseby Ionics, Ltd., and PCP, Inc.	Ion Mobility Spectrometry	V3,36
		Test Kits	Strategic Diagnostic, Inc.	Ensys Penta Test System	V3,68
			Hanby Environmental Laboratory Procedure, Inc.	Test Kits for Organic Contaminants in Soil and Water	V3,38
			Strategic Diagnostic, Inc. Corp.	RaPID Assay®	V3,72

APPLICABILITY INDEX (continued)

Media	Contaminants	Treatment Type	Technology Vendor	Technology	Volume, Page Number
Wastewater (continued)	Pesticides (continued)	Thermal Destruction	BWX Technologies, Inc.	Cyclone Furnace	V1,44
			Energy and Environmental Research Corp.	Hybrid Fluidized Bed System	V2,40
	Petroleum Hydrocarbons	Physical/ Chemical Thermal Desorption	New Jersey Institute of Technology	GHEA Associates Process	V2,86
		Physical/ Chemical Treatment	Calgon Carbon Oxidation Technologies	perox-pure™ Chemical Oxidation Technology	V1,46
			SBP Technologies, Inc.	Membrane Filtration and Bioremediation	V1,144
		Portable Gas Chromatographs	SRI Instruments	Compact Gas Chromatograph	V3,66
		Test Kits	Idetek, Inc.	Equate® Immunoassay	V3,46
	Radionuclides	Physical/ Chemical Radioactive Waste Treatments	Filter Flow Technology, Inc.	Colloid Polishing Filter Method	V1,76
		Physical/ Chemical Treatment	Atomic Energy of Canada, Limited	Chemical Treatment and Ultrafiltration	V2,22
			Atomic Energy of Canada, Limited	Ultrasonic-Aided Leachate Treatment	V2,24
			Selentec Environmental, Inc.	Selentec MAG*SEP Technology	V1,226
		Thermal Destruction	BWX Technologies, Inc.	Cyclone Furnace	V1,44
	SVOCs	Biological Degradation	Biotrol®	Biological Aqueous Treatment System	V1,38
			ZENON Environmental, Inc.	ZenoGem™ Process	V1,184
		Physical/ Chemical Thermal Desorption	ELI Eco Logic Inc.	Gas-Phase Chemical Reduction Process	V1,68
			New Jersey Institute of Technology	GHEA Associates Process	V2,86
		Physical/ Chemical Treatment	Calgon Carbon Oxidation Technologies	perox-pure™ Chemical Oxidation Technology	V1,46
			CF Systems Corp.	Liquified Gas Solvent Extraction [LG-SX} Technology	V1,48
			High Voltage Environmental Applications, Inc.	High Energy Electron Beam Irradiation	V2,54
			High Voltage Environmental Applications, Inc.	High Energy Electron Irradiation	V1,94
			Pulse Sciences, Inc.	X-ray Treatment of Aqueous Solutions	V2,90
			SBP Technologies, Inc.	Membrane Filtration and Bioremediation	V1,144
		Portable Gas Chromatographs	Analytical and Remedial Technology, Inc.	Automated Sampling and Analytical Platform	V3,14
			Bruker Analytical Systems, Inc.	Mobile Environmental Monitor	V3,20

APPLICABILITY INDEX (continued)

Media	Contaminants	Treatment Type	Technology Vendor	Technology	Volume, Page Number
Wastewater (continued)	SVOCs (continued)	Portable Gas Chromatographs (continued)	U.S. EPA	Field Analytical Screening Program - PCB Method	V3,78
		Solidification/ Stabilization	Wheelabrator Clean Air Systems, Inc.	PO*WW*ER™ Technology	V1,178
		Test Kits	Strategic Diagnostic, Inc. Corp.	RaPID Assay®	V3,72
		Thermal Destruction	BWX Technologies, Inc.	Cyclone Furnace	V1,44
	VOCs	Biological Degradation	Biotrol®	Biological Aqueous Treatment System	V1,38
			Electrokinetics, Inc.	In Situ Bioremediation by Electrokinetic Injection	V2,120
			ZENON Environmental, Inc.	ZenoGem™ Process	V1,184
		Physical/ Chemical Thermal Desorption	New Jersey Institute of Technology	GHEA Associates Process	V2,86
			Rochem Separation Systems, Inc.	Rochem Disc Tube™ Module System	V1,142
		Physical/ Chemical Treatment	Calgon Carbon Oxidation Technologies	perox-pure™ Chemical Oxidation Technology	V1,46
			CF Systems Corp.	Liquified Gas Solvent Extraction [LG-SX} Technology	V1,48
			EnviroMetal Technologies, Inc.	In Situ and Ex Situ Metal Enhanced Abiotic Degradation of Dissolved Halogenated Organic Compounds in Groundwater	V1,72
			EnviroMetal Technologies, Inc.	Reactive Barrier	V1,194
			High Voltage Environmental Applications, Inc.	High Energy Electron Irradiation	V1,94
			Pulse Sciences, Inc.	X-ray Treatment of Aqueous Solutions	V2,90
			SBP Technologies, Inc.	Membrane Filtration and Bioremediation	V1,144
			U.S. Filter/WTS Ultrox	Ultraviolet Radiation and Oxidation	V1,168
			UV Technologies, Inc.	PhotoCAT™ Process	V2,112
			Roy F. Weston, Inc.	Ambersorb™ 563 Adsorbent	V2,116
			ZENON Environmental Inc.	Cross Flow Pervaporation System	V1,182
		Portable Gas Chromatograph	Bruker Analytical Systems, Inc.	Mobile Environmental Monitor	V3,20
			HNU Systems, Inc.	HNU Source Excited Fluorescence Analyzer-Portable (SEFA-P) X-Ray Fluorescence Analyzer	V3,42
			Sentex Sensing Technology, Inc.	Scentograph Plus II Portable Gas Chromatograph	V3,60
			SRI Instruments	Compact Gas Chromatograph	V3,66

APPLICABILITY INDEX (continued)

Media	Contaminants	Treatment Type	Technology Vendor	Technology	Volume, Page Number
Wastewater (continued)	VOCs (continued)	Portable Gas Chromatograph (continued)	U.S. EPA	Field Analytical Screening Program - PCB Method	V3,78
		Solidification/ Stabilization	Wheelabrator Clean Air Systems, Inc.	PO*WW*ER™ Technology	V1,178
		Spectrometers	Graseby Ionics, Ltd., and PCP, Inc.	Ion Mobility Spectrometry	V3,36
		Test Kits	Hanby Environmental Laboratory Procedure, Inc.	Test Kits for Organic Contaminants in Soil and Water	V3,38
		Thermal Destruction	Energy and Environmental Research Corp.	Hybrid Fluidized Bed System	V2,40
	Other	Physical/ Chemical Treatment	North American Technologies Group, Inc.	Oleophilic Amine-Coated Ceramic Chip	V1,132
			RECRA Environmental, Inc.	Alternating Current Electrocoagulation Technology	V2,92
Other	Aromatic VOCs	Solidification/ Stabilization	Western Product Recovery Group, Inc.	Coordinate, Chemical Bonding, and Adsorption Treatment	V2,114
	Dioxins	Physical/ Chemical Treatment	Terra-Kleen Response Group, Inc.	Solvent Extraction Treatment System	V1,158
		Solidification/ Stabilization	Geosafe Corp.	GeoMelt Vitrification	V1,84
	Furans	Physical/ Chemical Treatment	Terra-Kleen Response Group, Inc.	Solvent Extraction Treatment System	V1,158
		Solidification/ Stabilization	Geosafe Corp.	GeoMelt Vitrification	V1,84
	Halogenated VOCs	Physical/ Chemical Treatment	Process Technologies, Inc.	Photolytic Destruction of Vapor-Phase Halogens	V1,218
		Solidification/ Stabilization	Geosafe Corp.	GeoMelt Vitrification	V1,84
	Metals	Field Portable X-ray Fluorescence	NITON Corp.	XL Spectrum Analyzer	V3,52
			TN Spectrace	9000 X-ray Fluorescence Analyzer and Lead X-ray Fluorescence Analyzer	V3,74
		Materials Handling	AEA Technology Environment	Soil Separation and Washing Process	V2,16
		Solidification/ Stabilization	Geosafe Corp.	GeoMelt Vitrification	V1,84
			Western Product Recovery Group, Inc.	Coordinate, Chemical Bonding, and Adsorption Treatment	V2,114
		Thermal Destruction	Concurrent Technologies	Smelting Lead-Containing Wastes	V2,34
	PCBs	Physical/ Chemical Treatment	Terra-Kleen Response Group, Inc.	Solvent Extraction Treatment System	V1,158
		Solidification/ Stabilization	Geosafe Corp.	GeoMelt Vitrification	V1,84
	Pesticides	Physical/ Chemical Treatment	Terra-Kleen Response Group, Inc.	Solvent Extraction Treatment System	V1,158
		Solidification/ Stabilization	Geosafe Corp.	GeoMelt Vitrification	V1,84

APPLICABILITY INDEX (continued)

Media	Contaminants	Treatment Type	Technology Vendor	Technology	Volume, Page Number
Other (continued)	SVOCs	Physical/ Chemical Thermal Desorption	Process Technologies, Inc.	Photolytic Destruction of Vapor-Phase Halogens	V1,218
		Physical/ Chemical Treatment	Terra-Kleen Response Group, Inc.	Solvent Extraction Treatment System	V1,158
		Solidification/ Stabilization	Western Product Recovery Group, Inc.	Coordinate, Chemical Bonding, and Adsorption Treatment	V2,114
	VOCs	Materials Handling	AEA Technology Environment	Soil Separation and Washing Process	V2,16
		Physical/ Chemical Thermal Desorption	Process Technologies, Inc.	Photolytic Destruction of Vapor-Phase Halogens	V1,218
		Physical/ Chemical Treatment	Terra-Kleen Response Group, Inc.	Solvent Extraction Treatment System	V1,158
		Solidification/ Stabilization	Western Product Recovery Group, Inc.	Coordinate, Chemical Bonding, and Adsorption Treatment	V2,114
	Not Applicable	Data Management Systems	GIS\Solutions, Inc.	GIS\Key™ Environmental Data Management System	V1,88

☆ U. S. GOVERNMENT PRINTING OFFICE: 1999-550-101/20002

United States
Environmental Protection Agency
Center for Environmental Research Information
Cincinnati, OH 45268

Please make all necessary changes on the below label, detach or copy, and return to the address in the upper left-hand corner.

If you do not wish to receive these reports CHECK HERE ☐; detach, or copy this cover, and return to the address in the upper left-hand corner.

Official Business
Penalty for Private Use
$300

EPA/540/R-99/500a