United States Environmental Protection Agency | Office of Emergency and Remedial Response Washington, DC 20460 | Office of Research and Development Cincinnati, OH 45268

Superfund | EPA/540/S-92/011 | September 1992

Engineering Bulletin

EPA

SELECTION OF CONTROL TECHNOLOGIES FOR REMEDIATION OF LEAD BATTERY RECYCLING SITES

Purpose

Section 121(b) of the Comprehensive Environmental Response, Compensation, and Liability Act, (CERCLA) mandates the Environmental Protection Agency (EPA) to select remedies that "utilize permanent solutions and alternative treatment technologies or resource recovery technologies to the maximum extent practicable" and to prefer remedial actions in which treatment "permanently and significantly reduces the volume, toxicity, or mobility of hazardous substances, pollutants, and contaminants as a principal element." The Engineering Bulletins are a series of documents that summarize the latest information available on selected treatment and site remediation technologies and related issues. They provide summaries and references for the latest information to help remedial project managers, on-scene coordinators, contractors, and other site cleanup managers understand the type of data and site characteristics needed to evaluate a technology for potential applicability to their Superfund or other hazardous waste sites. Those documents that describe individual site remediation technologies focus on remedial investigation scoping needs. Addenda will be issued periodically to update the original bulletins.

Introduction

The objective of this bulletin is to provide remedial project managers (RPMs), potentially responsible parties (PRPs), and their supporting contractors with information to facilitate the selection of treatment alternatives and cleanup services at lead battery recycling sites (LBRS). This bulletin condenses and updates the information presented in the EPA technical resource document (TRD) entitled; **"Selection of Control Technologies for Remediation of Lead Battery Recycling Sites,"** EPA/540/2-91/014, July 1991 which is available from The National Technical Information Service, Springfield, VA. This bulletin consolidates useful information on LBRS, such as the following:

- Description of types of operations commonly conducted, and wastes generated at LBRS;
- Technologies implemented or selected for LBRS remediation;
- Case studies of treatability studies on LBRS wastes;
- Past experience regarding the recyclability of materials that are found at LBRS; and
- Profiles of potentially applicable innovative treatment technologies.

Batteries account for more than 80% of the lead used in the United States, of which approximately 60% is reclaimed during times of low lead prices and greater percentages are reclaimed during times of high lead prices. In general, 50% of the national lead requirements are satisfied by recycled products. There are 29 Superfund lead battery recycling sites (LBRS). Twenty-two sites are on the National Priority List (NPL), and 10 of these sites have completed RODs. Removal actions are underway or completed at seven other LBRS.

LBRS are likely to contain a variety of wastes (e.g., lead, plastic, hard rubber) that are potentially recyclable. At LBRS, RPMs are typically confronted with metallic lead and lead compounds as the principal contaminants of concern. Other metals (e.g., cadmium, copper, arsenic, antimony, and selenium) are often present at LBRS, but

usually at much lower concentration than lead and often below hazardous concentrations. Also sulfuric acid from batteries may remain in liquid form in pits, ponds, lagoons, storage tanks, or treatment vessels.

Background Information on Lead-Acid Batteries, Battery Breaking and Secondary Lead Smelting Operations

- **Lead-Acid Storage Battery**

While all lead-acid storage batteries are not alike, a description is provided below of a typical lead-acid storage battery (i.e., a car battery) that is likely to have been processed at a defunct LBRS that is now on the Superfund cleanup list.

A lead-acid storage battery consists of two electrodes dipped into partly diluted sulfuric acid. The electrodes consist of metallic lead grids containing either lead dioxide paste (cathode) or spongy lead (anode). The metallic lead grids may contain various elemental additives including antimony, arsenic, cadmium, copper, and tin.

An average automotive battery weighs 17.2 kg, and contains 8.6-9.1 kg of lead (equally divided between anode and cathode), 1.4 kg of polypropylene plastic, and approximately 2 liters of 15-20% sulfuric acid. Although most battery cases are now constructed of polypropylene, they were previously composed primarily of hard rubber-like material that was called ebonite.

- **Battery Breaking and Secondary Lead Smelting Description**

The lead recovery aspects of lead-acid battery recycling operations consist of battery breaking, component separation, lead smelting and refining, as shown in Figure 1. Battery breaking is the first step in the lead recycling process. The flow diagram in Figure 2 depicts the lead-acid battery breaking process. Most breakers are either hammer mills or saw-type breakers.

The smelting process separates the metal from impurities in either blast, reverberatory, or rotary furnaces. Refining is the final step in chemically purifying recycled lead.

Lead Battery Recycling Site Characterization

Lead contaminated media at LBRS can be classified into four main groups:

- Soils, sediments, and sludges - includes soils and particulate matter intermixed with water or other aqueous components.
- Waste piles - by-products from battery recycling operations.
- Water - includes groundwater, surface water and contaminated wash water or process waters from soils, sediments, and sludges treatment processes.
- Buildings, structures and equipment - includes all process structures, buildings and equipment.

An example of a LBRS conceptual model for potential pathways of exposure is presented in Figure 3.

Lead is the primary contaminant found in soils, sediments, and sludges at LBRS. Concentrations ranging up to 7% have been encountered. Lead (Pb), lead sulfate ($PbSO_4$), lead oxide (PbO), and lead dioxide (PbO_2) are the predominant lead species found at a LBRS. Sites with carbonate soils generally contain lead carbonate ($PbCO_3$), hydrocerussite ($Pb_3(CO_3)_2(OH)_2$), or lead hillite ($Pb_4SO_4(CO_3)_2(OH)_2$). Other heavy metals such as antimony, arsenic, cadmium, and copper are sometimes present, but normally in relatively low concentrations.

Soil cleanup goals vary depending on site specific factors such as exposure routes and location of humans and sensitive environmental receptors. In spite of this site to site variability, two common cleanup goals do tend to recur. One of these includes reduction of lead concentrations in the soil, sediment, or sludge to the point that the leachate yields less than 5 mg/L of lead when subjected to an EPA-mandated leaching procedure (i.e., EP Toxicity or TCLP tests). Soils with TCLP leachates above 5 mg/L lead are considered to be hazardous waste, which means that the soils generally cannot be landfilled until they have been treated to yield a leachate less than 5 mg/L lead (Federal Register, 1990). A second common cleanup goal is the reduction of the total lead content in residential soil to a level of 500 to 1000 mg/kg. In accordance with EPA Office of Solid Waste and Emergency Response (OSWER) Directive #9355.4-02, an

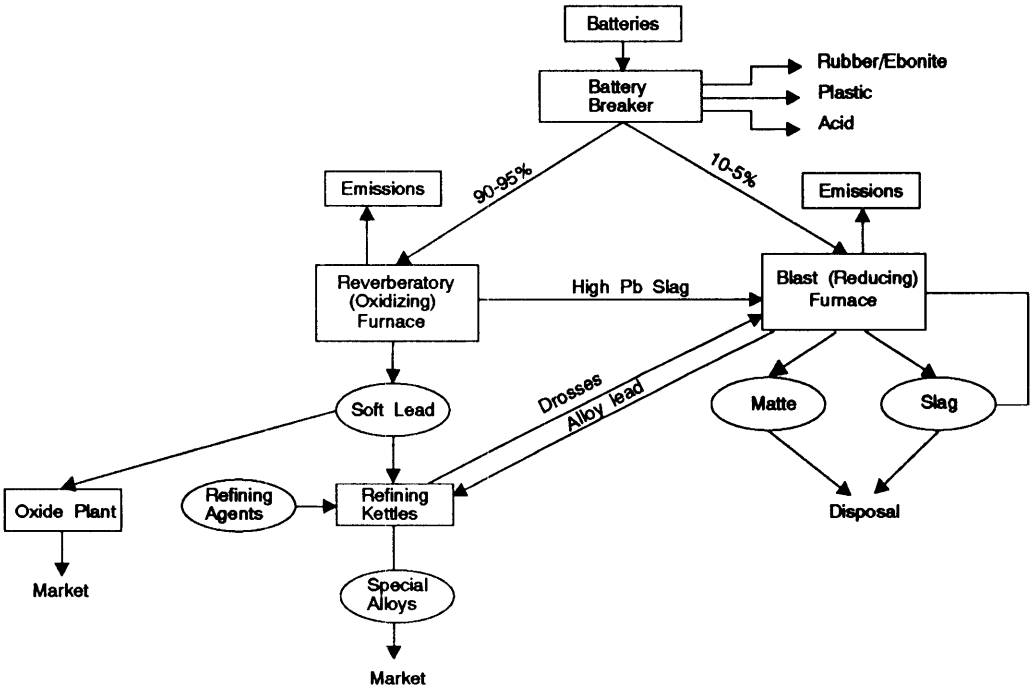

Figure 1. Generalized Secondary Lead Smelting/Refining Process
Source: Exide Corporation, 1992

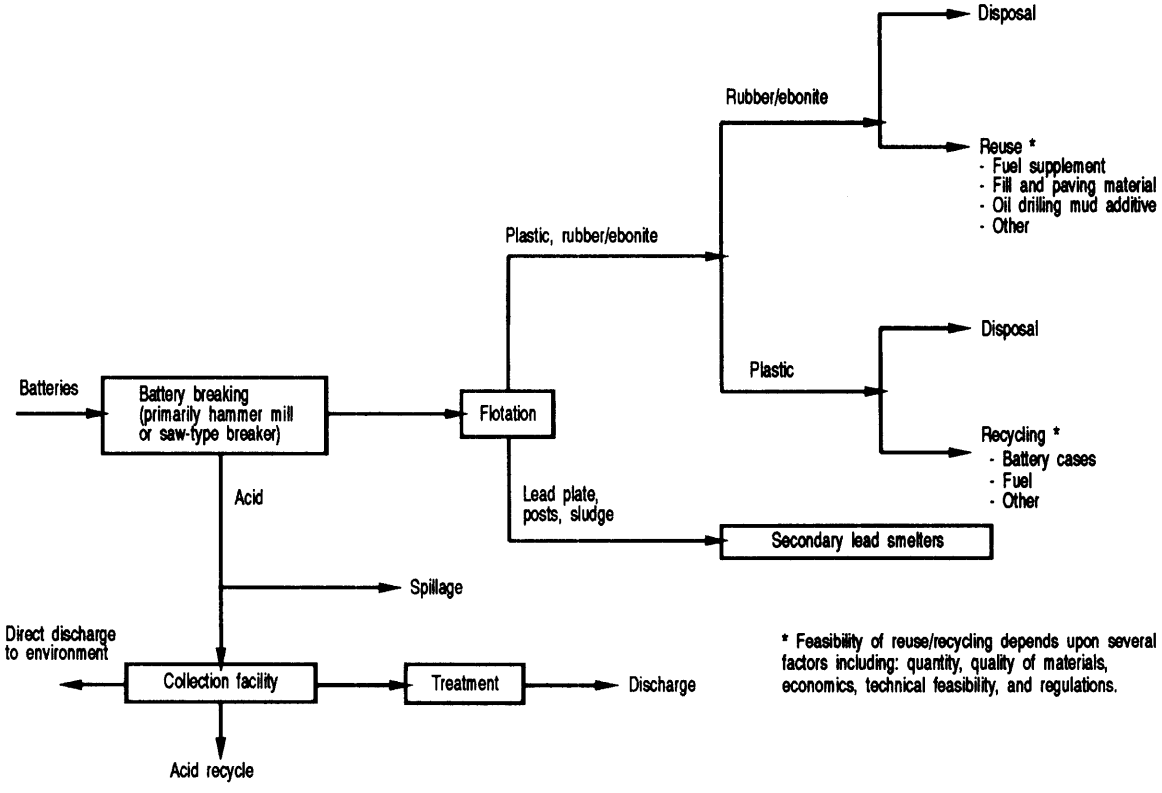

Figure 2. Flow diagram of lead-acid battery breaking.

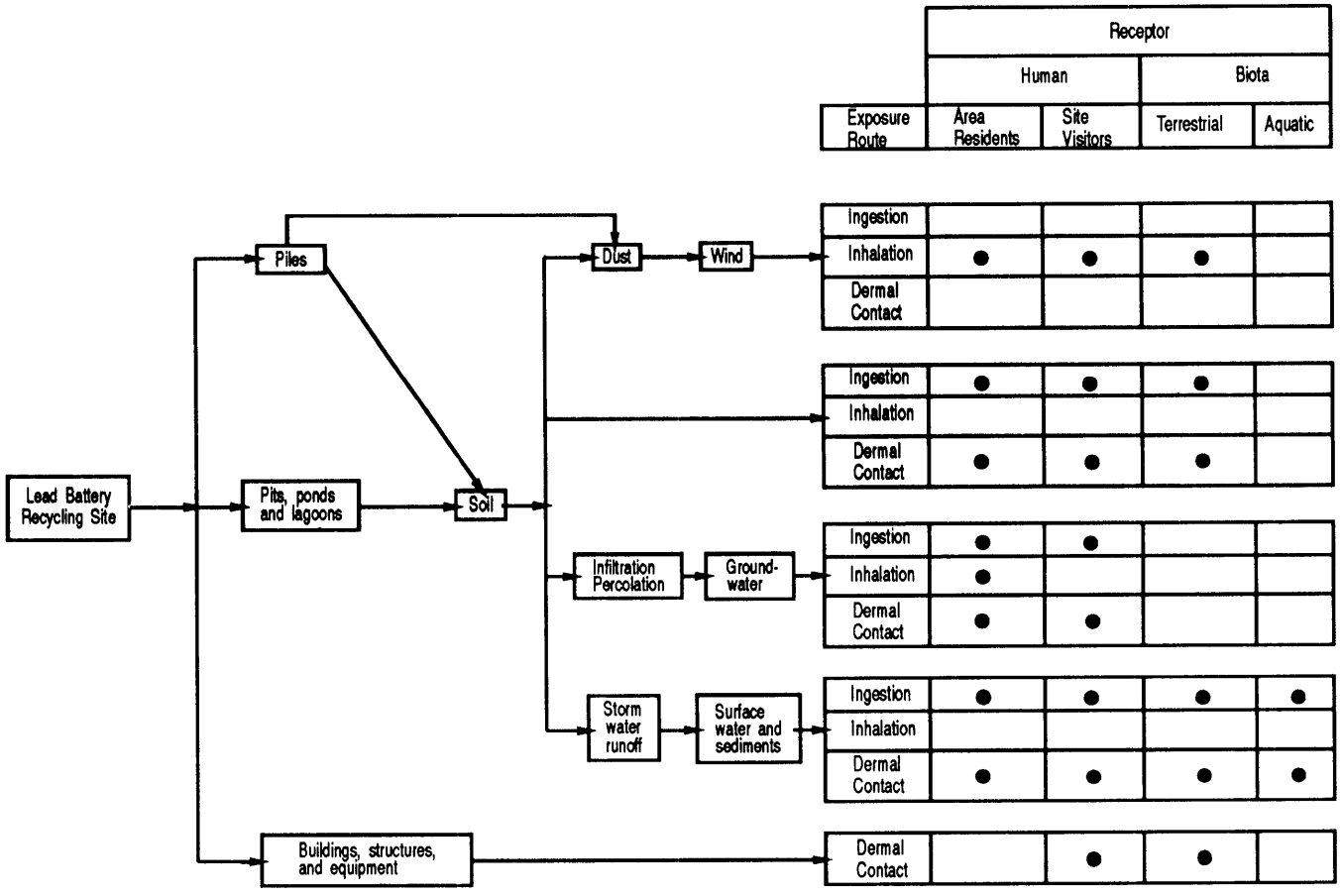

Figure 3. A lead battery recycling site conceptual model.

interim soil cleanup level of 500 to 1,000 mg/kg total lead was adopted for protection from direct contact at residential settings. OSWER is in the process of revising this directive to account for the contribution of various media to total lead exposure and to produce a strong scientific basis for choosing a soil lead cleanup level for a site. OSWER believes that the best available approach is to use the EPA uptake biokinetic model (USEPA, 1991a).

Lead is generally not very mobile in the environment, and tends to remain relatively close to its point of initial deposition following its escape from the recycling process. Soils strongly retain lead in their upper few centimeters. The capacity of soil to adsorb lead increases with increasing pH, cation exchange capacity, organic carbon content, soil/water Eh (redox potential), and phosphate levels. Lead exhibits a high degree of adsorption on clay-rich soil. Lead compounds can also be adsorbed onto hydrous oxides of iron and manganese and be immobilized in double and triple salts. Metallic lead and its compounds are heavier than water and tend to settle out. Some of the compounds are slightly soluble while

others are insoluble in water. Throughout most of the natural environment, the divalent form, Pb^{+2}, is the most stable ionized form.

Geophysical surveys can be used to determine the vertical and lateral variations in both subsurface stratigraphy and subsurface metal contamination. A variety of survey techniques (e.g., ground penetrating radar, electrical resistivity, electromagnetic induction, magnetometry, and seismic profiling) can effectively detect the locations and extent of buried waste deposits. Borehole geophysics investigations can be conducted at selected well locations in order to better characterize subsurface stratigraphy. Field screening techniques such as x-ray fluorescence (XRF) can be used to pinpoint sampling locations at areas of greatest contamination ("hot spots"). To identify the level of risk presented by the site and to evaluate remedial alternatives, soil samples are typically analyzed in the laboratory for the USEPA Target Analyte List (TAL) metals, TCLP toxicity, total cyanide, total organic carbon, sulfate content, pH, acidity/alkalinity, and cation exchange capacity.

Waste piles at LBRS are usually by-products from recycling operations. These waste piles can be broken down into several components: battery casings (made of hard rubber-like composites or polypropylene), battery internal components (e.g., polyvinyl chloride, paper), matte (a metallic sulfide waste containing iron and lead), slag, and contaminated debris. Waste samples are analyzed for the parameters mentioned above.

Groundwater does not normally create a major pathway for lead migration. However, since lead compounds are soluble at low pHs, if battery breaking activities have occurred on-site, and the battery acid was disposed on-site, elevated concentrations of lead and other metals may occur in groundwater. Monitoring wells are installed and sampled upgradient and downgradient from a lead battery recycling site. To identify the level of risk presented by the site and to evaluate remedial alternatives, samples from the wells are analyzed for TAL metals, total cyanide, total organic carbon, total suspended solids, total dissolved solids, pH, alkalinity/acidity, hardness, sulfate, chloride, specific conductance, temperature, and dissolved oxygen. The Office of Emergency and Remedial Response (OERR) has recommended an interim potable groundwater cleanup level of 15 ppb for lead (USEPA, 1990a).

A variety of contaminated structures, buildings, and equipment may be encountered at LBRS. Sampling methods to determine the nature and extent of contamination on buildings, structures, and equipment surfaces have not yet been standardized. Surface-wipe sampling is generally used.

Basic Approaches to the Control of Lead Battery Recycling Sites

Remediation strategies for LBRS may incorporate several distinct technology options assembled into a treatment train to attain specific site goals. These technologies include:

- No action
- Immobilization: preventing contaminant migration through construction of physical barriers (e.g., caps, slurry walls, liners) or utilizing chemical or thermal processes (e.g., solidification/stabilization and vitrification).
- Separation/concentration: includes technologies utilizing chemically or physically induced phase separation processes to concentrate lead contamination for further treatment, partial recycling, or disposal while remediating a major portion of the contaminated material.
- Excavation and off-site disposal: removal of contamination for disposal.

- **Treatment Technologies for Soils, Sediments, and Sludges**

No Action

Two out of 10 Record of Decisions (RODs) for LBRS have selected no action as a remedial alternative, because the results of the Remedial Investigation (RI) showed that the emergency removal processes (excavation and off-site disposal) conducted at sites were effective in removing contaminated soil from the site and the concentrations of contaminants found in the groundwater were below any applicable or relevant and appropriate requirements (ARARs). No action involves environmental monitoring and institutional restrictions such as site fencing, deed restrictions, restrictions on groundwater usage, warning against excavation and a public awareness program.

Immobilization Options

Capping--

To date five out of 10 RODs for LBRS have selected capping as an integral part of a treatment alternative. Capping involves the installation of an impermeable barrier over the contaminated soil to restrict access and reduce infiltration of water into the soil. A variety of cap designs and materials are available. Most designs are multi-layered to conform with the performance standards in 40 CFR 264.310 which addresses RCRA landfill closure requirements. However, single-layered designs are used for special purposes at LBRS, for example, when treated soil is backfilled into an excavated area. Low permeability clays and synthetic membranes are commonly used. They can be covered with top soil and vegetated to protect them from weathering and erosion. Soil materials are readily available, and synthetic materials are widely manufactured and distributed.

The cost of a cap depends on the type and amount of materials selected, the thickness of each layer, and the region. In a recent RCRA Part B permit application for a four acre hazardous waste landfill, the installed cost of a multi-layered cap was estimated at $\$6/ft^2$. The design for this cap included 3 ft of top soil, overlying a 1 ft sand layer, overlying 1 ft of compacted clay, overlying a 30 mil High Density Polyethylene (HDPE) liner, overlying 2 ft of compacted clay (USEPA, 1985).

Table 1 summarizes the data needed to evaluate capping as a remedial alternative for soils, sediments, and sludges.

Solidification/Stabilization (S/S)--

To date, 5 out of 10 RODs for LBRS have selected ex situ S/S as an integral part of a treatment alternative. Solidification processes, either in situ or ex situ, produce monolithic blocks of waste with high structural integrity. The contaminants do not necessarily interact chemically with the solidification reagents (typically cement/lime) but are primarily mechanically locked within the solidified matrix. Stabilization methods usually involve the addition of materials such as fly ash or blast furnace slag which limit the solubility or mobility of waste constituents -- even though the physical handling characteristics of the waste may not be changed or improved (USEPA, 1982). Ex situ S/S is widely demonstrated and equipment is readily available. However, long-term reliability of S/S is not yet established.

Ex situ S/S involves mixing the excavated contaminated soil with portland cement and/or lime along with other binders such as fly ash or silicate reagents to produce a strong, monolithic mass. Cement is generally suitable for immobilizing metals (such as lead, antimony, and cadmium) which are found at lead battery recycling sites. Because the pH of the cement mixture is high (approximately 12), most multivalent cations are converted into insoluble hydroxides or carbonates. They are then resistant to leaching.

Costs to use S/S technology are expected to be in a range of $30-$170 per cu yd (USEPA, 1989a). Data needs to evaluate S/S as a remedial alternative are summarized in Table 1.

Three full-scale S/S operations have been implemented at LBRS. Approximately 7,300 tons of soil contaminated with lead (EP Tox >400 mg/L) were treated in a mobile plant with portland cement, fly ash, and water at a rate of 300 tons/day at Norco Battery Site in California. EP Toxicity of the treated soil after 28 days was less than 5 mg/L (USEPA, 1991b). Approximately 11,000 tons of soil (TCLP as high as 422 mg/L) were treated by the proprietary MAECTITE™ process developed by Maecorp, Inc. at the Lee's Farm in Wisconsin. TCLP of the treated soil was less than 1 mg/L. About 20,000 cubic yards of lead-contaminated soil were recently solidified at Cedartown Battery, Inc. in Georgia. Analytical data on this site are currently being processed.

Numerous S/S treatability studies have been completed at LBRS. A pilot-scale treatability test conducted at the Gould Site in Oregon demonstrated that a mix of approximately 14% portland cement Type I-II, 25% cement kiln dust, and 35% water successfully stabilized soils and waste products crushed to 1/8 in. size. Bench-scale treatability studies conducted on soils from three LBRS (C&R Battery Site in Virginia, Sapp Battery Site in Florida, Gould Site in Oregon) demonstrated that cement-based (i.e., cement or cement with additives) blends decreased the leachability of lead and met the EP Toxicity criterion of 5 mg/L.

TABLE 1. DATA NEEDS FOR TREATMENT TECHNOLOGIES FOR SOILS, SEDIMENTS, AND SLUDGES

Technology	Data requirement
Capping (USEPA, 1987a)	• Extent of contamination • Depth to groundwater table • Climate • Waste volume
Solidification/stabilization (USEPA, 1986a and Arniella et al., 1990)	• Metal concentrations • Moisture content • Bulk density • Grain-size distribution • Waste volume • Sulfate content • Organic content • Debris size and type • TCLP
Soil washing/acid leaching (USEPA, 1989c and USEPA, 1990c)	• Soil type and uniformity • Moisture content • Bulk density • Grain-size distribution • Clay content • Metal concentrations/species • pH • Cation exchange capacity • Organic matter content • Waste volume • Mineralogical characteristics • Debris size and type • TCLP
Off-site land disposal (USEPA, 1987b)	• Soil characterization as dictated by the landfill operator and the governing regulatory agency • Waste volume • TCLP

In situ treatment of contaminated soils is innovative. Two specific in situ S/S techniques, under the Superfund Innovative Technology Evaluation (SITE) Program, hold promise for LBRS.

International Waste Technologies/Geo-Con, Inc.-- This in situ solidification/stabilization technology immobilizes organic and inorganic compounds in wet or dry soils, using additives to produce a cement-like mass. The basic components of this technology are: a deep soil mixing system (DSM) which delivers and mixes the chemicals with the soil in situ; and a batch mixing plant to supply the International Waste Technologies (IWT) proprietary treatment chemicals. The IWT technology can be applied to soils, sediments, and sludges contaminated with organic compounds and metals. The SITE Demonstration of this technology occurred at a PCB-contaminated site in April, 1988 and the results are summarized in an Applications Analysis Report (USEPA, 1990b).

S.M.W. Seiko, Inc.-- The Soil-Cement Mixing Wall (S.M.W.) technology developed by Seiko, Inc. involves the in situ stabilization and solidification of contaminated soils. Multi-axis, overlapping, hollow-stem augers are used to inject solidification/stabilization agents and blend them with contaminated soils in situ. The product is a monolithic block down to the treatment depth. This

technology is potentially applicable to soils contaminated with metals and semi-volatile organic compounds. The search for a demonstration site is currently underway.

Vitrification--

As with solidification, there are both ex situ and in situ procedures for vitrification. In situ vitrification converts contaminated soils into chemically inert, stable glass and crystalline materials by a thermal treatment process. Large electrodes are inserted into soil containing significant levels of silicates. Because soil typically has low conductivity, flaked graphite and glass frit are placed on the soil surface between the electrodes to provide a starter path for electric current. A high current passes through the electrodes and graphite. The heat melts contaminants, gradually working downward through the soil. Volatile compounds are collected at the surface for treatment. After the process ends and the soil has cooled, the waste material remains fused in a chemically inert and crystalline form that has very low leachability rates. This process can be used to remove organics and/or immobilize inorganics in contaminated soils or sludges. It has not yet been applied at a Superfund site. However, it has been field demonstrated on radioactive wastes at the DOE's Hanford Nuclear Reservation by the Geosafe Corporation. Geosafe has also contracted to conduct two superfund site cleanups, one in Spokane, WA, and another in Grand Ledge, MI. Large-scale remediation of this process has been suspended temporarily because of the loss of offgas confinement and control during the recent large-scale testing of its equipment that resulted in fire.

Ex situ vitrification involves heating the excavated soil by a thermal process to form chemically inert materials. Two specific ex situ vitrification techniques under the SITE Program have application to LBRS.

Retech, Inc. Plasma Reactor--This thermal treatment technology uses heat from a plasma torch to create a molten bath that detoxifies contaminants in soil. Organic contaminants vaporize and react at very high temperatures to form innocuous products. Solids melt into the molten bath. Metals remain in this phase, which -- when cooled -- forms a non-leachable matrix. It is most appropriate for soils and sludges contaminated with metals and hard-to-destroy organic compounds. This technology was demonstrated in August 1991 at a Department of Energy research facility in Butte, Montana and the final demonstration report will be completed in August 1992.

Babcock and Wilcox Co. Cyclone Furnace Process--This cyclone furnace technology is designed to decontaminate wastes containing both organic and metal contaminants. The cyclone furnace retains heavy metals in a non-leachable slag and vaporizes organic materials prior to incinerating them. The treated soils resemble natural obsidian (volcanic glass), similar to the final product of vitrification. This technology is applicable to solids and soil contaminated with organic compounds and metals. This technology was demonstrated in November 1991 at Babcock and Wilcox Co. research facility in Alliance, Ohio.

Separation/Concentration Options

Soil Washing and Acid Leaching--

Soil washing is a water-based process for mechanically scrubbing soils ex situ to remove undesirable contaminants. The process removes contaminants from soils in one of two ways: by dissolving or suspending them in the wash solution or by concentrating them into a smaller volume of soil through simple particle size separation techniques. Acid leaching removes lead from soils by first converting the lead to a soluble salt, and then precipitating a lead salt from solution.

Implementation of this technology requires excavating the lead-contaminated soil, washing the lead on-site with a solution (such as nitric acid or EDTA), and returning the treated soil to the site for disposal in the excavation area. One of the limitations of soil washing as a viable alternative concerns the physical nature of the soil. Soils which are high in clay, silt, or fines have been difficult to treat.

Figure 4 is a process flow diagram of an acid leaching process developed by U.S. Bureau of Mines. This process converts lead sulfate and lead dioxide to lead carbonate, which is soluble in nitric acid. Lead is recovered from the leaching solution by precipitating with sulfuric acid (Schmidt, 1989). There is a potential market for lead sulfate. The Bureau of Mines also investigated converting the lead compounds to carbonates followed by leaching with fluosilicic acid. Electrowinning recovers metallic lead from solution while regenerating the acid for

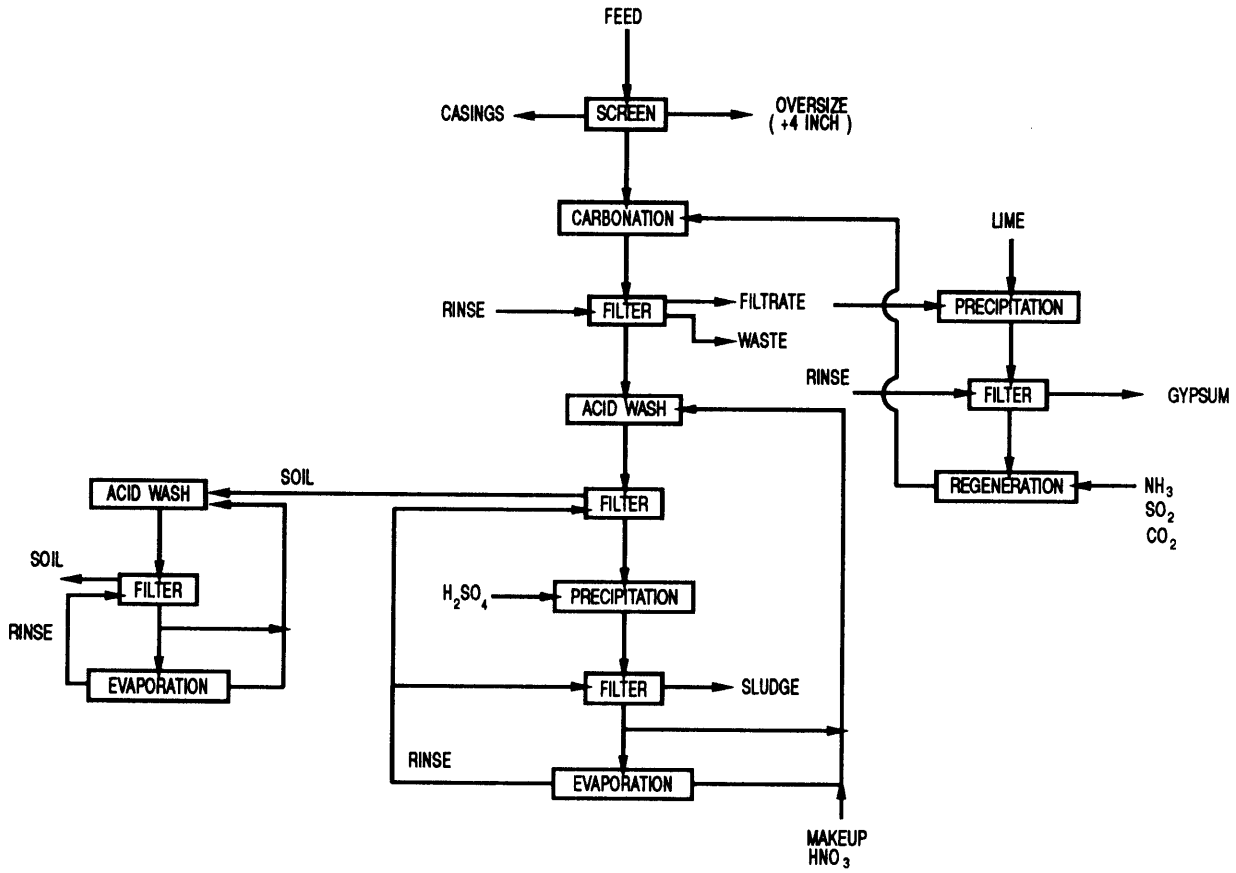

Figure 4. Bureau of Mines acid leaching process.
Source: Schmidt, 1989.

recycle. The clean soil can be returned to the site but waste streams from either soil washing processes require further treatment before final discharge.

Actual field experience of cleaning soil at LBRS is limited. Two sites (Lee's Farm in Woodville, Wisconsin and ILCO site in Leeds, Alabama) have unsuccessfully attempted soil washing of contaminated soil. One ROD (United Scrap Lead Co. Site in Ohio) out of 10 for LBRS has selected acid leaching as an integral part of the treatment alternative but full-scale treatment has not occurred. The Bureau of Mines (BOM) conducted bench-scale studies to evaluate the performance of acid leaching solutions on lead in contaminated soil at battery recycling sites. Table 2 shows some representative results from the Bureau of Mines tests. The results indicated that nitric acid solutions can achieve very high removal efficiencies for soil (greater than 99%) and an EP Toxicity level less than 1 mg/L (Schmidt, 1989). BOM estimates the cost of full-scale operation to be $208 per cu yd of soil.

EPA completed a series of laboratory tests on soil and casing samples from metal recycling sites. The soil samples from these sites were subjected to bench-scale washing cycles using water, EDTA, or a surfactant (Tide detergent), respectively. Soil washing did not remove significant amounts of lead from any of the soil fractions. The lead was not concentrated in any particular soil fraction but rather was distributed among all the fractions. A comparison of lead concentrations in the wash waters indicated that the EDTA wash performed better than the surfactant and water washes (PEI Associates Inc., 1989). While EDTA was reasonably effective in removing lead, Bureau of Mines researchers observed that its effectiveness seemed to vary with the species of lead present (Schmidt, 1989). Additional bench-scale studies are required to verify that site-specific cleanup goals can be achieved employing these techniques. EPA researchers are also in the early stages of investigating the use of milder acids (e.g., acetic acid) than those acids used to date (e.g., nitric, fluosilicic) for leaching of lead from soils (USEPA, 1990d).

TABLE 2. REPRESENTATIVE RESULTS OF THE BUREAU OF MINES TREATABILITY TESTS ON SELECTED SAMPLES OF BATTERY BREAKER SOIL WASTES

Site/waste	Common lead species	Average[a] lead total (ppm)	Leaching method	Total lead (ppm)	EP Toxicity (mg/L)
United Scrap Lead soil	Pb, $PbSO_4$, PbO_x	8,000-18,000	15% HNO_3, 2-hr wash and 1% HNO_3, 24-hr soak	200	<1.0
United Scrap Lead soil	Pb, $PbSO_4$, PbO_x	8,000-18,000	80 g/L F*, 4-hr & 20 g/L F*, 4-hr, 2-stage wash, 1% HNO_3, 24-hr soak	203	<1.0
Arcanum soil	Pb (6.6%), $PbSO_4$	71,000	80 g/L F*, 4-hr, 50°C & 20 g/L F*, 4-hr, 50°C, 2-stage leach and 1% HNO_3, 24-hr wash	334	0.26
Arcanum soil	Pb (6.6%), $PbSO_4$	71,000	15% HNO_3, 2-hr, 50°C leach and 1% HNO_3, 50°C, 24-hr wash	<250	<1.0
C&R Battery Soil Sample B	Pb, $PbSO_4$, $PbCO_3$, PbO_2	17,000	15% HNO_3, 2-hr and 2% HNO_3, 24-hr wash and 1-hr water rinse	29	<0.1

[a]No initial EP Toxicity data available.
F* Fluosilicic acid

Source: Schmidt, 1989

European vendor firms in the soil washing business have been remediating for a number of years sites contaminated with lead. Most of their experience has been with relatively lower lead concentrations (typically less than 500 ppm) from mine tailings and smelter waste materials (bag house dust and slag). No European firms have been found to date who have direct experience in treating soils from lead battery recycling sites (or equivalent) where the lead contamination typically could be around 7,000 ppm total lead. However, in discussions with certain of these vendors, they are of the opinion that soil washing may have application although bench-scale treatability tests would be needed to verify performance.

Soil Excavation and Off-Site Disposal

Excavation and removal of contaminated soil to a RCRA landfill have been performed in the past at LBRS but probably will not continue unless the materials are treated prior to disposal due to land disposal restrictions (LDRs). Excavation and removal are applicable to almost all site conditions, although they may be cost-prohibitive for sites with large volumes, greater depths or complex hydrogeologic environments. Determining the feasibility of off-site disposal requires knowledge of LDRs and other regulations developed by state governments. Without treatment, this technology may not meet RCRA LDRs. The LDRs prohibit the land disposal of certain RCRA hazardous wastes unless they meet specified treatment standards. If lead-contaminated wastes (i.e., soils and fragments of battery cases) fail the Toxicity Characteristic Leaching Procedure (TCLP) test with lead levels equal to or greater than 5.0 mg/L, then, if excavated, their subsequent handling and disposal must comply with RCRA hazardous waste regulations.

Cost estimates for this technology range from $287-$488 per cu yd of soil.

- **Treatment Technologies for Waste Piles**

Waste pile removal and off-site disposal have been practiced in the past but probably will not continue due to LDRs, unless the materials are treated prior to disposal.

Table 3 summarizes the data needs for treatment technologies for waste piles.

Washing of Battery Casings

This technology, developed by the Bureau of Mines (BOM), is similar to acid leaching of soil but somewhat less complicated. Lead contamination is principally in the form of $PbSO_4$ in microcracks in the casing. Casing materials are granulated to less than 3/8 inch to create enough exposed surface area that the $PbSO_4$ could then be successfully removed by the leaching agent such as nitric acid.

There has been no actual field experience to date in the washing of battery casings at lead battery recycling sites. BOM conducted bench-scale treatability studies that showed good removal efficiencies (Table 4). The residual battery casing materials have an EP Toxicity lead concentration less than 5 mg/L (Schmidt, 1989).

Separation and Cleaning of Battery Casings

This alternative comprises excavation of the waste piles, followed by on-site separation of battery casing fragments. Separation is followed by recycling (possibly off-site) of those components that have recycle value; RCRA off-site disposal of hazardous non-recyclable components; and on-site disposal of nonhazardous components.

Canonie Environmental Services Corp. under contract to NL Industries, Inc. has developed a proprietary process for remediating lead battery and smelting wastes at the Gould Site in Portland, Oregon (Canonie Environmental, undated). The process separates the waste materials into recyclable and nonrecyclable products. The recyclable products consist of:

- Materials with a lead content sufficiently high for recycling, and
- Cleaned materials such as plastic and ebonite that will pass the EP Toxicity test for lead.
- The materials that cannot be cleaned to pass the EP Toxicity test for lead and do not contain sufficient lead for recycling are considered "nonrecyclable".

The process is shown schematically in Figure 5. The battery casing is crushed and washed in the first stage. The fines are screened from the washed material, the

TABLE 3. DATA NEEDS FOR TREATMENT TECHNOLOGIES FOR WASTE PILES

Technology	Data requirement
Off-site landfill (USEPA, 1987b)	• Waste pile characterization as dictated by land disposal restrictions • Waste volume • TCLP
Washing of battery casings	• Casing type • Bulk density • Grain-size distribution • Metal concentrations • TCLP
Separation of battery casings	• Composition of battery casings • Metal concentrations • Waste volume • Other information required by recipient • TCLP
Recycling	• Potential buyer/user • Allowable lead content in ebonite/plastic for use as fuels • Lead content for acceptance by smelter

TABLE 4. REPRESENTATIVE RESULTS OF THE BUREAU OF MINES TREATMENT TESTS ON SELECTED CHIP SAMPLES OF BROKEN BATTERY CASING WASTES

Site/waste	Common lead species	Average[a] lead total (ppm)	Leaching method	Total lead (ppm)	EP Toxicity (mg/L)
United Scrap lead granulated chips	$PbSO_4$, Pb	3,000	0.5% HNO_3, 1-hr, 20°C wash	86	<0.2
Arcanum broken chips	$PbSO_4$, Pb	3,000	1% HNO_3, tap water, 50°C, 24-hr, agitated	210	<3.5
C&R Battery casing chips	$PbSO_4$, Pb	175,000	1% HNO_3 4-hr, wash and water rinse	277	0.15
Gould buried casing chips (broken)	$PbCO_3$, $PbSO_4$	193,000	Ammonium carbonate carbonation, 1% HNO_3, 20°C, 4-hr wash	145	0.52
Rhone-Poulenc casing chips (broken)	$PbCO_3$	65,000	Calcium carbonate carbonation, 0.5% HNO_3, 20°C, 1-hr wash	516	3.68

[a]No initial EP Toxicity data available.

Source: Schmidt, 1989

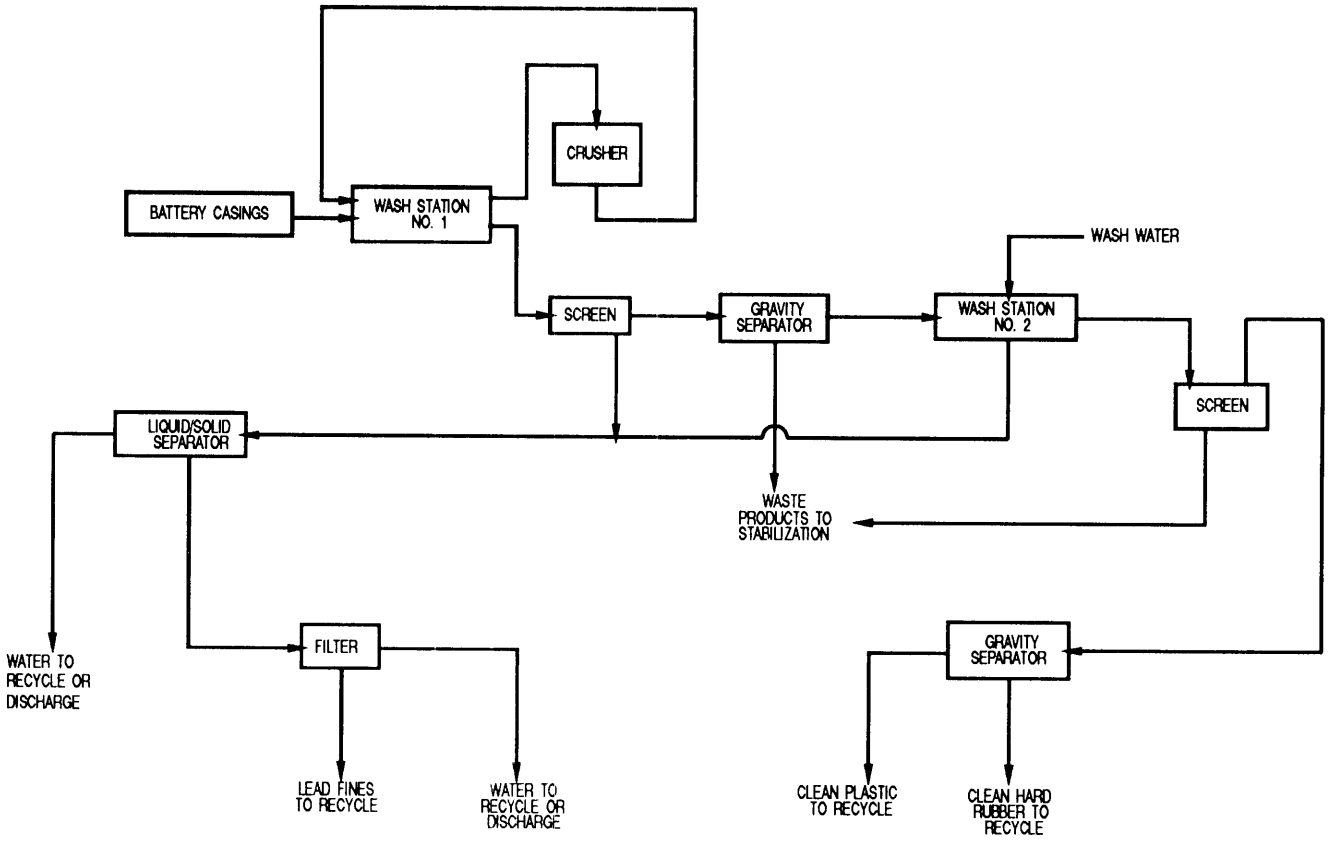

Figure 5. Battery waste treatment process.
Source: Canonie Environmental.

solids are separated from the water in a settling tank, and the settled pulp is filtered from the solution. These materials are the filter cake that will typically contain more than 40% lead and less than 30% moisture. Following the first wash, the screen oversize is fed to a gravity separation device. This system separates the plastic and ebonite in the waste from furnace products, rocks, and trash excavated with the waste. The ebonite and plastic material passes to the second wash stage where the residual amounts of lead contamination are removed.

Performance at the Gould Site--The Gould site contains approximately 117,500 tons of waste. Canonie claims that its separation and washing process there could produce approximately 80,500 tons of recyclable materials and 37,000 tons of material for stabilization and subsequent on-site disposal. At other sites, the amount of recyclable material may vary according to site history and use (Canonie Environmental, undated).

Canonie Environmental conducted a marketing study to identify the markets for the products from the above process. The market suggested for the lead fines are primary and secondary lead smelters. Plastic, if it can be suitably cleaned, appears to have numerous potential users. The most likely market for ebonite from the Gould site appears to be as a fuel supplement for cement kilns or power plants (Canonie Environmental, 1990). Additional market research is planned to assess the effect of the new RCRA boiler and industrial furnace regulations regarding combustion of hazardous wastes. As noted below, secondary lead smelters are potential users of hard rubber-like battery casings, but none are sufficiently close to the Gould site.

Innovative Processes for Waste Piles Treatment

The Horsehead Resource Development Co., Inc. Flame Reactor Process--A patented, hydrocarbon-fueled, flash smelting system that treats residues and wastes containing metals. The reactor processes wastes with a very hot reducing gas >2000°C produced from the combustion of solid or gaseous hydrocarbon fuels in oxygen-enriched air. In a compact, low cost reactor, the feed materials react rapidly, allowing a high waste throughput. The end products are a non-leachable slag (glass-like when cooled) and a recyclable heavy metal-enriched oxide, which may be marketable. This technology has potential application to soils contaminated with heavy metals. A SITE demonstration was performed at the Monaca facility in Pennsylvania in March 1991. The waste material was a secondary lead smelter blast furnace slag from the National Smelting and Refining Site in Atlanta, Georgia. Lead and other metals were removed from the raw waste and concentrated in the bag house dust which may be recycled for its lead content. The process reduced the lead content of the slag from 5.4% to 0.6%. All samples of processed waste slag passed the TCLP test for metals. For lead, the TCLP values fell from approx. 5 mg/L to <0.33 mg/L (USEPA, 1991c).

The Risk Reduction Engineering Laboratory (RREL) Debris Washing System (DWS)--Developed by RREL staff and IT Environmental Programs, Inc., this technology will decontaminate debris found at Superfund sites throughout the country. The DWS can clean various types of debris (e.g., metallic, masonry, or other solids) that are contaminated with hazardous chemicals such as pesticides, PCBs, lead, and other metals. Site demonstration was performed at three Superfund sites (Carter Industrial Superfund Site in Detroit, MT, PCB-Contaminated Site in Hopkinsville, KY, and Shaver's Farm Site in Walker County, GA).

Bench-scale studies conducted on six pieces of debris including plastic spiked with DDT, lindane, PCB and lead sulfate, then washed using surfactant achieved an overall percentage reduction of lead greater than 98%. This technology has potential application to battery casings and other metallic and masonry debris found at LBRS.

As part of the emerging technology portion of the SITE Program, the **Center for Hazardous Materials Research (CHMR)** proposes to research, develop, and evaluate the economics of using secondary lead smelters for the recovery of lead from rubber battery casings. Secondary lead smelting technology is a process which may be able to remove the lead from the battery casings and other waste materials. The net result will be the detoxification of these materials while providing a usable product (i.e., reclaimed lead). A test was conducted in September 1991 with five truckloads of battery casing material at Exide's Reading, PA smelter. The initial results were promising, but the project report has not yet been published.

- **Treatment Technologies for Water**

Treatments using precipitation/flocculation/sedimentation and ion exchange are often considered for remediation of LBRS. Contaminated water from pits, ponds, and lagoons is typically pumped and treated together with groundwater.

Table 5 summarizes the data needs for treatment technologies for water.

Precipitation/Flocculation/Sedimentation

The combination of precipitation/flocculation/sedimentation is a well-established technology with specific operating parameters for metals removal from ground and surface waters. Typical removal of metals employs precipitation with hydroxides, carbonates, or sulfides. Generally lime, soda ash, or sodium sulfide is added to water in a rapid-mixing tank along with flocculating agents such as alum, lime, and various iron salts. This mixture then flows to a flocculation chamber that agglomerates particles, which are then separated from the liquid phase in a sedimentation chamber. Hydroxide precipitation with lime is the most common choice. Metal sulfides exhibit significantly lower solubility than their hydroxide counterparts, achieve more complete precipitation, and provide stability over a broad pH range. At a pH of 4.5, sulfide precipitation can achieve the EPA-recommended standard for final cleanup level for lead in groundwater usable for drinking water (i.e., 15 μg/L). Sulfide precipitation -- often effective -- can be considerably more expensive than hydroxide precipitation, due to higher chemical costs and increased process complexity. The precipitated solids would then be handled in a manner similar to contaminated soils. The supernatant would be discharged to a nearby stream or to a publicly owned treatment works (POTW).

Ion Exchange

Ion exchange is a process whereby the toxic ions are removed from the aqueous phase in an exchange with relatively harmless ions held by the ion exchange material. Modern ion exchange resins consist of synthetic organic materials containing ionic functional groups to which exchangeable ions are attached. These synthetic resins are structurally stable and exhibit a high exchange capacity. They can be tailored to show selectivity towards specific ions. The exchange reaction is reversible and concentration-dependent; the exchange resins are regenerable for reuse. All metallic elements -- when present as soluble species, either anionic or cationic -- can be removed by ion exchange.

TABLE 5. DATA NEEDS FOR TREATMENT TECHNOLOGIES FOR WATER

Technology	Data requirement
Precipitation/flocculation/sedimentation (USEPA, 1989b)	• Total suspended solids • pH • Metal concentrations • Oil and grease • Specific gravity of suspended solids
Ion exchange (USEPA, 1989b)	• Total suspended solids • Total dissolved solids • Inorganic cations and anions • Oil and grease • pH
Pumping via wells	• Depth to water table • Groundwater gradients • Hydraulic conductivity • Specific yield estimate • Porosity • Thickness of aquifers • Storativity

A practical upper concentration limit of toxic ions for ion exchange is about 2,500 to 4,000 mg/L. A higher concentration results in rapid exhaustion of the resin and inordinately high regeneration costs. Suspended solids in the feed stream should contain less than 50 mg/L to prevent plugging the resins (USEPA, 1986b).

Innovative Processes for Water Treatment

The Bio-Recovery Systems, Inc. Biological Sorption Process--Bio-Recovery Systems, Inc. in Las Cruces, New Mexico is testing AlgaSORB^R, a new technology for the removal and recovery of heavy metal ions from groundwater. This biological sorption process is based on the affinity of algae cell walls for heavy metal ions. This technology is being tested for the removal of metal ions that are "hard" or contain high levels of dissolved solids from groundwater or surface leachates. This process is being developed under the SITE Emerging Technologies Program.

Colorado School of Mines' Wetlands-Based Treatment--This approach uses natural biological and geochemical processes inherent in man-made wetlands to accumulate and remove metals from contaminated water. The treatment system incorporates principal ecosystem components from wetlands, such as organic soils, microbial fauna, algae, and vascular plants. Waters which contain high metal concentrations and have low pH flow through the aerobic and anaerobic zones of the wetland ecosystem. The metals can be removed by filtration, ion exchange, adsorption, absorption, and precipitation through geochemical and microbial oxidation and reduction.

Conclusion

EPA's recent publication of the document, **Selection of Control Technologies for the Remediation of Lead Battery Recycling Sites,** EPA/540/2-91/014, enables EPA, State, and private sector remediation managers to quickly identify past experience and information that can be applied to site characterization and control technology evaluation activities.

Regarding the remediation of soils, sediments, and sludges, the feasibility of the previously popular remedy of excavation and off-site disposal has been basically eliminated unless a waiver can be obtained or the soil is determined to pose a threat to groundwater, but is not considered a RCRA hazardous waste. Cement-based S/S has been implemented at full-scale on at least three sites (Norco, CA; Lee's Farm,WI; Cedartown Battery, GA) and is scheduled for implementation at several others. S/S of soils can be expected to remain a popular option for lead and other heavy metal contaminated soils, sediments, and sludges due to (a) relative simplicity, (b) ready availability of equipment and vendors, and (c) low cost. Disadvantages include: (a) S/S can cause substantial increases (e.g., 30%) in the volume of material, (b) long-term immobilization of lead is not yet demonstrated, and (c) organic contaminants present in the soil may interfere with the S/S process.

Should S/S of soils, sediments, and sludges become obsolete due to observed leaching failures, then the chances of acceptance of other novel technologies such as in situ and ex situ vitrification, soil washing, and acid leaching may improve. In situ and ex situ vitrification may provide improved permeation and leaching resistance, but tend to be more complicated and expensive than cement-based solidification. Soil washing and acid leaching technologies are more complicated, costly, and novel than solidification, but they have the potentially significant advantage of actually removing the lead from the soil, which should minimize the need for long-term monitoring and would eliminate the potential of any long-term leaching problems. The success or failure of acid leaching technology at the United Scrap Lead Site in Ohio is viewed as critical to the future acceptability of this technology for LBRS remediation.

Recycling of waste piles to reduce the volume of hazardous waste, and to recover lead, lead compounds, plastic, and hard rubber is a challenge that has continued to receive considerable attention. To date, large-scale recycling of defunct LBRS waste materials is not known to occur. A key site regarding recycling is the Gould site, Portland, OR where efforts are underway in separating and recycling of lead fines to a secondary smelter, plastic to a plastics recycler, and hard rubber-like material as a fuel supplement. Also important is the Tonolli site, Nesquehoning, PA where a full-scale treatability study is examining the feasibility of using hard rubber battery scraps as a fuel supplement in a nearby secondary lead smelter. Battery scraps from other defunct LBRS may be tested as well. For sites where lead leaching from slag is posing a health or environmental threat, a process (flame reactor) for recovering lead from slag and simultaneously converting the slag to a non-hazardous material (i.e.,

TCLP leachate < 5 mg/L lead) is undergoing testing in EPA's SITE Program. The flame reactor may also be applicable to lead contaminated soils. Within another several years, the use of acid leaching for cleaning and recovery of lead from battery cases may also be demonstrated at the United Scrap Lead site to be a viable option.

The selection of control technology for LBRS remediation is expected to remain an interesting and important remediation issue for the next several years.

Acknowledgement

This bulletin was prepared for the U.S. Environmental Protection Agency, Office of Emergency and Remedial Response (OERR) and the Office of Research and Development (ORD) by Foster Wheeler Enviresponse, Inc. (FWEI) under contract No.68-C9-0033. Mr. Michael D. Royer served as the EPA Work Assignment Manager. Dr. Ari Selvakumar was FWEI's Project Leader and primary author. Mr. Roger Gaire co-authored this bulletin.

References

Arniella, E. F. and L. J. Blythe. 1990. Solidifying Traps. Chemical Engineering. pp. 92-102.

Canonie Environmental. Undated. Information Sheet on Process for Remediating Lead Battery Sites.

Canonie Environmental. 1990. Marketing Studies Report for Gould, Inc., Portland, Oregon.

Federal Register. 1990. 40 CFR Parts 148 et al. Land Disposal Restrictions for Third Third Scheduled Wastes; Rule. U.S. Environmental Protection Agency, Washington, DC. pp.22567-22660.

PEI Associates, Inc. 1989. Lead Battery Site Treatability Studies. Contract No.68-03-3413. Submitted to Risk Reduction Engineering Laboratory, Edison, New Jersey.

Schmidt, B. William. 1989. Assessment of Treatment Techniques at Superfund Battery Sites. International Symposium on Hazardous Waste Treatment: Treatment of Contaminated Soils, Cincinnati, Ohio.

USEPA. 1982. Guide to Disposal of Chemically Stabilized and Solidified Waste. SW-872. U.S. Environmental Protection Agency Office of Solid Waste and Emergency Response, Washington, DC.

USEPA. 1985. Handbook, Remedial Action at Waste Disposal Sites (Revised). EPA/625/6-85/006. U.S. Environmental Protection Agency Office of Emergency and Remedial Response, Washington, DC.

USEPA. 1986a. Handbook for Stabilization/Solidification of Hazardous Wastes. EPA/540/2-86/001. Hazardous Waste Engineering Research Laboratory, Cincinnati, Ohio.

USEPA. 1986b. Mobile Treatment Technologies for Superfund Wastes. EPA/540/2-86/003(f). U.S. Environmental Protection Agency Office of Solid Waste and Emergency Response, Washington, DC.

USEPA. 1987a. A Compendium of Technologies Used in the Treatment of Hazardous Wastes. EPA/625/8-87/014. Center for Environmental Research Information, Office of Research and Development, Cincinnati, Ohio.

USEPA. 1987b. Technology Briefs: Data Requirements for Selecting Remedial Action Technology. EPA/600/2-87/001. Hazardous Waste Engineering Research Laboratory, Cincinnati, Ohio.

USEPA. 1989a. Stabilization/Solidification of CERCLA and RCRA Wastes: Physical Tests, Chemical Testing Procedures, Technology Screening, and Field Activities. EPA/625/6-89/022. Center for Environmental Research Information, Cincinnati, Ohio.

USEPA. 1989b. Guide for Conducting Treatability Studies under CERCLA. Interim Final. EPA/540/2-89/058. U.S. EPA Office of Solid Waste and Emergency Response, Washington, DC.

USEPA. 1989c. Superfund Treatability Clearinghouse Abstracts. EPA/540/2-89/001. U.S. Environmental Protection Agency Office of Emergency and Remedial Response, Washington, DC.

USEPA. 1990a. Memorandum from Henry L. Longest, Director, Office of Emergency and Remedial Response to Patrick M. Tobin, Director, Waste Management Division, Region IV, Cleanup Level for Lead in Groundwater. U.S. Environmental Protection Agency, Office of Emergency and Remedial Response, Washington, DC.

USEPA. 1990b. International Waste Technologies/Geo-Con In Situ Stabilization/Solidification, Applications Analysis Report. EPA/540/A5-89/004. U.S. Environmental Protection Agency, Office of Research and Development, Cincinnati, Ohio.

USEPA. 1990c. Treatment Technology Bulletin: Soil Washing Treatment. EPA/540/2-90/017. U. S. Environmental Protection Agency Office of Emergency and Remedial Response, Washington, DC.

USEPA. 1990d. Workshop on Innovative Technologies for Treatment of Contaminated Sediments. Summary Report. EPA/600/2-90/054. U.S. Environmental Protection Agency Office of Research and Development, Cincinnati, Ohio.

USEPA. 1991a. Memorandum from Don R. Clay, Assistant Administrator, Office of Solid Waste and Emergency Response on Update on Soil Lead Cleanup Guidance. U.S. Environmental Protection Agency, Office of Solid Waste and Emergency Response, Washington, DC.

USEPA. 1991b. Federal On-Scene Coordinators Report on Norco Battery Site Removal Action. U. S. Environmental Protection Agency, Region IX, California.

USEPA. 1991c. Demonstration Bulletin: Flame Reactor. EPA/540/M5-91/005. U.S. Environmental Protection Agency Office of Research and Development, Cincinnati, Ohio.

*U.S. Government Printing Office: 1992 — 648-080/60135

United States
Environmental Protection Agency
Center for Environmental Research Information
Cincinnati, OH 45268

Official Business
Penalty for Private Use
$300

EPA/540/S-92/011

Please make all necessary changes on the below label, detach or copy, and return to the address in the upper left-hand corner.

If you do not wish to receive these reports CHECK HERE ☐; detach, or copy this cover, and return to the address in the upper left-hand corner.

BULK RATE
POSTAGE & FEES PAID
EPA
PERMIT No. G-35