United States
Environmental Protection
Agency

EPA/540/SR-93/506
February 1994

EPA

SITE
SUPERFUND INNOVATIVE
TECHNOLOGY EVALUATION

Technology Demonstration Summary

CWM PO*WW*ER™ Evaporation–Catalytic Oxidation Technology

As part of the Superfund Innovative Technology Evaluation (SITE) program, the U.S. Environmental Protection Agency (EPA) demonstrated the Chemical Waste Management, Inc. (CWM), PO*WW*ER™ technology. The SITE demonstration was conducted in September 1992 at CWM's Lake Charles Treatment Center (LCTC) site in Lake Charles, LA. During the demonstration, the PO*WW*ER™ system treated landfill leachate contaminated with volatile organic compounds (VOC), semivolatile organic compounds (SVOC), metals, ammonia, cyanide, and other inorganic contaminants.

SITE demonstration results show that during treatment in the PO*WW*ER™ system, the volume of the landfill leachate was significantly reduced. A total solids (TS) concentration ratio of 32 to 1 was achieved. The SITE demonstration results also show that the PO*WW*ER™ system effectively removed sources of toxicity such as VOCs, SVOCs, metals, ammonia, and cyanide. Concentrations of VOCs and SVOCs in product condensate exiting the PO*WW*ER™ system were below their respective detection limits of 5 to 10 micrograms per liter (µg/L) and 10 to 130 µg/L. Product condensate contained trace levels of metals. Ammonia and cyanide concentrations in the product condensate samples were below their respective detection limits of 0.1 and 0.01 milligrams per liter (mg/L). The product condensate was nontoxic but only after it was cooled and its pH, dissolved oxygen level, and hardness or salinity were increased to meet demonstration objectives and as allowed in EPA acute toxicity testing procedures. Noncondensible vent gas emissions met proposed permit requirements for the LCTC site.

Data provided by CWM show that the PO*WW*ER™ technology can effectively treat the following wastes: (1) landfill leachate, (2) contaminated well water, (3) contaminated lagoon water, (4) fuels decant water, (5) oil emulsion wastewater, and (6) nitrogen-containing organic compounds wastewater. The PO*WW*ER™ technology also effectively treats the following contaminants: VOCs, SVOCs, pesticides, herbicides, solvents, heavy metals, ammonia, cyanide, nitrate, chloride, and sulfide.

This Summary was developed by EPA's Risk Reduction Engineering Laboratory (RREL) in Cincinnati, OH, to announce key findings of the SITE program demonstration that is fully documented in two separate reports (see ordering information at back).

Introduction

The SITE program was established in 1986 to accelerate the development, demonstration, and use of new and innovative

Printed on Recycled Paper

technologies that offer permanent cleanup solutions for hazardous waste sites. The SITE program is administered by the EPA Office of Research and Development RREL. One component of the SITE program is the demonstration program, which develops reliable performance and cost data on innovative technologies so that potential users can assess a technology's suitability for specific site cleanups.

The PO*WW*ER™ technology SITE demonstration was conducted at the CWM LCTC in Lake Charles, LA, in September 1992. The PO*WW*ER™ pilot-scale plant at LCTC has been operative since 1988. The pilot plant is used primarily as a demonstration unit for parties interested in testing the system's applicability for treating specific aqueous wastes.

The technology demonstration had the following objectives:

- Evaluate the technology's ability to concentrate and reduce the volume of an aqueous waste to brine for further treatment or disposal
- Evaluate the technology's ability to remove organic and inorganic contaminants from landfill leachate
- Evaluate the technology's ability to produce a noncondensible gas stream that meets proposed permit requirements for the LCTC site
- Evaluate the technology's ability to produce a condensate stream non-toxic to aquatic organisms
- Document the PO*WW*ER™ system's operating conditions and identify potential operational problems
- Develop the technology's capital and operating costs for use in the Superfund decision-making process

Technology Description

The PO*WW*ER™ system reduces the volume of an aqueous waste and catalytically oxidizes volatile contaminants. Figure 1 shows a flow diagram of the PO*WW*ER™ pilot scale plant, which was used during the SITE demonstration. The PO*WW*ER™ system consists primarily of an evaporator to reduce the influent wastewater volume, a catalytic oxidizer to oxidize the volatile contaminants in the vapor stream from the evaporator, a scrubber to remove acid gases produced during oxidation, and a condenser to condense the vapor stream leaving the scrubber.

The evaporator consists of three main pieces of equipment: the heat exchanger, the vapor body, and the entrainment separator. As feed waste is pumped to the evaporator, it combines with heated process liquor. The feed waste is then further heated in a vertical shell-and-tube heat exchanger, before entering the vapor body, where boiling occurs and vapor is released. A portion of the concentrated brine is removed from the vapor body when the brine temperature reaches a value corresponding to a specific brine boiling point. The remaining brine is recirculated. Vapor exits the vapor body to an entrainment separator, which removes water droplets.

Vapor from the evaporator is heated to oxidation temperature by a direct-fired propane burner. In the PO*WW*ER™ pilot plant, air is fed to the system by a compressor. The heated vapor then enters the catalytic oxidizer and passes through the catalyst bed where oxidation takes place.

After oxidation, the vapor stream exits the catalytic oxidizer and passes through a wet scrubber to neutralize the acid gases produced in the oxidizer. The scrubber consists of a packed bed in which the vapor passes countercurrently through caustic solution.

Vapor exiting the scrubber is cooled and condensed in a shell-and-tube condenser. The product condensate is collected in a condensate holding tank where it remains until it is transferred to a stainless steel product tank. This product condensate can either be reused as boiler or cooling tower makeup water, or discharged to surface water, if appropriate.

Technology Testing

The demonstration was conducted under one set of operating parameters, which were established by CWM based on previous operating experience with the

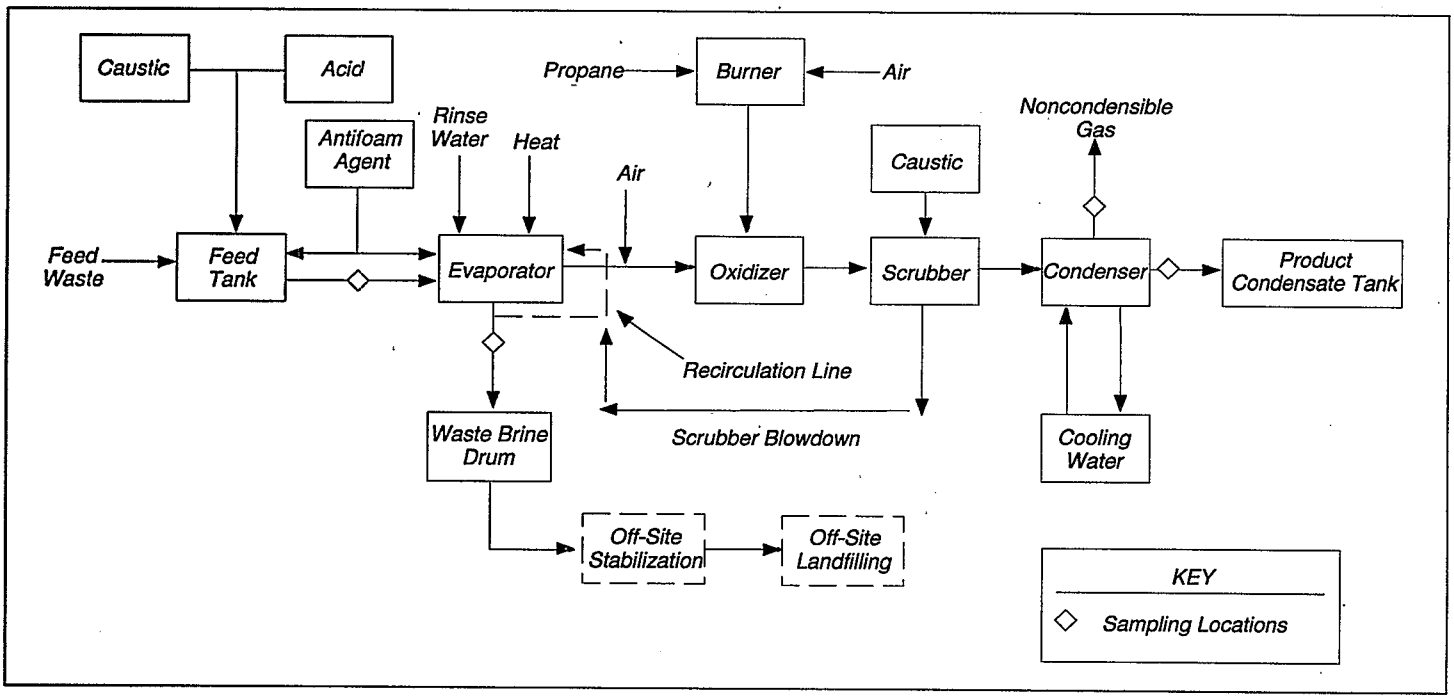

*Figure 1. Schematic diagram showing sampling locations for the PO*WW*ER™ pilot plant.*

PO*WW*ER™ system. These operating parameters were applied in two sets of test runs: one set of three replicate test runs using unspiked LCTC landfill leachate and one set of three replicate test runs using spiked LCTC landfill leachate. The landfill leachate, an F039 hazardous waste, was spiked with the following compounds: 100 mg/L each of methylene chloride, tetrachloroethene (PCE), and toluene; 10 mg/L of phenol; 2 mg/L of cadmium; 0.2 mg/L of mercury; and 50 mg/L each of copper, nickel, and iron. The purpose of spiking the feed waste was to test the effect of contaminant loading on the PO*WW*ER™ system's performance.

Each demonstration test required about 9 hr of PO*WW*ER™ system operation to conduct sampling and monitoring activities. During the tests, landfill leachate was processed at an average rate of 0.18 gallons per minute (gpm).

Sampling began when the PO*WW*ER™ system operated under steady-state conditions. During each test run, samples were collected from the feed waste, product condensate, brine, and noncondensible gas stream. Feed waste, product condensate, and brine samples were analyzed for total suspended solids (TSS), total dissolved solids (TDS), VOCs, SVOCs, ammonia, cyanide, metals, chloride, sulfate, nitrate, pH, oil and grease, total organic halides (TOX), and total organic carbon (TOC). Samples of feed waste and product condensate were also analyzed for acute toxicity. Brine samples were also analyzed for toxicity characteristic leaching procedure (TCLP) metals, VOCs, and SVOCs. Continuous emissions monitoring (CEM) of the noncondensible gas stream included monitoring for carbon monoxide (CO), sulfur dioxide (SO_2), nitrogen oxides (NO_x), and total nonmethane hydrocarbons (TNMHC). Noncondensible gas samples were also collected and analyzed for VOCs, SVOCs, and hydrochloric acid (HCl).

Critical analytes for the feed waste and product condensate included TSS, TDS, VOCs, SVOCs, ammonia, cyanide, and acute toxicity, which was a critical analyte only for the product condensate. Critical analytes for the brine were TSS and TDS. Critical analytes for the noncondensible gas stream were CO, SO_2, and NO_x.

Demonstration Results

Demonstration results are based on extensive laboratory analyses. The following sections discuss critical parameters, noncritical parameters, PO*WW*ER™ system reliability, and an economic analysis.

During the SITE demonstration, CWM imposed testing and monitoring limitations that restricted data collection for the evaluation of the PO*WW*ER™ system's performance. These limitations were imposed to protect CWM's proprietary know-how of the PO*WW*ER™ system.

Critical Parameters

Critical parameters for the demonstration were volume reduction, VOC removal, SVOC removal, ammonia and cyanide removal, acute toxicity, and noncondensible gas emissions. These parameters are discussed below.

Volume Reduction

During each 9-hr test run, the PO*WW*ER™ system processed about 98 gal of feed waste. Brine was wasted and sampled only once during each 9-hr test period. The total amount of brine wasted during each 9-hr test run was about 4.8 gal, or about 5% of the total feed waste volume.

The PO*WW*ER™ system's effectiveness for volume reduction was evaluated based on the concentration ratio, which is defined as the ratio of the TS concentration in the brine over the TS concentration in the feed waste. The TS concentration is the sum of the TSS and TDS concentrations. The TS concentration ratio was estimated to be about 31 to 1 during the unspiked tests and 32 to 1 during the spiked tests. Similar results were obtained for metal and chloride concentration ratios. The average TS, metal, and chloride concentration ratios were statistically the same. Therefore, these concentration ratios are considered to represent a reliable measure of feed waste volume reduction achieved by the PO*WW*ER™ system during the SITE demonstration.

VOC Removal

The PO*WW*ER™ system removes VOCs from the feed waste by evaporation. VOCs are subsequently oxidized in the catalytic oxidizer. Acetone, 2-butanone, methylene chloride, PCE, toluene, and vinyl chloride were identified as critical VOCs for the SITE demonstration. Vinyl chloride is not discussed further because it was not detected during unspiked and spiked test runs in feed waste, product condensate, or brine.

The results in Table 1 show that during the unspiked and spiked test runs, the concentrations of all critical VOCs, except for methylene chloride, in the product condensate were below their respective detection limits (5 to 10 µg/L). Methylene chloride was detected in the product condensate only during the second unspiked test run at a concentration of 6 µg/L. In addition, the results show that total contaminant loading, which increased during the spiked test runs, had no measurable effect on the quality of product condensate under the conditions tested. However, total contaminant loading appeared to have some effect on VOC evaporation efficiency. For example, during the unspiked test runs, the acetone and methylene chloride concentrations in brine samples were less than their respective detection limits of 100 and 50 µg/L for most samples analyzed. However, during the spiked test runs, these contaminants were not completely removed from the brine. Acetone and methylene chloride concentrations in brine samples ranged from 180 to 220 µg/L and 110 to 200 µg/L, respectively.

SVOC Removal

Benzoic acid and phenol were identified as critical SVOCs for the SITE demonstration. The results in Table 2 show that during the unspiked and spiked test runs, benzoic acid and phenol concentrations in product condensate were less than their detection limits, which ranged from 25 to 130 µg/L and from 10 to 50 µg/L, respectively. The results also indicate that benzoic acid remained primarily in the brine, while phenol was removed from the brine, at least partially, and was presumably oxidized.

Although benzoic acid and phenol are both acidic compounds, they have very different physical-chemical properties. Given these properties, phenol is more likely than benzoic acid to be removed from the brine. Phenol has a vapor pressure over 30 times greater than that of benzoic acid. Also, under the test conditions, phenol was likely present in the brine primarily in unionized form while benzoic acid was likely present in ionized form.

Other factors that may have affected the removal of phenol from the brine include the brine's boiling point rise (BPR), stripping action of steam, and ionic strength. While phenol has a boiling point of 358 °F, significantly higher than the steam temperature used for heating in the evaporator heat exchanger, the evaporation of phenol can take place in the evaporator because of the increase in the brine's boiling point, which is known as the BPR, and the stripping action of steam released during boiling. Another condition that could have

Table 1. *Average Critical VOC Concentrations Dudng Unspiked and Spiked Test Runs*

	Unspiked Test Runs			Spiked Test Runs		
Run No.	Feed Waste	Product Condensate	Brine[a]	Feed Waste	Product Condensate	Brine[a]
			Acetone (µg/L)			
1	11,000 M[b]	<10[c]	<100	13,000 M	<10 M	220 M
2	8,700 M	<6[f]	<100	13,000 M	<10M	180 M
3	9,100 M	<10	140	17,000 M	<10M	180 M
			2-Butanone (µg/L)			
1	2, 100	<10	<100	<10,000	<10	<100 M
2	1,500	<10	<100	<3,500	<10	<100 M
3	1,800	<10	<100	<7,700	<10	<100 M
			Methylene Chloride (µg/L)			
1	1,100	<5	<50	110,000 C[d]	<5	190
2	1,100	6	<50	91,000 C	<5	110
3	690	<5	<50	97,000 C	<5	200 C
			PCE (µg/L)			
1	<390	<5	<50	53,000 M	<5	69 M
2	<500	<5	<50	49,000 M	<5	46(50)[e] M
3	<500	<5	<50	55,000 M	<5	34(50) M
			Toluene (µg/L)			
1	390 (500)	<2[f]	<50	66, 000	<5	49(50)
2	350 (500)	<5	<50	52,000	<5	49(50)
3	400 (500)	<5	<50	53,000	<5	37(50)

[a] *Brine was wasted and sampled once per test run. Therefore, the reported results represent analysis of one sample. However, the results for feed waste and product condensate represent the average of three composite samples collected during each run.*
[b] *M indicates that the analyte concentration was estimated, because precision and accuracy criteria were not met.*
[c] *<= Analyte not detected at the quantitation limit shown.*
[d] *C indicates that analyte concentration is estimated because calibration criteria was not met.*
[e] *Analyte detected at an estimated concentration below the quantitation limit shown in parentheses.*
[f] *These values do not represent a quantitation limit; the quantitation limit for acetone in product condensate was 10 µg/L, and for toluene in product condensate, it was 5 µg/L. These values represent the average of concentrations estimated below the quantitation limit and at the quantitation limit as well.*

Table 2. *Average Critical SVOC Concentrations During Unspiked and Spiked Test Runs*

	Unspiked Test Runs			Spiked Test Runs		
Run No.	Feed Waste	Product Condensate	Brine[a]	Feed Waste	Product Condensate	Brine[a]
			Benzoic Acid (µg/L)			
1	16,000 M[b]	<25[c]	600,000 H[d]	23,000	<130	620,000 H
2	17,000 M	<130	690,000	14,000	<99[e]	800,000 H
3	12,000 M	<25	1,600,000	17,000	<95[e]	930,000 H
			Phenol (µg/L)			
1	9,100 M	<10	<200,000 H	17,000 M	<50	<200,000 H
2	10,000 M	<50	<200,000	13,000 M	<37[e]	<200,000 H
3	6,000 M	<10	<200,000	13,000 M	<37[e]	<200,000 H

[a] *Brine was wasted and sampled once per test run. Therefore, the reported results represent analysis of one sample. However, the results for feed waste and product condensate represent the average of three composite samples collected during each run.*
[b] *M indicates that the analyte concentration was estimated, because precision and accuracy criteria were not met.*
[c] *<= Analyte not detected at the quantitation limit shown*
[d] *H indicates that analyte concentration is estimated because sample holding time was exceeded.*
[e] *This value represents the average of three quantitation limits, at least one of which differs from the other two.*

caused the evaporation of phenol is the "salting-out effect" caused by the increased ionic strength of the brine.

Ammonia and Cyanide Removal

Ammonia and cyanide evaporation efficiency depends on the types of metals present and feed waste pH. Under certain conditions, the PO*WW*ER™ system vaporizes ammonia and cyanide in the evaporator and effectively oxidizes both in the catalytic oxidizer. Ammonia forms complexes with cadmium, cobalt, copper, silver, mercury, nickel, and zinc. Cyanide forms complexes with cadmium, copper, silver, mercury, iron, nickel, and zinc. All the above-mentioned metals were present in feed waste samples during unspiked and spiked test runs. Metal complexes of ammonia and cyanide need to be destroyed before cyanide and ammonia can be evaporated and oxidized. Free ammonia volatilizes effectively at pH values greater than 9, whereas free cyanide volatilizes effectively at pH values less than 9.

The concentrations of ammonia and cyanide in product condensate were less than their respective detection limits of 0.1 and 0.01 mg/L for all samples analyzed. These results indicate that total contaminant loading, which increased during the spiked test runs, had no measurable adverse effect on product condensate quality (see Table 3).

The results also indicate that during the unspiked and spiked test runs, ammonia and cyanide were not completely removed from the brine, possibly because the feed waste pH of about 9 was close to the lower optimum pH range for ammonia volatilization and close to the upper optimum range for cyanide volatilization. Also, ammonia and cyanide may have not been completely removed due to metals complexation.

Acute Toxicity

The ability of the PO*WW*ER™ technology to remove sources of feed waste toxicity and produce nontoxic product condensate was evaluated by testing the acute toxicity of product condensate and feed waste. Four different test organisms were used: *Ceriodaphnia dubia*, *Pimephales promelas*, *Mysidopsis bahia*, and *Cyprinodon variegatus*. Acute toxicity results were evaluated using the median lethal concentration (LC50). The LC50 represents the sample concentration, expressed as a percentage, that is lethal to 50% of the test organisms.

Table 3. *Average Ammonia and Cyanide Concentrations During Unspiked and Spiked Test Runs*

Run No.	Unspiked Test Runs: Feed Waste	Unspiked Test Runs: Product Condensate	Unspiked Test Runs: Brine[a]	Spiked Test Runs: Feed Waste	Spiked Test Runs: Product Condensate	Spiked Test Runs: Brine[a]
			Ammonia (mg/L)			
1	150	<0.10[b]	5.4	160 H[c]	<0. 10 H	7.8 H
2	150	<0.10	23 H	150 H	<0.10 H	7.5 H
3	160	<0.10	11	140	<0.10	7.4
			Cyanide (mg/L)			
1	29	<0.01	77	33	<0.01	36
2	33	<0.01	150	32	<0.01	17
3	30	<0.01	140	24	<0.01	77

[a] *Brine was wasted and sampled once per test run. Therefore, the reported results represent analysis of one sample. However, the results for feed waste and product condensate represent the average of three composite samples collected during each run.*
[b] *< = Analyte not detected at the quantitation limit shown.*
[c] *H indicates that analyte concentration is estimated because sample holdng time was exceeded.*

Two test conditions were evaluated. Under test condition 1, feed waste and product condensate samples were adjusted to pH, temperature, and hardness or salinity levels optimum for survival of the test organisms. Under test condition 2, all abovementioned conditions were adjusted except hardness. Only product condensate samples were tested under test condition 2, with *Ceriodaphnia dubia* and *Pimephales promelas* as test organisms. Tests under test condition 2 were conducted to examine the effect of hardness on the toxicity of product condensate.

The results indicate that the PO*WW*ER™ system removed sources of toxicity in feed waste. Feed waste was highly toxic to all test organisms, with LC50 values consistently less than 10%. Product condensate, however, was found to be nontoxic with all LC50 values statistically greater than 100%, but only after the product condensate was cooled and its pH, hardness, and salinity were adjusted to meet demonstration objectives and as allowed in EPA acute toxicity testing procedures.

Noncondensible Gas Emissions

CEM of the noncondensible gas was conducted for CO, SO_2, NO_x, and TNMHC. Average and maximum concentrations and emission rates are summarized in Table 4. Noncondensible vent gas samples were collected and analyzed for VOCs, SVOCs, and HCl. The following VOCs were detected: chloromethane, bromomethane, methylene chloride, acetone, 1,1,1-trichloroethane, carbon disulfide, 2-butanone, benzene, PCE, toluene, chlorobenzene, and ethylbenzene. The critical VOC present in the noncondensible gas at the highest concentration was PCE. All other VOCs were present at trace levels. The highest PCE concentration occurred during the first spiked test run, which also had the highest CO, SO_2, NO_x, and TNMHC concentrations. HCl and some SVOCs were also detected in the noncondensible gas. The following SVOCs were present at trace levels in the noncondensible gas: phenol, benzoic acid, bis-(2-ethylhexyl) phthalate, and di-n-octylphthalate.

Noncondensible gas emissions results indicate that increases in total contaminant loading may result in small increases in contaminant concentrations in the vent gas.

Table 4. *Noncondensible Gas Average and Maximum Contaminant Concentrations and Mass Emissions Rates*

Contaminant	Unspiked Test Runs 1	Unspiked Test Runs 2	Unspiked Test Runs 3	Spiked Test Runs 1	Spiked Test Runs 2	Spiked Test Runs 3
Average[a] CO (ppmv)[b]	21.4	9.58	13.9	37.3	24.6	18.7
Average CO (lb/hr)[c]	0.00217	0.00110	0.00151	0.00392	0.00244	0.00169
60-min RA[d] Maximum CO (ppmv)	22.5	11.1	15.4	40.8	26.5	19.8
60-min RA Maximum CO (lb/hr)	0.00228	0.00127	0.00166	0.00428	0.00263	0.00179
Average SO_2 (ppmv)	<[e]	<2	<2	<2	<2	<2
Average SO_2 (lb/hr)	<0.00049	<0.00055	<0.00052	<0.00051	<0.00048	<0.00043
60-min RA Maximum SO_2 (ppmv)	2.40	<2	<2	3. 49	2.87	<2
60-min RA Maximum SO_2 (lb/hr)	0.00056	<0.00055	<0.00052	0.00084	0.00065	<0. 00043
Average NO_x (ppmv)	242	260	243	292	255	233
Average NO_x (lb/hr)	0. 0404	0. 0491	0. 0432	0.0503	0.0417	0. 0346
60-min RA Maximum NO_x (ppmv)	253	275	254	309	280	241
60-min RA Maximum NO_x (lb/hr)	0.0421	0.0519	0.0452	0.0534	0.0458	0.0359
Average TNMHC (ppmv)	<2	<2	<2	<2	<2	<2
Average TNMHC (lb/hr)	<0.00033	<0.00037	<0.00035	<0.00037	<0.00032	<0.00029
60-min RA Maximum TNMHC (ppmv)	<2	<2	<2	3.95	3.54	2.53
60-min RA Maximum TNMHC (lb/hr)	<0.00033	<0.00037	<0.00035	0.00067	0.00057	0.00038

[a] *Average pollutant concentrations are calculated as the time-weighted average of each sampling period.*
[b] *ppmv = Parts per million by volume*
[c] *lb/hr = Pounds per hour*
[d] *Maximum pollutant concentrations are calculated as the maximum 60-min rolling average (RA) concentration observed during each sampling period.*
[e] *< = Analyte not detected at the quantitation limit shown*

Noncritical Parameters

Noncritical parameters include metals; chloride; sulfate; nitrate; pH; oil and grease, TOX, and TOC; and TCLP metals, VOCs, and SVOCs. These noncritical parameters are discussed below.

Metals

During unspiked and spiked test runs, metals concentrated primarily in the brine. Concentration ratios ranged from 31 to 1 to 35 to 1 during unspiked test runs and from 29 to 1 to 31 to 1 during spiked test runs. However, during the test runs, trace levels of the following metals were also present in the product condensate: chromium, copper, iron, manganese, nickel, and zinc.

Chloride

During unspiked and spiked test runs, chloride concentrated primarily in the brine. Concentration ratios ranged from 32 to 1 to 35 to 1 during unspiked test runs and from 28 to 1 to 33 to 1 during spiked test runs. Chloride was not detected in product condensate samples. Because HCl was detected in noncondensible gas emissions but not in product condensate samples, the results suggest that HCl was formed in the oxidizer during the SITE demonstration and was only partially removed by the scrubber.

Sulfate

The results show that sulfate concentrated in the brine with an average concentration ratio of 15.5 to 1, almost one half of the TS, chloride, and metals concentration ratios. The reason for the difference could be due to sulfate in the brine precipitating as metal sulfate salts. These salts could have deposited on the evaporator surfaces and in the brine transfer piping instead of being collected in the brine samples.

Nitrate

During unspiked and spiked test runs, nitrate concentrations in feed waste and brine were less than their respective detection limits of 0.05 and 5 mg/L for most samples analyzed. However, nitrate was detected in product condensate. During unspiked test runs, nitrate concentrations in product condensate ranged from 0.23 to 0.37 mg/L. During spiked test runs, nitrate concentrations in product condensate ranged from 0.44 to 0.68 mg/L. Nitrate in product condensate could have resulted from the hydrolysis of NO_2. Three sources of nitrogen that may have contributed to the formation of NO_2 during oxidation in the catalytic oxidizer are ammonia, air, and cyanide.

pH

During unspiked and spiked test runs, the pH of feed waste was about 9 and the pH of brine was about 10. The pH of feed waste was not adjusted during the SITE demonstration. The pH of product condensate ranged from 3.8 to 4.3 during unspiked test runs and from 4.0 to 4.2 during spiked test runs. The acidic pH of product condensate may have been because of the presence of nitric acid formed by the hydrolysis of NO_2.

Oil and Grease, TOX, and TOC

The results indicate that some of the material contributing to oil and grease in the feed waste is removed during treatment in the PO*WW*ER™ system. During unspiked and spiked test runs, oil and grease removal efficiencies were greater than 76%.

During unspiked and spiked test runs, TOX primarily concentrated in the brine, with average concentration ratios of 32 to 1 and 28 to 1, respectively. These ratios suggest that TOX is comprised of halogenated nonvolatile organic compounds.

During unspiked and spiked test runs, TOC evaporation efficiencies were greater than 93%.

TCLP Metals

TCLP test results for metals indicate that brine, which is an F039-derived hazardous waste, exhibits the D004 hazardous waste characteristic because it contains TCLP arsenic at concentrations ranging from 34,400 to 103,000 µg/L. These concentrations are greater than the regulatory level of 5,000 µg/L. All other TCLP metals met the Resource Conservation and Recovery Act (RCRA) regulatory requirements.

TCLP VOCs and SVOCs

Both TCLP VOCs and SVOCs met the RCRA TCLP standards. The results show that total contaminant loading, which increased during the spiked test runs, resulted in increased TCLP VOC concentrations. However, contaminant loading did not have a significant effect on TCLP SVOCs.

PO*WW*ER™ System Reliability

Generally, the PO*WW*ER™ system operated reliably during the SITE demonstration. During startup, the PO*WW*ER™ system required about 9 days to reach steady-state conditions because of the low solids content in the feed waste. The following operational observations were made:

- A 1-hr area-wide electrical power outage caused the temperature in the evaporator to drop, resulting in a 5-hr delay until the system returned to steady-state operation.
- During the power outage, the evaporator circulation pump shaft was manually rotated to prevent solids from settling in the piping.
- The brine sampling line became clogged with solids, limiting brine sampling until a new sampling location was made available.

These are minor operational problems that do not affect the system's reliability but should be considered in the design of a full-scale PO*WW*ER™ system.

Economic Analysis

Economic data indicate that the capital cost for a 50-gpm PO*WW*ER™ system is approximately $4 million on a turnkey basis, including treatability study costs; design costs; all necessary components of a PO*WW*ER™ system; all interconnecting piping, controls, and monitoring equipment; and assembly and installation costs. Annual operating and maintenance, including labor, consumables, utilities, analytical services, and waste disposal, at a Superfund site are estimated to be about $3.3 million. Waste (brine) disposal costs account for about 70% of the annual costs. At an annual inflation rate of 5%, the total cost of a project lasting 15 yr was estimated to be about $100 per 1,000 gal of aqueous waste treated, and the total cost of a project lasting 30 yr was estimated to be about $73 per 1,000 gal of aqueous waste treated.

Conclusions

The following conclusions about the PO*WW*ER™ technology are based on the results of the SITE demonstration:

- The volume of brine wasted and sampled during each 9-hr test period consisted of about 5% of the feed waste volume processed. The concentration ratio, defined as the ratio of TS concentration in the brine over the TS concentration in the feed waste, was about 32 to 1.
- Feed waste average concentrations of critical VOCs ranged from 350 to 110,000 µg/L; critical SVOCs ranged from 6,000 to 23,000 µg/L; ammonia ranged from 140 to 160 mg/L;

and cyanide ranged from 24 to 33 mg/L. Generally, no VOCs, SVOCs, ammonia, or cyanide were detected in the product condensate.

- Noncondensible gas emissions had the following characteristics: (1) average CO concentrations ranged from 9.58 to 37.3 ppmv, resulting in emission rates ranging from 1.1×10^{-3} to 3.92×10^{-3} lb/hr; (2) average SO_2 concentrations were less than 2 ppmv, resulting in emission rates of less than 5.5×10^{-4} lb/hr; and (3) the average NO_x concentrations ranged from 233 to 292 ppmv, resulting in emission rates ranging from 3.46×10^{-2} to 5.03×10^{-2} lb/hr. Noncondensible gas emissions for these parameters met the proposed regulatory requirements for the LCTC site.
- Contaminant loading, which increased during the spiked test runs, had a measurable effect on VOC evaporation efficiency. Also, increased contaminant loadings resulted in small increases in contaminant concentrations in the noncondensible vent gas.
- The PO*WW*ER™ system removes sources of feed waste toxicity. The feed waste was acutely toxic with LC50s consistently below 10%. The product condensate was nontoxic with LC50s consistently greater than 100%, but only after the product condensate was cooled and its pH, dissolved oxygen level, and hardness or salinity were increased to meet demonstration objectives and as allowed in EPA acute toxicity testing procedures.
- Metals, sulfate, chloride, and TOX concentrated in the brine. The average metals, chloride, and TOX concentration ratios are almost identical to the TS concentration ratios. The sulfate concentration ratio was significantly lower, probably due to sulfate in the brine precipitating as metal sulfate salts. These salts could have deposited on the evaporator surfaces and in the brine transfer piping instead of being collected in the brine samples.
- Nitrate, which was not present in the feed waste and brine, was present in product condensate. Nitrate probably formed in the product condensate as a result of the hydrolysis of NO_2, which was formed during oxidation in the catalytic oxidizer. The acidic pH of the product condensate supports this hypothesis.
- TOC evaporation efficiency was greater than 93% during the unspiked and spiked test runs. Compounds that contribute to oil and grease were removed from the feed waste and brine with removal efficiencies of greater than 76%.
- The F039-derived hazardous waste brine exhibits the D004 hazardous waste characteristic because it contains TCLP arsenic at concentrations greater than the regulatory level of 5,000 µg/L. All other TCLP metals, VOCs, and SVOCs met the RCRA regulatory requirements.
- The PO*WW*ER™ system operated reliably during the demonstration. However, some minor operational problems were observed during shakedown and startup operations, and during the SITE demonstration. Operational problems included an area-wide electrical power outage and brine sampling line clogging.
- Economic data indicate that the capital cost for a 50-gpm PO*WW*ER™ system is approximately $4 million on a turnkey basis. Annual operating and maintenance costs at a Superfund site are estimated to be about $3.3 million. At an annual inflation rate of 5%, the total cost of a project lasting 15 yr was estimated to be about $100 per 1,000 gal of aqueous waste treated, and the total cost of a project lasting 30 yr was estimated to be about $73 per 1,000 gal of aqueous waste treated.

☆U.S. GOVERNMENT PRINTING OFFICE: 1994 - 550-067/80242

*The EPA Project Manager, **Randy Parker**, is with the Risk Reduction Engineering Laboratory, Cincinnati, OH 45268 (see below).*
*The complete report, entitled "Technology Evaluation Report: CWM; PO*WW*ER™ Evaporation-Catalytic Oxidation Technology" consists of two volumes:*
"Volume I" (Order No. PB94-156239AS; Cost $27.00, subject to change)
"Volume II" (Order No. PB94-156247AS; Cost $61.00, subject to change)
both will be available only from:
National Technical Information Service
5285 Port Royal Road
Springfield, VA 22161
Telephone: 703-487-4650
*A related report, entitled: "CWM; PO*WW*ER™ Evaporation-Catalytic Oxidation Technology; Applications Analysis Report" EPA/540/AR-93/506, is available.*
The EPA Project Manager can be contacted at:
Risk Reduction Engineering Laboratory
U.S. Environmental Protection Agency
Cincinnati, OH 45268

*Inquiries about the PO*WW*ER™ technology should be directed to:*
Annamarie Connolly
ARI Technologies Inc.
1501 E. Woodfield Road
Suite 200 West
Schaumburg, IL 60173
Telephone: 708-706-6900
Fax: 708-706-6996

United States
Environmental Protection Agency
Center for Environmental Research Information
Cincinnati, OH 45268

BULK RATE
POSTAGE & FEES PAID
EPA
PERMIT No. G-35

Official Business
Penalty for Private Use $300

EPA/540/SR-93/506