United States
Environmental Protection
Agency

Office of
Solid Waste and
Emergency Response

Publication 9240.1-19
EPA/540/R/94/086
PB95-963523
December 1994

Superfund

EPA

USEPA CONTRACT LABORATORY PROGRAM

DRAFT STATEMENT OF WORK FOR QUICK TURNAROUND ANALYSIS

9240.1-19
PB95-963523
EPA540/R-94/086

DRAFT

USEPA CONTRACT LABORATORY PROGRAM

DRAFT STATEMENT OF WORK

FOR

QUICK TURNAROUND ANALYSIS

8/94

U.S. Environmental Protection Agency
Region 5, Library (PL-12J)
77 West Jackson Boulevard, 12th Floor
Chicago, IL 60604-3590

DRAFT

STATEMENT OF WORK

TABLE OF CONTENTS

EXHIBIT A: SUMMARY OF REQUIREMENTS

EXHIBIT B: REPORTING AND DELIVERABLES REQUIREMENTS

EXHIBIT C: QTM TARGET COMPOUND LIST (QTCL) AND CONTRACT REQUIRED QUANTITATION LIMITS (CRQL)

EXHIBIT D: ANALYTICAL METHODS

EXHIBIT E: QUALITY ASSURANCE/QUALITY CONTROL REQUIREMENTS

EXHIBIT F: CHAIN-OF-CUSTODY, DOCUMENT CONTROL, AND STANDARD OPERATING PROCEDURES

EXHIBIT G: GLOSSARY OF TERMS AND ACRONYM LIST

EXHIBIT H: DATA DICTIONARY AND FORMAT FOR DATA DELIVERABLES IN COMPUTER-READABLE FORMAT

TABLE OF CONTENTS

		Page
SECTION I:	Overview	A-3
SECTION II:	General Requirements	A-7
SECTION III:	Specific Requirements	A-9
SECTION IV:	Detailed Technical and Management Requirements	A-19

SECTION I

OVERVIEW

The purpose of this Quick Turnaround Statement of Work (SOW) is to provide analytical methods and associated quality control (QC) procedures and criteria that will result in the rapid analysis of hazardous waste samples and the generation of data of known and documented quality for use by the United States Environmental Protection Agency (EPA). EPA will use these data to answer questions and make decisions relating to the characterization and clean-up of sites contaminated with chemicals that pose significant risks to public health and the environment. The analytical method turnaround times are designed to meet client needs when activities on site are awaiting a quick answer. Under this contract, laboratories are required to analyze and report data from a maximum of 30 fractional sample analyses per day for a maximum of three different fractions (e.g., phenols, volatiles, and pesticides), and report the electronic summary data within 48 hours after Validated Time of Sample Receipt (VTSR) and hardcopy data within seven days after VTSR. If analyses for more than three fractions are requested for a given Batch of samples at the time of sample scheduling, the Contractor Laboratory shall report the electronic summary data for all fractions within 72 hours after VTSR and report the hardcopy data within eight days after VTSR. If the Laboratory receives more than 30 fractional sample analyses in a given day, then the fractional samples analyses that exceed the 30 (e.g., five if 35 fractional sample analyses were received) would be considered a separate Batch, and the VTSR would be 8 a.m. the following day. Analytical data generated under this SOW shall be made available to EPA personnel on site, at EPA Regional offices, or to designated contractors according to the following schedule:

- Electronic data -- within 48 hours after VTSR if three or fewer fractional analyses are performed for a given Batch of samples.

  -- within 72 hours after VTSR if more than three fractional analyses are performed for a given Batch of samples.

- Hardcopy data -- within seven days after VTSR if three or fewer fractional analyses are performed for a given Batch of samples.

  -- within eight days after VTSR if more than three fractional analyses are performed for a given Batch of samples.

- Preliminary Form I results via telefacsimile (fax) or telephone (if requested during the scheduling and sample receipt process) -- preliminary Form I analytical results for 1-10 fractional sample

analyses within 24 hours after VTSR. These are limited to a maximum of five (5) requests per seven calendar days.

- Preliminary raw data results if requested before receipt of hardcopy data -- within four hours after request.

Analytical data generated under this SOW will be used to answer questions and make decisions during all phases of the Superfund site inspection, site characterization, and remediation process. This SOW can be used, therefore, for site inspections, site characterizations, treatability studies, engineering designs, remedial actions, time-critical removal assessments and removals, and non-time-critical removal assessments and removals.

During the site inspection phase, a site is assessed to determine if it should be placed on the National Priorities List (NPL) of hazardous waste sites. During the site characterization phase, the three-dimensional extent of contamination is usually investigated. During remediation, the most appropriate remedial technology is chosen for site cleanup, a treatability test using the technology may be performed, the cleanup remedy is designed, and site cleanup is then accomplished. During all of these phases, including site discovery, the potential for emergency removal actions exist.

Each phase, including emergency removal activities, requires rapid turnaround of certain analytical data for the Superfund program to operate most effectively. Since it usually takes many samples to characterize the extent of contamination, determine the cleanup technology, determine when the site has been cleaned to acceptable contaminant levels, and perform monitoring analyses, it is anticipated that this SOW will be used frequently for these activities, as well as for identifying critical samples for confirmatory analysis.

It should be noted, however, that this SOW is not a substitute for the Multi-Media, Multi-Concentration Statement of Work (SOW) for Organics Analysis, which requires different analytical methods, QC, documentation, and data turnaround time. The analytical methods and their associated QC requirements as outlined in this SOW have been especially designed for rapid turnaround of analytical data and are not to be used in place of the analytical methods outlined in the Multi-Media, Multi-Concentration SOW for Organics Analysis.

This SOW is designed to generate analytical data for monitoring the presence of frequently occurring organic compounds, to aid in assessing the extent of contamination, and to monitor cleanup technologies for effectiveness. It is also designed to generate both qualitative and quantitative analytical data. As a result, the analytical methods and the QC requirements have been designed to minimize Contractor time and effort per sample while still providing data users with analytical data of known quality.

Because these analytical methods do not involve the qualitative confirmation of the presence of target compounds, the compound class (e.g., polynuclear

aromatic hydrocarbons) or compound(s) of interest (e.g., benzopyrene) for a site should already be known from previous assessments. General instances for which this SOW may be appropriate include, but are not limited, to the following activities.

- Directing sampling efforts.
- Screening sites for organic contaminants (presence/absence).
- Provision of target compound-specific analyses (identification and quantitation).
- Identifying the most appropriate or critical samples for confirmatory analysis.
- Monitoring presence of target compounds.
- Optimizing analysis conditions (e.g., dilutions, extract clean-up) for confirmatory analysis.
- Whenever activities on-site require a quick answer.
- Whenever on-site feedback is required.
- Interim decisions regarding site contamination and cleanup.

Specific instances for which this SOW may be appropriate include but are not limited to the following activities.

Screening activities

- Identification of contaminated and potentially uncontaminated locations.
- Preliminary quantitation of pollutants or target compounds.
- Selection of sampling locations.
- Optimization of a sampling grid.

Monitoring activities

- Health and safety of affected residents.
- Ground-water well placement.
- Selection of ground-water well screen depths and multi-level sampler placement.

- Monitoring the horizontal and vertical contamination plume during an extent of contamination study.
- Monitoring or testing the effectiveness of a treatability study or engineering design prior to confirmatory analysis.
- Interim actions (e.g., removal, containment).
- Monitoring a cleanup operation prior to confirmatory analysis.
- Potential Responsible Party (PRP) oversight.

Other Activities

- Preliminary data for public relations.
- Detection of potential sources of contamination and exposure pathways.
- Preliminary or interim evaluation of remedial alternatives or removal technologies.
- Dictation of disposal requirements of waste generated on-site.
- Waste compatibility.
- Identification of clean-up technologies.
- Supplemental data collection (for addressing data gaps).

Analytical data generated using this SOW and used without confirmatory data may be inappropriate for certain final decisions, such as determining National Priorities Listings (NPL) of sites, identification of remedial alternatives, final risk assessments, and cleanup action limits. Analytical data generated using this SOW may, however, be used to assist in making these decisions if more quantitative, confirmatory analytical data are also provided.

SECTION II

GENERAL REQUIREMENTS

Under this SOW, Contractor Laboratories (hereafter called Contractor or Laboratory) shall analyze water, soil/solid (e.g., sediment and sludge), oil/oily (e.g., drum waste and oily mixtures), and wipe samples for volatiles, pesticides, polychlorinated biphenyls (PCBs) as Aroclors, polynuclear aromatic hydrocarbons (PAHs), and phenolic compounds. Volatiles shall be analyzed by a heated headspace sampler followed by gas chromatographic (GC) analysis using photo-ionization (PID) and electrolytic conductivity (ELCD) detectors in series. Pesticides, Aroclors, PAHs, and phenols shall be analyzed by solid phase or solvent extraction followed by GC analysis. Pesticides and Aroclors shall be detected by electron capture (ECD). PAHs shall be detected by flame ionization (FID), and phenols shall be detected by PID or FID. Exhibit D of this SOW specifies the protocols for each method.

The Contractor shall transfer a summary of the analytical and QC data to the appropriate EPA official or Region and to the CLP Analytical Services Support (CLASS) contractor via the specified electronic data transfer and data evaluation system within 48 hours (or 72 hours if more than three fractions are analyzed) after VTSR. Seven days after VTSR (eight days after VTSR if more than three fractions are analyzed), the Contractor shall send the Complete Batch File to the appropriate Region-RSCC and the complete data package to the CLASS contractor and to the Region-Client. Exhibit B specifies the deliverables and turnaround times required by this SOW. In addition, if requested during the sample scheduling and receipt process, the Laboratory shall report preliminary Form I sample results for 1-10 fractional analyses via fax or telephone to the requestor within 24 hours after VTSR (limited to a maximum of five requests per seven calendar days). If requested before receipt of hardcopy data, the Contractor shall send by fax copies of preliminary raw data results within four hours of the request (see Exhibit B for additional details).

The Quality Assurance (QA) program for this SOW consists of QC samples, sample preparation QC procedures, instrument QC procedures as defined in the analytical methods (Exhibit D), and external procedures specified in Exhibit E. The QA program, which includes the QC procedures for the analytical methods, is designed to facilitate the rapid analysis of samples while still generating data of known and documented quality. The Contractor shall analyze one or more Laboratory Control Samples (LCS) per Batch of field samples to ensure system stability during analysis. During the preparation of samples, the Contractor shall fortify, where stated, samples, blanks, standards, and LCSs with a System Monitor Compound (SMC) before injection. Instrument QC shall include an initial calibration, a daily calibration check, and a Performance Verification Standard (PVS). The initial calibration shall be performed at contract award and whenever the instrument does not meet daily calibration check or certain other QC acceptance criteria. The daily calibration check, blanks, and the LCS shall be run before field samples are

analyzed. An instrument blank and PVS shall be performed at the end of each 24-hour analytical sequence. The specific procedures to be followed are outlined in Exhibit D of this SOW.

Sample analysis data, sample documentation, and other deliverables shall be reported as specified in Exhibit B. Exhibit C of this SOW specifies the target compounds and their contract required quantitation limits (CRQL). Exhibits E and F outline the chain-of-custody and document control procedures which shall be followed with each Batch of samples. Exhibit G, the glossary of terms and acronym list, is provided to ensure a proper understanding of language utilized in this SOW. When a term is used in the SOW without explanation, the glossary definition shall be applicable. Specifications for reporting data in computer-readable form appear in Exhibit H. Prior to accepting any samples from the Agency, the Contractor shall have in-house, the appropriate standards for all target compounds listed in Exhibit C.

The samples to be analyzed by the Laboratory are from known or suspected hazardous waste sites and may contain hazardous organic and/or inorganic materials which could present a significant risk to human health and a hazard to Laboratory instrumentation/equipment. The Contractor should be aware of the potential hazards associated with the handling and analyses of these samples. It is the Contractor's responsibility to take all necessary measures to ensure the health and safety of its employees, and to maintain its analytical instruments in good working condition.

In addition, the Contractor must be aware of the importance of maintaining the integrity of the data generated under this contract, as the data may be used to make important decisions regarding public health and environmental welfare. Data generated under this contract may also be used in litigation against potential responsible parties (PRPs) in the enforcement of Superfund legislation. Consequently, the Contractor shall take appropriate steps to ensure the integrity of all data generated under this contract.

SECTION III

SPECIFIC REQUIREMENTS

1 Good Laboratory Practices and Contractor Tasks

During the length of this contract, the Contractor shall adhere to good laboratory practices and good automated laboratory practices. Requirements for maintaining good laboratory practices and good automated laboratory practices are provided in Exhibit E of this SOW.

For each sample, the Contractor shall perform certain tasks. These tasks are: (1) receive and prepare environmental samples; (2) analyze samples for organic compounds; (3) qualitatively identify the presence of organic compounds in the samples; (4) quantitatively identify the concentrations of organic compounds in the samples; (5) adhere to QC procedures outlined in this SOW; and (6) prepare, report, and deliver the data. These tasks are specifically outlined as follows.

1.1 Task 1 - Receive and prepare environmental samples.

1.1.1 The Contractor shall receive and handle samples under the chain-of-custody procedures described in Exhibits E and F.

1.1.2 The Contractor shall prepare samples as described in Exhibit D.

1.2 Task 2 - Analyze samples for organic compounds.

1.2.1 Extracts and aliquots prepared in Task 1 shall be analyzed by the GC techniques described in the methodologies given in Exhibit D for the target compounds listed in Exhibit C.

1.2.2 Automated computer programs may be used to facilitate the qualitative identification and quantitation of sample results.

1.3 Task 3 - Qualitative identification of the organic compounds identified in Task 2.

1.3.1 The compounds analyzed by GC techniques and initially identified in Task 2 shall be verified by an analyst competent in the interpretation of GC chromatograms by comparison of initial calibration relative or absolute retention time to the relative or absolute retention time of the suspected compound in the sample as specified in Exhibit D.

1.3.2 If a compound analyzed by GC techniques and initially identified in Task 2 cannot be verified by the criteria described above, but in the technical judgment of the GC interpretation specialist the identification is correct, then the Contractor shall report that

identification, comment accordingly in the Batch Narrative, and proceed with quantitation in Task 4.

1.4 Task 4 - Quantitation of organic compounds verified in Task 3.

1.4.1 The Contractor shall quantitate compounds analyzed by GC techniques and identified and qualified in Tasks 2 and 3 by the external standard method as described in Exhibit D. Quantitation shall be performed using calibration factors determined during the initial calibration.

1.4.2 The Contractor shall perform a daily one-point calibration check, verify its linearity by comparison to the initial calibration, and perform a PVS analysis as outlined in Exhibit D to ensure that instrument stability and sensitivity were maintained during sample analysis.

1.5 Task 5 - Adherence to quality control and quality assurance procedures.

1.5.1 The Contractor shall adhere to all specific QC procedures described in Exhibit D and QA procedures described in Exhibit E. Records documenting the use of the specified QC protocols shall be maintained in accordance with the document control procedures described in Exhibit F, and shall be reported in accordance with Exhibit B.

1.5.2 The Contractor shall analyze one LCS for each type of analysis for each group of samples of a similar matrix for each Batch of field samples in a Case.

1.5.3 The Contractor shall prepare and analyze one laboratory method blank for each group of samples of a similar matrix and extracted by a similar method for each Batch of field samples in a Case. The Contractor shall run one instrument blank immediately after the initial calibration, immediately preceeding a daily calibration check standard, and immediately before the PVS in an analytical sequence.

1.5.4 The Contractor shall perform an initial calibration, a daily calibration check, and a final PVS using standards of defined concentration to monitor response and retention time.

1.5.5 The Contractor shall establish a Quality Assurance Plan (QAP) with the objective of providing sound analytical chemical measurements. This program shall incorporate the QC procedures, any necessary corrective action, and all documentation required during data collection, as well as the quality assessment measures performed by management to ensure acceptable data production.

1.5.6 Additional QC shall be conducted in the form of the analysis of Performance Evaluation (PE) check samples submitted to the Laboratory by the Agency. The results of all such control or PE check samples may be used as grounds for termination of contracts of non-compliant Contractors. "Compliant performance" is defined as that which yields correct compound identification and concentration values as determined by the Agency, as well as meeting the contract requirements for analysis (Exhibit D), QA/QC (Exhibit E), data reporting and other deliverables (Exhibits B and H), and sample custody, sample documentation, and standard operating procedure (SOP) documentation (Exhibits E and F).

1.6 Task 6 - Prepare, report, and deliver the data.

Samples shall be analyzed and the data reported to EPA within the specified turnaround times following VTSR. The Contractor shall prepare electronic and hardcopy data according to the procedures outlined in Exhibit B. The Contractor shall report electronic, hardcopy, and preliminary data according to the formats, order, and turnaround times required by this contract. The Contractor shall deliver to EPA all summary data, raw data, QC data, and chain-of-custody information generated from the tasks described above.

2 <u>Data Format</u>

The Contractor shall use EPA-provided formats for reporting the data generated from the tasks described above.

2.1 The Contractor shall be responsible for completing and delivering sample and QC data summary electronically in the format specified in this SOW and within the time specified in the Contract Performance/Delivery Schedule. The formats for the analytical data are contained in Exhibits B and H.

2.2 EPA will consider formats other than those designated by EPA to be non-compliant and will constitute unacceptable data. Resubmission in the specified format at no additional cost to the Government shall be required.

2.3 Computer-generated forms may be submitted in the hardcopy data package(s) provided that the forms are in exact EPA format, as specified in Exhibit B. Exact EPA format means that the order and reporting of data is the same as on each EPA-required form, including form numbers and titles, page numbers, and header information.

2.4 The hardcopy data submitted to the Region shall contain all information reported on the electronic data transfer (EDT). The Contractor shall ensure that the information contained in the electronic data summary is consistent with the information contained in the hardcopy data. If

after EPA inspection discrepancies are found, the Contractor shall be required to resubmit either or both sets of data at no additional cost to the Government.

3 Analytical Equipment

The Contractor shall provide analytical equipment and technical expertise for this contract.

3.1 All equipment and instrumentation specified in this SOW are required and shall be in the possession of the Contractor and in good operating condition at all times during the length of this contract. The Contractor shall ensure that in the event of instrument or equipment failure, backup instrumentation or equipment in good operating condition are available to perform sample preparation and analysis. It is recommended that the Contractor install surge protectors and have a temporary backup power supply source in order to protect analytical instruments and equipment in the event of a temporary electrical disruption or power surge.

3.2 The Contractor shall have sufficient GC capability to meet all the terms and conditions of the contract. Instrument requirements are defined in IFB Attachment C, Bidder Responsibility. The Contractor shall have, at a minimum, all analytical equipment required for this contract and which are stated in this contract at the time of contract award.

3.3 The Contractor shall have five dedicated GC instrument systems. Each system shall have the following, as described in Exhibit D:

- The GC for volatile analysis shall be equipped with a heated automated headspace sampler, capillary column, and an ELCD and PID detector in series;
- The GCs for pesticide and Aroclor analyses shall be equipped with a capillary column and an ECD;
- The GC for PAH analysis shall be equipped with a capillary column and an FID; and
- The GC for phenols analysis shall be equipped with a capillary column and an FID or PID.

4 Minimum Functional Requirements

The minimum functional requirements necessary to meet the terms and conditions of this contract are listed below and described in IFB Atachment C. The Contractor shall designate and utilize key personnel to perform these functions. EPA reserves the right to review personnel qualifications and experience, and take contract action as appropriate.

The minimal functional requirements are listed below and described in detail later in this Exhibit:

- GC Laboratory Supervisor;
- Sample Preparation Laboratory Supervisor;
- Quality Assurance Officer;
- Systems Manager;
- GC Operators;
- Extraction/Concentration Experts;
- Programmer Analyst; and
- Technical Staff Back-up.

5 Response to Requests

After the Region's receipt of the hardcopy data, the Contractor shall respond within two days or within specified times to requests from data recipients for additional information or explanations that result from the Government's inspection and review. If before the hardcopy data are due, additional information such as raw data are requested, the Laboratory shall deliver the information via fax to the requestor within four hours of the request (see Exhibit B for additional information). If requested during the scheduling and sample receipt process, the Laboratory shall deliver by fax or telephone preliminary Form I analytical results for 1-10 fractional sample analyses to the requestor within 24 hours after VTSR (limited to five requests per seven calendar days).

6 Sample Shipment and Storage of Samples and Sample Extracts

Sample shipments to the Laboratory will be coordinated by the CLASS contractor acting on behalf of the EPA Headquarters Administrative Project Officer (APO). The Contractor shall communicate with designated CLASS contractor personnel or EPA Regional officials by telecommunication as necessary throughout the process of sample scheduling, shipment, analysis, and data reporting, to ensure that samples are properly processed.

The Contractor shall preserve all sample extracts after analysis in bottles or vials with Teflon-lined septa, and shall maintain stored extracts at 4°C (± 2°C). The Contractor is required to retain the sample extracts for 21 days after hardcopy data submission and samples for 60 days after hardcopy data submission. During that time, the

Contractor shall submit the extracts as directed within seven days after request, as specified in the Contract Performance/Delivery Schedule.

7 Non-Routine Situations

The Contractor shall handle non-routine situations in the manner stated below.

7.1 If there are problems with the samples, sample documentation, or paperwork, the Contractor shall immediately contact the CLASS contractor or the appropriate Regional official for resolution. Examples of problems include mixed media, broken or leaking containers, Quick Turnaround Method Traffic Report/Chain-of-Custody (QTM TR/COC) forms not with the shipment, or non-correspondence of samples and QTM TR/COC form numbers.

7.2 If the Contractor receives uncommon sample matrices such as biological matrices, rocks, concrete, bricks, wood, asphalt or other extraneous materials, the Contractor shall immediately contact the CLASS contractor or the appropriate Regional official for resolution.

7.3 The Contractor shall immediately notify the CLASS contractor regarding any problems or laboratory conditions that affect the timeliness of analyses and data reporting. The Contractor shall notify the CLASS contractor in advance regarding sample data that will be delivered late and shall specify the estimated delivery date.

7.4 The Contractor shall resolve all problems relating to samples, documentation, or paperwork with the CLASS contractor or the appropriate Regional official.

7.5 The Contractor shall follow the requirements of this SOW without deviation. Only the Regional CLP Technical Project Officer (TPO) or the EPA Headquarters APO have the authority to provide instructions or clarifications regarding the requirements of the SOW. The Contractor shall report all non-routine situations or conditions regarding sample preparation, extraction, and analysis in the Batch Narrative. Examples of these non-routine situations include unusual problems encountered during the preparation, extraction, or analysis of samples, deviations from the SOW required to successfully analyze samples (e.g., results based on sample dry weights), requests for preliminary data, unauthorized directives, and directives that are in conflict with the contract requirements.

7.6 All non-routine situations shall be reported in the Batch Narrative. The Contractor shall contact the APO if it would like to have the Batch Narrative considered in the EPA inspection process. (NOTE: Deviations from the contract requirements may lead to reduced payment or non-payment for an analysis. It is the Contractor's responsibility to

report such deviations to the APO so that payment considerations can be taken into account).

8 Reanalysis and Reextraction of Samples

Conditions for re-extraction and reanalysis are specified in Exhibit D of this SOW. All other re-extractions and/or reanalyses of samples can only be authorized by the CLASS contractor acting on behalf of the Regional TPO or Headquarters APO. Such reanalyses must be formally scheduled after the data for the original analysis has been delivered. In addition, the Contractor may not stop an analysis once the preparation, extraction, or analysis has begun, unless authorized by the CLASS contractor acting on behalf of the Regional TPO or Headquarters APO.

9 Cases and Batches of Samples

Sample analyses will be scheduled by groups of samples, each defined as a "Case," and identified by a unique EPA Case and Batch number assigned by the CLASS contractor.

9.1 A Case comprises a group of samples collected at one site or geographical area over a finite time period, and will include one or more field samples with associated blanks and LCSs. A Case of samples may be shipped to the Contractor in a single shipment or multiple shipments over a period of time, depending on the size of the Case.

9.2 A Case consists of one or more Batch(es). A Batch is defined by the following, whichever is most frequent:

- Each Case of field samples received, OR
- Each group of field samples (up to 30 fractional analyses) within a Case received in one day.

9.3 All data for all samples in a Batch are due concurrently to all data recipients as stipulated in the Delivery Schedule in Exhibit B, Section I. Hardcopy data for all samples within a Batch shall be submitted in one package in the order specified in Exhibit B. The "Batch No." will be indicated on the QTM TR/COC. If however, the "Batch No." is not indicated on the QTM TR/COC, the Laboratory shall assign it as the EPA sample number of the first sample received in the Batch. When several samples are received together in the first Batch shipment, the "Batch No." shall be the lowest sample number (considering both alpha and numeric designations) in the first group of samples received under the Batch. The "Batch No." shall be reported on all data reporting forms.

9.4 The Batch receipt date is the date and time at which the Batch is received by the laboratory and determines the VTSR.

9.5 If the Laboratory receives more than 30 fractional sample analyses in a given day, then the fractional samples analyses that exceed the 30 (e.g., five if 35 fractional sample analyses were received) would be considered a separate Batch, and the VTSR would be 8 a.m. the following day.

VTSR for Batch Arrivals on Monday through Thursday

If the Batch arrives before 5 p.m. Eastern Standard Time (EST), the electronic sample and QC data for all samples within the Batch are due within the specified turnaround time following VTSR.

If a Batch is received after 5 p.m. EST, the VTSR shall be at 8 a.m. EST the following day, and the electronic sample and QC data for all samples within the Batch are due within the specified turnaround time following VTSR.

VTSR for Batch Arrivals on Friday

If a Batch is received on a Friday before 5 p.m. EST, the VTSR shall be at 5 p.m. EST Saturday, and the electronic sample and QC data for all samples within a Batch are due at 5 p.m. EST on the following Monday. If samples are analyzed for more than three fractions, the electronic sample and QC data for all samples within a Batch are due at 5 p.m. EST on the following Tuesday.

If a Batch is received on a Friday after 5 p.m. EST, the VTSR shall be at 5 p.m. EST Sunday, and the electronic sample and QC data for all samples within a Batch are due by 5 p.m. EST on the following Tuesday. If samples are analyzed for more than three fractions, the electronic sample and QC data for all samples within a Batch are due at 5 p.m. EST on the following Wednesday.

VTSR for Batch Arrivals on Weekends

If a Batch is received on a Saturday, the VTSR shall be 5 p.m. Sunday, and the electronic sample and QC data for all samples within a Batch are due by 5 p.m. EST on the following Tuesday. If samples are analyzed for more than three fractions, the electronic sample and QC data for all samples within a Batch are due at 5 p.m. EST on the following Wednesday.

If a Batch is received on a Sunday, the VTSR shall be 8 a.m. Monday, and the electronic sample and QC data for all samples within a Batch are due by 8 a.m. EST on the following Wednesday. If samples are analyzed for more than three fractions, the electronic sample and QC data for all samples within a Batch are due at 8 a.m. EST on the following Thursday.

VTSR for More than Three Fractional Analyses

If more than three fractional analyses are requested and performed, the electronic sample and QC data are due 72 hours after VTSR. If more than three fractional analyses are requested and performed, the hardcopy data is due eight days after VTSR.

9.6 If the VTSR date is adjusted for samples received during non-routine working hours as described in Exhibit A, Section III, paragraph 9.5, the Laboratory shall note this in the Batch Narrative(s) as described in Exhibit B, Section III, paragraph 8.

9.7 The Contractor is responsible for identifying each Batch as samples are received, through proper sample documentation as described in Exhibit B and through communication with the CLASS contractor personnel or the designated Regional official.

9.8 EPA Case numbers (including Batch numbers) and EPA sample numbers shall be used by the Contractor in identifying samples received under this contract. The Contractor shall use these numbers in reports, written correspondence, and verbal correspondence.

10 Traffic Report/Chain-of-Custody

The Contractor shall adhere to all chain-of-custody procedures stated or described in this SOW as indicated below.

10.1 The Contractor shall adhere to all chain-of-custody procedures described in Exhibits E and F. Documentation, as described therein, shall be required to show that all procedures are being strictly followed. This documentation shall be reported as part of the Complete Batch File (see Exhibit B).

10.2 Each sample received by the Contractor shall be labeled with an EPA sample number. The QTM TR/COC forms that accompany the sample will bear the EPA sample number and will contain descriptive information regarding the sample. The Contractor shall complete and sign the QTM TR/COC forms on the date and at the time of sample receipt, and report the condition of each sample and container.

10.3 The Contractor shall submit signed copies of the QTM TR/COC forms for all samples within a Batch to the CLASS contractor within three calendar days following receipt of the Batch. These forms shall be submitted in Batch sets with a Batch Cover Sheet containing information regarding the Batch. The Contractor shall prepare a Batch set of QTM TR/COC forms by clipping together all QTM TR/COC forms for that Batch.

10.4 Samples routinely will be shipped to the Laboratory through an overnight delivery service. However, as necessary, the Laboratory shall be responsible for any handling or processing required for the receipt of sample shipments, including pick-up of samples at the nearest servicing

airport, bus station, or other carrier service within the Laboratory's geographical area. The Laboratory shall be available to receive sample shipments at any time the delivery service is operating, including Saturdays and Sundays.

10.5 The Contractor shall resolve all missing or inaccurate information with the CLASS contractor or with the designated Regional official as a requirement of this contract.

11 Acceptance of Samples

The Contractor shall accept all samples scheduled by EPA, provided that the total number of samples received in any calendar month does not exceed the monthly limitation stated in this contract. Should the Contractor elect to accept additional samples, the Contractor shall remain bound by all contract requirements for analysis of those samples accepted.

12 Summary of Important Requirements

The Laboratory shall adhere to all requirements in this SOW contract and in particular to the following.

12.1 The Laboratory shall not deviate from the requirements of this SOW.

12.2 The Laboratory shall follow good laboratory practices and good automated laboratory practices.

12.3 Only the Regional TPO and Headquaters APO shall have the authority to provide instructions and clarifications to a Contractor regarding this SOW.

12.4 Re-extraction and/or reanalysis of samples, not specifically required by this SOW, can only be authorized by the CLASS contractor acting on behalf of the Regional TPO or Headquarters APO. Such reanalysis must be formally scheduled after data for the original analysis has been delivered.

12.5 The Contractor may not stop an analysis once it has accepted samples for analysis, unless authorized by the Headquarters APO or the Regional TPO.

12.6 Any non-routine situation involving extraction and analysis shall be reported in the Batch Narrative. The Contractor shall contact the Headquarters APO if the Contractor would like to have the Batch Narrative considered in the EPA inspection process.

12.7 Failure to follow these requirements could result in non-payment or reduced payment.

SECTION IV

DETAILED TECHNICAL AND MANAGEMENT REQUIREMENTS

As cited in Section III, the Contractor shall have the following technical and management capabilities specified below.

1 TECHNICAL CAPABILITY

1.1 Technical Supervisory Personnel

1.1.1 GC Laboratory Supervisor

1.1.1.1 Responsible for all technical efforts of the GC laboratory to meet all terms and conditions of this contract.

1.1.1.2 Qualifications:

1.1.1.2.1 Education:

Minimum of Bachelor's degree in chemistry or any scientific/engineering discipline.

1.1.1.2.2 Experience:

Minimum of three years of environmental laboratory GC experience, including at least one year of supervisory experience.

1.1.2 Sample Preparation Laboratory Supervisor

1.1.2.1 Responsible for all technical efforts of sample preparations to meet all terms and conditions of this contract.

1.1.2.2 Qualifications:

1.1.2.2.1 Education:

Minimum of Bachelor's degree in chemistry or any scientific/engineering discipline.

1.1.2.2.2 Experience:

Minimum of three years of environmental laboratory sample preparation experience, including at least one year of supervisory experience.

1.1.3 Quality Assurance Officer

1.1.3.1 Responsible for overseeing the quality assurance aspects of EPA contract data and reporting directly to upper management to meet all terms and conditions of this contract.

1.1.3.2 Qualifications:

1.1.3.2.1 Education:

Minimum of Bachelor's degree in chemistry or any scientific/engineering discipline.

1.1.3.2.2 Experience:

Minimum of three years of laboratory experience, including at least one year of applied experience with QA principles and practices in an analytical laboratory.

1.1.4 Systems Manager

1.1.4.1 Responsible for the management and quality control of all computing systems (hardware, software, documentation, and procedures), generating, updating, and performing quality control procedures on automated deliverables to meet all terms and conditions of this contract.

1.1.4.2 Qualifications:

1.1.4.2.1 Education:

Minimum of Bachelor's degree with four or more intermediate courses in programming, information management, database management systems, or systems requirements analysis.

1.1.4.2.2 Experience:

Minimum of three years experience in data or systems management or programming including one year of experience with software utilized for data management and generation of data deliverables.

1.2 Technical Staff

1.2.1 GC Operators

1.2.1.1 Responsible for the analysis of samples in accordance with QTM SOW methodologies using GC techniques as required under this contract.

1.2.1.2 Qualifications:

1.2.1.2.1 Education:

Minimum of Bachelor's degree in chemistry or any scientific/engineering discipline.

1.2.1.2.2 Experience:

One year of experience in operating and maintaining a GC and performing environmental analysis utilizing GC techniques and interpreting GC data for volatiles, PAHs, phenols, pesticides, and Aroclors, and with a Bachelor's degree in chemistry or a scientific/engineering discipline, or in lieu of the Bachelor's degree, three years of experience in operating and maintaining a GC and performing environmental analysis utilizing GC techniques and interpreting GC data for volatiles, PAHs, phenols, pesticides, and Aroclors.

1.2.2 Extraction/Concentration Experts

1.2.2.1 Responsible for the clean-up and extraction of samples using solid phase extraction technology and using conventional sample preparation technologies.

1.2.2.2 Qualifications:

1.2.2.2.1 Education:

Minimum of High School diploma and a college level course in general chemistry.

1.2.2.2.2 Experience:

Minimum of one year of experience in extraction/concentration of samples for environmental analysis.

1.2.3 Programmer Analyst

1.2.3.1 Responsible for the installation, operation and maintenance of software, hardware, and programs generating, updating and performing quality control procedures on analytical databases and automated deliverables to meet all terms and conditions of this contract.

1.2.3.2 Qualifications:

1.2.3.2.1 Education:

Minimum of Bachelor's degree with four or more intermediate courses in programming, information management, information systems, database management systems, or systems requirements analysis.

1.2.3.2.2 Experience:

Minimum of two years experience in systems or applications programming including one year of experience with analytical data management software.

1.2.4 Back-Up Programmer Analyst

Due to the complexity of the QTM software and the electronic data transfer system, it is highly recommended that a back-up programmer analyst be made available to ensure that all QTM data reporting requirements as specified in the contract are met.

1.2.5 Technical Staff Back-Up

The bidder shall have a minimum of one chemist available at any one time as a back-up technical person with the following qualifications, to ensure continuous operations to accomplish the required work as specified by this contract.

1.2.5.1 Education:

Minimum of Bachelor's degree in chemistry or any scientific/engineering discipline.

1.2.5.2 Experience: Bachelor's degree in chemistry or any scientific/engineering discipline and minimum of one year in a combination of all of the following areas:

- GC operation and maintenance;
- Analysis of environmental samples utilizing GC techniques; and
- Sample preparation and extraction of samples for environmental analysis.

or in lieu of the Bachelor's degree, three years of experience in a combination of all of the following areas:

- GC operation and maintenance;
- Analysis of environmental samples utilizing GC techniques; and
- Sample preparation and extraction of samples for environmental analysis.

1.3 Facilities

The adequacy of the facilities and equipment is of equal importance as the technical staff to accomplish the required work as specified by this contract. At a minimum the Laboratory must have the following:

1.3.1 Sample Receipt Area

Adequate, contamination-free, well ventilated work space provided with chemical resistant bench top for receipt and safe handling of EPA samples.

1.3.2 Storage Area

Sufficient refrigerator space to maintain unused EPA sample volume for 60 days after data submission and sample extracts for 21 days after data submission. NOTE: Volatile samples or extracts, volatile standards, phenol/polycyclic aromatic hydrocarbon/pesticide/PCB extracts, phenol/polycyclic aromatic

hydrocarbon/pesticide/PCB samples, phenol/polycyclic aromatic hydrocarbon/pesticide/PCB standards shall each be stored separately. Samples shall be stored in an atmosphere demonstrated to be free from all potential contaminants. Volatile samples shall be stored in a refrigerator used only for storage of volatile samples from this contract. Volatile samples for other contracts shall be stored in other refrigerators.

1.3.3 Sample Preparation Area

Adequate, contamination-free, well-ventilated work space provided with:

- Benches with chemical resistant tops and exhaust hoods (Note: Standards shall be prepared in a glove box or isolated area);
- Source of distilled or demineralized organic-free water; and
- Analytical balance(s) located away from draft and rapid change in temperature.

1.3.4 Standards

The Contractor shall have in-house appropriate standards for all target compounds listed in Exhibit C, and System Monitor Compounds listed in Exhibit D of the SOW within seven days of contract receipt.

1.4 Instrumentation

At a minimum, the Contractor shall have the following instruments operative at the time of the Preaward Site Evaluation and committed for the full duration of the contract.

1.4.1 Primary instrument requirements for 720 fractional sample analysis/month capacity

Fraction	No. of Instrument(s)	Type of Instrument
Volatiles	1	GC/PID/ELCD with heated headspace device
PAHs	1	GC/FID
Phenols	1	GC/FID or GC/PID
Pesticides	1	GC/ECD
Aroclors	1	GC/ECD

1.4.2 Secondary instrument requirements for 720 fractional sample analysis/month capacity

The Contractor shall have the following instruments in place and operational at any one time as a back-up system:

Quantity	Instruments/GC Detectors
1	GC
1	PID
1	FID
1	ECD
1	ELCD
1	Heated headspace analyzer

These instruments must be included in the bidder's inventory of equipment along with those in section 1 of this Exhibit.

In addition, the Contractor shall have an in-house stock of instrument parts and circuit boards to ensure continuous operation to meet contract-specified holding and turnaround times.

1.4.3 Instrument Specifications

Instrument specifications are described in detail in Exhibit D of this SOW.

1.5 Data Management and Handling

1.5.1 Computer hardware and software requirements - The Contractor shall have all necessary computer equipment and software to meet the requirements of the QTM Data Aquisition and Delivery System. See Exhibit B - On Line Data Transfer System for the specific requirements.

1.5.2 The Contractor shall also be able to submit reports and data packages as specified in Exhibit B of this SOW. To complete this task, the Contractor shall provide space, tables, a fax machine, and adequate copy machines to meet the contract requirements. The Contractor shall also designate personnel to perform tasks specified in the SOW and to use the hardware and software listed above in the performance of such tasks. The laboratory manager shall authorize by signing any data that has been manually edited.

2 LABORATORY MANAGEMENT CAPABILITY

The Contractor must have an organization with well-defined responsibilities for each individual in the management system to ensure sufficient resources for this contract and to maintain a successful operation. To establish this capability, the Contractor shall designate personnel to carry out the following responsibilities for this contract. Functions include, but are not limited to, the following.

2.1 Technical Staff

Responsible for all technical efforts for this contract. The Contractor shall have adequate number of technical personnel to meet the requirements of this contract.

2.2 Project Manager

Responsible for overall aspects of this contract (from sample receipt through data delivery) and shall be the primary contact for the EPA Headquarters APO and Regional TPO.

2.3 Sample Custodian

Responsible for receiving, logging, handling, and storing EPA samples as required by this contract.

2.4 Quality Assurance Officer

Responsible for overseeing the QA aspects of the data and reporting directly to upper management.

2.5 Document Control Officer

Responsible for all aspects of data deliverables: organizing, packaging, copying, and delivering. Responsible for ensuring that all documents generated are placed in the Complete Batch File for inventory and are delivered to the designated Regional official or other designated receiver(s).

EXHIBIT B

REPORTING AND DELIVERABLES REQUIREMENTS

TABLE OF CONTENTS

		Page
SECTION I:	Contract Reports/Deliverables Distribution	B-3
SECTION II:	Report Descriptions and Order of Data Deliverables	B-7
SECTION III:	Forms Instruction Guide	B-30
SECTION IV:	Data Reporting Forms	B-48
SECTION V:	On-Line Data Transfer System and Contractor ADP Requirements	B-49

SECTION I

CONTRACT REPORTS/DELIVERABLES DISTRIBUTION

The following table reiterates the Contract reporting and deliverables requirements specified in the Contract Schedule (Contract Performance/Delivery Schedule) and specifies the distribution that is required for each deliverable. NOTE: Specific recipient names and addresses are subject to change during the term of the contract. The Administrative Project Officer will notify the Contractor in writing of such changes when they occur.

	Item	Total No. Copies	Delivery Schedule	Distribution (1)	(2)	(3)	(4)	(5)
A.	Standard Operating Procedures	3 copies	Maintain on file within 60 days of contract award. Submit within 7 days after receipt of written request by APO and/or EMSL-LV and as required in Exhibit E.		X	X		X
B.	Sample QTM Traffic Report/Chain-of-Custody form	1 copy	3 days after VTSR* of last sample in Batch.**	X				
C.	Sample and QC data summary by electronic transmission	1 transmittal	48 hours after VTSR of last sample in Batch. ****		To EPA mainframe computer			
D.	Sample and QC Hardcopy Data Package *****	2 copies	7 days after VTSR of last sample in Batch. **** Submit to EMSL-LV within 7 days after receipt of written request.	X			X	
E.	Complete Batch File***	1 package	7 days after VTSR of last sample in Batch. ****			X		
F.	Sample and QC data summary backup in computer readable form (diskette)	1 copy	Retain for 365 days after hardcopy data submission; or submit within 7 days after receipt of written request by APO and/or EMSL/LV.		As directed			

	Item	Total No. Copies	Delivery Schedule	Distribution (1)	(2)	(3)	(4)	(5)
G.	Contract Compliance Screening Hardcopy Report	3 Copies	7 Days after VTSR of last sample in Batch. **** Submit to EMSL-LV within 7 days after receipt of written request.	X		X	X	
H.	Extracts	Lot	Retain for 21 days after hardcopy data submission; or within 7 days after receipt of written request by APO or the CLASS contractor.	As directed				
I.	Unused sample volume and used sample bottles/containers	Lot	Retain for at least 40 days following submission of hardcopy analytical data.	As directed				
J.	Quality Assurance Plan	1 copy	Maintain on file within 60 days of contract award. Submit within 7 days after receipt of written request by APO and/or EMSL-LV and as required in Exhibit E.	X				
K.	Preliminary form QI data results for 1-10 fractional analysis	1 copy	Within 24 hours after VTSR, of last sample in Batch, if requested				X	
L.	Preliminary raw data results	1 copy	Within 4 hours of request.				X	

NOTE: ALL RESULTS ARE TO BE REPORTED TOTAL AND COMPLETE (including Item C and concurrent delivery of Items D and E). Delivery shall be made such that all designated recipients receive items D and E on the same calendar day.

The Contractor must be prepared to receive samples within 30 days of the contract award and must be capable of receiving the full monthly contract requirement within 30 days. EPA shall determine the start-up schedule.

* VTSR (Validated Time of Sample Receipt) is the date and time of sample receipt at the Contractor's facility, as recorded on the shipper's delivery receipt and QTM Traffic Report/Chain-of-Custody forms.

The VTSR of samples received during non-routine working hours may not necessarily correspond to the sample delivery date and time. See Exhibit A, Section III, paragraph 9.5 for the definition of VTSR of samples received during non-routine working hours.

** A Batch is a group of samples within a Case, received over a period of one day and not exceeding 30 fractional analyses. Data for all samples in the Batch are due concurrently.

*** Complete Batch File (CBF) shall contain the original sample hardcopy data package including all original documents described in Exhibit B of the SOW under Complete Batch File.

**** If more than three fractional analyses are requested for a Batch of samples, the sample and QC data summary by electronic transmission is due 72 hours after VTSR and the sample hardcopy data package and the CBF are due 8 days after VTSR.

***** Each page of the hardcopy data package sent to the Region-Client shall be labeled "UNVALIDATED COPY".

NOTE: As specified in the Contract Schedule (G.6 Government Furnished Supplies and Materials), unless otherwise instructed by the CLASS contractor, the Contractor shall dispose of unused sample volume and used sample bottles/containers no earlier than sixty (60) days following submission of hardcopy analytical data.

Distribution:
(1) Contract Laboratory Analytical Services Support (CLASS) Contractor
(2) EMSL-LV
(3) Region-RSCC
(4) Region-Client
(5) NEIC

Distribution Addresses:

(1) Contract Laboratory Analytical Services Support (CLASS) Contractor

(2) USEPA Environmental Monitoring Systems Laboratory (EMSL-LV)
P.O. Box 93478
Las Vegas, NV 89114
ATTN: Data Audit Staff

For overnight delivery service, use street address:
944 E. Harmon, Executive Center
Las Vegas, NV 89109
ATTN: Data Audit Staff

(3) USEPA REGIONAL SAMPLE CONTROL CENTERS

The CLASS contractor, acting on behalf of the APO, will provide the Contractor with the list of addressees for the ten EPA Regional Sample Control Centers (RSCC). The CLASS contractor will provide the Contractor with updated RSCC address/name lists as necessary throughout the period of the contract.

(4) USEPA REGIONAL CLIENT

The CLASS contractor, acting on behalf of the APO, will provide the Contractor with the list of addressees for the Regional clients. The CLASS contractor will provide the Contractor with updated client address/name lists as necessary throughout the period of the contract. Preliminary data and raw data results shall be delivered to the Regional EPA official that makes the request.

(5) USEPA National Enforcement Investigation Center (NEIC)
Attn: CLP Audit Program
Denver Federal Center Building 53
P.O. Box 25227
Denver, CO 80225

SECTION II

REPORT DESCRIPTIONS AND ORDER OF DATA DELIVERABLES

1 General

The Contractor laboratory shall provide reports and other deliverables as specified in the Contract Schedule (Contract Performance/Delivery Schedule) The required content and form of each deliverable is described in this Exhibit.

All reports and documentation MUST be:

- Legible;
- Clearly labeled and completed in accordance with instructions in this Exhibit;
- Arranged in the order specified in this Section; and
- Paginated consecutively in ascending order starting from the first Batch Narrative.

If submitted documentation does not conform to the above criteria, the Contractor will be required to resubmit such documentation with the deficiency(ies) corrected, at no additional cost to the Agency.

Whenever the Contractor is required to submit or resubmit data as a result of an on-site laboratory evaluation or through an APO action, the data must be clearly marked as "ADDITIONAL DATA" and must be sent to all three contractual data recipients (Region-RSCC, the CLASS contractor, and Region- client). A cover letter must be included which describes what data are being delivered, to which EPA Case(s) the data pertain, and the name of the person who requested the data.

Sections III and IV of this Exhibit contain copies of the required data reporting forms in Agency-specified formats, along with instructions to assist the Contractor in accurately providing the Agency with all the required data. Section V describes the QTM laboratory software and electronic data responsibilities. The use of the QTM software is not required; however, the Laboratory must generate the QTM forms and transmit the data to the EPA National Computer Center (NCC) (the EPA mainframe computer) in the exact format as is performed by the QTM software and as specified in Exhibit H.

Descriptions of the requirements for each deliverable item cited in the Contract Schedule are specified in this Section. Items submitted concurrently SHALL BE arranged in the order listed. Additionally, the components of each item SHALL BE arranged in the order presented in this Section when the item is submitted.

Examples of specific data deliverables not included herein may be obtained by submitting a written request to the EPA APO, stating the information requested, and signed by the Laboratory Manager.

2 Updated SOPs

As requested, the Contractor shall submit updated copies of all required Standard Operating Procedures (SOPs) that were submitted with the prebid Performance Evaluation sample results. The updated SOPs must address any and all issues of laboratory performance and operation identified through the review of the Performance Evaluation sample data and the evaluation of Bidder-Supplied Documentation. Exhibit E, Section IV specifies the required SOPs and the SOP delivery requirements.

3 Sample and QC Electronic Data Package

As specified in the Contract Schedule, sample and QC data shall be transmitted via an on-line data transfer and data evaluation system to the EPA mainframe computer within the specified turnaround time. The Sample and QC Electronic Data Package consists of copies of specified items from the Sample and QC Hardcopy Data Package. These items are listed below and described under part D, Sample and QC Hardcopy Data Package. EPA has developed a software package to assist contract laboratories in preparing the required forms and in transmitting the data to the EPA mainframe computer. This software will be provided to QTM laboratories and must be used. If the Laboratory wishes to develop its own software, it must be approved in advance by the EPA.

The Sample and QC Electronic Data Package shall be reported as follows and sample data forms must be arranged in increasing EPA sample number order, considering both letters and numbers. For example, BE400 is a lower sample number than BF100, as E precedes F in the alphabet.

The Sample and QC Electronic Data Package shall contain data for samples in one Batch of the Case for each fraction of compounds that are analyzed, as follows:

3.1 By fraction (VOA, PAH, PHEN, PEST, PCB) and by sample within each fraction - Analysis Data Sheet with tabulated target compound results, System Monitor Compound results, and retention time information for field and QC samples (Form QI for VOA, PAH, PEST, and PHEN; Forms QIA and QIB for PCB);

3.2 By fraction (VOA, PAH, PHEN, PEST, PCB) - Laboratory Control Sample Sheet (Form QII);

3.3 By fraction (VOA, PAH, PHEN, PEST, PCB) - Performance Verification Standard Sheet (Form QIII);

3.4 By fraction (VOA, PAH, PHEN, PEST, PCB) - Initial Calibration Sheet (Form QIVA and QIVB);

3.5 By fraction (VOA, PAH, PHEN, PEST, PCB) - Calibration Check Sheet (Form QV);

3.6 By fraction (VOA, PAH, PHEN, PEST, PCB) - Analytical Sequence Summary (Form QVI); and

3.7 By fraction (VOA, PAH, PHEN, PEST, PCB) - Narrative (Form QVII).

3.8 QTM contract compliance screening (CCS) defect report.

4 Preliminary Data Results

4.1 Preliminary Form I Results

If requested at the time of sample scheduling, the Contractor shall provide preliminary Form I analytical results for 1-10 field sample fractional analyses via telefacsimile (fax) or telephone within 24 hours after VTSR. Requests for preliminary data results shall be limited to Form I field sample and blank analyte concentration and SMC results. Requests for preliminary data results shall be limited to a maximum of five (5) request per seven (7) calendar days.

4.2 Preliminary Raw Data Results

If requested, before hardcopy deliverables are due, the Contractor shall provide raw analysis data (e.g., chromatograms) within four (4) hours of the request for any sample which has been previously reported electronically (sample and QC data summary by electronic transmission).

Preliminary raw data shall be limited to no more than the following: (1) standards data; (2) associated method blank data; and (3) sample chromatogram(s) and quantitation report(s).

5 Sample and QC Hardcopy Data Package

The Sample and QC Hardcopy Data Package is divided into the six major units described below. The last five units are each specific to an analytical fraction (volatiles, polynuclear aromatic hydrocarbons, phenols, pesticides, and Aroclors). If the analysis of a fraction is not required, then that fraction-specific unit is not required as a deliverable.

The Sample and QC Hardcopy Data Package shall include data for analyses of all samples in one Batch, including field samples, reanalyses, blanks, initial calibration standards, calibration check standards, laboratory control samples (LCS), and performance verification standards (PVS).

The Laboratory shall correct non-compliant data in accordance with the results of the CCS screening before submission to EPA.

5.1 Quick Turnaround Method Traffic Report/Chain-of-Custody Forms (QTM TR/COC)

A copy of the combined sample QTM TR/COC form must be submitted in Item B for all of the samples in the Batch. The QTM TR/COC forms shall be arranged in increasing EPA sample number order, considering both letters and numbers. A copy of the Batch cover sheet (Section III, paragraph 6.4.3) is to be included with each copy of the QTM TR/COC.

5.2 Volatiles Data

5.2.1 Batch Narrative (Form VII-VOA)

This page shall be clearly labeled "Volatiles Narrative" and shall contain documentation of any quality control, sample, shipment, and/or analytical problems encountered in processing the samples reported in the electronic and hardcopy data package. At a minimum, the laboratory shall identify in the Batch Narrative all samples that were analyzed in the analytical sequence, describe the sample matrices, any sample dilutions performed, and any difficulties encountered by the laboratory during sample analyses or with meeting method QC requirements. The Laboratory shall also specify in volatiles Batch Narrative the target compounds associated with (detected by) each of the detectors (PID and ELCD).

Whenever data from sample reanalyses are submitted, the Contractor shall state in the Batch Narrative for each reanalysis whether the Contractor considers the reanalysis to be billable, and if so, why. The Contractor shall also include any problems encountered (both technical and administrative), the corrective actions taken, and resolution.

The Laboratory must submit a cover sheet with the hardcopy deliverables that states, verbatim: "I certify that this data package is in compliance with the terms and conditions of the contract, both technically and for completeness, for other than the conditions detailed above. Release of the data contained in this data package has been authorized by the Laboratory Manager or his designee, as verified by the following signature." This statement shall be directly followed by signature of the Laboratory Manager or his designee with a typed line below it containing the signer's name and title, and the date of signature. The electronically delivered Narratives shall have, in place of the signature, the words "Signature Obtained."

5.2.2 Contract Compliance Screening Report

5.2.3 Sample Data

Sample Analysis Data Sheets shall be arranged in packets with the Volatiles Analysis Data Sheet (Form QI-VOA) followed by the raw data for volatile samples. These sample packets shall then be arranged in increasing EPA sample number order, considering both letters and numbers.

5.2.3.1 TCL results - Quick Turnaround Analysis Data Sheet (Form QI-VOA).

The volatile target compounds (Exhibit C) shall be identified and quantitated. Relative and absolute retention time data and the sample SMC results shall be reported on Form QI-VOA. The validation and release of the results shall be authorized by a specific, signed statement in the Batch Narrative. In the event that the Laboratory Manager cannot validate all data reported for each sample, the Laboratory Manager shall provide a detailed description of the problems associated with the sample in the Batch Narrative.

5.2.3.2 Copies of VOA chromatograms.

All chromatograms shall be labeled with the following information:

- EPA sample number;
- Volume or weight of sample;
- Date and time (report in military convention if the instrument has this capability) of analysis;
- GC column identification (by stationary phase);
- GC instrument identification; and
- Identified compounds shall be labeled with the names of compounds, either directly out from the peak, or on a printout of retention times if retention times are printed over the peak.

5.2.3.3 GC integration report or data system printout.

5.2.3.4 Manual work sheets (if any).

5.2.4 Standards Data

5.2.4.1 Initial Calibration Sheet (Form QIVA-VOA and QIVB-VOA) - all GC columns, all instruments, in chronological order by GC column and instrument.

5.2.4.2 Calibration Check Sheet (Form QV-VOA) - all GC columns, all instruments, in chronological order by GC column and instrument.

Calibration check retention time data (Form QI-VOA) - all GC columns, all instruments, in chronological order by GC column and instrument.

5.2.4.3 Performance Verification Standard (PVS) (Form QIII-VOA) - Tabulated results of spiked target compounds for the PVS.

PVS retention time data (Form QI-VOA) - all GC columns, all instruments, in chronological order by GC column and instrument.

5.2.4.4 Chromatograms and data system printouts shall be required for all standards.

5.2.4.5 For all standards chromatograms, Contractors shall:

- Label all chromatograms with the "EPA Sample Number" for standards (see Forms Instructions for details);
- Label all standard peaks for all individual compounds either directly out from the peak, or on the printout of retention times if retention times are printed over the peak;
- List total nanograms (ng) injected for each standard;
- Accompany each chromatogram with a printout of retention times and corresponding peak areas;
- Document date and time (report in military convention if the instrument has this capability) of injection;
- Provide GC column identification (by stationary phase); and
- Provide GC instrument identification.

5.2.5 Raw QC Data

5.2.5.1 Blank Data - both method and instrument blank arranged in chronological order. NOTE: This order is different from that used for samples.

- Tabulated results (Form QI-VOA).
- Chromatograms and data system printouts for each GC column and instrument used for analysis labeled as in paragraph 5.2.3.2 above.

5.2.5.2 Laboratory Control Sample (LCS)

- Tabulated results (Form QII-VOA) of spiked target compounds for the LCS.
- LCS retention time data (Form QI-VOA).
- Chromatograms and data system printouts for the LCS labeled as in paragraph 5.2.3.2 above.

5.2.6 Analytical Sequence Summary (Form VI-VOA)

In order of sequence number or, if more than one instrument is used, in order of instrument ID.

5.3 Polynuclear Aromatic Hydrocarbons Data

5.3.1 Batch Narrative (Form VII-PAH)

This page shall be clearly labeled "Polynuclear Aromatic Hydrocarbons Narrative" and shall contain documentation of any quality control, sample, shipment, and/or analytical problems encountered in processing the samples reported in the data package. At a minimum, the laboratory shall identify in the Batch Narrative all samples that were analyzed in the analytical sequence, describe the sample matrices, any sample dilutions performed, and any difficulties encountered by the laboratory during sample analyses or with meeting method QC requirements.

Whenever data from sample reanalyses are submitted, the Contractor shall state in the Batch Narrative for <u>each</u> reanalysis, whether the Contractor considers the reanalysis to be billable, and if so, why. The Contractor shall also include any problems encountered (both technical and administrative), the corrective actions taken, and resolution.

The Laboratory shall submit a cover sheet with the hardcopy deliverables that states, <u>verbatim</u>: "I certify that this data

package is in compliance with the terms and conditions of the contract, both technically and for completeness, for other than the conditions detailed above. Release of the data contained in this data package has been authorized by the Laboratory Manager or his designee, as verified by the following signature." This statement shall be directly followed by signature of the Laboratory Manager or his designee with a typed line below it containing the signer's name and title, and the date of signature. The electronically delivered Narratives shall have, in place of the signature, the words "Signature Obtained."

5.3.2 Contract Compliance Screening Report

5.3.3 Sample Data

Sample Analysis Data Sheets shall be arranged in packets with the Polynuclear Aromatic Hydrocarbons Analysis Data Sheet (Form QI-PAH), followed by the raw data for PAH samples. These sample packets shall then be arranged in increasing EPA sample number order, considering both letters and numbers.

5.3.3.1 TCL results - Quick Turnaround Analysis Data Sheet (Form QI-PAH).

The PAH target compounds (Exhibit C) shall be identified and quantitated. Relative and absolute retention time data and the sample SMC results shall be reported on Form QI-PAH. The validation and release of the results shall be authorized by a specific, signed statement in the Batch Narrative. In the event that the Laboratory Manager cannot validate all data reported for each sample, the Laboratory Manager shall provide a detailed description of the problems associated with the sample in the Batch Narrative.

5.3.3.2 Copies of PAH chromatograms.

All chromatograms shall be labeled with the following information:

- EPA sample number;
- Volume injected in microliters (μL);
- Date and time (report in military convention if the instrument has this capability) of analysis;
- GC column identification (by stationary phase);

- GC instrument identification; and
- Identified compounds shall be labeled with the names of compounds, either directly out from the peak, or on a printout of retention times if retention times are printed over the peak.

5.3.3.3 GC integration report or data system printout.

5.3.3.4 Manual work sheets (if any).

5.3.4 Standards Data

5.3.4.1 Initial Calibration Sheet (Form QIVA-PAH and QIVB-PAH) - all GC columns, all instruments, in chronological order by GC column and instrument.

5.3.4.2 Calibration Check Sheet (Form QV-PAH) - all GC columns, all instruments, in chronological order by GC column and instrument.

Calibration check retention time data (Form QI-PAH) - all GC columns, all instruments, in chronological order by GC column and instrument.

5.3.4.3 Performance Verification Standard (PVS) (Form QIII-PAH) - Tabulated results of spiked target compounds for the PVS.

PVS retention time data (Form QI-PAH) - all GC columns, all instruments, in chronological order by GC column and instrument.

5.3.4.4 Chromatograms and data system printouts shall be required for all standards.

5.3.4.5 For all standards chromatograms Contractors shall:

- Label all chromatograms with the "EPA Sample Number" for standards (see Forms Instructions for details);
- Label all standard peaks for all individual compounds either directly out from the peak or on the printout of retention times if retention times are printed over the peak;
- List total nanograms (ng) injected for each standard;

- Accompany each chromatogram with a printout of retention times and corresponding peak areas;

- Document date and time (report in military convention if the instrument has this capability) of injection;

- Provide GC column identification (by stationary phase); and

- Provide GC instrument identification.

5.3.5 Raw QC Data

5.3.5.1 Blank Data - both method and instrument blank arranged in chronological order. NOTE: This order is different from that used for samples.

- Tabulated results (Form QI-PAH).

- Chromatograms and data system printouts for each GC column and instrument used for analysis labeled as in paragraph 5.3.3.2 above.

5.3.5.2 Laboratory Control Sample (LCS)

- Tabulated results (Form QII-PAH) of spiked target compounds for the LCS.

- LCS retention time data (Form QI-PAH).

- Chromatograms and data system printouts for the LCS labeled as in paragraph 5.3.3.2 above.

5.3.6 Analytical Sequence Summary (Form VI-PAH)

In order of sequence number or, if more than one instrument is used, in order of instrument ID.

5.4 Phenols Data

5.4.1 Batch Narrative (Form VII-PHE)

This page shall be clearly labeled "Phenols Narrative" and shall contain documentation of any quality control, sample, shipment, and/or analytical problems encountered in processing the samples reported in the data package. At a minimum, the laboratory shall identify in the Batch Narrative all samples that were analyzed in the analytical sequence, describe the sample matrices, any sample dilutions performed, and any difficulties encountered by the

laboratory during sample analyses or with meeting method QC requirements. The Laboratory shall also note in the Batch Narrative the detector type used.

Whenever data from sample reanalyses are submitted, the Contractor shall state in the Batch Narrative for each reanalysis whether the Contractor considers the reanalysis to be billable, and if so, why. The Contractor shall also include any problems encountered (both technical and administrative), the corrective actions taken, and resolution.

The Laboratory shall submit a cover sheet with the hardcopy deliverables that states, verbatim: "I certify that this data package is in compliance with the terms and conditions of the contract, both technically and for completeness, for other than the conditions detailed above. Release of the data contained in this data package has been authorized by the Laboratory Manager or his designee, as verified by the following signature." This statement shall be directly followed by signature of the Laboratory Manager or his designee with a typed line below it containing the signer's name and title, and the date of signature. The electronically delivered Narratives shall have, in place of the signature, the words "Signature Obtained."

5.4.2 Contract Compliance Screening Report

5.4.3 Sample Data

Sample Analysis Data Sheets shall be arranged in packets with the Phenols Analysis Data Sheet (Form QI-PHE), followed by the raw data for phenol samples. These sample packets shall then be arranged in increasing EPA sample number order, considering both letters and numbers.

5.4.3.1 TCL results - Quick Turnaround Analysis Data Sheet (Form QI-PHE).

The phenol target compounds (Exhibit C) shall be identified and quantitated. Relative and absolute retention time data and sample SMC results shall be reported on Form QI-PHE. The validation and release of the results shall be authorized by a specific, signed statement in the Batch Narrative. In the event that the Laboratory Manager cannot validate all data reported for each sample, the Laboratory Manager shall provide a detailed description of the problems associated with the sample in the Batch Narrative.

5.4.3.2 Copies of Phenols chromatograms.

All chromatograms shall be labeled with the following information:

- EPA sample number;
- Volume injected in microliters (μL);
- Date and time (report in military convention if the instrument has this capability) of analysis;
- GC column identification (by stationary phase);
- GC instrument identification; and
- Identified compounds shall be labeled with the names of compounds, either directly out from the peak, or on a printout of retention times if retention times are printed over the peak.

5.4.3.3 GC integration report or data system printout.

5.4.3.4 Manual work sheets (if any).

5.4.4 Standards Data

5.4.4.1 Initial Calibration Sheet (Form QIVA-PHE and QIVB-PHE) - all GC columns, all instruments, in chronological order by GC column and instrument.

5.4.4.2 Calibration Check Sheet (Form QV-PHE) - all GC columns, all instruments, in chronological order by GC column and instrument.

Calibration check retention time data (Form QI-PHE) - all GC columns, all instruments, in chronological order by GC column and instrument.

5.4.4.3 Performance Verification Standard (PVS) (Form QIII-PHE) - Tabulated results of spiked target compounds for the PVS.

PVS retention time data (Form QI-PHE) - all GC columns, all instruments, in chronological order by GC column and instrument.

5.4.4.4 Chromatograms and data system printouts shall be required for all standards.

5.4.4.5 For all standards chromatograms Contractors shall:

- Label all chromatograms with the "EPA Sample Number" for standards (see Forms Instructions for details);

- Label all standard peaks for all individual compounds either directly out from the peak or on the printout of retention times if retention times are printed over the peak;

- List total nanograms (ng) injected for each standard;

- Accompany each chromatogram with a printout of retention times and corresponding peak areas;

- Document date and time (report in military convention if the instrument has this capability) of injection;

- Provide GC column identification (by stationary phase); and

- Provide GC instrument identification.

5.4.5 Raw QC Data

5.4.5.1 Blank Data - both method and instrument blank arranged in chronological order. NOTE: This order is different from that used for samples.

- Tabulated results (Form QI-PHE).

- Chromatograms and data system printouts for each GC column and instrument used for analysis labeled as in paragraph 5.4.3.2 above.

5.4.5.2 Laboratory Control Sample (LCS)

- Tabulated results (Form QII-PHE) of spiked target compounds for the LCS.

- LCS retention time data (Form QI-PHE).

- Chromatograms and data system printouts for the LCS labeled as in paragraph 5.4.3.2 above.

5.4.6 Analytical Sequence Summary (Form VI-PHE)

In order of sequence number or, if more than one instrument is used, in order of instrument ID.

5.5 Pesticides Data

5.5.1 Batch Narrative (Form VII-PEST)

This page shall be clearly labeled "Pesticides Narrative" and shall contain documentation of any quality control, sample, shipment, and/or analytical problems encountered in processing the samples reported in the data package. At a minimum, the laboratory shall identify in the Batch Narrative all samples that were analyzed in the analytical sequence, describe the sample matrices, any sample dilutions performed, and any difficulties encountered by the laboratory during sample analyses or with meeting method QC requirements.

Whenever data from sample reanalyses are submitted, the Contractor shall state in the Batch Narrative for each reanalysis whether the Contractor considers the reanalysis to be billable, and if so, why. The Contractor shall also include any problems encountered (both technical and administrative), the corrective actions taken, and resolution.

The Laboratory shall submit a cover sheet with the hardcopy deliverables that states, verbatim: "I certify that this data package is in compliance with the terms and conditions of the contract, both technically and for completeness, for other than the conditions detailed above. Release of the data contained in this data package has been authorized by the Laboratory Manager or his designee, as verified by the following signature." This statement shall be directly followed by signature of the Laboratory Manager or his designee with a typed line below it containing the signer's name and title, and the date of signature. The electronically delivered Narratives shall have, in place of the signature, the words "Signature Obtained."

5.5.2 Contract Compliance Sreening Report

5.5.3 Sample Data

Sample Analysis Data Sheets shall be arranged in packets with the Pesticides Analysis Data Sheet (Form QI-PEST), followed by the raw data for pesticide samples. These sample packets shall then be arranged in increasing EPA sample number order, considering both letters and numbers.

5.5.3.1 TCL results - Quick Turnaround Analysis Data Sheet (Form QI-PEST).

The pesticide target compounds (Exhibit C) shall be identified and quantitated. Relative and absolute retention time data and the sample SMC results shall

be reported on Form QI-PEST. The validation and release of the results shall be authorized by a specific, signed statement in the Batch Narrative. In the event that the Laboratory Manager cannot validate all data reported for each sample, the Laboratory Manager shall provide a detailed description of the problems associated with the sample in the Batch Narrative.

5.5.3.2 Copies of Pesticides chromatograms.

All chromatograms shall be labeled with the following information:

- EPA sample number;
- Volume injected in microliters (μL);
- Date and time (report in military convention if the instrument has this capability) of analysis;
- GC column identification (by stationary phase);
- GC instrument identification; and
- Identified compounds shall be labeled with the names of compounds, either directly out from the peak, or on a printout of retention times if retention times are printed over the peak.

5.5.3.3 GC integration report or data system printout.

5.5.3.4 Manual work sheets (if any).

5.5.4 Standards Data

5.5.4.1 Initial Calibration Sheet (Form QIVA-PEST and QIVB-PEST) - all GC columns, all instruments, in chronological order by GC column and instrument.

5.5.4.2 Calibration Check Sheet (Form QV-PEST) - all GC columns, all instruments, in chronological order by GC column and instrument.

Calibration check retention time data (Form QI-PEST) - all GC columns, all instruments, in chronological order by GC column and instrument.

5.5.4.3 Performance Verification Standard (PVS) (Form QIII-PEST) - Tabulated results of spiked target compounds for the PVS.

PVS retention time data (Form QI-PEST) - all GC columns, all instruments, in chronological order by GC column and instrument.

5.5.4.4 Chromatograms and data system printouts shall be required for all standards.

5.5.4.5 For all standards chromatograms Contractors shall:

- Label all chromatograms with the "EPA Sample Number" for standards (see Forms Instructions for details);
- Label all standard peaks for all individual compounds either directly out from the peak or on the printout of retention times if retention times are printed over the peak;
- List total picogram (pg) injected for each standard;
- Accompany each chromatogram with a printout of retention times and corresponding peak areas;
- Document date and time (report in military convention if the instrument has this capability) of injection;
- Provide GC column identification (by stationary phase); and
- Provide GC instrument identification.

5.5.5 Raw QC Data

5.5.5.1 Blank Data - both method and instrument blank arranged in chronological order. NOTE: This order is different from that used for samples.

- Tabulated results (Form QI-PEST).
- Chromatograms and data system printouts for each GC column and instrument used for analysis labeled as in paragraph 5.5.3.2 above.

5.5.5.2 Laboratory Control Sample (LCS)

- Tabulated results (Form QII-PEST) of spiked target compounds for the LCS.
- LCS retention time data (Form QI-PEST).
- Chromatograms and data system printouts for the LCS labeled as in paragraph 5.5.3.2 above.

5.5.6 Analytical Sequence Summary (Form VI-PEST)

In order of sequence number or, if more than one instrument is used, in order of instrument ID.

5.6 Aroclors Data

5.6.1 Batch Narrative (Form VII-PCB)

This page shall be clearly labeled "Aroclors Narrative" and shall contain documentation of any quality control, sample, shipment, and/or analytical problems encountered in processing the samples reported in the data package. At a minimum, the laboratory shall identify in the Batch Narrative all samples that were analyzed in the analytical sequence, describe the sample matrices, any sample dilutions performed, and any difficulties encountered by the laboratory during sample analyses or with meeting method QC requirements.

Whenever data from sample reanalyses are submitted, the Contractor shall state in the Batch Narrative for <u>each</u> reanalysis whether the Contractor considers the reanalysis to be billable, and if so, why. The Contractor shall also include any problems encountered (both technical and administrative), the corrective actions taken, and resolution.

The Laboratory shall submit a cover sheet with the hardcopy deliverables that states, <u>verbatim</u>: "I certify that this data package is in compliance with the terms and conditions of the contract, both technically and for completeness, for other than the conditions detailed above. Release of the data contained in this data package has been authorized by the Laboratory Manager or his designee, as verified by the following signature." This statement shall be directly followed by signature of the Laboratory Manager or his designee with a typed line below it containing the signer's name and title, and the date of signature. The electronically delivered Narratives shall have, in place of the signature, the words "Signature Obtained."

5.6.2 Contract Compliance Sreening Report

5.6.3 Sample Data

Sample Analysis Data Sheets shall be arranged in packets with the Aroclors Analysis Data Sheets (Form QIA-PCB and QIB-PCB), followed by the raw data for Aroclor samples. These sample packets shall then be arranged in increasing EPA sample number order, considering both letters and numbers.

5.6.3.1 TCL results - Quick Turnaround Analysis Data Sheets (Form QIA-PCB and QIB-PCB).

The Aroclor target compounds (Exhibit C) shall be identified and quantitated. The mean sample concentration result (the average concentration of the individual peak concentrations) shall be reported on QIA-PCB. Relative and absolute retention time data and the sample SMC results shall be reported on Form QIB-PCB. The validation and release of the results shall be authorized by a specific, signed statement in the Batch Narrative. In the event that the Laboratory Manager cannot validate all data reported for each sample, the Laboratory Manager shall provide a detailed description of the problems associated with the sample in the Batch Narrative.

5.6.3.2 Copies of PCB chromatograms.

All chromatograms shall be labeled with the following information:

- EPA sample number;
- Volume injected in microliters (μL);
- Date and time (report in military convention if the instrument has this capability) of analysis;
- GC column identification (by stationary phase);
- GC instrument identification; and
- Identified Aroclor quantitation peaks shall be labeled with the names of compounds, either directly out from the peak, or on a printout of retention times if retention times are printed over the peak.

5.6.3.3 GC integration report or data system printout.

5.6.3.4 Manual work sheets (if any).

5.6.4 Standards Data

5.6.4.1 Initial Calibration Sheet (Form QIVA-PCB and QIVB-PCB) - all GC columns, all instruments, in chronological order by GC column and instrument.

5.6.4.2 Calibration Check Sheet (Form QV-PCB) - all GC columns, all instruments, in chronological order by GC column and instrument.

Calibration check retention time data (Form QIB-PCB) - all GC columns, all instruments, in chronological order by GC column and instrument.

5.6.4.3 Performance Verification Standard (PVS) (Form QIII-PCB) - Tabulated results of spiked target compounds for the PVS.

PVS retention time data (Form QIB-PCB) - all GC columns, all instruments, in chronological order by GC column and instrument.

5.6.4.4 Chromatograms and data system printouts shall be required for all standards.

5.6.4.5 For all standards chromatograms Contractors shall:

- Label all chromatograms with the "EPA Sample Number" for standards (see Forms Instructions for details);
- Label all standard Aroclor quantitation peaks either directly out from the peak or on the printout of retention times if retention times are printed over the peak;
- List total picograms (pg) injected for each standard;
- Accompany each chromatogram with a printout of retention times and corresponding peak areas;
- Document date and time (report in military convention if the instrument has this capability) of injection;
- Provide GC column identification (by stationary phase); and
- Provide GC instrument identification.

5.6.5 Raw QC Data

5.6.5.1 Blank Data - both method and instrument blank arranged in chronological order. NOTE: This order is different from that used for samples.

- Tabulated results (Form QIA-PCB and QIB-PCB).
- Chromatograms and data system printouts for each GC column and instrument used for analysis labeled as in paragraph 5.6.3.2 above.

5.6.5.2 Laboratory Control Sample (LCS)

- Tabulated results (Form QII-PCB) of spiked target compounds for the LCS.
- LCS retention time data (Form QIB-PCB).
- Chromatograms and data system printouts for the LCS labeled as in paragraph 5.6.3.2 above.

5.6.6 Analytical Sequence Summary (Form VI-PCB)

In order of sequence number or, if more than one instrument is used, in order by instrument ID.

6 Complete Batch File

As specified in the Delivery Schedule, one Complete Batch File (CBF) including the original Sample and QC Hardcopy Data Package shall be delivered to the Region-RSCC concurrently with delivery of the Sample and QC Data Package to the Region-client and the CLASS contractor. The contents of the CBF will be numbered according to the specifications described in Sections III and IV of Exhibit B. The Document Inventory Sheet (Form QDC-2) is contained in Section IV. The CBF will contain all original documents where possible. No copies will be placed in the CBF unless the originals are bound in a logbook which is maintained by the Laboratory. The CBF will contain all original documents specified in Sections III and IV and Form QDC-2 of Exhibit B of this SOW.

The CBF will consist of the following original documents in addition to the documents in the Sample and QC Hardcopy Data Package.

6.1 Original Sample and QC Hardcopy Data Package.

6.2 A completed and signed Document Inventory Sheet (Form QDC-2).

6.3 All original shipping documents, including, but not limited to, the following.

6.3.1 QTM TR/COC forms. For each Batch, the Contractor shall sign and submit the original sample QTM TR/COC page marked "Lab Copy for Return to the CLASS contractor" with laboratory receipt information. QTM TR/COC forms shall be submitted in Batch sets (i.e., QTM TR/COCs for all samples in a Batch shall be clipped together), with a Batch Cover Sheet attached.

6.3.2 Airbills.

6.3.3 Sample Tags (if present) sealed in plastic bags.

6.4 All original receiving documents, including, but not limited to, the following documents:

6.4.1 Form QDC-1.

6.4.2 Other receiving forms or copies of receiving logbooks.

6.4.3 Batch Cover Sheet.

The Batch Cover Sheet shall contain the following items:

- Lab name;
- Contract number;
- Sample analysis price - full sample analysis price from contract;
- Date and time of sample receipt;
- Case number; and
- List of EPA sample numbers of all samples in the Batch, identifying the first and last samples received.

6.5 All original laboratory records (not already submitted in the Sample and QC Hardcopy Data Package) of sample transfer, preparation and analysis, including, but not limited to, the following documents.

6.5.1 Original preparation and analysis forms or copies of preparation and analysis logbook pages.

6.5.2 Internal sample and sample extract transfer chain-of-custody records.

6.5.3 All instrument output.

6.6 All other original Batch-specific documents in the possession of the Laboratory, including, but not limited to, the following documents.

6.6.1 Telephone contact logs.

6.6.2 Copies of personal logbook pages.

6.6.3 All handwritten Case-specific notes.

6.6.4 Any other Case-specific documents not covered by the above.

NOTE: All Case-related documentation may be used or admitted as evidence in subsequent legal proceedings. Any other Case-specific documents generated after the CBF is sent to EPA, as well as copies that are altered in any fashion, are also deliverables to EPA. (Original to the Region-RSCC and a copy to the CLASS contractor.)

If the Laboratory submits Batch-specific documents to EPA after submission of the CBF, the documents shall be numbered as an addendum to the CBF and a revised QDC-2 form shall be submitted, or the documents shall be numbered as a new CBF and a new QDC-2 form shall be submitted to the Region-RSCC only.

7 Data in Computer-Readable Form

The Sample and QC Electronic Data Package shall be reported via a telecommunications network to a central mainframe computer located in Research Triangle Park, NC. Additional information about the QTM data transfer system can be found in Section V, On-Line Data Transfer System.

If the Contractor wishes to use an electronic data reporting format other than the one specified, equivalence must be demonstrated and approved by the APO prior to the award of the contract.

In the event of data transfer system failure, the Contractor shall send a hardcopy of the sample and QC data summary (Form QI - QVII) to the Region-RSCC and to the Region-client by overnight delivery. The Contractor shall also send a diskette of the sample and QC summary data, in EPA-approved format, to the CLASS contractor by overnight delivery. The Contractor shall immediately contact the CLASS contractor and the Region-client or Region-RSCC if the data transfer system or the data formatting and forms generating software fails.

8 Extracts

The Contractor shall preserve sample extracts at 4°C (± 2°C) in bottles/vials with Teflon-lined septa. Extract bottles/vials shall be labeled with EPA sample number, Case number, and Batch number. A logbook of stored extracts that lists EPA sample numbers and associated Case and Batch numbers shall be maintained.

The Contractor is required to retain extracts for 21 days following hardcopy data submission. During that time, the Contractor shall submit extracts and associated logbook pages within seven days of receiving a written request from the APO or the CLASS contractor.

SECTION III

FORMS INSTRUCTION GUIDE

This section includes specific instructions for the completion of all required Quick Turnaround Method Data Reporting Forms. Each of the forms is specific to a given fraction (i.e., volatiles, polynuclear aromatic hydrocarbons, phenols, pesticides, and Aroclors). The Contractor shall submit only those forms pertaining to the fractions analyzed for a given sample or samples. For instance, if a sample is scheduled for volatile analysis only, provide only volatile data reporting forms (i.e., Forms QI-VOA - QVII-VOA). These instructions are arranged in the following order:

1 General Information and Header Information

2 Quick Turnaround Method Analysis Data Sheets (Form QI, QIA, and QIB)

3 Laboratory Control Sample (LCS) Data Sheet (Form QII)

4 Performance Verification Standard (PVS) Data Sheet (Form QIII)

5 Initial Calibration Sheet (Form QIVA and QIVB)

6 Calibration Check Sheet (Form QV)

7 Analytical Sequence Summary (Form QVI)

8 Narrative (Form QVII)

9 Sample Log-In Sheet (Form QDC-1)

10 Document Inventory Sheet (Form QDC-2)

1 <u>General Information and Header Information</u>

Values shall be reported on the forms according to the individual form instructions in this Section.

1.1 <u>All</u> characters which appear on the data reporting forms presented in the Statement of Work (SOW) (Exhibit B, Section IV) <u>shall</u> be reproduced by the Contractor when submitting data, and the format of the forms submitted <u>shall be identical</u> to that shown in this SOW. No information may be added, deleted, or moved from its specified position without <u>prior written</u> approval of the EPA APO. The names of the various fields and compounds (e.g., "Lab Code", "Benzene") <u>shall</u> appear as they do on the forms in the contract.

1.2 Alphabetical entries made on the forms by the Contractor shall be in ALL UPPERCASE letters. If an entry does not fill the entire blank space provided on the form, null characters shall be used to remove the remaining underscores that comprise the blank line. (See Exhibit H for more detailed instructions.) However, do not remove the underscores or vertical bar characters that delineate "boxes" on the forms.

1.3 Six pieces of information are common to the header sections of each data reporting form. They are: Lab Name, Contract, Lab Code, Case No., Batch No., and Special Analytical Service (SAS) No. (if applicable). This information shall be entered on every form and must be the same on every form.

1.3.1 The "Lab Name" shall be the name chosen by the Contractor to identify the Laboratory. It may not exceed 25 characters.

1.3.2 The "Contract" is the number of the EPA contract under which the analyses were performed. In no case shall multiple laboratories operate under a corporate-wide contract.

1.3.3 The "Lab Code" is an alphabetical abbreviation of up to six letters, assigned by EPA, to identify the Laboratory and aid in data processing. This code shall be assigned by EPA at the time a contract is awarded, and shall not be modified by the Contractor, except at the direction of EPA. If a change of name or ownership occurs at the Laboratory, the lab code shall remain the same until the Contractor is directed by EPA to use another lab code assigned by the EPA.

1.3.4 The "Case No." is the EPA-assigned Case number (up to five characters) associated with the sample, and reported on the QTM TR/COC form.

1.3.5 The "Batch No." will be indicated on the QTM TR/COC. If however, the "Batch No." is not indicated on the QTM TR/COC, the laboratory shall assign it as the EPA sample number of the first sample received in the Batch. When several samples are received together in the first Batch shipment, the Batch number shall be the lowest sample number (considering both numbers and letters) in the first group of samples received under that Batch.

1.3.6 The "SAS No." is the EPA assigned number for analyses performed under Special Analytical Services. If the samples are to be analyzed under SAS only and reported on these forms, then enter the SAS number in both the "SAS No." and "Case No." fields. If samples are analyzed according to the "Routine Analytical Services" (RAS) IFB and have additional "SAS" requirements, then list both SAS No. and Case No. on the forms. If the analyses have

no SAS requirements, leave "SAS No." blank. NOTE: Some samples in a Batch may have a SAS No. while others do not.

1.4 The "Sequence No." is also common to most of the forms. The Sequence No. is a laboratory-assigned number (up to two characters) that is used to group sample data with their associated QC data within a fraction. This number is used by the QTM software in generating the Analytical Sequence Summary (Form VI). The software sorts the data using the Case, Batch, and Sequence number. If two instruments are used to analyze a fraction for a Batch of samples, two different sequence numbers (e.g., "01" and "02") should be assigned. Sequence numbers among the different fractions can be the same (e.g., a Sequence number of "01" for both volatiles and PAH). (See the QTM Software Users Guide for more details.)

1.5 The other information common to most of the forms is the "EPA Sample No." This number appears in the upper right-hand corner of Forms QI, QIA, and QIB (NOTE: Forms QIA and QIB are for Aroclors analysis only).

All samples, LCSs, PVSs, method blanks, instrument blanks, and standards shall be identified with an EPA sample number. For field samples, the EPA sample number is the unique identifying number given in the QTM TR/COC form that accompanied the sample.

1.5.1 For samples, the following identification scheme shall be used as the "EPA Sample No.":

QXXXXX = original sample
QXXXXXRE = reanalyzed sample
QXXXXXDL = sample analyzed at a secondary dilution
QXXXXX-Y = subsample number for multi-phase samples

where: XXXXX indicates the five character sample number

Y is a suffix number 1,2,3,... etc. to differentiate between multi-phase samples (e.g., QXXXXX-1 is the subsample number for the first phase unit). If reanalysis or dilutions are required for a sample phase, the suffix RE and/or DL shall follow the phase suffix number (e.g., QXXXXX-1RE).

1.5.2 For blanks and QC samples, the following identification scheme shall be used as the "EPA Sample No."

Volatile method blanks shall be identified as QVOBLK##.
Volatile instrument blanks shall be identified as QVOIBLK##.
Volatile Laboratory Control Samples shall be identified as QVOLCS##.

Volatile Performance Verification Standards shall be identified as QVOPVS##.

PAH method blanks shall be identified as QPABLK##.
PAH instrument blanks shall be identified as QPAIBLK##.
PAH Laboratory Control Samples shall be identified as QPALCS##.
PAH Performance Verification Standards shall be identified as QPAPVS##.

Phenol method blanks shall be identified as QPHBLK##.
Phenol instrument blanks shall be identified as QPHIBLK##.
Phenol Laboratory Control Samples shall be identified as QPHLCS##.
Phenol Performance Verification Standards shall be identified as QPHPVS##.

Pesticide method blanks shall be identified as QPEBLK##.
Pesticide instrument blanks shall be identified as QPEIBLK##.
Pesticide Laboratory Control Samples shall be identified as QPELCS##.
Pesticide Performance Verification Standards shall be identified as QPEPVS##.

Aroclor method blanks shall be identified as QARBLK##.
Aroclor instrument blanks shall be identified as QARIBLK##.
Aroclor Laboratory Control Samples shall be identified as QARLCS##.
Aroclor Performance Verification Standards shall be identified as QARPVS##.

NOTE: "##" is a contractor-defined identification number.

The "EPA Sample No." shall be unique for each QC sample and blank within a Batch. If more than one sequence is run within a batch, the sample number assigned by the Laboratory must be unique for the batch, i.e., a blank in sequence one must not have the same EPA Sample No. as any in sequence two. Within a fraction, a laboratory may achieve this uniqueness by replacing the two-character "##" suffix of the identifier with one or two characters or numbers, or a combination of both.

For example, given a batch with two sequences and two method blanks within each sequence, the blanks may be identified as follows:

Sequence 1: QVOBLK01 and QVOBLK02
Sequence 2: QVOBLK03 and QVOBLK04

If an instrument blank is used in place of a method blank (see method blank "Frequency" section in Exhibit D) the Laboratory shall use the character "Z" for the first "#" in the EPA Sample No. (e.g., QVOBLKZ1, QVOBLKZ2, etc.).

If an LCS extract solution is used in place of the original LCS solution (see LCS "Frequency" section in Exhibit D) the Laboratory shall use the character "Z" for the first "#" in the EPA Sample No. (e.g., QVOLCSZ1, QVOLCSZ2, etc.).

1.5.3 For initial calibration and calibration check standards the following identification scheme shall be used as the "EPA Sample No.":

QFSTD####

where:

F = fraction (VO for volatiles, PA for polynuclear aromatic hydrocarbons, PH for phenols, and PE for pesticides).

STD = indicates a standard

= the concentration in µg/L for volatile standards or the amount injected in ng for phenol and polynuclear aromatic hydrocarbon and amount injected in pg for pesticide (for multi-concentration standards use the lowest concentration).

For Aroclor initial and calibration check standards, the following identification scheme shall be used for the "EPA Sample No."

Name	EPA Sample No.
Aroclor 1221	QAR1221####
Aroclor 1232	QAR1232####
Aroclor 1242	QAR1242####
Aroclor 1248	QAR1248####
Aroclor 1254	QAR1254####
Aroclor 1016/1260 mixture	QAR1660####
Toxaphene	QTOXAP####

= the amount injected in pg (e.g., if 20 pg is injected for Aroclor 1232, the proper convention would be QAR12320020).

1.6 Most pieces of information are common to many of the Data Reporting Forms. These include: Matrix, Sample weight or volume, Lab Sample ID, and Instrument ID.

1.6.1 For "Matrix," enter "SOIL/SOLID" for soil/solid samples, "WATER" for water samples, or enter (up to 10 characters) other types of matrices (e.g., oil, wipes, etc.). The matrix must be spelled out. Abbreviations such as "S,""W," or "O" shall not be used. Note: For volatile oil samples enter "OIL-MNM" for methanol non-miscible samples, "OIL-MMAM" for methanol miscible/aqueous miscible samples, and "OIL-MMANM" for methanol miscible/aqueous non-miscible samples.

1.6.2 For "Sample wt./volume/other," enter the number of grams or milliliters of sample used or other amounts (e.g., area for wipe samples).

1.6.3 "Lab Sample ID" is an optional laboratory-generated internal identifier. Up to 12 alphanumeric characters may be reported here. If the contractor does not have a Lab Sample ID, this field may be left blank.

1.6.4 "Instrument ID" is a unique laboratory-assigned 10 character alphanumeric code to identify a particular instrument. The identifier used by the Laboratory must include some indication of the manufacturer and/or model number of the instrument, and contain additional characters that differentiate between all instruments of the same type in the Laboratory.

1.7 For rounding off numbers, observe the following common rules. If the number following those to be retained is less than five, drop it (round down). If the number is greater than five, drop it and increase the last number to be retained by one (round up). If the number following the last digit to be retained equals five, round up if the number to be retained is odd, and round down if that number is even.

1.8 All times shall be reported using the military convention (e.g., 11PM is 2300).

2 Quick Turnaround Method Analysis Data Sheets (Form QI for PAH, VOA, PHEN, and PEST and Forms QIA and QIB for PCB)

These forms are used for tabulating and reporting sample, method blank, and instrument blank analysis results and retention time information for target compounds. These forms are also used to report all retention time data for the LCS, PVS, and calibration check standards. If not all fractions are requested for analysis, only the pages specifically required shall be submitted. For example, if only volatiles analysis is requested, submit only Form QI-VOA; if the PCB analysis is the only analysis requested, only Form QIA-PCB and QIB-PCB shall be submitted for that sample.

2.1 The Laboratory shall enter on Form QI the mean RRT and RT values from the initial calibration for each field sample and QC sample. For Aroclors analysis, two Form QIs must be completed: Form QIA (analyte concentration and SMC results) and Form QIB (RRT and RT identification windows). If RRT's are used for identification purposes, enter both the RRT and RT for positive compound results. If RT's are used for identification purposes enter only the RT values. RRT and RT values for positive compound results that are outside the identification windows calculated from the initial calibration shall be flagged with an asterisk "*" (see Exhibit D).

2.2 Complete the header information on each page of Form QI that is required, according to the instructions in Section III, paragraph 1.

2.3 "Date Received" is the date of sample receipt at the Laboratory, as recorded on the QTM TR/COC form. It should be entered in MM/DD/YY format.

2.4 "Time Received" is the time of sample receipt reported in military convention (e.g., noon is 1200 and 11PM is 2300).

2.5 "Date Analyzed" is the date of sample analysis. It should be entered in MM/DD/YY format.

2.6 "Time Analyzed" is the time of sample analysis reported in military convention (e.g., noon is 1200 and 11PM is 2300).

2.7 Enter Yes for "Additional Cleanup" if sulfur cleanup is performed (for PEST and PCB only).

2.8 If a sample has been diluted for analysis, enter the "Dilution Factor" as a single whole number, such as "100" for a 1 to 100 dilution of the sample. If a sample was not diluted, enter "1".

Note: The calculated dilution factor shall consider all factors which affect the sample CRQL. Some common examples include: extraction or analysis of a smaller sample aliquot; dilution of a sample or sample extract; and dilution of a smaller aliquot of a methanol extract for volatiles analysis.

2.9 The appropriate concentration "Units" shall be entered. Use "µg/L" for water samples, "µg/kg" (wet weight basis) for soil/solid and oil samples, and enter (up to 5 alphanumeric characters) other concentration units (e.g., "$\mu g/m^2$".)

2.10 For the PAH, PHE, PEST, and PCB forms, enter in the "Extraction Type" field "SPE" for solid phase extracted samples and "SOLVENT" for solvent extracted samples.

2.11 Enter in the "Quantitation Type" field 1, 2, or 3 depending on the method of quantitation used. If mean calibration factors from the initial calibration were used for quantitation, enter "1". If mid-point calibration factors from the initial calibration were used for quantitation, enter "2". If K-curve calibration from the initial calibration were used for quantitation, enter "3". Enter "2" as the quantitation type for all Aroclors analyses.

2.12 For positively identified target compounds, the Contractor shall report the concentrations detected as uncorrected for blank contaminants.

NOTE: Calculations based on dry weights may occasionally be requested. If a request is made for dry weight calculations, the Laboratory shall determine the percent moisture (document in the narrative, see paragraph 8.3) for the relevant sample(s) and perform appropriate calculations so that the reported sample target compound concentrations are based on dry weights. The Laboratory shall determine the sample percent moisture and calculate the sample concentration based on dry weight as described in Exhibit D, Appendix A.

2.13 Report all "Analyte Concentration" results to two significant figures, except for the SMC area, which shall be reported to six significant figures.

2.14 If the "Analyte Concentration" result is a value greater than or equal to the quantitation limit (Exhibit C), report the value.

2.15 Every sample, method blank, instrument blank, and QC sample will have its SMC RT compared to that of the mean SMC RT calculated from the initial calibration. If the SMC RT in the sample, method blank, instrument blank, or QC sample is not within ± 1.0 percent of the mean RT of the SMC calculated from the initial calibration analysis, the RT% D data must be flagged with an asterisk "*".

2.16 Under the column labeled "Q" for qualifier, flag each result with the specific Data Reporting Qualifiers listed below. The Contractor is encouraged to use additional flags or footnotes. The definition of such flags must be explicit and must be included on the Batch Narrative. For reporting results to the EPA, the following contract specific qualifiers shall be used. The 13 qualifiers defined below shall not be modified by the Laboratory. Up to five qualifiers may be reported on Form QIs for each compound.

The Laboratory shall only use the A, L, M, P, S, and T qualifiers with preliminary data results (see Section II, paragraph 4) that are reported prior to the sample and QC electronic data package deliverables.

Note: The reporting qualifiers listed below are used with data generated which have met all method specified QA/QC requirements.

The 13 EPA-defined qualifiers to be used are as follows:

U - Indicates compound was analyzed for but not detected. The sample quantitation limit must be corrected for dilution. For example, 50U for phenol in water is used if the sample final volume is the protocol-specified final volume. If a 1 to 10 dilution of extract is necessary, the reported limit is 500U.

J - Indicates an estimated value. This flag is used when the chromatography indicates the presence of a compound that meets the identification criteria but the result is less than the sample quantitation limit (CRQL) but greater than zero. For example, if the sample quantitation limit is 20 μg/L, but a concentration of 3 μg/L is calculated, report it as 3J. The sample quantitation limit must be adjusted for dilution.

B - This flag is used when the target compound or non-target compound within the target compound window is detected above the CRQL and the associated instrument blank (other than the first instrument blank in the analytical sequence) contains the same compound at a concentration between one-half and two times the CRQL.

E - This flag identifies compounds whose concentrations exceed the calibration range of the GC instrument for that specific analysis. All analytes having a response greater than full scale should have the concentration flagged with an "E" on Form QI for the original analysis. If the dilution of the extract causes any compounds identified in the first analysis to be below the calibration range in the second analysis, then the results of both analyses shall be reported on separate Form QI. The Form QI for the diluted sample shall have the "DL" suffix appended to the EPA sample number. NOTE: <u>Dilutions shall only be performed as specified in this SOW or as directed by the TPO or APO.</u>

D - This flag identifies all compounds identified in an analysis at a secondary dilution factor. If a sample or extract is reanalyzed at a higher dilution factor, as in the "E" flag above, the "DL" suffix is appended to the EPA sample number on Form QI for the diluted sample, and all concentration values reported on Form QI are flagged with the "D" flag.

S - This flag identifies all field sample and blank data (detects and non-detects) in which the SMC recovery is outside the advisory recovery range of 50-150 percent.

P - This flag identifies all field sample data in which the QC criteria for the PVS were not satisfied. Flag the outlier compound(s) "P" in all associated field samples. Laboratories shall only flag those compounds which exceeded the primary

recovery criteria in the PVS (outside 75-125 percent but within 50-150 percent, see PVS section in Exhibit D).

T - This flag identifies all field sample data in which absolute retention times were used to identify target compounds. Use of absolute retention times is required when the SMC recovery is less than 10 percent, greater than 200 percent, or if peak interferences are present.

L - This flag identifies all field sample data in which the QC criteria for the LCS were not satisfied. Flag the outlier compound(s) "L" in all associated field samples.

M - This flag identifies all field sample data in which there was a shift in the retention time of the SMC greater than the QC criterion.

N - This flag is used to indicate presumptive evidence/absence of a target compound. This flag is used to identify positive target compound results in which the absolute and/or relative retention times are outside the identification windows. This flag is also used to identify suspected false-negative results (e.g., target compounds slightly outside the identification window).

A - This flag is used to identify preliminary form I data results. All detected and non-detected (U) preliminary form I data are qualified "A."

X - Other specific flags may be required to properly define the results. If used, they must be fully described and such description attached to the Sample and QC Hardcopy Data Package and the Batch Narrative. Begin by using "X". If more than one flag is required, use "Y" and "Z", as needed. If more than five qualifiers are required for a sample result, use the "X" flag to combine several flags, as needed. For instance, the "X" flag might combine the "A", "B", and "D" flags for some samples.

The combination of flags "B" and "U" (i.e.,"BU" or "UB") is expressly prohibited. Blank contaminants are flagged "B" <u>only</u> when they are also detected in the sample.

If any saturated non-target compound chromatographic peaks are evident or if any chromatographic peaks overlap more than one RRT and/or RT target compound windows, the Laboratory shall use the "E,N" flags on Form I to indicate this situation (see Exhibit D.)

If analyses at two different dilution factors are performed (see Exhibit D), follow the data reporting instructions given in Exhibit D and with the "D" and "E" flags above.

See Exhibit D for more detailed instructions concerning the use of these data qualifiers.

2.17 SMC results shall be summarized at the bottom of Form QI. "AMOUNT" is the calculated amount of the SMC in ng injected (pg for pesticides and Aroclors) or total ng for VOAs. "%REC" is the percent recovery of the SMC (Note: enter 999 if recovery is greater than 998% or if peak interferences are present). "SMC area" is the area of the SMC from the GC data system output report. "RT" is the retention time of the SMC in this analysis. "IC $\overline{RT}$" is the mean retention time of the SMC calculated from the initial calibration analyses. "RT %D" is the percent difference between the retention time of the SMC in this analytical run compared to the mean RT of the SMC calculated from the initial calibration standards. RT% D results that are outside QC limits shall be flagged with an asterisk "*" (see Exhibit D).

2.18 Enter only the retention time data (RRT and RT) and the appropriate header information on Form QI for the PVS, LCS, and calibration check standards. Leave all other fields (e.g., "Analyte Concentration", "Q", and SMC data) blank.

2.19 When entering retention time data on Form QI for the LCS, PVS, and calibration check standards, report both the RRT and RT data on Form QI for all fractions except Aroclors where the RRT and RT data are reported on Form QIB-PCB. Enter only the appropriate header information as described below.

2.19.1 For the LCS enter the EPA Sample No., Lab Name, Contract, Lab Code, SAS No. (if applicable), Case No., Batch No., Sequence No., Instrument ID, Lab Sample ID. (if used), Date Analyzed, Time Analyzed, Matrix, Quantitation Type, and Extraction Type (for PAH, phenol, pesticide, and Aroclors).

2.19.2 For the PVS and calibration check standard enter the EPA Sample No., Lab Name, Contract, Lab Code, SAS No. (if applicable), Case No., Batch No., Sequence No., Instrument ID, Lab Sample ID. (if used), Date Analyzed, Time Analyzed, and Quantitation Type (PVS only).

2.20 RRT and RT values that are outside the identification windows calculated from the initial calibration shall be flagged with an asterisk "*" (see Exhibit D).

3 Laboratory Control Sample (LCS) Data Sheet (Form QII)

This form is used to report the results of LCS analyses. (NOTE: All LCS retention time data are reported on Form QI, see Section III, paragraph 2.)

3.1 Complete the header information as instructed in Section III, paragraph 1, including the EPA sample number for the LCS.

3.2 For the PAH, PHE, PEST, and PCB forms, enter in the "Extraction Type" field "SPE" for solid phase extracted samples and "SOLVENT" for solvent extracted samples.

3.3 Enter the "Amount Added" in terms of total ng on column. Enter the "Amount Observed" in terms of total ng recovered.

3.4 The Laboratory shall determine the percent recovery for each spiked analyte. LCS percent recovery results that are outside QC limits shall be flagged with an asterisk "*" (see Exhibit D).

3.5 SMC results shall be summarized at the bottom of Form QII. "AMOUNT" is the calculated amount of the SMC in ng injected (pg for pesticides and Aroclors) or total ng for VOAs. "%REC" is the percent recovery of the SMC (Note: enter 999 if recovery is greater than 998% or if peak interferences are present). "SMC area" is the area of the SMC from the GC system output report. "RT" is the retention time of the SMC. "IC $\bar{RT}$" is the mean retention time of the SMC calculated from the initial calibration standards. "RT %D" is the percent difference between the retention time of the SMC in the LCS compared to the mean retention time "IC $\bar{RT}$" calculated from the initial calibration. RT% D results that are outside QC limits shall be flagged with an asterisk "*" (see Exhibit D).

4 Performance Verification Standard (PVS) Data Sheet (Form QIII)

This form is used to report the results of PVS analyses. (NOTE: All PVS retention time data are reported on Form QI, see Section III, paragraph 2.)

4.1 Complete the header information as instructed in Section III, paragraph 1, including the EPA sample number for the PVS.

4.2 Enter the "Amount Added" in terms of total ng on column. Enter the "Amount Observed" in terms of total ng recovered.

4.3 The PVS is two times (2x) the concentration of the low level initial calibration standard (see Exhibit D). The Laboratory shall determine the percent recovery for each compound. PVS

percent recovery results that are outside QC limits shall be flagged with an asterisk "*".

4.4 "Resol. % Valley" is the GC resolution between the peaks specified in Exhibit D. "Resol. % Valley" results that are outside QC limits shall be flagged with an asterisk "*". For the Aroclors analysis, the Laboratory will report only the highest percent valley result.

4.5 SMC results shall be summarized at the bottom of Form QITI. "AMOUNT" is the calculated amount of the SMC in ng injected (pg for pesticides and Aroclors) or total ng for VOAs. "%REC" is the percent recovery of the SMC (Note: enter 999 if recovery is greater than 998% or if peak interferences are present). "SMC area" is the area of the SMC from the GC system output report. "RT" is the retention time of the SMC. "IC $\bar{RT}$" is the mean retention time of the SMC calculated from the initial calibration standards. "RT %D" is the percent difference between the retention time of the SMC in the PVS compared to the mean SMC retention time "IC $\bar{RT}$" calculated from the initial calibration.. RT% D results that are outside QC limits shall be flagged with an asterisk "*" (see Exhibit D)

5 Initial Calibration Sheet (Form QIVA and QIVB)

After a GC system has undergone the initial calibration at the specific concentration levels described in Exhibit D, and after all initial calibration technical acceptance criteria have been met, the Laboratory shall complete and submit Forms QIVA and QIVB for all initial calibrations that apply to the samples, blanks, LCSs, and PVSs in the Batch, regardless of when the initial calibrations were performed.

5.1 Complete all header information on both forms as described in Section III, paragraph 1. Enter the "Case No." and "Batch No." for the current data package, regardless of the original Case for which the initial calibration was performed. Enter "Instrument ID", the date and time of the calibration analyses, and the standard concentrations.

5.2 Enter calibration factor data for each of the calibration points on Form QIVA. Enter under the column labeled "$\bar{CF}$", the mean of the calibration factors for each analyte. The Laboratory shall report the %RSD for all compounds and the SMC. For the Aroclors analysis, calculate and report only %RSD values for the 1016/1260 standards and the SMC. All %RSD values outside the QC limits must be flagged with an asterisk "*".

5.3 "Resol. % Valley" is the GC resolution between the peaks specified in Exhibit D. "Resol. % Valley" results that are outside QC limits shall be flagged with an asterisk "*".

5.4 Enter relative and absolute retention time data on Form QIVB. Enter relative and absolute retention time data for each calibration standard and enter the "Mean RRT" and "Mean RT" values under the appropriate columns. Note: For Aroclors, report RRT/RT from the low concentration standard.

6 Calibration Check Sheet (Form QV)

After a GC system has undergone the calibration check at the specified concentration level (mid level initial calibration standard) described in Exhibit D, and after all calibration check technical acceptance criteria have been met, the Laboratory shall complete and submit all Form QV for all calibration checks that apply to the field and QC samples in the Batch. (NOTE: All calibration check retention time data are reported on Form QI, see Section III, paragraph 2.)

6.1 Complete all header information as in Section III, paragraph 1. Enter the "Case No." and "Batch No." for the current data package, regardless of the original Case for which the calibration check was performed. Enter "Instrument ID", the date and time of the calibration, and the standard concentration. Enter the calibration factor data for the calibration check. The Laboratory shall report the %D for all compounds and the SMC. For the Aroclors analysis, calculate and report only the %D values for the 1016/1260 standards and the SMC. All %D values outside the QC limits shall be flagged with an asterisk "*".

6.2 Enter under the column labeled "Initial $\overline{CF}$", the mean calibration factor calculated from the initial calibration for each compound. Calculate the percent difference (%D) between the calibration factors.

6.3 SMC results shall be summarized at the bottom of Form QV. "SMC area" is the area of the SMC from the GC system output report. "RT" is the retention time of the SMC. "IC $\overline{RT}$" is the mean retention time of the SMC calculated from the initial calibration standards. "RT %D" is the percent difference between the retention time of the SMC in the calibration check compared to the mean retention time "IC $\overline{RT}$" calculated from the initial calibration. RT% D results that are outside QC limits shall be flagged with an asterisk "*" (see Exhibit D).

6.4 "Resol. % Valley" is the GC resolution between the peaks specified in Exhibit D. "Resol. % Valley" results that are outside QC limits shall be flagged with an asterisk "*". For the Aroclors analysis, the Laboratory will report only the highest percent valley result (see PCB Exhibit D, Section 11).

7 Analytical Sequence Summary (Form QVI)

This form is required for each analytical sequence for each GC system and for each GC column used to analyze samples. Form QVI summarizes the date and time of analysis of field and QC samples and standards specific to a particular Batch and associated with each initial calibration or valid calibration check.

7.1 Complete the header information on each Form QVI required according to the instructions in Section III, paragraph 1.

7.2 "Analytical Sequence Start Date" and "Analytical Sequence Start Time" is the date and time that the current analytical sequence was started. The initial calibration analytical sequence begins with the injection time of the first initial calibration standard and the daily calibration analytical sequence begins with the injection time of the first instrument blank.

7.3 "Analytical Sequence Stop Date" and "Analytical Sequence Stop Time" is the date and time that the analytical sequence ends with a final PVS. The final PVS standard in the initial calibration analytical sequence must be analyzed within 24 hours after the injection time of the first initial calibration standard and the final PVS standard in the daily calibration analytical sequence must be analyzed within 24 hours after the injection time of the first instrument blank. If the first PVS does not meet all QC criteria, a second PVS analysis may be performed within 26 hours after the start of the current analytical sequence.

7.4 List all field and QC samples and standards for a specific Batch analyzed under that initial calibration or valid calibration check in chronological order, by time of analysis (in military time). Enter "EPA Sample No.," "Lab Sample ID," "Date Analyzed," and "Time Analyzed" for all analyses listed on Form VI. Note: This summary form will be generated automatically by the QTM software furnished by EPA.

8 Narrative (Form QVII)

Complete the header information on each Form QVII required, according to the instructions in Section III, paragraph 1.

8.1 This page shall be clearly labeled "Narrative" and shall contain documentation of any QC, sample, shipment, and/or analytical problems encountered in processing and analyzing the samples reported in the data package. At a minimum, the laboratory shall identify on the Batch Narrative all samples that were analyzed in the analytical sequence, describe the sample matrices, any sample dilutions performed, and any difficulties encountered by the laboratory during sample analyses or with meeting method QC requirements.

8.2 The Laboratory shall specify in the volatiles Batch Narrative the target compounds associated with (detected by) each of the detectors (PID and ELCD) and in the phenols Batch Narrative the detector type used (PID or FID).

8.3 If dry weight calculations are requested, the percent moisture values for all relevant samples shall be documented in the Batch Narrative. The Laboratory shall also state in the Batch Narrative in bold print, verbatim: **"Sample concentrations for this Batch are based on dry weight calculations"**.

8.4 Whenever data from sample reanalyses are submitted, the Contractor shall state in the Batch Narrative for each reanalysis, whether the contractor considers the reanalysis to be billable, and if so, why. The Contractor shall also include any problems encountered (both technical and administrative), the corrective actions taken, and resolution.

8.5 If the VTSR date is adjusted for samples received during non-routine working hours as described in Exhibit A, Section III, paragraph 9.5, the Laboratory shall note this in the Batch Narrative(s).

If sample extractions and/or analyses were started after the receipt date and before the VTSR as defined in Exhibit A, Section III, paragraph 9.5, the Laboratory shall state in the Batch Narrative, verbatim: "The extraction and/or analyses of the following samples received during non-routine working hours were started after the sample receipt date/time and before the VTSR as defined in Exhibit A, Section III." A listing of all associated EPA sample numbers shall follow this statement.

8.6 The Laboratory shall submit a cover sheet with the hardcopy deliverables that states, verbatim: "I certify that this data package is in compliance with the terms and conditions of the contract, both technically and for completeness, for other than the conditions detailed above. Release of the data contained in this data package has been authorized by the Laboratory Manager or his designee, as verified by the following signature." This statement shall be directly followed by signature of the Laboratory Manager or his designee with a typed line below it containing the signer's name and title, and the date of signature. The electronically delivered Batch Narrative shall have, in place of the signature, the words "Signature Obtained."

9 Sample Log-In Sheet (Form QDC-1)

9.1 This form is used to document the receipt and inspection of samples and containers. One original copy of QDC-1 is required for each sample shipping container. If the samples in a single sample shipping container (e.g., coolers) are assigned to more than one Batch, the original Form QDC-1 shall be placed with the deliverables for the Batch of the lowest sample number and a copy of Form QDC-1 must be placed with

the deliverables for the other Batch(es). The copies should be identified as "copy(ies)," and the location of the original should be noted on the copies.

9.2 Sign and date the airbill (if present). Examine the shipping container and record the presence/absence of custody seals and their condition (e.g., intact, broken) in item 1 on Form QDC-1. Record the custody seal numbers in item 2.

9.3 Open the container, remove the enclosed sample documentation, and record the presence/absence of the combined QTM TR/COC form(s), the CLASS contractor forms (e.g., packing list), and airbills or airbill stickers in items 3-5 on Form QDC-1. Specify if there is an airbill present or an airbill sticker in item 5 on Form QDC-1. Record the airbill or sticker number in item 6.

9.4 Remove the samples from the shipping container(s), examine the samples and the sample tags (if present), and record the condition of the sample bottles (e.g., intact, broken, leaking) and presence or absence of sample tags in items 7 and 8 on Form QDC-1.

9.5 Review the sample shipping documents and complete the header information described in Section III, paragraph 1. Compare the information recorded on all the documents and samples and mark the appropriate answer in item 9 on Form QDC-1.

9.6 If there are no problems observed during receipt, sign and date (include time) Form QDC-1, the QTM TR/COC form, and write the sample numbers on Form QDC-1. Record the appropriate sample tags and assigned laboratory numbers, if applicable. The log-in date should be recorded at the top of Form QDC-1 and the date and time of cooler receipt at the Laboratory should be recorded in items 10 and 11. Cross out unused columns and spaces.

9.7 If there are problems observed during receipt or if an answer is marked with an asterisk (e.g., "absent*"), contact the CLASS contractor and document the contact as well as resolution of the problem in a CLP Communication Log. Following resolution, sign and date the forms as specified in the preceding paragraph and note, where appropriate, the resolution of the problem.

9.8 Record the fraction designation (if appropriate) and the specific area designation (e.g., refrigerator number) in the Sample Transfer block located in the bottom left corner of Form QDC-1. Sign and date the Sample Transfer block.

10 <u>Document Inventory Sheet (Form QDC-2)</u>

This sheet is used to record the inventory of the hardcopy deliverables.

10.1 Assemble the documents in the order specified on Form QDC-2 and in Section II of Exhibit B, and stamp each page with a consecutive number. (Do not number the QDC-2 form). Inventory the CBF by reviewing the document numbers and recording page number ranges in the columns provided. If there are no documents for a specific document type, enter "NA" in the empty space.

10.2 Certain laboratory specific documents related to the CBF may not fit into a clearly defined category. The Laboratory should review Form QDC-2 and determine the most appropriate place to insert documents.

SECTION IV

DATA REPORTING FORMS

SAMPLE LOG-IN SHEET

Lab Name: _____ Page _____ of _____

Received By (Print Name): _____ Log-in Date: _____

Received By (Signature): _____

Case Number: _____

Batch: _____

SAS Number: _____

		EPA SAMPLE #	CORRESPONDING SAMPLE TAG #	CORRESPONDING ASSIGNED LAB #	REMARKS: CONDITION OF SAMPLE SHIPMENT, ETC.
REMARKS:					
1. Custody Seal(s)	Present/Absent* Intact/Broken				
2. Custody Seal Nos.:	_____ _____				
3. QT Traffic Report/Chain-of-Custody Forms	Present/Absent*				
4. Packing List	Present/Absent*				
5. Airbill	Airbill/Sticker Present/Absent*				
6. Airbill No.:	_____ _____				
7. Sample Tags	Present/Absent*				
Sample Tag Numbers	Listed/Not Listed on Traffic Report/ Chain-of-Custody Forms				
8. Sample Condition:	Intact/Broken*/ Leaking				
9. Does information on chain-of custody forms, traffic report, and sample tags agree?	Yes/No*				
10. Date Received at Lab:	_____				
11. Time Received:	_____				
Sample Transfer					
Fraction: _____	_____				
Area #: _____	_____				
By : _____	_____				
On: _____	_____				

* Contact the CLASS contractor and attach record of resolution

Reviewed By: _____

Date: _____

Logbook No.: _____

Logbook Page No: _____

FORM QDC-1

ORGANICS COMPLETE BATCH FILE (CBF) INVENTORY SHEET

LABORATORY NAME _____ CITY/STATE _____

CASE NO. _____ BATCH NO. _____ BATCH NOS. TO FOLLOW _____ _____ _____ SAS NO. _____

CONTRACT NO. _____ SOW NO. _____

All documents delivered in the complete Batch file must be original documents where possible. (REFERENCE EXHIBIT B, SECTION II AND SECTION III.)

	PAGE NOs		CHECK	
	FROM	TO	LAB	EPA
1. Inventory Sheet (Form QDC-2) (Do not number)	____	____	____	____
2. Batch Narratives (Form QVII)	____	____	____	____
3. Traffic Report	____	____	____	____
4. Volatiles Data				
a. QC Data				
Lab Control Sample (Form QII-VOA)	____	____	____	____
Method Blank Summary (Form QI-VOA)	____	____	____	____
Performance Verification Standard (Form QIII-VOA)	____	____	____	____
Analytical Sequence Summary (Form QVI-VOA)	____	____	____	____
b. Sample Data	____	____	____	____
TCL Results - (Form QI-VOA)			____	____
Chromatograms for each sample			____	____
c. Standards Data (All Instruments)				
Initial Calibration Data (Form QIVA and QIVB-VOA)	____	____	____	____
Chromatograms and Integration Reports for all Standards	____	____	____	____
Calibration Check (Form QV-VOA)	____	____	____	____
5. PAH Data				
a. QC Data				
Lab Control Sample (Form QII-PAH)	____	____	____	____
Method Blank Summary (Form QI-PAH)	____	____	____	____
Performance Verification Standard (Form QIII-PAH)	____	____	____	____
Analytical Sequence Summary (Form QVI-PAH)	____	____	____	____
b. Sample Data	____	____	____	____
TCL Results - (Form QI-PAH)			____	____
Chromatograms for each sample			____	____

ORGANICS COMPLETE BATCH FILE (CBF) INVENTORY SHEET

CASE NO. _____ BATCH NO. _____ BATCH NOS. TO FOLLOW _____ _____ _____ SAS NO. _____

	PAGE NOs		CHECK	
	FROM	TO	LAB	EPA
c. Standards Data (All Instruments)				
Initial Calibration Data (Form QIVA and QIVB-PAH)	____	____	____	____
Chromatograms and Integration Reports for all Standards	____	____	____	____
Calibration Check (Form QV-PAH)	____	____	____	____
6. Phenols Data				
a. QC Data				
Lab Control Sample (Form QII-PHE)	____	____	____	____
Method Blank Summary (Form QI-PHE)	____	____	____	____
Performance Verification Standard (Form QIII-PHE)	____	____	____	____
Analytical Sequence Summary (Form QVI-PHE)	____	____	____	____
b. Sample Data	____	____	____	____
TCL Results - (Form QI-PHE)			____	____
Chromatograms for each sample			____	____
c. Standards Data (All Instruments)				
Initial Calibration Data (Form QIVA and QIVB-PHE)	____	____	____	____
Chromatograms and Integration Reports for all Standards	____	____	____	____
Calibration Check (Form QV-PHE)	____	____	____	____
7. Pesticides Data				
a. QC Data				
Lab Control Sample (Form QII-PEST)	____	____	____	____
Method Blank Summary (Form QI-PEST)	____	____	____	____
Performance Verification Standard (Form QIII-PEST)	____	____	____	____
Analytical Sequence Summary (Form QVI-PEST)	____	____	____	____
b. Sample Data	____	____	____	____
TCL Results - (Form QI-PEST)			____	____
Chromatograms for each sample			____	____
c. Standards Data (All Instruments)				
Initial Calibration Data (Form QIVA and QIVB-PEST)	____	____	____	____
Chromatograms and Integration Reports for all Standards	____	____	____	____
Calibration Check (Form QV-PEST)	____	____	____	____

ORGANICS COMPLETE BATCH FILE (CBF) INVENTORY SHEET

CASE NO. _____ BATCH NO. _____ BATCH NOS. TO FOLLOW _____ _____ _____ SAS NO. _____

	PAGE NOs		CHECK	
	FROM	TO	LAB	EPA
8. Aroclors Data				
a. QC Data				
Lab Control Sample (Form QII-PCB)	____	____	____	____
Method Blank Summary (Form QI-PCB)	____	____	____	____
Performance Verification Standard (Form QIII-PCB)	____	____	____	____
Analytical Sequence Summary (Form QVI-PCB)	____	____	____	____
b. Sample Data	____	____	____	____
TCL Results - (Form QI-PCB)			____	____
Chromatograms for each sample			____	____
c. Standards Data (All Instruments)				
Initial Calibration Data (Form QIVA and QIVB-PCB)	____	____	____	____
Chromatograms and Integration Reports for all Standards	____	____	____	____
Calibration Check (Form QV-PCB)	____	____	____	____
9. Miscellaneous Data				
Original preparation and analysis forms or copies of preparation and analysis logbook pages	____	____	____	____
Internal sample and sample extract transfer chain-of-custody forms	____	____	____	____
10. EPA Shipping/Receiving Documents				
Airbills (No. of shipments ___)	____	____	____	____
QT Traffic Report/Chain-of-Custody Forms	____	____	____	____
Sample Tags	____	____	____	____
Sample Log-In Sheet (Lab & QDC-1)	____	____	____	____
Batch Cover Sheet	____	____	____	____
Miscellaneous Shipping/Receiving Records (describe or list)				
_____	____	____	____	____
_____	____	____	____	____
11. Internal Lab Sample Transfer Records and Tracking Sheets (describe or list)				
_____	____	____	____	____
_____	____	____	____	____

ORGANICS COMPLETE BATCH FILE (CBF) INVENTORY SHEET

CASE NO. _____ BATCH NO. _____ BATCH NOS. TO FOLLOW _____ _____ _____ SAS NO. _____

	PAGE NOs		CHECK	
	FROM	TO	LAB	EPA
12. Other Records (describe or list)				
Telephone Communication Log				
_____	____	____	____	____
_____	____	____	____	____

13. Comments: _____

_____

_____

_____

Completed by: _____ _____ _____

(CLP Lab) (Signature) (Printed Name/Title) (Date)

Audited by: _____ _____ _____

(EPA) (Signature) (Printed Name/Title) (Date)

FORM QDC-2-4

EPA SAMPLE NO.

VOLATILES ANALYSIS DATA SHEET

Lab Name: Contract:
Lab Code: Case No.: Batch No.: Sequence No.:
SAS No.:
Instrument ID: Lab Sample ID:
Matrix: Date Received: / /
Sample wt./volume/other: Time Received: :
Dilution Factor: Date Analyzed: / /
Units: Wet-Weight Time Analyzed: :
Quantitation Type:

COMPOUND	ANALYTE CONCENTRATION	Q	RRT	IC $\overline{RRT}$	RT	IC $\overline{RT}$
vinyl chloride						
1,1-dichloroethene						
trans-1,2-dichloroethene						
1,1-dichloroethane						
cis-1,2-dichloroethene						
chloroform						
1,1,1-trichloroethane						
carbon tetrachloride						
benzene						
1,2-dichloroethane						
trichloroethene						
bromodichloromethane						
toluene						
tetrachloroethene						
chlorobenzene						
1,1,2,2-tetrachloroethan						
ethylbenzene						
bromoform						
m,p-xylene						
o-xylene						

SYSTEM MONITOR COMPOUND

System Monitor Compound (QC Limits)	AMOUNT	%REC (50-150)	SMC AREA	RT	IC $\overline{RT}$	RT %D (+/- 1%)
4-bromofluorobenzene						

* Value outside of QC limits.
U Compound analyzed for but not detected. Value represents the Contract Required Quantitation Limit (CRQL) for the specified analyte. (Note: CRQLs must be corrected for dilutions.)

VOLATILES LABORATORY CONTROL SAMPLE DATA SHEET

Lab Name: Contract:
Lab Code: Case No.: Batch No.: Sequence No.:
SAS No.:
EPA Sample No.: Instrument ID:
Lab Sample ID: Date Analyzed: / /
Matrix: Time Analyzed: :

COMPOUND	AMOUNT ADDED (ng)	AMOUNT OBSERVED (ng)	%REC
vinyl chloride			
1,1-dichloroethene			
trans-1,2-dichloroethene			
1,1-dichloroethane			
cis-1,2-dichloroethene			
chloroform			
1,1,1-trichloroethane			
carbon tetrachloride			
benzene			
1,2-dichloroethane			
trichloroethene			
bromodichloromethane			
toluene			
tetrachloroethene			
chlorobenzene			
1,1,2,2-tetrachloroethane			
ethylbenzene			
bromoform			
m,p-xylene			
o-xylene			

SYSTEM MONITOR COMPOUND

System Monitor Compound (QC Limits)	AMOUNT	%REC (50-150)	SMC AREA	RT	IC $\overline{RT}$	RT %D (+/- 1%)
4-bromofluorobenzene						

* Value outside of QC limits.

VOLATILES PERFORMANCE VERIFICATION STANDARD DATA SHEET

Lab Name: Contract:
Lab Code: Case No.: Batch No.: Sequence No.:
SAS No.:
EPA Sample No.: Instrument ID:
Lab Sample ID: Date Analyzed: / /
Time Analyzed: :

COMPOUND	AMOUNT ADDED (ng)	AMOUNT OBSERVED (ng)	%REC	RESOL. %VALLEY
vinyl chloride				
1,1-dichloroethene				
trans-1,2-dichloroethene				
1,1-dichloroethane				
cis-1,2-dichloroethene				
chloroform				
1,1,1-trichloroethane				
carbon tetrachloride				
benzene				
1,2-dichloroethane				
trichloroethene				
bromodichloromethane				
toluene				
tetrachloroethene				
chlorobenzene				
1,1,2,2-tetrachloroethane				
ethylbenzene				
bromoform				
m,p-xylene				
o-xylene				

SYSTEM MONITOR COMPOUND

System Monitor Compound (QC Limits)	AMOUNT	%REC (50-150)	SMC AREA	RT	IC $\overline{RT}$	RT %D (+/- 1%)
4-bromofluorobenzene						

* Value outside of QC limits.

VOLATILES INITIAL CALIBRATION SHEET

Lab Name: Contract:
Lab Code: Case No.: Batch No.: Sequence No.:

Instrument ID:
SAS No.:

	EPA SAMPLE NO.	LAB SAMPLE ID	DATE	TIME	STANDARD CONC
CAL #1					
CAL #2					
CAL #3					

COMPOUND	CF LOW	CF MID	CF HIGH	$\overline{CF}$	%RSD	RESOL. %VALLEY
vinyl chloride						
1,1-dichloroethene						
trans-1,2-dichloroethene						
1,1-dichloroethane						
cis-1,2-dichloroethene						
chloroform						
1,1,1-trichloroethane						
carbon tetrachloride						
benzene						
1,2-dichloroethane						
trichloroethene						
bromodichloromethane						
toluene						
tetrachloroethene						
chlorobenzene						
1,1,2,2-tetrachloroethane						
ethylbenzene						
bromoform						
m,p-xylene						
o-xylene						
4-bromofluorobenzene						

* Value outside of QC limits

VOLATILES INITIAL CALIBRATION SHEET

Lab Name: Contract:
Lab Code: Case No.: Batch No.: Sequence No.:

Instrument ID: SAS No.:

COMPOUND	RETENTION TIME (RT) L	M	H	MEAN
vinyl chloride				
1,1-dichloroethene				
trans-1,2-dichloroethene				
1,1-dichloroethane				
cis-1,2-dichloroethene				
chloroform				
1,1,1-trichloroethane				
carbon tetrachloride				
benzene				
1,2-dichloroethane				
trichloroethene				
bromodichloromethane				
toluene				
tetrachloroethene				
chlorobenzene				
1,1,2,2-tetrachloroethane				
ethylbenzene				
bromoform				
m,p-xylene				
o-xylene				
4-bromofluorobenzene				

COMPOUND	RELATIVE RETENTION TIME (RRT) L	M	H	MEAN
vinyl chloride				
1,1-dichloroethene				
trans-1,2-dichloroethene				
1,1-dichloroethane				
cis-1,2-dichloroethene				
chloroform				
1,1,1-trichloroethane				
carbon tetrachloride				
benzene				
1,2-dichloroethane				
trichloroethene				
bromodichloromethane				
toluene				
tetrachloroethene				
chlorobenzene				
1,1,2,2-tetrachloroethane				
ethylbenzene				
bromoform				
m,p-xylene				
o-xylene				
4-bromofluorobenzene				

VOLATILES CALIBRATION CHECK SHEET

Lab Name: Contract:
Lab Code: Case No.: Batch No.: Sequence No.:
SAS No.:
Instrument ID:
EPA Sample No.: Date Analyzed: / /
Lab Sample ID: Time Analyzed: :
Standard Concentration:

COMPOUND	INITIAL $\overline{CF}$	MID	%D	RESOL. %VALLEY
vinyl chloride				
1,1-dichloroethene				
trans-1,2-dichloroethene				
1,1-dichloroethane				
cis-1,2-dichloroethene				
chloroform				
1,1,1-trichloroethane				
carbon tetrachloride				
benzene				
1,2-dichloroethane				
trichloroethene				
bromodichloromethane				
toluene				
tetrachloroethene				
chlorobenzene				
1,1,2,2-tetrachloroethane				
ethylbenzene				
bromoform				
m,p-xylene				
o-xylene				
4-bromofluorobenzene				

SYSTEM MONITOR COMPOUND

System Monitor Compound (QC Limits)	SMC AREA	RT	IC $\overline{RT}$	RT %D (+/- 1%)
4-bromofluorobenzene				

* Value outside of QC limits.

VOLATILES ANALYTICAL SEQUENCE SUMMARY

Lab Name: Contract:
Lab Code: Case No.: Batch No.: Sequence No.:
SAS No.:
Instrument ID: Analytical Sequence Start Date: / /
Initial Calibration Date: / / Analytical Sequence Start Time: :
Analytical Sequence Stop Date: / /
Analytical Sequence Stop Time: :

	EPA SAMPLE NO.	LAB SAMPLE ID.	DATE ANALYZED	TIME ANALYZED
01			/ /	:
02			/ /	:
03			/ /	:
04			/ /	:
05			/ /	:
06			/ /	:
07			/ /	:
08			/ /	:
09			/ /	:
10			/ /	:
11			/ /	:
12			/ /	:
13			/ /	:
14			/ /	:
15			/ /	:
16			/ /	:
17			/ /	:
18			/ /	:
19			/ /	:
20			/ /	:
21			/ /	:
22			/ /	:
23			/ /	:
24			/ /	:
25			/ /	:
26			/ /	:
27			/ /	:
28			/ /	:
29			/ /	:
30			/ /	:
31			/ /	:
32			/ /	:
33			/ /	:
34			/ /	:
35			/ /	:
36			/ /	:
37			/ /	:
38			/ /	:
39			/ /	:
40			/ /	:

VOLATILES NARRATIVE

Lab Name: Contract:
Lab Code: Case No.: Batch No.:
SAS No.:

EPA SAMPLE NO.

PAH ANALYSIS DATA SHEET

Lab Name: Contract:
Lab Code: Case No.: Batch No.: Sequence No.:
SAS No.:
Instrument ID: Lab Sample ID:
Matrix: Date Received: / /
Sample wt./volume/other: Time Received: :
Dilution Factor: Date Analyzed: / /
Units: Wet-Weight Time Analyzed: :
Quantitation Type:
Extraction Type:

COMPOUND	ANALYTE CONCENTRATION	Q	RRT	IC $\overline{RRT}$	RT	IC $\overline{RT}$
naphthalene						
acenaphthylene						
acenaphthene						
fluorene						
phenanthrene						
anthracene						
fluoranthene						
pyrene						
benz[a]anthracene						
chrysene						
benzo[b]/[k]fluoranthene						
benzo[a]pyrene						
indeno[1,2,3-cd]pyrene						
dibenz[a,h]anthracene						
benzo[g,h,i]perylene						

SYSTEM MONITOR COMPOUND

System Monitor Compound (QC Limits)	AMOUNT	%REC (50-150)	SMC AREA	RT	IC $\overline{RT}$	RT %D (+/- 1%)
2-bromonaphthalene						

* Value outside of QC limits.
U Compound analyzed for but not detected. Value represents the Contract Required Quantitation Limit (CRQL) for the specified analyte. (Note: CRQLs must be corrected for dilutions.)

PAH LABORATORY CONTROL SAMPLE DATA SHEET

Lab Name: Contract:
Lab Code: Case No.: Batch No.: Sequence No.:
SAS No.:
EPA Sample No.: Instrument ID:
Lab Sample ID: Date Analyzed: / /
Matrix: Time Analyzed: :
Extraction Type:

COMPOUND	AMOUNT ADDED (ng)	AMOUNT OBSERVED (ng)	%REC
naphthalene			
acenaphthylene			
acenaphthene			
fluorene			
phenanthrene			
anthracene			
fluoranthene			
pyrene			
benz[a]anthracene			
chrysene			
benzo[b]/[k]fluoranthene			
benzo[a]pyrene			
indeno[1,2,3-cd]pyrene			
dibenz[a,h]anthracene			
benzo[g,h,i]perylene			

SYSTEM MONITOR COMPOUND

System Monitor Compound (QC Limits)	AMOUNT	%REC (50-150)	SMC AREA	RT	IC $\overline{RT}$	RT %D (+/- 1%)
2-bromonaphthalene						

* Value outside of QC limits.

PAH PERFORMANCE VERIFICATION STANDARD DATA SHEET

Lab Name: Contract:
Lab Code: Case No.: Batch No.: Sequence No.:
SAS No.:
EPA Sample No.: Instrument ID:
Lab Sample ID: Date Analyzed: / /
Time Analyzed: :

COMPOUND	AMOUNT ADDED (ng)	AMOUNT OBSERVED (ng)	%REC	RESOL. %VALLEY
naphthalene				
acenaphthylene				
acenaphthene				
fluorene				
phenanthrene				
anthracene				
fluoranthene				
pyrene				
benz[a]anthracene				
chrysene				
benzo[b]/[k]fluoranthene				
benzo[a]pyrene				
indeno[1,2,3-cd]pyrene				
dibenz[a,h]anthracene				
benzo[g,h,i]perylene				

SYSTEM MONITOR COMPOUND

System Monitor Compound (QC Limits)	AMOUNT	%REC (50-150)	SMC AREA	RT	IC $\overline{RT}$	RT %D (+/- 1%)
2-bromonaphthalene						

* Value outside of QC limits.

PAH INITIAL CALIBRATION SHEET

Lab Name: Contract:
Lab Code: Case No.: Batch No.: Sequence No.:

Instrument ID:
SAS No.:

	EPA SAMPLE NO.	LAB SAMPLE ID	DATE	TIME	STANDARD CONC
CAL #1					
CAL #2					
CAL #3					

COMPOUND	CF LOW	CF MID	CF HIGH	$\overline{CF}$	%RSD	RESOL. %VALLEY
naphthalene						
acenaphthylene						
acenaphthene						
fluorene						
phenanthrene						
anthracene						
fluoranthene						
pyrene						
benz[a]anthracene						
chrysene						
benzo[b]/[k]fluoranthene						
benzo[a]pyrene						
indeno[1,2,3-cd]pyrene						
dibenz[a,h]anthracene						
benzo[g,h,i]perylene						
2-bromonaphthalene						

* Value outside of QC limits

PAH INITIAL CALIBRATION SHEET

Lab Name: Contract:
Lab Code: Case No.: Batch No.: Sequence No.:

Instrument ID: SAS No.:

COMPOUND	RETENTION TIME (RT)			
	L	M	H	MEAN
naphthalene				
acenaphthylene				
acenaphthene				
fluorene				
phenanthrene				
anthracene				
fluoranthene				
pyrene				
benz[a]anthracene				
chrysene				
benzo[b]/[k]fluoranthene				
benzo[a]pyrene				
indeno[1,2,3-cd]pyrene				
dibenz[a,h]anthracene				
benzo[g,h,i]perylene				
2-bromonaphthalene				

COMPOUND	RELATIVE RETENTION TIME (RRT)			
	L	M	H	MEAN
naphthalene				
acenaphthylene				
acenaphthene				
fluorene				
phenanthrene				
anthracene				
fluoranthene				
pyrene				
benz[a]anthracene				
chrysene				
benzo[b]/[k]fluoranthene				
benzo[a]pyrene				
indeno[1,2,3-cd]pyrene				
dibenz[a,h]anthracene				
benzo[g,h,i]perylene				
2-bromonaphthalene				

PAH CALIBRATION CHECK SHEET

Lab Name: Contract:
Lab Code: Case No.: Batch No.: Sequence No.:
SAS No.:
Instrument ID:
EPA Sample No.: Date Analyzed: / /
Lab Sample ID: Time Analyzed: :
Standard Concentration:

COMPOUND	INITIAL $\overline{CF}$	MID	%D	RESOL. %VALLEY
naphthalene				
acenaphthylene				
acenaphthene				
fluorene				
phenanthrene				
anthracene				
fluoranthene				
pyrene				
benz[a]anthracene				
chrysene				
benzo[b]/[k]fluoranthene				
benzo[a]pyrene				
indeno[1,2,3-cd]pyrene				
dibenz[a,h]anthracene				
benzo[g,h,i]perylene				
2-bromonaphthalene				

SYSTEM MONITOR COMPOUND

System Monitor Compound (QC Limits)	SMC AREA	RT	IC $\overline{RT}$	RT %D (+/- 1%)
2-bromonaphthalene				

* Value outside of QC limits.

PAH ANALYTICAL SEQUENCE SUMMARY

Lab Name: Contract:
Lab Code: Case No.: Batch No.: Sequence No.:
SAS No.:
Instrument ID: Analytical Sequence Start Date: / /
Initial Calibration Date: / / Analytical Sequence Start Time: :
Analytical Sequence Stop Date: / /
Analytical Sequence Stop Time: :

	EPA SAMPLE NO.	LAB SAMPLE ID.	DATE ANALYZED	TIME ANALYZED
01			/ /	:
02			/ /	:
03			/ /	:
04			/ /	:
05			/ /	:
06			/ /	:
07			/ /	:
08			/ /	:
09			/ /	:
10			/ /	:
11			/ /	:
12			/ /	:
13			/ /	:
14			/ /	:
15			/ /	:
16			/ /	:
17			/ /	:
18			/ /	:
19			/ /	:
20			/ /	:
21			/ /	:
22			/ /	:
23			/ /	:
24			/ /	:
25			/ /	:
26			/ /	:
27			/ /	:
28			/ /	:
29			/ /	:
30			/ /	:
31			/ /	:
32			/ /	:
33			/ /	:
34			/ /	:
35			/ /	:
36			/ /	:
37			/ /	:
38			/ /	:
39			/ /	:
40			/ /	:

PAH NARRATIVE

Lab Name: Contract:
Lab Code: Case No.: Batch No.:
SAS No.:

EPA SAMPLE NO.

PHENOLS ANALYSIS DATA SHEET

Lab Name: Contract:
Lab Code: Case No.: Batch No.: Sequence No.:
SAS No.:
Instrument ID: Lab Sample ID:
Matrix: Date Received: / /
Sample wt./volume/other: Time Received: :
Dilution Factor: Date Analyzed: / /
Units: Wet-Weight Time Analyzed: :
Quantitation Type:
Extraction Type:

COMPOUND	ANALYTE CONCENTRATION	Q	RRT	IC $\overline{RRT}$	RT	IC $\overline{RT}$
phenol						
2-chlorophenol						
o-cresol						
m/p-cresol						
2-nitrophenol						
2,4-dimethylphenol						
2,4-dichlorophenol						
4-chloro-3-methylphenol						
2,4,5/6-trichlorophenol						
2,4-dinitrophenol						
4-nitrophenol						
2,3,4,6-tetrachloropheno						
4,6-dinitro-2-methylphen						
pentachlorophenol						

SYSTEM MONITOR COMPOUND

System Monitor Compound (QC Limits)	AMOUNT	%REC (50-150)	SMC AREA	RT	IC $\overline{RT}$	RT %D (+/- 1%)
o-bromophenol						

* Value outside of QC limits.
U Compound analyzed for but not detected. Value represents the Contract Required Quantitation Limit (CRQL) for the specified analyte. (Note: CRQLs must be corrected for dilutions.)

PHENOLS LABORATORY CONTROL SAMPLE DATA SHEET

Lab Name: Contract:
Lab Code: Case No.: Batch No.: Sequence No.:
SAS No.:
EPA Sample No.: Instrument ID:
Lab Sample ID: Date Analyzed: / /
Matrix: Time Analyzed: :
Extraction Type:

COMPOUND	AMOUNT ADDED (ng)	AMOUNT OBSERVED (ng)	%REC
phenol			
2-chlorophenol			
o-cresol			
m/p-cresol			
2-nitrophenol			
2,4-dimethylphenol			
2,4-dichlorophenol			
4-chloro-3-methylphenol			
2,4,5/6-trichlorophenol			
2,4-dinitrophenol			
4-nitrophenol			
2,3,4,6-tetrachlorophenol			
4,6-dinitro-2-methylphenol			
pentachlorophenol			

SYSTEM MONITOR COMPOUND

System Monitor Compound (QC Limits)	AMOUNT	%REC (50-150)	SMC AREA	RT	IC $\overline{RT}$	RT %D (+/- 1%)
o-bromophenol						

* Value outside of QC limits.

PHENOLS PERFORMANCE VERIFICATION STANDARD DATA SHEET

Lab Name: Contract:
Lab Code: Case No.: Batch No.: Sequence No.:
SAS No.:
EPA Sample No.: Instrument ID:
Lab Sample ID: Date Analyzed: / /
Time Analyzed: :

COMPOUND	AMOUNT ADDED (ng)	AMOUNT OBSERVED (ng)	%REC	RESOL. %VALLEY
phenol				
2-chlorophenol				
o-cresol				
m/p-cresol				
2-nitrophenol				
2,4-dimethylphenol				
2,4-dichlorophenol				
4-chloro-3-methylphenol				
2,4,5/6-trichlorophenol				
2,4-dinitrophenol				
4-nitrophenol				
2,3,4,6-tetrachlorophenol				
4,6-dinitro-2-methylphenol				
pentachlorophenol				

SYSTEM MONITOR COMPOUND

System Monitor Compound (QC Limits)	AMOUNT	%REC (50-150)	SMC AREA	RT	IC $\overline{RT}$	RT %D (+/- 1%)
o-bromophenol						

* Value outside of QC limits.

PHENOLS INITIAL CALIBRATION SHEET

Lab Name: Contract:
Lab Code: Case No.: Batch No.: Sequence No.:

Instrument ID:
SAS No.:

	EPA SAMPLE NO.	LAB SAMPLE ID	DATE	TIME	STANDARD CONC
CAL #1					
CAL #2					
CAL #3					

COMPOUND	CF LOW	CF MID	CF HIGH	$\overline{CF}$	%RSD	RESOL. %VALLEY
phenol						
2-chlorophenol						
o-cresol						
m/p-cresol						
2-nitrophenol						
2,4-dimethylphenol						
2,4-dichlorophenol						
4-chloro-3-methylphenol						
2,4,5/6-trichlorophenol						
2,4-dinitrophenol						
4-nitrophenol						
2,3,4,6-tetrachlorophenol						
4,6-dinitro-2-methylphenol						
pentachlorophenol						
o-bromophenol						

* Value outside of QC limits

PHENOLS INITIAL CALIBRATION SHEET

Lab Name: Contract:
Lab Code: Case No.: Batch No.: Sequence No.:

Instrument ID: SAS No.:

COMPOUND	RETENTION TIME (RT) L	M	H	MEAN
phenol				
2-chlorophenol				
o-cresol				
m/p-cresol				
2-nitrophenol				
2,4-dimethylphenol				
2,4-dichlorophenol				
4-chloro-3-methylphenol				
2,4,5/6-trichlorophenol				
2,4-dinitrophenol				
4-nitrophenol				
2,3,4,6-tetrachlorophenol				
4,6-dinitro-2-methylphenol				
pentachlorophenol				
o-bromophenol				

COMPOUND	RELATIVE RETENTION TIME (RRT) L	M	H	MEAN
phenol				
2-chlorophenol				
o-cresol				
m/p-cresol				
2-nitrophenol				
2,4-dimethylphenol				
2,4-dichlorophenol				
4-chloro-3-methylphenol				
2,4,5/6-trichlorophenol				
2,4-dinitrophenol				
4-nitrophenol				
2,3,4,6-tetrachlorophenol				
4,6-dinitro-2-methylphenol				
pentachlorophenol				
o-bromophenol				

PHENOLS CALIBRATION CHECK SHEET

Lab Name: Contract:
Lab Code: Case No.: Batch No.: Sequence No.:
SAS No.:
Instrument ID:
EPA Sample No.: Date Analyzed: / /
Lab Sample ID: Time Analyzed: :
Standard Concentration:

COMPOUND	INITIAL $\overline{CF}$	MID	%D	RESOL. %VALLEY
phenol				
2-chlorophenol				
o-cresol				
m/p-cresol				
2-nitrophenol				
2,4-dimethylphenol				
2,4-dichlorophenol				
4-chloro-3-methylphenol				
2,4,5/6-trichlorophenol				
2,4-dinitrophenol				
4-nitrophenol				
2,3,4,6-tetrachlorophenol				
4,6-dinitro-2-methylphenol				
pentachlorophenol				
o-bromophenol				

SYSTEM MONITOR COMPOUND

System Monitor Compound (QC Limits)	SMC AREA	RT	IC $\overline{RT}$	RT %D (+/- 1%)
o-bromophenol				

* Value outside of QC limits.

PHENOLS ANALYTICAL SEQUENCE SUMMARY

Lab Name: Contract:
Lab Code: Case No.: Batch No.: Sequence No.:
SAS No.:
Instrument ID: Analytical Sequence Start Date: / /
Initial Calibration Date: / / Analytical Sequence Start Time: :
Analytical Sequence Stop Date: / /
Analytical Sequence Stop Time: :

	EPA SAMPLE NO.	LAB SAMPLE ID.	DATE ANALYZED	TIME ANALYZED
01			/ /	:
02			/ /	:
03			/ /	:
04			/ /	:
05			/ /	:
06			/ /	:
07			/ /	:
08			/ /	:
09			/ /	:
10			/ /	:
11			/ /	:
12			/ /	:
13			/ /	:
14			/ /	:
15			/ /	:
16			/ /	:
17			/ /	:
18			/ /	:
19			/ /	:
20			/ /	:
21			/ /	:
22			/ /	:
23			/ /	:
24			/ /	:
25			/ /	:
26			/ /	:
27			/ /	:
28			/ /	:
29			/ /	:
30			/ /	:
31			/ /	:
32			/ /	:
33			/ /	:
34			/ /	:
35			/ /	:
36			/ /	:
37			/ /	:
38			/ /	:
39			/ /	:
40			/ /	:

PHENOLS NARRATIVE

Lab Name: Contract:
Lab Code: Case No.: Batch No.:
SAS No.:

EPA SAMPLE NO.

PESTICIDES ANALYSIS DATA SHEET

Lab Name: Contract:
Lab Code: Case No.: Batch No.: Sequence No.:
SAS No.:
Instrument ID: Lab Sample ID:
Matrix: Date Received: / /
Sample wt./volume/other: Time Received: :
Dilution Factor: Date Analyzed: / /
Units: Wet-Weight Time Analyzed: :
Quantitation Type: Additional Cleanup (Y/N):
Extraction Type:

COMPOUND	ANALYTE CONCENTRATION	Q	RRT	IC $\overline{RRT}$	RT	IC $\overline{RT}$
alpha-BHC						
beta-BHC						
gamma-BHC (lindane)						
delta-BHC						
heptachlor						
aldrin						
heptachlor epoxide						
gamma-chlordane						
endosulfan I						
alpha-chlordane						
4,4'-DDE/dieldrin						
endrin						
endosulfan II						
4,4'-DDD						
endrin aldehyde						
endosulfan sulfate						
4,4'-DDT						
endrin ketone						
methoxychlor						

SYSTEM MONITOR COMPOUND

System Monitor Compound (QC Limits)	AMOUNT	%REC (50-150)	SMC AREA	RT	IC $\overline{RT}$	RT %D (+/- 1%)
decachlorobiphenyl						

* Value outside of QC limits.
U Compound analyzed for but not detected. Value represents the Contract Required Quantitation Limit (CRQL) for the specified analyte. (Note: CRQLs must be corrected for dilutions.)

PESTICIDES LABORATORY CONTROL SAMPLE DATA SHEET

Lab Name: Contract:
Lab Code: Case No.: Batch No.: Sequence No.:
SAS No.:
EPA Sample No.: Instrument ID:
Lab Sample ID: Date Analyzed: / /
Matrix: Time Analyzed: :
Extraction Type:

COMPOUND	AMOUNT ADDED (ng)	AMOUNT OBSERVED (ng)	%REC
alpha-BHC			
beta-BHC			
gamma-BHC (lindane)			
delta-BHC			
heptachlor			
aldrin			
heptachlor epoxide			
gamma-chlordane			
endosulfan I			
alpha-chlordane			
4,4'-DDE/dieldrin			
endrin			
endosulfan II			
4,4'-DDD			
endrin aldehyde			
endosulfan sulfate			
4,4'-DDT			
endrin ketone			
methoxychlor			

SYSTEM MONITOR COMPOUND

System Monitor Compound (QC Limits)	AMOUNT	%REC (50-150)	SMC AREA	RT	IC $\overline{RT}$	RT %D (+/- 1%)
decachlorobiphenyl						

* Value outside of QC limits.

PESTICIDES PERFORMANCE VERIFICATION STANDARD DATA SHEET

Lab Name: Contract:
Lab Code: Case No.: Batch No.: Sequence No.:
SAS No.:
EPA Sample No.: Instrument ID:
Lab Sample ID: Date Analyzed: / /
Time Analyzed: :

COMPOUND	AMOUNT ADDED (ng)	AMOUNT OBSERVED (ng)	%REC	RESOL. %VALLEY
alpha-BHC				
beta-BHC				
gamma-BHC (lindane)				
delta-BHC				
heptachlor				
aldrin				
heptachlor epoxide				
gamma-chlordane				
endosulfan I				
alpha-chlordane				
4,4'-DDE/dieldrin				
endrin				
endosulfan II				
4,4'-DDD				
endrin aldehyde				
endosulfan sulfate				
4,4'-DDT				
endrin ketone				
methoxychlor				

SYSTEM MONITOR COMPOUND

System Monitor Compound (QC Limits)	AMOUNT	%REC (50-150)	SMC AREA	RT	IC $\overline{RT}$	RT %D (+/- 1%)
decachlorobiphenyl						

* Value outside of QC limits.

PESTICIDES INITIAL CALIBRATION SHEET

Lab Name: Contract:
Lab Code: Case No.: Batch No.: Sequence No.:

Instrument ID:
SAS No.:

	EPA SAMPLE NO.	LAB SAMPLE ID	DATE	TIME	STANDARD CONC
CAL #1					
CAL #2					
CAL #3					

COMPOUND	CF LOW	CF MID	CF HIGH	$\overline{CF}$	%RSD	RESOL. %VALLEY
alpha-BHC						
beta-BHC						
gamma-BHC (lindane)						
delta-BHC						
heptachlor						
aldrin						
heptachlor epoxide						
gamma-chlordane						
endosulfan I						
alpha-chlordane						
4,4'-DDE/dieldrin						
endrin						
endosulfan II						
4,4'-DDD						
endrin aldehyde						
endosulfan sulfate						
4,4'-DDT						
endrin ketone						
methoxychlor						
decachlorobiphenyl						

* Value outside of QC limits

PESTICIDES INITIAL CALIBRATION SHEET

Lab Name: Contract:
Lab Code: Case No.: Batch No.: Sequence No.:

Instrument ID: SAS No.:

COMPOUND	RETENTION TIME (RT) L	M	H	MEAN
alpha-BHC				
beta-BHC				
gamma-BHC (lindane)				
delta-BHC				
heptachlor				
aldrin				
heptachlor epoxide				
gamma-chlordane				
endosulfan I				
alpha-chlordane				
4,4'-DDE/dieldrin				
endrin				
endosulfan II				
4,4'-DDD				
endrin aldehyde				
endosulfan sulfate				
4,4'-DDT				
endrin ketone				
methoxychlor				
decachlorobiphenyl				

COMPOUND	RELATIVE RETENTION TIME (RRT) L	M	H	MEAN
alpha-BHC				
beta-BHC				
gamma-BHC (lindane)				
delta-BHC				
heptachlor				
aldrin				
heptachlor epoxide				
gamma-chlordane				
endosulfan I				
alpha-chlordane				
4,4'-DDE/dieldrin				
endrin				
endosulfan II				
4,4'-DDD				
endrin aldehyde				
endosulfan sulfate				
4,4'-DDT				
endrin ketone				
methoxychlor				
decachlorobiphenyl				

PESTICIDES CALIBRATION CHECK SHEET

Lab Name: Contract:
Lab Code: Case No.: Batch No.: Sequence No.:
SAS No.:
Instrument ID:
EPA Sample No.: Date Analyzed: / /
Lab Sample ID: Time Analyzed: :
Standard Concentration:

COMPOUND	INITIAL $\overline{CF}$	MID	%D	RESOL. %VALLEY
alpha-BHC				
beta-BHC				
gamma-BHC (lindane)				
delta-BHC				
heptachlor				
aldrin				
heptachlor epoxide				
gamma-chlordane				
endosulfan I				
alpha-chlordane				
4,4'-DDE/dieldrin				
endrin				
endosulfan II				
4,4'-DDD				
endrin aldehyde				
endosulfan sulfate				
4,4'-DDT				
endrin ketone				
methoxychlor				
decachlorobiphenyl				

SYSTEM MONITOR COMPOUND

System Monitor Compound (QC Limits)	SMC AREA	RT	IC $\overline{RT}$	RT %D (+/- 1%)
decachlorobiphenyl				

* Value outside of QC limits.

PESTICIDES ANALYTICAL SEQUENCE SUMMARY

Lab Name: Contract:
Lab Code: Case No.: Batch No.: Sequence No.:
SAS No.:
Instrument ID: Analytical Sequence Start Date: / /
Initial Calibration Date: / / Analytical Sequence Start Time: :
Analytical Sequence Stop Date: / /
Analytical Sequence Stop Time: :

	EPA SAMPLE NO.	LAB SAMPLE ID.	DATE ANALYZED	TIME ANALYZED
01			/ /	:
02			/ /	:
03			/ /	:
04			/ /	:
05			/ /	:
06			/ /	:
07			/ /	:
08			/ /	:
09			/ /	:
10			/ /	:
11			/ /	:
12			/ /	:
13			/ /	:
14			/ /	:
15			/ /	:
16			/ /	:
17			/ /	:
18			/ /	:
19			/ /	:
20			/ /	:
21			/ /	:
22			/ /	:
23			/ /	:
24			/ /	:
25			/ /	:
26			/ /	:
27			/ /	:
28			/ /	:
29			/ /	:
30			/ /	:
31			/ /	:
32			/ /	:
33			/ /	:
34			/ /	:
35			/ /	:
36			/ /	:
37			/ /	:
38			/ /	:
39			/ /	:
40			/ /	:

PESTICIDES NARRATIVE

Lab Name: Contract:
Lab Code: Case No.: Batch No.:
SAS No.:

EPA SAMPLE NO.

AROCLORS ANALYSIS DATA SHEET

Lab Name: Contract:
Lab Code: Case No.: Batch No.: Sequence No.:
SAS No.:
Instrument ID: Lab Sample ID:
Matrix: Date Received: / /
Sample wt./volume/other: Time Received: :
Dilution Factor: Date Analyzed: / /
Units: Wet-Weight Time Analyzed: :
Quantitation Type: Additional Cleanup (Y/N):
Extraction Type:

COMPOUND	ANALYTE CONCENTRATION	Q
toxaphene		
Aroclor-1016		
Aroclor-1221		
Aroclor-1232		
Aroclor-1242		
Aroclor-1248		
Aroclor-1254		
Aroclor-1260		

SYSTEM MONITOR COMPOUND

System Monitor Compound (QC Limits)	AMOUNT	%REC (50-150)	SMC AREA	RT	IC $\overline{RT}$	RT %D (+/- 1%)
decachlorobiphenyl						

* Value outside of QC limits.
U Compound analyzed for but not detected. Value represents the Contract Required Quantitation Limit (CRQL) for the specified analyte. (Note: CRQLs must be corrected for dilutions.)

EPA SAMPLE NO.

AROCLORS ANALYSIS DATA SHEET

Lab Name: Contract:
Lab Code: Case No.: Batch No.: Sequence No.:
SAS No.:
Instrument ID: Lab Sample ID:
Matrix: Date Analyzed: / /
Quantitation Type: Time Analyzed: :

COMPOUND	PEAK	RRT	IC RRT	RT	IC RT
Aroclor-1016	1				
	2				
	3				
	4				
	5				
Aroclor-1260	1				
	2				
	3				
	4				
	5				
toxaphene	1				
	2				
	3				
	4				
Aroclor-1221	1				
	2				
	3				
Aroclor-1232	1				
	2				
	3				
	4				
Aroclor-1242	1				
	2				
	3				
	4				
	5				
Aroclor-1248	1				
	2				
	3				
	4				
	5				
Aroclor-1254	1				
	2				
	3				
	4				
	5				

AROCLORS LABORATORY CONTROL SAMPLE DATA SHEET

Lab Name: Contract:
Lab Code: Case No.: Batch No.: Sequence No.:
SAS No.:
EPA Sample No.: Instrument ID:
Lab Sample ID: Date Analyzed: / /
Matrix: Time Analyzed: :
Extraction Type:

COMPOUND	AMOUNT ADDED (ng)	AMOUNT OBSERVED (ng)	%REC
toxaphene			
Aroclor-1016			
Aroclor-1221			
Aroclor-1232			
Aroclor-1242			
Aroclor-1248			
Aroclor-1254			
Aroclor-1260			

SYSTEM MONITOR COMPOUND

System Monitor Compound (QC Limits)	AMOUNT	%REC (50-150)	SMC AREA	RT	IC $\overline{RT}$	RT %D (+/- 1%)
decachlorobiphenyl						

* Value outside of QC limits.

AROCLORS PERFORMANCE VERIFICATION STANDARD DATA SHEET

Lab Name: Contract:
Lab Code: Case No.: Batch No.: Sequence No.:

SAS No.:
EPA Sample No.: Instrument ID:
Lab Sample ID: Date Analyzed: / /
Time Analyzed: :

COMPOUND	AMOUNT ADDED (ng)	AMOUNT OBSERVED (ng)	%REC	RESOL. %VALLEY
Aroclor-1016				
Aroclor-1260				

SYSTEM MONITOR COMPOUND

System Monitor Compound (QC Limits)	AMOUNT	%REC (50-150)	SMC AREA	RT	IC $\overline{RT}$	RT %D (+/- 1%)
decachlorobiphenyl						

* Value outside of QC limits.

AROCLORS INITIAL CALIBRATION SHEET

Lab Name: Contract:
Lab Code: Case No.: Batch No.: Sequence No.:
SAS No.: Instrument ID:

	EPA SAMPLE NO.	LAB SAMPLE ID	DATE	TIME	STD. CONC.
CAL #1					
CAL #2					
CAL #3					
toxaphene					
1221					
1232					
1242					
1248					
1254					

AROCLOR	PEAK	CF LOW	CF MID	CF HIGH	MEAN CF	%RSD
Aroclor-1016	1					
	2					
	3					
	4					
	5					
Aroclor-1260	1					
	2					
	3					
	4					
	5					
decachlorobiphenyl	1					
toxaphene	1					
	2					
	3					
	4					
Aroclor-1221	1					
	2					
	3					
Aroclor-1232	1					
	2					
	3					
	4					
Aroclor-1242	1					
	2					
	3					
	4					
	5					
Aroclor-1248	1					
	2					
	3					
	4					
	5					
Aroclor-1254	1					
	2					
	3					
	4					
	5					

* Value outside of QC limits.

AROCLORS INITIAL CALIBRATION SHEET

Lab Name: Contract:
Lab Code: Case No.: Batch No.: Sequence No.:
SAS No.: Instrument ID:

COMPOUND	PEAK	RT LOW	RRT LOW
Aroclor-1016	1		
	2		
	3		
	4		
	5		
Aroclor-1260	1		
	2		
	3		
	4		
	5		
toxaphene	1		
	2		
	3		
	4		
Aroclor-1221	1		
	2		
	3		
Aroclor-1232	1		
	2		
	3		
	4		
Aroclor-1242	1		
	2		
	3		
	4		
	5		
Aroclor-1248	1		
	2		
	3		
	4		
	5		
Aroclor-1254	1		
	2		
	3		
	4		
	5		

System Monitor Compound Decachlorobiphenyl	L	M	H	MEAN
Retention Time				

AROCLORS CALIBRATION CHECK SHEET

Lab Name: Contract:
Lab Code: Case No.: Batch No.: Sequence No.:
SAS No.:
Instrument ID:
EPA Sample No.: Date Analyzed: / /
Lab Sample ID: Time Analyzed: :
Standard Concentration:

COMPOUND	PEAK	INITIAL $\overline{CF}$	MID	%D	RESOL. %VALLEY
Aroclor-1016	1				
	2				
	3				
	4				
	5				
Aroclor-1260	1				
	2				
	3				
	4				
	5				
decachlorobiphenyl	1				

SYSTEM MONITOR COMPOUND

System Monitor Compound (QC Limits)	SMC AREA	RT	IC $\overline{RT}$	RT %D (+/- 1%)
decachlorobiphenyl				

* Value outside of QC limits.

AROCLORS ANALYTICAL SEQUENCE SUMMARY

Lab Name: Contract:
Lab Code: Case No.: Batch No.: Sequence No.:
SAS No.:
Instrument ID: Analytical Sequence Start Date: / /
Initial Calibration Date: / / Analytical Sequence Start Time: :
Analytical Sequence Stop Date: / /
Analytical Sequence Stop Time: :

	EPA SAMPLE NO.	LAB SAMPLE ID.	DATE ANALYZED	TIME ANALYZED
01			/ /	:
02			/ /	:
03			/ /	:
04			/ /	:
05			/ /	:
06			/ /	:
07			/ /	:
08			/ /	:
09			/ /	:
10			/ /	:
11			/ /	:
12			/ /	:
13			/ /	:
14			/ /	:
15			/ /	:
16			/ /	:
17			/ /	:
18			/ /	:
19			/ /	:
20			/ /	:
21			/ /	:
22			/ /	:
23			/ /	:
24			/ /	:
25			/ /	:
26			/ /	:
27			/ /	:
28			/ /	:
29			/ /	:
30			/ /	:
31			/ /	:
32			/ /	:
33			/ /	:
34			/ /	:
35			/ /	:
36			/ /	:
37			/ /	:
38			/ /	:
39			/ /	:
40			/ /	:

AROCLORS NARRATIVE

Lab Name: Contract:
Lab Code: Case No.: Batch No.:
SAS No.:

SECTION V

ON-LINE DATA TRANSFER SYSTEM AND CONTRACTOR ADP REQUIREMENTS

LABORATORY QTM SOFTWARE AND ELECTRONIC DATA RESPONSIBILITIES

1 QTM Process Overview

QTM involves the delivery of analytical results to the site 48 hours after the laboratory receives the samples. In order to achieve this goal, traditional field analysis methods were revised and linked to software products to speed up the analysis, quality assurance, data transmission, and reporting processes.

The laboratory is responsible for assembling the data package, ensuring that the data meets minimum quality assurance standards, and delivering the data to the EPA mainframe for distribution to the designated user community. The laboratory process, presented as a flow chart in Figure 1, is described as follows. The laboratory reports the required analytical results into the QTM laboratory software. After data has been loaded into the system, either through data entry or importing an exhibit H format file, it must be processed through the Contract Compliance Screeening (CCS) software. The first part of CCS assesses the data for structural defects. These defects must be corrected before the remaining quality assurance checks can proceed. Once the laboratory has corrected all the structural defects, the data is resubmitted through CCS again. Once CCS is completed, the laboratory will receive a CCS defect report. The laboratory must correct all correctable CCS defects reported. The CCS defect identification and correction process continues until no correctable defect statements appear. Once the data passes through CCS, the results are submitted to the mainframe.

QTM data recipients (Regions, EMSL-LV, Headquarters, and the CLASS contractor) will use a QTM Regional software product to receive the results and generate reports. For QTM purposes, the EPA mainframe is analogous to a post office. QTM users will dial the mainframe and download data packages of interest. Since the user is dialing the mainframe, users can retrieve information from any location as long as they have access to a phone line. The impact of this design is that now individuals at the site can obtain results within the 48 hour time period as well as the people at the Regional offices. In addition to downloading data, the QTM Regional software produces reports. The analysis recipient will obtain not only the analytical data package, but automated data review results generated by QTM CADRE, CCS screening results, and other information that may be helpful to their decision making. Figure 2 summarizes the QTM electronic data transfer process.

As soon as the data package arrives on the mainframe, the CLASS contractor processes the data package through the CLASS contractor's version of CCS and compares it to the CCS results received from the laboratory (Note: the CLASS contractor CCS version is the same as the laboratory version). If differences are found, the CLASS contractor may contact the laboratory to assist in reconciling the information.

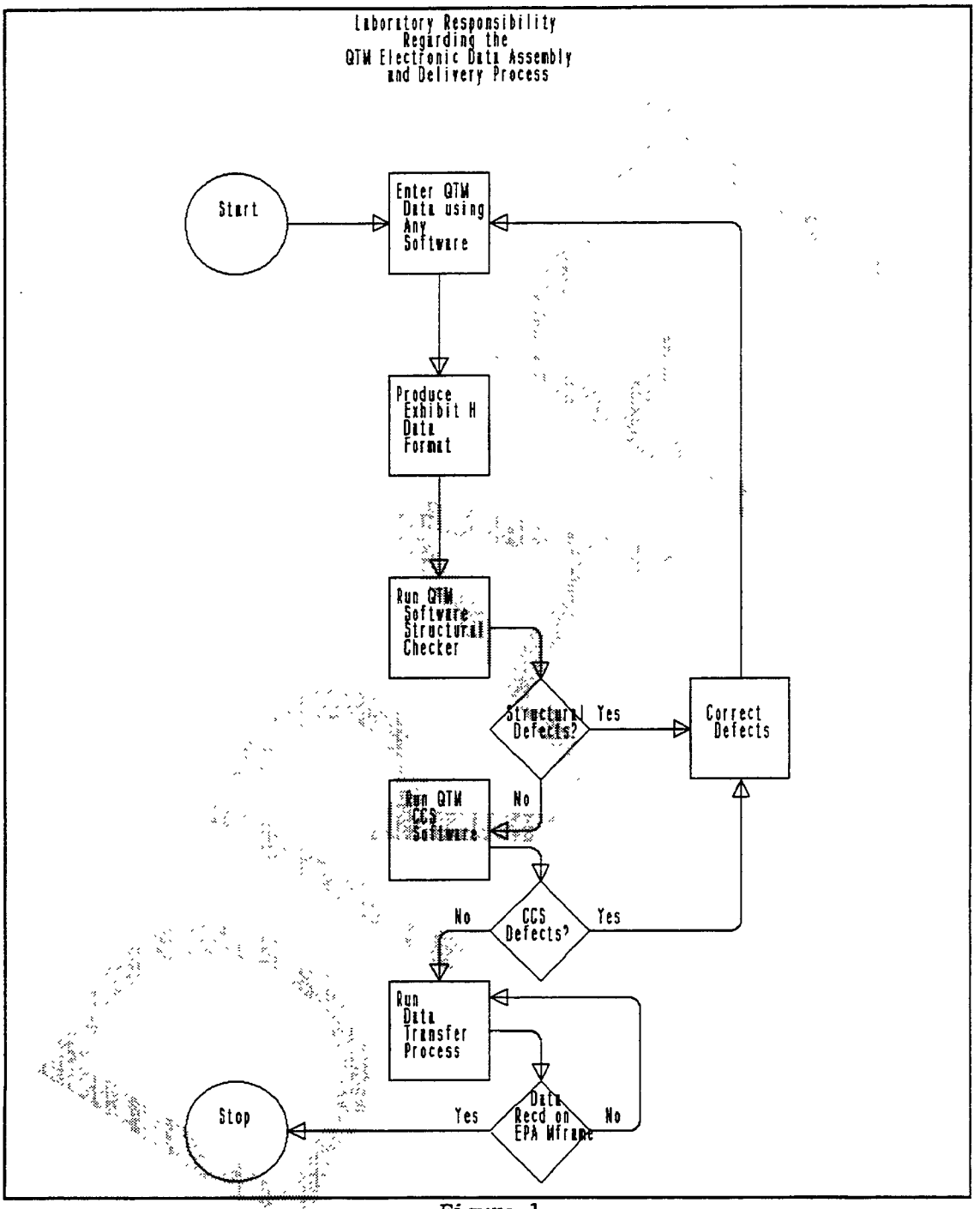
Laboratory Responsibility
Regarding the
QTM Electronic Data Assembly
and Delivery Process
Start
Enter QTM Data using Any Software
Produce Exhibit H Data Format
Run QTM Software Structural Checker
Structural Defects?
Yes
Correct Defects
No
Run QTM CCS Software
CCS Defects?
No
Yes
Run Data Transfer Process
Data Recd on EPA Mframe
Yes
No
Stop

Figure 1

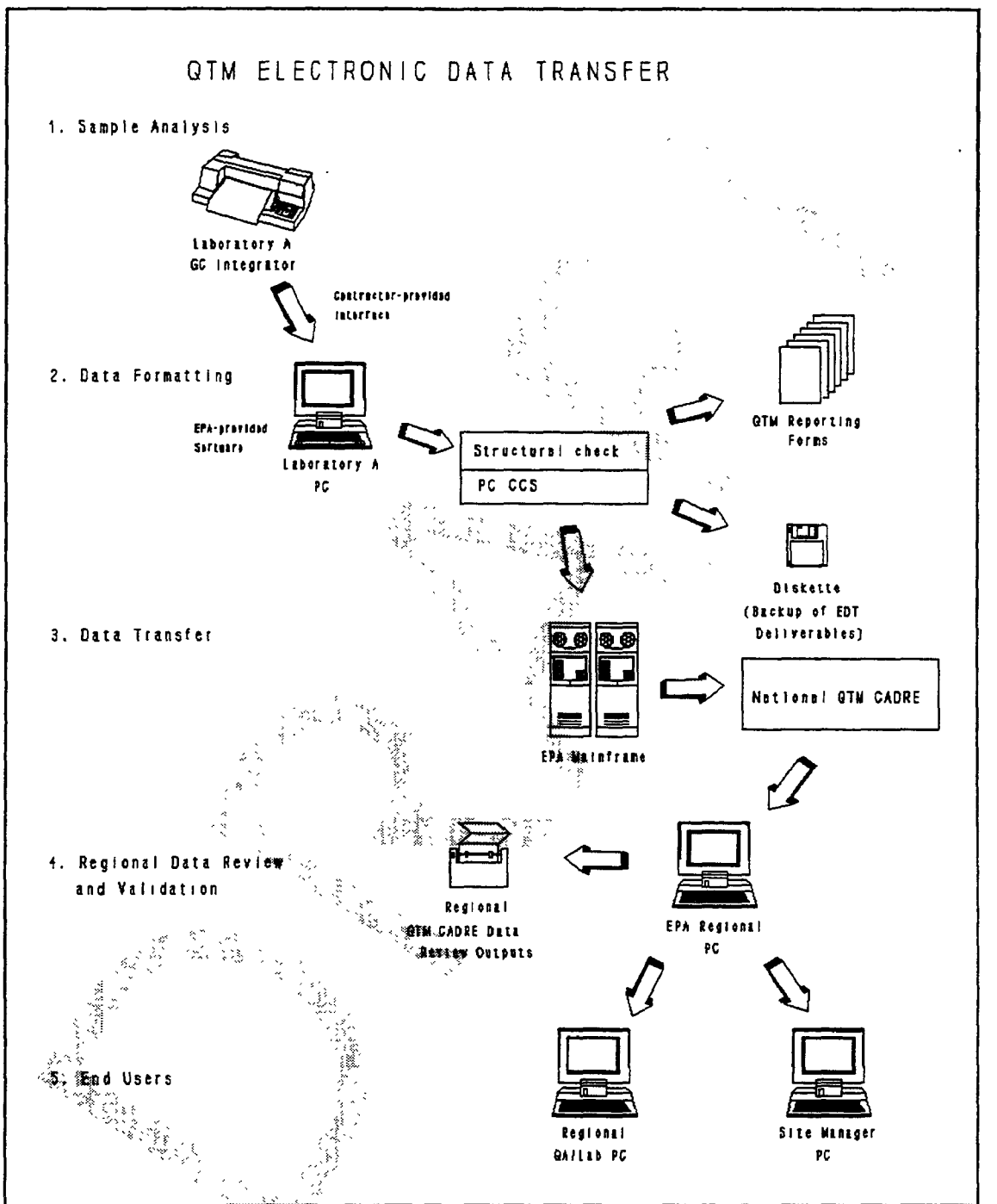
QTM ELECTRONIC DATA TRANSFER
1. Sample Analysis
Laboratory A
GC Integrator
Contractor-provided
Interface
2. Data Formatting
EPA-provided
Software
Laboratory A
PC
Structural check
PC CCS
QTM Reporting
Forms
Diskette
(Backup of EDT
Deliverables)
3. Data Transfer
EPA Mainframe
National QTM CADRE
4. Regional Data Review
and Validation
Regional
QTM CADRE Data
Review Outputs
EPA Regional
PC
5. End Users
Regional
QA/Lab PC
Site Manager
PC

Figure 2

2 General Responsibilities

The Contractor will support the QTM Software and Electronic Data in the following manner:

2.1 Personnel

The Contractor will provide personnel to support the automated portion of the analytical service described in this SOW. Individuals will meet the minimum qualifications described below.

2.2 Computer Hardware and Software

The Contractor will provide computer hardware and software to support the automated portion of the analytical service described in this SOW. The computer hardware and software will meet the minimum requirements described below.

2.3 Data Processing

The Contractor will provide data processing support for the automated portion of the analytical service described in this SOW. The area of data processing responsibilities includes, but is not limited to: hardware, software, system security, and electronic data package assembly and delivery. The data processing responsibilities will meet the minimum requirements described below.

2.4 Electronic Data Storage and Retrieval

The Contractor will provide electronic data storage and retrieval support for the automated portion of the analytical service described in this SOW. The data storage and retrieval responsibilities will meet the minimum requirements described below.

2.5 Documentation

The Contractor will produce documentation for all standard operating procedures (SOPs) used in fulfilling the automated portion of the analytical service described in this SOW. The documentation responsibilities will meet the minimum requirements described below.

3 Staffing and Equipment

The following are the minimum functional requirements.

3.1 Personnel

The minimum functional requirements necessary to meet the terms and conditions of this contract are listed below and described in IFB

Attachment C. The Contractor shall designate and utilize key personnel to perform these functions. EPA reserves the right to review personnel qualifications and experience, and take contract action as appropriate. The minimal functional requirements are listed below and described in detail in Exhibit A:

3.1.1 Systems Manager;

3.1.2 Programmer Analyst; and

3.1.3 Back-Up Programmer Analyst (recommended, see Exhibit A, Section IV, paragraph 1.2.4).

3.2 Equipment and Software

The Contractor shall provide analytical and computer equipment and technical expertise for this contract. The software and equipment necessary to meet the terms and conditions of this contract are listed below and described in IFB Attachment C. The Contractor shall designate and utilize key personnel to use this equipment to perform the functions of this SOW. The minimal requirements are listed below and described in detail in Exhibit A:

3.2.1 The Contractor shall have at minimum the following computer equipment hardware configuration:

- IBM AT/PS2 80386-compatible personal computer (PC);
- 640K Random Access Memory (RAM);
- 15 Megabytes of dedicated free space on the hard disk;
- 2 Megabytes of expanded memory; and
- a 9600 baud Hayes compatible modem which is compatible with the EPA Telecommunications Network.

The above specifications are minimum requirements for operating the QTM software. It is recommended that the Contractor use higher end equipment to decrease the QTM software processing time. The anticipated impact of operating on enhanced configurations is described in further detail in paragraph 7 - Optimizing the QTM Software.

3.2.2 The Contractor shall have at minimum the following computer software configuration:

- QTM Laboratory Software, to be provided by EPA;

- Base SAS Software*;

- DOS Version 3.X or 5.X or higher; and
  Note: Running the QTM Software under DOS 4.X is not recommended.

- PC Anywhere*.

  * These software packages are available at local retail software outlets.

Refer to the QTM Laboratory Software Users Manual for more specific installation requirements. The above specifications are minimum requirements for operating the QTM software. It is recommended that the Contractor use any additional software products that would assist in the fulfillment of the terms of this contract. The Contractor may purchase commercial products, develop products in-house or commission a vendor to develop software products to assist in the mission of the contract.

3.2.3 To receive improved performance of the QTM Software, it is recommended that the Contractor purchase disk caching software. The anticipated impact of operating on enhanced configurations is described in further detail in paragraph 7 - Optimizing the QTM Software.

4 Data Processing

The Contractor is responsible for the following:

4.1 Hardware

4.1.1 Installing, maintaining, updating, operating, and managing the computer equipment and troubleshooting the hardware and software.

4.1.2 Providing first line support for any problems encountered.

4.1.3 Identifying, tracking and correcting any problems encountered. In the event of data transfer system failure, the Contractor shall send a hardcopy of the sample and QC data summary (Form QI - QVII) to the Region-RSCC and to the Region-client by overnight delivery. The Contractor shall also send a diskette of the sample and QC summary data, in EPA-approved format, to the CLASS contractor by overnight delivery. The Contractor shall immediately contact the CLASS contractor and the Regional client or RSCC if the data transfer system or the data formatting and forms generating software fails.

4.1.4 Ensuring that the hardware systems are configured to be compatible with the QTM software system.

4.1.5 Identifying areas of process or product improvement and providing suggestions to EPA.

4.1.6 Ensuring that the systems are operational at all times.

4.2 Software

4.2.1 Installing, maintaining, updating, operating, and managing the computer systems.

4.2.2 Providing first line support for any problems encountered.

4.2.3 Assisting in tracking and correcting any problems encountered (refer to Exhibits A and B for more detailed information).

4.2.4 Identifying areas of process or product improvement and providing suggestions to EPA.

4.2.5 Ensuring that the system software is configured to be compatible with the QTM software system.

4.2.6 Ensuring that the systems are operational at all times.

4.3 System Security

4.3.1 Ensuring that only authorized personnel have access to systems.

4.3.2 Initiating and maintaining EPA mainframe identifications according to EPA Telecommunications Security Procedures.

4.4 Electronic Data Package Assembly and Delivery Process

4.4.1 Preparing electronic data package in accordance with specifications in Exhibit H and B.
Note: The QTM Software data entry module can be used but is not required

4.4.2 Processing electronic data package using the QTM Software.

4.4.3 Correcting any identified defects resulting from the QTM Software evaluation.

4.4.4 Providing quality assurance/control (QA/QC) measures prior to submitting the electronic data package through the QTM Software for electronic delivery.

4.4.4.1 The electronic data package must match the hardcopy data package.

4.4.4.2 The electronic data package must meet all requirements specified in the SOW.

4.4.5 Submitting the QA'd electronic data package which has been processed through the QTM Software to the EPA mainframe within the required time period (see Exhibits A & B).

4.4.6 Ensuring that the processes are operational at all times.

5 Data Storage and Retrieval

The Contractor is responsible for storing backups of all electronic deliverables. The Contractor will develop a procedure for tracking historical information which occurred during the assembly, processing, and transfer procedures of each electronic deliverable. A procedure will be developed for archiving, retrieving and reproducing each deliverable upon request. Refer to Exhibits B and F for more detailed information.

5.1 Storing the electronic data package as the official back-up and for future reference and/or submission, if needed.

5.2 Retrieving any previous electronic data packages and submitting them to EPA upon request.

6 Document Standard Operating Procedures

The Contractor shall submit updated copies of all required Standard Operating Procedures as described in Exhibits E and F.

7 Optimizing the QTM Software

This section provides suggestions for optimizing the QTM software operating environment. Following these suggestions will help to minimize the time required for data upload, download, and processing.

7.1 Hardware

- Using a faster computer processor such as an 80386 or 80486 with a clock speed of 25-33 MHz or higher will reduce processing time substantially. The following compares the performance of the 8088, 80386, and the 80486 processors.

Processor/Clock Speed Benchmarks

Computer	PC-XT	386SX	486
Running Time	32 min.	6.5 min.	4 min.
Bios	IBM	AWARD	AMI
Processor (Intel)	8088	80386SX	80486
Clock Speed	5.7 Mhz	16 Mhz	33 Mhz
Math Coprocessor	None	Present	Present
RAM	640	640	640
Expanded Memory	0	1316K	3832K
Monitor	Mono	VGA	VGA
DOS Version	3.3	5.0	5.0
Hard Disk	32 Meg	80 Meg	106 Meg

Note: These benchmarks were obtained by performing the "submit results" option in version 0.14 of the QTM laboratory software.

- Increasing the EXTENDED or EXPANDED RAM memory will allow the use of disk caching software which reduces the time it takes to read data from the hard disk. The following compares running the QTM software with different size disk caches.

Disk Caching Benchmarks

Amount of Disk Cached	Processing Time
0K	9:35 min.
720K	5:45 min.
1024K	5:00 min.

Note: These benchmarks were obtained by running the Criteria/Outlier report in version 0.14 of the QTM Regional software. The computer equipment used was a 386X, operating at 16 Mhz, with 1024K extended memory.

- Installing the QTM software on local hard disk rather than using a LAN will reduce the time it takes to read data, making substantial difference in the processing time.

- Using high speed modems or communications networks with dedicated data lines will decrease downloading time by at least 10-15 minutes depending on the file size, see below.

Transmission of Speed Benchmarks

Transmission Speed	Transmission Time
56 K dedicated line	2:40 min.
2400 Baud	20:08 min.
1200 Baud	21:40 min.

Note: These benchmarks were obtained by running the Receive option in version 0.14 of the QTM Regional software. The computer equipment used was a 386SX, operating at 16 Mhz, with 1024K extended memory. The size of the file used in transmission was 114802 bytes.

7.2 Software

- Using DOS version 5.0 or higher, makes use of high memory, leaving more conventional memory for the program.

- Installing a disk caching program to utilize extended or expanded memory will reduce the amount of time the computer spends reading data from the hard disk.

- Performing regular maintenance on the hard disk using disk optimization utility software to perform disk compression will remove deleted files, rewrite fragmented files, and reorganize your disk. Optimizing your disk will reduce the time it takes to read data from the hard disk.

- Setting up the CONFIG.SYS file for loading DOS in the upper memory (DOS version 5.X only) will free more space in conventional memory for use by the programs. The config.sys file should contain the following line: DOS=HIGH,UMB.

EXHIBIT C

QTM TARGET COMPOUND LIST (QTCL) AND CONTRACT REQUIRED QUANTITATION LIMITS (CRQL)

QTM Target Compound List (QTCL) and
Contract Required Quantitation Limits (CRQL)[1]

	Volatiles	CAS Number	Quantitation Limits Water µg/L	Soil/Solid[2] µg/kg	Oil[3] µg/kg	Oil[4] µg/kg	Oil[5] µg/L
1.	Bromoform	75-25-2	20	40	400	800	400
2.	Bromodichloromethane	75-27-4	20	40	400	800	400
3.	Benzene	71-43-2	20	40	400	800	400
4.	Carbon Tetrachloride	56-23-5	20	40	400	800	400
5.	Chlorobenzene	108-90-7	20	40	400	800	400
6.	Chloroform	67-66-3	20	40	400	800	400
7.	1,1-Dichloroethane	75-34-3	20	40	400	800	400
8.	1,2-Dichloroethane	107-06-2	20	40	400	800	400
9.	1,1-Dichloroethene	75-35-4	20	40	400	800	400
10.	cis-1,2-Dichloroethene	156-59-2	20	40	400	800	400
11.	trans-1,2-Dichloroethene	156-60-5	20	40	400	800	400
12.	Ethylbenzene	100-41-4	20	40	400	800	400
13.	1,1,2,2-Tetrachloroethane	79-34-5	20	40	400	800	400
14.	Tetrachloroethene	127-18-4	20	40	400	800	400
15.	Toluene	108-88-3	20	40	400	800	400
16.	1,1,1-Trichloroethane	71-55-6	20	40	400	800	400
17.	Trichloroethene	79-01-6	20	40	400	800	400
18.	Vinyl Chloride	75-01-4	20	40	400	800	400
19.	ortho-Xylene	95-47-6	20	40	400	800	400
20.	meta-Xylene	108-38-3	20	40	400	800	400
21.	para-Xylene	106-42-3	20	40	400	800	400

1 Specific quantitation limits are highly matrix dependent. The quantitation limits listed herein are provided for guidance and may not always be achievable.

2 Quantitation limits listed for soil/solid are based on wet weight.

3 Quantitation limits listed are for methanol non-miscible oil samples and are based on optimum sample size.

4 Quantitation limits listed are for methanol miscible/aqueous non-miscible oil samples and are based on optimum sample size.

5 Quantitation limits listed are for methanol miscible/aqueous miscible oil samples. Based on optimum sample size.

QTM Target Compound List (QTCL) and
Contract Required Quantitation Limits (CRQL)[1]
(Cont'd.)

Polynuclear Aromatic Hydrocarbons (PAHs)		CAS Number	Quantitation Limits Water µg/L	Soil/Solid[2] µg/kg	Oil[3] µg/kg
22.	Acenaphthene	83-32-9	20	330	20,000
23.	Acenaphthylene	208-96-8	20	330	20,000
24.	Anthracene	120-12-7	20	330	20,000
25.	Benz [a] Anthracene	56-55-3	20	330	20,000
26.	Benzo [a] Pyrene	50-32-8	20	330	20,000
27.	Benzo [b] Fluoranthene	205-99-2	20	330	20,000
28.	Benzo [k] Fluoranthene	207-08-9	20	330	20,000
29.	Benzo [g,h,i] Perylene	191-24-2	20	330	20,000
30.	Chrysene	218-01-9	20	330	20,000
31.	Dibenz [a,h] Anthracene	53-70-3	20	330	20,000
32.	Fluoranthene	206-44-0	20	330	20,000
33.	Fluorene	86-73-7	20	330	20,000
34.	Indeno [1,2,3-cd] Pyrene	193-39-5	20	330	20,000
35.	Naphthalene	91-20-3	20	330	20,000
36.	Phenanthrene	85-01-8	20	330	20,000
37.	Pyrene	129-00-0	20	330	20,000

1 Specific quantitation limits are highly matrix dependent. The quantitation limits listed herein are provided for guidance and may not always be achievable.

2 Quantitation limits listed for soil/solid are based on wet weight. Quantitation limits listed for soil/solid are based on sample preparation utilizing solvent extraction (see Exhibit D Section IV).

3 Based on optimum sample size.

QTM Target Compound List (QTCL) and
Contract Required Quantitation Limits (CRQL)[1]
(Cont'd.)

	Phenols	CAS Number	Quantitation Limits Water µg/L	Soil/Solid[2] µg/kg	Oil[3] µg/kg
38.	2-Chlorophenol	95-57-8	50	830	830
39.	4-Chloro-3-Methylphenol	59-50-7	50	830	830
40.	2,4-Dichlorophenol	120-83-2	50	830	830
41.	2,4-Dimethylphenol	105-67-9	50	830	830
42.	4,6-Dinitro-2-Methylphenol	534-52-1	50	830	830
43.	2,4-Dinitrophenol	51-28-5	50	830	830
44.	o-Cresol	95-48-7	50	830	830
45	m-Cresol	108-39-4	50	830	830
46.	p-Cresol	106-44-5	50	830	830
47.	2-Nitrophenol	88-75-5	50	830	830
48.	4-Nitrophenol	100-02-7	50	830	830
49.	Pentachlorophenol	87-86-5	50	830	830
50.	Phenol	108-95-2	50	830	830
51.	2,3,4,6-Tetrachlorophenol	58-90-2	50	830	830
52.	2,4,5-Trichlorophenol	95-95-4	50	830	830
53.	2,4,6-Trichlorophenol	88-06-2	50	830	830

1 Specific quantitation limits are highly matrix dependent. The quantitation limits listed herein are provided for guidance and may not always be achievable.

2 Quantitation limits listed for soil/solid are based on wet weight. Quantitation limits listed for soil/solid are based on sample preparation utilizing solvent extraction (see Exhibit D Section IV).

3 Based on optimum sample size.

QTM Target Compound List (QTCL) and
Contract Required Quantitation Limits (CRQL)[1]
(Cont'd.)

	Pesticides	CAS Number	Quantitation Limits Water µg/L	Soil/Solid[2] µg/kg	Oil[3] µg/kg
54.	Aldrin	309-00-2	0.1	1.7	100
55.	alpha-BHC	319-84-6	0.1	1.7	100
56.	beta-BHC	319-85-7	0.1	1.7	100
57.	alpha-Chlordane	5103-71-9	0.1	1.7	100
58.	gamma-Chlordane	5103-74-2	0.1	1.7	100
59.	delta-BHC	319-86-8	0.1	1.7	100
60.	Dieldrin	60-57-1	0.1	1.7	100
61.	4,4'-DDD	72-54-8	0.1	1.7	100
62.	4,4'-DDE	72-55-9	0.1	1.7	100
63.	4,4'-DDT	50-29-3	0.1	1.7	100
64.	Endosulfan Sulfate	1031-07-8	0.1	1.7	100
65.	Endosulfan I	959-98-8	0.1	1.7	100
66.	Endosulfan II	33213-65-9	0.1	1.7	100
67.	Endrin	72-20-8	0.1	1.7	100
68.	Endrin Ketone	53494-70-5	0.1	1.7	100
69.	Endrin Aldehyde	7421-93-4	0.1	1.7	100
70.	gamma-BHC (Lindane)	58-89-9	0.1	1.7	100
71.	Heptachlor	76-44-8	0.1	1.7	100
72.	Heptachlor Epoxide	1024-57-3	0.1	1.7	100
73.	Methoxychlor	72-43-5	0.1	1.7	100

1 Specific quantitation limits are highly matrix dependent. The quantitation limits listed herein are provided for guidance and may not always be achievable.

2 Quantitation limits listed for soil/solid are based on wet weight. Quantitation limits listed for soil/solid are based on sample preparation utilizing solvent extraction (see Exhibit D Section IV).

3 Based on optimum sample size.

QTM Target Compound List (QTCL) and
Contract Required Quantitation Limits (CRQL)[1]
(Cont'd.)

	PCBs/Aroclors	CAS Number	Quantitation Limits Water µg/L	Soil/Solid[2] µg/kg	Oil[3] µg/kg
74.	Aroclor-1016	12674-11-2	1	17	1000
75.	Aroclor-1221	11104-28-2	2	33	2000
76.	Aroclor-1232	11141-16-5	1	17	1000
77.	Aroclor-1242	53469-21-9	1	17	1000
78.	Aroclor-1248	12672-29-6	1	17	1000
79.	Aroclor-1254	11097-69-1	1	17	1000
80.	Aroclor-1260	11096-82-5	1	17	1000
81.	Toxaphene	8001-35-2	5	83	5000

1 Specific quantitation limits are highly matrix dependent. The quantitation limits listed herein are provided for guidance and may not always be achievable.

2 Quantitation limits listed for soil/solid are based on wet weight. Quantitation limits listed for soil/solid are based on sample preparation utilizing solvent extraction (see Exhibit D Section IV).

3 Based on optimum sample size.

General Guidance for Calculating CRQLs for Other Matrices

In general, the CRQLs for other matrices for each fraction not specified in Exhibit B (e.g., tissue, wipes, etc.) may be calculated by multiplying the low concentration standard concentration by the final extract volume and dividing this result with the amount of sample extracted or for wipe samples the area sampled.

$$CRQL = \frac{\textit{low calibration standard } (\mu g/ml) \times \textit{final sample extract volume } (ml)}{\textit{amount of sample extracted or area or volume sampled (in L/kg/area)}}$$

DRAFT

TABLE OF CONTENTS

ANALYTICAL METHOD FOR VOLATILES

SECTION I Introduction
SECTION II Sample Storage and Turnaround Times and Equipment and Standards
SECTION III Instrument Quality Control Procedures and Requirements
SECTION IV Sample Analysis and Compound Identification and Quantitation
SECTION V Sample Quality Control Procedures and Requirements

ANALYTICAL METHOD FOR POLYNUCLEAR AROMATIC HYDROCARBONS (PAHs)

SECTION I Introduction
SECTION II Sample/Extract Storage and Turnaround Times and Equipment and Standards
SECTION III Instrument Quality Control Procedures and Requirements
SECTION IV Sample Analysis and Compound Identification and Quantitation
SECTION V Sample Quality Control Procedures and Requirements

ANALYTICAL METHOD FOR PHENOLS

SECTION I Introduction
SECTION II Sample/Extract Storage and Turnaround Times and Equipment and Standards
SECTION III Instrument Quality Control Procedures and Requirements
SECTION IV Sample Analysis and Compound Identification and Quantitation
SECTION V Sample Quality Control Procedures and Requirements

ANALYTICAL METHOD FOR PESTICIDES

SECTION I Introduction
SECTION II Sample/Extract Storage and Turnaround Times and Equipment and Standards
SECTION III Instrument Quality Control Procedures and Requirements
SECTION IV Sample Analysis and Compound Identification and Quantitation
SECTION V Sample Quality Control Procedures and Requirements

ANALYTICAL METHOD FOR PCBs AS AROCLORS

SECTION I Introduction
SECTION II Sample/Extract Storage and Turnaround Times and Equipment and Standards
SECTION III Instrument Quality Control Procedures and Requirements
SECTION IV Sample Analysis and Compound Identification and Quantitation
SECTION V Sample Quality Control Procedures and Requirements

APPENDICES

Appendix A Dry Weight Calculations
Appendix B General Guidance for Unusual or High Concentration Samples
Appendix C Modified Solid Phase Extraction Procedures for Pesticides and PCBs

EXHIBIT D

QUICK TURNAROUND METHODS

ANALYTICAL METHOD FOR VOLATILES (VOAs)

TABLE OF CONTENTS
VOLATILES

SECTION		Page
I	Introduction	D-3
II	Sample Storage and Turnaround Times and Equipment and Standards	D-4
1	Sample Storage and Turnaround Times	D-4
2	Summary of Method	D-4
3	Interferences	D-5
4	Apparatus and Materials	D-6
5	Reagents	D-7
6	Standards	D-8
III	Instrument Quality Control Procedures and Requirements	D-12
7	Instrument Operating Conditions	D-12
8	Calibration of the GC System - Initial Calibration	D-14
9	Calibration of the GC System - Calibration Check	D-19
10	Calibration of the GC System - PVS	D-22
11	System Performance - GC Resolution	D-25
IV	Sample Analysis and Compound Identification and Quantitation	D-28
12	Summary	D-28
13	Procedure	D-28
14	Instrumental Analysis	D-31
15	Dilutions	D-33
16	Identification of Target Compounds	D-35
17	Calculations	D-36
18	Technical Acceptance Criteria	D-38
19	Corrective Action	D-39
20	Documentation	D-40
V	Sample Quality Control Procedures and Requirements	D-41
21	Method Blank Analysis	D-41
22	Instrument Blank Analysis	D-44
23	Laboratory Control Samples	D-47

SECTION I

INTRODUCTION

This Quick Turnaround Method (QTM) is designed for use in determining the concentration of various volatile (VOA) organic compounds in water, soil/solid, and oil samples. Exhibit C lists the compounds that will be determined by this method along with the Contract Required Quantitation Limits (CRQLs). The method yields identification and quantitation of the analytes listed in Exhibit C using a single column, gas chromatographic/dual detector (photo-ionization and electrolytic conductivity) method (GC/PID, ELCD). Target compound concentrations in samples are reported on an "as-received" basis; no dry weights are calculated. The primary objective of this QTM is to provide analytical data in a timely manner for decision-making during site inspections, remediations, and emergency removal activities. The VOA QTM is to be used when rapid data turnaround is required, when the data requestor knows of (or strongly suspects) the presence of volatile contamination, and there is knowledge regarding potential matrix interferences at the site. The QTM is not equivalent to, nor a replacement for, the CLP Organics Multi-Media Multi-Concentration Analysis.

SECTION II

SAMPLE STORAGE AND TURNAROUND TIMES AND EQUIPMENT AND STANDARDS

1 Sample Storage and Turnaround Times

1.1 Procedures for Sample Storage

Samples shall be protected from light and refrigerated at 4°C (± 2°C) from the time of receipt until 60 days after delivery of a complete data package to the Agency.

Samples and standards must be stored separately.

1.2 Contract Required Sample Turnaround Times

Samples shall be analyzed and a summary of the analytical and QC data shall be reported to the appropriate EPA Region via telecommunications network within 48 hours (or 72 hours if more than three fractions are analyzed) of Validated Time of Sample Receipt (VTSR). See Exhibits A and B for specific instructions concerning sample turnaround time and data reporting requirements.

2 Summary of Method

2.1 This analytical method is a heated headspace method for the analysis of volatile organics in water, soil/solid, and oil samples. All samples shall be analyzed utilizing a heated headspace apparatus and gas chromatography (GC) with dual detectors. All analyses shall be performed within a contract specified analytical sequence that shall not exceed 24 hours.

2.2 Target compounds are identified and quantitated on the basis of retention time windows and calibration factors established during initial calibration. During initial calibration, a mean relative retention time ($\overline{RRT}$), a mean retention time ($\overline{RT}$), and an identification window (± 0.005 RRT unit of the mean RRT or ± 1.0 percent of the mean RT) are established for each compound. Mean calibration factors are also established during initial calibration and the percent relative standard deviation (%RSD) of the calibration factors for each target compound and the System Monitor Compound (SMC) must be less than or equal to 25.0 percent. Sample compound concentrations are calculated from the initial calibration using the average of the three calibration factors, using the mid point calibration factor (if it is within ± 10 percent of the average of the high and low calibration factors), or using line segments (K Curve).

2.3 A check of the initial calibration shall be performed no less than every 24 hours by the analysis of the mid point standard. All calibration factors calculated from this calibration check standard must be within ± 35.0 percent of the mean calibration factor calculated from the initial calibration for each target compound and the SMC.

2.4 An analytical sequence includes method blanks and instrument blanks in which no compound can be observed with a response greater than one-half the response in the corresponding RRT window of the initial calibration low concentration standard. The analytical sequence shall also include the analysis of Laboratory Control Samples (LCS) and Performance Verification Standards (PVS). The LCS will be a "go/no-go analysis". That is, if the LCS meets performance criteria as stated in paragraph 23, sample analyses may proceed. If, however, the LCS does not meet acceptance criteria, corrective action must be taken before sample analyses are performed. The PVS is two times the concentration of the low calibration standard and shall be analyzed at least once during each analytical sequence to verify instrument performance. All samples shall be bracketed by valid PVS analyses or a valid initial calibration or a valid calibration check standard and a valid PVS.

2.5 A System Monitor Compound (SMC) shall be added to all field and QC samples and standards. The SMC is used as a retention time marker to calculate RRTs for the identification of target compounds and to assess the effectiveness of the heated headspace sampler. When the recovery of the SMC in a field sample is less than 10 percent, greater than 200 percent, or peak interferences are present, absolute retention times are used for target compound identification. The SMC recovery criterion of 50-150 percent is advisory only. Reanalysis of samples are not performed if the SMC recovery is outside the advisory recovery limits.

3 Interferences

3.1 The analytical system must be demonstrated to be free from contamination under conditions of the analysis by analyzing method blanks. The use of non-Teflon plastic tubing, non-Teflon thread sealants, or flow controllers with rubber components should be avoided.

3.2 Samples can be contaminated by diffusion of volatile organics through the septum seal during shipment and storage. A field blank prepared by field samplers from reagent water and carried through the sampling and handling protocol as blinds or labeled as blanks can serve as a check on such contamination.

3.3 GC interferences by sample carryover may be minimized by using disposable glassware during sample preparation and employing the maximum possible rinse cycle for the automatic injection system.

3.4 Cross-contamination problems are minimized by analyzing instrument blanks after samples with high levels of target compounds or other interferents (see paragraph 22).

3.5 Dehydrochlorination of Tetrachloroethene to Trichloroethene may occur because of contamination or active sites in the headspace sample flow lines. If the Laboratory suspects this is occuring, it shall be noted in the Batch Narrative.

4 Apparatus and Materials

Brand names, suppliers, and part numbers are for illustrative purposes only. No endorsement is implied. Equivalent performance may be achieved using apparatus and materials other than those specified here; however, demonstration of equivalent performance meeting the requirements of this SOW is the responsibility of the Contractor.

4.1 Gas Chromatograph

The analytical system requirements include a temperature-programmable GC, heated headspace sampler, and all necessary accessories and detector systems designed or modified to accept capillary analytical columns. The GC system shall be capable of temperature programming and flow control that is stable throughout an analytical sequence. All GC carrier gas lines shall be constructed from stainless steel or copper tubing. Non-polytetrafluoroethylene (PTFE) thread sealants, or flow controllers with rubber components shall not be used.

4.1.1 Gas Chromatography Column - 30 m x 0.53 mm ID bonded phase silicone-coated fused silica capillary column (J&W DB-624, or equivalent). A film thickness of 3.0 μm is recommended.

NOTE: The use of a guard column is recommended.

4.1.2 Chromatography Detectors - The GC shall be equipped with a photoionization detector (PID) and an electrolytic conductivity detector (ELCD) in series.

4.1.2.1 Detector 1 - PID with 10.2 ev lamp.

4.1.2.2 Detector 2 - ELCD.

4.1.2.3 The two detectors operated in series may be interfaced by a short length of uncoated fused silica capillary column.

4.1.2.4 Gas Supply - The carrier gas must be ultrapure helium.

4.2 Automated Headspace Sampler - Hewlett-Packard Model 19395A, or equivalent.

4.3 Vials for Headspace Sampler - Headspace vials, 5-mL, with Teflon-faced septa, (or equivalent 5-mL vials). Note: Larger headspace vials may be used if equivalence in terms of meeting the CRQL requirements can be demonstrated.

4.4 Data System - The GC shall be linked to a data system capable of integrating peak areas for any compound detected at or above one-half the CRQL, providing retention time labeling, and relative retention time comparison. It is required that the Laboratory be equipped with a PC- or microcomputer-based GC data collection and reduction system for this purpose. The Laboratory shall possess this equipment to provide the quick turnaround of electronic data. The Laboratory shall also be equipped with a microcomputer and contract-specified hardware and software to electronically transfer the QTM data to the Regions.

4.5 Glassware - Sufficient glassware to meet contract requirements shall be reserved for exclusive use in support of this contract.

4.5.1 Disposable Pipets - (Pasteur) 6 or 9 in.

4.5.2 Autosampler Vials - appropriate for the GC system.

4.5.3 Volumetric Pipets/Repipets - 0.5-, 1.0-, 5.0-, 10-, and 25-mL.

4.5.4 Volumetric Flasks - 10-, 25-, 50-, and 100-mL.

4.5.5 Teflon-lined screw cap amber bottles.

4.6 Laboratory Hardware - The following equipment is required for sample preparation.

4.6.1 Balance - Calibrated and accurate to 0.1 g.

4.6.2 Balance - Calibrated and accurate to 0.0001 g.

4.6.3 Microsyringe - 10-, 50-, and 100-μL.

4.6.4 Spatula - stainless steel.

4.6.5 Vortex Mixer.

5 <u>Reagents</u>

5.1 Reagent water - Reagent water is defined as water in which target compounds or potentially interfering compounds do not produce a signal greater than one half the the response in the corresponding RRT window

of the initial calibration low concentration standard. Reagent water shall be generated by one of the following methods.

5.1.1 Reagent water may be generated by passing tap water through a carbon filter bed containing approximately 500 g of activated carbon (Calgon Corp., Filtrasorb-300, or equivalent).

5.1.2 Reagent water may be generated using a water purification system (Millipore-O-Plus with Organex Q cartridges, or equivalent).

5.1.3 Reagent water may be further prepared by boiling for 15 minutes, then bubbling contaminant-free inert gas through the water for one hour while maintaining the water temperature at 90°C. While still hot, transfer the degassed water to a narrow mouth screw-cap bottle, seal with a Teflon-lined septum and cap.

5.2 Solvents - Purge and trap grade methanol, or equivalent.

5.3 Corn oil.

6 <u>Standards</u>

6.1 Stock Standard Solutions

Stock solutions may be prepared from pure standard materials as described below or purchased as certified solutions (also see Exhibit E, Section V for preparing and verifying the integrity of the stock standard solutions).

6.1.1 Place about 9.8 mL of methanol in a 10-mL tared ground-glass-stoppered volumetric flask. Allow the flask to stand, unstoppered, for about 10 minutes or until all alcohol-wetted surfaces have dried. Weigh the flask to the nearest 0.1 mg.

6.1.2 Allow the pure standards of the analytes to come to room temperature. Use only standards that have been analyzed previously by the Laboratory or that were purchased with a certificate of analysis.

6.1.3 Add the appropriate measured volume of each standard to the flask using a 100-μL syringe below the liquid line.

6.1.4 Reweigh the flask and calculate the concentration of the standard weight per volume (w/v). Calculate the concentration in micrograms per microliter (μg/μL) from the net gain in weight. Bring to volume with methanol. Immediately restopper the flask. When compound purity is assayed to be 96 percent or greater, the weight may be used without correction to calculate the concentration of the stock standard.

6.1.5 Mix the standard by inverting the flask three times.

6.1.6 Commercially prepared stock standards may be used at the concentration certified by the manufacturer or by an independent source. The Laboratory shall maintain certificates of analyses with its case files.

6.1.7 Transfer the stock standard solution into a Teflon-sealed screw-cap bottle. Store, with minimal headspace, in freezer and protect from light.

6.1.8 Prepare or acquire fresh standards no less than every six months. The Laboratory shall replace standards whenever comparison with check standards indicate a problem.

6.2 Secondary Dilution Standards

6.2.1 Using stock standard solutions, prepare secondary dilution standards in methanol, containing the compounds of interest.

6.2.2 Secondary dilution standards shall be stored in a freezer (-10°C to -20°C) with minimal headspace and checked frequently for signs of degradation or evaporation. These procedures are especially important just prior to preparing calibration standards. Each of the secondary dilution standards shall not be used any longer than one week after vial is opened. Unused vials of the secondary standard solutions may be stored in the freezer for up to six months from the time the original stock standard solutions were prepared.

NOTE: Standards should not be stored in volumetric flasks, especially when they are prepared with solvents with low boiling points.

6.3 Calibration Standards

6.3.1 Calibration standards (initial and check) must be prepared on the day that they are used by spiking an appropriate amount of secondary dilution standard into a 5-mL headspace vial containing 2 mL of reagent water. The lower concentration standard shall be at the CRQL as listed in Exhibit C. The high concentration level shall be near the upper end of the linear range (NOTE: The high level standard concentrations given below are the minimum required under this method. The Laboratory may analyze a standard at a higher concentration level as long as the %RSD criteria are met.) All standards shall be stored at 4°C (± 2°C) in Teflon-sealed headspace vials until used.

6.3.2 VOA calibration standard concentrations.

Calibration Ranges (µg/L) Compound	Low	Mid	High
Benzene	20	100	500
Bromodichloromethane	20	100	500
Bromoform	20	100	500
Carbon tetrachloride	20	100	500
Chloroform	20	100	500
Chlorobenzene	20	100	500
1,1-Dichloroethane	20	100	500
1,2-Dichloroethane	20	100	500
1,1-Dichloroethene	20	100	500
cis-1,2-Dichloroethene	20	100	500
trans-1,2-Dichloroethene	20	100	500
Ethylbenzene	20	100	500
1,1,2,2-Tetrachloroethane	20	100	500
Tetrachloroethene	20	100	500
Toluene	20	100	500
ortho-Xylene	20	100	500
para-Xylene*	20	100	500
1,1,1-Trichloroethane	20	100	500
Trichloroethene	20	100	500
Vinyl chloride	20	100	500
4-Bromofluorobenzene (SMC)	20	100	500

* Meta- and para-xylene coelute in the GC system. Consequently, these compounds are quantitated on the basis of the para-xylene calibration factor.

6.4 Calibration Check Standard

The calibration check is a daily one-point check on the initial calibration. The calibration check standard shall be prepared by adding an appropriate amount of secondary dilution standard into a 5-mL headspace vial containing 2 mL of reagent water. The concentration of the calibration check standard is the same as the mid level standard used in the initial calibration.

6.5 System Monitor Compound

The System Monitor Compound (SMC), is 4-Bromofluorobenzene (BFB). A stock solution in methanol shall be prepared as described in paragraph 6.1, and an SMC spiking solution at a concentration of 50 µg/mL in methanol shall be prepared from the stock. Each sample shall be spiked with the SMC solution before analysis. The SMC is used to monitor the headspace sampler and GC system, and to provide a retention time marker on which to base relative retention time calculations.

6.6 Performance Verification Standard

The Performance Verification Standard (PVS) shall be analyzed at least once during each analytical sequence to assess system stability. The PVS is two times the concentration of the low level calibration standard used in the initial calibration as specified in paragraph 6.3.2.

6.7 Laboratory Control Sample

Laboratory Control Samples (LCS) containing known amounts of target compounds traceable to primary standards will initially be supplied by the Agency. Following these initial supplies, however, the Laboratory shall prepare its own LCS standards (paragraph 23 specifies the LCS compounds and concentrations). The LCS shall be spiked into a clean matrix and prepared using all steps of this protocol. An appropriate amount of the LCS shall be added to reagent water and analyzed with each Batch of water samples. An appropriate amount of the LCS shall be added to clean quartz sand and analyzed with each Batch of soil/solid samples. An appropriate amount of the LCS shall be added to clean corn oil and analyzed with each Batch of oil samples. If a Batch contains water, soil/solid, and oil samples, an LCS shall be prepared and analyzed for each matrix. All LCS compounds must have recoveries between 30 percent and 110 percent before sample analysis may begin (see paragraph 23).

NOTE: The Laboratory is expected to maintain control charts of the recoveries of at least three (3) representative LCS compounds as an internal QC procedure.

6.8 Storage of Standard Solutions

6.8.1 Stock and secondary standard solutions shall be stored at -10°C to -20°C in Teflon-lined screw-cap amber bottles.

6.8.2 Initial calibration standard solutions shall be stored at 4°C (± 2°C) in Teflon-sealed headspace vials until use.

6.8.3 All standards shall be protected from light.

6.8.4 Samples and standards shall be stored separately.

SECTION III

INSTRUMENT QUALITY CONTROL PROCEDURES AND REQUIREMENTS

7 Instrument Operating Conditions

The following are the suggested gas chromatographic analytical conditions.

Column: J&W DB-624 (or equivalent), 30 m x 0.53 mm ID, 3.0 µm film thickness fused silica capillary column (FSCC).

Carrier Gas:	Helium
Flow Rate:	11-13 mL/min
Initial Column Temperature:	50°C
Initial Column Holding Time:	4 min
Ramp Rate:	8°C/min
Final Temperature:	190°C
Final Hold Time:	4 min (until SMC elutes)
Approximate GC Cool Down Time:	10 min

NOTE: The typical run time under these conditions is 26 minutes. It may be necessary to adjust GC conditions on individual instruments to optimize compound separation. It may be necessary to adjust detector conditions to optimize instrument sensitivity.

7.1 Electrolytic Conductivity Detector

Operate in halogen mode using Unisolv detector solvent.

Furnace temperature: 800-900°C

Vent time: 0.25 min

Other settings - according to manufacturer's specifications.

7.2 Photoionization Detector

The PID requires a 10.2-ev bulb.

Set up according to manufacturer's specifications.

7.3 Recommended settings for Headspace Sampler

These settings were developed for use with a Hewlett-Packard Model 19395A headspace sampler. The use of other suitable equipment is allowed, but the Laboratory shall develop conditions that give suitable performance with any alternative instrumentation. These conditions must be properly validated and documented by the Laboratory.

7.3.1 Temperature Settings

Sampler bath temperature: 60°C

Valve loop temperature: 100°C

7.3.2 Gas pressure and settings (for Hewlett Packard Model 19395A)

Gas Mode	Type Gas	Gauge Pressure (Barr)
Carrier	Helium	0.7
Auxiliary	Helium	1.1
Servo Air	Air	3.1

7.3.3 Programming timing for valve operation events

Set Points Displays (time reading in sec.)	Key to Press	Function/Activity
"01"	PROBE	Probe enters vial
"03"	PRESSURE	Starts pressurization
"13"	PRESSURE	Stops pressurization
"14"	VENT/FILL LOOP	Starts venting
"25"	VENT/FILL LOOP	Stops venting
"26"	INJECT	Starts injection
"227"	INJECT	Stops injection
"228"	PROBE	Raises probe from vial

7.4 Detector Operation

The ELCD and PID require more care and attention than most other GC detectors. The following guidance in the operation of these detectors is provided to laboratories using this method. Laboratories that follow this guidance should have less downtime and fewer unpaid sample reruns.

Note: The Laboratory shall specify in the Batch Narrative the target compounds associated with (detected by) each of the detectors.

7.4.1 The ELCD nickel reaction tube should be replaced once a month as they may develop hot spots and burn pinholes which affect detector response and background noise level.

7.4.2 The Teflon transfer line of the ELCD should be replaced if peak tailing is observed.

7.4.3 An instrument log should be maintained which includes response data. If the response obtained in an initial calibration changes more than 20 percent from historical values, the ELCD should be checked for leaks before samples are analyzed.

7.4.4 The PID area response should be monitored using toluene and ethylbenzene. If the response ratio changes by more than 20 percent, or if either area response decreases more than 20 percent, the detector window should be cleaned or the PID lamp bulb replaced.

7.4.5 Control charts should be maintained for bromoform and chloroform response on the ELCD. The ratio between the bromoform and chloroform responses is an indication of reactor tube condition.

7.4.6 Use of control charts for the unit level calibration responses of bromoform and chloroform on the ELCD and for toluene and ethylbenzene on the PID should be updated daily. It is generally not necessary to monitor more than these four compounds in control charts.

8 Calibration of the GC System - Initial Calibration

8.1 Summary

8.1.1 Prior to the analysis of samples and required blanks, each GC system must be initially calibrated to ensure that the instrument meets the minimum performance requirements of the method. The initial calibration is accomplished by analyzing three standards; the low level, mid level, and high level mixtures as specified in paragraph 6.3.2. The technical acceptance criteria for the initial calibration are given in paragraph 8.5. The initial calibration shall be used to establish the calibration factors used for compound quantitation, to define the retention time windows for compound identification, and to determine the mean SMC retention time for evaluating SMC shift during analyses. Detector response must be linear for all target compounds. All samples shall be analyzed during the contract specified 24-hour analytical sequence.

8.1.2 Sample quantitation shall be based on the mean compound calibration factor, line segments ("K" curve), or the mid level calibration factor from the initial calibration. (The use of the line segment or "K" curve is suggested.) All field and QC samples and standards within a Batch and all field and QC samples and standards analyzed in the same analytical sequence shall be quantitated using the same quantitation method.

8.1.3 Compound identification shall be based on RRT windows established during initial calibration in all field samples where the SMC recovery is greater than or equal to 10 percent and less than or equal to 200 percent.

8.1.4 Compound identification shall be based on absolute retention time windows established during initial calibration in all field samples where the SMC recovery is less than 10 percent, greater than 200 percent, or peak interferences are present.

8.1.5 Shifts in the chromatographic peaks shall be evaluated by comparing the RT of the SMC in all analyses with the mean RT of the SMC calculated from the initial calibration. The retention time shift is referred to as RTS or RT XD (see paragraph 17.4.1). The SMC RT for field and QC sample analyses must be within ± 1.0 percent of the mean RT calculated from the initial calibration.

8.2 Frequency

8.2.1 An initial three-point calibration shall be performed to determine the linearity of response of all target compounds and the SMC. A new initial calibration is required whenever calibration check standards or PVSs cannot satisfy QC criteria. A new initial calibration shall also be performed whenever major instrument maintenance has been performed such as column or detector replacement. An initial calibration must be performed for each GC and for each chromatographic column which are used to perform these analysis.

8.2.2 An analytical sequence is a contractually-defined sequence of GC analyses which consists of an initial three-point calibration or a valid calibration check, field samples, LCSs, method and instrument blanks, PVS, and other QC samples run within a 24-hour period (see paragraph 14 for the required sequence of samples).

8.2.3 Analysis of the initial calibration shall begin with the injection of the high level standard followed by the mid level and low level standards.

8.2.4 The analytical sequence concludes with an acceptable analysis of an instrument blank and a PVS (see paragraph 10).

8.2.5 Samples shall be analyzed only after meeting the technical acceptance criteria for the initial calibration.

8.3 Procedure

8.3.1 The GC system shall be set up per the requirements of paragraph 7.

8.3.2 Prepare calibration standard solutions containing the SMC and all target compounds using the procedure listed in paragraph 6.3.

8.3.3 The initial calibration solution shall be analyzed at the same temperature as the samples.

8.3.4 Analyze each calibration standard by using the same headspace sampler, headspace vial size, and GC conditions to be used for the samples and blanks.

8.4 Calculations

8.4.1 Calculate the calibration factor (ratio of the total peak area or height to the mass analyte in vial) for each target compound and the SMC in the three initial calibration standard analyses using equation D.1 (EQ. D.1). Note: Calculate the SMC calibration factor by using the response from the PID detector.

$$Calibration\ Factor = \frac{Total\ Area\ of\ Peak\ or\ Peak\ Height}{Mass\ of\ Analyte\ in\ Vial\ (ng)} \qquad \text{EQ. D.1}$$

8.4.2 Calculate the mean calibration factor for each target compound and the SMC.

8.4.3 Calculate the %RSD of the calibration factors of the low level, mid level, and high level standards for the initial calibration using the following equation.

$$\%RSD = \frac{SD}{\bar{x}} \times 100 \qquad \text{EQ. D.2}$$

where SD = Standard Deviation.

Standard Deviation is calculated using the following equation:

$$SD = \sqrt{\sum_{i=1}^{N} \frac{(x_i - \bar{x})^2}{N - 1}} \qquad \text{EQ. D.3}$$

where: x_i = individual calibration factor (per compound).

$\bar{x}$ = mean of three initial calibration factors (per compound).

N = number of calibration standards.

Equation D.4 is the general formula for the mean of a set of values:

$$\bar{X} = \sum_{i=1}^{N} \frac{X_i}{N} \qquad \text{EQ. D.4}$$

where: $\bar{X}$ = Mean of values.

X_i = Value.

N = Number of values.

8.4.4 Calculate the RRT for each target compound using the following equation:

$$RRT = \frac{RT_{component}}{RT_{SMC}} \qquad \text{EQ. D.5}$$

Note: The Laboratory may select the SMC retention time used with above equation from the PID or ELCD chromatogram. The Laboratory shall consistently use either the SMC RT from the PID or ELCD chromatogram (i.e., once the detector is selected to derive the SMC RT during the initial calibration, all subsequent analyses associated with that initial calibration shall utilize the SMC RT derived from the same detector).

8.4.5 Calculate the mean RRT and RT for each target compound by using equation D.4.

8.5 Technical Acceptance Criteria

8.5.1 The %RSD of the calibration factor for each target compound and the SMC in the initial calibration must be less than or equal to 25.0 percent. Up to two target compounds may exceed 25.0 percent RSD; however, all compounds must be less than or equal to 40.0 percent RSD.

8.5.2 The retention time of the SMC in each standard must be within ± 1.0 percent of the mean retention time calculated from the three initial calibration standards.

8.5.3 The peak resolution between cis-1,2-dichloroethene and chloroform shall be evaluated in the low level initial calibration standard before proceeding with sample analyses (see paragraph 11).

8.5.4 The chromatographic peak response for all target compounds in the low concentration standard must be greater than 10 percent of full-scale deflection.

8.6 Corrective Action

8.6.1 If the %RSD for more than two compounds in the initial calibration is greater than 25.0 percent or if any compound exceeds 40.0 percent RSD, the instrument has not demonstrated adequate linearity to be used for this method. Corrective action shall be taken and documented.

8.6.2 If the peak resolution criterion is not met, the Laboratory shall perform corrective action and demonstrate adequate resolution before samples can be analyzed.

8.6.3 If the SMC RT is not within ± 1.0 percent of the mean SMC RT calculated from the three initial calibration standards, the Laboratory shall perform corrective action which may include a new initial calibration. DO NOT proceed with sample analysis until the retention time shift (RTS) is within ± 1.0 percent.

8.6.4 If the peak response for any target compound in the low concentration standard is not greater than 10 percent of full-scale deflection, the Laboratory shall perform corrective action and make appropriate adjustments before sample analyses are started, to ensure that all target compound peak responses in the low concentration standard are greater than 10 percent of full-scale deflection.

8.6.5 Corrective action may include optimizing ELCD detector linearity by adjusting gas flows, replacing the ELCD nickel catalyst, by cleaning detector optics, or by replacing the bulb. Action may also include replacing the pre-column, removing 0.5 - 1 m of the analytical column, or replacing the standards.

Note: major corrective actions (e.g., column, detector replacement, etc.) will require a new initial calibration.

8.6.6 All initial calibration technical acceptance criteria shall be met before any samples or required blanks are analyzed. Any samples or required blanks analyzed when the initial calibration criteria have not been met shall require reanalysis at no additional cost to the Agency.

8.7 Documentation

Initial calibration results are reported on Forms QIVA-VOA, QIVB-VOA, and QVI-VOA. Reporting requirements are listed in Exhibit B.

9 Calibration of the GC System - Calibration Check

9.1 Summary

A check of the calibration curve shall be performed at the beginning of every 24-hour analytical sequence that includes field sample analyses. This check of the calibration shall be performed using the mid level standard and shall contain all target compounds and the SMC. The percent difference (%D) between the calibration factor in the calibration check standard and the average calibration factor from the initial calibration is calculated for each target compound and the SMC, and must meet the technical acceptance criteria given in paragraph 9.5. The SMC RTS and column resolution must also meet technical acceptance criteria as stated in paragraph 9.5 and paragraph 11, respectively. Only after all these criteria are met can sample analysis begin.

NOTE: Compound identification and quantitation shall be performed based on calibration factors and compound RRT and RT windows established during the initial calibration.

9.2 Frequency

9.2.1 Each GC used for analysis shall be checked to verify the initial calibration for each 24-hour period of operation. This procedure is to ensure that the instrument continues to meet the instrument sensitivity and linearity requirements of this method.

9.2.2 An analytical sequence is a contractually-defined sequence of GC analyses which consists of an initial three-point calibration or a valid calibration check standard, field samples, LCS, method and instrument blanks, PVS, and other QC samples run within a 24-hour period (see paragraph 14).

9.2.3 The analytical sequence shall be concluded with an acceptable analysis of an instrument blank and a PVS (see paragraph 10).

9.2.4 Samples shall be analyzed only after meeting the technical acceptance criteria for a valid calibration check standard.

9.3 Procedure

9.3.1 The GC system shall be set up per the requirements of paragraph 7.

9.3.2 Prepare calibration check standard solutions containing the SMC and all target compounds using the procedures listed in paragraphs 6.3 and 6.4.

9.3.3 Analyze the calibration check standard by using the same heated headspace sampler, headspace vial size, and GC conditions to be used for the samples and blanks.

9.3.4 The GC conditions shall be the same as used for analyzing samples.

9.3.5 The calibration check standards shall be analyzed at the same temperature as the samples.

9.4 Calculations

9.4.1 Calculate the calibration factor (ratio of the total peak area or height to the mass analyte in vial) for each target compound and the SMC in the calibration check standard mix using the following equation. Note: Calculate the SMC calibration factor by using the response from the PID detector.

$$\textit{Calibration Factor} = \frac{\textit{Total Area of Peak or Peak Height}}{\textit{Mass Analyte in Vial (ng)}} \qquad \text{EQ. D.6}$$

9.4.2 Calculate the %D between the calibration factors from the calibration check standard and the average calibration factors from the initial calibration using the following equation.

$$\%D = \frac{\bar{x} - x_c}{\bar{x}} \times 100 \qquad \text{EQ. D.7}$$

where,

$\bar{x}$ = mean of three initial calibration factors (per compound).

x_c = calibration factor from current calibration check standard (per compound).

9.5 Technical Acceptance Criteria

9.5.1 The %D between the calibration factors for each target compound and the SMC in the calibration check standard and the mean calibration factor for that compound in the initial calibration must be within ± 35.0 percent. Up to two target compounds may exceed ± 35.0 %D; however, all compounds must be within ± 45.0 %D.

9.5.2 All target compound absolute and relative retention times must be within the windows established during the initial calibration. Report calibration check RT and RRT data on Form QI-VOA (see Exhibit B).

9.5.3 The retention time of the SMC in the calibration check standard must be within ± 1.0 percent of the mean SMC retention time calculated from the three initial calibration standards.

9.5.4 The peak resolution between cis-1,2-dichloroethene and chloroform shall be evaluated in the calibration check standard before proceeding with sample analyses (see paragraph 11).

9.6 Corrective Action

9.6.1 If the %D for more than two compounds is not within ± 35.0 <u>or</u> if any compound is not within ± 45.0 %D, analyze another calibration check standard. If upon reanalysis any compound is still outside the criteria, a new initial calibration must be performed before samples can be analyzed. The instrument must be recalibrated as described in paragraph 8.

9.6.2 If the RT or RRT for any compound is not within the RT and RRT windows established during the initial calibration, analyze another calibration check standard. If upon reanalysis a compound is still outside the window, a new initial calibration must be performed before samples can be analyzed. The instrument must be recalibrated as described in paragraph 8.

9.6.3 If the SMC RTS is not within ± 1.0 percent of the mean SMC RT calculated from the initial calibration, another calibration check standard shall be immediately analyzed. If the RTS is still outside the criterion upon reanalysis, corrective action shall be performed, which may include a new initial calibration. DO NOT proceed with sample analyses until the RTS is within ± 1.0 percent.

9.6.4 If the peak resolution criterion is not met, the Laboratory shall perform corrective action and demonstrate adequate resolution before samples can be analyzed.

9.6.5 All calibration check technical acceptance criteria shall be met before any samples or required blanks are analyzed. Any samples or required blanks analyzed when the calibration check criteria have not been met shall require reanalysis at no additional cost to the Agency.

9.7 Documentation

Calibration check standard results are reported on Forms QI-VOA, QV-VOA, and QVI-VOA. Reporting requirements are listed in Exhibit B.

10 Calibration of the GC System - Performance Verification Standard (PVS)

10.1 Summary

A PVS shall be analyzed at the end of every 24-hour analytical sequence. The analysis of the PVS shall be started within 24 hours after the injection of the first initial calibration standard or the instrument blank analyzed before a valid calibration check standard. The PVS is two times the concentration of the low level standard from the initial calibration (see paragraph 6.3.2); therefore, the PVS shall contain all target compounds and the SMC.

10.2 Frequency

An acceptable PVS must be analyzed at the conclusion of the analytical sequence. The PVS analysis shall be started within 24 hours after the injection of the first initial calibration standard or the instrument blank analyzed before a valid calibration check standard. If a successful PVS analysis is not obtained at the conclusion of the analytical sequence, all samples analyzed since the last successful PVS, initial calibration, or valid calibration check standard shall be reanalyzed in a valid analytical sequence at no additional expense to the Agency. The Laboratory is encouraged to run additional PVS analyses during an analytical sequence to minimize unpaid reanalyses. If an acceptable PVS is analyzed during an analytical sequence, the Laboratory may continue to collect data under the current calibration until the conclusion of the current 24-hour sequence. If at any time an unsuccessful PVS analysis is made, the Laboratory shall stop sample analysis and immediately reanalyze another PVS. If on reanalysis the PVS is still outside QC criteria, the Laboratory shall take corrective action and recalibrate the GC (run a new initial calibration) prior to reinitiating sample analyses. Recalibration will begin a new analytical sequence.

10.3 Procedure

10.3.1 The PVS is two times the concentration of the low level standard from the initial calibration (see paragraph 6.3.2).

10.3.2 Analyze the PVS by using the same headspace sampler, headspace vial size, and GC conditions used for the samples and blanks.

10.3.3 The recovery of each compound and the SMC in the PVS is quantitated using the mean calibration factor, the mid point, or by using a K curve established during the initial calibration. (NOTE: Only one method of quantitation shall be used for analyses within a given analytical sequence and for a given Batch of samples.)

10.4 Calculations

The amount of PVS compounds and the SMC recovered shall be calculated using the following equations:

$$Amount\ Observed = \frac{A_x}{CF_m} \qquad \text{EQ. D.8}$$

where: A_x = area or peak height of the PVS compound or SMC.

CF_m = calibration factor established by one of three techniques during the initial calibration.

Note: Calculate the SMC amount using the response from the PID detector.

$$Amount\ Recovered = \frac{Amount\ Observed\ (ng)}{Amount\ Added\ (ng)} \times 100 \qquad \text{EQ. D.9}$$

10.5 Technical Acceptance Criteria

10.5.1 All PVS target compounds must have a calculated recovery of 75-125 percent in order to report data without flags.

10.5.2 If recovery of a compound is not within 75-125 percent but still within an expanded recovery window of 50-150 percent, the associated sample analyses results shall be flagged (see paragraph 10.6).

10.5.3 The SMC recovery criterion of 50-150 percent is advisory only. Reanalysis of the PVS is not made if the SMC recovery is outside the advisory recovery limits. The SMC recovery in the PVS must, however, be greater than or equal to 20 percent and less than or equal to 200 percent (see paragraph 10.6).

10.5.4 All target compound absolute and relative retention times must be within the windows established during the initial

calibration. Report PVS RT and RRT data on Form QI-VOA (see Exhibit B).

10.5.5 The RTS for the SMC in the PVS must be within ± 1.0 percent of the mean SMC RT calculated from the initial calibration.

10.5.6 The peak resolution between cis-1,2-dichloroethene and chloroform shall be evaluated in the PVS before proceeding with sample analyses (see paragraph 11).

10.6 Corrective Action

10.6.1 If recovery of a compound is not within 75-125 percent but still within an expanded window of 50-150 percent, flag the outlier compound "P" in all associated field sample results generated since the last valid PVS, initial calibration or valid calibration check standard.

10.6.2 If any PVS compound is outside the expanded range, another PVS shall be analyzed immediately. If, on reanalysis, any compound is still outside the expanded recovery range, stop sample analyses, perform corrective action, run a new initial calibration, and reanalyze all samples run after the last valid PVS, initial calibration, or valid calibration check standard before proceeding with sample analyses.

10.6.3 If the RT or RRT for any compound is not within the RT and RRT windows established during the initial calibration, analyze another PVS. If upon reanalysis a compound is still outside the windows, a new initial calibration must be performed before samples can be analyzed. The instrument must be recalibrated as described in paragraph 8 and reanalyze all samples run after the last valid PVS, initial calibration, or valid calibration check standard before proceeding with sample analyses.

10.6.4 If the SMC RTS criterion is not met for a PVS, sample analyses shall be stopped and another PVS shall be immediately analyzed. If the SMC RTS is still outside the criterion upon reanalysis, corrective action shall be performed, which may include a new initial calibration. DO NOT continue with sample analyses until the RTS is within ± 1.0 percent. Reanalyze all samples that were run between the noncompliant PVS and the last valid PVS, initial calibration, or valid calibration check standard before proceeding with sample analyses.

10.6.5 If the PVS SMC recovery is less than 20 percent or greater than 200 percent, or if peak interferences are present, stop sample analyses, perform corrective action, and immediately

reanalyze another PVS. If the SMC recovery is still out on reanalysis, perform corrective action and start a new analytical sequence. All samples analyzed since the last valid PVS, initial calibration, or valid calibration check standard shall be reanalyzed within a valid analytical sequence.

10.6.6 If the peak resolution criterion is not met, the Laboratory shall perform corrective action and demonstrate adequate resolution before samples can be analyzed (see paragraph 11).

10.6.7 If all PVS criteria cannot be met after having taken corrective action, reanalyze the associated field samples in another valid analytical sequence. If on reanalyses all QC sample criteria are met and the PVS criteria still cannot be met, then submit all sample data from both sequences. The Laboratory shall describe in the Batch narrative the problems associated with the PVS and how the field sample matrix may have affected the PVS analyses. If the Laboratory can demonstrate that the problems are due to matrix effects, then both sequences are billable.

10.6.8 If a PVS reanalysis is required because of a non-compliant initial PVS analysis, the PVS reanalysis must be started within 26 hours after the start of the current analytical sequence.

10.6.9 Because reanalysis, at no additional cost to the Agency, is required if PVS technical acceptance criteria are not met, more frequent analysis of the PVS is recommended, especially when highly contaminated or complex samples are analyzed.

10.7 Documentation

Results of PVS analyses are reported on Forms QI-VOA, QIII-VOA, and QVI-VOA. Reporting requirements are listed in Exhibit B.

11 <u>System Performance - GC Resolution</u>

11.1 Summary

Peak resolution between cis-1,2-dichloroethene and chloroform shall be measured to establish that there is sufficient chromatographic resolution for accurate compound identifications and quantitations. When minimum peak resolution cannot be met, identification and quantitation is adversely affected due to the difficulty in establishing the baseline.

11.2 Frequency

11.2.1 Initial calibration - The peak resolution between cis-1,2-dichloroethene and chloroform shall be evaluated in the low initial calibration standard before proceeding with sample analyses.

11.2.2 Calibration check standard - The peak resolution between cis-1,2-dichloroethene and chloroform shall be evaluated for each calibration check standard before proceeding with sample analyses.

11.2.3 Performance verification standard - The peak resolution between cis-1,2-dichloroethene and chloroform shall be evaluated for each PVS that is analyzed in a valid analytical sequence.

11.3 Calculations

Determine resolution by calculating the percent valley between two peaks using the following equation (see figure 1).

$$\text{Percent Valley} = \frac{\text{Height of the valley between cis-1,2-dichloroethene and chloroform}}{\text{Peak height of smaller peak being resolved}} \times 100 \qquad \text{EQ. D.10}$$

11.4 Technical Acceptance Criteria

11.4.1 Initial calibration - The percent valley must be less than or equal to 25 percent between cis-1,2-dichloroethene and chloroform in the analysis of the low standard of the initial calibration.

11.4.2 Calibration check standard - The percent valley must be less than or equal to 25 percent between cis-1,2-dichloroethene and chloroform in the calibration check standard.

11.4.3 Performance verification standard - The percent valley must be less than or equal to 35 percent between cis-1,2-dichloroethene and chloroform in the analysis of the PVS.

11.5 Corrective Action

11.5.1 If the peak resolution for the two compounds indicated in paragraph 11.1 exceeds the 25 percent valley criterion in the low level standard analyzed during the initial calibration, corrective action shall be taken, and a new initial calibration shall be performed and documented before proceeding with sample analyses.

11.5.2 If the peak resolution for the two compounds indicated in paragraph 11.1 exceeds the 25 percent valley criterion in the mid level calibration check standard, corrective action shall be performed. A valid calbration check must be demonstrated or a new initial calibration shall be performed and documented before proceeding with sample analyses.

11.5.3 If the percent valley for the PVS does not meet the technical acceptance criteria indicated in paragraph 11.4, another PVS shall be immediately analyzed. If after reanalysis the PVS percent resolution is still outside criterion, corrective action shall be performed and a valid calibration check demonstrated or new initial calibration performed. Reanalyze all samples run after the last valid PVS, initial calibration, or a valid calibration check standard before proceeding with sample analyses.

11.5.4 A high percent valley could indicate column degradation; therefore, column maintenance may be required. Maintenance may include removing 0.5 - 1 m of the column. If these measures do not work, column replacement should be considered.

11.6 Documentation

Percent resolution results are reported on Forms QIII-VOA, QIVA-VOA, and QV-VOA. Reporting requirements are listed in Exhibit B.

SECTION IV

SAMPLE ANALYSIS AND COMPOUND IDENTIFICATION AND QUANTITATION

12 Summary

12.1 This method is designed for use in the rapid analysis of water, soil/solid, and oil samples for the target compounds listed in Exhibit C. If upon inspection of a sample the Contractor suspects that the sample is not amenable to this method, contact the Regional TPO or the CLASS contractor for instructions. For Superfund emergency removal actions, contact the Regional Technical Project Officer or the Headquarters APO for instructions. If, for emergency response actions, the TPO or APO are not available, contact the Regional On-Scene Coordinator (OSC) for instructions. The Laboratory must remember that it shall follow the requirements in this SOW without deviation.

12.2 Before samples or required blanks can be analyzed, the instrument must meet initial calibration or calibration check standard and column resolution technical acceptance criteria. All samples, required blanks, LCS, PVS, and calibration standards shall be analyzed under the same instrumental conditions.

12.3 Blank samples such as trip blanks and field blanks supplied by the Region and included with a batch of field samples shall be prepared, analyzed, and reported as a water sample. Occasionally, a water QC sample (e.g., field and trip blanks) will be included with a batch of soil samples. If the laboratory is not certain whether a water sample associated with a batch of soil samples is a QC sample, contact the Regional TPO or the CLASS contractor.

NOTE: If water blanks provided by the Region such as trip and field blanks are included in a batch of soil samples, the laboratory will not prepare and analyze an associated water method blank or a water LCS.

12.4 If unusual or high concentration samples are received, see Exhibit D, Appendix B for general guidance on screening and sample preparation.

13 Procedure

13.1 Phase Separation

Multi-phasic samples shall be phase-separated into their individual phases. The phase separation techniques employed will vary according to the types of samples received. Since it is impossible to know the number and types of phases that will be present in a sample, the choice of phase separation techniques is left to the discretion of the analyst. Various techniques can be employed to separate the phases. These include pipetting off liquid phases (decanting should not be done),

centrifuging to remove suspended solids, and use of spatulas to remove solids (wooden tongue depressors work well). Whenever possible, phase separation operations should be done with disposable glassware. The phases should be separated into glass containers with teflon-lined screw caps. This allows for storage and handling of the waste in a safe manner.

13.1.1 Samples received containing multiple phases such as water, oil, and soil/solid in the same sample jar shall be "phase separated" into individual phases.

13.1.2 Each individual phase is taken through the procedure as a subsample. Report analytical results for each sample phase. Note: Each multi-phase sample shall be identified using the EPA sample number convention for multi-phase samples as specified in Exhibit B.

13.1.3 Do not analyze any phase that represents less than 10 percent of the total sample volume.

13.1.4 In the following procedures, where applicable, references to "samples" explicitly mean "single phase units."

13.2 Sample Preparation - Water Samples

13.2.1 Transfer 2 mL of sample to a 5-mL headspace vial, using a gas tight syringe.

13.2.2 Spike the sample with 4 µL of the SMC (50 µg/mL). Cap the vial immediately.

13.3 Sample Preparation - Soil/Solid Samples

13.3.1 Weigh 1 g of soil/solid in a 5-mL headspace vial. If there is a water layer on top, mix the layers and quickly transfer 1 g of the homogenized sample.

13.3.2 Add 2 mL of reagent water spiked with 4 µL of the SMC (50 µg/mL) and cap immediately.

13.3.3 Mix for 10 seconds using a vortex mixer.

NOTE: Weighing and addition of SMC must be performed rapidly to avoid loss of volatile compounds.

13.4 Sample Preparation - Oil Samples

Oil samples shall be tested for miscibility with methanol. If the sample is <u>not miscible</u> in methanol, then methanol extraction can be performed. It should be observed closely that the volume of methanol

does not increase dramatically. If the volume of methanol increases dramatically, this is an indication of a complex mixed phase, treat the sample as methanol non-miscible and note in the narrative. If it is hard to determine if the sample separates, then more methanol should be added. If the sample is miscible with methanol (no visible separation), then it should be tested for water miscibility.

13.4.1 Oil sample - Methanol Non-Miscible

If the oil sample is characterized as methanol extractable (not miscible with methanol), then the following procedure shall be used.

NOTE: For these samples the soil/solid CRQL of all the volatile target compounds will be increased by a factor of 10. The CRQL values on Form QI-VOA must reflect this adjustment.

13.4.1.1 Weigh 6 g of oil sample into a wide-mouth test tube. (Oily mixtures should first be phase-separated according to the procedures in paragraph 13.1.)

13.4.1.2 Add 6 mL of methanol and mix for 15 seconds using a vortex mixer.

13.4.1.3 Centrifuge the test tube containing the sample after extraction for approximately 5 minutes at 1000 to 2000 rpm. (Increase centrifugation time for samples that appear to contain fine particulates.)

13.4.1.4 Using a gas tight syringe, transfer 100 µL of methanol layer to a 5-mL headspace vial containing 2 mL of reagent water spiked with 4 uL of the SMC (50 µg/mL).

13.4.1.5 Cap the vial immediately.

13.4.2 Oil sample - Methanol Miscible/Aqueous Miscible

If the oil sample is miscible with methanol and water, then the sample is analyzed as a high level aqueous sample, and the following procedure shall be used.

NOTE: For these samples the water CRQL of all the volatile target compounds will be increased by a factor of 20. The CRQL values on Form QI-VOA must reflect this adjustment.

13.4.2.1 Using a gas tight syringe, transfer 100 µL of sample to a 5-mL headspace vial containing 2 mL of reagent water spiked with 4 uL of the SMC (50 µg/mL).

13.4.2.2 Cap the vial immediately.

13.4.3 Oil sample - Methanol Miscible/Aqueous Non-Miscible

If the oil sample is miscible with methanol and is non-miscible with water, it can probably be characterized as an organic solvent, and the following procedure shall be used.

NOTE: For these samples the soil/solid CRQL of all the volatile target compounds will be increased by a factor of 20. The CRQL values on Form QI-VOA must reflect this adjustment.

13.4.3.1 Weigh 6 g of oil sample into a wide-mouth test tube. (Oily mixtures should first be phase-separated according to the procedures in paragraph 13.1.)

13.4.3.2 Add 6 mL of methanol and mix for 15 seconds using a vortex mixer.

13.4.3.3 Centrifuge the test tube containing the sample after extraction for approximately 5 minutes at 1000 to 2000 rpm. (Increase centrifugation time for samples that appear to contain fine particulates.)

13.4.3.4 Using a gas tight syringe, quickly transfer 100 µL of the methanol diluted sample to a 5-mL headspace vial containing 2 mL of reagent water spiked with 4 uL of the SMC (50 µg/mL). Cap the vial immediately.

14 Instrumental Analysis

14.1 Set up the GC system per the requirements in paragraph 7.

14.1.1 Allow samples to equilibrate for 30 - 60 minutes at 60°C prior to starting the injection cycle.

14.1.2 Samples must be analyzed according to the following requirements. An analytical sequence consists of field sample analyses and all associated standards, blanks, and QC analyses performed within a 24-hour period on one instrument. There are two types of analytical sequences: an

initial calibration analytical sequence and a daily calibration check analytical sequence. All samples shall be analyzed within one of these analytical sequences.

14.1.2.1 An initial calibration analytical sequence begins with a three-point calibration, an instrument blank, an LCS, and a method blank. The initial calibration analytical sequence is as follows:

- Initial Three-point Calibration (analysis of the high standard followed by the mid and low standards);
- Instrument Blank;
- Laboratory Control Sample(s);
- Method Blank(s);
- Field Sample(s);
- Instrument Blank(s); and
- Performance Verification Standard(s).

14.1.2.2 A daily calibration check analytical sequence begins with an instrument blank, a valid calibration check standard, a method blank, and an LCS. The daily calibration analytical sequence is as follows:

- Instrument Blank;
- Calibration Check Standard;
- Method Blank(s);
- Laboratory Control Sample(s);
- Field Sample(s);
- Instrument Blank(s); and
- Performance Verification Standard(s).

14.1.3 If all acceptance criteria for these analyses are met, then the laboratory may proceed with sample analyses.

14.1.4 All analytical sequences conclude with an acceptable instrument blank and a PVS analysis. The PVS shall be started within 24 hours after the injection of the first initial calibration standard or the first instrument blank in the daily calibration sequence.

NOTE: If a PVS reanalysis is required because of a non-compliant initial PVS analysis, the PVS reanalysis must be started within 26 hours after the start of the current analytical sequence.

14.1.5 For a matrix group of samples that are analyzed in an analytical sequence, the associated method blank and LCS shall be analyzed in the same analytical sequence.

14.2 Computer reproductions of chromatograms that are attenuated to ensure that all peaks are on scale over a 100-fold range are acceptable. However, post analysis attenuation shall be no greater than a 100-fold range. This is to reduce the potential for RTSs of compounds due to column overload and to ensure that the detector is operating within the calibration range. If any sample compounds exceed the calibration range, the sample shall be diluted according to paragraph 15.

14.3 If any saturated non-target compound chromatographic peaks are evident or if any chromatographic peaks overlap more than one RRT and/or RT target compound windows, the Laboratory shall use the "E,N" flags on Form QI-VOA to indicate this situation.

14.3.1 If saturated chromatographic peaks outside target compound RRT and/or RT windows are evident, flag the nearest target compound "E,N" on Form QI-VOA.

14.3.2 If chromatographic peaks overlapping more than one target compound RRT and/or RT windows are evident, flag the corresponding target compounds "E,N" on Form QI-VOA.

14.4 Chromatographic peak response must be greater than 10 percent and less than 100 percent of full-scale deflection to ensure that individual compounds will be visible during data review.

15 <u>Dilutions</u>

15.1 Samples with compounds exceeding the calibration range of the GC must be reported with the "E" data flag as described in Exhibit B. Upon evaluation, the Region may require that the samples be diluted and reanalyzed in a valid analytical sequence as additional paid samples. Reextraction and/or reanalysis of samples can only be authorized by the CLASS contractor acting on behalf of the Regional TPO or Headquarters APO. The Laboratory shall perform the dilution analysis as specified below in paragraphs 15.2.2 and 15.2.3.

15.2 The Laboratory may dilute samples prior to initiating sample analysis. The resulting analysis of those samples must produce chromatograms with at least one target compound present at a concentration greater than that found in the mid point calibration mixture. If no compound is identified in the diluted sample at a concentration that exceeds the mid level standard, then the undiluted sample shall be reanalyzed at no additional cost to the Agency.

15.2.1 At the request of the Region, sample dilution may be required prior to the initial analysis. If no target compounds are detected in the diluted samples at the mid point concentration or greater, then the undiluted sample shall be reanalyzed as an additional paid sample.

15.2.2 Dilutions of water samples or methanol miscible/aqueous miscible oil samples (see paragraph 13.4) shall be made by using an appropriate aliquot of sample diluted with reagent water.

NOTE: Dilute samples prior to the addition of the SMC.

15.2.3 Soil/solid samples requiring dilution shall be prepared by adding a smaller sample aliquot to 2 mL of reagent water. The minimum amount of soil/solid sample that can be used is 100 mg. If dilutions greater than 1/10 are required, soil/solid samples shall be diluted by adding 5 mL of methanol to 1 g of soil/solid and adding an appropriate volume of the methanol extract to 2 mL of reagent water spiked with 4 µL of SMC in a 5-mL headspace vial. If methanol extraction or dilution is performed, the Laboratory shall also prepare a method blank spiked with the same amount of methanol (see paragraph 21).

Note: It may be necessary to sonicate and/or centrifuge some types of solids in order to disperse and fractionate these matrices for more effective extractions.

15.2.4 Dilutions of the methanol non-miscible oil (see paragraph 13.4.1) and methanol miscible/aqueous non-miscible oil (see paragraph 13.4.3) shall be made by adding smaller amounts of the sample extract to 2 mL of the reagent water spiked with 4 µL of SMC in a 5-mL headspace vial. For large dilutions, the extracts may be serially diluted in water and a portion may be added to 2 mL of the reagent water spiked with 4 µL of SMC in a 5-mL headspace vial. If methanol extraction or dilution is performed, the Laboratory shall also prepare a method blank spiked with the same amount of methanol (see paragraph 21).

15.2.5 Sample dilutions shall be analyzed in a valid analytical sequence which includes the associated method blank and LCS.

15.2.6 If sample reextractions and reanalyses are required, the Laboratory shall also reextract and reanalyze an associated method blank and LCS.

16 Identification of Target Compounds

16.1 Retention Time Standard - The SMC shall be used as the RT marker for compound identification. The SMC shall also be used to monitor heated headspace sampler efficiency.

In each analysis, the SMC RT must be within ± 1.0 percent of the mean RT of the SMC established during the initial calibration.

16.2 Compound identification when SMC recovery is greater than or equal to 10 percent and less than or equal to 200 percent.

16.2.1 Target compounds shall be identified on the basis of RRT in all field samples for which the SMC recovery is greater than or equal to 10 percent and less than or equal to 200 percent.

16.2.2 Peaks in sample chromatograms shall be identified as target compounds if their RRT is within ± 0.005 RRT units of the mean RRT established during initial calibration.

16.3 Compound identification when SMC recovery is less than 10 percent, greater than 200 percent, or if peak interferences are present.

16.3.1 Target compounds shall be identified on the basis of absolute RT in all field samples for which the SMC recovery is less than 10 percent, greater than 200 percent, or if peak interferences are present.

16.3.2 Peaks in sample chromatograms shall be identified as target compounds if their absolute RT is within ± 1.0 percent of the mean RT established during the initial calibration.

16.3.3 Any compound identified on the basis of absolute RT shall be flagged with the qualifier "T" (See Exhibit B).

16.3.4 If the recovery of the SMC in a field sample is less than 10 percent, greater than 200 percent, or if peak interferences are present, acceptable recovery of the SMC must be obtained in the associated method blank and LCS (see paragraphs 21 and 23).

16.4 If multiple peaks are within the identification windows (target compound and SMC), the Laboratory shall use professional judgement to properly identify the appropriate peak. The Laboratory should consider the inherent matrix effects of the sample on peak shifting, masking, and overlaps when making identification determinations. The Laboratory should take into consideration the mean RT and RRT from the initial calibration, RT and RRT from the calibration check standard, and the SMC RT from relatively clean samples analyzed before and after the sample in question as a basis for selecting the most appropriate peak. The Laboratory shall describe in the Batch Narrative the rationale used for choosing a particular peak (e.g., chose peak closest to the RT of the peak in calibration check standard) as the target compound or SMC and how the field sample matrix may have affected peak identification.

17 Calculations

17.1 Calculate the RRT of a sample component or a standard using the following equation:

$$RRT = \frac{RT_{component}}{RT_{SMC}} \qquad \text{EQ. D.11}$$

where:

RRT = relative retention time

$RT_{component}$ = retention time of the target compound

RT_{SMC} = retention time of the SMC

17.2 Calculate the calibration factor for a compound by one of three techniques using data collected during an acceptable initial calibration (paragraph 8). Only one of the quantitation techniques listed below shall be used for quantitating samples within a Batch and analyzed within a given analytical sequence. The use of the line segment or "K" curve is suggested.

17.2.1 Use the "K" curve (line segments) established during initial calibration. The segments run from the low to the mid point and from the mid to the high point calibration mixtures. (Note: do not extend line segment through the origin if the concentration is below the CRQL).

17.2.2 Use the calibration factors based on the mid point of the initial calibration curve. This option may be used as long as the mid point values are within ± 10 percent of the average of the high and low point values.

17.2.3 Use the mean calibration factor established during the initial calibration.

17.2.4 Quantitation of compounds is based on the calibration factors established during the initial calibration.

17.2.5 All calibration requirements, including the initial calibration %RSD and the calibration check %D criteria, must be met regardless of the quantitation technique used.

17.3 Quantitation of Target Compounds

Calculate the concentration in the sample using one of the following equations for external standards. The response can be measured by automated peak height or integrated peak area measurements.

17.3.1 Water and Oil (Methanol Miscible/Aqueous Miscible)

$$Concentration\ (\mu g/L) = \frac{(A_x)\ (DF)}{(CF_m)\ (V_s)} \qquad \text{EQ. D.12}$$

where:

A_x = response for the analyte to be measured.

CF_m = calibration factor established by one of three techniques during the initial calibration. (NOTE: Only one method of quantitation may be used for samples within a Batch and analyzed within an analytical sequence).

V_s = volume of water analyzed (mL).

DF = Dilution Factor.

17.3.2 Soil/Solid (Wet-weight basis) and Oil (Methanol Non-Miscible and Methanol Miscible/Aqueous Non-Miscible)

$$Concentration\ (\mu g/kg) = \frac{(A_x)\ (DF)}{(CF_m)\ (W_s)} \qquad \text{EQ. D.13}$$

where:

A_x, CF_m = same as given in Equation D.12.

W_s = weight of sample analyzed (g).

DF = Dilution Factor. If methanol extraction was performed, DF = $\frac{\text{mL methanol added to sample}}{\text{mL methanol extract analyzed}}$
If methanol extraction was not performed, DF=1.

17.4 Calculate the SMC amount observed and amount (percent) recovered using equations as described in paragraph 10.4.

17.5 The RTS shall be monitored using the SMC (paragraph 16.1). The RTS shall be measured for all analyses.

17.5.1 Calculate the retention time percent difference (RT %D) of the SMC in the field and QC samples or subsequent standards analyzed and the mean SMC RT from most recent initial calibration analyzed using the following equation.

$$RT\%D = \frac{RT_c - RT_s}{RT_c} \times 100 \qquad \text{EQ. D.14}$$

where:

RT %D = Retention time shift.

RT_s = Retention time of the SMC in a field and QC sample or subsequent standard.

RT_c = Mean retention time of the SMC from the most recent initial calibration.

18 Technical Acceptance Criteria

18.1 Each sample within a Batch shall be analyzed on a GC system meeting the initial calibration or valid calibration check standard technical acceptance criteria (paragraphs 8 and 9).

18.2 Each sample within a Batch shall be analyzed after an acceptable method and instrument blank (paragraphs 21 and 22), and after an acceptable LCS (paragraph 23) are analyzed.

18.3 Each sample within a Batch shall be run within a valid initial calibration or daily calibration check analytical sequence that concludes with an acceptable instrument blank (paragraph 22) and an acceptable PVS (paragraph 10).

18.4 Each sample within a Batch shall be analyzed and results reported within the contract required turnaround times.

18.5 Each sample matrix within a Batch shall have an acceptable method blank analyzed during the same analytical sequence.

18.6 The RTS for the SMC RT must be within ± 1.0 percent between any sample in a Batch and the mean RT of the SMC analyzed during the initial calibration. The RTS is not evaluated if the SMC is not recovered in the sample or if peak interferences are present.

18.7 The advisory recovery limit for the SMC is 50-150 percent. Reanalysis of field samples are not made if the SMC recovery is outside the advisory recovery limits. Note: The SMC amount recovered is calculated using the response from the PID detector.

18.8 The SMC recovery must be greater than or equal to 10 percent and less than or equal to 200 percent in order to use RRT for identification purposes. The identification window is ± 0.005 unit of the mean RRT of each target compound from the initial calibration. If the recovery of the SMC is less than 10 percent, greater than 200 percent, or is if peak interferences are present (but is adequately recovered in the method blank), the absolute RT of the compounds shall be used for identification purposes. The identification window is ± 1.0 percent of the mean absolute RT of each target compound from the initial calibration.

19 Corrective Action

19.1 Flag all sample results "S" if the SMC is outside the advisory recovery limits of 50-150 percent.

19.2 Flag all sample results "T" if the absolute RTs are used for identifications.

19.3 An SMC recovery of less than 20 percent in the method blank or LCS associated with a sample Batch is an indication that serious problems have occurred during the analysis. Corrective action shall be performed and the unacceptable method blank and/or LCS and all samples associated with the unacceptable method blank and/or LCS shall be reanalyzed at no additional expense to the Agency.

19.4 If the RTS criterion is not met for any field sample, sample analysis shall be stopped and the noncompliant sample rerun. If the RTS criterion is still out upon reanalysis, analyze an instrument blank. If the instrument blank SMC shift is outside the criterion, perform corrective action which may include a new initial calibration. DO NOT continue with sample analyses until the RTS is within ± 1.0 percent. If the instrument blank SMC shift meets the criterion, sample analyses may continue. The Laboratory shall report both sets of noncompliant sample data and flag the results "M". Note: the RTS is not evaluated if the SMC is not recovered in the sample or if peak interferences are present.

19.5 All target compound concentrations which exceed the upper limit of the initial calibration range will be flagged "E" (see Exhibit B).

NOTE: Unless otherwise stated in Exhibit D, all sample data from the initial analysis shall be reported to the appropriate Region. Samples not meeting any one of the contract technical acceptance criteria and not requiring automatic reanalysis shall be flagged by the Laboratory. The Region will evaluate the noncompliant samples and may specify that these be reanalyzed as additional paid samples.

20 Documentation

Sample results shall be reported on Forms QI-VOA and QVI-VOA. Reporting requirements are listed in Exhibit B.

SECTION V

SAMPLE QUALITY CONTROL PROCEDURES AND REQUIREMENTS

21 Method Blank Analysis

21.1 Summary - A method blank for water and methanol miscible/aqueous miscible oil samples is 2 mL of a reagent water spiked with the SMC. A method blank for soil/solid samples is 1 g of clean quartz sand spiked with the SMC in 2 mL of reagent water. A method blank for methanol non-miscible and methanol miscible/aqueous non-miscible oil samples is 6 g of clean corn oil prepared and added to 2 mL of reagent water spiked with the SMC. A method blank spiked with methanol and 4 µL of SMC shall also be prepared when soil/solid samples from the Batch are extracted with methanol and diluted in reagent water. Method blanks shall be carried through the entire analytical procedure (paragraphs 13 and 14).

21.2 Frequency

A method blank analysis shall be performed for each matrix type (water, soil/solid, or oil), with each set of samples, and whenever soil/solid samples are extracted with methanol and diluted in reagent water. A set of samples is defined as those samples from one Batch that are analyzed on one instrument during a 24-hour analytical sequence.

21.2.1 The method blank and all associated samples shall be analyzed in the same analytical sequence. If samples from a batch are analyzed in more than one analytical sequence, the associated method blank must also be analyzed in the same analytical sequence.

21.2.2 An acceptable method blank shall be analyzed before running any samples within an analytical sequence.

21.2.3 Criteria for an acceptable method blank are defined in paragraph 21.4.

21.3 Procedure for Method Blank Preparation

21.3.1 Prepare the method blanks at the frequency listed in paragraph 21.2.

21.3.2 Measure out 2 mL of reagent water for each water and methanol miscible/aqueous miscible oil method blank sample aliquot into a 5-mL headspace vial. Spike with 4 µL of the SMC (50 µg/mL) and immediately cap.

21.3.3 Soil/solid method blanks are 1 g of clean quartz sand spiked with 4 µL of the SMC (50 µg/mL) in 2 mL of reagent water in

a 5-mL headspace vial and vortexed, as described in paragraph 13.3. Proceed with the analysis procedure described in paragraph 14.

21.3.4 Methanol non-miscible and methanol miscible/aqueous non-miscible oil method blanks are 6 g of clean corn oil prepared as described in paragraph 13.4. Proceed with the analysis procedure described in paragraph 14.

21.3.5 Method blanks spiked with methanol shall be prepared whenever soil/solid samples are extracted with methanol and diluted into reagent water. Spike the same amount of methanol that was used for soil/solid sample dilution into 2 mL of reagent water spiked with 4 µL of the SMC (50 µg/mL). If more than one sample in the Batch is extracted with methanol, the amount of methanol used for the method blank shall be the greatest amount used for soil/solid sample dilution.

21.4 Technical Acceptance Criteria

21.4.1 All method blanks shall be analyzed within an acceptable analytical sequence on a GC system meeting the initial three-point calibration or a valid calibration check standard criteria (paragraphs 8 and 9), and the PVS acceptance criteria (paragraph 10).

21.4.2 The RTS for the SMC in the method blank must be within ± 1.0 percent between the blank and the mean SMC RT calculated from the initial calibration.

21.4.3 The SMC recovery criterion of 50-150 percent is advisory only. The SMC recovery in the method blank must, however, be greater than or equal to 20 percent and less than or equal to 200 percent.

21.4.4 The target compounds or potential interferences in the method blanks must have a response less than one-half the response in the corresponding RRT window of the initial calibration low concentration standard.

21.4.5 A method blank may contain a detectable but acceptable concentration of a target compound (less than one-half the response of the initial calibration low concentration standard).

21.4.6 If all criteria are satisfied, the method blank analysis is acceptable and samples may be analyzed. If the method blank is unacceptable, corrective action shall be taken and an

acceptable method blank must be analyzed prior to analyzing the associated samples.

21.5 Corrective Action

21.5.1 If a method blank does not meet the technical acceptance criteria, the Contractor shall consider the analytical system to be out of control. It is the Contractor's responsibility to eliminate method interferences caused by contaminants in solvents, reagents, glassware, and other sample storage and processing hardware that lead to discrete artifacts and/or elevated baselines in gas chromatograms. If contamination is a problem, the source of the contamination shall be investigated and appropriate corrective measures shall be taken and documented before further sample analysis proceeds.

21.5.2 If a compound is found in the method blank (less than one-half the response in the corresponding RRT window of the initial calibration low concentration standard) and is also detected in an associated field sample at less than the CRQL, the compound shall be reported as a nondetect, i.e., with a "U" flag.

21.5.3 If the SMC recovery in the method blank is less than 20 percent, greater than 200 percent, or if peak interferences are present, another method blank shall be immediately analyzed. If on reanalysis the method blank SMC recovery is still outside the the recovery limits, the method blank and all associated samples shall be reanalyzed at no additional cost to the Agency.

21.5.4 Flag all method blank results "S" if the SMC does not meet the advisory recovery criterion of 50-150 percent.

21.5.5 If the RTS criterion is not met for a method blank, sample analyses shall be stopped and another method blank shall be analyzed. If the RTS criterion is still out on reanalysis, perform corrective action which may include a new initial calibration. DO NOT continue with sample analyses until the RTS is within ± 1.0 percent.

21.5.6 Any samples processed with a method blank that is out of control (i.e., does not meet any of the technical acceptance criteria) shall be reextracted and/or reanalyzed at no additional expense to the Agency.

21.6 Documentation

Method blank results are reported on Forms QI-VOA and QVI-VOA. Reporting requirements are listed in Exhibit B.

22 Instrument Blank Analysis

22.1 Summary

An instrument blank is 2 mL of reagent water spiked with 4 µL of SMC stock solution (50 µg/mL). At least two (2) acceptable instrument blanks shall be analyzed within an analytical sequence - one before sample analyses and one following sample analyses.

22.2 Frequency

An instrument blank shall be analyzed at least twice during the analytical sequence to ensure that the instrument is free from potential contaminants. The first instrument blank analysis shall be performed after the initial three-point calibration in the initial calibration analytical sequence or as the first analysis in a daily calibration check analytical sequence. The second instrument blank analysis shall be performed immediately before the PVS analysis. The Laboratory is encouraged to run additional instrument blanks during the analytical sequence, especially when highly contaminated or complex samples are analyzed. Instrument blanks must be analyzed after analysis of samples with high levels of target compounds or interferents (see paragraph 22.5.6).

22.3 Procedure for Instrument Blank preparation

A instrument blank is 2 mL of reagent water spiked with 4 µL of SMC stock solution (50 µg/mL).

22.4 Calculations

Concentrations of the SMC and any target compounds in the instrument blank are calculated according to the procedures described in paragraph 17. Note: The target compound concentrations (detected concentrations and CRQL values) in the instrument blank shall be reported in the appropriate concentration units (e.g., report in µg/L if the associated samples are water and in µg/Kg if the associated samples are soil).

22.5 Technical Acceptance Criteria

22.5.1 A minimum of two instrument blanks shall be analyzed during an analytical sequence on a GC system meeting the initial three-point calibration or valid calibration check standard criteria (paragraphs 8 and 9), and the PVS acceptance criteria (paragraph 10).

22.5.2 The RTS for the SMC in the instrument blank must be within ± 1.0 percent of the mean SMC RT calculated from the initial calibration.

22.5.3 The SMC recovery criterion of 50-150 percent is advisory only. The SMC recovery in the instrument blank must, however, be greater than or equal to 20 percent or less than or equal to 200 percent.

22.5.4 The target compounds or potential interferences in the first instrument blank (analyzed immediately after the initial calibration or before a valid calibration check) must have a response less than one-half the response in the corresponding RRT windows of the initial calibration low level standard.

22.5.5 Subsequent instrument blanks are acceptable with low level contamination. These instrument blanks may contain target compound concentrations up to twice the CRQL (2x CRQL).

22.5.6 Following the analysis of a field sample containing high levels of target compounds or interferents, an instrument blank shall be analyzed and must meet acceptance criteria before following with sample analyses. If an autosampler is utilized then the field samples run after a high level sample must be carefully evaluated for carryover. The field sample immediately following the high level sample shall be reanalyzed along with any other samples analyzed after the high level sample which shows evidence of carryover.

23.5.7 High level samples are defined as being field samples that contain target compounds at concentration levels that exceed twice the high calibration standard concentration and/or interferents that are detected at levels greater than the mid level initial calibration standard concentration response of the nearest target compound.

22.6 Corrective Action

22.6.1 All groups of samples analyzed shall be bracketed with two acceptable instrument blanks. If either instrument blank is unacceptable, corrective action shall be taken and all samples not bracketed by two valid instrument blanks shall be reanalyzed at no additional expense to the Agency.

22.6.2 If any target compound in an instrument blank analyzed after the initial calibration or before a valid calibration check standard is greater than or equal to one-half the response in the corresponding RRT window of the initial calibration low concentration standard, corrective action shall be

performed, and the system shall be demonstrated to be clean by the analysis of additional instrument blanks until all target compounds are within QC limits.

22.6.3 If any target compound in an instrument blank analyzed after field/QC sample analyses is greater than two times the CRQL, another instrument blank shall be analyzed. If on reanalysis, contamination still exceeds the criterion, corrective action shall be performed and the system demonstrated to be clean. Then, all associated field/QC samples analyzed since the last valid instrument blank or method blank which contain those target compounds or interferents found in the instrument blank at levels greater than twice the CRQL shall be rerun.

22.6.4 If an instrument blank (other than the first instrument blank in the analytical sequence) contains target compounds or interferents between one-half response and two times the CRQL, all positive results (results greater than or equal to the CRQL) for those compounds in samples analyzed after the last valid instrument blank shall be flagged with a "B".

22.6.5 Flag all instrument blank results "S" if the instrument blank SMC does not meet the advisory recovery of 50-150 percent.

22.6.6 If the instrument blank SMC recovery is less than 20 percent, greater than 200 percent, or if peak interferences are present, sample analyses shall be stopped, corrective action performed, and another instrument blank shall be analyzed. If the SMC is still out on reanalysis, corrective action which may include a new initial calibration shall be performed. All samples analyzed since the last valid method or instrument blank shall be reanalyzed after a valid instrument blank has been demonstrated.

22.6.7 If the RTS criterion is not met for an instrument blank, sample analyses shall be stopped and another instrument blank shall be analyzed. If the RTS criterion is still out on reanalysis, corrective action which may include a new initial calibration shall be performed. DO NOT continue with sample analyses until the RTS is within ± 1.0 percent.

22.6.8 Any samples not bracketed by valid instument blanks or a valid instrument blank and a method blank and shall be reanalyzed at no additional expense to the Agency.

22.7 Documentation

Instrument blank results are reported on Forms QI-VOA and QVI-VOA. Reporting requirements are listed in Exhibit B.

23 Laboratory Control Samples

23.1 Summary

The QTM VOA LCS mixture initially will be supplied to contractors by the Agency. The LCS mixture will contain target compounds at several known concentrations. The Laboratory shall spike the LCS mixture into a clean matrix that is similar to the samples being analyzed. The spiked matrix shall be prepared and analyzed using the procedures described for field samples. Analysis of the LCS will assess the performance of the analytical system prior to analyzing field samples.

23.2 Frequency

An LCS shall be analyzed once per matrix per analytical sequence (24 hours) per instrument. The LCS shall be analyzed after the first instrument blank in the initial calibration analytical sequence or after the method blank in the daily calibration analytical sequence.

An LCS shall be analyzed with each:

- Set of water field samples (LCS prepared from reagent water);
- Set of soil/solid field samples (LCS prepared with quartz sand); and
- Set of oily field samples (LCS prepared with corn oil).

23.3 Procedure

Spike the appropriate matrix with the LCS standard mixture and prepare as follows:

23.3.1 Water LCS and Methanol Miscible/Aqueous Miscible Oil LCS

23.3.1.1 Allow the LCS mixture ampules to reach room temperature before opening. The ampules must not be opened until preparation/analysis is to occur. Exercise care in breaking the ampules open to avoid injury.

23.3.1.2 Spike 2 mL of the clean reagent water matrix with 10 µL of the LCS standard mixture as described in the instructions provided with the LCS mixtures. Use syringes to perform the spiking to ensure accuracy.

Prepare as described in paragraph 13.2.2 and proceed with the analysis as described in paragraph 14.

23.3.1.3 Nominal aqueous LCS target compound concentrations are as follows:

Vinyl chloride	60 µg/L
1,1-Dichloroethene	380 µg/L
cis-1,2-Dichloroethene	375 µg/L
1,1,1-Trichloroethane	500 µg/L
Trichloroethene	40 µg/L
Bromoform	500 µg/L
Ethyl benzene	60 µg/L
m-Xylene	375 µg/L

23.3.2 Soil LCS

23.3.2.1 Allow the LCS mixture ampules to reach room temperature before opening. The ampules must not be opened until preparation/analysis is to occur. Exercise care in breaking the ampules open to avoid injury.

23.3.2.2 Spike 1 g of the clean quartz sand matrix with 10 µL of the LCS standard mixture as described in the instructions provided with the LCS mixtures. Use syringes to perform the spiking to ensure accuracy. Prepare as described in paragraph 13.3.2 - 13.3.3 and proceed with the analysis as described in paragraph 14.

23.3.2.3 Nominal LCS target compound concentrations are as follows:

Vinyl chloride	120 µg/kg
1,1-Dichloroethene	760 µg/kg
cis-1,2-Dichloroethene	750 µg/kg
1,1,1-Trichloroethane	1000 µg/kg
Trichloroethene	80 µg/kg
Bromoform	1000 µg/kg
Ethyl benzene	120 µg/kg
m-Xylene	750 µg/kg

23.3.3 Oil LCS (Methanol Non-Miscible and Methanol Miscible/Aqueous Non-Miscible)

This section has not been finalized. The LCS composition and concentrations for oils are currently being investigated.

23.3.3.1 Allow the LCS mixture ampules to reach room temperature before opening. The ampules must not be opened until preparation/analysis is to occur. Exercise care in breaking the ampules open to avoid injury.

23.3.3.2 Spike 6 g of the clean corn oil matrix with ????600 µL???? of the LCS standard mixture as described in the instructions provided with the LCS mixtures. Use syringes to perform the spiking to ensure accuracy. Prepare as described in paragraph 13.4.1.2 - 13.4.1.5 and proceed with the analysis as described in paragraph 14.

23.3.3.3 Nominal LCS target compound concentrations are as follows:

Vinyl chloride	1200 µg/kg
1,1-Dichloroethene	7600 µg/kg
cis-1,2-Dichloroethene	7500 µg/kg
1,1,1-Trichloroethane	10000 µg/kg
Trichloroethene	800 µg/kg
Bromoform	10000 µg/kg
Ethyl benzene	1200 µg/kg
m-Xylene	7500 µg/kg

23.4 Technical Acceptance Criteria

23.4.1 All LCS compounds must have recoveries between 30 and 110 percent. Up to two LCS compounds may, however, exceed the upper recovery criterion of 110 percent.

23.4.2 All LCS target compound absolute and relative retention times must be within the windows established during the initial calibration.

23.4.3 The RT of the SMC must be within ± 1.0 percent of the mean RT of the SMC established during the initial calibration.

23.4.4 The SMC advisory recovery criterion is 50-150 percent. The SMC recovery in the LCS must, however, be greater than or equal to 20 percent and less than or equal to 200 percent.

23.5 Corrective Action

23.5.1 If any LCS compound recovery is less than 30 percent or more than two LCS compounds exceed 110 percent, another LCS shall be analyzed. If, upon reanalysis, more than two LCS target compounds are outside the recovery criterion, the LCS and

all associated field and QC samples shall be reextracted and/or reanalyzed. If one or two LCS compounds are outside the recovery criterion, proceed with sample analyses, and flag all sample results of those compounds that were out in the LCS with an "L" flag.

23.5.2 If the recovery of the SMC is less than 20 percent, greater than 200 percent, or if peak interferences are present in the LCS, sample analysis shall be stopped and another LCS shall be analyzed. If the LCS SMC recovery is still outside the criterion upon reanalysis, corrective action shall be performed and the LCS and all associated samples shall be reextracted and/or reanalyzed.

23.5.3 If the RT or RRT for any LCS compound is not within the RT and RRT windows established during the initial calibration, reanalyze another LCS. If upon reanalysis a compound is still outside the windows, a new initial calibration must be performed before samples can be analyzed. The instrument must be recalibrated as described in paragraph 8.

23.5.4 If the RTS criterion is not met for the LCS, sample analysis shall be stopped and another shall be LCS reanalyzed. If the RTS is still outside the criterion upon reanalysis, corrective action which may include a new initial calibration shall be performed. DO NOT proceed with sample analyses until the RTS is within ± 1.0 percent.

23.5.5 Any samples processed with an LCS that is out of control (i.e., does not meet any of the technical acceptance criteria) shall be reextracted and/or reanalyzed at no additional expense to the Agency.

23.6 Documentation

Laboratory Control Sample results are reported on Forms QI-VOA, QII-VOA, and QVI-VOA. Reporting requirements are listed in Exhibit B

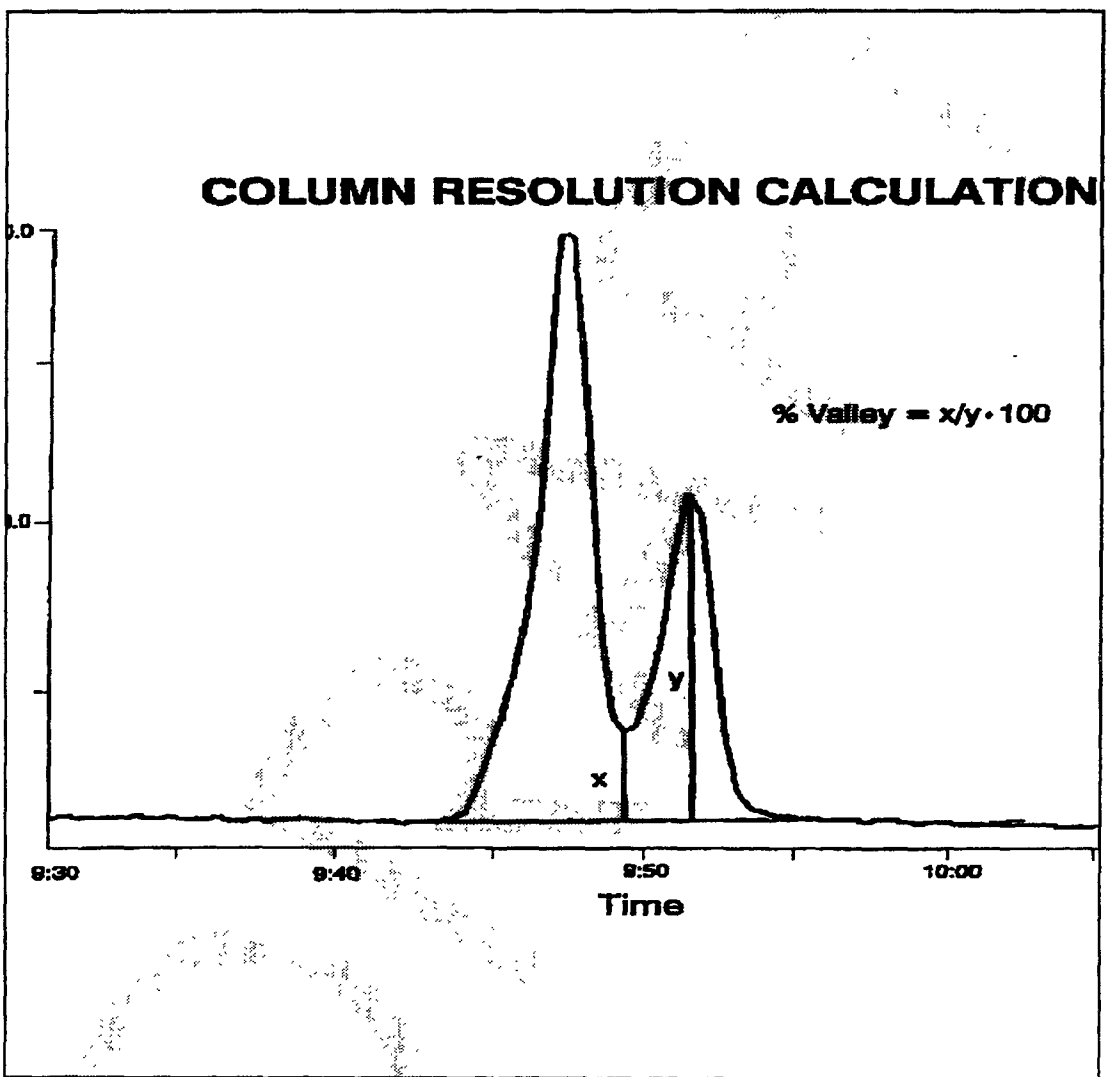
COLUMN RESOLUTION CALCULATION
% Valley = x/y · 100
x
y
9:30
9:40
9:50
10:00
Time

Figure 1

Table 1.

List of Volatile Compounds in Order of Elution*

Vinyl chloride
1,1-Dichloroethene
trans-1,2-Dichloroethene
1,1-Dichloroethane
cis-1,2-Dichloroethene
Chloroform
1,1,1-Trichloroethane
Carbon tetrachloride
Benzene
1,2-Dichloroethane
Trichloroethene
Bromodichloromethane
Toluene
Tetrachloroethene
Chlorobenzene
1,1,2,2,-Tetrachloroethane
Ethyl benzene
para-Xylene**
meta-Xylene**
ortho-Xylene
Bromoform
4-Bromofluorobenzene (SMC)

* This elution order is given as general guidance and is based on suggested instrumental operating conditions as given in paragraph 7.

** Para-Xylene coelutes with meta-Xylene. The sum of both Xylenes will be measured and will be quantitated using the calibration factor of the para isomer.

EXHIBIT D

QUICK TURNAROUND METHODS

ANALYTICAL METHOD FOR POLYNUCLEAR AROMATIC HYDROCARBONS (PAHs)

TABLE OF CONTENTS
POLYNUCLEAR AROMATIC HYDROCARBONS

SECTION		Page
I	Introduction	D-3
II	Sample/Extract Storage and Turnaround Times and Equipment and Standards	D-4
	1 Sample/Extract Storage and Turnaround Times	D-4
	2 Summary of Method	D-4
	3 Interferences	D-5
	4 Apparatus and Materials	D-6
	5 Reagents	D-8
	6 Standards	D-8
III	Instrument Quality Control Procedures and Requirements	D-12
	7 Instrument Operating Conditions	D-12
	8 Calibration of the GC System - Initial Calibration	D-12
	9 Calibration of the GC System - Calibration Check	D-17
	10 Calibration of the GC System - PVS	D-20
	11 System Performance - GC Resolution	D-23
IV	Sample Analysis and Compound Identification and Quantitation	D-26
	12 Summary	D-26
	13 Procedure	D-26
	14 Extract Cleanup	D-31
	15 Instrumental Analysis	D-32
	16 Dilutions	D-35
	17 Identification of Target Compounds	D-35
	18 Calculations	D-37
	19 Technical Acceptance Criteria	D-39
	20 Corrective Action	D-40
	21 Documentation	D-41
V	Sample Quality Control Procedures and Requirements	D-42
	22 Method Blank Analysis	D-42
	23 Instrument Blank Analysis	D-45
	24 Laboratory Control Samples	D-48

SECTION I

INTRODUCTION

This Quick Turnaround Method (QTM) is designed for use in determining the concentration of various polynuclear aromatic hydrocarbon (PAH) compounds in soil/solid, water, oil, and wipe samples. Exhibit C lists the compounds that will be determined by this method along with the Contract Required Quantitation Limits (CRQLs). The method yields identification and quantitation of the analytes listed in Exhibit C using single column gas chromatography/flame ionization detector (GC/FID). Target compound concentrations in samples are reported on an "as-received" basis; no dry weights are calculated. The primary objective of this QTM is to provide analytical data in a timely manner for decision-making during Site Inspections, remediations, and emergency removal activities. The PAH QTM is to be used when rapid data turnaround is required, when the data requestor knows of (or strongly suspects) the presence of PAH contamination, and there is knowledge regarding potential matrix interferences at the site. The QTM is not equivalent to, nor a replacement for, the CLP Organics Multi-Media Multi-Concentration Analysis.

SECTION II

SAMPLE/EXTRACT STORAGE AND TURNAROUND TIMES AND EQUIPMENT AND STANDARDS

1 Sample/Extract Storage and Turnaround Times

1.1 Procedures for Sample Storage

Samples shall be protected from light and refrigerated at 4°C (± 2°C) from the time of receipt until 60 days after delivery of a complete data package to the Agency.

1.2 Procedure for Sample Extract Storage

Sample extracts shall be protected from light and stored at 4°C (± 2°C) for 21 days after delivery of a complete data package to the Agency.

Samples, sample extracts, and standards must be stored separately.

1.3 Contract Required Sample Turnaround Times

Samples shall be extracted, analyzed, and a summary of the analytical and QC data shall be reported to the appropriate EPA Region via telecommunications network within 48 hours (or 72 hours if more than three fractions are analyzed) of Validated Time of Sample Receipt (VTSR). See Exhibits A and B for specific instructions concerning sample turnaround time and data reporting requirements.

2 Summary of Method

2.1 This analytical method is a GC/FID method for the analysis of polynuclear aromatic hydrocarbons (PAHs) in water, soil/solid, oil, and wipe samples. All target compounds and the System Monitor Compound (SMC) shall be solvent extracted from field and QC samples followed by silica-gel column clean-up.

2.2 Sample analyses shall be performed using gas chromatographic techniques within a contract specified analytical sequence that shall not exceed 24 hours. Target compounds are identified and quantitated on the basis of retention time windows and calibration factors established during initial calibration. During initial calibration, a mean relative retention time ($\overline{RRT}$), a mean retention time ($\overline{RT}$), and an identification window (± 0.008 RRT unit of the mean RRT or ± 1.0 percent of the mean RT) are established for each compound. Mean calibration factors are also established during the initial calibration and the percent relative standard deviation (%RSD) of the calibration factors for each target compound and the SMC must be less than or equal to 25.0 percent. Sample

compound concentrations are calculated from the initial calibration using the average of the three calibration factors, using the mid point calibration factor (if it is within ± 10 percent of the average of the high and low calibration factors), or using line segments (K Curve).

2.3 A check of the initial calibration shall be performed no less than every 24 hours by the analysis of the mid point standard. All calibration factors calculated from the calibration check standard must be within ± 35.0 percent of the mean calibration factor calculated from the initial calibration for each target compound and the SMC.

2.4 An analytical sequence also includes method blanks and instrument blanks in which no compound can be observed at signals greater than one-half the response in the corresponding RRT window of the initial calibration low concentration standard. The analytical sequence shall also include the analysis of Laboratory Control Samples (LCS) and Performance Verification Standards (PVS). The LCS will be a "go/no-go" analysis. That is, if the LCS meets performance criteria as stated in paragraph 24, sample analyses may proceed. If, however, the LCS does not meet acceptance criteria, corrective action must be taken before sample analyses are performed. The PVS is two times the concentration of the low calibration standard and shall be analyzed at least once during each analytical sequence to verify instrument performance. All samples must be bracketed by valid PVS analyses or a valid initial calibration or a valid calibration check standard and a valid PVS.

2.5 A System Monitor Compound (SMC) shall be added to all field and QC samples and standards. The SMC is used as a retention time marker to calculate RRTs for the identification of target compounds and to assess extraction efficiency. When the recovery of the SMC in a field sample is less than 10 percent, greater than 200 percent, or if peak interferences are present, absolute retention times are used for target compound identification. The SMC recovery criterion of 50-150 percent is advisory only. Reanalyses of samples are not performed if the SMC recovery is outside the advisory recovery limits.

3 <u>Interferences</u>

3.1 A number of interferences may affect quantitative determination of PAH compounds using this method. The FID detector is relatively nonspecific; it will respond to all molecules containing carbon-hydrogen bonds including phthalate esters, phenols, and alkyl (nontarget) PAHs. It is incumbent on the data requestor to establish that PAHs on the Target Compound List (TCL) are the primary extractable contaminant at a site before using this method to establish their concentration.

3.2 The analytical system must be demonstrated to be free from contamination under conditions of the analysis by analyzing method blanks. Cross-contamination problems can be minimized by analyzing instrument blanks

after samples with high levels of target compounds or other interferents (see paragraph 23).

4 Apparatus and Materials

Brand names, suppliers, and part numbers are for illustrative purposes only. No endorsement is implied. Equivalent performance may be achieved using apparatus and materials other than those specified here; however, demonstration of equivalent performance meeting the requirements of this SOW is the responsibility of the Contractor.

4.1 Gas Chromatograph - The gas chromatography (GC) system shall be capable of temperature programming and flow control that is stable throughout an analytical sequence. The system shall be suitable for splitless or on-column injection and have all required accessories, including syringes, analytical columns, and gases. All GC carrier gas lines shall be constructed from stainless steel or copper tubing. Non-polytetrafluoroethylene (PTFE) thread sealants, or flow controllers with rubber components shall not be used.

4.1.1 Gas Chromatography Column - 15 m x 0.53 mm ID bonded phase silicone-coated fused silica capillary column (Supelco SPB-5, J&W DB-5, Restek, or equivalent). A film thickness of 0.25 to 1.0 µm is recommended.

NOTE: The use of a guard column is recommended.

4.1.2 Chromatography Detector - The GC shall be equipped with an FID.

4.2 Data System - The GC shall be linked to a data system capable of integrating peak areas for any compound detected at or above one-half the CRQL, providing retention time labeling, and relative retention time comparison. It is required that the Laboratory be equipped with a PC- or microcomputer-based GC data collection and reduction system for this purpose. The Laboratory shall possess this equipment to provide the quick turnaround of electronic data. The Laboratory shall also be equipped with a microcomputer and contract specified hardware and software to electronically transfer the QTM data to the Regions.

4.3 Glassware - Sufficient glassware to meet contract requirements shall be reserved for exclusive use in support of this contract.

4.3.1 Erlenmeyer Flasks - 125 mL.

4.3.2 Beaker - 150 mL.

4.3.3 Concentrator tubes - 10 mL.

4.3.4 Kimax concentrator tube (graduated) - 25 mL.

4.3.5 Graduated test tubes - graduated from 1 to 10 mL.

4.3.6 Autosampler vials - appropriate for the GC system.

4.3.7 Centrifuge tubes - 40 mL.

4.3.8 Powder funnel - 6 cm (60°).

4.3.9 Chromatography column w/teflon stopcocks - 10 mm i.d. X 20 cm.

4.3.10 Pasteur pipets.

4.3.11 Side-arm flask - 500 mL.

4.3.12 Buchner funnel.

4.4 Laboratory Hardware - The following equipment is required for sample preparation.

4.4.1 Ultrasonic Cell Disrupter - Heat Systems Ultrasonics, Inc. Model W-385 Sonicator (475 watt with pulsing capability, No. 200 1/2" tapped disrupter horn plus No. 419 1/8" standard tapered microtip probe), or equivalent device with a minimum of 375 watt output capability. The 1/8" microtip shall be used for extraction of all soil/solid samples. (NOTE: In order to ensure that sufficient energy is transferred to the sample during the extraction, the microtip probe <u>must</u> be replaced if the tip begins to erode. Erosion of the tip is evidenced by a rough surface.)

4.4.2 Balance - Calibrated and accurate to 0.1 g.

4.4.3 Balance - Calibrated and accurate to 0.1 mg.

4.4.4 Centrifuge.

4.4.5 Microsyringe - 10-µL, 50-µL, and 100-µL.

4.4.6 Spatula - Stainless steel.

4.4.7 Hot plate stirrer.

4.4.8 Teflon coated magnets.

4.4.9 Glass wool.

4.4.10 Whatman #42 filter paper.

4.4.11 Whatman vacuum holder.

4.4.12 Nitrogen blowdown apparatus.

4.4.13 Water bath.

5 Reagents

5.1 Reagent water - Reagent water is defined as water in which target compounds or potentially interfering compounds do not produce a signal greater than one-half the response in the corresponding RRT window of the initial calibration low concentration standard. Reagent water shall be generated by one of the following methods.

5.1.1 Reagent water may be generated by passing tap water through a carbon filter bed containing approximately 500 g of activated carbon (Calgon Corp., Filtrasorb-300, or equivalent).

5.1.2 Reagent water may be generated using a water purification system (Millipore-O-Plus with Organex Q cartridges, or equivalent).

5.1.3 Reagent water may be prepared by boiling for 15 minutes then bubbling contaminant-free inert gas through the water for one hour while maintaining the water temperature at 90°C. While still hot, transfer the degassed water to a narrow-mouth screw-cap bottle, seal with a Teflon-lined septum, and cap.

5.2 Solvents - Acetonitrile, hexane (UV grade), methanol, methylene chloride, acetone (CAP GC grade), and isoctane.

5.3 Sodium hydroxide solution (0.5 N).

5.4 Sulfuric acid solution(0.5 N).

5.5 90:10 Methylene chloride/acetone solution.

5.6 Silica Gel 100-200 mesh grade 923.

5.7 Sodium Sulfate.

5.8 Sodium Chloride.

5.9 Corn oil.

6 Standards

6.1 Stock Standard Solutions

Stock solutions may be prepared from pure standard materials or purchased as certified solutions. Standard solutions shall be prepared by dissolving pure standards in a suitable solvent in volumetric flasks. The addition of Toluene may be necessary to dissolve some of the target

compounds in highly concentrated stock standards. When compound purity is assayed to be 96 percent or greater, the weight may be used without correction to calculate the concentration of the stock standard. Exhibit E, Section V provides further directions for preparing and verifying the integrity of stock standard solutions.

6.2 Secondary Dilution Standards

6.2.1 Using stock standard solutions, prepare secondary dilution standards in methylene chloride.

6.2.2 Secondary dilution standards shall be stored at 4°C (± 2°C) with minimal headspace and checked frequently for signs of degradation or evaporation. These procedures are important, especially just prior to preparing calibration standards from the dilution standards.

NOTE: Standards shall not be stored in volumetric flasks, especially when they are prepared with solvents with low boiling points.

6.3 Calibration Standards

6.3.1 Calibration standard mixtures shall be prepared at three concentration levels in volumetric flasks and diluted to final volume with hexane. The low concentration standard as specified in paragraph 6.3.2, achieves the sample extract compound concentrations equivalent to the sample compound CRQLs as listed in Exhibit C (see paragraph 14.9). The high concentration level shall be near the upper end of the linear range. The compounds and concentrations used for these calibration mixtures are presented in paragraph 6.3.2. NOTE: The high level standard concentrations are the minimum required under this method. The Laboratory may prepare standards at higher concentration levels as long as the %RSD criteria are met.

6.3.2 PAH calibration standard mix concentrations.

Calibration Ranges (µg/mL)

Compound	Low	Mid	High
Naphthalene	2.0	20	100
Acenaphthylene	2.0	20	100
Acenaphthene	2.0	20	100
Fluorene	2.0	20	100
Phenanthrene	2.0	20	100
Anthracene	2.0	20	100
Fluoranthene	2.0	20	100
Pyrene	2.0	20	100
Benz(a)anthracene	2.0	20	100
Chrysene	2.0	20	100
Benzo(b)fluoranthene *	2.0	20	100
Benzo(a)pyrene	2.0	20	100
Indeno(1,2,3-cd)pyrene	2.0	20	100
Dibenz(a,h)anthracene	2.0	20	100
Benzo(g,h,i)perylene	2.0	20	100
2-Bromonaphthalene (SMC)	2.0	20	100

* Coelutes with benzo(k)fluoranthene, quantitate the total in terms of the b isomer.

6.3.3 All standards shall be stored at 4°C (± 2°C) in Teflon-sealed glass bottles. Calibration solutions shall be replaced after 6 months, or sooner, if comparison with check standards indicates a problem.

6.4 Calibration Check Standard

The calibration check is a daily one-point check on the initial calibration. The calibration check standard shall be prepared in a volumetric flask and diluted to final volume with hexane. The concentration of the calibration check standard is the same as the mid level standard used in the initial calibration.

6.5 System Monitor Compound

The System Monitor Compound (SMC), 2-Bromonaphthalene, shall be employed to detect shifts in retention time of eluting compounds. Additionally, the same compound shall be used to monitor the extraction efficiency. The Laboratory shall prepare a solution in methanol containing 2-Bromonaphthalene at a concentration of 2 mg/mL. The Laboratory shall add 10 µL of this standard to a 100-mL water sample, or 10 µL to 6 g of soil/solid sample. For oil analysis, prepare 2-Bromonaphthalene at a concentration of 200 µg/mL and add 1 mL of this solution to 1 g of oil sample.

6.6 Performance Verification Standard

The Performance Verification Standard (PVS) shall be analyzed at least once during each analytical sequence to assess system stability. The PVS is two times the concentration of the low level calibration standard.

6.7 Laboratory Control Sample

Laboratory Control Samples (LCS) containing known amounts of target compounds traceable to primary standards will initially be supplied by the Agency. Following receipt of these initial supplies, however, the Laboratory shall prepare its own LCS standards. The LCS shall be spiked into a clean matrix and prepared using all steps of this protocol. An appropriate amount of the LCS shall be added to reagent water and analyzed with each Batch of water samples. An appropriate amount of the LCS shall be added to clean quartz sand and analyzed with each Batch of soil/solid samples. An appropriate amount of the LCS shall be added to clean corn oil and analyzed with each Batch of oil samples. If a Batch contains water, soil/solid, and oil samples, an LCS shall be prepared and analyzed for each matrix. (Note: The Agency will provide the laboratory with further instructions for the preparation and analysis of LCSs for wipe samples.) All LCS compounds must have recoveries between 30 and 130 percent before sample analysis may begin (see paragraph 24).

NOTE: The Laboratory is expected to maintain control charts of the recoveries of at least three representative LCS compounds as an internal QC procedure.

6.8 Storage of Standard Solutions

6.8.1 Stock, secondary standard solutions, and working standard solutions shall be stored at 4°C (± 2°C) in Teflon-lined screw-cap amber bottles (also see paragraph 6.3.3).

6.8.2 All standards shall be protected from light.

6.8.3 Samples, sample extracts, and standards shall be stored separately.

SECTION III

INSTRUMENT QUALITY CONTROL PROCEDURES AND REQUIREMENTS

7 Instrument Operating Conditions

The following are the suggested gas chromatographic analytical conditions.

Column: J&W DB-5 (or equivalent), 15 m x 0.53 mm ID, 0.25 to 1.0 µm film thickness fused silica capillary columns (FSCC).

Carrier Gas:	Helium
Flow Rate:	5-7 mL/min
Injector Temperature:	250°C
Detector Temperature (FID):	300°C
Initial Temperature:	75°C
Initial Hold Time:	3 min
Ramp Rate:	12°C/min
Final Temperature:	280°C
Final Hold Time:	5 min

The FID requires hydrogen and air supplied to the detector according to manufacturer's specifications.

NOTE: The typical run time under these conditions is 25 minutes. It may be necessary to adjust GC conditions on individual instruments to optimize compound separation. It may be necessary to adjust detector conditions to optimize instrument sensitivity.

8 Calibration of the GC System - Initial Calibration

8.1 Summary

8.1.1 Prior to the analysis of samples and required blanks, each GC system must be initially calibrated to ensure that the instrument meets the minimum performance requirements of the method. The initial calibration is accomplished by analyzing three standards; the low level, mid level, and high level mixtures as specified in paragraph 6.3.2. The technical acceptance criteria for the initial calibration are given in paragraph 8.5. The initial calibration shall be used to establish the calibration factors used for compound quantitation, to define the retention time windows for compound identification, and to determine the mean SMC retention time for evaluating SMC RT shifts during analyses. Detector response must be linear for all target compounds. All samples shall be analyzed during the contract specified 24-hour analytical sequence.

8.1.2 Sample quantitation shall be based on the mean compound calibration factor, line segments ("K" curve), or the mid level calibration factor from the initial calibration (The use of the line segment or "K" curve is suggested). All field and QC samples and standards within a Batch and all field and QC samples and standards analyzed in the same analytical sequence shall be quantitated using the same quantitation method.

8.1.3 Compound identification shall be based on RRT windows established during initial calibration in all field samples where the SMC recovery is greater than or equal to 10 percent and less than or equal to 200 percent.

8.1.4 Compound identification shall be based on absolute retention time windows established during initial calibration in all field samples where the SMC recovery is less than 10 percent, greater than 200 percent, or if peak interference are present.

8.1.5 Shifts in the chromatographic peaks shall be evaluated by comparing the RT of the SMC in all analyses with the mean RT of the SMC calculated from the initial calibration. The retention time shift is referred to as RTS or RT %D (see paragraph 18.4.1). The RT of the SMC for field and QC sample analyses must be within ± 1.0 percent of the mean RT calculated from the initial calibration.

8.2 Frequency

8.2.1 An initial three-point calibration shall be performed to determine the linearity of response of all target compounds and the SMC. A new initial calibration is required whenever calibration check standards or performance verification standards cannot satisfy QC criteria. A new initial calibration shall also be performed whenever major instrument maintenance has been performed such as column or detector replacement. An initial calibration must be performed for each GC and for each chromatographic column which are used to perform these analyses.

8.2.2 An analytical sequence is a contractually defined sequence of GC analyses which consists of an initial three-point calibration or a valid calibration check, field samples, LCS, method and instrument blanks, PVS, and other QC samples run within a 24-hour period (see paragraph 15 for the required sequence of samples).

8.2.3 Analysis of the initial calibration shall begin with the injection of the high level standard followed by the mid level and low level standards.

8.2.4 The analytical sequence concludes with an acceptable analysis of an instrument blank and a PVS (see paragraph 10).

8.2.5 Samples shall be analyzed only after meeting the technical acceptance criteria for the initial calibration or a valid calibration check standard.

8.3 Procedure

8.3.1 The GC system shall be set up per the requirements of paragraph 7.

8.3.2 Prepare calibration standard solutions containing the SMC and all target compounds using the procedure listed in paragraph 6.3.

8.3.3 The calibration solutions shall be equilibrated to ambient temperature before injection (approximately 1 hour).

8.3.4 Inject between 1 and 5 µL of each calibration standard. The same injection volume shall be used for all calibrations and field/QC sample analyses.

8.4 Calculations

8.4.1 Calculate the calibration factor (ratio of the total peak area or height to the mass injected) for each target compound and SMC in the three initial calibration standard analyses using equation D.1 (EQ. D.1).

$$\textit{Calibration Factor} = \frac{\textit{Total Area of Peak or Peak Height}}{\textit{Mass injected (ng)}} \qquad \text{EQ. D.1}$$

8.4.2 Calculate the mean calibration factor for each target compound and the SMC.

8.4.3 Calculate the %RSD of the calibration factors of the low level, mid level, and high level standards for the initial calibration using the following equation.

$$\%RSD = \frac{SD}{\bar{x}} \times 100 \qquad \text{EQ. D.2}$$

where SD = standard deviation.

Standard deviation is calculated using the following equation:

$$SD = \sqrt{\sum_{i=1}^{N} \frac{(x_i - \bar{x})^2}{N - 1}} \qquad \text{EQ. D.3}$$

where: x_i = individual calibration factor (per compound).

$\bar{x}$ = mean of three initial calibration factors (per compound).

N = number of calibration standards.

Equation D.4 is the general formula for the mean of a set of values.

$$\bar{X} = \sum_{i=1}^{N} \frac{X_i}{N} \qquad \text{EQ. D.4}$$

where: $\bar{X}$ = mean of values.

X_i = value.

N = number of values.

8.4.4 Calculate the RRT for each target compound using the following equation:

$$RRT = \frac{RT_{component}}{RT_{SMC}} \qquad \text{EQ. D.5}$$

8.4.5 Calculate the mean RRT and RT for each target compound by using equation D.4.

8.5 Technical Acceptance Criteria

8.5.1 The %RSD of the calibration factor for each target compound and the SMC in the initial calibration must be less than or equal to 25.0 percent. Up to two target compounds may exceed 25.0 percent RSD, however, all compounds must be less than or equal to 40.0 percent RSD.

8.5.2 The retention time of the SMC in each standard must be within ± 1.0 percent of the mean retention time calculated from the three initial calibration standards.

8.5.3 The peak resolution between phenanthrene and anthracene, and between indeno(1,2,3-cd)pyrene and dibenz(a,h)anthracene shall be evaluated in the low level initial calibration standard before proceeding with sample analyses (see paragraph 11 System Performance - GC Resolution).

8.5.4 The chromatographic peak response for all target compounds in the low concentration standard must be greater than 10 percent of full-scale deflection.

8.6 Corrective Action

8.6.1 If the %RSD for more than two compounds in the initial calibration is greater than 25.0 percent or if any compound exceeds 40.0 percent RSD, the instrument has not demonstrated adequate linearity to be used for this method. Corrective action shall be taken and documented.

8.6.2 If the peak resolution criterion is not met, the Laboratory shall perform corrective action and demonstrate adequate resolution before samples can be analyzed.

8.6.3 If the SMC RT is not within ± 1.0 percent of the mean SMC RT calculated from the three initial calibration standards, the Laboratory shall perform corrective action which may include a new initial calibration. DO NOT proceed with sample analysis until the RTS is within ± 1.0 percent.

8.6.4 If the peak response for any target compound in the low concentration standard is not greater than 10 percent of full-scale deflection, the Laboratory shall perform corrective action and make appropriate adjustments before sample analyses are started, to ensure that all target compound peak responses in the low concentration standard are greater than 10 percent of full-scale deflection.

8.6.5 Corrective action may include optimizing FID detector linearity by adjusting gas flows. Actions also may include replacing the GC injector liner, column, or the pre-column, removing 0.5 - 1 m of the analytical column, or replacing the standards.

8.6.6 All initial calibration technical acceptance criteria shall be met before any samples or required blanks are analyzed. Any samples or required blanks analyzed when the initial calibration criteria have not been met shall require reanalysis at no additional cost to the Agency.

8.7 Documentation

Initial calibration results are reported on Forms QIVA-PAH, QIVB-PAH, and QVI-PAH. Reporting requirements are listed in Exhibit B.

9 Calibration of the GC System - Calibration Check

9.1 Summary

A check of the calibration curve shall be performed at the beginning of every 24-hour analytical sequence that includes field sample analyses. This check of the calibration shall be performed using the mid level standard and shall contain all target compounds and the SMC. The percent difference (%D) between the calibration factor in the calibration check standard and the average calibration factor from the initial calibration is calculated for each target compound and the SMC, and must meet the technical acceptance criteria given in paragraph 9.5. The SMC retention time shift (RTS) and column resolution must also meet technical acceptance criteria as stated in paragraph 9.5 and paragraph 11, respectively. Only after all these criteria are met can sample analysis begin.

NOTE: Compound identification and quantitation shall be performed based on calibration factors and compound RT and RRT windows established during the initial calibration.

9.2 Frequency

9.2.1 Each GC used for analysis shall be checked to verify the initial calibration for each 24-hour period of operation. This procedure is to ensure that the instrument continues to meet the instrument sensitivity and linearity requirements of this method.

9.2.2 An analytical sequence is a contractually-defined sequence of GC analyses which consists of an initial three-point calibration or a valid calibration check standard, field samples, LCS, method and instrument blanks, PVSs, and other QC samples run within a 24-hour period (see paragraph 15).

9.2.3 The analytical sequence shall be concluded with an acceptable analysis of an instrument blank and a PVS (see paragraph 10).

9.2.4 Samples shall be analyzed only after meeting the technical acceptance criteria for the initial calibration or a valid calibration check standard.

9.3 Procedure

9.3.1 The GC system shall be set up per the requirements of paragraph 7.

9.3.2 Prepare calibration check standard solutions containing the SMC and all target compounds using the procedures listed in paragraphs 6.3 and 6.4.

9.3.3 The calibration solutions shall be equilibrated to ambient temperature before injection (approximately 1 hour).

9.3.4 Inject between 1 and 5 μL of the mid level calibration standard. The same injection volume shall be used for all calibrations and field/QC sample analyses.

9.4 Calculations

9.4.1 Calculate the calibration factor (ratio of the total peak area or height to the mass injected) for each target compound and the SMC in the calibration check standard mix using the following equation.

$$\textit{Calibration Factor} = \frac{\textit{Total Area of Peak or Peak Height}}{\textit{Mass injected (ng)}} \qquad \text{EQ. D.6}$$

9.4.2 Calculate the %D between the calibration factors from the calibration check standard and the average calibration factors from the initial calibration using the following equation.

$$\%D = \frac{\bar{x} - x_c}{\bar{x}} \times 100 \qquad \text{EQ. D.7}$$

where,

$\bar{x}$ = mean of three initial calibration factors (per compound).

x_c = calibration factor from current calibration check standard (per compound).

9.5 Technical Acceptance Criteria

9.5.1 The %D between the calibration factors for each target compound and the SMC in the calibration check standard and the mean calibration factor for that compound in the initial calibration must be within ± 35.0 percent. Up to two target compounds may exceed ± 35.0 %D, however, all compounds must be within ± 45.0 %D.

9.5.2 All target compound absolute and relative retention times must be within the windows established during the initial calibration. Report calibration check RT and RRT data on Form QI-PAH (see Exhibit B).

9.5.3 The retention time of the SMC in the calibration check standard must be within ± 1.0 percent of the mean SMC retention time calculated from the three initial calibration standards.

9.5.4 The peak resolution between phenanthrene and anthracene, and between indeno(1,2,3-cd)pyrene and dibenz(a,h)anthracene shall be evaluated in the calibration check standard before proceeding with sample analyses (see paragraph 11 System Performance - GC Resolution).

9.6 Corrective Action

9.6.1 If the %D for more than two compounds is not within ± 35.0 <u>or</u> if any compound is not within ± 45.0 %D, reanalyze the calibration check standard. If upon reanalysis any compound is still outside the criteria, a new initial calibration shall be performed before samples can be analyzed. The instrument must be recalibrated as described in paragraph 8.

9.6.2 If the RT or RRT for any compound is not within the RT and RRT windows established during the initial calibration, reanalyze the calibration check standard. If upon reanalysis a compound is still outside the windows, a new initial calibration must be performed before samples can be analyzed. The instrument must be recalibrated as described in paragraph 8.

9.6.3 If the SMC RTS is not within ± 1.0 percent of the mean SMC RT calculated from the initial calibration, the calibration check standard shall be immediately reanalyzed. If the RTS is still outside the criterion upon reanalysis, corrective action shall be performed, which may include a new initial calibration. DO NOT proceed with sample analyses until the RTS is within ± 1.0 percent.

9.6.4 If the peak resolution criteria are not met, the Laboratory shall perform corrective action and demonstrate adequate resolution before samples can be analyzed.

9.6.5 All calibration check technical acceptance criteria shall be met before any samples or required blanks are analyzed. Any samples or required blanks analyzed when the calibration check criteria have not been met shall require reanalysis at no additional cost to the Agency.

9.7 Documentation

Calibration check standard results are reported on Forms QI-PAH, QV-PAH, and QVI-PAH. Reporting requirements are listed in Exhibit B.

10 Calibration of the GC System - Performance Verification Standard (PVS)

10.1 Summary

A PVS shall be analyzed at the end of every 24-hour analytical sequence. The analysis of the PVS shall be started within 24 hours after the injection of the first initial calibration standard or the instrument blank analyzed before a valid calibration check standard. The PVS is two times the concentration of the low level standard from the initial calibration (see paragraph 6.3.2).

10.2 Frequency

An acceptable PVS must be analyzed at the conclusion of the analytical sequence. The PVS analysis shall be started within 24 hours after the injection of the first initial calibration standard or the instrument blank analyzed before a valid calibration check standard. If a successful PVS analysis is not obtained at the conclusion of the analytical sequence, all samples analyzed since the last successful PVS, initial calibration, or valid calibration check standard shall be reinjected and reanalyzed in a valid analytical sequence at no additional expense to the Agency. The Laboratory is encouraged to run additional PVS analyses during an analytical sequence to minimize unpaid reanalyses. If an acceptable PVS is analyzed during an analytical sequence, the Laboratory may continue to collect data under the current calibration until the conclusion of the current 24-hour sequence. If at any time an unsuccessful PVS analysis is made, the Laboratory shall stop sample analysis and immediately reanalyze the PVS. If on reanalysis the PVS is still outside QC criteria, the Laboratory shall take corrective action and recalibrate the GC (run a new initial calibration) prior to reinitiating sample analyses. Recalibration will begin a new analytical sequence.

10.3 Procedure

10.3.1 The GC conditions shall be the same as those used for analyzing samples.

10.3.2 The PVS is two times the concentration of the low level standard from the initial calibration (see paragraph 6.3.2).

10.3.3 The PVS solution shall be equilibrated to ambient temperature prior to injection (approximately 1 hour).

10.3.4 The same injection volume shall be used for all field and QC samples and standards including the PVS.

10.3.5 The recovery of each compound and the SMC in the PVS is quantitated using the mean calibration factor, the mid point, or by using a K curve established during the initial calibration. (NOTE: Only one method of quantitation shall be used for analyses within a given analytical sequence and for a given Batch of samples.)

10.4 Calculations

The amount of PVS compounds and the SMC recovered shall be calculated using the following equations:

$$Amount\ Observed = \frac{A_x}{CF_m} \qquad \text{EQ. D.8}$$

where: A_x = area or peak height of the PVS compound or SMC.

CF_m = calibration factor established by one of three techniques during the initial calibration.

$$Amount\ Recovered = \frac{Amount\ Observed\ (ng)}{Amount\ Added\ (ng)} X\ 100 \qquad \text{EQ. D.9}$$

10.5 Technical Acceptance Criteria

10.5.1 All PVS target compounds must have a calculated recovery of 75-125 percent in order to report data without flags.

10.5.2 If recovery of a PVS compound is not within 75-125 percent but still within an expanded recovery window of 50-150 percent, the associated sample analyses results shall be flagged (see paragraph 10.6).

10.5.3 The SMC recovery criterion of 50-150 percent is advisory only. Reanalysis of the PVS is not performed if the SMC recovery is outside the advisory recovery limts. The SMC recovery in the PVS must, however, be greater than or equal to 20 percent and less than or equal to 200 percent (see paragraph 10.6).

10.5.4 All target compound absolute and relative retention times must be within the windows established during the initial calibration. Report PVS RT and RRT data on Form QI-PAH (see Exhibit B).

10.5.5 The RTS for the SMC in the PVS must be within ± 1.0 percent of the mean SMC RT calculated from the initial calibration.

10.5.6 The peak resolution between phenanthrene and anthracene, and between indeno(1,2,3-cd)pyrene and dibenz(a,h)anthracene shall be evaluated in the PVS before proceeding with sample analyses (System Performance - GC Resolution, paragraph 11).

10.6 Corrective Action

10.6.1 If recovery of a PVS compound is not within 75-125 percent but still within an expanded recovery window of 50-150 percent, flag the outlier compound "P" in all associated field sample results generated since the last valid PVS, initial calibration, or valid calibration check standard.

10.6.2 If any PVS compound is outside the expanded range, the PVS shall be reanalyzed immediately. If, on reanalysis, any compound is still outside the expanded recovery range, stop sample analyses, perform corrective action, run a new initial calibration, and reanalyze all samples run after the last valid PVS, initial calibration, or valid calibration check standard before proceeding with sample analyses.

10.6.3 If the RT or RRT for any compound is not within the RT and RRT windows established during the initial calibration, reanalyze the PVS. If upon reanalysis a compound is still outside the windows, a new initial calibration must be performed before samples can be analyzed. The instrument must be recalibrated as described in paragraph 8. Reanalyze all samples run after the last valid PVS, initial calibration, or valid calibration check standard before proceeding with sample analyses.

10.6.4 If the SMC RTS criterion is not met for a PVS, sample analyses shall be stopped and the noncompliant PVS immediately reanalyzed. If the SMC RTS is still outside the criterion upon reanalysis, corrective action shall be performed, which may include a new initial calibration. DO NOT continue with sample analyses until the RTS is within ± 1.0 percent. Reanalyze all samples that were run between the noncompliant PVS and the last valid PVS, initial calibration, or valid calibration check standard before proceeding with sample analyses.

10.6.5 If the PVS SMC recovery is less than 20 percent, greater than 200 percent, or if peak interferences are present, stop sample analyses, perform corrective action, and immediately reanalyze the noncompliant PVS. If the SMC recovery is still out on reanalysis, perform corrective action and start

a new analytical sequence. All samples analyzed since the last valid PVS, initial calibration or a valid calibration check standard shall be reanalyzed within a valid analytical sequence.

10.6.6 If the peak resolution criteria are not met, the Laboratory shall perform corrective action and demonstrate adequate resolution before samples can be analyzed (see System Performance - GC Resolution, paragraph 11).

10.6.7 If all PVS criteria cannot be met after having taken corrective action, reanalyze (do not re-extract) the associated field samples in another valid analytical sequence. If on reanalyses all QC sample criteria are met and the PVS criteria still cannot be met, then submit all sample data from both sequences. The Laboratory shall describe in the Batch narrative the problems associated with the PVS and how the field sample matrix may have affected the PVS analyses. If the Laboratory can demonstrate that the problems are due to matrix effects, then both sequences are billable.

10.6.8 If a PVS reanalysis is required because of a non-compliant initial PVS analysis, the PVS reanalysis must be started within 26 hours after the start of the current analytical sequence.

10.6.9 Because reanalysis, at no additional cost to the Agency, is required if PVS technical acceptance criteria are not met, more frequent analysis of the PVS is recommended, especially when highly contaminated or complex samples are analyzed.

10.7 Documentation

Results of PVS analyses are reported on Forms QI-PAH, QIII-PAH, and QVI-PAH. Reporting requirements are listed in Exhibit B.

11 <u>System Performance - GC Resolution</u>

11.1 Summary

Peak resolution between phenanthrene and anthracene, and between indeno(1,2,3-cd)pyrene and dibenz(a,h)anthracene shall be measured to establish that there is sufficient chromatographic resolution for accurate compound identifications and quantitations. When minimum peak resolution cannot be met, identification and quantitation are adversely affected due to the difficulty in establishing the baseline.

11.2 Frequency

11.2.1 Initial calibration - The peak resolution for phenanthrene and anthracene, and between indeno(1,2,3-cd)pyrene and dibenz(a,h)anthracene indicated in paragraph 11.4 shall be evaluated in the low initial calibration standard before proceeding with sample analyses.

11.2.2 Calibration check standard - The peak resolution for phenanthrene and anthracene, and between indeno(1,2,3-cd)pyrene and dibenz(a,h)anthracene indicated in paragraph 11.4 shall be evaluated for each valid calibration check standard before proceeding with sample analyses.

11.2.3 Performance verification standard - The peak resolution for phenanthrene and anthracene, and between indeno(1,2,3-cd)pyrene and dibenz(a,h)anthracene indicated in paragraph 11.4 shall be evaluated for each PVS that is analyzed in a valid analytical sequence.

11.3 Calculations

Determine resolution by calculating the percent valley between two peaks using the following equation (see figure 1).

$$\text{Percent Valley} = \frac{\text{Height of the valley between Indeno(1,2,3-cd)pyrene (or phenanthrene) and dibenz(a,h)anthracene (or anthracene)}}{\text{Peak height of smaller peak being resolved}} \times 100 \qquad \text{EQ. D.10}$$

11.4 Technical Acceptance Criteria

11.4.1 Initial calibration - The percent valley must be less than or equal to 35 percent between phenanthrene and anthracene in the analysis of the low standard of the initial calibration. The percent valley must also be less than or equal to 35 percent between indeno(1,2,3-cd)pyrene and dibenz(a,h)anthracene in the analysis of the low standard of the initial calibration.

11.4.2 Calibration check standard - The percent valley must be less than or equal to 35 percent between phenanthrene and anthracene in the calibration check standard. The percent valley must also be less than or equal to 35 percent between indeno(1,2,3-cd)pyrene and dibenz(a,h)anthracene in the calibration check standard.

11.4.3 Performance verification standard - The percent valley must be less than or equal to 45 percent between phenanthrene and anthracene in the analysis of the PVS. The percent valley must be also less than or equal to 45 percent between indeno(1,2,3-cd)pyrene and dibenz(a,h)anthracene in the analysis of the PVS.

11.5 Corrective Action

11.5.1 If the peak resolution for the compounds indicated in paragraph 11.1 exceeds the 35 percent valley criterion in the low level standard analyzed during the initial calibration, corrective action shall be taken, and a new initial calibration shall be performed and documented before proceeding with sample analyses.

11.5.2 If the peak resolution for the compounds indicated in paragraph 11.1 exceeds the 35 percent valley criterion in the calibration check standard, corrective action shall be performed. A valid calibration check must be demonstrated or a new initial calibration shall be performed and documented before proceeding with sample analyses.

11.5.3 If the percent valley for the PVS does not meet the technical acceptance criteria indicated in paragraph 11.4, the PVS shall be immediately reanalyzed. If after reanalysis the PVS percent resolution is still outside criterion, corrective action shall be performed and a valid calibration check standard run or new initial calibration performed. Reanalyze all samples run after the last valid PVS, initial calibration, or valid calibration check standard before proceeding with sample analyses.

11.5.4 A high percent valley could indicate injector contamination or column degradation; therefore, injection port and/or column maintenance may be required. Maintenance may include replacement of the injector liner and/or removing 0.5 - 1 m of the column. If these measures do not work, column replacement should be considered.

11.6 Documentation

Percent resolution results are reported on Forms QIII-PAH, QIVA-PAH, and QV-PAH. Reporting requirements are listed in Exhibit B.

SECTION IV

SAMPLE ANALYSIS AND COMPOUND IDENTIFICATION AND QUANTITATION

12 Summary

12.1 This method is designed for use in the rapid analysis of water, soil/solid, oil, and wipe samples for the target compounds listed in Exhibit C. If upon inspection of a sample the Contractor suspects that the sample is not amenable to this method, contact the Regional TPO or the CLASS contractor for instructions. For Superfund emergency removal actions, contact the Regional TPO or the Headquarters APO for instructions. If, for emergency response actions, the TPO or APO are not available, contact the Regional On-Scene Coordinator (OSC) for instructions. The Laboratory must remember that it shall follow the requirements in this SOW without deviation.

12.2 Before samples or required blanks can be analyzed, the instrument must meet initial calibration or valid calibration check standard and column resolution technical acceptance criteria. All sample extracts, required blanks, LCS, PVS, and calibration standards shall be analyzed under the same instrumental conditions and shall be allowed to warm to ambient temperature (approximately 1 hour) before preparation/analysis.

12.3 Blank samples, such as trip blanks and field blanks, supplied by the Region and included with a batch of field samples shall be prepared, analyzed, and reported as a water sample. Occasionally, a water QC sample (e.g., field and trip blanks) will be included with a batch of soil samples. If the laboratory is not certain whether a water sample associated with a batch of soil samples is a QC sample, contact the Regional TPO or the CLASS contractor.

NOTE: If water blanks provided by the Region, such as trip and field blanks, are included in a batch of soil samples, the laboratory is not required to prepare and analyze an associated water method blank or a water LCS.

12.4 If unusual or high concentration samples are received, see Exhibit D, Appendix B for general guidance on screening and sample preparation.

13 Procedure

13.1 Phase Separation

Multi-phasic samples shall be phase-separated into their individual phases. The phase separation techniques employed will vary according to the types of samples received. Since it is impossible to know the number and types of phases that will be present in a sample, the choice of phase separation techniques is left to the discretion of the analyst.

Various techniques can be employed to separate the phases. These include pipetting off liquid phases (decanting should not be done), centrifuging to remove suspended solids, and use of spatulas to remove solids (wooden tongue depressors work well). Whenever possible, phase separation operations should be done with disposable glassware. The phases should be separated into glass containers with teflon-lined screw caps. This allows for storage and handling of the waste in a safe manner.

13.1.1 Samples received containing multiple phases such as water, oil, and soil/solid in the same sample jar shall be "phase separated" into individual phases.

13.1.2 Each individual phase is taken through the procedure as a subsample. Report analytical results for each sample phase. Note: Each multi-phase sample shall be identified using the EPA sample number convention for multi-phase samples as specified in Exhibit B.

13.1.3 Do not analyze any phase that represents less than 10 percent of the total sample volume.

13.1.4 In the following procedures, where applicable, references to "samples" explicitly mean "single phase units."

13.2 Sample Preparation and Extraction - Water Samples

A 100 mL aqueous sample is serially extracted using two 10 mL portions of methylene chloride ($MeCl_2$). Extractions are performed in 125 mL Erlenmeyer flasks with a magnetic stirring bar. One gram of NaCl is added to the aqueous sample 3 minutes after the first methylene chloride extracting solvent is added. Extracts are combined, filtered, and dried through powdered anhydrous sodium sulfate, and concentrated with solvent exchange into isoctane to a 1 mL volume using the nitrogen blowdown procedure. Non-PAH extractables are removed from the extract with a silica-gel column clean-up procedure. Final extract volume is 1 mL.

13.2.1 Measure 100 mL of sample into a 125 mL Erlenmeyer flask.

13.2.2 Spike the sample with 10 μL of the SMC (2.0 mg/mL).

13.2.3 Add teflon stirring bar.

13.2.4 Add 10 mL of $MeCl_2$.

13.2.5 Place the sample on magnetic stirring plate and stir for three minutes. The stirring rate should be sufficient to mix $MeCl_2$ throughout the sample.

13.2.6 Add 1 gram of NaCl to sample during stirring and stir for an additional 3 minutes.

13.2.7 Remove stir bar and allow aqueous and $MeCl_2$ layers to separate.

13.2.8 Transfer the $MeCl_2$ by pasteur pipet to a 25 mL concentrator tube.

13.2.9 Repeat steps 13.2.4 - 13.2.5 and 13.2.7 - 13.2.8. Combine extracts. Discard extracted aqueous sample.

13.2.10 Prepare a drying column by plugging the bottom of a funnel with glass wool and adding approximately 15 grams of powdered anhydrous sodium sulfate. Pour extract through funnel and collect in a 25 mL graduated concentrator tube. Rinse the extract container with minimal volumes of $MeCl_2$ and pour through the funnel. Rinse sodium sulfate twice with minimal volumes of $MeCl_2$.

13.2.11 Concentrate extract to approximately 0.5 mL using the nitrogen-blowdown procedure in a 30°C water bath. To minimize analyte loss due to volatility occasionally rinse sides of concentrator tube with isoctane during the blowdown procedure. Add 5 mL of isoctane to concentrator tube and mix vigorously. Reconcentrate to approximately 1 mL. Do not let the extract go dry during concentration.

13.2.12 Proceed to extract clean-up step (paragraph 14).

13.3 Sample Preparation and Extraction - Soil/Solid Samples

A 6 g sample of soil is mixed with powdered anhydrous sodium sulfate and is serially extracted with a 20 mL and a 10 mL portion of $MeCl_2$/acetone (90:10) using an ultrasonic probe. Extracts are combined, filtered, and dried through powdered anhydrous sodium sulfate, and concentrated with solvent exchange into isoctane to a 1 mL volume using the nitrogen blowdown procedure. Non-PAH extractables are removed from the extract with a silica-gel column clean-up procedure. Final extract volume is 1 mL.

13.3.1 Decant and discard any water layer on a soil/solid sample. Mix samples thoroughly, especially composited samples. Discard any foreign objects such as sticks, leaves, and rocks.

13.3.2 Weigh approximately six grams of a representative sample to the nearest 0.1 g into a 150 mL beaker.

13.3.3 To the weighed sample add a sufficient amount of powdered anhydrous sodium sulfate to prepare a free flowing mass upon mixing. Mix well.

13.3.4 Spike the sample with 10 µL of the SMC (2.0 mg/mL), mix further.

13.3.5 Add 20 mL of $MeCl_2$/acetone (90:10).

13.3.6 Sonicate at microtip maximum power; cool the sample during sonication. The sonicator must be set for 50 percent pulse action. Sonicate for 3 minutes. The power output may have to be adjusted to ensure that the sample extract does not splash excessively; any significant loss of sample during sonication is not acceptable. Rinse the sonicator tip after each sample extraction with 1 mL of $MeCl_2$/acetone (90:10). This rinse liquid shall be combined with the sample extract.

13.3.7 Remove and collect solvent layer in a 40 mL centrifuge tube.

13.3.8 Add 10 mL of $MeCl_2$/acetone (90:10) and repeat steps 13.3.6 and 13.3.7.

13.3.9 Combine extracts and filter by gravity or vacuum filtration. Complete filtration by transferring entire sample contents to funnel and rinse with an additional 10 mL $MeCl_2$/acetone (90:10).

13.3.9.1 For gravity filtration, prepare a filtration/drying bed with Whatman #42 filter paper filled with approximately 15 grams of powdered anhydrous sodium sulfate in a 6 cm powder funnel. Rinse sodium sulfate and filterpaper with $MeCl_2$/acetone (90:10) and discard rinsate. With the filter and sodium sulfate wetted, decant combined extracts through the packed funnel and collect in a 40 mL centrifuge tube. Rinse the extract container with minimal volumes of $MeCl_2$/acetone (90:10) and pour through the funnel. Rinse filter/sodium sulfate with 10 mL of $MeCl_2$/acetone (90:10).

13.3.9.2 For vacuum filtration use Whatman #42 filter paper in a Buchner funnel. Pre-wet the paper with $MeCl_2$/acetone (90:10) and discard rinsate. Transfer combined extracts into funnel, apply vacuum, and collect filtrate. Rinse filter with an 10 mL of $MeCl_2$/acetone (90:10). Pour filtered extract through a powder funnel plugged with glass wool and filled with powdered

anhydrous sodium sulfate and collect in a 40 mL centrifuge tube. Rinse the extract container with minimal volumes of $MeCl_2$/acetone (90:10) and pour through the funnel. Rinse sodium sulfate with an additional 10 mL $MeCl_2$/acetone (90:10).

13.3.10 Concentrate extract to approximately 25 mL using the nitrogen-blowdown procedure in a 30°C water bath. Transfer extract concentrate to a 25 mL concentrator tube and concentrate further to approximately 0.5 mL. Add 5 mL of isoctane to concentrator tube and mix vigorously. Reconcentrate to approximately 1 mL. Do not allow extract to go dry during concentration. To minimize analyte loss due to volatility, occasionally rinse sides of centrifuge and concentrator tubes with isoctane during the blowdown procedure.

13.3.11 Proceed to extract clean-up step (paragraph 14).

13.4 Sample Preparation and Extraction - Oil Samples

NOTE: The PAH target compound CRQL for oil samples is 20,000 µg/kg (see Exhibit C).

13.4.1 Add 1.0 g of sample to a 10 mL volumetric flask.

Note: Oily mixtures should first be phase-separated according to the procedures in paragraph 13.1.

13.4.2 Add 1.0 mL of SMC (200 µg/mL) to the sample.

13.4.3 Add $MeCl_2$/acetone (90:10) to the volumetric flask until reaching the 10 mL meniscus mark.

13.4.4 Cap with stopper and mix for one minute.

13.4.5 Pipet exactly 1.0 mL out and concentrate extract to approximately 0.5 mL using the nitrogen-blowdown procedure in a 30°C water bath. To minimize analyte loss due to volatility, occasionally rinse sides of concentrator tube with isoctane during the blowdown procedure. Add 5 mL of isoctane to concentrator tube and mix vigorously. Reconcentrate to approximately 1 mL. Do not let the extract go dry during concentration.

13.4.6 Proceed with clean-up and final concentration as specified in paragraph 14.

13.5 Sample Preparation and Extraction - Wipe Samples

A wipe sample containing PAHs is serially extracted with two portions of methylene chloride ($MeCl_2$) using an ultrasonic probe. Extracts are combined, filtered, and dried through powdered anhydrous sodium sulfate. Non-PAH extractables are removed from the extract with a silica-gel column clean-up procedure. The cleaned extract is concentrated to 1 mL using the nitrogen blowdown procedure.

NOTE: The target compound CRQLs for wipe samples will be specified by the Agency.

13.5.1 Pour off any free solvent from the sample jar into a clean Erlenmeyer flask of appropriate size.

13.5.2 Spike the sample with 10 uL of the SMC (2.0 mg/mL).

13.5.3 Add enough clean $MeCl_2$ to the sample jar to cover the wipe sample.

13.5.3.1 If the shape of the sample jar is not amenable to sonication, quantitatively transfer the sample to an appropriate container. Rinse the sample jar with 5-10 mL of hexane and transfer to the new sample container.

13.5.4 Follow steps 13.3.6 - 13.3.11. In step 13.3.9, filter the combined extracts by gravity filtration.

14 Extract Clean-up

The extract clean-up procedure removes alkane and branched alkane interferences from extracts for PAH analysis by GC/FID. This procedure involves slurry-packing a glass column with silica gel, rinsing the column with solvents, adding the sample extract to the column, eluting alkane interferences with a weak solvent, hexane, and then eluting PAH analytes with a stronger solvent mixture, hexane/$MeCl_2$. Final concentration/solvent exchange into 1 mL hexane is performed using the nitrogen blowdown procedure.

(NOTE: Effectiveness of this extract clean-up procedure is dependent on the completeness of any preceding solvent exchange steps. All extracts must be in isoctane with all traces of $MeCl_2$ and acetone removed.)

14.1 Activate silica gel for 16 hours at 130°C in a shallow glass tray loosely covered with foil. Cool and store activated silica-gel in a dessicator until ready for use.

14.2 Immediately prior to sample clean-up, prepare a silica gel clean-up column by placing a glass wool plug on the bottom of a 10 mm i.d. x 15 cm glass column with teflon stopcocks. (NOTE: Appropriate opening and

closing of the stopcock will aid in following the steps of this procedure.)

14.3 Add 1.8 grams of activated silica gel to a 50 mL beaker. Add 10 mL of methylene chloride and mix well to generate a slurry.

14.4 Using a small funnel, transfer the silica gel/methylene chloride slurry to the glass column. Do not allow the solvent in the column to go below the silica layer. Transfer the residual silica gel slurry using methylene chloride rinses. Excess methylene chloride in the column is removed by flowing through the column to waste. Do not allow solvent layer to go below the silica gel. After silica-gel slurry transfer is completed, add 1-2 centimeters powdered anhydrous sodium sulfate to the top of the column. If needed, add additional $MeCl_2$ to wet sodium sulfate. Do not allow solvent layer to go below the sodium sulfate.

14.5 Bring solvent level to just above the sodium sulfate layer and rinse with 10 mL of methylene chloride. As methylene chloride level reaches to just above the sodium sulfate layer, add 10 mL of hexane. Bring hexane level to top of sodium sulfate layer while continuing to pass eluate to waste.

14.6 Add sample extract (in isoctane solvent) to silica gel column. Rinse the concentrator tube with two 0.5 mL portions of isoctane to complete transfer of sample extract.

14.7 As extract level nears the sodium sulfate add 10 mL of hexane. Bring hexane level to top of sodium sulfate. Discard eluate.

14.8 Add 10 mL of hexane/$MeCl_2$ (60:40) and collect the first 10 mL of eluate in a 10 mL concentrator tube.

14.9 Concentrate extract using a nitrogen-blowdown procedure in a 30°C water bath. To minimize analyte loss due to volatility be sure to rinse sides of concentrator tube with hexane during blowdown procedure. Final extract volume is 1 mL. This final volume is suitable for extract compound concentrations of 2.0 µg/mL to 100 µg/mL. This is equivalent to sample compound concentrations of 20 to 1000 µg/L for water samples, 330 to 16600 µg/kg for soil/solid samples, and 20,000 µg/kg to 1,000 mg/kg for oil samples.

14.10 Transfer the extract to an autosampler or other 1-mL vial and analyze according to paragraph 15.

15 <u>Instrumental Analysis</u>

15.1 Set up the GC system per the requirements in paragraph 7.

15.1.1 Solvent-flush manual injection or automated sample injection is recommended for analysis.

15.1.2 An analytical sequence consists of field sample analyses and all associated standards, blanks, and QC analyses analyzed within a 24-hour period on one instrument. There are two (2) types of analytical sequences: an initial calibration analytical sequence and a daily calibration check analytical sequence. All samples shall be analyzed within one of these analytical sequences.

15.1.2.1 An initial calibration analytical sequence begins with a three-point calibration, an instrument blank, an LCS, and a method blank. The initial calibration analytical sequence is as follows:

- Initial three-point calibration (analysis of the high standard followed by the mid and low standards);
- Instrument Blank;
- Laboratory Control Sample(s);
- Method Blank(s);
- Field Sample(s);
- Instrument Blank(s); and
- Performance Verification Standard(s).

15.1.2.2 A daily calibration check analytical sequence begins with an instrument blank, a valid calibration check standard, a method blank, and an LCS. The daily calibration analytical sequence is as follows:

- Instrument Blank;
- Calibration Check Standard;
- Method Blank(s);
- Laboratory Control Sample(s);
- Field Sample(s);
- Instrument Blank(s); and
- Performance Verification Standard(s).

15.1.3 If all acceptance criteria for these analyses are met, then the Laboratory may proceed with sample analyses.

15.1.4 All analytical sequences conclude with an acceptable instrument blank and a PVS analysis. The PVS shall be started within 24 hours after the injection of the first initial calibration standard or the first instrument blank in the daily calibration sequence.

NOTE: If a PVS reanalysis is required because of a non-compliant initial PVS analysis, the PVS reanalysis must be started within 26 hours after the start of the current analytical sequence.

15.1.5 The method blank and all associated samples shall be analyzed in the same analytical sequence. If samples from a batch are analyzed in more than one analytical sequence, the associated method blank must also be analyzed in the same analytical sequence. If a method blank extract is used up because of multiple analyses, the Laboratory shall substitute an instrument blank in place of a method blank in all subsequent analytical sequences. The Laboratory shall note this in the Batch Narrative and shall use the EPA identification number as described in Exhibit B for this instrument blank.

15.1.6 The LCS shall be analyzed with all associated samples in the same analytical sequence. If samples from a batch are analyzed in more than one analytical sequence, the associated LCS shall be analyzed in the same analytical sequence. If an LCS extract is used up because of multiple analyses, the Laboratory shall dilute the LCS standard mixture (the original stock mix) and use this solution in place of the original LCS sample in all subsequent analytical sequences (see paragraph 24). The Laboratory shall note this in the Batch Narrative and shall use the EPA identification number as described in Exhibit B for this LCS solution.

15.2 Computer reproductions of chromatograms that are attenuated to ensure that all peaks are on scale over a 100-fold range are acceptable. However, post analysis attenuation shall be no greater than a 100-fold range. This is to reduce the potential for RTS of compounds due to column overload and to ensure that the detector is operating within the calibration range. If any sample compounds exceed the calibration range, they shall be diluted according to paragraph 16.

15.3 If any saturated non-target compound chromatographic peaks are evident or if any chromatographic peaks overlap more than one RRT and/or RT

target compound windows, the Laboratory shall use the "E,N" flags on Form QI-PAH to indicate this situation.

15.3.1 If saturated chromatographic peaks outside target compound RRT and/or RT windows are evident, flag the nearest target compound "E,N" on Form QI-PAH.

15.3.2 If chromatographic peaks overlapping more than one target compound RRT and/or RT windows are evident, flag the corresponding target compounds "E,N" on Form QI-PAH.

15.4 Chromatographic peak response must be greater than 10 percent and less than 100 percent of full-scale deflection to ensure that individual compounds will be visible during data review.

16 Dilutions

16.1 Samples with compounds exceeding the calibration range of the GC must be reported with the "E" data flag as described in Exhibit B. Upon evaluation, the Region may require that the samples be diluted, reextracted, and/or reanalyzed in a valid analytical sequence as additional paid samples. Reextraction and/or reanalysis of samples can only be authorized by the CLASS contractor acting on behalf of the Regional TPO or Headquarters APO. The Laboratory shall perform the dilution analysis as specified below in paragraph 16.2.

16.2 The Laboratory may dilute samples prior to initiating sample analysis. The resulting analysis of those samples must produce chromatograms with at least one target compound present at a concentration greater than that found in the mid point calibration mixture. If no compound is identified in the diluted sample at a concentration that exceeds the mid level standard, then the undiluted sample shall be reanalyzed at no additional cost to the Agency.

16.2.1 At the request of the Region, sample dilution may be required prior to the initial analysis. If no target compounds are detected in the diluted samples at the mid point concentration or greater, then the undiluted sample shall be reanalyzed as an additional paid sample.

16.2.2 Sample dilutions shall be made by using an appropriate aliquot of the extract diluted in isoctane. After making a dilution, add sufficient SMC solution to bring up to proper concentration (20 μg/mL).

16.2.3 Sample dilutions shall be analyzed in a valid analytical sequence which includes the associated method blank and LCS.

16.2.4 If sample reextractions and reanalyses are required, the Laboratory shall also reextract and reanalyze an associated method blank and LCS.

17 Identification of Target Compounds

17.1 Retention Time Standard - The SMC shall be used as the RT marker for compound identification. The SMC shall also be used to monitor extraction efficiency.

17.1.1 The SMC shall be added to all field and QC samples prior to extraction.

17.1.2 In each analysis, the SMC RT must be within ± 1.0 percent of the mean RT of the SMC established during the initial calibration.

17.2 Compound identification when SMC recovery is greater than or equal to 10 percent and less than or equal to 200 percent.

17.2.1 Target compounds shall be identified on the basis of RRT in all field samples for which the SMC recovery is greater than or equal to 10 percent and less than or equal to 200 percent.

17.2.2 Peaks in sample chromatograms shall be identified as target compounds if their RRT is within ± 0.008 RRT units of the mean RRT established during initial calibration.

17.3 Compound identification when SMC recovery is less than 10 percent, greater than 200 percent, or if peak interferences are present.

17.3.1 Target compounds shall be identified on the basis of absolute RT in all field samples for which the SMC recovery is less than 10 percent, greater than 200 percent, or if peak interferences are present.

17.3.2 Peaks in sample chromatograms shall be identified as target compounds if their absolute RT is within ± 1.0 percent of the mean RT established during the initial calibration.

17.3.3 Any compound identified on the basis of absolute RT shall be flagged with the qualifier "T" (See Exhibit B).

17.3.4 If the recovery of the SMC in a field sample is less than 10 percent, greater than 200 percent, or if peak interferences are present, an acceptable recovery of the SMC must be obtained in the associated method blank and LCS (see paragraph 22 and 24).

17.4 If multiple peaks are within the identification windows (target compound and SMC), the Laboratory shall use professional judgement to properly identify the appropriate peak. The Laboratory should consider the inherent matrix affects of the sample on peak shifting, masking, and overlaps when making identification determinations. The Laboratory should take into consideration the mean RT and RRT from the initial calibration, RT and RRT from the calibration check standard, and the SMC RT from relatively clean samples analyzed before and after the sample in question as a basis for selecting the most appropriate peak. The Laboratory shall describe in the Batch Narrative the rationale used for choosing a particular peak (e.g., chose peak closest to the RT of the peak in calibration check standard) as the target compound or SMC and how the field sample matrix may have affected peak identification.

18 Calculations

18.1 Calculate the RRT of a sample component or a standard using the following equation:

$$RRT = \frac{RT_{component}}{RT_{SMC}} \qquad \text{EQ. D.11}$$

where:

RRT = relative retention time

$RT_{component}$ = retention time of the target compound

RT_{SMC} = retention time of the SMC

18.2 Calculate the calibration factor for a compound by one of three techniques using data collected during an acceptable initial calibration (paragraph 8). The use of the line segment or "K" curve is suggested. Only one of the quantitation techniques listed below shall be used for quantitating samples within a Batch and analyzed within a given analytical sequence.

18.2.1 Use the "K" curve (line segments) established during initial calibration. The segments run from the low to the mid point and from the mid to the high point calibration mixtures. (Note: do not extend line segment through the origin if the concentration is below the CRQL).

18.2.2 Use the calibration factors based on the mid point of the initial calibration curve. This option may be used as long as the mid point values are within ± 10 percent of the average of the high and low point values.

18.2.3 Use the mean calibration factor established during the initial calibration.

18.2.4 Quantitation of compounds is based on the calibration factors established during the initial calibration.

18.2.5 All calibration requirements, including the initial calibration %RSD and the calibration check %D criteria, must be met regardless of the quantitation technique used.

18.3 Quantitation of Target Compounds

Calculate the concentration in the sample using one of the following equations for external standards. The response can be measured by automated peak height or integrated peak area measurements.

18.3.1 Water

$$Concentration\ (\mu g/L) = \frac{(A_x)\,(V_t)}{(CF_m)\,(V_i)\,(V_s)} \qquad \text{EQ. D.12}$$

where:

A_x = response for the analyte to be measured

CF_m = calibration factor established by one of three techniques during the initial calibration. (NOTE: Only one method of quantitation may be used for samples within a Batch and analyzed within a given analytical sequence.)

V_t = volume of concentrated extract (use 1000 µL or a factor of this when dilutions are made).

V_i = volume of extract injected (µL).

V_s = volume of water extracted (mL).

18.3.2 Soil/Solid (Wet-weight basis) and Oil

$$Concentration\ (\mu g/kg) = \frac{(A_x)\,(V_t)}{(CF_m)\,(V_i)\,(W_s)} \qquad \text{EQ. D.13}$$

where:

A_x, CF_m, V_i = same as given in Equation D.12

V_t = volume of concentrated extract (use 1000 µL or a factor of this when dilutions are made).

W_s = weight of sample extracted in g.

Note: for oil samples, divide W_s by 10. The factor of 10 for the W_s, is necessary because only one-tenth of the extract is processed and analyzed.

18.4 Calculate the SMC amount observed and amount (percent) recovered using equations as described in paragraph 10.4.

18.5 Retention time shifts (RTS) shall be monitored using the SMC (paragraph 17.1). The RTS shall be measured for all analyses.

18.5.1 Calculate the retention time percent difference (RT %D) between the RT of the SMC in the field and QC samples or subsequent standards analyzed and the mean SMC RT from the most recent initial calibration analyzed using the following equation:

$$RT\ \%D = \frac{RT_c - RT_s}{RT_c} \times 100 \qquad \text{EQ. D.14}$$

Where:

RT %D = retention time shift.

RT_s = retention time of the SMC in a field and QC sample or subsequent standard.

RT_c = mean retention time of the SMC from the most recent initial calibration.

19 Technical Acceptance Criteria

19.1 Each sample within a Batch shall be analyzed on a GC system meeting the initial calibration or valid calibration check standard technical acceptance criteria (paragraphs 8 and 9).

19.2 Each sample within a Batch shall be analyzed after an acceptable method and instrument blank (paragraphs 22 and 23), and after an acceptable LCS (paragraph 24) are analyzed.

19.3 Each sample within a Batch shall be run within a valid initial calibration or daily calibration check analytical sequence that

concludes with an acceptable instrument blank (paragraph 23) and an acceptable PVS (paragraph 10).

19.4 Each sample within a Batch shall be analyzed and results reported within the contract required turnaround times.

19.5 Each sample matrix within a Batch shall have an acceptable method blank analyzed during the same analytical sequence.

19.6 The RTS for the SMC RT must be within ± 1.0 percent between any sample in a Batch and the mean RT of the SMC analyzed during the initial calibration. The RTS is not evaluated if the SMC is not recovered in the sample or if peak interferences are present.

19.7 The advisory recovery limit for the SMC is 50-150 percent. Reanalyses of field samples are not made if the SMC recovery is outside the advisory recovery limits.

19.8 The SMC recovery must be greater than or equal to 10 percent and less than or equal to 200 percent in order to use RRT for identification purposes. The identification window is ± 0.008 unit of the mean RRT of each target compound from the initial calibration. If the recovery of the SMC is less than 10 percent, greater than 200 percent, or if peak interferences are present (but is adequately recovered in the method blank), the absolute RT of the compounds shall be used for identification purposes. The identification window is ± 1.0 percent of the mean absolute RT of each target compound from the initial calibration.

20 <u>Corrective Action</u>

20.1 Flag all sample results "S" if the SMC is outside the advisory recovery limits of 50-150 percent.

20.2 Flag all sample results "T" if the absolute RTs are used for identifications.

20.3 An SMC recovery of less than 20 percent in the method blank or LCS associated with a sample Batch is an indication that serious problems may have occurred during the extraction process. Corrective action shall be performed and the unacceptable method blank and/or LCS and all samples associated with the unacceptable method blank and/or LCS shall be reextracted and reanalyzed at no additional expense to the Agency.

20.4 If the SMC RTS criterion is not met for any field sample, sample analysis shall be stopped and the noncompliant sample rerun. If the RTS criterion is still out upon reanalysis, analyze an instrument blank. If the instrument blank SMC RTS is outside the criterion, perform corrective action which may include a new initial calibration. DO NOT continue with sample analyses until the RTS is within ± 1.0 percent. If

the instrument blank SMC RTS meets the criterion, sample analysis may continue. The Laboratory shall report both sets of noncompliant sample data and flag the results "M". Note: the RTS is not evaluated if the SMC is not recovered in the sample or if peak interferences are present.

20.5 All target compound concentrations which exceed the upper limit of the initial calibration range will be flagged "E" (see Exhibit B).

NOTE: Unless otherwise stated in Exhibit D, all sample data from the initial analysis shall be reported to the appropriate Region. Samples not meeting any one of the contract technical acceptance criteria and not requiring automatic reextraction and/or reanalysis shall be flagged by the Laboratory. The Region will evaluate the noncompliant samples and may specify that these be reanalyzed as additional paid samples.

21 Documentation

Sample results shall be reported on Forms QI-PAH and QVI-PAH. Reporting requirements are listed in Exhibit B.

SECTION V

SAMPLE QUALITY CONTROL PROCEDURES AND REQUIREMENTS

22 Method Blank Analysis

22.1 Summary - A method blank for water samples is 100 mL of reagent water spiked with the SMC and carried through the entire analytical scheme. A method blank for soil/solid samples is 6 g of clean quartz sand spiked with the SMC and carried through the entire analytical scheme. A method blank for oil samples is 1 g of corn oil spiked with the SMC and carried through the entire analytical scheme. Method blanks shall be carried through the entire analytical procedure.

NOTE: The Agency will provide the laboratory with further instructions for the analysis of method blanks for wipe samples.

22.2 Frequency

A method blank analysis shall be performed for each matrix type (water, soil/solid, or oil) and with each set of samples. A set of samples is defined as those samples from one Batch that are extracted and analyzed on one instrument during a 24-hour analytical sequence.

22.2.1 The method blank and all associated samples shall be analyzed in the same analytical sequence. If samples from a batch are analyzed in more than one analytical sequence, the associated method blank must also be analyzed in the same analytical sequence. If a method blank extract is used up because of multiple analyses, the Laboratory shall substitute an instrument blank in place of a method blank in all subsequent analytical sequences. The Laboratory shall note this in the Batch Narrative and shall use the EPA identification number as described in Exhibit B for this instrument blank.

22.2.2 An acceptable method blank shall be analyzed before running any samples within an analytical sequence.

22.2.3 Criteria for an acceptable method blank is defined in paragraph 22.4.

22.3 Procedure for Method Blank Preparation

22.3.1 Prepare the method blanks at the frequency listed in paragraph 22.2.

22.3.2 Measure out 100 mL of reagent water for each water method blank sample aliquot. Spike with 10 µL of the SMC and

extract and clean-up the method blank according to paragraphs 13 and 14.

22.3.3 Prepare the soil/solid method blank by weighing approximately 6 g of clean quartz sand and adding sufficient amount of powdered anhydrous sodium sulfate to create a free flowing mass upon mixing. Spike with 10 µL of the SMC and extract and clean as described in paragraphs 13 and 14.

22.3.4 Spike 1.0 g of corn oil with 1.0 mL of SMC (200 µg/mL) and proceed with the PAH extraction and analysis procedure (paragraphs 13.4.3 - 13.4.5).

22.3.5 Analyze the method blank extracts. Calculate the results according to paragraph 18.

22.4 Technical Acceptance Criteria

22.4.1 All method blanks shall be analyzed within an acceptable analytical sequence on a GC system meeting the initial three-point calibration criteria (paragraph 8) or valid calibration check standard criteria (paragraph 9), and the PVS acceptance criteria (paragraph 10).

22.4.2 The RTS for the SMC in the method blank must be within ± 1.0 percent between the blank SMC RT and the mean SMC RT calculated from the initial calibration.

22.4.3 The SMC recovery criterion of 50-150 percent is advisory only. The SMC recovery in the method blank must, however, be greater than or equal to 20 percent and less than or equal to 200 percent.

22.4.4 The target compounds or potential interferences in the method blanks must have a response less than one-half the response in the corresponding RRT window of the initial calibration low concentration standard.

22.4.5 A method blank may contain a detectable but acceptable concentration of a target compound (less than one-half the response of the initial calibration low concentration standard).

22.4.6 If all criteria are satisfied, the method blank analysis is acceptable and samples may be analyzed. If the method blank is unacceptable, corrective action shall be taken and an acceptable method blank must be analyzed prior to analyzing the associated samples.

22.5 Corrective Action

22.5.1 If a method blank does not meet the technical acceptance criteria, the Contractor shall consider the analytical system to be out of control. It is the Contractor's responsibility to eliminate method interferences caused by contaminants in solvents, reagents, cartridges, glassware, and other sample storage and processing hardware that lead to discrete artifacts and/or elevated baselines in gas chromatograms. If contamination is a problem, the Contractor shall investigate the source of the contamination, and appropriate corrective measures shall be taken and documented before further sample analysis proceeds.

22.5.2 If a compound is found in the method blank (less than one-half the response in the corresponding RRT window of the initial calibration low concentration standard) and is also detected in an associated field sample at less than the CRQL, the compound shall be reported as a nondetect, i.e., with a "U" flag.

22.5.3 If the SMC recovery in the method blank is less than 20 percent, greater than 200 percent, or if peak interferences are present, the method blank shall be immediately rerun. If on reanalysis the method blank SMC recovery is still outside the recovery limits, the method blank and all associated samples shall be reextracted and reanalyzed at no additional cost to the Agency.

22.5.4 Flag all method blank results "S" if the SMC does not meet the advisory recovery criterion of 50-150 percent.

22.5.5 If the RTS criterion is not met for a method blank, sample analyses shall be stopped and the noncompliant blank rerun. If the RTS criterion is still out on reanalysis, perform corrective action which may include a new initial calibration. DO NOT continue with sample analyses until the RTS is within ± 1.0 percent.

22.5.6 Any samples processed with a method blank that is out of control (i.e., does not meet any of the technical acceptance criteria) shall be reextracted and/or reanalyzed at no additional expense to the Agency.

22.6 Documentation

Method blank results are reported on Forms QI-PAH and QVI-PAH. Reporting requirements are listed in Exhibit B.

23 Instrument Blank Analysis

23.1 Summary

An instrument blank is 1 mL of hexane spiked with 10 µL of SMC (2.0 mg/mL). At least two acceptable instrument blanks shall be analyzed within an analytical sequence, one before sample analyses and one following sample analyses.

23.2 Frequency

An instrument blank shall be analyzed at least twice during the analytical sequence to ensure that the instrument is free from potential contaminants. The first instrument blank analysis shall be performed after the initial three-point calibration in the initial calibration analytical sequence or as the first analysis in a daily calibration check analytical sequence. The second instrument blank analysis shall be performed immediately before the PVS analysis. The Laboratory is encouraged to run additional instrument blanks during the analytical sequence, especially when highly contaminated or complex samples are analyzed. Instrument blanks must be analyzed after analysis of samples with high levels of target compounds or interferents (see paragraph 23.5.6).

23.3 Procedure for Instrument Blank preparation

An instrument blank is 1 mL of hexane spiked with 10 µL of SMC (2.0 mg/mL).

23.4 Calculations

Concentrations of the SMC and any target compounds in the instrument blank are calculated according to the procedures described in paragraph 18. Note: The target compound concentrations (detected concentrations and CRQL values) in the instrument blank shall be reported in the appropriate concentration units (e.g., report in µg/L if the associated samples are water and in µg/Kg if the associated samples are soil).

23.5 Technical Acceptance Criteria

23.5.1 A minimum of two (2) instrument blanks shall be analyzed during an analytical sequence on a GC system meeting the initial three-point calibration criteria (paragraph 8) or the valid calibration check standard criteria (paragraph 9), and the PVS acceptance criteria (paragraph 10).

23.5.2 The RTS for the SMC in the instrument blank must be within ± 1.0 percent between the blank SMC RT and the mean SMC RT calculated from the initial calibration.

23.5.3 The SMC recovery criterion of 50-150 percent is advisory only. The SMC recovery in the instrument blank must, however, be greater than or equal to 20 percent and less than or equal to 200 percent.

23.5.4 The target compounds or potential interferences in the first instrument blank (analyzed immediately after the initial calibration or before a valid calibration check) must have a response less than one-half the response in the corresponding RRT windows of the initial calibration low level standard.

23.5.5 Subsequent instrument blanks are acceptable with low level contamination. These instrument blanks may contain target compound concentrations up to twice the CRQL (2x CRQL).

23.5.6 Following the analysis of a field sample containing high levels of target compounds or interferents, an instrument blank shall be analyzed and must meet acceptance criteria before proceeding with sample analyses. If an autosampler is utilized, then the field samples run after a high level sample must be carefully evaluated for carryover. The field sample immediately following the high level sample shall be reanalyzed, along with any other samples analyzed after the high level sample which shows evidence of carryover.

23.5.7 High level samples are defined as being field samples that contain target compounds at concentration levels that exceed twice the high calibration standard concentration and/or interferents that are detected at levels greater than the mid level initial calibration concentration response of the nearest target compound.

23.6 Corrective Action

23.6.1 All groups of samples analyzed shall be bracketed with two acceptable instrument blanks. If either instrument blank is unacceptable, corrective action shall be taken and all samples not bracketed by two valid instrument blanks shall be reanalyzed at no additional expense to the Agency.

23.6.2 If the response of any target compound in an instrument blank analyzed after the initial calibration or before a valid calibration check standard is greater than or equal to one-half the response in the corresponding RRT window of the initial calibration low concentration standard, corrective action shall be performed and the system shall be demonstrated to be clean by the analysis of additional instrument blanks until all target compounds are less than one-half response.

23.6.3 If any target compound in an instrument blank analyzed after field/QC sample analyses is greater than two times the CRQL another instrument blank shall be analyzed. If, on reanalysis, contamination still exceeds the criterion, corrective action shall be performed and the system demonstrated to be clean. Then, all associated field/QC samples analyzed since the last valid instrument blank or method blank which contain those target compounds or interferents found in the instrument blank at levels greater than twice the CRQL shall be rerun.

23.6.4 If an instrument blank (other than the first instrument in the analytical sequence) contains target compounds or interferents between one-half response and two times the CRQL, all positive results (results greater than or equal to the CRQL) for those compounds in samples analyzed after the last valid instrument blank shall be flagged with a "B".

23.6.5 Flag all instrument blank results "S" if the instrument blank SMC is not within 50-150 percent.

23.6.6 If the instrument blank SMC recovery is less than 20 percent, greater than 200 percent, or if peak interferences are present, sample analyses shall be stopped, corrective action performed, and another instrument blank shall be analyzed. If the SMC is still out upon reanalysis, corrective action, which may include a new initial calibration shall be performed. All samples analyzed since the last valid method or instrument blank shall be reanalyzed after a valid instrument blank has been obtained.

23.6.7 If the RTS criterion is not met for an instrument blank, sample analyses shall be stopped and another instrument blank shall be analyzed. If the RTS criterion is still out on reanalysis, corrective action which may include a new initial calibration shall be performed. DO NOT continue with sample analyses until the RTS is within ± 1.0 percent.

23.6.8 Any samples not bracketed by valid instument blanks or a valid instrument blank and a method blank and shall be reanalyzed at no additional expense to the Agency.

23.7 Documentation

Instrument blank results are reported on Forms QI-PAH and QVI-PAH. Reporting requirements are listed in Exhibit B.

24 Laboratory Control Samples

24.1 Summary

The QTM PAH LCS mixture initially will be supplied to contractors by the Agency. The LCS mixture will contain target compounds at several known concentrations. The Laboratory shall spike the LCS mixture into a clean matrix that is similar to the samples being analyzed. The spiked matrix shall be prepared and analyzed using the procedures described for field samples. Analysis of the LCS will assess the performance of the analytical system prior to analyzing field samples.

NOTE: The Agency will provide the laboratory with further instructions for the analysis of LCSs for wipe samples.

24.2 Frequency

An LCS shall be analyzed once per matrix per analytical sequence (24 hours) per instrument. The LCS shall be analyzed after the first instrument blank in the initial calibration analytical sequence or after the method blank in the daily calibration analytical sequence.

24.2.1 An LCS shall be analyzed with each:

- Set of water field samples (LCS prepared from reagent water);
- Set of soil/solid field samples (LCS prepared with quartz sand); and
- Set of oily field samples (LCS prepared with corn oil).

24.2.2 The LCS shall be analyzed with all associated samples in the same analytical sequence. If samples from a batch are analyzed in more than one analytical sequence, the associated LCS shall be analyzed in the same analytical sequence. If an LCS extract is used up because of multiple analyses, the Laboratory shall use the original stock mix diluted into hexane in place of the original LCS sample in all subsequent analytical sequences. The Laboratory shall prepare this solution by diluting 100 μL of the LCS standard mixture into 5 mL of hexane and concentrating to 1 mL using nitrogen blowdown. The Laboratory shall note this in the Batch Narrative and shall use the EPA identification number as described in Exhibit B for this LCS solution.

24.3 Procedure

Spike the appropriate matrix with the LCS standard mixture and prepare as follows.

24.3.1 Water LCS

24.3.1.1 Allow the LCS mixture ampules to reach room temperature before opening. The ampules must not be opened until preparation/analysis is to occur. Exercise care in breaking the ampules open to avoid injury.

24.3.1.2 Spike 100 mL of reagent water with 100 µL of the LCS standard mixture as described in the instructions provided with the LCS mixtures. Use syringes to perform the spiking to ensure accuracy. Add the SMC and mix and carry through the extraction and clean-up process as described in paragraphs 13 and 14. Proceed with the analysis as described in paragraph 15.

24.3.1.3 Nominal aqueous LCS target compound concentrations are as follows:

Acenaphthylene	54 µg/L
Anthracene	78 µg/L
Benzo(a)anthracene	52 µg/L
Benzo(b)floranthene	68 µg/L
Benzo(g,h,i)perylene	36 µg/L
Chrysene	43 µg/L
Dibenz(a,h)anthracene	43 µg/L
Naphthalene	90 µg/L
Phenanthrene	41 µg/L

24.3.2 Soil LCS

24.3.2.1 Allow the LCS mixture ampules to reach room temperature before opening. The ampules must not be opened until preparation/analysis is to occur. Exercise care in breaking the ampules open to avoid injury.

24.3.2.2 Spike 6 g of quartz sand with 100 µL of the LCS standard mixture as described in the instructions provided with the LCS mixtures. Use syringes to perform the spiking to ensure accuracy. Add the SMC and mix and carry through the extraction and clean-up process as described in paragraphs 13 and 14. Proceed with the analysis as described in paragraph 15.

24.3.2.3 Nominal LCS target compound concentrations are as follows:

Acenaphthylene	900 µg/Kg
Anthracene	1,300 µg/Kg
Benzo(a)anthracene	867 µg/Kg
Benzo(b)floranthene	1,133 µg/Kg
Benzo(g,h,i)perylene	600 µg/Kg
Chrysene	717 µg/Kg
Dibenz(a,h)anthracene	717 µg/Kg
Naphthalene	1,500 µg/Kg
Phenanthrene	683 µg/Kg

24.3.3 Oil LCS

This section has not been finalized. The LCS composition and concentrations for oils are currently being investigated.

24.3.3.1 Allow the LCS mixture ampules to reach room temperature before opening. The ampules must not be opened until preparation/analysis is to occur. Exercise care in breaking the ampules open to avoid injury.

24.3.3.2 Spike 1 g of corn oil with 1 mL of the LCS standard mixture as described in the instructions provided with the LCS mixtures. Use syringes to perform the spiking to ensure accuracy. Add the SMC and mix and carry through the extraction and clean-up process as described in paragraphs 13.4.3 to 13.4.5.

24.3.3.3 Nominal LCS target compound concentrations are as follows:

Acenaphthylene	54,000 µg/Kg
Anthracene	78,000 µg/Kg
Benzo(a)anthracene	52,000 µg/Kg
Benzo(b)floranthene	68,000 µg/Kg
Benzo(g,h,i)perylene	36,000 µg/Kg
Chrysene	43,000 µg/Kg
Dibenz(a,h)anthracene	43,000 µg/Kg
Naphthalene	90,000 µg/Kg
Phenanthrene	41,000 µg/Kg

24.4 Technical Acceptance Criteria

24.4.1 All LCS compounds must have recoveries between 30 and 130 percent. Up to two LCS compounds may, however, exceed the upper recovery criterion of 130 percent.

24.4.2 All LCS target compound absolute and relative retention times must be within the windows established during the initial calibration.

24.4.3 The RT of the SMC must be within ± 1.0 percent of the mean RT of the SMC established during the initial calibration.

24.4.4 The SMC advisory recovery criterion is 50-150 percent. The SMC recovery in the LCS must, however, be greater than or equal to 20 percent and less than or equal to 200 percent.

24.5 Corrective Action

24.5.1 If any LCS compound recovery is less than 30 percent or more than two LCS compounds exceed 130 percent, the LCS shall be reanalyzed. If, upon reanalysis, more than two LCS target compounds are outside the recovery criterion, the LCS and all associated field and QC samples shall be reextracted and reanalyzed. If one or two LCS compounds are outside the recovery criterion, proceed with sample analyses, and flag all sample results of compounds that were out in the LCS with an "L" flag.

24.5.2 If the recovery of the SMC is less than 20 percent, greater than 200 percent, or peak interferences are present in the LCS, sample analysis shall be stopped and the LCS reanalyzed. If the LCS SMC recovery is still outside the criterion upon reanalysis, corrective action shall be performed, and the LCS and all associated samples reextracted and reanalyzed.

24.5.3 If the RT or RRT for any LCS compound is not within the RT and RRT windows established during the initial calibration, reanalyze the LCS. If upon reanalysis a compound is still outside the windows, a new initial calibration must be performed before samples can be analyzed. The instrument must be recalibrated as described in paragraph 8.

24.5.4 If the RTS criterion is not met for the LCS, sample analysis shall be stopped and the noncompliant LCS reanalyzed. If the RTS is still outside the criterion upon reanalysis, corrective action shall be performed, which may include a new initial calibration. DO NOT proceed with sample analyses until the RTS is within ± 1.0 percent.

24.5.5 All LCS technical acceptance criteria shall be met before any samples or required blanks are analyzed. Any samples or required blanks analyzed when the LCS criteria have not been met shall require reextraction and/or reanalysis at no additional cost to the Agency.

24.6 Documentation

Laboratory Control Sample results are reported on Forms QI-PAH, QII-PAH, and QVI-PAH. Reporting requirements are listed in Exhibit B.

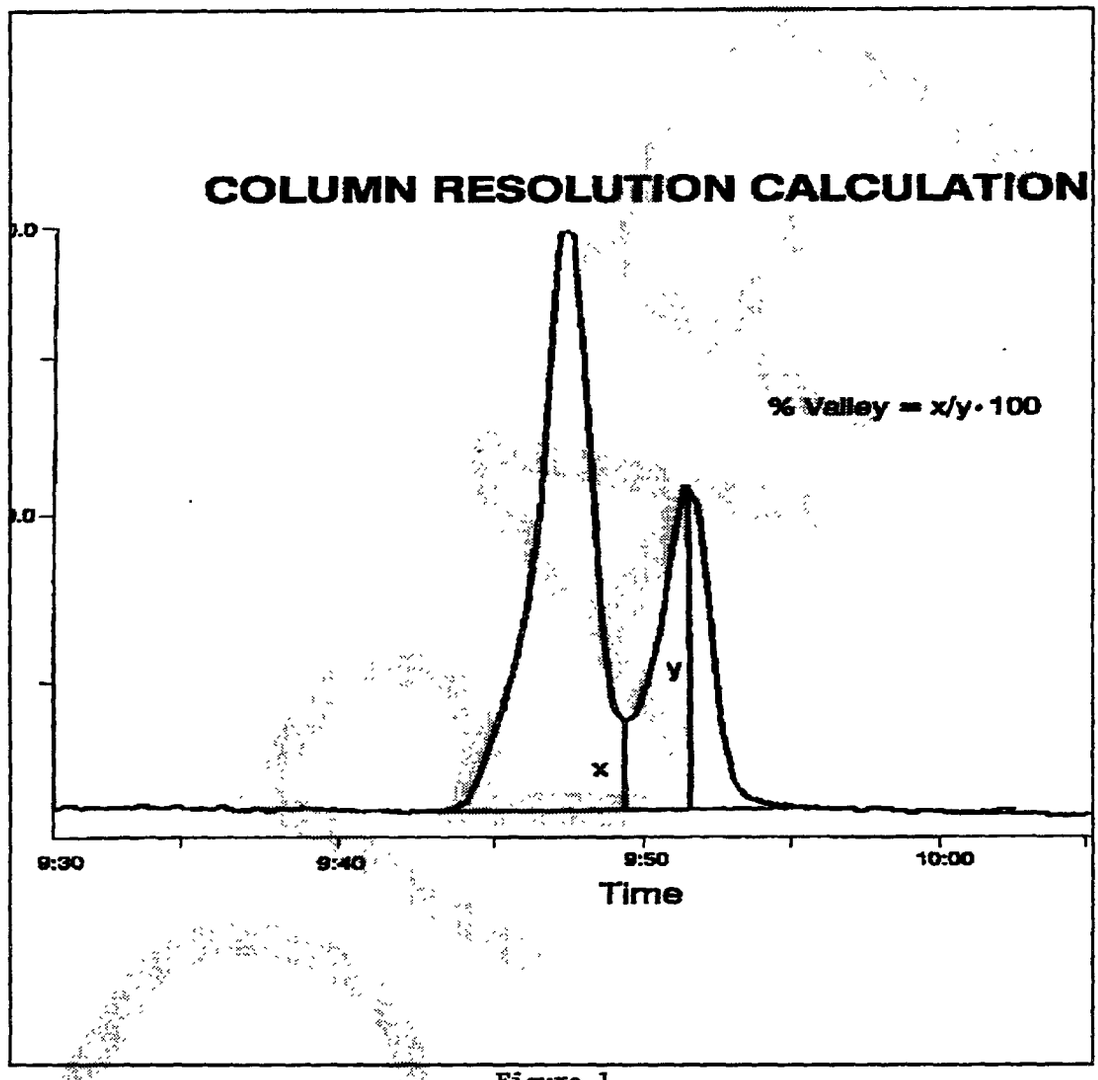
COLUMN RESOLUTION CALCULATION
% Valley = x/y · 100
x
y
9:30
9:40
9:50
10:00
Time

Figure 1

Table 1.

List of PAH Compounds in Order of Elution*

Compound	Retention Time (mins)
Naphthalene	5.71
Acenaphthylene	8.89
2-Bromonaphthalene(SMC)	9.14
Acenaphthene	9.26
Fluorene	10.23
Phenanthrene	11.99
Anthracene	12.07
Fluoranthene	14.22
Pyrene	14.60
Benz(a)anthracene	16.71
Chrysene	16.99
Benzo(b)fluoranthene **	18.87
Benzo(k)fluoranthene **	
Benzo(a)pyrene	19.32
Indeno(1,2,3-cd)pyrene	21.08
Dibenz(a,h)anthracene	21.18
Benzo(g,h,i)perylene	21.52

* This elution order is given as general guidance and is based on suggested instrumental operating conditions as given in paragraph 7.

** Benzo(k)fluoranthene coelutes with Benzo(b)fluoranthene. The sum of both Benzofluoranthenes will be measured and quantitated using the calibration factor of the b isomer.

EXHIBIT D

QUICK TURNAROUND METHODS

ANALYTICAL METHOD FOR PHENOLS (PHENs)

TABLE OF CONTENTS
PHENOLS

SECTION		Page
I	Introduction	D-3
II	Sample/Extract Storage and Turnaround Times and Equipment and Standards	D-4
1	Sample/Extract Storage and Turnaround Times	D-4
2	Summary of Method	D-4
3	Interferences	D-5
4	Apparatus and Materials	D-6
5	Reagents	D-11
6	Standards	D-12
III	Instrument Quality Control Procedures and Requirements	D-16
7	Instrument Operating Conditions	D-16
8	Calibration of the GC System - Initial Calibration	D-17
9	Calibration of the GC System - Calibration Check	D-21
10	Calibration of the GC System - PVS	D-24
11	System Performance - GC Resolution	D-28
IV	Sample Analysis and Compound Identification and Quantitation	D-30
12	Summary	D-30
13	Phase Separation	D-31
14	Solvent Extraction and Cleanup	D-31
15	Solid Phase Extraction and Cleanup	D-35
16	Sample Preparation and Extraction - Oil Samples	D-38
17	Sample Preparation and Extraction - Wipe Samples	D-39
18	Instrumental Analysis	D-41
19	Dilutions	D-43
20	Identification of Target Compounds	D-45
21	Calculations	D-46
22	Technical Acceptance Criteria	D-48
23	Corrective Action	D-49
24	Documentation	D-50
V	Sample Quality Control Procedures and Requirements	D-51
25	Method Blank Analysis	D-51
26	Instrument Blank Analysis	D-54
27	Laboratory Control Samples	D-57

SECTION I

INTRODUCTION

This Quick Turnaround Method (QTM) is designed for use in determining the concentration of various phenolic compounds in water, soil/solid, oil, and wipe samples. Exhibit C lists the compounds that will be determined by this method along with the Contract Required Quantitation Limits (CRQLs). The method yields identification and quantitation of the analytes listed in Exhibit C using single column gas chromatography/flame ionization detector (GC/FID) or gas chromatography/photoionization detector (GC/PID). Target compound concentrations in samples are reported on an "as-received" basis; no dry weights are calculated. The primary objective of this QTM is to provide analytical data in a timely manner for decision-making during site inspections, remediations, and emergency removal activities. The phenol QTM is to be used when rapid data turnaround is required, when the data requestor knows of (or strongly suspects) the presence of phenol contamination, and there is knowledge regarding potential matrix interferences at the site. The QTM is not equivalent to, nor a replacement for, the CLP Organics Multi-Media Multi-Concentration Analysis.

SECTION II

SAMPLE/EXTRACT STORAGE AND TURNAROUND TIMES AND EQUIPMENT AND STANDARDS

1 Sample/Extract Storage and Turnaround Times

1.1 Procedures for Sample Storage

Samples shall be protected from light and refrigerated at 4°C (± 2°C) from the time of receipt until 60 days after delivery of a complete data package to the Agency.

1.2 Procedure for Sample Extract Storage

Sample extracts shall be protected from light and stored at 4°C (± 2°C) for 21 days after delivery of a complete data package to the Agency.

Samples, sample extracts, and standards shall be stored separately.

1.3 Contract Required Sample Turnaround Times

Samples shall be extracted, analyzed, and a summary of the analytical and QC data shall be reported to the appropriate EPA Region via telecommunications network within 48 hours (or 72 hours if more than three fractions are analyzed) of Validated Time of Sample Receipt (VTSR). See Exhibits A and B for specific instructions concerning sample turnaround time and data reporting requirements.

2 Summary of Method

2.1 This analytical method is a GC/FID or GC/PID method for the analysis of phenols in water, soil/solid, oil, and wipe samples. All target compounds and the System Monitor Compound (SMC) shall be extracted from field and QC samples utilizing either solvent or solid phase extraction (SPE). If solvent extraction is utilized, field and QC samples are serially extracted using two 10 mL portions of methylene chloride ($MeCl_2$) under basic and acidic conditions. If SPE is utilized, field and QC samples are passed through a disk containing a solid matrix (e.g., silica) coated with a chemically bonded styrene divinyl benzene (SDB) organic phase (or equivalent). The target compounds and SMC are then eluted from the extraction disk with methylene chloride.

2.2 Sample analyses shall be performed using gas chromatographic techniques within a contract-specified analytical sequence that shall not exceed 24 hours. Target compounds are identified and quantitated on the basis of retention time windows and calibration factors established during initial calibration. During initial calibration, a mean relative

retention time ($\overline{RRT}$), a mean retention time ($\overline{RT}$), and an identification window (± 0.008 RRT unit of the mean RRT or ± 1.0 percent of the mean RT) is established for each compound. Mean calibration factors are also established during the initial calibration and the percent relative standard deviation (%RSD) of the calibration factors for each target compound and the SMC must be less than or equal to 25.0 percent. Sample compound concentrations are calculated from the initial calibration using the average of the three calibration factors, using the mid point calibration factor (if it is within ± 10 percent of the average of the high and low calibration factors), or using line segments (K Curve).

2.3 A check of the initial calibration shall be performed no less than every 24 hours by the analysis of the mid point standard. All calibration factors calculated from the calibration check standard must be within ± 35.0 percent of the mean calibration factor calculated from the initial calibration for each target compound and the SMC.

2.4 An analytical sequence also includes method blanks and instrument blanks in which no compound can be observed at signals greater than one-half the response in the corresponding RRT window of the initial calibration low concentration standard. The analytical sequence shall also include the analysis of Laboratory Control Samples (LCS) and Performance Verification Standards (PVS). The LCS will be a "go/no-go" analysis. That is, if the LCS meets performance criteria as stated in paragraph 27, sample analysis may proceed. If, however, the LCS does not meet acceptance criteria, corrective action must be taken before sample analyses are performed. The PVS is two times the concentration of the low calibration standard and shall be analyzed at least once during each analytical sequence to verify instrument performance. All samples shall be bracketed by valid PVS analyses or a valid initial calibration or a valid calibration check standard and a valid PVS.

2.5 A System Monitor Compound (SMC) shall be added to all field and QC samples and standards. The SMC is used as a retention time marker to calculate RRTs for the identification of target compounds and to assess extraction efficiency. When the recovery of the SMC in a field sample is less than 10 percent, greater than 200 percent, or if peak interferences are present, absolute retention times are used for target compound identification. The SMC recovery criterion of 50-150 percent is advisory only. Reanalysis of samples are not performed if the SMC recovery in the sample is outside the advisory limits.

3 <u>Interferences</u>

3.1 Polynuclear aromatic hydrocarbons may be present with phenols in some samples. Retention times for target PAHs are given in Table 2 using the GC conditions specified in Section III.

3.2 A number of method interferences may affect quantitative determination of phenolic compounds using this method. The FID detector is relatively

nonspecific; it will respond to all molecules containing carbon-hydrogen bonds including phthalate esters and PAHs. It is incumbent on the data requestor to establish that phenols on the Target Compound List (TCL) are the primary extractable contaminants at a site before using this method to establish their concentration.

3.3 Degradation of phenols will occur if the GC injection port becomes contaminated with nonvolatile residues. Low recoveries of the LCS and PVS compounds may indicate injection port contamination. Analysts must clean or replace injection ports if this contamination occurs. Analysis of colored extracts or samples from contaminated sites may require more frequent GC maintenance.

5.4 The analytical system must be demonstrated to be free from contamination under conditions of the analysis by analyzing method blanks. Cross-contamination problems can be minimized by analyzing instrument blanks after samples with high levels of target compounds or other interferents (see paragraph 26).

4 Apparatus and Materials

Brand names, suppliers, and part numbers are for illustrative purposes only. No endorsement is implied. Equivalent performance may be achieved using apparatus and materials other than those specified here; however, demonstration of equivalent performance meeting the requirements of this SOW is the responsibility of the Contractor.

4.1 Gas Chromatograph - The gas chromatography (GC) system shall be capable of temperature programming and flow control that is stable throughout an analytical sequence. The system shall be suitable for splitless or on-column injection and have all required accessories, including syringes, analytical columns, and gases. All GC carrier gas lines shall be constructed from stainless steel or copper tubing. Non-polytetrafluoroethylene (PTFE) thread sealants, or flow controllers with rubber components shall not be used.

4.1.1 Gas Chromatography Column - 15 m x 0.53 mm ID bonded phase silicone coated fused silica capillary column (Supelco SPB-5, J&W DB-5, Restec, or equivalent). A film thickness of 0.25 - 1.0 μm is recommended.

NOTE: The use of a guard column is also recommended.

4.1.2 Chromatography Detector - The GC shall be equipped with an FID or a PID.

4.1.3 Gas chromatography injector - A deactivated injector specifically designed for use with 0.53 mm ID columns shall be used for collecting data with this method. The Laboratory shall establish which of the various injector liner design provides optimum

performance with their specific GC hardware. Laboratories that have difficulty using this method shall investigate the use of injector liners with shapes or dimensions optimized to reduce injection flashback and analyte pyrolysis.

4.2 Data System - The GC shall be linked to a data system capable of integrating peak areas for any compound detected at or above one-half the CRQL, providing retention time labeling, and relative retention time comparison. It is required that the Laboratory be equipped with a PC- or microcomputer-based GC data collection and reduction system for this purpose. The Laboratory shall possess this equipment to provide the quick turnaround of electronic data. The Laboratory shall also be equipped with a microcomputer and contract-specified hardware and software to electronically transfer the QTM data to the Regions.

4.3 Solid Phase Extraction Disk Processing Station - As SPE is a developing area in environmental chemistry, EPA expects that advances will occur within the lifetime of the QTM contracts. Therefore, the brand names listed below are included for illustration purposes only. Any comparable equipment is acceptable, regardless of brand.

4.3.1 Extraction disks - Disks shall be made of Teflon and include at least 500 mg of styrene divinyl benzene (SDB) bonded silica (Varian/3M Empore™, or equivalent). Disks shall be 47 mm in diameter. (Note: an alternative phase may be used if this phase can be demonstrated to meet the QA/QC requirements of this method.)

4.3.2 Vacuum holder - The vacuum holder will be glass and comprised of five (5) parts: the vacuum head, the sample reservoir, a metal clip to hold the reservoir to the head, a large volume receiver (greater than 200 mL) for the sample after elution, and a small volume receiver (10-20 mL) for the solvent after extraction. The vacuum holder (except for the solvent receiver) is sold as a HPLC solvent filtration device (Gelman 4012, or equivalent). The solvent receiver is simply a tube with a ground glass fitting that fits onto the vacuum head.

4.3.3 Vacuum manifold - A 4- to 6-port vacuum manifold may be used to facilitate simultaneous disk extractions.

4.3.4 Use of depth filter (Whatman Multigrade GMF 150, or equivalent) or inert materials such as Celite 545 (diatomaceous earth, Baker #, or equivalent) are encouraged when samples contain particulates. If depth filters are utilized, each lot shall be tested for contamination prior to use with this method. The depth filters may be checked in conjunction with the SPE disks (depth filters are placed on top of the SPE disks) by following the procedure outlined in paragraph 4.3.5.

4.3.5 Solid Phase Extraction (SPE) Recovery Check

4.3.5.1 Summary

Before field or QC samples are extracted using the SPE disks, their efficiency shall be verified. An extraction recovery and contamination check shall be performed in order to evaluate the recovery of compounds on the disk, and to check for contamination.

4.3.5.2 Frequency

A check shall be performed on each individual lot of disks, and for every 300 units of a particular lot.

4.3.5.3 Procedure

4.3.5.3.1 Before samples are extracted using a lot of SPE disks, the Laboratory shall perform a recovery check of that lot. Two (2) check solutions shall be prepared. The first is 100 mL of reagent water spiked with 1 mL of the low initial calibration standard (to demonstrate lack of contamination), and the second is 100 mL of reagent water spiked with 1 mL of the high initial calibration standard (to demonstrate adequate SPE capacity).

4.3.5.3.2 The low and high SPE recovery check standard solutions used to evaluate SPE disks are prepared by diluting the original stock calibration solution in methanol. The low and high SPE recovery standard concentrations are equivalent to the low and high calibration standard mix concentrations respectively. Laboratories shall prepare the SPE recovery check standards in methanol and add 1 mL of each calibration solution to 100 mL of reagent water. If the Laboratory experiences solubility problems in preparing the SPE recovery check standard solution, the Laboratory shall prepare the SPE recovery check standards in methanol, add 1 mL of each calibration solution to 4 mL methanol, and add the resulting solution to 100 mL of reagent water. The recovery check samples shall be prepared and

analyzed according to the procedures in Section IV.

4.3.5.3.3 The SPE recovery check standard solutions shall be analyzed in a valid initial calibration or daily calibration analytical sequence (see paragraph 18.1). Note: if the SPE recovery check standards are the only samples analyzed in the analytical sequence, the method blank shall be replaced with an instrument blank and the LCS shall be prepared by diluting 100 µL of LCS stock mixture into 5 mL of hexane and concentrating to 1mL using nitrogen blowdown. The EPA identification numbers for standards as described in Exhibit B shall be used for the low and high SPE recovery check standard solutions (i.e., QPHSTD####, where #### is the amount injected). The EPA identification numbers as described in Exhibit B shall be used for this instrument blank and LCS.

4.3.5.4 Technical Acceptance Criteria

The recovery of the check compounds spiked at the upper limit of the calibration range must demonstrate recovery of 30-110 percent to establish that the SPE media has the capacity to retain compounds at the upper end of the calibration range (i.e. no breakthrough of target compounds is occurring). The recovery check at the low concentration level shall be evaluated to demonstrate that the system performs at low levels and does not introduce method interferences. If any compound recovery is less than 30 percent, or is greater than 110 percent, then that lot of disks shall not be used.

4.3.5.5 Corrective Action

If the disks do not exhibit acceptable recovery of any spiked compound at the low or high concentration levels, the entire lot shall not be used to extract samples, since the system cannot be demonstrated to be functioning at those levels.

4.3.5.6 Documentation

All data and related documentation for the SPE recovery check analysis shall be maintained by the

Laboratory during the term of the contract and shall be available to the Agency during on-site laboratory evaluations or if requested by the TPO or APO.

4.4 Glassware - Sufficient glassware to meet contract requirements shall be reserved for exclusive use in support of this contract.

4.4.1 Erlenmeyer Flasks - 50 and 125 mL.

4.4.2 Beaker - 150 mL.

4.4.3 Concentrator tubes - 10 mL.

4.4.4 Kimax concentrator tube (graduated) - 25 mL.

4.4.5 Graduated test tubes - graduated from 1 to 10 mL.

4.4.6 Autosampler vials - appropriate for the GC system.

4.4.7 Wide-mouth centrifuge tubes (optional).

4.4.8 Powder funnel - 6 cm (60°).

4.4.9 Centrifuge tubes - 40 mL.

4.4.10 Pasteur Pipets.

4.4.11 Buchner funnel.

4.5 Laboratory Hardware - The following equipment is required for sample preparation:

4.5.1 Ultrasonic Cell Disrupter - Heat Systems Ultrasonics, Inc. Model W-385 Sonicator (475 watt with pulsing capability, No. 200 1/2" tapped disrupter horn plus No. 419 1/8" standard tapered microtip probe), or equivalent device with a minimum of 375 watt output capability. The 1/8" microtip shall be used for extraction of all soil samples. (NOTE: In order to ensure that sufficient energy is transferred to the sample during the extraction, the microtip probe <u>must</u> be replaced if the tip begins to erode. Erosion of the tip is evidenced by a rough surface.)

4.5.2 Balance - Calibrated and accurate to 0.1 g.

4.5.3 Balance - Calibrated and accurate to 0.1 mg.

4.5.4 Centrifuge.

4.5.5 Microsyringe - 10-μL, 50-μL, and 100-μL.

4.5.6 Spatula - Stainless steel.

4.5.7 Hot plate stirrer.

4.5.8 Teflon coated magnets.

4.5.9 Glass wool.

4.5.10 Whatman #42 filter paper.

4.5.11 Whatman vacuum holder.

4.5.12 Nitrogen blowdown apparatus.

4.5.13 Water bath.

4.5.14 pH paper or meter.

5 Reagents

5.1 Reagent water - Reagent water is defined as water in which target compounds or potentially interfering compounds do not produce a signal greater than one-half the response in the corresponding RRT window of the initial calibration low concentration standard. Reagent water shall be generated by one of the following methods.

5.1.1 Reagent water may be generated by passing tap water through a carbon filter bed containing approximately 500 g of activated carbon (Calgon Corp., Filtrasorb-300, or equivalent).

5.1.2 Reagent water may be generated using a water purification system (Millipore-O-Plus with Organex Q cartridges, or equivalent).

5.1.3 Reagent water may prepared by boiling for 15 minutes then bubbling contaminant-free inert gas through the water for one hour while maintaining the water temperature at 90°C. While still hot, transfer the degassed water to a narrow-mouth screw-cap bottle, seal with a Teflon-lined septum, and cap.

5.2 Solvents - Acetonitrile, acetone, methylene chloride, and methanol (pesticide quality, or equivalent).

5.3 Sodium hydroxide solution (0.5 N).

5.4 Hydrochloric acid solution (0.5 N).

5.5 5:100 methanol/water solution.

5.6 50:50 methylene chloride/acetone solution.

5.7 Powdered Anhydrous Sodium sulfate.

5.8 Sodium chloride.

5.9 9:1 acetonitrile/acetone solution.

5.10 Corn oil.

6 Standards

6.1 Stock Standard Solutions

Stock solutions may be prepared from pure standard materials or purchased as certified solutions. Standard solutions shall be prepared by dissolving pure standards in a suitable solvent in volumetric flasks. The addition of toluene may be necessary to dissolve some of the target compounds in highly concentrated stock standards. When compound purity is assayed to be 96 percent or greater, the weight may be used without correction to calculate the concentration of the stock standard. Exhibit E, Section V provides further directions for preparing and verifying the integrity of stock standard solutions.

6.2 Secondary Dilution Standards

6.2.1 Using stock standard solutions, prepare secondary dilution standards in acetonitrile if SPE is used for sample preparation or methylene chloride if solvent extraction is used for sample preparation.

6.2.2 Secondary dilution standards shall be stored at 4°C (± 2°C) with minimal headspace and checked frequently for signs of degradation or evaporation. These procedures are especially important just prior to preparing calibration standards from them.
NOTE: Standards shall not be stored in volumetric flasks, especially when they are prepared with solvents with low boiling points.

6.3 Calibration Standards

6.3.1 Calibration standard mixtures shall be prepared at three concentration levels in volumetric flasks and diluted to final volume with methylene chloride if SPE is used for sample preparation or hexane if solvent extraction is used for sample preparation. The low concentration standard as specified in paragraph 6.3.2 achieves the sample extract compound concentrations equivalent to the sample compound CRQLs as listed in Exhibit C (see paragraphs 14.1.17, 14.2.22, and 15.5.8). The high concentration level shall be near the upper end of the linear range. The compounds and concentrations used for these calibration mixtures are presented in paragraph 6.3.2. NOTE: The

high level standard concentrations are the minimum required under this method. The Laboratory may prepare standards at higher concentration levels as long as the %RSD criteria are met.

6.3.2 Phenols calibration standard mix concentrations.

Calibration Ranges (µg/mL)

Compound	Low	Mid	High
Phenol	5.0	50	250
2-Chlorophenol	5.0	50	250
o-Cresol	5.0	50	250
m-Cresol*	5.0	50	250
2-Nitrophenol	5.0	50	250
2,4-Dimethylphenol	5.0	50	250
2,4-Dichlorophenol	5.0	50	250
4-Chloro-3-Methyl Phenol	5.0	50	250
2,4,6-Trichlorophenol**	5.0	50	250
2,4-Dinitrophenol	5.0	50	250
4-Nitrophenol	5.0	50	250
2,3,4,6-Tetrachlorophenol	5.0	50	250
4,6-Dinitro-2-methylphenol	5.0	50	250
Pentachlorophenol	5.0	50	250
o-Bromophenol (SMC)	5.0	50	250

* Compounds coelute, report the total in terms of total Cresol. Quantitation will be based on the calibration factor of m-Cresol.

** Compounds coelute, report the total in terms of 2,4,6/2,4,5-Trichlorophenol. Quantitation will be based on the calibration factor of 2,4,6-Trichlorophenol.

6.3.3 All standards shall be stored at 4°C (± 2°C) in Teflon-sealed amber glass bottles. Calibration solutions shall be replaced after 6 months, or sooner if comparison with check standards indicates a problem. **CAUTION: Phenols are particularly susceptible to photodegradation.**

6.4 Calibration Check Standard

The calibration check is a daily one-point check on the initial calibration. The calibration check standard shall be prepared in a volumetric flask and diluted to final volume with acetonitrile if SPE is used for sample preparation or hexane if solvent extraction is used for sample preparation. The concentration of the calibration check standard is the same as the mid level standard used in the initial calibration.

6.5 System Monitor Compound

The System Monitor Compound (SMC), o-Bromophenol, shall be employed to detect retention time shifts (RTS) of eluting compounds. Additionally, the same compound shall be used to monitor the extraction efficiency. The Laboratory shall prepare a solution in methanol containing o-Bromophenol at a concentration of 2 mg/mL. The Laboratory shall add 25 µL of this standard to a 100-mL water sample, or 25 µL to 6 grams of soil. For oil analysis, prepare o-Bromophenol at a concentration of 50 µg/mL and add 1 mL of this solution to 1 g of oil sample (see section IV.)

6.6 Performance Verification Standard

The Performance Verification Standard (PVS) shall be analyzed at least once during each analytical sequence to assess system stability. The PVS is two times the concentration of the low level calibration standard.

6.7 Laboratory Control Sample

Laboratory Control Samples (LCS) containing known amounts of target compounds traceable to primary standards will initially be supplied by the Agency. Following receipt of these initial supplies, however, the Laboratory shall prepare its own LCS standards. The LCS shall be spiked into a clean matrix and prepared using all steps of this protocol. An appropriate amount of the LCS shall be added to reagent water and analyzed with each Batch of water samples. An appropriate amount of the LCS shall be added to clean quartz sand and analyzed with each Batch of soil/solid samples. An appropriate amount of the LCS shall be added to clean corn oil and analyzed with each Batch of oil samples. If a Batch contains water, soil/solid, and oil samples, an LCS shall be prepared and analyzed for each matrix. Note: If wipe sample analyses are performed, the Agency will provide the Laboratory with further instructions for the preparation and analysis of LCSs for wipe samples. All LCS compounds must have recoveries between 30 and 130 percent before sample analysis may begin (see paragraph 27).

NOTE: The Laboratory is expected to maintain control charts of the recoveries of at least three representative LCS compounds as an internal QC procedure.

6.8 Storage of Standard Solutions

6.8.1 Stock, secondary standard solutions, and working standard solutions shall be stored at 4°C (± 2°C) in Teflon-lined screw-cap amber bottles (also see paragraph 6.3.3).

6.8.2 All standards shall be protected from light. **CAUTION: Phenols are particularly susceptible to photodegradation.**

6.8.3 Samples, sample extracts, and standards shall be stored separately.

SECTION III

INSTRUMENT QUALITY CONTROL PROCEDURES AND REQUIREMENTS

7 Instrument Operating Conditions

The following are the suggested gas chromatographic analytical conditions.

Column: DB-5 (J&W Scientific), or equivalent, 15-m x 0.53-mm ID, 0.25 to 1.0 µm film thickness

Carrier Gas:	Helium
Flow Rate:	5 - 7 mL/min
Injector Temperature:	200°C *
Detector Temperature (FID):	300°C
Detector Temperature (PID):	300°C **
Initial Temperature:	65°C
Initial Hold Time:	3 min
Initial Ramp Rate:	10°C /min
Intermediate Temperature:	185°C
Intermediate Hold Time:	1 min
Ramp Rate 2:	30°C/min
Final Temperature:	275°C
Final Hold Time:	5 min

* Cold on-column injectors that allow injection directly into 0.53 mm ID columns may be used for this method as long as the column resolution criteria in paragraph 11 are met.

** Or as specified by the manufacturer. The detector temperature shall be sufficiently higher than the final column temperature to prevent phenols from condensing on the detector.

FID requires hydrogen and air supplies to the detector according to manufacturer's specifications.

The PID requires a 10.2-ev bulb.

The Laboratory shall note in the Batch Narrative the detector type used.

NOTE: The typical run time under these conditions is 25 minutes. It may be necessary to adjust GC conditions on individual instruments to optimize compound separation. It may be necessary to adjust detector conditions to optimize instrument sensitivity.

8 Calibration of the GC System - Initial Calibration

8.1 Summary

8.1.1 Prior to the analysis of samples and required blanks, each GC system must be initially calibrated to ensure that the instrument meets the minimum performance requirements of the method. The initial calibration is accomplished by analyzing three standards; the low level, mid level, and high level mixtures as specified in paragraph 6.3.2. The technical acceptance criteria for the initial calibration are given in paragraph 8.5. The initial calibration shall be used to establish the calibration factors used for compound quantitation, to define the retention time windows for compound identification, and to determine the mean SMC retention time for evaluating SMC shift during analyses. Detector response must be linear for all target compounds. All samples shall be analyzed during the contract specified 24-hour analytical sequence.

8.1.2 Sample quantitation shall be based on the mean compound calibration factor, line segments ("K" curve), or the mid level calibration factor from the initial calibration. (The use of the line segment or "K" curve is suggested.) All field and QC samples and standards within a Batch and all field and QC samples and standards analyzed in the same analytical sequence shall be quantitated using the same quantitation method.

8.1.3 Compound identification shall be based on RRT windows established during initial calibration in all field samples where the SMC recovery is greater than or equal to 10 percent and less than or equal to 200 percent.

8.1.4 Compound identification shall be based on absolute retention time windows established during initial calibration in all field samples where the SMC recovery is less than 10 percent, greater than 200 percent, or if peak interferences are present.

8.1.5 Shifts in the chromatographic peaks shall be evaluated by comparing the RT of the SMC in all analyses with the mean RT of the SMC calculated from the initial calibration. The retention time shift is referred to as RTS or RT %D (see paragraph 21.4.1). The RT of the SMC for field and QC sample analyses must be within ± 1.0 percent of the mean RT calculated from the initial calibration.

8.2 Frequency

8.2.1 An initial three-point calibration shall be performed to determine the linearity of response of all target compounds and the SMC. A new initial calibration is required whenever calibration check

standards or PVSs cannot satisfy QC criteria. A new initial calibration is required whenever major instrument maintenance has been performed such as column or detector replacement. An initial calibration must be performed for each GC and for each chromatographic column which are used to perform these analyses.

8.2.2 An analytical sequence is a contractually-defined sequence of GC analyses which consists of an initial three-point calibration or a valid calibration check, field samples, LCS, method and instrument blanks, PVS, and other QC samples run within a 24-hour period (see paragraph 18 for the required sequence of samples).

8.2.3 Analysis of the initial calibration shall begin with the injection of the high level standard followed by the mid level and low level standards.

8.2.4 The analytical sequence concludes with an acceptable analysis of an instrument blank and a PVS (see paragraph 10).

8.2.5 Samples shall be analyzed only after meeting the technical acceptance criteria for the initial calibration or a valid calibration check standard.

8.3 Procedure

8.3.1 The GC system shall be set up per the requirements of paragraph 7.

8.3.2 Prepare calibration standard solutions containing the SMC and all target compounds using the procedure listed in paragraph 6.3.

8.3.3 The calibration solutions shall be equilibrated to ambient temperature before injection (approximately 1 hour).

8.3.4 Inject between 1 and 5 µL of each calibration standard. The same injection volume shall be used for all calibrations and field/QC sample analyses.

8.4 Calculations

8.4.1 Calculate the calibration factor (ratio of the total peak area or height to the mass injected) for each target compound and SMC in the three initial calibration standard analyses using equation D.1 (EQ. D.1).

$$\textit{Calibration Factor} = \frac{\textit{Total Area of Peak or Peak Height}}{\textit{Mass injected (ng)}} \qquad \text{EQ. D.1}$$

8.4.2 Calculate the mean calibration factor for each target compound and the SMC.

8.4.3 Calculate the %RSD of the calibration factors of the low level, mid level, and high level standards for the initial calibration using the following equation.

$$\%RSD = \frac{SD}{\bar{x}} \times 100 \qquad \text{EQ. D.2}$$

where SD = standard deviation.

Standard deviation is calculated using the following equation.

$$SD = \sqrt{\sum_{i=1}^{N} \frac{(x_i - \bar{x})^2}{N - 1}} \qquad \text{EQ. D.3}$$

where: x_i = individual calibration factor (per compound).

$\bar{x}$ = mean of three initial calibration factors (per compound).

N = number of calibration standards.

Equation D.4 is the general formula for the mean of a set of values.

$$\bar{X} = \sum_{i=1}^{N} \frac{X_i}{N} \qquad \text{EQ. D.4}$$

where: $\bar{X}$ = mean of values.

X_i = value.

N = number of values.

8.4.4 Calculate the RRT for each target compound using the following equation:

$$RRT = \frac{RT_{component}}{RT_{SMC}} \qquad \text{EQ. D.5}$$

8.4.5 Calculate the mean RRT and RT for each target compound by using equation D.4.

8.5 Technical Acceptance Criteria

8.5.1 The %RSD of the calibration factor for each target compound and the SMC in the initial calibration must be less than or equal to 25.0 percent. Up to two target compounds may exceed 25.0 percent RSD, however, all compounds must be less than or equal to 40.0 percent RSD.

8.5.2 The retention time of the SMC in the standards must be within ± 1.0 percent of the mean retention time calculated from the three initial calibration standards.

8.5.3 The peak resolution between o-cresol and m-cresol shall be evaluated in the low level initial calibration standard before proceeding with sample analyses (see paragraph 11 - System Performance).

8.5.4 The chromatographic peak response for all target compounds in the low concentration standard must be greater than 10 percent of full-scale deflection.

8.6 Corrective Action

8.6.1 If the %RSD for more than two compounds in the initial calibration is greater than 25.0 percent <u>or</u> if any compound exceeds 40.0 percent RSD, the instrument has not demonstrated adequate linearity to be used for this method. Corrective action shall be taken and documented.

8.6.2 If the peak resolution criterion is not met, the Laboratory shall perform corrective action and demonstrate adequate resolution before samples can be analyzed.

8.6.3 If the SMC RT is not within ± 1.0 percent of the mean SMC RT calculated from the three initial calibration standards, the Laboratory shall perform corrective action which may include a new initial calibration. Do not proceed with sample analysis until the RTS is within ± 1.0 percent.

8.6.4 If the peak response for any target compound in the low concentration standard is not greater than 10 percent of full-scale deflection, the Laboratory shall perform corrective action and make appropriate adjustments before sample analyses are started, to ensure that all target compound peak responses in the low concentration standard are greater than 10 percent of full-scale deflection.

8.6.5 Corrective action may include optimizing detector linearity by adjusting gas flows (FID), cleaning detector optics (PID), or replacing the bulb (PID). Actions also may include replacing the GC injector liner, column, or the pre-column, removing 0.5 - 1 m of the analytical column, or replacement of the standards.

8.6.6 All initial calibration technical acceptance criteria shall be met before any samples or required blanks are analyzed. Any samples or required blanks analyzed when the initial calibration criteria have not been met shall require reanalysis at no additional cost to the Agency.

8.7 Documentation

Initial calibration results are reported on Forms QIVA-PHEN, QIVB-PHEN, and QVI-PHEN. Reporting requirements are listed in Exhibit B.

9 Calibration of the GC System - Calibration Check

9.1 Summary

A check of the calibration curve shall be performed at the beginning of every 24-hour analytical sequence that includes field sample analyses. This check of the calibration shall be performed using the mid level standard and shall contain all target compounds and the SMC. The percent difference (%D) between the calibration factor in the calibration check standard and the average calibration factor from the initial calibration is calculated for each target compound and the SMC, and must meet the technical acceptance criteria given in paragraph 9.5. The SMC RTS and column resolution must also meet technical acceptance criteria as stated in paragraph 9.5 and paragraph 11, respectively. Only after all these criteria are met can sample analysis begin.

NOTE: Compound identification and quantitation shall be performed based on calibration factors and compound RT and windows established during the initial calibration.

9.2 Frequency

9.2.1 Each GC used for analysis shall be checked to verify the initial calibration for each 24-hour period of operation. This procedure is to ensure that the instrument continues to meet the instrument sensitivity and linearity requirements of this method.

9.2.2 An analytical sequence is a contractually-defined sequence of GC analyses which consists of an initial three-point calibration or a valid calibration check standard, field samples, LCS, method and instrument blanks, PVSs, and other QC samples run within a 24-hour period (see paragraph 18).

9.2.3 The analytical sequence shall be concluded with an acceptable analysis of an instrument blank and a PVS (see paragraph 10).

9.2.4 Samples shall be analyzed only after meeting the technical acceptance criteria for the initial calibration or a valid calibration check standard.

9.3 Procedure

9.3.1 The GC system shall be set up per the requirements of paragraph 7.

9.3.2 Prepare calibration check standard solutions containing the SMC and all target compounds using the procedures listed in paragraph 6.3 and 6.4.

9.3.3 The calibration solutions shall be equilibrated to ambient temperature before injection (approximately 1 hour).

9.3.4 Inject between 1 and 5 μL of the mid level standard. The same injection volume shall be used for all calibrations and field/QC sample analyses.

9.4 Calculations

9.4.1 Calculate the calibration factor (ratio of the total peak area or height to the mass injected) for each target compound and the SMC in the calibration check standard mixture using the following equation.

$$\textit{Calibration Factor} = \frac{\textit{Total Area of Peak or Peak Height}}{\textit{Mass injected (ng)}} \qquad \text{EQ. D.6}$$

9.4.2 Calculate the %D between the calibration factors from the calibration check standard and the average calibration factors from the initial calibration using the following equation.

$$\%D = \frac{\bar{x} - x_c}{\bar{x}} \times 100 \qquad \text{EQ. D.7}$$

where,

$\bar{x}$ = mean of three initial calibration factors (per compound).

x_c = calibration factor from current calibration check standard (per compound).

9.5 Technical Acceptance Criteria

9.5.1 The %D between the calibration factors for each target compound and SMC in the calibration check standard and the mean calibration factor for that compound in the initial calibration must be within ± 35.0 percent. Up to two target compounds may exceed ± 35.0 %D, however, all compounds must be within ± 45.0 %D.

9.5.2 All target compound absolute and relative retention times must be within the windows established during the initial calibration. Report calibration check RT and RRT data on Form QI-PHEN (see Exhibit B).

9.5.3 The retention time of the SMC in the calibration check standard must be within ± 1.0 percent of the mean SMC retention time calculated from the three initial calibration standards.

9.5.4 The peak resolution between o-cresol and m-cresol shall be evaluated in the calibration check standard before proceeding with sample analyses (see paragraph 11 - System Performance).

9.6 Corrective Action

9.6.1 If the %D for more than two compounds is not within ± 35.0 <u>or</u> if any compound is not within ± 45.0 %D, reanalyze the calibration check standard. If upon reanalysis any compound is still outside the criteria, a new initial calibration shall be performed before samples can be analyzed. The instrument must be recalibrated as described in paragraph 8.

9.6.2 If the RT or RRT for any compound is not within the RT and RRT windows established during the initial calibration, reanalyze the calibration check standard. If upon reanalysis a compound is still outside the windows, a new initial calibration must be performed before samples can be analyzed. The instrument must be recalibrated as described in paragraph 8.

9.6.3 If the SMC RTS is not within ± 1.0 percent of the mean SMC RT calculated from the initial calibration, the calibration check standard shall be immediately reanalyzed. If the RTS is still outside the criterion upon reanalysis, corrective action shall be performed, which may include a new initial calibration. DO NOT proceed with sample analyses until the SMC RTS is within ± 1.0 percent.

9.6.4 If the peak resolution criterion is not met, the Laboratory shall perform corrective action and demonstrate adequate resolution before samples can be analyzed.

9.6.5 All calibration check technical acceptance criteria shall be met before any samples or required blanks are analyzed. Any samples or required blanks analyzed when the calibration check criteria have not been met shall require reanalysis at no additional cost to the Agency.

9.7 Documentation

Calibration check results are reported on Forms QI-PHEN, QV-PHEN, and QVI-PHEN. Reporting requirements are listed in Exhibit B.

10 Calibration of the GC System - Performance Verification Standard (PVS)

10.1 Summary

A PVS shall be analyzed at the end of every 24-hour analytical sequence. The analysis of the PVS shall be started within 24 hours after the injection of the first initial calibration standard or the instrument blank analyzed before a valid calibration check standard. The PVS is two times the concentration of the low level standard from the initial calibration (see paragraph 6.3.2).

10.2 Frequency

An acceptable PVS must be analyzed at the conclusion of the analytical sequence. The PVS analysis shall be started within 24 hours after the injection of the first initial calibration standard or the instrument blank analyzed before a valid calibration check standard. If a successful PVS analysis is not obtained at the conclusion of the analytical sequence, all samples analyzed since the last successful PVS, initial calibration, or valid calibration check standard shall be reinjected and reanalyzed in a valid analytical sequence at no additional expense to the Agency. The Laboratory is encouraged to run additional PVS analyses during an analytical sequence to minimize unpaid reanalyses. If an acceptable PVS is analyzed during an analytical sequence, the Laboratory may continue to collect data under the current calibration until the conclusion of the current 24-hour sequence. If at any time an unsuccessful PVS analysis is made, the Laboratory shall stop sample analysis and immediately reanalyze the PVS. If on reanalysis the PVS is still outside QC criteria, the Laboratory shall take corrective action and recalibrate the GC (run a new initial calibration) prior to reinitiating sample analyses. Recalibration will begin a new analytical sequence.

10.3 Procedure

10.3.1 The GC conditions shall be the same as those used for analyzing samples.

10.3.2 The PVS is two times the concentration of the low level standard from the initial calibration (see paragraph 6.3.2).

10.3.3 The PVS solution shall be equilibrated to ambient temperature prior to injection (approximately 1 hour).

10.3.4 The same injection volume shall be used for all field and QC samples and standards including the PVS.

10.3.5 The recovery of each compound and the SMC in the PVS is quantitated using the mean calibration factor, the mid point, or by using a K curve established during the initial calibration. NOTE: Only one method of quantitation shall be used for analyses within a given analytical sequence and for a given Batch of samples.

10.4 Calculations

The amount of PVS compounds and the SMC recovered shall be calculated using the following equations.

$$Amount\ Observed = \frac{A_x}{CF_m} \qquad \text{EQ. D.8}$$

Where: A_x = area or peak height of the PVS compound or SMC.

CF_m = calibration factor established by one of three techniques during the initial calibration (see paragraph 21).

$$Amount\ Recovered = \frac{Amount\ Observed\ (ng)}{Amount\ Added\ (ng)} \times 100 \qquad \text{EQ. D.9}$$

10.5 Technical Acceptance Criteria

10.5.1 All PVS target compounds must have a calculated recovery of 75-125 percent in order to report data without flags.

10.5.2 If recovery of a PVS compound is not within 75-125 percent but still within an expanded recovery window of 50-150 percent, the associated sample analyses results shall be flagged (see paragraph 10.6).

10.5.3 The SMC recovery criterion of 50-150 percent is advisory only. Reanalysis of the PVS is not performed if the SMC

recovery is outside the advisory recovery limits. The SMC recovery in the PVS must, however, be greater than or equal to 20 percent and less than or equal to 200 percent (see paragraph 10.6).

10.5.4 All target compound retention and relative retention times must be within the windows established during the initial calibration. Report PVS RT and RRT data on Form QI-PHEN (see Exhibit B).

10.5.5 The RTS for the SMC in the PVS must be ± 1.0 percent between the PVS SMC RT and the SMC mean RT calculated from the initial calibration.

10.5.6 The peak resolution between o-cresol and m-cresol shall be evaluated in the PVS before proceeding with sample analyses (see paragraph 11 - System Performance).

10.6 Corrective Action

10.6.1 If recovery of a PVS compound is not within 75-125 percent but still within an expanded recovery window of 50-150 percent, flag the outlier compound "P" in all associated field sample results generated since the last valid PVS, initial calibration, or valid calibration check standard.

10.6.2 If any PVS compound is outside the expanded range, the PVS shall be reanalyzed immediately. If, on reanalysis, any compound is still outside the expanded recovery range, stop sample analyses, perform corrective action, run a new initial calibration, and reanalyze all samples run after the last valid PVS, initial calibration, or valid calibration check standard before proceeding with sample analyses.

10.6.3 If the RT or RRT for any compound is not within the RT and RRT windows established during the initial calibration, reanalyze the PVS. If upon reanalysis a compound is still outside the windows, a new initial calibration must be performed before samples can be analyzed. The instrument must be recalibrated as described in paragraph 8. Reanalyze all samples run after the last valid PVS, initial calibration, or valid calibration check standard before proceeding with sample analyses.

10.6.4 If the SMC RTS criterion is not met for a PVS, sample analyses shall be stopped and the noncompliant PVS immediately reanalyzed. If the SMC RTS is still outside the criterion upon reanalysis, corrective action shall be performed, which may include a new initial calibration. DO NOT continue with sample analyses until the RTS is within ±

1.0 percent. Reanalyze all samples that were run between the noncompliant PVS and the last valid PVS, initial calibration, or valid calibration check standard before proceeding with sample analyses.

10.6.5 If the PVS SMC recovery is less than 20 percent, greater than 200 percent, or if peak interferences are present, sample analyses shall be stopped, corrective action shall be performed, and the noncompliant PVS immediately reanalyzed. If the SMC recovery is still out on reanalysis, perform corrective action and start a new analytical sequence. All samples analyzed since the last valid PVS, initial calibration, or valid calibration check standard shall be reanalyzed within a valid analytical sequence.

10.6.6 If the peak resolution criterion is not met, the Laboratory shall perform corrective action and demonstrate adequate resolution before samples can be analyzed (see paragraph 11).

10.6.7 If all PVS criteria cannot be met after having taken corrective action, reanalyze (do not re-extract) the associated field samples in another valid analytical sequence. If on reanalyses all QC sample criteria are met and the PVS criteria still cannot be met, then submit all sample data from both sequences. The Laboratory shall describe in the Batch narrative the problems associated with the PVS and how the field sample matrix may have affected the PVS analyses. If the Laboratory can demonstrate that the problems are due to matrix effects, then both sequences are billable.

10.6.8 If a PVS reanalysis is required because of a non-compliant initial PVS analysis, the PVS reanalysis must be started within 26 hours after the start of the current analytical sequence.

10.6.9 Because reanalysis, at no additional cost to the Agency, is required if PVS technical acceptance criteria are not met, more frequent analysis of the PVS is recommended, especially when highly contaminated or complex samples are analyzed.

10.7 Documentation

Results of PVS analyses are reported on Forms QI-PHEN, QIII-PHEN, and QVI-PHEN. Reporting requirements are listed in Exhibit B.

11 System Performance - GC Resolution

11.1 Summary

Peak resolution between o-cresol and m-cresol shall be measured to establish that there is sufficient chromatographic resolution for accurate compound identifications and quantitations. When minimum peak resolution cannot be met, identification and quantitation is adversely affected due to the difficulty in establishing the baseline.

11.2 Frequency

11.2.1 Initial calibration - The peak resolution between o-cresol and m-cresol shall be evaluated in the low initial calibration standard before proceeding with sample analyses.

11.2.2 Calibration check standard - The peak resolution between o-cresol and m-cresol shall be evaluated for each calibration check standard before proceeding with sample analyses.

11.2.3 Performance verification standard - The peak resolution between o-cresol and m-cresol shall be evaluated for each PVS that is analyzed in a valid analytical sequence.

11.3 Calculations

Determine resolution by calculating the percent valley between o-cresol and m-cresol using the following equation (see figure 1).

$$\text{Percent Valley} = \frac{\text{Height of the valley between o-cresol and m-cresol}}{\text{Peak height of smaller peak being resolved}} \times 100 \qquad \text{EQ. D.10}$$

11.4 Technical Acceptance Criteria

11.4.1 Initial calibration - The percent valley must be less than or equal to 25 percent between o-cresol and m-cresol in the analysis of the low standard of the initial calibration.

11.4.2 Calibration check standard - The percent valley must be less than or equal to 25 percent between o-cresol and m-cresol in the analysis of the calibration check standard.

11.4.3 Performance verification standard - The percent valley must be less than or equal to 35 percent between o-cresol and m-cresol in the analysis of the PVS.

11.5 Corrective Action

11.5.1 If the peak resolution for the two compounds indicated in paragraph 11.1 exceeds the 25 percent valley criterion in the low level standard analyzed during the initial calibration, corrective action shall be taken, and a new initial calibration shall be performed and documented before proceeding with sample analyses.

11.5.2 If the peak resolution for the two compounds indicated in paragraph 11.1 exceeds the 25 percent valley criterion in the calibration check standard, corrective action shall be performed. A valid calibration check must be demonstrated or a new initial calibration shall be performed and documented before proceeding with sample analyses.

11.5.3 If the percent valley for the PVS does not meet the technical acceptance criteria indicated in paragraph 11.4, the PVS shall be immediately reanalyzed. If after reanalysis the PVS percent resolution is still outside criterion, corrective action shall be performed and a valid calibration check standard run or new initial calibration performed. Reanalyze all samples run after the last valid PVS, initial calibration, or valid calibration check standard before proceeding with sample analyses.

11.5.4 A high percent valley could indicate injector contamination or column degradation; therefore, injection port and/or column maintenance may be required. Maintenance may include replacement of the injector liner and/or removing 0.5 - 1 m of the column. If these measures do not work, column replacement should be considered.

11.6 Documentation

Percent resolution results are reported on Forms QIII-PHEN, QIVA-PHEN, and QV-PHEN. Reporting requirements are listed in Exhibit B.

SECTION IV

SAMPLE ANALYSIS AND COMPOUND IDENTIFICATION AND QUANTITATION

12 Summary

12.1 This method is designed for use in the rapid analysis of water, soil/solid, oil, and wipe samples for the target compounds listed in Exhibit C. If upon inspection of a sample the Contractor suspects that the sample is not amenable to this method, contact the Regional TPO or the CLASS contractor for instructions. For Superfund emergency removal actions, contact the Regional TPO or the Headquarters APO for instructions. If, for emergency response actions, the TPO or APO are not available, contact the Regional On-Scene Coordinator (OSC) for instructions. The Laboratory must remember that it shall follow the requirements in this SOW without deviation.

12.2 Before samples or required blanks can be analyzed, the instrument must meet initial calibration or valid calibration check standard and column resolution technical acceptance criteria. All sample extracts, required blanks, LCS, PVS, and calibration standards shall be analyzed under the same instrumental conditions and shall be allowed to warm to ambient temperature (approximately 1 hour) before preparation/analysis.

12.3 The laboratory shall perform sample extraction and cleanup of water samples utilizing either solvent (paragraph 14) or solid phase (paragraph 15) extraction and cleanup. The laboratory must meet all QA/QC requirements as stated under this contract using either of these extraction/cleanup techniques. The solvent extraction procedures are recommended for the cleanup and extraction of all samples; however, the phenols SPE procedure for waters may be used if equivalency to the solvent extraction procedures can be demonstrated by the Laboratory. Solvent extraction and cleanup procedures shall be used for all non-aqueous samples.

12.4 Blank samples, such as trip blanks and field blanks, supplied by the Region and included with a batch of field samples shall be prepared, analyzed, and reported as water samples. Occasionally, a water QC sample (e.g., field and trip blanks) will be included with a batch of soil samples. If the laboratory is not certain whether a water sample associated with a batch of soil samples is a QC sample, contact the Regional TPO or the CLASS contractor.

NOTE: If water blanks provided by the Region, such as trip and field blanks are included in a batch of soil samples, the laboratory is not required to prepare and analyze an associated water method blank or a water LCS.

12.5 If unusual or high concentration samples are received, see Exhibit D, Appendix B for general guidance on screening and sample preparation.

13 Phase Separation

Multi-phase samples shall be phase-separated into their individual phases. The phase separation techniques employed will vary according to the types of samples received. Since it is impossible to know the number and types of phases that will be present in a sample, the choice of phase separation techniques is left to the professional judgement of the analyst. Various techniques can be employed to separate the phases. These include pipetting off liquid phases (decanting should not be done), centrifuging to remove suspended solids, and use of spatulas to remove solids (wooden tongue depressors work well). Whenever possible, phase separation operations should be done with disposable glassware. The phases should be separated into glass containers with teflon-lined screw caps. This allows for storage and handling of the waste in a safe manner.

13.1 Samples received containing multiple phases such as water, oil, and soil/solid in the same sample jar shall be phase separated into individual phases.

13.2 Each individual phase is taken through the procedure as a subsample. Report analytical results for each sample phase. Note: Each multi-phase sample shall be identified using the EPA sample number convention for multi-phase samples as specified in Exhibit B.

13.3 Do not analyze any phase that represents less than 10 percent of the total sample volume.

13.4 In the following procedures, where applicable, references to "samples" explicitly mean "single phase units."

14 Solvent Extraction and Cleanup

14.1 Sample Preparation and Extraction - Water Samples

A 100 mL aqueous sample is serially extracted using two 10 mL portions of methylene chloride ($MeCl_2$) under basic and acidic conditions. Extractions are performed in 125 mL Erlenmeyer flasks with a magnetic stirring bar. Initial extraction of the water sample is performed with $MeCl_2$ at high pH to remove non-phenolic compounds. Methylene chloride from the initial extractions is discarded. Sodium chloride is then added to the water sample and is extracted with two portions of $MeCl_2$ at low pH to remove the target phenolic compounds. Extracts are combined, filtered, and dried through powdered anhydrous sodium sulfate, solvent switched to hexane, and concentrated to a 1 mL volume using the nitrogen blowdown procedure.

14.1.1 Measure 100 mL of sample into a 125 mL Erlenmeyer flask.

14.1.2 Spike the sample with 25 uL of the SMC (2.0 mg/mL).

14.1.3 Adjust the pH of the sample to greater than pH 11 using 0.5 N Sodium hydroxide solution.

14.1.4 Add teflon stirring bar.

14.1.5 Add 10 mL of $MeCl_2$.

14.1.6 Place the sample on a magnetic stirring plate and stir for three minutes. The stirring rate should be sufficient to mix the $MeCl_2$ throughout the sample.

14.1.7 Remove the stir bar and allow the aqueous and $MeCl_2$ layers to separate.

14.1.8 Remove the $MeCl_2$ layer with a Pasteur pipet and discard the solvent.

14.1.9 Repeat steps 14.1.4 - 14.1.8.

14.1.10 Cool the sample to 4°C in an ice bath. Carefully adjust the pH of the sample to pH 2.0 - 3.0 using 0.5 N hydrochloric acid solution. Be sure the sample does not heat up during this acidification.

14.1.11 Add teflon stirring bar.

14.1.12 Carefully add 25 g of NaCl to the sample and stir for 3 minutes.

14.1.13 Repeat steps 14.1.5 - 14.1.7.

14.1.14 Remove the $MeCl_2$ with a Pasteur pipet and transfer to a 25 mL concentrator tube.

14.1.15 Repeat steps 14.1.5 - 14.1.7 and 14.1.14 , combining the $MeCl_2$ layers. Discard extracted aqueous sample.

14.1.16 Prepare a drying column by plugging the bottom of a funnel with glass wool and adding approximately 15 grams of powdered anhydrous sodium sulfate. Pour extract through funnel and collect in a 25 mL graduated concentrator tube. Rinse the extract container with minimal volumes of $MeCl_2$ and pour through the funnel. Rinse sodium sulfate twice with minimal volumes of $MeCl_2$.

14.1.17 Concentrate the extract to approximately 0.5 mL using the nitrogen blowdown procedure in a 30°C water bath (to minimize analyte loss due to volatility, occasionally rinse sides of concentrator tube with $MeCl_2$ during the blowdown procedure). Add 5 mL of hexane to concentrator tube and mix vigorously. Reconcentrate to 1 mL. Do not let extract go dry during concentration. This final volume is suitable for extract compound concentrations of 5.0 µg/mL to 250 µg/mL. This is equivalent to sample compound concentrations of 50 to 2500 µg/L for water samples.

14.1.18 Transfer the extract to an autosampler or other 1-mL vial and analyze the extract according to paragraph 18.

14.2 Sample Preparation and Extraction - Soil/Solid Samples

A 6 gram sample of soil/solid is mixed with powdered anhydrous sodium sulfate and is serially extracted with two portions of methylene chloride ($MeCl_2$) using an ultrasonic probe. The extract layers are collected and the phenolic compounds are back-extracted into clean reagent water at high pH. Non-phenolic extractables in the $MeCl_2$ are discarded. Sodium chloride is then added to the aqueous phase and is extracted with two portions of $MeCl_2$ at low pH to remove the phenolic compounds. Extracts are combined, filtered, and dried through powdered anhydrous sodium sulfate, and concentrated to a 1 mL volume using the nitrogen blowdown procedure.

14.2.1 Mix samples thoroughly, especially composited samples. Discard any foreign objects, such as sticks, leaves, and rocks.

14.2.2 Weigh approximately 6 grams of a representative sample to the nearest 0.1 g into a 150 mL beaker.

14.2.3 To the weighed sample, add a sufficient amount of powdered anhydrous sodium sulfate to prepare a free flowing mass upon mixing. Mix well.

14.2.4 Spike the sample with 25 uL of the SMC (2.0 mg/mL).

14.2.5 Add 10 mL of $MeCl_2$/acetone (50:50).

14.2.6 Sonicate at microtip maximum power; cool the sample during sonication. The sonicator must be set for 50 percent pulse action. Sonicate for 3 minutes. The power output may have to be adjusted to ensure that the sample extract does not splash excessively; any significant loss of sample during sonication is not acceptable. Rinse the sonicator tip after each sample extraction with 1 mL of $MeCl_2$/acetone (50:50).

14.2.7 Remove and collect the $MeCl_2$/acetone layer in a 50 mL Erlenmeyer flask.

14.2.8 Repeat steps 14.2.5 - 14.2.7.

14.2.9 Add 10 mL of reagent water at pH greater than 11 to the sample extract.

14.2.10 Add teflon stirring bar.

14.2.11 Place the sample on a magnetic stirring plate and stir for three minutes. The stirring rate should be sufficient to mix the solvent layer and the reagent water.

14.2.12 Remove the stir bar and allow aqueous and solvent layers to separate.

14.2.13 Remove the aqueous layer by Pasteur pipet and transfer to a 50 mL Erlenmeyer flask.

14.2.14 Repeat steps 14.2.9 - 14.2.13, combining the aqueous layers. Discard the extracted solvent layer.

14.2.15 Cool the aqueous phase to 4°C in an ice bath. Carefully adjust the pH of the sample to pH 2.0 - 3.0 using 0.5 N hydrochloric acid solution. Be sure the sample does not heat up or splash during this acidification.

14.2.16 Carefully add 5 g of NaCl to the sample and stir for 3 minutes.

14.2.17 Add 10 mL of $MeCl_2$.

14.2.18 Repeat steps 14.2.10 - 14.2.12.

14.2.19 Remove the $MeCl_2$ by Pasteur pipet and transfer to a 25 mL concentrator tube.

14.2.20 Repeat steps 14.2.17 - 14.2.19, combining the $MeCl_2$ layers. Discard the aqueous phase.

14.2.21 Filter the combined extracts by gravity or vacuum filtration. Complete filtration by transferring entire sample contents to funnel and rinse with an additional 10 mL $MeCl_2$.

14.2.21.1 For gravity filtration, prepare a filtration/drying bed with Whatman #42 filter paper filled with approximately 15 grams of powdered anhydrous sodium sulfate in a 6 cm

powder funnel. Rinse the sodium sulfate and filter paper with $MeCl_2$ and discard rinsate. With the filter and sodium sulfate wetted, decant combined extracts through the packed funnel and collect in a 50 mL centrifuge tube. Rinse the extract container with minimal volumes of $MeCl_2$ and pour through the funnel. Rinse filter/sodium sulfate with 10 mL of $MeCl_2$.

14.2.21.2 For vacuum filtration use Whatman #42 filter paper in a Buchner funnel. Pre-wet the paper with $MeCl_2$ and discard rinsate. Transfer combined extracts into funnel, apply vacuum, and collect filtrate. Rinse filter with 10 mL of $MeCl_2$. Pour filtered extract through a powder funnel plugged with glass wool and filled with anhydrous sodium sulfate and collect in a 60 mL centrifuge tube. Rinse the extract container with minimal volumes of $MeCl_2$ and pour through the funnel. Rinse sodium sulfate with an additional 10 mL $MeCl_2$.

14.2.22 Concentrate extract to approximately 25 mL using the nitrogen blowdown procedure in a 30°C water bath. Transfer extract concentrate to a 25 mL concentrator tube and concentrate further to approximately 0.5 mL (to minimize analyte loss due to volatility, occasionally rinse sides of centrifuge and concentrator tubes with $MeCl_2$ during the blowdown procedure). Add 5 mL of hexane to the concentrator tube and mix vigorously. Reconcentrate to 1 mL. Do not allow extract to go dry during concentration. This final volume is suitable for extract compound concentrations of 5.0 µg/mL to 250 µg/mL. This is equivalent to sample compound concentrations of 830 to 41,000 µg/kg for soil/solid samples.

14.2.23 Transfer the extract to an autosampler or other 1-mL vial and analyze the extract according to paragraph 18.

15 <u>Solid Phase Extraction and Cleanup of Water Samples</u>

Solid Phase Extraction using styrene divinyl benzene (SDB) disks may be used to extract water samples (Note: an alternative phase may be used if the new phase can be demonstrated to meet the QA/QC requirements of this method.) An additional filter disk is required when water samples contain particulates. Upon opening a package of disks, they shall be used immediately or stored in a desiccator (over Drierite, or equivalent). **For reproducible extraction efficiencies, all directions given below shall be followed as closely as possible.** NOTE: The Laboratory shall not use SPE for non-aqueous samples.

Because many disk extraction vacuum hardware components are avaliable commercially, the Laboratory should follow the manufacturers directions for the proper use of these devices. The Laboratory should also refer to the extraction disk package inserts for additional details on the proper use of the disks and disk vacuum apparatus.

15.1 Sample Filtration

All water samples extracted using SPE disks shall be filtered. The filtration step may be combined with the extraction by placing a filter disk designed to fit inside the neck of the sample reservoir and proceeding with the water sample cleanup and extraction as specified in paragraphs 15.2 - 15.5.

15.2 Disk Extraction Set-up and Conditioning

15.2.1 Place a 47 mm Styrene Divinyl Benzene (SDB) Empore™ disk onto the base unit of a glass filtration assembly (without the reservoir and clamp). Use of a manifold for extractions is acceptable.

NOTE: When performing the pre-wash, wash, and conditioning steps as described below, the Laboratory may want to consider collecting solvent wastes separately from the sample wastes in order to minimize the creation of large volumes of hazardous wastes mixed with water samples.

15.2.2 NOTE: When pre-cleaned SDB disks are used, the following pre-wash procedure is not necessary. Pre-swelling with acetone, however, will prevent cosmetic "wrinkling" of the disk which will not affect performance.

To swell the resin and pre-wash the SDB disk, pipette 2-4 mL of acetone onto the disk surface. Allow to soak for approximately 3 minutes. Draw the acetone through and allow the disk to dry. Repeat using 2-4 mL of isopropyl alcohol.

15.2.3 Place the glass reservoir on the base unit and clamp in place. Gently pinch the clamp to assure even pressure around the disk.

15.2.4 Wash the extraction apparatus and disk by adding 5 mL of methylene chloride to the reservoir, rinsing down the sides of the reservoir in the process. Draw a small amount through the disk with a vacuum; turn off the vacuum and allow the disk to soak for approximately 1 minute. Draw the remaining solvent through the disk and allow the disk to dry.

15.2.5 Condition the disk by adding approximately 5 mL of methanol to the reservoir, drawing a small amount through the disk then letting it soak for approximately 1 minute. Draw most of the remaining methanol through the disk, leaving 3-5 mm of the methanol on the surface of the disk.

NOTE: THE DISK SHOULD NOT BE ALLOWED TO GO DRY FROM THIS POINT UNTIL THE END OF SAMPLE EXTRACTION. RESIDUAL VACUUM IN THE EXTRACTION DEVICE MUST BE VENTED TO PREVENT THE DISK FROM DRYING OUT. MOST VACUUM MANIFOLD DEVICES AUTOMATICALLY VENT WHEN THE VACUUM IS TURNED OFF. THE VACUUM LINE MAY NEED TO BE DISCONNECTED IN ORDER TO VENT THE RESIDUAL VACUUM IF SUCTION FLASKS ARE USED.

15.2.6 Add 10 mL of reagent water to the disk. Using the vacuum, pull most of the water through, again leaving 3-5 mm of water on the surface of the disk.

NOTE: AS DESCRIBED IN THE PREVIOUS STEP, RESIDUAL VACUUM IN THE EXTRACTION DEVICE MUST BE VENTED TO PREVENT THE DISK FROM DRYING OUT.

15.3 Compound Extraction and Elution Using Disks

NOTE: The phenols water CRQLs are the same as the solvent extracted sample CRQLs as stated in Exhibit C.

15.3.1 Pour 100 mL of water sample into a clean Erlenmeyer flask, Fleaker beaker, separatory funnel, or any other suitable mixing chamber.

15.3.2 Adjust the pH of the water sample to ≤ 2 using 0.5 N Hydrochloric acid. Add 0.5 mL of methanol and 5 g NaCl to 100 mL of the water sample.

15.3.3 Spike the sample with 25 µL of the SMC (2.0 mg/mL).

15.3.4 Add the water sample to the reservoir and filter as quickly as the vacuum will allow. Drain as much water from the sample bottle as possible.

15.3.5 Remove filter assembly and insert suitable sample tube for eluate collection.

15.3.6 Add 5 mL of methylene chloride to sample bottle. Rinse bottle thoroughly and set aside momentarily.

15.3.7 Wet the disk with a small amount of acetone - just enough to wet the surface (approximately 0.5 mL) and immediately transfer the methylene chloride from the sample bottle to

the disk with a disposable pipette, rinsing sides of the filtration reservoir in the process.

15.3.8 Draw half of the solvent through the disk then release the vacuum. Allow the remaining methylene chloride to soak the disk for approximately 1 minute then draw remainder through under vacuum.

15.3.9 Repeat the solvent rinse of the sample bottle using 5 mL of methylene chloride and transfer to the apparatus, rinsing down the sides of the reservoir. Add 5 mL of methylene chloride directly on the disk and draw through under vacuum.

15.3.10 Add 8 g of anhydrous sodium sulfate to dry the eluate. Pipet the eluate into a concentrator tube. Rinse the collection tube and sodium sulfate with two 5 mL portions of methylene chloride and combine the rinsates with the sample eluate in the concentrator tube. NOTE: If large clumps form on addition of the sodium sulfate to the sample eluate, break up the clumps before adding the rinses.

15.3.11 Concentrate extract to 1 mL under gentle stream of nitrogen (may be warmed gently - approximately 30 degrees C.) To minimize analyte loss due to volatility, occasionally rinse sides of centrifuge and concentrator tubes with methylene chloride during the blowdown procedure. This final volume is suitable for extract compound concentrations of 5.0 µg/mL to 250 µg/mL. This is equivalent to sample compound concentrations of 50 to 2500 µg/L for water samples.

15.3.12 Transfer the extract to an autosampler or other 1-mL vial and analyze the extract according to section 18.

16 Sample Preparation and Extraction - Oil Samples

NOTE: The phenols target compound CRQL for oil samples is 830 µg/kg (see Exhibit C). (Oily mixtures should first be phase-separated according to the procedures in paragraph 13.)

16.1 Weigh approximately 6 grams of oil to the nearest 0.1 g into a culture tube.

16.2 Spike the sample with 1 mL of SMC (50 µg/mL).

16.3 Add 10 mL of hexane and shake vigorously.

16.4 Transfer mixture into a 125 mL separatory funnel.

16.5 Add 10 mL of reagent water at pH greater than 11 to the sample extract. Shake 3 minutes.

16.6 Allow aqueous and solvent layers to separate and discard solvent (hexane) layer.

16.7 Add 10 mL of hexane. Shake 3 minutes and discard the hexane layer.

16.8 Cool the aqueous phase to 4°C in an ice bath. Carefully adjust the pH of the sample to pH 2.0 - 3.0 using 0.5 N hydrochloric acid solution. Be sure the sample does not heat up or splash during this acidification.

16.9 Carefully add 5 g of NaCl to the sample and shake until dissolved.

16.10 Add 10 mL of $MeCl_2$ and shake for 3 minutes.

16.11 Allow layers to separate and collect the solvent layer in a 25 mL concentrator tube.

16.12 Repeat steps 16.10 - 16.11, combining the $MeCl_2$ layers. Discard the aqueous phase.

16.13 Concentrate extract to approximately 0.5 mL using the nitrogen blowdown procedure in a 30°C water bath (to minimize analyte loss due to volatility, occasionally rinse sides of the concentrator tube with $MeCl_2$ during the blowdown procedure). Add 5 mL of hexane to the concentrator tube and mix vigorously. Reconcentrate to 1 mL. Do not allow extract to go dry during concentration. This final volume is suitable for extract compound concentrations of 5.0 µg/mL to 250 µg/mL. This is equivalent to sample compound concentrations of 830 to 41,000 µg/kg for oil samples.

16.14 Transfer the extract to an autosampler or other 1-mL vial and analyze the extract according to paragraph 18.

17 <u>Sample Preparation and Extraction - Wipe Samples</u>

A wipe sample containing phenols is serially extracted with two portions of methylene chloride ($MeCl_2$) using an ultrasonic probe. The extract layers are collected and the phenolic compounds are "back-extracted" into clean reagent water at high pH. Non-phenolic extractables in the $MeCl_2$ are discarded. Sodium chloride is then added to the aqueous phase and is extracted with two portions of $MeCl_2$ at low pH to remove the phenolic compounds. Extracts are combined, filtered, and dried through powdered anhydrous sodium sulfate, and concentrated to a 1 mL volume using the nitrogen blowdown procedure.

NOTE: The target compound CRQLs for wipe samples will be specified by the Agency.

17.1 Pour off any free solvent from the sample jar into a clean Erlenmeyer flask of appropriate size.

17.2 Spike the sample with 25 uL of the SMC (2.0 mg/mL).

17.3 Add enough clean $MeCl_2$ to the sample jar to just cover the wipe sample.

17.3.1 If the shape of the sample jar is not amenable to sonication, quantitatively transfer the sample to an appropriate container. Rinse the sample jar with 5-10 mL of hexane and transfer to the new sample container.

17.4 Sonicate at microtip maximum power; cool the sample during sonication. The sonicator must be set for 50 percent pulse action. Sonicate for 3 minutes. The power output may have to be adjusted to ensure that the sample extract does not splash excessively; any significant loss of sample during sonication is not acceptable. Rinse the sonicator tip after each sample extraction with 1 mL of $MeCl_2$.

17.5 Remove the $MeCl_2$ layer from the sonication and combine it with the solvent in the Erlenmeyer flask.

17.6 Repeat steps 17.3 - 17.5.

17.7 Add teflon stirring bar to the Erlenmeyer flask.

17.8 Add 10 mL of reagent water at pH greater than 11 to the sample extract.

17.9 Place the sample on a magnetic stirring plate and stir for three minutes. The stirring rate should be sufficient to mix the organic solvent and the reagent water.

17.10 Allow aqueous and organic solvent layers to separate.

17.11 Remove the aqueous layer by pasteur pipet and transfer to a clean 50 mL Erlenmeyer flask.

17.12 Repeat steps 17.8 - 17.11, combining the aqueous layers. Discard the extracted organic solvent layer.

17.13 Cool the aqueous phase for 5 minutes in an ice bath. Carefully adjust the pH of the sample to pH 2.0 - 3.0 using 0.5 N hydrochloric acid solution. Be sure the sample does not heat up or splash during this acidification.

17.14 Add teflon stirring bar.

17.15 Carefully add 5 g of NaCl to the aqueous phase and stir for 3 minutes.

17.16 Add 10 mL of $MeCl_2$.

17.17 Repeat steps 17.9 - 17.10.

17.18 Remove the $MeCl_2$ by Pasteur pipet and transfer to a clean 25 mL concentrator tube.

17.19 Add 5 mL $MeCl_2$ to the aqueous sample. Repeat steps 17.17 - 17.18, combining the $MeCl_2$ layers in the 25 mL concentrator tube. Discard the aqueous phase.

17.20 Filter the combined extracts by gravity filtration.

17.20.1 Prepare a filtration/drying bed with Whatman #42 filter paper filled with approximately 15 grams of powdered anhydrous sodium sulfate in a 6 cm powder funnel. Rinse the sodium sulfate and filter paper with $MeCl_2$ and discard rinsate. With the filter and sodium sulfate wetted, decant combined extracts through the packed funnel and collect in a clean 25 mL concentrator tube. Rinse the concentrator tube with an additional 5 mL $MeCl_2$, and transfer the rinse solvent to powder funnel. Rinse powder funnel with 10 mL $MeCl_2$.

17.21 Concentrate the extract to approximately 0.5 mL using the nitrogen blowdown procedure in a 30°C water bath (to minimize analyte loss due to volatility, occasionally rinse sides of concentrator tube with $MeCl_2$ during the blowdown procedure). Do not allow extract to go dry during concentration. Add 5 mL of hexane to the 25 mL concentrator tube and mix vigorously. Reconcentrate to 1 mL.

17.22 Analyze the extract according to paragraph 18.

18 <u>Instrumental Analysis</u>

18.1 Set up the GC system per the requirements in paragraph 7.

18.1.1 Solvent-flush manual injection or automated sample injection is recommended for analysis.

18.1.2 An analytical sequence consists of field sample analyses and all associated standards, blanks, and QC analyses performed within a 24-hour period on one instrument. There are two (2) types of analytical sequences: an initial calibration analytical sequence and a daily calibration check analytical sequence. All samples shall be analyzed within one of these analytical sequences.

18.1.2.1 An initial calibration analytical sequence begins with a three-point calibration, an instrument blank, an LCS, and a method blank. The initial calibration analytical sequence is as follows:

- Initial three-point Calibration (analysis of the high standard proceeded by the mid and low standards);
- Instrument Blank;
- Laboratory Control Sample(s);
- Method Blank(s);
- Field Sample(s);
- Instrument Blank(s); and
- Performance Verification Standard(s).

18.1.2.2 A daily calibration check analytical sequence begins with an instrument blank, a valid calibration check standard, a method blank, and an LCS. The daily calibration analytical sequence is as follows:

- Instrument Blank;
- Calibration Check Standard;
- Method Blank(s);
- Laboratory Control Sample(s);
- Field Sample(s);
- Instrument Blank(s); and
- Performance Verification Standard(s).

18.1.3 If all acceptance criteria for these analyses are met, then the laboratory may proceed with sample analyses.

18.1.4 All analytical sequences conclude with an acceptable instrument blank and a PVS analysis. The PVS shall be started within 24 hours after the injection of the first initial calibration standard or the first instrument blank in the daily calibration sequence.

NOTE: If a PVS reanalysis is required because of a non-compliant initial PVS analysis, the PVS reanalysis must be started within 26 hours after the start of the current analytical sequence.

18.1.5 The method blank and all associated samples shall be analyzed in the same analytical sequence. If samples from a batch are analyzed in more than one analytical sequence, the associated method blank must also be analyzed in the same analytical sequence. If a method blank extract is used up because of multiple analyses, the Laboratory shall substitute an instrument blank in place of a method blank in all subsequent analytical sequences. The Laboratory shall note this in the Batch Narrative and shall use the EPA identification number as described in Exhibit B for this instrument blank.

18.1.6 The LCS shall be analyzed with all associated samples in the same analytical sequence. If samples from a batch are analyzed in more than one analytical sequence, the associated LCS shall be analyzed in the same analytical sequence. If an LCS extract is used up because of multiple analyses, the Laboratory shall dilute the LCS standard mixture (the original stock mix) and use this solution in place of the original LCS sample in all subsequent analytical sequences (see paragraph 27). The Laboratory shall note this in the Batch Narrative and shall use the EPA identification number as described in Exhibit B for this LCS solution.

18.2 Computer reproductions of chromatograms that are attenuated to ensure that all peaks are on scale over a 100-fold range are acceptable. However, post analysis attenuation shall be no greater than a 100-fold range. This is to reduce the potential for RTS of compounds due to column overload and to ensure that the detector is operating within the calibration range. If any sample compounds exceed the calibration range, they shall be diluted according to paragraph 19.

18.3 If any saturated non-target compound chromatographic peaks are evident or if any chromatographic peaks overlap more than one RRT and/or RT target compound windows, the Laboratory shall use the "E,N" flags on Form QI-PHE to indicate this situation.

18.3.1 If saturated chromatographic peaks outside target compound RRT and/or RT windows are evident, flag the nearest target compound "E,N" on Form QI-PHE.

18.3.2 If chromatographic peaks overlapping more than one target compound RRT and/or RT windows are evident, flag the corresponding target compounds "E,N" on Form QI-PHE

18.4 Chromatographic peak response must be greater than 10 percent and less than 100 percent of full-scale deflection to ensure that individual compounds will be visible during data review.

19 Dilutions

19.1 Samples with compounds exceeding the calibration range of the GC must be reported with the "E" data flag as described in Exhibit B. Upon evaluation, the Region may require that the samples be diluted, reextracted, and/or reanalyzed in a valid analytical sequence as additional paid samples. Reextraction and/or reanalysis of samples can only be authorized by the CLASS contractor acting on behalf of the Regional TPO or Headquarters APO. The Laboratory shall perform the dilution analysis as specified below in paragraph 19.2.

19.2 The Laboratory may dilute samples prior to initiating sample extraction/analysis. The resulting analysis of those samples must produce chromatograms with at least one target compound present at a concentration greater than or equal to the mid point calibration mixture. If no compound is identified in the diluted sample at a concentration that exceeds the mid level standard, then the undiluted sample shall be reextracted and/or reanalyzed at no additional cost to the Agency.

19.2.1 At the request of the Region, sample dilution may be required prior to the initial extraction and analysis. If no target compounds are detected in the diluted sample at a concentration that exceeds the mid level standard, then the undiluted sample shall be reextracted and/or reanalyzed as an additional paid sample.

19.2.2 Dilutions - Solvent extracted, oil, and wipe samples

19.2.2.1 Dilutions of solvent extracted, oil, and wipe samples shall be made by using an appropriate aliquot of the extract diluted in hexane. After making a dilution, add sufficient SMC solution to bring up to proper concentration (50 µg/mL).

19.2.3 Dilutions - SPE extracted samples

19.2.3.1 Dilutions of water samples shall be made by using an appropriate aliquot of sample diluted to 100 mL with methanol/water (0.5:100) at a pH of ≤ 2 with 5 g of NaCl (see paragraph 15.3.2). Continue with sample extraction and cleanup as described in paragraph 15.

NOTE: Dilute samples prior to the addition of the SMC.

19.2.4 Sample dilutions shall be analyzed in a valid analytical sequence which includes the associated method blank and LCS.

19.2.5 If sample reextractions and reanalyses are required, the Laboratory shall also reextract and reanalyze an associated method blank and LCS.

20 Identification of Target Compounds

20.1 Retention Time Standard - The SMC shall be used as the RT marker for compound identification. The SMC shall also be used to monitor extraction efficiency.

20.1.1 The SMC shall be added to all field and QC samples prior to extraction.

20.1.2 In each analysis, the SMC RT must be within ± 1.0 percent of the mean RT of the SMC established during the initial calibration.

20.2 Compound identification when SMC recovery is greater than or equal to 10 percent and less than or equal to 200 percent.

20.2.1 Target compounds shall be identified on the basis of RRT in all field samples for which the SMC recovery is greater than or equal to 10 percent and less than or equal to 200 percent.

20.2.2 Peaks in sample chromatograms shall be identified as target compounds if their RRT is within ± 0.008 RRT units of the mean RRT established during initial calibration.

20.3 Compound identification when SMC recovery is less than 10 percent, greater than 200 percent, or if peak interferences are present.

20.3.1 Target compounds shall be identified on the basis of absolute RT in all field samples for which the SMC recovery is less than 10 percent, greater than 200 percent, or if peak interferences are present.

20.3.2 Peaks in sample chromatograms shall be identified as target compounds if their absolute RT is within ± 1.0 percent of the mean RT established during the initial calibration.

20.3.3 Any compound identified on the basis of absolute RT shall be flagged with the qualifier "T" (See Exhibit B).

20.3.4 If the recovery of the SMC in a field sample is less than 10 percent, greater than 200 percent, or if peak interferences are present, acceptable recovery of the SMC must be obtained in the associated method blank and LCS (see paragraphs 25 and 27).

20.4 If multiple peaks are within the identification windows (target compound and SMC), the Laboratory shall use professional judgement to properly identify the appropriate peak. The Laboratory should consider the inherent matrix effects of the sample on peak shifting, masking, and overlaps when making identification determinations. The Laboratory should take into consideration the mean RT and RRT from the initial calibration, RT and RRT from the calibration check standard, and the SMC RT from relatively clean samples analyzed before and after the sample in question as a basis for selecting the most appropriate peak. The Laboratory shall describe in the Batch Narrative the rationale used for choosing a particular peak (e.g., chose peak closest to the RT of the peak in calibration check standard) as the target compound or SMC and how the field sample matrix may have affected peak identification.

21 Calculations

21.1 Calculate the RRT of a sample component or a standard using the following equation:

$$RRT = \frac{RT_{component}}{RT_{SMC}} \qquad \text{EQ. D.11}$$

Where:

RRT = relative retention time

$RT_{component}$ = retention time of the target compound

RT_{SMC} = retention time of the SMC

21.2 Calculate the calibration factor for a compound by one of three techniques using data collected during an acceptable initial calibration (paragraph 8). Only one of the quantitation techniques listed below shall be used for quantitating samples within a Batch and analyzed within a given analytical sequence. The use of the line segment or "K" curve is suggested.

21.2.1 Use the "K" curve (line segments) established during initial calibration. The segments run from the low to the mid point and from the mid to the high point calibration mixtures. Many data systems calculate "K" curves automatically. (Note: do not extend line segment through the origin if the concentration is below the CRQL).

21.2.2 Use the calibration factors based on the mid point of the initial calibration curve. This option may be used as long as the mid point values are within ± 10 percent of the average of the high and low point values.

21.2.3 Use the mean calibration factor established during the initial calibration.

21.2.4 Quantitation of compounds is based on the calibration factors established during initial calibration.

21.2.5 All calibration requirements, including the initial calibration %RSD and the calibration check %D criteria, must be met regardless of the quantitation technique used.

21.3 Quantitation of Target Compounds

Calculate the concentration in the sample using one of the following equations for external standards. The response can be measured by automated peak height or integrated peak area measurements.

21.3.1 Water

$$Concentration\ (\mu g/L) = \frac{(A_x)\,(V_t)}{(CF_m)\,(V_i)\,(V_s)} \qquad \text{EQ. D.12}$$

where:

A_x = response for the analyte to be measured.

CF_m = calibration factor established by one of three techniques during the initial calibration. (NOTE: Only one method of quantitation may be used for samples within a Batch and analyzed within a given analytical sequence).

V_t = volume of concentrated extract (use 1000 µL or a factor of this when dilutions are made).

V_i = volume of extract injected (µL).

V_s = volume of water extracted (mL).

21.3.2 Soil/Solid (Wet-weight basis) and Oil

$$Concentration\ (\mu g/kg) = \frac{(A_x)\,(V_t)}{(CF_m)\,(V_i)\,(W_s)} \qquad \text{EQ. D.13}$$

where:

A_x, CF_m, V_i = same as given in Equation D.12

V_t = volume of concentrated extract (use 1000 µL or a factor of this when dilutions are made).

W_s = weight of sample extracted in g.

21.4 Calculate the SMC amount observed and amount (percent) recovered using equations as described in paragraph 10.4.

21.5 RTS shall be monitored using the SMC (paragraph 20.1). The RTS shall be measured for all analyses.

21.5.1 Calculate the retention time percent difference (RT %D) between the RT of the SMC in the field and QC samples or subsequent standards analyzed and the mean SMC RT from most recent initial calibration analyzed using using the following equation.

$$RT\ \%D = \frac{RT_c - RT_s}{RT_c} \times 100 \qquad \text{EQ. D.14}$$

where:

RT %D = retention time percent difference.

RT_s = retention time of the SMC in a field and QC sample or subsequent standard.

RT_c = mean retention time of the SMC from the most recent initial calibration.

22 Technical Acceptance Criteria

22.1 Each sample within a Batch shall be analyzed on a GC system meeting the initial calibration or valid calibration check standard technical acceptance criteria (paragraphs 8 and 9).

22.2 Each sample within a Batch shall be analyzed after an acceptable method and instrument blank (paragraphs 25 and 26), and after an acceptable LCS (paragraph 27) are analyzed.

22.3 Each sample within a Batch shall be run within a valid initial calibration or daily calibration check analytical sequence that concludes with an acceptable instrument blank (paragraph 26) and an acceptable PVS (paragraph 10).

22.4 Each sample within a Batch shall be analyzed and results reported within the contract required turnaround times.

22.5 Each sample matrix within a Batch shall have an acceptable method blank analyzed during the same analytical sequence.

22.6 The RTS for the SMC must be within ± 1.0 percent between any sample in a Batch and the mean RT of the SMCs analyzed during the initial

calibration. The RTS is not evaluated if the SMC is not recovered or if peak interferences are present.

22.7 The advisory recovery limit for the SMC is 50-150 percent. Reanalyses of field samples are not made if the SMC recovery is outside the advisory recovery limits.

22.8 The SMC recovery must be greater than or equal to 10 percent and less than or equal to 200 percent in order to use RRT for identification purposes. The identification window is ± 0.008 unit of the mean RRT of each target compound from the initial calibration. If the recovery of the SMC is less than 10 percent, greater than 200 percent, or if peak interferences are present (but is adequately recovered in the method blank), the absolute RT of the compounds shall be used for identification purposes. The identification window is ± 1.0 percent of the mean absolute RT of each target compound from the initial calibration.

23 Corrective Action

23.1 Flag all sample results "S" if the SMC is outside the advisory recovery limits of 50-150 percent.

23.2 Flag all sample results "T" if the absolute RTs are used for identifications.

23.3 An SMC recovery of less than 20 percent in the method blank or LCS associated with a sample batch is an indication that serious problems may have occurred during the extraction process. Corrective action shall be performed and the unacceptable method blank and/or LCS and all samples associated with the unacceptable method blank and/or LCS shall be reextracted and reanalyzed at no additional expense to the Agency.

23.4 If the SMC retention time shift (RTS) criterion is not met for any field sample, sample analysis shall be stopped and the noncompliant sample rerun. If the RTS criterion is still out upon reanalysis analyze an instrument blank. If the instrument blank SMC RTS is outside the criterion, perform corrective action, which may include a new initial calibration. DO NOT continue with sample analyses until the RTS is within ± 1.0 percent. If the instrument blank SMC RTS meets the criterion, sample analyses may continue. The Laboratory shall report both sets of noncompliant sample data and flag the results "M". Note: The RTS is not evaluated if the SMC is not recovered or if peak interferences are present.

23.5 All target compound concentrations which exceed the upper limit of the initial calibration range will be flagged "E" (see Exhibit B).

NOTE: Unless otherwise stated in Exhibit D, all sample data from the initial analysis shall be reported to the appropriate Region. Samples

not meeting any one of the contract technical acceptance criteria and not requiring automatic reextraction and/or reanalysis shall be flagged by the Laboratory. The Region will evaluate the noncompliant samples and may specify that these be reanalyzed as additional paid samples.

24 Documentation

Sample results shall be reported on Forms QI-PHEN and QVI-PHEN. Reporting requirements are listed in Exhibit B.

SECTION V

SAMPLE QUALITY CONTROL PROCEDURES AND REQUIREMENTS

25 Method Blank Analysis

25.1 Summary - A method blank for water samples is 100 mL of reagent water spiked with the SMC and carried through the entire analytical scheme. A method blank for soil/solid samples is 6 g of clean quartz sand spiked with the SMC and carried through the entire analytical scheme. A method blank for oil samples is 6 g of clean corn oil spiked with the SMC and carried through the entire analytical scheme. Method blanks shall be carried through the entire analytical procedure.

NOTE: The Agency will provide the Laboratory with further instructions for the analysis of method blanks for wipe samples.

25.2 Frequency

A method blank analysis shall be performed for each matrix type (water, soil/solid, or oil) and with each set of samples. A set of samples is defined as those samples from one Batch that are extracted and analyzed on one instrument during a 24-hour analytical sequence.

25.2.1 The method blank and all associated samples shall be analyzed in the same analytical sequence. If samples from a batch are analyzed in more than one analytical sequence, the associated method blank must also be analyzed in the same analytical sequence. If a method blank extract is used up because of multiple analyses, the Laboratory shall substitute an instrument blank in place of a method blank in all subsequent analytical sequences. The Laboratory shall note this in the Batch Narrative and shall use the EPA identification number as described in Exhibit B for this instrument blank.

25.2.2 An acceptable method blank shall be analyzed before running any samples within an analytical sequence.

25.2.3 When analyzing highly contaminated samples using SPE disks on more than one manifold, the Laboratory should analyze one method blank per extraction manifold. If an unacceptable method blank is analyzed and the contamination can be isolated to a particular manifold, only samples extracted on that manifold will have to be reextracted. If an unacceptable method blank is analyzed, and only one method blank is used, all samples from all manifolds shall be reextracted.

25.2.4 If all field samples in a Batch are filtered, the associated method blank shall also be filtered. If only a partial set of samples in a Batch are filtered, then a separate method blank shall be run through the filter, extracted, and analyzed.

25.2.5 Criteria for an acceptable method blank is defined in paragraph 25.4.

25.3 Procedure for Method Blank Preparation

25.3.1 Prepare the method blanks at the frequency listed in paragraph 25.2.

25.3.2 Measure out 100 mL of reagent water for each water method blank sample aliquot.

25.3.3 Soil/solid method blanks are 6 g of clean quartz sand.

25.3.4 Prepare water and soil/solid method blanks as described in paragraph 14 or 15 depending on whether solvent or solid phase extraction is utilized.

25.3.5 Oil method blanks are 6 g of corn oil spiked with 1 mL of the SMC (50 µg/mL) and extracted with hexane. Follow the sample preparation and extraction procedures as described in paragraph 16.

25.3.6 Analyze the method blank extracts. Calculate the results according to paragraph 21.

25.4 Technical Acceptance Criteria

25.4.1 All method blanks shall be analyzed within an acceptable analytical sequence on a GC system meeting the initial three-point calibration criteria (paragraph 8) or valid calibration check standard criteria (paragraph 9), and the PVS acceptance criteria (paragraph 10).

25.4.2 The RTS for the SMC in the method blank must be within ± 1.0 percent between the blank SMC RT and the mean SMC RT calculated from the initial calibration.

25.4.3 The SMC recovery criterion of 50-150 percent is advisory only. The SMC recovery in the method blank must, however, be greater than or equal to 20 percent and less than or equal to 200 percent.

25.4.4 The target compounds or potential interferences in the method blanks must have a response less than one-half the

response in the corresponding RRT window of the initial calibration low concentration standard.

25.4.5 A method blank may contain a detectable but acceptable concentration of a target compound (less than one-half the response of the initial calibration low concentration standard).

25.4.6 If all criteria are satisfied, the method blank analysis is acceptable and samples may be analyzed. If the method blank is unacceptable, corrective action shall be taken and an acceptable method blank must be analyzed prior to analyzing the associated samples.

25.5 Corrective Action

25.5.1 If a method blank does not meet the technical acceptance criteria, the Contractor shall consider the analytical system to be out of control. It is the Contractor's responsibility to eliminate method interferences caused by contaminants in solvents, reagents, disks, glassware, and other sample storage and processing hardware that lead to discrete artifacts and/or elevated baselines in gas chromatograms. If contamination is a problem, the Contractor shall investigate the source of the contamination, and appropriate corrective measures shall be taken and documented before further sample analysis proceeds.

25.5.2 If a compound is found in the method blank (less than one-half the response in the corresponding RRT window of the initial calibration low concentration standard) and is also detected in an associated field sample at less than the CRQL, the compound shall be reported as a nondetect, i.e., with a "U" flag.

25.5.3 If the SMC recovery in the method blank is less than 20 percent, greater than 200 percent, or if peak interferences are present, the method blank shall be immediately rerun. If on reanalysis the method blank SMC recovery is still outside the recovery limits, the method blank and all associated samples shall be reextracted and reanalyzed at no additional cost to the Agency.

25.5.4 Flag all method blank results "S" if the SMC does not meet the advisory recovery criterion of 50-150 percent.

25.5.5 If the RTS criterion is not met for a method blank, sample analyses shall be stopped and the noncompliant blank rerun. If the RTS criterion is still out on reanalysis, corrective

action shall be performed, which may include a new initial calibration. DO NOT continue with sample analyses until the RTS is within ± 1.0 percent.

25.5.6 Any samples processed with a method blank that is out of control (i.e., does not meet any of the technical acceptance criteria) shall be reextracted and/or reanalyzed at no additional expense to the Agency.

25.6 Documentation

Method blank results are reported on Forms QI-PHEN and QVI-PHEN. Reporting requirements are listed in Exhibit B.

26 Instrument Blank Analysis

26.1 Summary

An instrument blank is 1 mL of methylene chloride if samples are extacted utilizing SPE or 1 mL of hexane for solvent extracted, oil, and wipe samples. Instrument blanks are spiked with 25 µL of SMC (2.0 mg/mL). At least two acceptable instrument blanks shall be analyzed within an analytical sequence, one before sample analyses and one following sample analyses.

26.2 Frequency

An instrument blank shall be analyzed at least twice during the analytical sequence to ensure that the instrument is free from potential contaminants. The first instrument blank analysis shall be performed after the initial three-point calibration in the initial calibration analytical sequence or as the first analysis in a daily calibration check analytical sequence. The second instrument blank analysis shall be performed immediately before the PVS analysis. The Laboratory is encouraged to run additional instrument blanks during the analytical sequence, especially when highly contaminated or complex samples are analyzed. Instrument blanks must be analyzed after analysis of samples with high levels of target compounds or interferents (see paragraph 26.5.6).

26.3 Procedure for Instrument Blank preparation

An instrument blank is 1 mL of methylene chloride if samples are extacted utilizing SPE or 1 mL of hexane for solvent extracted, oil, and wipe samples. Instrument blanks are spiked with 25 µL of SMC (2.0 mg/mL).

26.4 Calculations

Concentrations of the SMC and any target compounds in the instrument blank are calculated according to the procedures described in paragraph 21. Note: The target compound concentrations (detected concentrations and CRQL values) in the instrument blank shall be reported in the appropriate concentration units (e.g., report in µg/L if the associated samples are water and in µg/Kg if the associated samples are soil).

26.5 Technical Acceptance Criteria

26.5.1 A minimum of two (2) instrument blanks shall be analyzed during an analytical sequence on a GC system meeting the initial three-point calibration criteria (paragraph 8) or the valid calibration check standard criteria(paragraph 11), and the PVS acceptance criteria (paragraph 12).

26.5.2 The RT for the SMC in the instrument blank must be within ± 1.0 percent between the blank and the mean SMC RT calculated from the initial calibration.

26.5.3 The SMC recovery criterion of 50-150 percent is advisory only. The SMC recovery in the instrument blank must, however, be greater than or equal to 20 percent and less than or equal to 200 percent.

26.5.4 The target compounds or potential interferences in the first instrument blank (analyzed immediately after the initial calibration or before a valid calibration check) must have a response less than one-half the response in the corresponding RRT windows of the initial calibration low level standard.

26.5.5 Subsequent instrument blanks are acceptable with low level contamination. These instrument blanks may contain target compound concentrations up to twice the CRQL (2x CRQL).

26.5.6 Following the analysis of a field sample containing high levels of target compounds or interferents, an instrument blank shall be analyzed and must meet acceptance criteria before proceeding with sample analyses. If an autosampler is utilized, then the field samples run after a high level sample must be carefully evaluated for carryover. The field sample immediately following the high level sample shall be reanalyzed, along with any other samples analyzed after the high level sample which shows evidence of carryover.

26.5.7 High level samples are defined as being field samples that contain target compounds at concentration levels that exceed twice the high calibration standard concentration and/or

interferents that are detected at levels greater than the mid level initial calibration concentration response of the nearest target compound.

26.6 Corrective Action

26.6.1 All groups of samples analyzed shall be bracketed with two acceptable instrument blanks. If either instrument blank is unacceptable, corrective action shall be taken and all samples not bracketed by two valid instrument blanks shall be reanalyzed at no additional expense to the Agency.

26.6.2 If the response of any target compound in an instrument blank analyzed after the initial calibration or before a valid calibration check standard is greater than or equal to one-half the response in the corresponding RRT window of the initial calibration low concentration standard, corrective action shall be performed and the system shall be demonstrated to be clean by the analysis of additional instrument blanks until all target compounds are less than one-half response.

26.6.3 If any target compound in an instrument blank analyzed after field/QC sample analyses is greater than two times the CRQL, another instrument blank shall be analyzed. If, on reanalysis, contamination still exceeds criterion, corrective action shall be performed and the system demonstrated to be clean. Then, all associated field/QC samples analyzed since the last valid instrument blank or method blank which contain those target compounds or interferents found in the instrument blank at levels greater than twice the CRQL shall be rerun.

26.6.4 If an instrument blank (other than the first instrument blank in the analytical sequence) contains target compounds or interferents between one-half response and two times the CRQL, all positive results (results greater than or equal to the CRQL) for those compounds in samples analyzed after the last valid instrument blank shall be flagged with a "B".

26.6.5 Flag all instrument blank results "S" if the instrument blank SMC is not within 50-150 percent.

26.6.6 If the instrument blank SMC recovery is less than 20 percent, greater than 200 percent, or if peak interferences are present, sample analyses shall be stopped; corrective action performed, and another instrument blank shall be analyzed. If the SMC is still out upon reanalysis, corrective action which may include a new initial calibration shall be performed. All samples analyzed since

the last valid method or instrument blank shall be reanalyzed after a valid instrument blank has been obtained.

26.6.7 If the RTS criterion is not met for an instrument blank, sample analyses shall be stopped and another instrument blank shall be analyzed. If the RTS criterion is still out on reanalysis, corrective action which may include a new initial calibration shall be performed. DO NOT continue with sample analyses until the RTS is within ± 1.0 percent.

26.6.8 Any samples not bracketed by valid instument blanks or a valid instrument blank and a method blank and shall be reanalyzed at no additional expense to the Agency.

26.7 Documentation

Instrument blank results are reported on Forms QI-PHEN and QVI-PHEN. Reporting requirements are listed in Exhibit B.

27 Laboratory Control Samples

27.1 Summary

The QTM Phenol LCS mixture initially will be supplied to contractors by the Agency. The LCS mixture will contain target compounds at several known concentrations. The Laboratory shall spike the LCS mixture into a clean matrix that is similar to the samples being analyzed. The spiked matrix shall be prepared and analyzed using the procedures described for field samples. Analysis of the LCS will assess the performance of the analytical system prior to analyzing field samples.

NOTE: The Agency will provide the Laboratory with further instructions for the analysis of LCSs for wipe samples.

27.2 Frequency

An LCS shall be analyzed once per matrix per analytical sequence (24 hours) per instrument. The LCS shall be analyzed after the first instrument blank in the initial calibration analytical sequence or after the method blank in the daily calibration analytical sequence.

27.2.1 An LCS shall be analyzed with each:

- Set of water field samples (LCS prepared from reagent water).
- Set of soil/solid field samples (LCS prepared with quartz sand).

- Set of oily field samples (LCS prepared with corn oil).

27.2.2 The LCS shall be analyzed with all associated samples in the same analytical sequence. If samples from a batch are analyzed in more than one analytical sequence, the associated LCS shall be analyzed in the same analytical sequence. If an LCS extract is used up because of multiple analyses, the Laboratory shall use the original stock mix diluted into hexane in place of the original LCS sample in all subsequent analytical sequences. The Laboratory shall prepare this solution by diluting 100 µL of the LCS standard mixture into 5 mL of hexane and concentrating to 1 mL using nitrogen blowdown. The Laboratory shall note this in the Batch Narrative and shall use the EPA identification number as described in Exhibit B for this LCS solution.

27.3 Procedure

Spike the appropriate matrix with the LCS standard mixture and prepare as follows.

27.3.1 Water LCS

27.3.1.1 Allow the LCS mixture ampules to reach room temperature before opening. The ampules must not be opened until preparation/analysis is to occur. Exercise care in breaking the ampules open to avoid injury.

27.3.1.2 Spike 100 mL of reagent water with 100 µL of the LCS standard mixture as described in the instructions provided with the LCS mixtures. Use syringes to perform the spiking to ensure accuracy. Add the SMC and mix and carry through the extraction and clean-up process as described in paragraph 14 or 15, depending on whether solvent or solid phase extraction is utilized. Proceed with the analysis as described in paragraph 18.

27.3.1.3 Nominal aqueous LCS target compound concentrations are as follows:

Phenol	2000 µg/L
o-Cresol	160 µg/L
p-Cresol	1600 µg/L
2-Nitrophenol	360 µg/L
2,4-Dimethylphenol	1800 µg/L
2,4,6-Trichlorophenol	100 µg/L
4-Nitrophenol	2100 µg/L
4,6-Dinitro-2-methylphenol	300 µg/L
Pentachlorophenol	1800 µg/L

27.3.2 Soil LCS

27.3.2.1 Allow the LCS mixture ampules to reach room temperature before opening. The ampules must not be opened until preparation/analysis is to occur. Exercise care in breaking the ampules open to avoid injury.

27.3.2.2 Spike 6 g of quartz sand with 100 µL of the LCS standard mixture as described in the instructions provided with the LCS mixtures. Use syringes to perform the spiking to ensure accuracy. Add the SMC and mix and carry through the extraction and clean-up process as described in paragraph 14. Proceed with the analysis as described in paragraph 18.

27.3.2.3 Nominal LCS target compound concentrations are as follows:

Phenol	33,333 µg/kg
o-Cresol	2,700 µg/kg
p-Cresol	27,000 µg/kg
2-Nitrophenol	6,000 µg/kg
2,4-Dimethylphenol	29,000 µg/kg
2,4,6-Trichlorophenol	1700 µg/kg
4-Nitrophenol	35,000 µg/kg
4,6-Dinitro-2-methylphenol	5000 µg/kg
Pentachlorophenol	30,000 µg/kg

27.3.3 Oil LCS

This section has not been finalized. The LCS composition and concentrations for oils are currently being investigated.

27.3.3.1 Allow the LCS mixture ampules to reach room temperature before opening. The ampules must not be opened until preparation/analysis is to occur.

Exercise care in breaking the ampules open to avoid injury.

27.3.3.2 Spike 1 g of corn oil with 1 mL of the LCS standard mixture as described in the instructions provided with the LCS mixtures. Use syringes to perform the spiking to ensure accuracy. Mix and carry through the extraction and cleanup process adding 1.0 mL of SMC (50 µg/mL) and further prepare as described in paragraphs 16.3 - 16.14.

27.3.3.3 Nominal LCS target compound concentrations are as follows:

Phenol	33,000 µg/kg
o-Cresol	2,700 µg/kg
m-Cresol	27,000 µg/kg
2-Nitrophenol	6,000 µg/kg
2,4-Dimethylphenol	29,000 µg/kg
2,4,6-Trichlorophenol	1700 µg/kg
4-Nitrophenol	35,000 µg/kg
4,6-Dinitro-2-methylphenol	5000 µg/kg
Pentachlorophenol	30,000 µg/kg

27.4 Technical Acceptance Criteria

27.4.1 All LCS compounds, must have recoveries between 30 and 130 percent. Up to two LCS compounds may, however, exceed the upper recovery criterion of 130 percent.

27.4.2 All LCS target compound absolute and relative retention times must be within the windows established during the initial calibration.

27.4.3 The RT of the SMC must be within ± 1.0 percent of the mean RT of the SMC established during the initial calibration.

27.4.4 The SMC advisory recovery criterion is 50-150 percent. The SMC recovery in the LCS must, however, be greater than or equal to 20 percent and less than or equal to 200 percent.

27.5 Corrective Action

27.5.1 If any LCS compound recovery is less than 30 percent or more than two LCS compounds exceed 130 percent, the LCS shall be reanalyzed. If, upon reanalysis, more than two LCS target compounds are outside the recovery criterion, the LCS and all associated field and QC samples shall be reextracted and reanalyzed. If one or two LCS compounds are outside the recovery criterion, proceed with sample analyses, and flag

all sample results of compounds that were out in the LCS with an "L" flag.

27.5.2 If the SMC recovery is less than 20 percent, greater than 200 percent, or if peak interferences are present in the LCS, sample analyses shall be stopped and the LCS reanalyzed. If the LCS SMC recovery is still outside the criterion, corrective action shall be performed, and the LCS and all associated samples shall be reextracted and reanalyzed.

27.5.3 If the RT or RRT for any LCS compound is not within the RT and RRT windows established during the initial calibration, reanalyze the LCS. If upon reanalysis a compound is still outside the windows, a new initial calibration must be performed before samples can be analyzed. The instrument must be recalibrated as described in paragraph 8.

27.5.4 If the RTS criterion is not met for the LCS, sample analysis shall be stopped and the noncompliant LCS reanalyzed. If the RTS is still outside the criterion upon reanalysis, corrective action which may include a new initial calibration shall be performed. DO NOT proceed with sample analyses until the RTS is within ± 1.0 percent.

27.5.5 All LCS acceptance criteria shall be met before any samples or required blanks are analyzed. Any samples or required blanks analyzed when the LCS have not been met shall require reextraction and/or reanalysis at no additional cost to the Agency.

27.6 Documentation

Laboratory Control Sample results are reported on Forms QI-PHEN, QII-PHEN, and QVI-PHEN. Reporting requirements are listed in Exhibit B.

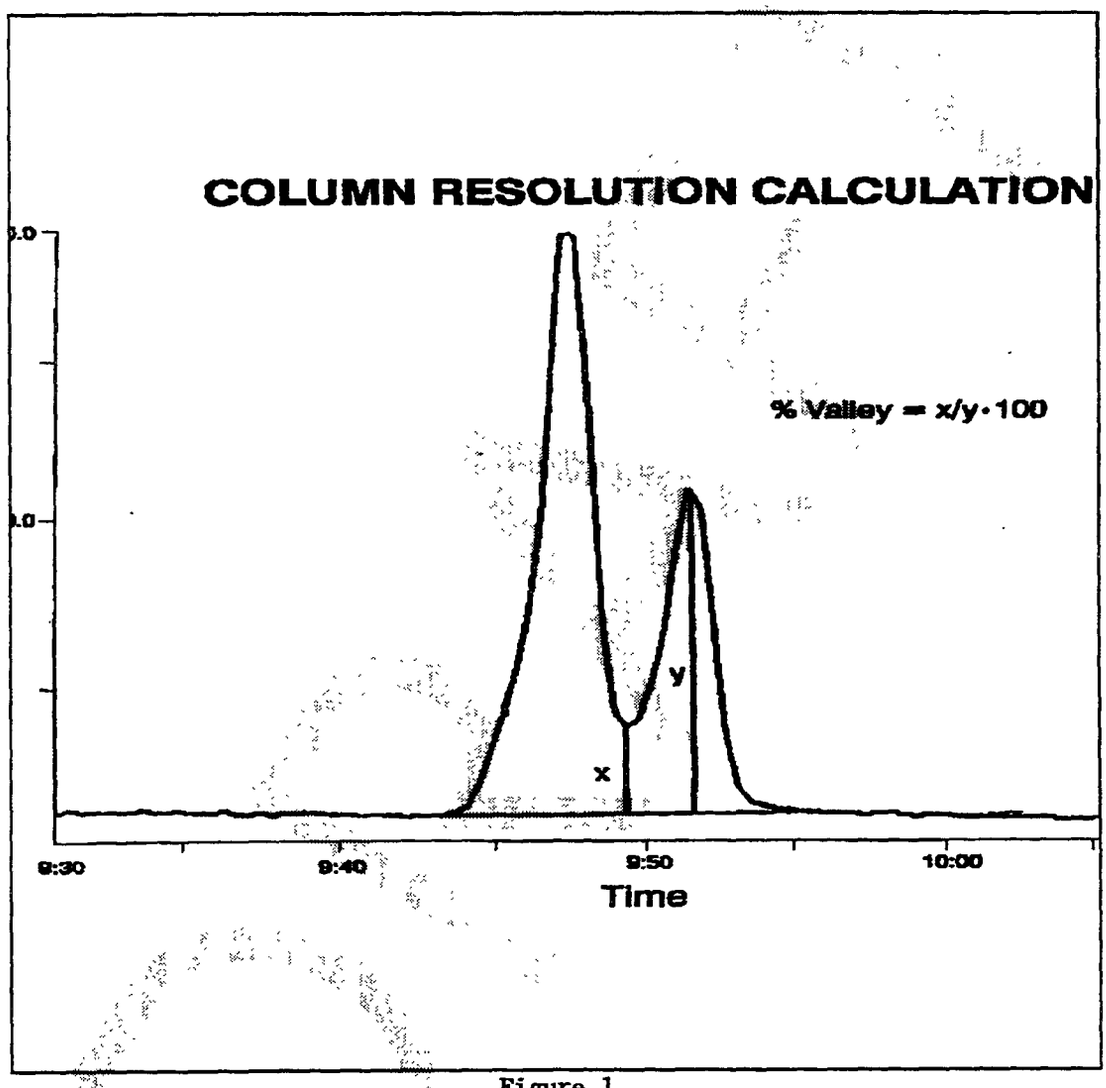
COLUMN RESOLUTION CALCULATION
% Valley = x/y·100
x
y
9:30
9:40
9:50
10:00
Time

Figure 1

Table 1.

List of Phenol Compounds in Order of Elution*

Compound	Retention Time (mins)
Phenol	2.88
2-Chlorophenol	2.99
o-Cresol	4.36
m-Cresol**	4.77
p-Cresol**	
2-Nitrophenol	5.69
2,4-Dimethylphenol	6.05
2,4-Dichlorophenol	6.28
4-Chloro-3-Methylphenol	8.22
2,4,6-Trichlorophenol***	9.01
2,4,5-Trichlorophenol***	9.07
2,4-Dinitrophenol	10.94
4-Nitrophenol	11.35
2,3,4,6-Tetrachlorophenol	11.48
4,6-Dinitro-2-Methylphenol	12.20
Pentachlorophenol	13.69

* This elution order is given as general guidance and is based on suggested instrumental operating conditions as given in paragraph 7.

** Compounds coelute, report the total in terms of total Cresol. Quantitation will be based on the calibration factor of m-Cresol.

*** Compounds coelute, report the total in terms of 2,4,6/2,4,5-Trichlorophenol. Quantitation will be based on the calibration factor of 2,4,6-Trichlorophenol.

Table 2.

List of PAH Compounds in Order of Elution

Compound	Retention Time (mins)
Naphthalene	3.95
Acenaphthylene	7.21
Acenaphthene	7.58
Fluorene	8.53
Phenanthrene	10.22
Anthracene	10.31
Fluoranthene	12.37
Pyrene	12.73
Benz(a)anthracene	14.97
Chrysene	15.04
Benzo(b)fluoranthene *	16.86
Benzo(k)fluoranthene *	
Benzo(a)pyrene	17.28
Indeno(1,2,3-cd)pyrene	18.92
Dibenz(a,h)anthracene	19.02
Benzo(g,h,i)perylene	19.24

* Compounds coelute.

EXHIBIT D

QUICK TURNAROUND METHODS

ANALYTICAL METHOD FOR ORGANOCHLORINE PESTICIDES (PESTs)

TABLE OF CONTENTS
PESTICIDES

SECTION		Page
I	Introduction	D-3
II	Sample/Extract Storage and Turnaround Times and Equipment and Standards	D-4
	1 Sample/Extract Storage and Turnaround Times	D-4
	2 Summary of Method	D-4
	3 Interferences	D-6
	4 Apparatus and Materials	D-6
	5 Reagents	D-12
	6 Standards	D-13
III	Instrument Quality Control Procedures and Requirements	D-17
	7 Instrument Operating Conditions	D-17
	8 Calibration of the GC System - Initial Calibration	D-17
	9 Calibration of the GC System - Calibration Check	D-22
	10 Calibration of the GC System - PVS	D-25
	11 System Performance - GC Resolution	D-29
IV	Sample Analysis and Compound Identification and Quantitation	D-31
	12 Summary	D-31
	13 Phase Separation	D-31
	14 Solvent Extraction and Cleanup	D-32
	15 Solid Phase Extraction and Cleanup	D-37
	16 Sample Preparation and Extraction - Oil Samples	D-41
	17 Sample Preparation and Extraction - Wipe Samples	D-41
	18 Instrumental Analysis	D-42
	19 Dilutions	D-45
	20 Identification of Target Compounds	D-46
	21 Calculations	D-47
	22 Technical Acceptance Criteria	D-50
	23 Corrective Action	D-50
	24 Documentation	D-51
V	Sample Quality Control Procedures and Requirements	D-52
	25 Method Blank Analysis	D-52
	26 Instrument Blank Analysis	D-55
	27 Laboratory Control Samples	D-58

SECTION I

INTRODUCTION

This Quick Turnaround Method (QTM) is designed for use in determining the concentration of various organochlorine pesticides in water, soil/solid, oil, and wipe samples. Exhibit C lists the compounds that will be determined by this method along with the Contract Required Quantitation Limits (CRQLs). The method yields identification and quantitation of the analytes listed in Exhibit C using single column gas chromatography/electron capture detector (GC/ECD). Target compound concentrations in samples are reported on an "as-received" basis; no dry weights are calculated. The primary objective of this QTM is to provide analytical data in a timely manner for decision-making during site inspections, remediations, and emergency removal activities. The pesticide QTM is to be used when rapid data turnaround is required, when the data requestor knows of (or strongly suspects) the presence of organochlorine pesticides contamination, and there is knowledge regarding potential matrix interferences at the site. The pesticide QTM is not equivalent to, nor a replacement for, the CLP Organics Multi-Media Multi-Concentration Analysis.

Although single component pesticides are often analyzed by the same method as PCBs and toxaphene, this approach was not adopted for the QTM SOW. Aroclors and toxaphene can be analyzed using the Aroclors QTM; technical chlordane can be measured with the pesticide method when alpha-chlordane, gamma-chlordane, and heptachlor standards are used for quantitation.

SECTION II

SAMPLE/EXTRACT STORAGE AND TURNAROUND TIMES AND EQUIPMENT AND STANDARDS

1 Sample/Extract Storage and Turnaround Times

1.1 Procedures for Sample Storage

Samples shall be protected from light and refrigerated at 4°C (± 2°C) from the time of receipt until 60 days after delivery of a complete data package to the Agency.

1.2 Procedure for Sample Extract Storage

Sample extracts shall be protected from light and stored at 4°C (± 2°C) for 21 days after delivery of a complete data package to the Agency.

Samples, sample extracts, and standards shall be stored separately.

1.3 Contract Required Sample Turnaround Times

Samples shall be extracted, analyzed, and a summary of the analytical and QC data shall be reported to the appropriate EPA Region via telecommunications network within 48 hours (or 72 hours if more than three fractions are analyzed) of Validated Time of Sample Receipt (VTSR). See Exhibits A and B for specific instructions concerning sample turnaround time and data reporting requirements.

2 Summary of Method

2.1 This analytical method is a GC/ECD method for the analysis of pesticides in water, soil/solid, oil, and wipe samples. All target compounds and the System Monitor Compound (SMC) shall be extracted from field and QC samples utilizing either solvent or solid phase extraction (SPE) technique. If solvent extraction is utilized, field and QC samples are serially extracted using two 10 mL portions of hexane (for water samples) or hexane/acetone (for soil samples). If SPE is utilized, field and QC samples are eluted through a disk containing a solid matrix (e.g. silica) coated with a chemically bonded C_8 or C_{18} organic phase (or equivalent). The target compounds and SMC are then eluted from the extraction disk with hexane/acetone.

2.2 Sample analyses shall be performed using gas chromatographic (GC) techniques and must be conducted within a contract specified analytical sequence that shall not exceed 24 hours. Target compounds are identified and quantitated on the basis of retention time windows and calibration factors established during initial calibration. During

initial calibration, a mean relative retention time ($\overline{RRT}$), a mean retention time ($\overline{RT}$), and an identification window (± 0.005 RRT unit of the mean RRT or ± 1.0 percent of the mean RT) are established for each compound. Mean calibration factors are also established during initial calibration and the percent relative standard deviation (%RSD) of the calibration factors for each target compound and the SMC must be less than or equal to 25.0 percent for all compounds except DDT, methoxychlor, and endrin which must be less than or equal to 30.0 percent for a valid initial calibration. Sample compound concentrations are calculated from the initial calibration using the average of the three calibration factors, line segment (K Curve), or the mid point calibration as long as it is within ± 10 percent of the theoretical mid point calculated using all three calibration points.

2.3 A check of the initial calibration shall be performed no less than every 24 hours, using the mid point calibration solution. All calibration factors calculated from the calibration check must be within ± 35.0 percent of the mean values established during initial calibration for all target compounds and the SMC except DDT, endrin, and methoxychlor which must be within ± 40.0 percent. Identification windows must also be confirmed during the calibration check.

2.4 An analytical sequence also includes method blanks and instrument blanks in which no compound can have a response greater than one-half the response in the corresponding RRT window of the initial calibration low concentration standard. The analytical sequence shall also include the analysis of Laboratory Control Samples (LCS) and Performance Verification Standards (PVS). The LCS will be a "go/no-go analysis". That is, if the LCS meets performance criteria as stated in paragraph 27, sample analyses may proceed. If, however, the LCS does not meet acceptance criteria, corrective action shall be taken before sample analyses are performed. The PVS mixture is two times the low concentration initial calibration standard and shall be analyzed at least once during each analytical sequence to verify instrument performance. All samples shall be bracketed by valid PVS analyses or a valid initial calibration or valid calibration check and a valid PVS analysis.

2.5 A System Monitor Compound (SMC) shall be added to all field and QC samples and standards. The SMC is used as a retention time marker to calculate RRTs for the identification of target compounds and to assess extraction efficiency. When the recovery of the SMC in a field sample is less than 10 percent, greater than 200 percent, or if peak interferences are present, absolute retention times are used for target compound identification. The SMC recovery criterion of 50-150 percent is advisory only. Reanalyses of samples are not performed if the SMC recovery is outside the advisory recovery limits.

3 Interferences

3.1 Phthalate esters are common interferents encountered in pesticide analyses. Interferences may be minimized by the use of pesticide grade or ultrapure reagents, thorough cleanup of glassware, and avoidance of plastic materials in laboratory operations.

3.2 A variety of coextracted materials including polychlorinated biphenyls (PCBs), nontarget pesticides, and chlorinated diphenyl esters may result in interfering chromatographic peaks and elevated baselines in GC/ECD analyses.

3.3 The analytical system must be demonstrated to be free from contamination under conditions of the analysis by analyzing method blanks. Cross-contamination problems can be minimized by analyzing instrument blanks after samples with high levels of target compounds or other interferents (see paragraph 26).

3.4 A pair of target compounds, DDE and dieldrin, closely elute on the column suitable for performing this analysis. These coeluting compounds shall be reported as a combined concentration (see Exhibit B).

4 Apparatus and Materials

Brand names, suppliers, and part numbers are for illustrative purposes only. No endorsement is implied. Equivalent performance may be achieved using apparatus and materials other than those specified here; however, demonstration of equivalent performance meeting the requirements of this SOW is the responsibility of the Contractor.

4.1 Gas Chromatograph - The gas chromatography (GC) system shall be capable of temperature programming and flow control that is stable throughout an analytical sequence. The system shall be suitable for splitless or on-column injection and have all required accessories, including syringes, analytical columns, and gases. All GC carrier gas lines shall be constructed from stainless steel or copper tubing. Non-polytetrafluoroethylene (PTFE) thread sealants, or flow controllers with rubber components shall not be used.

4.1.1 Gas Chromatography Column - 15 m x 0.53 mm ID DB-5 megabore bonded phase silicone-coated fused silica capillary column (J&W DB-5, or equivalent). (The use of a guard column is also recommended.)

4.1.2 Chromatography Detector - The GC shall be be equipped with an electron capture detector (ECD).

4.1.3 Gas chromatography injector - A deactivated injector specifically designed for use with 0.53 mm ID columns shall be used for collecting data with this method. The Laboratory shall establish which of the various injector liner design provides optimum

performance with its specific GC hardware. Laboratories that have difficulty using this method shall investigate the use of injector liners with shapes or dimensions optimized to reduce injection flashback and analyte pyrolysis. Cold (ambient) on-column injectors that allow injection directly into 0.53 mm ID column may be used for this method as long as peaks are gaussian, retention times are stable, and calibration criteria are met.

4.2 Data System - The GC shall be linked to a data system capable of integrating peak areas for any compound detected at or above one-half the CRQL. It is required that the Laboratory be equipped with a PC - or microcomputer-based GC data collection and reduction system for this purpose. The Laboratory shall possess this equipment to provide the quick turnaround of electronic data. The Laboratory shall also be equipped with a microcomputer and contract specified hardware and software to electronically transfer the QTM data to the Regions.

4.3 Solid Phase Extraction Disk Processing Station - As SPE is a developing area in environmental chemistry, EPA expects that advances will occur within the lifetime of the QTM contracts. Therefore, the brand names listed below are included for illustration purposes only. Any comparable equipment is acceptable, regardless of brand.

4.3.1 Extraction disks - disks shall be made of Teflon and include at least 500 mg of C_{18} bonded silica (Varian/3M Empore™, or equivalent). Disks shall be 47 mm in diameter. (Note: an alternative phase may be used if this phase can be demonstrated to meet the QA/QC requirements of this method.)

4.3.2 Vacuum holder - the vacuum holder will be glass and comprised of five (5) parts: the vacuum head, the sample reservoir, a metal clip to hold the reservoir to the head, a large volume receiver (greater than 200 mL) for the sample after elution, and a small volume receiver (10-20 mL) for the solvent after extraction. The vacuum holder (except for the solvent receiver) is sold as a HPLC solvent filtration device (Gelman 4012, or equivalent). The solvent receiver is simply a tube with a ground glass fitting that fits onto the vacuum head.

4.3.3 Vacuum manifold - a 4- to 6-port vacuum manifold may be used to facilitate simultaneous disk extractions.

4.3.4 Use of depth filter (Whatman Multigrade GMF 150, or equivalent) or inert materials such as Celite 545 (diatomaceous earth, Baker #, or equivalent) are encouraged when samples contain particulates. If depth filters are utilized, each lot shall be tested for contamination prior to use with this method. The depth filters may be checked in conjunction with the SPE disks (depth filters are placed on top of the SPE disks) by following the procedure outlined in paragraph 4.3.5.

4.3.5 Solid Phase Extraction (SPE) Recovery Check

4.3.5.1 Summary

Before field or QC samples are extracted using the SPE disks, their efficiency shall be verified. An extraction recovery and contamination check shall be performed in order to evaluate the recovery of compounds on the disk and to check for contamination.

4.3.5.2 Frequency

A check shall be performed on each individual lot of disks, and for every 300 units of a particular lot.

4.3.5.3 Procedure

4.3.5.3.1 Before samples are extracted using a lot of SPE disks, the Laboratory shall perform a recovery check of that lot. Two (2) check solutions shall be prepared. The first is 100 mL of reagent water spiked with 1 mL of the low initial calibration standard (to demonstrate lack of contamination), and the second is 100 mL of reagent water spiked with 1 mL of the high initial calibration standard (to demonstrate adequate SPE capacity).

4.3.5.3.2 The low and high SPE recovery check standard solutions used to evaluate SPE disks are prepared by diluting the original stock calibration solution in methanol. The low and high SPE recovery standard concentrations are equivalent to the low and high calibration standard mix concentrations respectively. Laboratories shall prepare the SPE recovery check standards in methanol and add 1 mL of each calibration solution to 100 mL of reagent water. If the Laboratory experiences solubility problems in preparing the SPE recovery check standard solution, the Laboratory shall prepare the SPE recovery check standards in methanol, add 1 mL of each calibration solution to 4 mL methanol, and add the resulting solution to 100 mL of reagent water. The recovery check samples shall be prepared and

analyzed according to the procedures in Section IV.

4.3.5.3.3 The SPE recovery check standard solutions shall be analyzed in a valid initial calibration or daily calibration analytical sequence (see paragraph 18.1). Note: if the SPE recovery check standards are the only samples analyzed in the analytical sequence, the method blank shall be replaced with an instrument blank and the LCS shall be prepared by diluting 100 µL of LCS stock mixture into 5 mL of hexane and concentrating to 1mL using nitrogen blowdown. The EPA identification numbers for standards as described in Exhibit B shall be used for the low and high SPE recovery check standard solutions (i.e., QPESTD####, where #### is the amount injected). The EPA identification numbers as described in Exhibit B shall be used for this instrument blank and LCS.

4.3.5.4 Technical Acceptance Criteria

The recovery of the check compounds spiked at the upper limit of the calibration range must demonstrate recovery of 30-110 percent to establish that the SPE media has the capacity to retain compounds at the upper end of the calibration range (i.e., no breakthrough of target compounds is occurring). The recovery check at the low concentration level shall be evaluated to demonstrate that the system performs at low levels and does not introduce method interferences. If any compound recovery is less than 30 percent or is greater than 110 percent, then that lot of disks shall not be used.

4.3.5.5 Corrective Action

If the disks do not exhibit acceptable recovery of any spiked compound at the low or high concentration levels, the entire lot shall not be used to extract samples, since the system cannot be demonstrated to be functioning at those levels.

4.3.5.6 Documentation

All data and related documentation for the SPE recovery check analysis shall be maintained by the

Laboratory during the term of the contract and shall be available to the Agency during on-site laboratory evaluations or if requested by the TPO or APO.

4.3.6 Extract Cleanup Cartridges - Florisil, 0.5 g solid phase glass extraction cartridges with stainless steel or Teflon frits (Varian Florisil PR, or equivalent). Bake the glass florisil cartridges at 140°C overnight to activate (do not exceed 150°C).

4.3.6.1 Florisil Cartridge Performance Check

Each lot of Florisil cartridges must be tested by the following procedures before it is used for sample clean-up. Mix 0.5 mL of 2,4,5-trichlorophenol solution (0.1 µg/mL in hexane) and 0.5 mL of the mid point calibration mixture (total volume 1 mL). Place the mixture onto the top of a prewashed Florisil cartridge, and elute it with 9 mL of hexane/acetone (90:10). Adjust the final volume to 1.0 mL and analyze by GC/ECD. The recovery of each compound must be determined for evaluation and reporting purposes. The lot of Florisil cartridges is acceptable if the target compounds are recovered at 80 to 110 percent and if no 2,4,5-trichlorophenol interference is detected greater than 10 percent of the height of gamma-BHC.

4.3.6.2 The florisil cartridge performance check standard solution shall be analyzed in a valid initial calibration or daily calibration analytical sequence (see paragraph 18.1). Note: if the florisil cartridge performance check standard is the only sample analyzed in the analytical sequence, the method blank shall be replaced with an instrument blank and the LCS shall be prepared by diluting 100 µL of LCS stock mixture into 5 mL of hexane and concentrating to 1mL using nitrogen blowdown. The EPA identification numbers for standards as described in Exhibit B shall be used for the low and high SPE recovery check standard solutions (i.e., QPESTD####, where #### is the amount injected). The EPA identification numbers as described in Exhibit B shall be used for this instrument blank and LCS.

4.3.6.3 Documentation

All data and related documentation for the florisil recovery check analysis shall be maintained by the Laboratory during the term of the contract and shall be available to the Agency during on-site laboratory evaluations or if requested by the TPO or APO.

4.4 Glassware - Sufficient glassware to meet contract requirements shall be reserved for exclusive use in support of this contract.

4.4.1 Erlenmeyer Flasks - 50 and 125 mL.

4.4.2 Beaker - 150 mL.

4.4.3 Concentrator tubes - 10 mL.

4.4.4 Kimax concentrator tube (graduated) - 25 mL.

4.4.5 Graduated test tubes - graduated from 1 to 10 mL.

4.4.6 Autosampler vials - appropriate for the GC system.

4.4.7 Centrifuge tubes - 40 mL.

4.4.8 Powder funnel - 6 cm (60°).

4.4.9 Pasteur Pipets.

4.4.10 Side-arm flask - 500 mL.

4.4.11 Wide-mouth centrifuge tubes (optional).

4.4.12 Buchner funnel.

4.5 Laboratory Hardware - The following equipment is required for sample preparation.

4.5.1 Ultrasonic Cell Disrupter - Heat Systems Ultrasonics, Inc. Model W-385 Sonicator (475 watt with pulsing capability, No. 200 1/2" tapped disrupter horn plus No. 419 1/8" standard tapered microtip probe), or equivalent device with a minimum of 375 watt output capability. The 1/8" microtip shall be used for extraction of all soil/solid samples. (NOTE: In order to ensure that sufficient energy is transferred to the sample during the extraction, the microtip probe <u>must</u> be replaced if the tip begins to erode. Erosion of the tip is evidenced by a rough surface.)

4.5.2 Balance - Calibrated and accurate to 0.1 g.

4.5.3 Balance - Calibrated and accurate to 0.1 mg.

4.5.4 Centrifuge.

4.5.5 Vortex Mixer.

4.5.6 Microsyringe - 10-μL, 50-μL, and 100-μL.

4.5.7 Spatula - Stainless steel.

4.5.8 Hot plate stirrer.

4.5.9 Teflon coated magnets.

4.5.10 Glass wool.

4.5.11 Whatman #42 filter paper.

4.5.12 Whatman vacuum holder.

4.5.13 Nitrogen blowdown apparatus.

4.5.14 Required equipment for extract cleanup cartridges.

4.5.15 Water bath.

4.5.16 pH paper or meter.

5 Reagents

5.1 Reagent water - Reagent water is defined as water in which target compounds or potentially interfering compounds do not produce a signal greater than one-half the response in the corresponding RRT window of the initial calibration low concentration standards. Reagent water shall be generated by one of the following methods.

5.1.1 Reagent water may be generated by passing tap water through a carbon filter bed containing approximately 500 g of activated carbon (Calgon Corp., Filtrasorb-300, or equivalent).

5.1.2 Reagent water may be generated using a water purification system (Millipore-D-Plus with Organex Q cartridges, or equivalent).

5.1.3 Reagent water may be prepared by boiling for 15 minutes then bubbling contaminant-free inert gas through the water for one hour while maintaining the water temperature at 90°C. While still hot, transfer the degassed water to a narrow-mouth screw-cap bottle, seal with a Teflon-lined septum, and cap.

5.2 Solvents - Hexane, isooctane, methanol, and acetone. Pesticide quality, or equivalent.

5.3 Sodium hydroxide solution (0.5 N).

5.4 Sodium chloride.

5.5 Sulfuric acid solution (0.5 N).

5.6 5:100 methanol/water solution (methanol in water v/v).

5.7 90:10 hexane/acetone solution (90 percent hexane in acetone v/v).

5.8 50:50 hexane/acetone solution (50 percent hexane in acetone v/v).

5.9 Powdered Anhydrous Sodium sulfate.

5.10 Corn oil.

6 Standards

6.1 Stock Standard Solutions

Stock solutions may be prepared from pure standard materials or purchased as certified solutions. Standard solutions shall be prepared by dissolving pure standards in a suitable solvent in volumetric flasks. The addition of toluene may be necessary to dissolve some of the target compounds in highly concentrated stock standards. When compound purity is assayed to be 96 percent or greater, the weight may be used without correction to calculate the concentration of the stock standard. Exhibit E, Section V provides further directions for preparing and verifying the integrity of stock standard solutions.

6.2 Secondary Dilution Standards

6.2.1 Using stock standard solutions, prepare secondary dilution standards in hexane or isooctane.

6.2.2 Secondary dilution standards shall be stored at 4°C (± 2°C) with minimal headspace and checked frequently for signs of degradation or evaporation. This is especially important just prior to preparing calibration standards from them.

NOTE: Standards should not be stored in volumetric flasks, especially when they are prepared with solvents with low boiling points.

6.3 Calibration Standards

6.3.1 Calibration standard mixtures shall be prepared at three concentration levels in volumetric flasks and diluted to final volume with hexane or isooctane. The low concentration standard as specified in paragraph 6.3.4 achieves the sample extract compound concentrations equivalent to the sample compound CRQLs as listed in Exhibit C (also see paragraphs 14.3.8, 15.5.10, and 15.9.8). The high concentration level shall be near the upper end of the linear range. The compounds and concentrations used for these calibration mixtures are presented in paragraph 6.3.4.

6.3.2 During the initial calibration, each single component pesticide must be analyzed at three different concentrations in order to establish calibration factors for each compound and to demonstrate detector linearity.

6.3.3 The calibration standard mixture solutions must be prepared in either hexane or isooctane at the concentrations listed below. The mid point concentration for all target compounds must be at least five times the low point concentration for each target compound and the SMC. The high concentration standard must be at least 25 times the low point concentration for each target compound and the SMC. The high point concentration defines the upper end of the concentration range for which the calibration is valid. It is suggested that a concentration 100 times the CRQL be used as a high point calibration provided that the concentration is within the linear range of the detector.

6.3.4 Low concentration standard mixtures for single component pesticides

Compound	Low point Concentration (ng/mL)
alpha-BHC	10.0
beta-BHC	10.0
gamma-BHC (Lindane)	10.0
delta-BHC	10.0
Heptachlor	10.0
Aldrin	10.0
Heptachlor epoxide	10.0
gamma-Chlordane	10.0
Endosulfan I	10.0
alpha-Chlordane	10.0
p,p'-DDE*	10.0
Endrin	10.0
Endosulfan II	10.0
p,p'-DDD	10.0
Endrin aldehyde	10.0
Endosulfan sulfate	10.0
p,p'-DDT	10.0
Endrin ketone	10.0
Methoxychlor	10.0
Decachlorobiphenyl (SMC)	10.0

* DDE coelutes with dieldrin. The sum of both compounds will be measured and will be quantitated using the calibration factor of DDE.

6.3.5 All standards shall be stored at 4°C (± 2°C) in Teflon-sealed glass bottles. Calibration solutions shall be

replaced after 6 months, or sooner, if comparison with check standards indicate a problem.

6.4 Calibration Check Standards

The calibration check is a daily one-point check of the initial calibration. The calibration check standard shall be prepared in a volumetric flask and diluted to final volume with hexane or isooctane. The concentration of the calibration check standard is the same as the mid level standard used in the initial calibration.

6.5 System Monitor Compound

The System Monitor Compound (SMC) is decachlorobiphenyl. A stock solution in acetone shall be prepared as described in paragraph 6.1, and a SMC spiking solution at a concentration of 5.0 µg/mL in acetone shall be prepared from the stock. Each sample shall be spiked with the SMC before analysis. The Laboratory shall add 10 µL of this standard to a 100 mL water sample, or 10 µL to 6 g of soil/solid. For oil analysis, prepare decachlorobiphenyl at a concentration of 0.5 µg/mL and add 1.0 mL of this solution to 1 g of oil sample (see Section IV.) The SMC will be employed to detect shifts in retention time of eluting target compounds. Additionally, the SMC shall be used to monitor the extraction efficiency.

Note: Reagent grade acetone shall be used to prepare the SMC stock and working solutions. The Laboratory shall ensure that the acetone used to prepare the SMC stock and working solutions is free of any contamination.

6.6 Performance Verification Standard

The Performance Verification Standard (PVS) shall be analyzed at least once during each analytical sequence to assess system stability. The PVS is two times (2x) the concentration of the low level calibration standard.

6.7 Laboratory Control Sample

Laboratory Control Samples (LCS) containing known amounts of target compounds traceable to primary standards will initially be supplied by the Agency. Following receipt of these initial supplies, however, the Laboratory shall prepare its own LCS standards. The LCS shall be spiked into a clean matrix and prepared using all steps of this protocol. An appropriate amount of the LCS shall be added to reagent water and analyzed with each Batch of water samples. An appropriate amount of the LCS shall be added to clean quartz sand and analyzed with each Batch of soil/solid samples. An appropriate amount of the LCS shall be added to clean corn oil and analyzed with each Batch of oil samples. If a Batch contains water, soil/solid, and oil samples, an LCS shall be prepared

and analyzed for each matrix. Note: If wipe sample analyses are performed, the Agency will provide the Laboratory with further instructions for the preparation and analysis of LCSs for wipe samples. All LCS compounds must have recoveries between 30 and 130 percent before sample analysis may begin (see paragraph 27).

NOTE: The Laboratory is expected to maintain control charts of the recoveries of at least three representative LCS compounds as an internal QC procedure.

6.8 Florisil Cartridge Check Standard

The Florisil cartridge check standard is 2,4,5-trichlorophenol. A stock solution of this should be prepared in a volumetric flask and diluted to volume with hexane to obtain a 0.1 µg/mL concentration.

6.9 Storage of Standard Solutions

6.9.1 Stock, secondary standard solutions and working standard solutions shall be stored at 4°C (± 2°C) in Teflon-lined screw-cap amber bottles (also see paragraph 6.3.5).

6.9.2 All standards shall be protected from light.

6.9.3 Samples, sample extracts, and standards shall be stored separately.

SECTION III

INSTRUMENT QUALITY CONTROL PROCEDURES AND REQUIREMENTS

7 Instrument Operating Conditions

The following are the suggested gas chromatographic analytical conditions.

Column: DB-5 (or equivalent), 15 m x 0.53 mm ID megabore capillary column.

Carrier Gas:	Helium
Flow Rate:	5.5 mL/min
Injector Temperature:	180 - 200*
Detector Temperature:	300°C
Makeup Gas:	P-5 or Nitrogen
Makeup Flow:	60 mL/min
Initial Temperature:	150°C
Initial Hold Time:	0.5 min
Ramp Rate:	5°C/min
Final Temperature:	275°C
Final Hold Time:	5 min

* Cold (ambient) on-column injectors that allow injection directly into 0.53 mm ID column may be used for this method as long as peaks are gaussian, retention times are stable, and calibration criteria are met.

NOTE: The typical run time under these conditions is 20 minutes. It may be necessary to adjust GC conditions on individual instruments to optimize compound separation. It may also be necessary to adjust detector conditions to optimize instrument sensitivity.

8 Calibration of the GC System - Initial Calibration

8.1 Summary

8.1.1 Prior to the analysis of samples and required blanks, each GC system must be initially calibrated to ensure that the instrument meets the minimum performance requirements of the method. The initial calibration is accomplished by analyzing three standards: the low level, mid level, and high level mixtures as specified in paragraph 6.3.4. The technical acceptance criteria for the initial calibration are given in paragraph 8.5. The initial calibration shall be used to establish the calibration factors used for compound quantitation, to define the retention time windows for compound identification, and to determine the mean SMC retention time for evaluating SMC retention time shift (RTS) during analyses. Detector response must be linear for all target

compounds. All samples shall be analyzed during the contract specified 24-hour analytical sequence.

8.1.2 Sample quantitation shall be based on the mean compound calibration factor, line segments ("K" curve), or the mid level calibration factor from the initial calibration. (The use of the line segment or "K" curve is suggested). All field and QC samples and standards within the same Batch and all field and QC samples and standards analyzed during the same analytical sequence shall be quantitated using the same method of quantitation.

8.1.3 Compound identification shall be based on RRT windows established during initial calibration in all field samples where the SMC recovery is greater than or equal to 10 percent and less than or equal to 200 percent.

8.1.4 Compound identification shall be based on absolute retention time windows established during initial calibration in all field samples where the SMC recovery is less than 10 percent, greater than 200 percent, or if peak interferences are present.

8.1.5 Shifts in the chromatographic peaks shall be evaluated by comparing the retention time (RT) of the SMC in all analyses with the mean RT of the SMC calculated from the initial calibration. The retention time shift is referred to as RTS or RT %D (see paragraph 21.4.1). The RT of the SMC for field and QC sample analyses must be within ± 1.0 percent of the mean RT calculated from the initial calibration.

8.2 Frequency

8.2.1 An initial three-point calibration shall be performed to determine the linearity of response of all target compounds and the SMC. A new initial calibration is required whenever a calibration check standard or PVS cannot satisfy QC criteria. A new initial calibration is also required whenever major instrument maintenance such as column or detector replacement has been performed. An initial calibration must be performed for each GC and for each chromatographic column which are used to perform these analyses.

8.2.2 An analytical sequence is a contractually-defined sequence of GC analyses which consists of an initial three-point calibration or valid calibration check, field samples, LCS, method and instrument blanks, PVS, and other QC samples run within a 24-hour period (see paragraph 18 for the required sequence of samples).

8.2.3 Analysis of the initial calibration shall begin with the injection of the high level standard followed by the mid level and low level standards.

8.2.4 The analytical sequence shall be concluded with an acceptable analysis of an instrument blank and a PVS standard (see paragraph 10).

8.2.5 Samples shall be analyzed only after meeting the technical acceptance criteria for the initial calibration or calibration check standard.

8.3 Procedure

8.3.1 The GC system shall be set up per the requirements of paragraph 7.

8.3.2 Prepare calibration standard solutions containing the SMC and all target compounds using the procedure listed in paragraph 6.3.

8.3.3 The calibration solutions shall be equilibrated to ambient temperature before injection (approximately one hour).

8.3.4 Inject between 1 and 5 μL of each calibration standard. The same injection volume shall be used for all calibrations and field/QC sample analyses.

8.4 Calculations

8.4.1 Calculate the calibration factor (ratio of the total peak area or height to the mass injected) for each target compound and the SMC in the initial calibration standard analyses using equation D.1 (EQ. D.1).

$$\textit{Calibration Factor} = \frac{\textit{Total Area of Peak or Peak Height}}{\textit{Mass injected (ng)}} \qquad \text{EQ. D.1}$$

8.4.2 Calculate the mean calibration factor for each target compound and the SMC

8.4.3 Calculate the %RSD of the calibration factors of the low level, mid level, and high level standards for the initial calibration using the following equation.

$$\%RSD = \frac{SD}{\bar{x}} \times 100 \qquad \text{EQ. D.2}$$

where SD = standard deviation.

Standard deviation is calculated using the following equation:

$$SD = \sqrt{\sum_{i=1}^{N} \frac{(x_i - \bar{x})^2}{N - 1}} \qquad \text{EQ. D.3}$$

where: x_i = individual calibration factor (per compound).

$\bar{x}$ = mean of three initial calibration factors (per compound).

N = number of calibration standards.

Equation D.4 is the general formula for the mean of a set of values.

$$\bar{X} = \sum_{i=1}^{N} \frac{X_i}{N} \qquad \text{EQ. D.4}$$

where: $\bar{X}$ = mean of values.

X_i = value.

N = number of values.

8.4.4 Calculate the RRT for each target compound using the following equation:

$$RRT = \frac{RT_{component}}{RT_{SMC}} \qquad \text{EQ. D.5}$$

8.4.5 Calculate the mean RRT and RT for each target compound by using equation D.4.

8.5 Technical Acceptance Criteria

8.5.1 The %RSD of the calibration factor for each target compound and the SMC in the initial calibration must be less than or equal to 25.0 percent, except for DDT, endrin, and methoxychlor which must be less than or equal to 30.0 percent.

8.5.2 The retention time of the SMC in the standards must be within ± 1.0 percent of the mean SMC retention time calculated from the initial calibration standards.

8.5.3 The peak resolution between endosulfan I and a-chlorodane shall be evaluated in the low level initial calibration standard before proceeding with sample analyses (see paragraph 11).

8.5.4 Endrin/DDT breakdown. There is no specific calculation for endrin or DDT breakdown required for this method. Breakdown will occur as the injector becomes contaminated; in such a case, the percent recovery will change in the PVS standard when they are analyzed.

8.5.5 The chromatographic peak response for all target compounds in the low concentration standard must be greater than 10 percent of full-scale deflection.

8.6 Corrective Action

8.6.1 If the %RSD for any compound in the initial calibration is greater than 25.0 percent, except for DDT, endrin, and methoxychlor which may be up to 30.0 percent, the instrument has not demonstrated adequate linearity to be used for this method. Corrective action shall be taken and documented.

8.6.2 If the peak resolution criterion is not met, the Laboratory shall perform corrective action and demonstrate adequate resolution before samples can be analyzed.

8.6.3 If the SMC RT is not within ± 1.0 percent of the mean SMC retention time calculated from the three initial calibration standards, the Laboratory shall perform corrective action which may include a new initial calibration. DO NOT proceed with sample analysis until the RTS is within ± 1.0 percent.

8.6.4 If the peak response for any target compound in the low concentration standard is not greater than 10 percent of full-scale deflection, the Laboratory shall perform corrective action and make appropriate adjustments before sample analyses are started, to ensure that all target compound peak responses in the low concentration standard are greater than 10 percent of full-scale deflection.

8.6.5 Corrective action may include optimizing detector linearity by cleaning the ECD detector using high temperature (350°C) overnight or by hydrogen flow for two hours to reduce breakdown. Actions also may include replacing the GC injector liner, column, or the pre-column, removing 0.5 - 1 m of the analytical column, or replacing the standards.

8.6.6 All initial calibration technical acceptance criteria shall be met before any samples or required blanks are analyzed. Any samples or required blanks analyzed when the initial calibration criteria

have not been met shall require reanalysis at no additional cost to the Agency.

8.7 Documentation

Initial calibration results are reported on Forms QIVA-PEST, QIVB-PEST, and QVI-PEST. Reporting requirements are listed in Exhibit B.

9 Calibration of the GC System - Calibration Check

9.1 Summary

A check of the initial calibration curve shall be performed at the beginning of every 24-hour analytical sequence that includes field sample analyses. This check of the initial calibration shall be performed using the mid level standard and shall contain all target compounds and the SMC. The percent difference (%D) between the calibration factor in the calibration check standard and the average calibration factor from the initial calibration is calculated for each target compound and the SMC, and must meet the technical acceptance criteria given in paragraph 9.5. The SMC RTS and column resolution must also meet technical acceptance criteria as stated in paragraph 9.5 and paragraph 11, respectively. Only after all these criteria are met can sample analysis begin.

NOTE: Compound identification and quantitation shall be performed based on calibration factors and compound RT and RRT windows established during the initial calibration.

9.2 Frequency

9.2.1 Each GC used for analysis shall be checked to verify the initial calibration for each 24-hour period of operation. This procedure is to ensure that the instrument continues to meet the instrument sensitivity and linearity requirements of this method.

9.2.2 An analytical sequence is a contractually defined sequence of GC analyses which consists of an initial three-point calibration or valid calibration check, field samples, LCS, method and instrument blanks, PVS, and other QC samples run within a 24-hour period (see paragraph 18).

9.2.3 The analytical sequence shall be concluded with an acceptable analysis of an instrument blank and a PVS standard (see paragraph 10).

9.2.4 Samples shall be analyzed only after meeting the technical acceptance criteria for the initial calibration or a valid calibration check standard.

9.3 Procedure

9.3.1 The GC system shall be set up per the requirements of paragraph 7.

9.3.2 Prepare the calibration check standard solution containing the SMC and all target compounds using the procedure listed in paragraph 6.4.

9.3.3 The calibration check standard solution shall be equilibrated to ambient temperature before injection (approximately one hour).

9.3.4 Inject between 1 and 5 µL of the mid level calibration standard. The same injection volume shall be used for all calibrations and field/QC sample analyses.

9.4 Calculations

9.4.1 Calculate the calibration factor (ratio of the total peak area or peak height to the mass injected) for each target compound and the SMC in the calibration check standard mixture using the following equation.

$$\textit{Calibration Factor} = \frac{\textit{Total Area of Peak or Peak Height}}{\textit{Mass injected (ng)}} \qquad \text{EQ. D.6}$$

9.4.2 Calculate the %D between the calibration factors from the calibration checks and the mean calibration factors from the initial calibration using the following equation.

$$\%D = \frac{\bar{x} - x_c}{\bar{x}} \times 100 \qquad \text{EQ. D.7}$$

where:

$\bar{x}$ = mean of three initial calibration factors (per compound).

x_c = calibration factor from current calibration check (per compound).

9.5 Technical Acceptance Criteria

9.5.1 The %D between the calibration factors for each target compound and SMC in the calibration check standard and the mean calibration factor for that compound in the initial calibration must be within

± 35.0 percent, except for DDT, endrin, and methoxychlor which must be within ± 40.0 percent.

9.5.2 All target compound absolute and relative retention times must be within the windows established during the initial calibration. Report calibration check RT and RRT data on Form QI-PEST (see Exhibit B).

9.5.3 The retention time of the SMC in the calibration checks must be within ± 1.0 percent of the mean SMC retention time calculated from the initial calibration standards (mean RT of all the initial calibration standards).

9.5.4 The peak resolution between endosulfan I and a-chlordane shall be evaluated before proceeding with sample analyses (see paragraph 11).

9.5.5 Endrin/DDT breakdown. There is no specific calculation for endrin or DDT breakdown required for this method. Breakdown will occur as the injector becomes contaminated; in such a case, the calibration factor percent difference will exceed the limits for a valid calibration check.

9.6 Corrective Action

9.6.1 If the %D for any target compound or the SMC is not within ± 35.0 percent, except for DDT, endrin, and methoxychlor which must be within ± 40.0 percent, reanalyze the calibration check. If upon reanalysis any compound is still outside the criterion, a new initial calibration shall be performed before samples can be analyzed. The instrument must be recalibrated as described in paragraph 8.

9.6.2 If the RT or RRT for any compound is not within the RT and RRT windows established during the initial calibration, reanalyze the calibration check standard. If upon reanalysis a compound is still outside the window, a new initial calibration must be performed before samples can be analyzed. The instrument must be recalibrated as described in paragraph 8.

9.6.3 If the SMC RTS is not within ± 1.0 percent of the mean SMC RT calculated from the initial calibration, the calibration check standard shall be immediately reanalyzed. If the RTS is still outside the criterion upon reanalysis, corrective action shall be performed which may include a new initial calibration. DO NOT proceed with sample analyses until the SMC RTS is within ± 1.0 percent.

9.6.4 If the peak resolution criterion is not met, the Laboratory shall perform corrective action and demonstrate adequate resolution before samples can be analyzed.

9.6.5 All calibration check technical acceptance criteria shall be met before any samples or required blanks are analyzed. Any samples or required blanks analyzed when the calibration check criteria have not been met shall require reanalysis at no additional cost to the Agency.

9.7 Documentation

Calibration check results are reported on Forms QI-PEST, QV-PEST, and QVI-PEST. Reporting requirements are listed in Exhibit B.

10 Calibration of the GC System - Performance Verification Standard (PVS)

10.1 Summary

A performance verification standard shall be analyzed at the end of every 24-hour analytical sequence. The analysis of the PVS mixture shall be started within 24 hours after the injection of the first initial calibration standard or the instrument blank analyzed before a valid calibration check. The PVS is two times the concentration of the low level standard from the initial calibration (see paragraph 6.3.4).

10.2 Frequency

An acceptable PVS must be analyzed at the conclusion of the analytical sequence. The PVS mixture shall be started within 24 hours after the injection of the first initial calibration standard or the instrument blank analyzed before a valid calibration check. If a successful PVS analysis is not obtained at the conclusion of the analytical sequence, all samples analyzed since the last successful PVS, initial calibration, or valid calibration check shall be reinjected and reanalyzed in a valid analytical sequence at no additional expense to the Agency. The Laboratory is encouraged to run additional PVS analyses during an analytical sequence to minimize unpaid reanalyses. If acceptable PVSs are analyzed during an analytical sequence, the Laboratory may continue to collect data under the current calibration until the conclusion of the current 24-hour sequence. If at any time an unsuccessful PVS analysis is made, the Laboratory shall stop sample analysis and immediately reanalyze the PVS. Up to two injections of the PVS mixture may be used to satisfy the criteria. If on reanalysis the PVS is still outside QC criteria, the Laboratory shall take corrective action and recalibrate the GC (run a new initial calibration) prior to reinitiating sample analyses. Recalibration will begin a new analytical sequence.

10.3 Procedure

10.3.1 The PVS solution is two times the concentration of the low level standard mixture from the initial calibration (see paragraph 6.3.4).

10.3.2 Analyze the PVS solution by using the same GC conditions to be used for the field and QC samples and blanks.

10.3.3 The same injection volume shall be used for all field and QC samples and standards including the PVS solution.

10.3.4 The recovery of each compound and the SMC in the PVS are quantitated using the mean calibration factor, the mid point, or by using a K curve established during the initial calibration. (NOTE: Only one method of quantitation shall be used for analyses within a given analytical sequence and for a given Batch of samples).

10.4 Calculations

The amount of PVS compounds and the SMC recovered shall be calculated using the following equations.

$$Amount\ Observed = \frac{A_x}{CF_m} \qquad \text{EQ. D.8}$$

where: A_x = area or peak height of the PVS compound or SMC.

CF_m = calibration factor established by one of three techniques during the initial calibration.

$$Amount\ Recovered = \frac{Amount\ Observed\ (ng)}{Amount\ Added\ (ng)} \times 100 \qquad \text{EQ. D.9}$$

10.5 Technical Acceptance Criteria

10.5.1 All PVS target compounds must have a calculated recovery of 75-125 percent in order to report data without flags.

10.5.2 If recovery of a PVS compound is not within 75-125 percent but still within an expanded recovery window of 50-150 percent, the associated sample analyses results shall be flagged (see paragraph 10.6).

10.5.3 The SMC recovery criterion of 50-150 percent is advisory only. Reanalysis of the PVS is not performed if the SMC recovery is outside the advisory recovery limits. The SMC recovery in the PVS mixture must, however, be greater than or equal to 20 percent and less than or equal to 200 percent (see paragraph 10.6).

10.5.4 All target compound absolute and relative retention times must be within the windows established during the initial calibration. Report PVS RT and RRT data on Form QI-PEST (see Exhibit B).

10.5.5 The SMC RT in the PVS must be within ± 1.0 percent of the SMC mean RT calculated from the initial calibration.

10.5.6 The peak resolution between endosulfan I and a-chlordane shall be evaluated in the PVS before proceeding with sample analyses (see paragraph 11).

10.5.7 Endrin/DDT breakdown. There is no specific calculation for endrin or DDT breakdown required for this method. Breakdown will occur as the injector becomes contaminated; in such a case, the percent recovery will exceed the limits for a valid PVS.

10.6 Corrective Action

10.6.1 If recovery of a compound is not within 75-125 percent but still within an expanded recovery window of 50-150 percent, flag the outlier compound "P" in all associated field sample results generated since the last valid PVS, initial calibration, or valid calibration check.

10.6.2 If any PVS compound is outside the expanded recovery range, the PVS shall be reanalyzed immediately. If, on reanalysis, any compound is still outside the expanded criteria, stop sample analyses, perform corrective action, run a new initial calibration, and reanalyze all samples run after the last valid PVS, initial calibration, or valid calibration check, before proceeding with sample analyses.

10.6.3 If the RT or RRT for any compound is not within the RT and RRT windows established during the initial calibration, reanalyze the PVS. If upon reanalysis a compound is still outside the windows, a new initial calibration must be performed before samples can be analyzed. The instrument must be recalibrated as described in paragraph 8. Reanalyze all samples run after the last valid PVS, initial calibration, or valid calibration check standard before proceeding with sample analyses.

10.6.4 If the SMC RTS criterion is not met for a PVS, sample analyses shall be stopped and the PVS immediately reanalyzed. If the RTS is still outside the criterion upon reanalysis, corrective action shall be performed which may include a new initial calibration. DO NOT continue with sample analyses until the RTS is within ± 1.0 percent. Reanalyze all samples that were run between the noncompliant PVS and the last valid PVS, initial calibration, or valid calibration check standard before proceeding with sample analyses.

10.6.5 If a PVS SMC recovery is less than 20 percent, greater than 200 percent, or if peak interferences are present, stop sample analyses, perform corrective action, and immediately reanalyze the PVS. If the SMC is still out on reanalysis, perform corrective action and start a new analytical sequence. All samples analyzed since the last valid PVS, initial calibration, or valid calibration check shall be reanalyzed within a valid analytical sequence.

10.6.6 If the peak resolution criterion is not met, the Laboratory shall perform corrective action and demonstrate adequate resolution before samples can be analyzed (see paragraph 11).

10.6.7 If all PVS criteria cannot be met after having taken corrective action, reanalyze (do not re-extract) the associated field samples in another valid analytical sequence. If on reanalyses all QC sample criteria are met and the PVS criteria still cannot be met, then submit all sample data from both sequences. The Laboratory shall describe in the Batch narrative the problems associated with the PVS and how the field sample matrix may have affected the PVS analyses. If the Laboratory can demonstrate that the problems are due to matrix effects, then both sequences are billable.

10.6.8 If a PVS reanalysis is required because of a non-compliant initial PVS analysis, the PVS reanalysis must be started within 26 hours after the start of the current analytical sequence.

10.6.9 Because reanalysis, at no additional cost to the Agency, is required if PVS technical acceptance criteria are not met, more frequent analysis of the PVS is recommended, especially when highly contaminated or complex samples are analyzed.

10.7 Documentation

Results of PVS analyses are reported on Forms QI-PEST, QIII-PEST, and QVI-PEST. Reporting requirements are listed in Exhibit B.

11 System Performance - GC Resolution

11.1 Summary

Peak resolution between endosulfan I and a-chlordane shall be measured to establish that there is sufficient chromatographic resolution for accurate compound identification and quantitations. When minimum peak resolution cannot be met, identification and quantitation is adversely affected due to the difficulty in establishing the baseline.

11.2 Frequency

11.2.1 Initial calibration - The peak resolution between endosulfan I and a-chlordane in the low initial calibration standard shall be evaluated before proceeding with sample analyses.

11.2.2 Calibration check standard - The peak resolution between endosulfan I and a-chlordane in the calibration check standard shall be evaluated before proceeding with sample analyses.

11.2.3 Performance verification standard - The peak resolution between endosulfan I and a-chlordane shall be evaluated for each PVS that is analyzed in a valid analytical sequence.

11.3 Calculations

Determine resolution by calculating the percent valley between peak pairs using the following equation (see figure 1).

$$\textit{Percent Valley} = \frac{\textit{Height of the valley between endosulfan I and a-chlordane}}{\textit{Peak height of smaller peak being resolved}} \times 100 \quad \text{EQ. D.10}$$

11.4 Technical Acceptance Criteria

11.4.1 Initial calibration - The percent valley must be less than or equal to 75 percent between endosulfan I and a-chlordane in the analysis of the low standard of the initial calibration.

11.4.2 Calibration check standard - The percent valley must be less than or equal to 75 percent between endosulfan I and a-chlordane in the analysis of the calibration check standard.

11.4.3 Performance verification standard - The percent valley must be less than or equal to 75 percent between endosulfan I and a-chlordane in the analysis of the PVS.

11.5 Corrective Action

11.5.1 If the peak resolution for the two compounds indicated in paragraph 11.1 exceeds the 75 percent valley criterion in the low level standard analyzed during the initial calibration, corrective action shall be taken, and a new initial calibration shall be performed and documented before proceeding with sample analyses.

11.5.2 If the peak resolution for the two compounds indicated in paragraph 11.1 exceeds the 75 percent valley criterion in the calibration check standard, corrective action shall be performed. A valid calbration check must be demonstrated or a new initial calibration shall be performed and documented before proceeding with sample analyses.

11.5.3 If the percent valley for the PVS does not meet the technical acceptance criteria indicated in paragraph 11.4, the PVS shall be immediately reanalyzed. If after reanalysis the PVS percent resolution is still outside criterion, corrective action shall be performed and a valid calibration check standard run or new initial calibration performed. Reanalyze all samples run after the last valid PVS, initial calibration, or valid calibration check standard before proceeding with sample analyses.

11.5.4 A high percent valley could indicate injector contamination or column degradation; therefore, injection port and/or column maintenance may be required. Maintenance may include replacement of the injector liner and/or removing 0.5 - 1 m of the column. If these measures do not work, column replacement should be considered.

11.6 Documentation

Percent resolution results are reported on Forms QIII-PEST, QIVA-PEST, and QV-PEST. Reporting requirements are listed in Exhibit B.

SECTION IV

SAMPLE ANALYSIS AND COMPOUND IDENTIFICATION AND QUANTITATION

12 Summary

12.1 This method is designed for use in the rapid analysis of water, soil/solid, oil, and wipe samples for the target compounds listed in Exhibit C. If upon inspection of a sample the Contractor suspects that the sample is not amenable to this method, contact the Regional TPO or the CLASS contractor for instructions. For Superfund emergency removal actions, contact the Regional TPO or the Headquarters APO for instructions. If, for emergency response actions, the TPO or APO are not available, contact the Regional On-Scene Coordinator (OSC) for instructions. The Laboratory must remember that it shall follow the requirements in this SOW without deviation.

12.2 Before samples or required blanks can be analyzed, the instrument must meet initial calibration or calibration check and column resolution technical acceptance criteria. All sample extracts, required blanks, LCS, PVS, and calibration standards shall be analyzed under the same instrumental conditions and shall be allowed to warm to ambient temperature (approximately one hour) before preparation and analysis.

12.3 The laboratory shall perform sample extraction and cleanup of water samples utilizing either solvent (paragraph 14) or solid phase (paragraph 15) extraction and cleanup. The laboratory must meet all QA/QC requirements as stated under this contract using either of these extraction/cleanup techniques. The solvent extraction procedures are recommended for the cleanup and extraction of all samples; however, pesticides SPE procedures for waters may be used if equivalency to the solvent extraction procedures can be demonstrated by the Laboratory. Solvent extraction and cleanup procedures shall be used for all non-aqueous samples.

12.4 Blank samples, such as trip blanks and field blanks, supplied by the Region and included with a batch of field samples shall be prepared, analyzed, and reported as water samples. Occasionally, a water QC sample (e.g., field and trip blanks) will be included with a batch of soil samples. If the laboratory is not certain whether a water sample associated with a batch of soil samples is a QC sample, contact the Regional TPO or the CLASS contractor.

NOTE: If water blanks provided by the Region, such as trip and field blanks are included in a batch of soil samples, the Laboratory is not required to prepare and analyze an associated water method blank or a water LCS.

12.5 If unusual or high concentration samples are received, see Exhibit D, Appendix B for general guidance on screening and sample preparation.

13 Phase Separation

Multi-phase samples shall be phase-separated into their individual phases. The phase separation techniques employed will vary according to the types of samples received. Since it is impossible to know the number and types of phases that will be present in a sample, the choice of phase separation techniques is left to the professional judgement of the analyst. Various techniques can be employed to separate the phases. These include pipetting off liquid phases (decanting should not be done), centrifuging to remove suspended solids, and use of spatulas to remove solids (wooden tongue depressors work well). Whenever possible, phase separation operations should be done with disposable glassware. The phases should be separated into glass containers with teflon-lined screw caps. This allows for storage and handling of the waste in a safe manner.

13.1 Samples received containing multiple phase such as water, oil, and soil/solid in the same sample jar shall be phase separated into individual phases.

13.2 Each individual phase is taken through the procedure as a subsample. Report analytical results for each sample phase. Note: Each multi-phase sample shall be identified using the EPA sample number convention for multi-phase samples as specified in Exhibit B.

13.3 Do not analyze any phase that represents less than 10 percent of the total sample volume.

13.4 In the following procedures, where applicable, references to "samples" explicitly mean "single phase units."

14 Solvent Extraction and Cleanup

14.1 Sample Preparation and Extraction - Water Samples

A 100 mL aqueous sample is serially extracted using two 10 mL portions of hexane. Extractions are performed in 125 mL Erlenmeyer flasks with a magnetic stirring bar. One gram of NaCl is added to the aqueous sample 3 minutes after the first hexane extracting solvent is added. Extracts are combined, filtered, and dried through powdered anhydrous sodium sulfate, and concentrated to a 1 mL volume using the nitrogen blowdown procedure. Non-pesticides extractables are removed from the extract with a florisil column clean-up procedure. Final extract volume is 1 mL.

14.1.1 Measure 100 mL of sample into a 125 mL Erlenmeyer flask.

14.1.2 Spike the sample with 10 μL of the SMC (5.0 ug/mL).

14.1.3 Add teflon stirring bar.

14.1.4 Add 10 mL of hexane.

14.1.5 Place the sample on magnetic stirring plate and stir for three minutes. The stirring rate should be sufficient to mix hexane throughout the sample.

14.1.6 Add 1 gram of NaCl to sample during stirring and stir for an additional 3 minutes.

14.1.7 Remove stir bar and allow aqueous and hexane layers to separate.

14.1.8 Transfer the hexane layer by pasteur pipet to a 25 mL concentrator tube.

14.1.9 Repeat steps 14.1.4 - 14.1.5 and 14.1.7 - 14.1.8. Combine extracts. Discard extracted aqueous sample.

14.1.10 Prepare a drying column by plugging the bottom of a funnel with glass wool and adding approximately 15 grams of powdered anhydrous sodium sulfate. Pour extract through funnel and collect in a 25 mL graduated concentrator tube.Rinse the extract container with minimal volumes of hexane and pour through the funnel. Rinse sodium sulfate twice with minimal volumes of hexane.

14.1.11 Concentrate extract to approximately 1 mL using the nitrogen-blowdown procedure in a 30°C water bath. To minimize analyte loss due to volatility occasionally rinse sides of concentrator tube with hexane during the blowdown procedure. Do not let extract go dry during concentration.

14.1.12 Proceed to extract clean-up step (paragraph 14.3).

14.2 Sample Preparation and Extraction - Soil/Solid Samples

A 5 gram sample of soil is mixed with powdered anhydrous sodium sulfate and is serially extracted with a 20 mL and a 10 mL portion of hexane/acetone (50:50) using an ultrasonic probe. Extracts are combined, filtered, and dried through powdered anhydrous sodium sulfate, and concentrated with solvent exchange into hexane to a 1 mL volume using the nitrogen blowdown procedure. Non-pesticides extractables are removed from the extract with a florisil column clean-up procedure. Final extract volume is 1 mL.

14.2.1 Decant and discard any water layer on a soil/solid sample. Mix samples thoroughly, especially composited samples. Discard any foreign objects such as sticks, leaves, and rocks.

14.2.2 Weigh approximately 6 grams of a representative sample to the nearest 0.1 g into a 150 mL beaker.

14.2.3 To the weighed sample add a sufficient amount of powdered anhydrous sodium sulfate to prepare a free flowing mass upon mixing. Mix well.

14.2.4 Spike the sample with 10 µL of the SMC (5.0 ug/mL), mix further.

14.2.5 Add 20 mL of hexane/acetone (50:50).

14.2.6 Sonicate at microtip maximum power; cool the sample during sonication. The sonicator must be set for 50 percent pulse action. Sonicate for 3 minutes. The power output may have to be adjusted to ensure that the sample extract does not splash excessively; any significant loss of sample during sonication is not acceptable. Rinse the sonicator tip after each sample extraction with 1 mL of hexane/acetone (50:50). This rinse liquid shall be combined with the sample extract.

14.2.7 Remove and collect solvent layer in a 40 mL centrifuge tube.

14.2.8 Add 10 mL hexane/acetone (50:50) and repeat steps 14.2.6 and 14.2.7.

14.2.9 Combine extracts and filter by gravity or vacuum filtration. Complete filtration by transferring entire sample contents to funnel and rinse with an additional 10 mL hexane/acetone (50:50).

14.2.9.1 For gravity filtration, prepare a filtration/drying bed with Whatman #42 filter paper filled with approximately 15 grams of powdered anhydrous sodium sulfate in a 6 cm powder funnel. Rinse sodium sulfate and filterpaper with hexane/acetone (50:50) and discard rinsate. With the filter and sodium sulfate wetted, decant combined extracts through the packed funnel and collect in a 40 mL centrifuge tube. Rinse the extract container with minimal volumes of hexane/acetone (50:50) and pour through the funnel. Rinse filter/sodium sulfate with 10 mL of hexane/acetone (50:50).

14.2.9.2 For vacuum filtration use Whatman #42 filter paper in a Buchner funnel. Pre-wet the paper with the hexane/acetone (50:50) solvent and discard rinsate. Transfer combined extracts into funnel, apply vacuum, and collect filtrate. Rinse filter with an 10 mL of hexane/acetone (50:50). Pour filtered extract through a powder funnel plugged with glass wool and filled with powdered anhydrous sodium sulfate and collect in a 40 mL centrifuge tube. Rinse the extract container with minimal volumes of hexane/acetone (50:50) and pour through the funnel. Rinse sodium sulfate with an additional 10 mL hexane/acetone (50:50).

14.2.10 Concentrate extract to approximately 25 mL using the nitrogen-blowdown procedure in a 30°C water bath. Transfer extract concentrate to a 25 mL concentrator tube and concentrate further to approximately 0.5 mL. Add 5 mL of hexane to concentrator tube and mix vigorously. Reconcentrate to approximately 1 mL. To minimize analyte loss due to volatility, occasionally rinse sides of centrifuge and concentrator tubes with hexane during the blowdown procedure. Do not allow extract to go dry during concentration.

14.2.11 Proceed to extract clean-up step (paragraph 14.3).

14.3 Florisil Cartridge Procedure

14.3.1 Attach the Vac Elute vacuum manifold to a water aspirator or vacuum pump with a trap installed between the manifold on the vacuum source. Adjust the vacuum pressure in the manifold to between 5 and 10 pounds of vacuum.

14.3.2 Place one Florisil cartridge into the vacuum manifold for each sample extract.

14.3.3 Prior to cleanup of samples, the cartridge must be washed with hexane/acetone (90:10). This is accomplished by placing the cartridge in the vacuum manifold pulling a vacuum and passing 5 mL of the hexane/acetone (90:10) solution through the cartridge. While the cartridges are being washed, adjust the vacuum applied to each cartridge so that it is approximately equal. **DO NOT ALLOW THE CARTRIDGES TO GO DRY AFTER THEY HAVE BEEN WASHED.**

14.3.4 After the cartridges in the manifold are washed the vacuum is released and a rack containing labeled 10 mL volumetric flasks is placed inside the manifold. Care must be taken to

ensure that the solvent guide from each cartridge is placed inside of the appropriate volumetric flask as the manifold top is replaced and that the sorbent beds do not go dry after they have been conditioned.

14.3.5 After the volumetric flasks are in place, vacuum to the manifold is restored and extracts from each field and QC sample solution is transferred to the top frit of the appropriate Florisil cartridge.

14.3.6 The pesticides in the extract concentrates are then eluted through the column with 9 mL of hexane/acetone (90:10) and collected into the 10 mL volumetric flasks held in the rack inside of the vacuum manifold.

14.3.7 Transfer the eluate in each volumetric flask to a clean centrifuge tube or 10 mL vial. Use two additional 1 mL hexane/acetone (90:10) rinses of the flask to ensure quantitative transfer of the cartridge eluate.

14.3.8 Reduce the total volume in the volumetric tube to 1 mL by using either nitrogen blow-down or micro-Snyder column. This final volume is suitable for extract analyte concentrations of 10 ng/mL to 1000 ng/mL. This is equivalent to sample compound concentrations of 0.1 to 10 µg/L for water samples, 1.7 to 167 µg/kg for soil/solid samples, and 100 to 10,000 µg/kg for oil samples.

14.3.9 If crystals of sulfur are evident or the presence of sulfur is suspected, proceed to paragraph 14.4. Sample analyses showing the presence of sulfur are not acceptable and must be reanalyzed after sulfur removal.

14.3.10 If sulfur is not expected to be a problem, transfer the 1.0 mL of sample to a GC vial and label the vial. The extract is ready for GC/ECD analysis; proceed to paragraph 18. Store the extracts at 4°C (± 2°C) in the dark until analyses are performed.

14.4 Sulfur Removal

14.4.1 Bright (unoxidized) granular copper is used to remove sulfur contamination. Add one to three granules of copper to each hexane extract in a clean vial. Tighten the top on the vial and shake for 30 seconds. Filter or centrifuge and then decant the solution to remove all solid precipitates. If copper appears bright, go to paragraph 18. If copper changes color, repeat sulfur removal as necessary.

14.4.2 If only a partial set of the samples in the Batch require sulfur cleanup, an additional reagent blank of hexane spiked with the appropriate amount of the SMC solution and cleaned with the copper is required.

14.4.3 Proceed to paragraph 18 for GC/ECD analysis.

15 Solid Phase Extraction and Cleanup of Water Samples

Solid Phase Extraction using nonpolar C_8 (or equivalent) or C_{18} disks may be used to extract water samples (an alternative disk phase may be used if the new phase can be demonstrated to meet the QA/QC requirements of this method). An additional filter disk is required when water samples contain particulates. Upon opening a package of disks, they shall be used immediately or stored in a desiccator (over Drierite, or equivalent). **For reproducible extraction efficiencies, all directions given below shall be followed as closely as possible.** NOTE: The laboratory shall not use SPE for non-aqueous samples.

15.1 Sample Filtration

All water samples extracted using SPE shall be filtered. The filtration step may be combined with the extraction by placing a filter disk designed to fit inside the neck of the sample reservoir and proceeding with the water sample cleanup and extraction as specified in paragraphs 15.2 - 15.5.

15.2 Sample Preparation - Water Samples

NOTE: The pesticides water CRQLs are the same as the solvent extracted sample CRQLs as stated in Exhibit C.

15.2.1 Pour 100 mL of water sample into a clean Erlenmeyer flask, fleaker beaker, separatory funnel, or any other suitable mixing chamber.

15.2.2 Adjust the pH of the sample to 5.0 - 7.0 using (0.5 N) sodium hydroxide or (0.5 N) sulfuric acid.

15.2.3 Spike the sample with 10 µL of the SMC (5.0 µg/mL).

15.2.4 Add 5 mL of methanol to the water sample.

15.2.5 Shake sample vigorously to mix thoroughly.

15.2.6 Proceed with sample cleanup and extraction utilizing SPE disk procedure (paragraphs 15.3 - 15.7).

15.3 Disk Set-up and Conditioning

15.3.1 Place the disk onto the frit on the vacuum head, place the reservoir on top of the head and clip together.

15.3.2 When filtration is required, a filtration disk or 500 mg of Celite will be placed on top of the extraction disk.

15.3.3 Turn vacuum pump on and set pump vacuum to 10 inches of mercury. Do not exceed the manufacturer's recommendation for manifold vacuum. Flow rates can be controlled by opening and closing vacuum manifold valves or pinch clamps.

15.3.4 Wash each disk with four 5 mL aliquots of hexane/acetone (90:10). **SLOWLY** open vacuum valves to allow the hexane/acetone (90:10) to pass through the disk after each wash.

15.3.5 Wash each disk with four 5 mL aliquots of methanol (MeOH). Let disks drain after each wash. Do not allow the disks to drain dry between washes.

15.3.6 Wash the disks with two 5 mL aliquots of methanol/water (5:100). Allow the first 5 mL portion to wash through; however, do not allow the disk to drain dry. Next wash the last 5 mL portion through, keeping the disk wet. Each disk must remain moist until the entire sample volume is extracted. **DURING CONDITIONING, DO NOT ALLOW DISKS TO DRY. THIS STEP IS CRITICAL FOR GOOD RECOVERIES.**

15.4 Compound Extraction Using Disks

15.4.1 Swirl the sample (from paragraph 15.2) for 20 seconds and carefully decant the sample into the sample reservoir.

15.4.2 Open manifold valves to allow samples to pass through the disks at approximately 3 - 8 mL/min. The flow rate must not exceed 10 mL/min. If the flow rate slows because of particulate buildup on the disk or filter, increase the vacuum to maintain 3 - 8 mL/min. flow.

NOTE: It must take at least 10 minutes for the sample to pass through the disk.

15.4.3 Rinse the sample container with 5 - 10 mL of methanol/water (5:100) into the sample reservoir to transfer any remaining compounds.

15.4.4 When the entire sample volume has passed through the disks (approximately 15 minutes), rinse the sample reservoir with an additional 5 - 10 mL methanol/water (5:100) into the disks.

15.4.5 Wash the disks with an additional 5 mL methanol/water (5:100), continue to apply vacuum until the top of the disk is dry. Turn off vacuum.

15.4.6 Wipe the reservoir dry with clean lab tissues (Kimwipes, or equivalent).

15.5 Compound Elution using Disks

15.5.1 Release the vacuum on each filtration device, dispose of the aqueous eluate in the large receiver. Do not unclip the reservoir from the vacuum head.

15.5.2 Place a clean solvent receiver over the drip tip of the vacuum head.

15.5.3 Add 5 mL hexane/acetone (9:1) to each disk. If additional filtration media was used, allow the hexane/acetone to stand in the reservoir for 2 minutes prior to applying vacuum.

15.5.4 Turn vacuum pump on. Adjust pump pressure to 5 inches of mercury.

15.5.5 **SLOWLY** open the manifold valves to allow hexane/acetone to soak into the sorbent bed. **DO NOT ALLOW THE HEXANE/ACETONE TO ELUTE AT THIS TIME.** Close valves and allow disks to soak for 2 minutes.

15.5.6 After 2 minutes, slowly open the manifold valves and collect eluant into the receiver tube. **APPLICATION OF EXCESSIVE VACUUM WILL RESULT IN ANALYTE LOSS.**

15.5.7 Add a second volume of 5 mL hexane/acetone to each disk and elute under vacuum until the disk is dry.

15.5.8 If a water layer is evident in the eluate, remove by the addition of sodium sulfate as follows: (Note: water injected into the GC may strip the analytical column phase and may cause retention time shifts.)

15.5.8.1 Add 5 g Na_2SO_4 to the eluate.

15.5.8.2 Decant the eluate and quantitatively recover the pesticides by adding additional 90:10 hexane/acetone to the Na_2SO_4. Combine this hexane/acetone with the eluate.

15.5.9 Bring the total volume in the receiver tube to 1 mL by concentration.

15.6 Florisil Cartridge Procedure

15.6.1 Attach the Vac Elute vacuum manifold to a water aspirator or vacuum pump with a trap installed between the manifold on the vacuum source. Adjust the vacuum pressure in the manifold to between 5 and 10 pounds of vacuum.

15.6.2 Place one Florisil cartridge into the vacuum manifold for each sample extract.

15.6.3 Prior to cleanup of samples, the cartridge must be washed with hexane/acetone (90:10). This is accomplished by placing the cartridge in the vacuum manifold pulling a vacuum and passing 5 mL of the hexane/acetone solution through the cartridge. While the cartridges are being washed, adjust the vacuum applied to each cartridge so that it is approximately equal. **DO NOT ALLOW THE CARTRIDGES TO GO DRY AFTER THEY HAVE BEEN WASHED.**

15.6.4 After the cartridges in the manifold are washed the vacuum is released and a rack containing labeled 10 mL volumetric flasks is placed inside the manifold. Care must be taken to ensure that the solvent guide from each cartridge is placed inside of the appropriate volumetric flask as the manifold top is replaced and that the sorbent beds do not go dry after they have been conditioned.

15.6.5 After the volumetric flasks are in place, vacuum to the manifold is restored and extracts from each field and QC sample solution is transferred to the top frit of the appropriate Florisil cartridge.

15.6.6 The pesticides in the extract concentrates are then eluted through the column with 9 mL of hexane/acetone (90:10) and collected into the 10 mL volumetric flasks held in the rack inside of the vacuum manifold.

15.6.7 Transfer the eluate in each volumetric flask to a clean centrifuge tube or 10 mL vial. Use two additional 1 mL hexane/acetone (90:10) rinses of the flask to ensure quantitative transfer of the cartridge eluate.

15.6.8 Concentrate the solution to a 1.0 mL volume using either nitrogen blow-down or micro-Snyder column. Measure the final volume with a syringe or by transferring the extract to a volumetric flask. This final volume is suitable for extract analyte concentrations of 10 ng/mL to 1000 ng/mL. This is equivalent to sample compound concentrations of 0.1 to 10 µg/L for water samples.

15.6.9 If crystals of sulfur are evident or the presence of sulfur is suspected, proceed to paragraph 15.10. Sample analyses showing the presence of sulfur are not acceptable and must be reanalyzed after sulfur removal.

15.6.10 If sulfur is not expected to be a problem, transfer the 1.0 mL of sample to a GC vial and label the vial. The extract is ready for GC/ECD analysis; proceed to paragraph 18. Store the extracts at 4°C (± 2°C) in the dark until analyses are performed.

15.7 Sulfur Removal

15.7.1 Add one to three granules of bright (unoxidized) granular copper to each extract solution in a clean vial. Tighten the top on the vial and shake for 30 seconds. Filter or centrifuge and then decant the solution to remove all solid precipitates. Analyze the solution (paragraph 18) if the copper appears shiny. If the copper changes color, repeat the process as necessary until it remains shining.

15.7.2 If only a partial set of the samples in the Batch require sulfur cleanup, an additional reagent blank of hexane spiked with the appropriate amount of the SMC solution and cleaned with the copper is required.

15.7.3 Proceed to paragraph 18 for GC/ECD analysis.

16 Sample Preparation and Extraction - Oil Samples

NOTE: The pesticides target compound CRQL for oil samples is 100 µg/kg.

16.1 Add 1.0 g of sample to a 10 mL volumetric flask.

16.2 Add 1.0 mL of SMC (0.5 µg/mL) to the sample.

16.3 Add hexane to the volumetric flask until reaching the 10 mL meniscus mark.

16.4 Cap with stopper and mix for one minute.

16.5 Pipet exactly 1.0 mL out and proceed with clean-up and final concentration as specified in the SOW pesticides paragraphs 14.3 - 14.4.

17 Sample Preparation and Extraction - Wipe Samples

A wipe sample containing pesticides is serially extracted with two portions of hexane using an ultrasonic probe. Extracts are combined, filtered, and dried through powdered anhydrous sodium sulfate, and concentrated to a 1 mL volume using the nitrogen blowdown procedure.

NOTE: The target compound CRQLs for wipe samples will be specified by the Agency.

17.1 Pour off any free solvent from the sample jar into a clean Erlenmeyer flask of appropriate size.

17.2 Spike the sample with 10 uL of the SMC (5.0 ug/mL).

17.3 Add enough clean hexane to the sample jar to cover the wipe sample.

17.3.1 If the shape of the sample jar is not amenable to sonication, quantitatively transfer the sample to an appropriate container. Rinse the sample jar with 5 -10 mL of hexane and transfer to the new sample container.

17.4 Sonicate at microtip maximum power; cool the sample during sonication. The sonicator must be set for 50 percent pulse action. Sonicate for 3 minutes. The power output may have to be adjusted to ensure that the sample extract does not splash excessively; any significant loss of sample during sonication is not acceptable. Rinse the sonicator tip after each sample extraction with 1 mL of hexane.

17.5 Remove the hexane layer from the sonication and combine it with the hexane in the Erlenmeyer flask.

17.6 Repeat steps 17.3 - 17.5.

17.7 Filter the combined extracts by gravity filtration.

17.7.1 Prepare a filtration/drying bed with Whatman #42 filter paper filled with approximately 15 grams of powdered anhydrous sodium sulfate in a 6 cm powder funnel. Rinse the sodium sulfate and filter paper with hexane and discard rinsate. With the filter and sodium sulfate wetted, decant combined extracts through the packed funnel and collect in a clean concentrator tube. Rinse the Erlenmeyer flask with 10 mL hexane, and transfer rinse solvent to powder funnel. Rinse powder funnel with 10 mL hexane.

17.8 Concentrate extract to approximately 20 mL using the nitrogen blowdown procedure in a 30°C water bath. Transfer extract concentrate to a clean 25 or 30 mL concentrator tube, and rinse concentrator tube (from paragraph 17.7.1) with 5 mL hexane. Transfer the rinse solvent to the 25 or 30 mL concentrator tube, and concentrate further to approximately 1 mL. To minimize analyte loss due to volatility, occasionally rinse sides of centrifuge and concentrator tubes with hexane during the blowdown procedure.

17.9 Proceed to extract clean-up steps (paragraph 14.3).

18 Instrumental Analysis

18.1 Set up the GC system per the requirements in paragraph 7.

18.1.1 Solvent-flush manual injection or automated sample injection is recommended for analysis.

18.1.2 An analytical sequence consists of field sample analyses and all associated standards, blanks, and QC analyses performed within a 24-hour period on one instrument. There are two (2) types of analytical sequences: an initial calibration analytical sequence and a daily calibration check analytical sequence. All samples shall be analyzed within one of these analytical sequences.

18.1.2.1 An initial calibration analytical sequence begins with a three-point calibration, an instrument blank, an LCS, and a method blank. The initial calibration analytical sequence is as follows:

- Initial three-point calibration (analysis of the high standard followed by the mid and low standards);
- Instrument Blank;
- Laboratory Control Sample(s);
- Method Blank(s);
- Field Sample(s);
- Instrument Blank(s); and
- Performance Verification Standard(s).

18.1.2.2 A daily calibration check analytical sequence begins with an instrument blank, valid calibration check standard, a method blank, and an LCS. The daily calibration analytical sequence is as follows:

- Instrument Blank;
- Calibration Check Standard;
- Method Blank(s);
- Laboratory Control Sample(s);

- Field Sample(s);
- Instrument Blank(s); and
- Performance Verification Standard(s).

18.1.3 If all acceptance criteria for these analyses are met, then the Laboratory may proceed with sample analyses.

18.1.4 All analytical sequences conclude with an acceptable instrument blank and PVS analyses. The final PVS shall be started within 24 hours after the injection of the first initial calibration standard or the first instrument blank in the daily calibration sequence.

NOTE: If a PVS reanalysis is required because of a non-compliant initial PVS analysis, the PVS reanalysis must be started within 26 hours after the start of the current analytical sequence.

18.1.5 The method blank and all associated samples shall be analyzed in the same analytical sequence. If samples from a batch are analyzed in more than one analytical sequence, the associated method blank must also be analyzed in the same analytical sequence. If a method blank extract is used up because of multiple analyses, the Laboratory shall substitute an instrument blank in place of a method blank in all subsequent analytical sequences. The Laboratory shall note this in the Batch Narrative and shall use the EPA identification number as described in Exhibit B for this instrument blank.

18.1.6 The LCS shall be analyzed with all associated samples in the same analytical sequence. If samples from a batch are analyzed in more than one analytical sequence, the associated LCS shall be analyzed in the same analytical sequence. If an LCS extract is used up because of multiple analyses, the Laboratory shall dilute the LCS standard mixture (the original stock mix) and use this solution in place of the original LCS sample in all subsequent analytical sequences (see paragraph 27). The Laboratory shall note this in the Batch Narrative and shall use the EPA identification number as described in Exhibit B for this LCS solution.

18.2 Computer reproductions of chromatograms that are attenuated to ensure that all peaks are on scale over a 100-fold range are acceptable. However, post analysis attenuation shall be no greater than a 100-fold range. This is to reduce the potential for RTSs of compounds due to column overload and to ensure that the detector is operating within the

calibration range. If any sample compounds exceed the calibration range, they shall be diluted according to paragraph 19.

18.3 If any saturated non-target compound chromatographic peaks are evident or if any chromatographic peaks overlap more than one RRT and/or RT target compound windows, the Laboratory shall use the "E,N" flags on Form QI-PEST to indicate this situation.

18.3.1 If saturated chromatographic peaks outside target compound RRT and/or RT windows are evident, flag the nearest target compound "E,N" on Form QI-PEST.

18.3.2 If chromatographic peaks overlapping more than one target compound RRT and/or RT windows are evident, flag the corresponding target compounds "E,N" on Form QI-PEST.

18.4 Chromatographic peak response must be greater than 10 percent and less than 100 percent of full-scale deflection to ensure that individual compounds will be visible during data review.

19 Dilutions

19.1 Samples with compounds exceeding the calibration range of the GC must be reported with the "E" data flag as described in Exhibit B. Upon evaluation, the Region may require that the samples be diluted, reextracted, and/or reanalyzed in a valid analytical sequence as additional paid samples. Reextraction and/or reanalysis of diluted samples can only be authorized by the CLASS contractor acting on behalf of the Regional TPO or Headquarters APO. The Laboratory shall perform the dilution analysis as specified below in paragraphs 19.2.2 and 19.2.3.

19.2 The Laboratory may dilute samples prior to initiating sample extraction/analysis. The resulting analysis of those samples must produce chromatograms with at least one target compound present at a concentration greater than that found in the mid point calibration mixture. If no compound is identified in the diluted sample at a concentration that exceeds the mid level standard, then the undiluted sample shall be reextracted and/or reanalyzed at no additional cost to the Agency.

19.2.1 At the request of the Region, sample dilution may be required prior to the initial extraction and analysis. If no target compounds are detected in the diluted sample at the mid point concentration or greater, then the undiluted sample shall be reextracted and/or reanalyzed as an additional paid sample.

19.2.2 Dilutions - Solvent extracted, oil, and wipe samples

19.2.2.1 Dilutions of solvent extracted, oil, and wipe samples shall be made by using an appropriate aliquot of the extract diluted in hexane. After making a dilution, add sufficient SMC solution to bring up to proper concentration (50 ng/mL).

19.2.3 Dilutions - SPE extracted samples

19.2.3.1 Dilutions of water samples shall be made by using an appropriate aliquot of sample diluted to 100 mL with methanol/water (5:100) (see paragraph 15.2). Continue with sample extraction and cleanup as described in paragraph 15.

NOTE: Dilute samples prior to the addition of the SMC.

19.2.4 Sample dilutions shall be analyzed in a valid analytical sequence which includes the associated method blank and LCS.

19.2.5 If sample reextractions and reanalyses are required, the Laboratory shall also reextract and reanalyze an associated method blank and LCS.

20 Identification of Target Compounds

20.1 Retention Time Standard - The SMC shall be the RT marker used for compound identification. The SMC shall also be used to monitor extraction efficiency.

20.1.1 The SMC shall be added to all field and QC samples prior to extraction.

20.1.2 In each analysis, the SMC RT must be within ± 1.0 percent of the mean RT of the SMC established during the initial calibration.

20.2 Compound identification when SMC recovery is greater than or equal to 10 percent and less than or equal to 200 percent.

20.2.1 Target compounds shall be identified on the basis of RRT in all field samples for which the SMC recovery is greater than or equal to 10 percent and less than or equal to 200 percent.

20.2.2 Peaks in sample chromatograms shall be identified as target compounds if their RRT is within ± 0.005 RRT units of the

mean RRT of the standard established during initial calibration.

20.3 Compound identification when SMC recovery is less than 10 percent, greater than 200 percent, or if peak interferences are present.

20.3.1 Target compounds shall be identified on the basis of absolute RT in all field samples for which the SMC recovery is less than 10 percent, greater than 200 percent, or if peak interferences are present.

20.3.2 Peaks in sample chromatograms shall be identified as target compounds if their absolute RT is within ± 1.0 percent of the mean RT established during the initial calibration.

20.3.3 Any compound identified on the basis of absolute RT shall be flagged with the qualifier "T" (See Exhibit B).

20.3.4 If the recovery of the SMC in a field sample is less than 10 percent, greater than 200 percent, or if peak interferences are present for a sample, acceptable recovery of the SMC must be obtained in the associated method blank and LCS (see paragraphs 25 and 27).

20.4 If multiple peaks are within the identification windows (target compound and SMC), the Laboratory shall use professional judgement to properly identify the appropriate peak. The Laboratory should consider the inherent matrix effects of the sample on peak shifting, masking, and overlaps when making identification determinations. The Laboratory should take into consideration the mean RT and RRT from the initial calibration, RT and RRT from the calibration check standard, and the SMC RT from relatively clean samples analyzed before and after the sample in question as a basis for selecting the most appropriate peak. The Laboratory shall describe in the Batch Narrative the rationale used for choosing a particular peak (e.g., chose peak closest to the RT of the peak in calibration check standard) as the target compound or SMC and how the field sample matrix may have affected peak identification.

21 <u>Calculations</u>

21.1 Calculate the RRT of a sample component or a standard using the following equation:

$$RRT = \frac{RT_{component}}{RT_{SMC}} \qquad \text{EQ. D.11}$$

Where:

RRT = relative retention time

$RT_{component}$ = retention time of the target compound

RT_{SMC} = retention time of the SMC

21.2 Calculate the calibration factor for a compound by one of three techniques using data collected during an acceptable initial calibration (paragraph 8). The use of the line segment or "K" curve is suggested. Only one of the quantitation techniques listed below shall be used for quantitating field and QC samples within a Batch or analyzed within a given analytical sequence.

21.2.1 Use the "K" curve (line segments) established during initial calibration. The segments run from the low to the mid point and from the mid to the high point calibration mixtures. (Note: do not extend line segment through the origin if the concentration is below the CRQL).

21.2.2 Use the calibration factors based on the mid point of the initial calibration curve. This option may be used as long as the mid point values are within ± 10 percent of the average of the high and low point values.

21.2.3 Use the mean calibration factor established during the initial calibration.

21.2.4 Quantitation of compounds is based on the calibration factors established during initial calibration.

21.2.5 All calibration requirements, including the initial calibration %RSD and the calibration check %D criteria, must be met regardless of the quantitation technique used.

21.3 Quantitation of Target Compounds

Calculate the concentration in the sample using one of the following equations for external standards. The response can be measured by automated peak height or integrated peak area measurements.

21.3.1 Water

$$Concentration\ (\mu g/L) = \frac{(A_x)\,(v_t)}{(CF_m)\,(V_i)\,(V_s)} \qquad \text{EQ. D.12}$$

where:

A_x = response for the analyte to be measured.

CF_m = calibration factor established by one of three techniques during the initial calibration. (NOTE: Only one method of quantitation may be used for field and QC samples within a Batch or analyzed within a given analytical sequence).

V_t = volume of concentrated extract (µL) (use 1000 µL or a factor of this when dilutions are made).

V_i = volume of extract injected (µL).

V_s = volume of water extracted (mL).

21.3.2 Soil/Solid (Wet-weight basis) and Oil

$$Concentration\ (\mu g/kg) = \frac{(A_x)\,(V_t)}{(CF_m)\,(V_i)\,(W_s)} \qquad \text{EQ. D.13}$$

where:

A_x, CF_m, V_i = same as given in Equation D.12

V_t = volume of concentrated extract (use 1000 µL or a factor of this when dilutions are made).

W_s = weight of sample extracted in g.

NOTE: For oil samples, divide W_s by 10. The factor of 10 for the W_s is necessary because only one-tenth of the hexane extract is processed and analyzed.

21.4 Calculate the SMC amount observed and amount (percent) recovered using equations as described in paragraph 10.4.

21.5 RTS shall be monitored using the SMC (paragraph 20.1). The RTS shall be measured for all analyses.

21.5.1 Calculate the retention time percent difference (RT %D) between the RT of SMC in the field and QC samples or subsequent standards analyzed and the mean SMC RT from the most recent initial calibration analyzed using the following equation.

$$RT\ \%D = \frac{RT_c - RT_s}{RT_c} \times 100 \qquad \text{EQ. D.14}$$

where:

RT %D = retention time percent difference.

RT_s = retention time of the SMC in a field and QC sample or subsequent standard.

RT_c = mean retention time of the SMC from the most recent initial calibration.

22 Technical Acceptance Criteria

22.1 Each sample within a Batch shall be analyzed on a GC system meeting the initial calibration or valid calibration check technical acceptance criteria (paragraphs 8 and 9).

22.2 Each sample within a Batch shall be analyzed after an acceptable method and instrument blank (paragraphs 25 and 26), and after an acceptable LCS (paragraph 27) are analyzed.

22.3 Each sample within a Batch shall be run within a valid initial calibration or daily calibration check analytical sequence that concludes with an acceptable instrument blank (paragraph 26) and an acceptable PVS analysis (paragraph 10).

22.4 Each sample within a Batch shall be analyzed and results reported within the contract required turnaround times.

22.5 Each sample matrix within a Batch shall have an acceptable method blank analyzed during the same analytical sequence.

22.6 The RTS for the SMC RT must be within ± 1.0 percent between any sample in a Batch and the mean RT of the SMC analyzed during the initial calibration. The RTS is not evaluated if the SMC is not recovered or if peak interferences are present.

22.7 The advisory recovery limit for the SMC is 50-150 percent. Reanalyses of field samples are not made if the SMC recovery is outside the advisory recovery limits.

22.8 The SMC recovery must be greater than or equal to 10 percent and less than or equal to 200 percent in order to use RRT for identification purposes. The identification window is ± 0.005 unit of the mean RRT of each target compound from the initial calibration. If the recovery of the SMC is less than 10 percent, greater than 200 percent, or if peak interferences are present (but is adequately recovered in the method

blank), the absolute RT of the compounds shall be used for identification purposes. The identification window is ± 1.0 percent of the mean absolute RT of each target compound from the initial calibration.

23 Corrective Action

23.1 Flag all sample results "S" if the SMC is outside the advisory recovery limits of 50-150 percent.

23.2 Flag all sample results "T" if the absolute RTs are used for identifications.

23.3 An SMC recovery of less than 20 percent in the method blank or LCS associated with a sample Batch is an indication that serious problems may have occurred during the extraction process. Corrective action shall be performed and the unacceptable method blank and/or LCS and all samples associated with the unacceptable method blank and/or LCS shall be reextracted and reanalyzed at no additional expense to the Agency.

23.4 If the SMC retention time shift (RTS) criterion is not met for any field sample, sample analysis shall be stopped and the noncompliant sample rerun. If the RTS criterion is still out upon reanalysis, analyze an instrument blank. If the instrument blank SMC RTS is outside the criterion, perform corrective action which may include a new initial calibration. DO NOT continue with sample analyses until the RTS is within ± 1.0 percent. If the instrument blank SMC RTS meets the criterion, sample analysis may continue. The Laboratory shall report both sets of noncompliant sample data and flag the results "M". Note: The RTS is not evaluated if the SMC is not recovered or if peak interferences are present.

23.5 All target compound concentrations which exceed the upper limit of the initial calibration range will be flagged "E" (see Exhibit B).

NOTE: Unless otherwise stated in Exhibit D, all sample data from the initial analysis shall be reported to the appropriate Region. Samples not meeting any one of the contract technical acceptance criteria and not requiring automatic reextraction and/or reanalysis shall be flagged by the Laboratory. The Region will evaluate the noncompliant samples and may specify that these be reanalyzed as additional paid samples.

24 Documentation

Sample results shall be reported on Forms QI-PEST and QVI-PEST. Reporting requirements are listed in Exhibit B.

SECTION V

SAMPLE QUALITY CONTROL PROCEDURES AND REQUIREMENTS

25 Method Blank Analysis

25.1 Summary - A method blank for water samples is 100 mL of reagent water spiked with the SMC and carried through the entire analytical scheme. A method blank for soil/solid samples is 6 g of clean quartz sand spiked with the SMC and carried through the entire analytical scheme. A method blank for oil samples is 1 g of clean corn oil spiked with the SMC and carried through the entire analytical scheme. Method blanks shall be carried through the entire analytical procedure.

NOTE: The Agency will provide the Laboratory with further instructions for the analysis of method blanks for wipe samples.

25.2 Frequency

A method blank analysis shall be performed for each matrix type (water, soil/solid, or oil) and with each set of samples. A set of samples is defined as those samples from one Batch that are extracted and analyzed on one instrument during a 24-hour analytical sequence.

25.2.1 The method blank and all associated samples shall be analyzed in the same analytical sequence. If samples from a batch are analyzed in more than one analytical sequence, the associated method blank must also be analyzed in the same analytical sequence. If a method blank extract is used up because of multiple analyses, the Laboratory shall substitute an instrument blank in place of a method blank in all subsequent analytical sequences. The Laboratory shall note this in the Batch Narrative and shall use the EPA identification number as described in Exhibit B for this instrument blank.

25.2.2 An acceptable method blank shall be analyzed before running any samples within an analytical sequence.

25.2.3 When analyzing highly contaminated samples using SPE disks on more than one manifold, the Laboratory should analyze one method blank per extraction manifold. If an unacceptable method blank is analyzed and the contamination can be isolated to a particular manifold, only samples extracted on that manifold will have to be reextracted. If an unacceptable method blank is analyzed and only one method blank is used, all samples from all manifolds shall be reextracted at no additional expense to the Agency.

25.2.4 Criteria for an acceptable method blank is defined in paragraph 25.4.

25.2.5 If all field samples in a Batch are filtered, the associated method blank shall also be filtered. If only a partial set of samples in a Batch are filtered, then a separate method blank shall be run through the filter, extracted, and analyzed.

25.3 Procedure for Method Blank Preparation

25.3.1 Prepare the method blanks at the frequency listed in paragraph 25.2.

25.3.2 Measure out 100 mL of reagent water for each water method blank sample aliquot.

25.3.3 Soil/solid method blanks are 6 g of clean quartz sand.

25.3.4 Prepare water and soil/solid method blanks as described in paragraph 14 or 15 depending on whether solvent or solid phase extraction is utilized.

25.3.5 Spike 1.0 g of corn oil with 1.0 mL of SMC (0.5 µg/mL) and proceed with the pesticides procedure (paragraphs 16.3 - 16.5).

25.3.6 Analyze the method blank extracts. Calculate the results according to paragraph 21.

25.4 Technical Acceptance Criteria

25.4.1 All method blanks shall be analyzed within an acceptable analytical sequence on a GC system meeting the initial three-point calibration criteria (paragraph 8) or valid calibration check criteria (paragraph 9), and the PVS acceptance criteria (paragraph 10).

25.4.2 The SMC recovery criteria of 50-150 percent is advisory only. The SMC recovery in the method blank must, however, be greater than or equal to 20 percent and less than or equal to 200 percent.

25.4.3 The RTS for the SMC in the method blank must be within ± 1.0 percent between the blank SMC RT and the mean SMC RT calculated from the initial calibration.

25.4.4 The target compounds or potential interferences in the method blanks must have a response less than one-half the

response in the corresponding RRT window of the initial calibration low concentration standards.

25.4.5 A method blank may contain a detectable but acceptable concentration of a target compound (less than one-half the response of the initial calibration low concentration standard).

25.4.6 If all criteria are satisfied, the method blank analysis is acceptable and samples may be analyzed. If the method blank is unacceptable, corrective action shall be taken and an acceptable method blank must be analyzed prior to analyzing the associated samples.

25.5 Corrective Action

25.5.1 If a method blank does not meet the technical acceptance criteria, the Contractor shall consider the analytical system to be out of control. It is the Contractor's responsibility to eliminate method interferences caused by contaminants in solvents, reagents, cartridges, disks, glassware, and other sample storage and processing hardware that lead to discrete artifacts and/or elevated baselines in gas chromatograms. If contamination is a problem, the Contractor shall investigate the source of the contamination, and appropriate corrective measures shall be taken and documented before further sample analysis proceeds.

25.5.2 If a compound is found in the method blank (less than one-half the response in the corresponding RRT window of the initial calibration low concentration standard) and is also detected in an associated field sample at less than the CRQL, the compound shall be reported as a nondetect, i.e., with a "U" flag.

25.5.3 If the SMC recovery in the method blank is less than 20 percent, greater than 200 percent, or if peak interferences are present, the method blank shall be immediately rerun. If on reanalysis the method blank SMC recovery is still outside the recovery limits, the method blank and all associated samples shall be reextracted and reanalyzed at no additional cost to the Agency.

25.5.4 Flag all method blank results "S" if the SMC does not meet the advisory recovery criterion of 50-150 percent.

25.5.5 If the SMC RTS criterion is not met for a method blank, sample analyses shall be stopped and the noncompliant blank rerun. If the RTS criterion is still out on reanalysis,

perform corrective action which may include a new initial calibration. DO NOT continue with sample analyses until the SMC RTS is within ± 1.0 percent.

25.5.6 Any samples processed with a method blank that is out of control (i.e., does not meet any of the technical acceptance criteria) shall be reextracted and/or reanalyzed at no additional expense to the Agency.

25.6 Documentation

Method blank results are reported on Forms QI-PEST and QVI-PEST. Reporting requirements are listed in Exhibit B.

26 Instrument Blank Analysis

26.1 Summary

An instrument blank is 1 mL of hexane spiked with 10 µL of SMC (5.0 µg/mL). At least two acceptable instrument blanks shall be analyzed within an analytical sequence: one before sample analyses and one following sample analyses.

26.2 Frequency

An instrument blank shall be analyzed at least twice during the analytical sequence to ensure that the instrument is free from potential contaminants. The first instrument blank analysis shall be performed after the initial three-point calibration in the initial calibration analytical sequence or as the first analysis in a daily calibration check analytical sequence; the second instrument blank analysis shall be performed immediately before the PVS analysis. The Laboratory is encouraged to run additional instrument blanks during the analytical sequence, especially when highly contaminated or complex samples are analyzed. Instrument blanks must be analyzed after analysis of samples with high levels of target compounds or interferents (see paragraph 26.5.6).

26.3 Procedure for Instrument Blank preparation

An instrument blank is 1 mL of hexane spiked with 10 µL of SMC (5.0 µg/mL).

26.4 Calculations

Concentrations of the SMC and any target compounds in the instrument blank are calculated according to the procedures described in paragraph 21. Note: The target compound concentrations (detected concentrations and CRQL values) in the instrument blank shall be reported in the

appropriate concentration units (e.g., report in µg/L if the associated samples are water and in µg/Kg if the associated samples are soil).

26.5 Technical Acceptance Criteria

26.5.1 A minimum of two (2) instrument blanks shall be analyzed during an analytical sequence on a GC system meeting the initial three-point calibration criteria (paragraph 8) or valid calibration check criteria (paragraph 9), and the PVS acceptance criteria (paragraph 10).

26.5.2 The SMC RT in the instrument blank must be within ± 1.0 percent of the mean SMC RT calculated from the initial calibration.

26.5.3 The SMC recovery criterion of 50-150 percent is advisory only. The SMC recovery in the instrument blank must, however, be greater than or equal to 20 percent and less than or equal to 200 percent.

26.5.4 The target compounds or potential interferences in the first instrument blank (analyzed immediately after the initial calibration or before a valid calibration check) must have a response less than one-half the response in the corresponding RRT windows of the initial calibration low level standards.

26.5.5 Subsequent instrument blanks are acceptable with low level contamination. These instrument blanks may contain target compound concentrations up to twice the CRQL (2x CRQL).

26.5.6 Following the analysis of a field sample containing high levels of target compounds or interferents, an instrument blank shall be analyzed and must meet acceptance criteria before proceeding with sample analyses. If an autosampler is utilized, then the field samples run after a high level sample must be carefully evaluated for carryover. The field sample immediately proceeding the high level sample shall be reanalyzed, along with any other samples analyzed after the high level sample which shows evidence of carryover.

26.5.7 High level samples are defined as being field samples that contain target compounds at concentration levels that exceed twice the high level initial calibration standard concentration and/or interferents that are detected at levels greater than the mid level initial calibration concentration response of the nearest target compound.

26.6 Corrective Action

26.6.1 All groups of samples analyzed shall be bracketed with two acceptable instrument blanks. If either instrument blank is unacceptable, corrective action shall be taken and all samples not bracketed by two valid instrument blanks shall be reanalyzed at no additional expense to the Agency.

26.6.2 If the response of any target compound in an instrument blank analyzed after the initial calibration or before a valid calibration check standard is greater than or equal to one-half the response in the corresponding RRT window of the initial calibration low concentration standard, corrective action shall be performed and the system shall be demonstrated to be clean by the analysis of additional instrument blanks until all target compounds are within QC limits.

26.6.3 If any target compound in an instrument blank analyzed after field/QC sample analyses is greater than two times the CRQL, another instrument blank shall be analyzed. If on reanalysis, contamination still exceeds criterion, corrective action shall be performed and the system demonstrated to be clean. Then, all associated field/QC samples analyzed since the last valid instrument blank or method blank which contain those target compounds or interferents found in the instrument blank shall be rerun.

26.6.4 If an instrument blank (other than the first instrument blank in the analytical sequence) contains target compounds or interferents between one-half response and two times the CRQL, all positive results (results greater than or equal to the CRQL) for those compounds in samples analyzed after the last valid instrument blank shall be flagged with a "B".

26.6.5 Flag all instrument blank results "S" if the instrument blank SMC does not meet the advisory recovery of 50-150 percent.

26.6.6 If the instrument blank SMC recovery is less than 20 percent, greater than 200 percent, or if peak interferences are present, sample analyses shall be stopped, corrective action performed, and another instrument blank shall be analyzed. If the SMC RTS is still outside the criterion upon reanalysis, corrective action which may include a new initial calibration shall be performed. All samples analyzed since the last valid method or instrument blank shall be reanalyzed after a valid instrument blank has been demonstrated.

26.6.7 If the SMC RTS criterion is not met for an instrument blank, sample analyses shall be stopped and another instrument blank shall be analyzed. If the SMC RTS criterion is still out on reanalysis, corrective action which may include a new initial calibration shall be performed. DO NOT continue with sample analyses until the RTS is within ± 1.0 percent.

26.6.8 Any samples not bracketed by valid instument blanks or a valid instrument blank and a method blank shall be reanalyzed at no additional expense to the Agency.

26.7 Documentation

Instrument blank results are reported on Forms QI-PEST and QVI-PEST. Reporting requirements are listed in Exhibit B.

27 Laboratory Control Samples

27.1 Summary

The QTM pesticides LCS mixture initially will be supplied to contractors by the Agency. The LCS mixture will contain target compounds at several known concentrations. The Laboratory shall spike the LCS mixture into a clean matrix that is similar to the samples being analyzed. The spiked matrix shall be prepared and analyzed using the procedures described for field samples. Analysis of the LCS will assess the performance of the analytical system prior to analyzing field samples.

NOTE: The Agency will provide the Laboratory with further instructions for the analysis of LCSs for wipe samples.

27.2 Frequency

An LCS shall be analyzed once per matrix per analytical sequence (24 hours) per instrument. The LCS shall be analyzed after the first instrument blank in initial calibration analytical sequence or after the method blank in the daily calibration analytical sequence.

27.2.1 An LCS shall be analyzed with each:

- Set of water field samples (LCS prepared from reagent water);
- Set of soil/solid field samples (LCS prepared with quartz sand); and
- Set of oily field samples (LCS prepared with corn oil).

27.2.2 The LCS shall be analyzed with all associated samples in the same analytical sequence. If samples from a batch are analyzed in more than one analytical sequence, the associated LCS shall be analyzed in the same analytical sequence. If an LCS extract is used up because of multiple analyses, the Laboratory shall use the original stock mix diluted into hexane in place of the original LCS sample in all subsequent analytical sequences. The Laboratory shall prepare this solution by diluting 100 µL of the LCS standard mixture into 5 mL of hexane and concentrating to 1 mL using nitrogen blowdown. The Laboratory shall note this in the Batch Narrative and shall use the EPA identification number as described in Exhibit B for this LCS solution.

27.3 Procedure

Spike the appropriate matrix with the LCS standard mixture and prepare as follows:

27.3.1 Water LCS

27.3.1.1 Allow the LCS mixture ampules to reach room temperature before opening. The ampules must not be opened until preparation/analysis is to occur. Exercise care in breaking the ampules open to avoid injury.

27.3.1.2 Spike 100 mL of reagent water with 100 µL of the LCS standard mixture as described in the instructions provided with the LCS mixtures. Use syringes to perform the spiking to ensure accuracy. Add the SMC and mix and carry through the extraction and clean-up process as described in paragraph 14 or 15, depending on whether solvent or solid phase extraction is utilized. Proceed with the analysis as described in paragraph 19.

27.3.1.3 Nominal aqueous LCS target compound concentrations are as follows:

alpha-BHC	2.50 µg/L
gamma-BHC	1.90 µg/L
Heptachlor	0.40 µg/L
gamma-chlordane	2.40 µg/L
alpha-chlordane	0.30 µg/L
4,4'-DDE	0.30 µg/L
4,4'-DDD	1.90 µg/L
Endrin aldehyde	1.80 µg/L
Endosulfan sulfate	2.20 µg/L
Endrin ketone	0.30 µg/L

27.3.2 Soil LCS

27.3.2.1 Allow the LCS mixture ampules to reach room temperature before opening. The ampules must not be opened until preparation/analysis is to occur. Exercise care in breaking the ampules open to avoid injury.

27.3.2.2 Spike 6 g of quartz sand with 100 µL of the LCS standard mixture as described in the instructions provided with the LCS mixtures. Use syringes to perform the spiking to ensure accuracy. Add the SMC and mix and carry through the extraction and clean-up process as described in paragraph 14. Proceed with the analysis as described in paragraph 19.

27.3.2.3 Nominal LCS target compound concentrations are as follows:

alpha-BHC	41.7 µg/Kg
gamma-BHC	31.7 µg/Kg
Heptachlor	6.7 µg/Kg
gamma-chlordane	40.0 µg/Kg
alpha-chlordane	5.0 µg/Kg
4,4'-DDE	5.0 µg/Kg
4,4'-DDD	31.7 µg/Kg
Endrin aldehyde	30.0 µg/Kg
Endosulfan sulfate	36.7 µg/Kg
Endrin ketone	5.0 µg/Kg

27.3.3 Oil LCS

This section has not been finalized. The LCS composition and concentrations for oils are currently being investigated.

27.3.3.1 Allow the LCS mixture ampules to reach room temperature before opening. The ampules must not be opened until preparation/analysis is to occur. Exercise care in breaking the ampules open to avoid injury.

27.3.3.2 Spike 1 g of corn oil with 1 mL of the LCS standard mixture as described in the instructions provided with the LCS mixtures. Use syringes to perform the spiking to ensure accuracy. Mix and carry through the extraction and cleanup process adding 1.0 mL of SMC (0.5 µg/mL) and hexane and further prepare as described in paragraphs 16.3 to 16.5.

27.3.3.3 Nominal LCS target compound concentrations are as follows:

alpha-BHC	2500 µg/Kg
gamma-BHC	1900 µg/Kg
Heptachlor	400 µg/Kg
gamma-chlordane	2400 µg/Kg
alpha-chlordane	300 µg/Kg
4,4'-DDE	300 µg/Kg
4,4'-DDD	1900 µg/Kg
Endrin aldehyde	1800 µg/Kg
Endosulfan sulfate	2200 µg/Kg
Endrin ketone	300 µg/Kg

27.4 Technical Acceptance Criteria

27.4.1 All LCS compounds must have recoveries between 30 and 130 percent. Up to two LCS compounds may, however, exceed the upper recovery criterion of 130 percent.

27.4.2 All LCS target compound absolute and relative retention times must be within the windows established during the initial calibration.

27.4.3 The RT of the SMC must be within ± 1.0 percent of the mean RT of the SMC established during the initial calibration.

27.4.4 The SMC advisory recovery criterion is 50-150 percent. The SMC recovery in the LCS must, however, be greater than or equal to 20 percent and less than or equal to 200 percent.

27.5 Corrective Action

27.5.1 If any LCS compound recovery is less than 30 percent or more than two LCS compounds exceed 130 percent, the LCS shall be reanalyzed. If upon reanalysis, more than two LCS target compounds are outside the recovery criterion, the LCS and all associated field and QC samples shall be reextracted and reanalyzed. If one or two LCS compounds are outside the recovery criterion, proceed with sample analyses, and flag all sample results of compounds that were out in the LCS with an "L" flag.

27.5.2 If the SMC recovery is less than 20 percent, greater than 200 percent, or if peak interferences are present in the LCS, sample analyses shall be stopped and the LCS reanalyzed. If the LCS SMC recovery is still outside the criterion upon reanalysis, corrective action shall be performed and the LCS and all associated samples shall be reextracted and reanalyzed.

27.5.3 If the RT or RRT for any LCS compound is not within the RT and RRT windows established during the initial calibration, reanalyze the LCS. If upon reanalysis a compound is still outside the windows, a new initial calibration must be performed before samples can be analyzed. The instrument must be recalibrated as described in paragraph 8.

27.5.4 If the SMC RTS criterion is not met for the LCS, sample analyses shall be stopped and the noncompliant LCS reanalyzed. If the SMC RTS is still outside the criterion upon reanalysis, corrective action which may include a new initial calibration shall be performed. DO NOT proceed with sample analyses until the SMC RTS is within ± 1.0 percent.

27.5.5 Any samples processed with an LCS that is out of control (i.e., does not meet any of the technical acceptance criteria) shall be reextracted and/or reanalyzed at no additional expense to the Agency.

27.6 Documentation

Laboratory Control Sample results are reported on Forms QI-PEST, QII-PEST, and QVI-PEST. Reporting requirements are listed in Exhibit B.

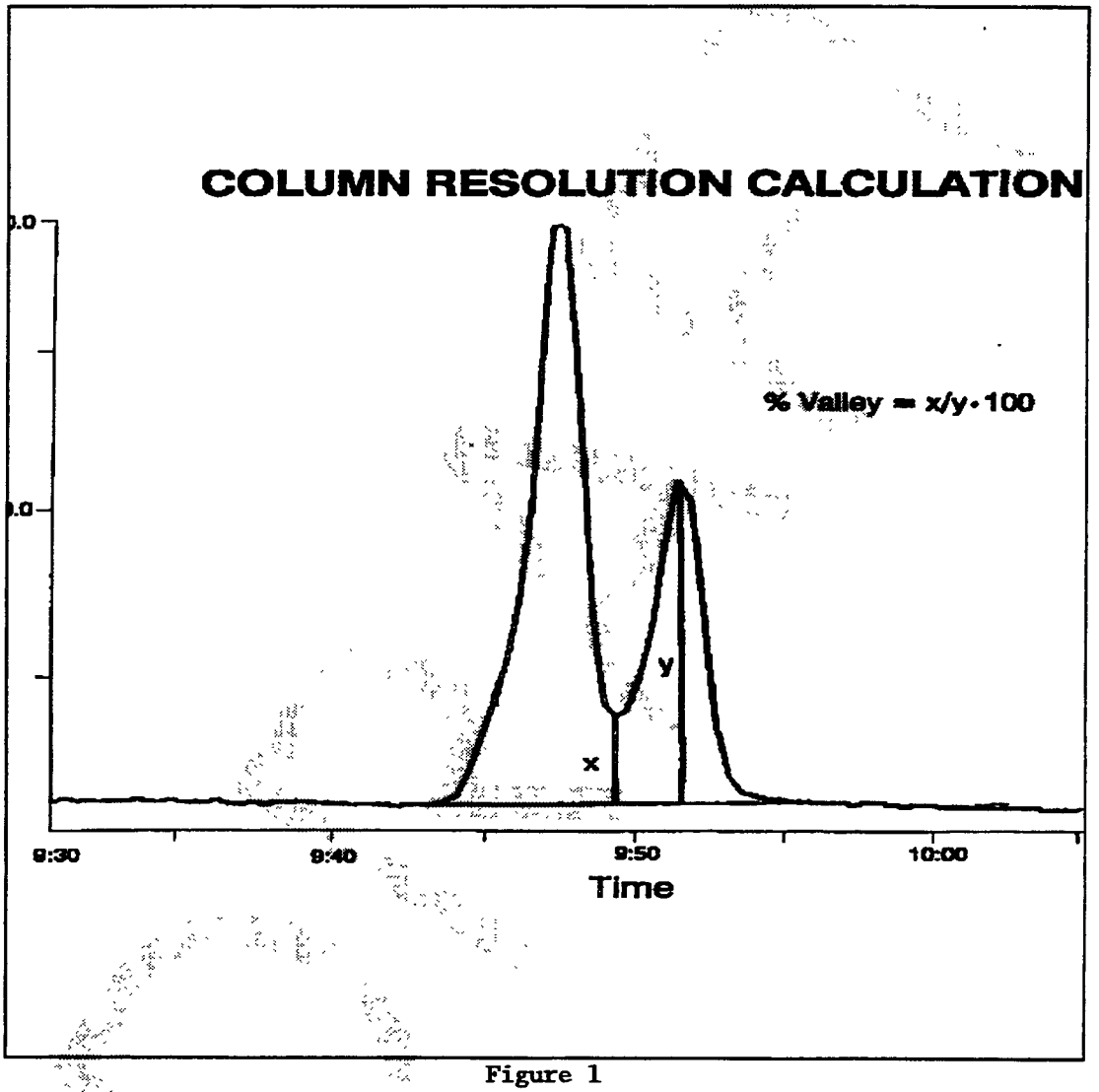
COLUMN RESOLUTION CALCULATION
% Valley = x/y·100
x
y
9:30
9:40
9:50
10:00
Time

Figure 1

Table 1.

List of Pesticides Compounds in Order of Elution*

Compound	Retention Time (mins)
alpha-BHC	6.28
beta-BHC	6.98
gamma-BHC (Lindane)	7.20
delta-BHC	7.83
Heptachlor	9.45
Aldrin	10.53
Heptachlor epoxide	11.93
gamma-Chlordane	12.58
Endosulfan I	12.97
alpha-Chlordane	13.08
p,p'-DDE/Dieldrin**	13.82
Endrin	14.48
Endosulfan II	14.77
p,p'-DDD	15.18
Endrin aldehyde	15.38
Endosulfan sulfate	16.17
p,p'-DDT	16.43
Endrin ketone	17.58
Methoxychlor	18.35
Decachlorobiphenyl (SMC)	23.77

* This elution order is given as general guidance and is based on suggested instrumental operating conditions as given in paragraph 7.

** DDE and dieldrin coelute on this column.

Column: DB-5 megabore capillary column, 15 m x 0.53 mm I.D.

EXHIBIT D

QUICK TURNAROUND METHODS

ANALYTICAL METHOD FOR POLYCHLORINATED BIPHENYLS (PCBs) AS AROCLORS

TABLE OF CONTENTS
PCBs AS AROCLORS

SECTION		Page
I	Introduction	D-3
II	Sample/Extract Storage and Turnaround Times and Equipment and Standards	D-4
1	Sample/Extract Storage and Turnaround Times	D-4
2	Summary of Method	D-4
3	Interferences	D-6
4	Apparatus and Materials	D-6
5	Reagents	D-12
6	Standards	D-13
III	Instrument Quality Control Procedures and Requirements	D-16
7	Instrument Operating Conditions	D-16
8	Calibration of the GC System - Initial Calibration	D-16
9	Calibration of the GC System - Calibration Check	D-21
10	Calibration of the GC System - PVS	D-24
11	System Performance - GC Resolution	D-28
IV	Sample Analysis and Compound Identification and Quantitation	D-31
12	Summary	D-31
13	Phase Separation	D-32
14	Solvent Extraction and Cleanup	D-32
15	Solid Phase Extraction and Cleanup	D-39
16	Sample Preparation and Extraction - Oil Samples	D-45
17	Sample Preparation and Extraction - Wipe Samples	D-46
18	Instrumental Analysis	D-47
19	Dilutions	D-49
20	Identification of Target Compounds	D-50
21	Calculations	D-52
22	Technical Acceptance Criteria	D-55
23	Corrective Action	D-55
24	Documentation	D-56
V	Sample Quality Control Procedures and Requirements	D-57
25	Method Blank Analysis	D-57
26	Instrument Blank Analysis	D-60
27	Laboratory Control Samples	D-63

SECTION I

INTRODUCTION

This Quick Turnaround Method (QTM) is designed for use in determining the concentration of polychlorinated biphenyls (PCBs) as Aroclors in water, soil/solid, oil, and wipe samples. The method requires an experienced PCB analyst to determine if an Aroclor pattern exists, then calculate the PCB concentration on the basis of a specific Aroclor. Exhibit C lists the Aroclor mixtures that will be used as a basis of quantitation for this method along with the Contract Required Quantitation Limits (CRQLs). The method yields identification and quantitation of the Aroclors listed in Exhibit C using single column gas chromatography/electron capture detector (GC/ECD). Aroclor concentrations in samples are reported on an "as-received" basis; no dry weights are calculated. The primary objective of this QTM is to provide analytical data in a timely manner for decision-making during Site Inspections, remediations, and emergency removal activities. The PCB QTM is to be used when rapid data turnaround is required, when the data requestor knows of (or strongly suspects) the presence of PCB contamination, and when there is knowledge regarding potential matrix interferences at the site. The QTM is not equivalent to, nor a replacement for, the CLP Organics Multi-Media Multi-Concentration Analysis.

The method specifies the use of sulfuric acid and potassium permanganate to remove interferences. The rigorous cleanup significantly improves method performances for PCBs but makes the method unsuitable for the analysis of organochlorine pesticides. Sulfuric acid/permanganate causes significant degradation of heptachlor, heptachlor epoxide, dieldrin, endrin, endrin aldehyde, endosulfan I, endosulfan II, and endosulfan sulfate.

The method is suitable for several multicomponent compounds, Aroclors 1016, 1221, 1232, 1242, 1248, 1254, and 1260. These compounds produce a complex pattern of overlapping GC peaks; multicomponent compounds are quantitated on the basis of major peaks within these patterns. Successful use of this method requires an experienced staff for data review, because weathering or environmental partitioning can alter multicomponent patterns in samples. This method can also be used for the analysis of toxaphene if it is added to the initial calibration. Because of the difficulty in measuring multicomponent pesticides, technical chlordane should be analyzed by the QTM pesticide method where the major components of technical chlordane (alpha-chlordane, gamma-chlordane, and heptachlor) are quantitated as separated compounds.

SECTION II

SAMPLE/EXTRACT STORAGE AND TURNAROUND TIMES AND EQUIPMENT AND STANDARDS

1 Sample/Extract Storage and Turnaround Times

1.1 Procedures for Sample Storage

Samples shall be protected from light and refrigerated at 4°C (± 2°C) from the time of receipt until 60 days after delivery of a complete data package to the Agency.

1.2 Procedure for Sample Extract Storage

Sample extracts shall be protected from light and stored at 4°C (± 2°C) for 21 days after delivery of a complete data package to the Agency.

Samples, sample extracts, and standards shall be stored separately.

1.3 Contract Required Sample Turnaround Times

Samples shall be extracted, analyzed, and a summary of the analytical and QC data shall be reported to the appropriate EPA Region via telecommunications network within 48 hours (or 72 hours if more than three fractions are analyzed) of Validated Time of Sample Receipt (VTSR). See Exhibits A and B for specific instructions concerning sample turnaround time and data reporting requirements.

2 Summary of Method

2.1 This analytical method is a GC/ECD method for the analysis of Aroclors and toxaphene in water, soil/solid, oil, and wipe samples. All target compounds and the System Monitor Compound (SMC) shall be extracted from field and QC samples utilizing either solvent or solid phase extraction (SPE) technique. If solvent extraction is utilized, field and QC samples are serially extracted using two 10 mL portions of hexane (for water samples) or hexane/acetone (for soil samples). If SPE is utilized, field and QC samples are eluted through a disk containing a solid matrix (e.g. silica) coated with a chemically bonded C_8 or C_{18} organic phase (or equivalent). The target compounds and SMC are then eluted from the extraction disk with hexane.

2.2 Sample analyses shall be performed using gas chromatographic techniques and shall be conducted within a contract-specified analytical sequence that shall not exceed 24 hours. PCBs are identified and quantitated as Aroclors on the basis of retention time windows and calibration factors established during initial calibration. During initial calibration,

relative retention times (RRTs), retention times (RTs), and identification windows (± 0.005 RRT unit of the RRT or ± 1.0 percent of the RT) are established for each quantitation peak for each low concentration Aroclor standard.

2.3 Initial calibration consists of a single low level standard analysis of target Aroclors and toxaphene except Aroclors 1016 and 1260 which will be combined. A three-point calibration will be performed with the 1016/1260 mixture to assess instrument linearity. Mean calibration factors and percent relative standard deviations (%RSD) shall be calculated for the calibration factors of all 1016/1260 quantitation peaks. The %RSD of the calibration factors for each quantitation peak and the SMC must be less than or equal to 25.0 percent.

2.4 A check of the initial calibration shall be performed no less than every 24 hours, using the mid level concentration of Aroclor 1016/1260 and SMC. Calibration factors calculated from each quantitation peak and the SMC from this calibration check standard must be within ± 35.0 percent of the mean calibration factors established for each quantitation peak during initial calibration. Identification windows shall also be confirmed during the calibration check.

2.5 An analytical sequence also includes method blanks and instrument blanks in which no quantitation peak can be observed at concentrations greater than one-half the response in the corresponding RRT window of the initial calibration low concentration standard. The analytical sequence shall also include the analysis of Laboratory Control Samples (LCS) and Performance Verification Standards (PVS). The LCS will be a "go/no-go" analysis. That is, if the LCS meets performance criteria as stated in paragraph 27, sample analyses may proceed. If, however, the LCS does not meet acceptance criteria, corrective action must be taken before sample analyses are performed. The PVS is two times the concentration of the low level 1016/1260 standard and shall be analyzed at least once during each analytical sequence to verify instrument performance. All samples shall be bracketed by valid PVS analyses or a valid initial calibration or a valid calibration check standard and a valid PVS.

2.6 A System Monitor Compound (SMC) shall be added to all field and QC samples and standards. The SMC is used as a retention time marker to calculate RRTs for the identification of quantitation peaks and to assess extraction efficiency. When the recovery of the SMC in a field sample is less than 10 percent, greater than 200 percent, or if peak interferences are present, absolute retention times are used for quantitation peak identification. The SMC recovery criterion of 50-150 percent is advisory only. Reanalyses of samples are not performed if the SMC recovery is outside the advisory recovery limts.

3 Interferences

3.1 A variety of chemicals extracted from environmental and waste samples will produce ECD response and thus complicate the interpretation of Aroclor patterns. Chemicals such as chlorophenols, organophosphorus pesticides, aldrin, dieldrin, endosulfan (I and II), and endosulfan sulfate, which are normal PCB interferences are removed by the sulfuric acid/permanganate cleanup in this method. Other organochlorine pesticides, particularly, DDT, DDD, and DDE should be removed by the Florisil cartridge procedure. Chlorinated benzenes and napthalenes are not removed by cleanup procedures of this method and are potential interferences.

3.2 Phthalate esters are common interferents encountered in PCB analyses. Phthalate interferences may be minimized by the use of pesticide grade or ultrapure reagents, thorough cleanup of glassware, and avoidance of plastics materials in lab operations. The laboratory shall use proper caution to control phthalate contamination.

3.3 The analytical system must be demonstrated to be free from contamination under conditions of the analysis by analyzing method blanks. Cross-contamination problems shall be minimized by analyzing instrument blanks after samples with high levels of target compounds or other interferents (see paragraph 26).

4 Apparatus and Materials

Brand names, suppliers, and part numbers are for illustrative purposes only. No endorsement is implied. Equivalent performance may be achieved using apparatus and materials other than those specified here; however, demonstration of equivalent performance meeting the requirements of this SOW is the responsibility of the Contractor.

4.1 Gas Chromatograph - The gas chromatography (GC) system shall be capable of temperature programming and flow control that is stable throughout an analytical sequence. The system shall be suitable for splitless or on-column injection and have all required accessories, including syringes, analytical columns, and gases. All GC carrier gas lines shall be constructed from stainless steel or copper tubing. Non-polytetrafluoroethylene (PTFE) thread sealants, or flow controllers with rubber components shall not be used.

4.1.1 Gas Chromatography Column - 15 m x 0.53 mm ID bonded phase silicone-coated fused silica capillary column (J&W DB-608, or DB-1701, Restek, or equivalent) is preferred, but a methyl silicone column (e.g. Supelco SPB-5, J&W DB-5, Restec, or equivalent) may be substituted. A film thickness of 0.25 to 1.0 μm is recommended.

NOTE: The use of a guard column is recommended.

4.1.2 Chromatography Detector - The GC shall be equipped with an electron capture detector (ECD).

4.1.3 Gas Chromatography Injector - Cold (ambient) on-column injectors that allow injection directly into 0.53 mm ID column may be used for this method as long as peaks are gaussian, retention times stable, and calibration check criteria are met.

4.2 Data System - The GC shall be linked to a data system capable of integrating peak areas for any compound detected at or above one-half the CRQL. It is required that the Laboratory be equipped with a PC- or microcomputer-based GC data collection and reduction system for this purpose. The Laboratory shall possess this equipment to provide the quick turnaround of electronic data. The Laboratory shall also be equipped with a microcomputer and contract specified hardware and software to electronically transfer the QTM data to the Regions.

4.3 Solid Phase Extraction Processing Station - As SPE is a developing area in environmental chemistry, the EPA expects that advances will occur within the lifetime of the QTM contracts. Therefore, the brand names listed below are included for illustration purposes only. Any comparable equipment is acceptable, regardless of brand.

4.3.1 Extraction disks - Disks shall be made of Teflon and contain at least 500 mg of C_{18} bonded silica (Varian/3M Empore™, or equivalent). Disks shall be 47 mm in diameter. (Note: an alternative phase may be used if this phase can be demonstrated to meet the QA/QC requirements of this method.)

4.3.2 Vacuum holder - The vacuum holder will be glass and comprised of five (5) parts: the vacuum head, the sample reservoir, a metal clip to hold the reservoir to the head, a large volume receiver (greater than 200 mL) for the sample after elution, and a small volume receiver (10-20 mL) for the solvent after extraction. The vacuum holder (except for the solvent receiver) is sold as a HPLC solvent filtration device (Gelman 4012, or equivalent). The solvent receiver is simply a tube with a ground glass fitting that fits onto the vacuum head.

4.3.3 Vacuum manifold - A 4-6 port vacuum manifold may be used to facilitate simultaneous disk extractions.

4.3.4 Use of depth filter (Whatman Multigrade GMF 150, or equivalent) or inert materials such as Celite 545 (diatomaceous earth, Baker #, or equivalent) are encouraged when samples contain particulates. If depth filters are utilized, each lot shall be tested for contamination prior to use with this method. The depth filters may be checked in conjunction with the SPE disks (depth filters

are placed on top of the SPE disks) by following the procedure outlined in paragraph 4.3.5.

4.3.5 Solid Phase Extraction (SPE) Recovery Check

4.3.5.1 Summary

Before field or QC samples are extracted using the SPE disks, their efficiency shall be verified. An extraction recovery and contamination check shall be performed in order to evaluate the recovery of compounds on the disk, and to check for contamination.

4.3.5.2 Frequency

A check shall be performed on each individual lot of disks, and for every 300 units of a particular lot.

4.3.5.3 Procedure

4.3.5.3.1 Before samples are extracted using a lot of SPE disks, the Laboratory shall perform a recovery check of that lot. Two (2) check solutions shall be prepared. The first is 100 mL of reagent water spiked with 1 mL of the low initial calibration 1016/1260 standard (to demonstrate lack of contamination), and the second is 100 mL of reagent water spiked with 1 mL of the high initial calibration 1016/1260 standard (to demonstrate adequate SPE capacity).

4.3.5.3.2 The low and high SPE recovery check standard solutions used to evaluate SPE disks are prepared by diluting the original 1016/1260 stock calibration solution in methanol. The low and high SPE recovery standard concentrations are equivalent to the low and high calibration 1016/1260 standard mix concentrations respectively. Laboratories shall prepare the SPE recovery check standards in methanol and add one mL of each 1016/1260 calibration solution to 100 mL of reagent water. If the Laboratory experiences solubility problems in preparing the SPE recovery check standard solution, the Laboratory shall prepare the SPE recovery check standards in methanol, add one mL of

each calibration solution to 4 mL methanol, and add the resulting solution to 100 mL of reagent water. The recovery check samples shall be prepared and analyzed according to the procedures in Section IV.

4.3.5.3.3 The SPE recovery check standard solutions shall be analyzed in a valid initial calibration or daily calibration analytical sequence (see paragraph 18.1). Note: if the SPE recovery check standards are the only samples analyzed in the analytical sequence, the method blank shall be replaced with an instrument blank and the LCS shall be prepared by diluting 100 µL of LCS stock mixture into 5 mL of hexane and concentrating to 1mL using nitrogen blowdown. The EPA identification numbers for standards as described in Exhibit B shall be used for the low and high SPE recovery check standard solutions (i.e., QAR1660####, where #### is the amount injected). The EPA identification numbers as described in Exhibit B shall be used for this instrument blank and LCS.

4.3.5.4 Technical Acceptance Criteria

The recovery of the check compounds spiked at the upper limit of the calibration range must demonstrate recovery of 30-110 percent to establish that the SPE media has the capacity to retain compounds at the upper end of the calibration range (i.e., no breakthrough of target compounds is occurring). The recovery check at the low concentration level shall be evaluated to demonstrate that the system performs at low levels and does not introduce method interferences. If any compound recovery is less than 30 percent or greater than 110 percent, then that lot of disks shall not be used.

4.3.5.5 Corrective Action

If the disks do not exhibit acceptable recovery of any spiked compound at the low or high concentration levels, the entire lot shall not be used to extract samples, since the system cannot be demonstrated to be functioning at those levels.

4.3.5.6 Documentation

All data and related documentation for the SPE recovery check analysis shall be maintained by the Laboratory during the term of the contract and shall be available to the Agency during on-site laboratory evaluations or if requested by the TPO or APO.

4.3.6 Extract Cleanup Cartridges - Florisil, 0.5 g solid phase glass extraction cartridges with stainless steel or Teflon frits (Analytichem Florisil PR, or equivalent). Bake the glass florisil cartridges at 140°C overnight to activate (do not exceed 150°C).

4.3.6.1 Florisil Cartridge Check

Each lot number of Florisil cartridge must be tested by the following procedure before the lot is used for sample cleanup. Add 1.0 mL of the Aroclor 1016/1260 mid point calibration standard to the top of a prewashed Florisil cartridge, and elute it with 9 mL of hexane. Adjust the final volume to 1.0 mL and analyze by GC/ECD. The recovery of each compound must be determined for evaluation and reporting purposes. The lot of Florisil cartridges is acceptable if the Aroclors 1016 and 1260 are recovered at 80-110 percent and if no interferences are detected.

4.3.6.2 The florisil cartridge performance check standard solution shall be analyzed in a valid initial calibration or daily calibration analytical sequence (see paragraph 18.1). Note: if the florisil cartridge performance check standard is the only sample analyzed in the analytical sequence, the method blank shall be replaced with an instrument blank and the LCS shall be prepared by diluting 100 µL of LCS stock mixture into 5 mL of hexane and concentrating to 1mL using nitrogen blowdown. The EPA identification numbers for standards as described in Exhibit B shall be used for the low and high SPE recovery check standard solutions (i.e., QAR1660####, where #### is the amount injected). The EPA identification numbers as described in Exhibit B shall be used for this instrument blank and LCS.

4.3.6.3 Documentation

All data and related documentation for the florisil recovery check analysis shall be maintained by the Laboratory during the term of the contract and shall

be available to the Agency during on-site laboratory evaluations or if requested by the TPO or APO.

4.4 Glassware - Sufficient glassware to meet contract requirements shall be reserved for exclusive use in support of this contract.

4.4.1 Erlenmeyer Flasks - 125 mL.

4.4.2 Beaker - 150 mL.

4.4.3 Concentrator tubes - 10 mL.

4.4.4 Kimax concentrator tube (graduated) - 25 mL.

4.4.5 Graduated test tubes - graduated from 1 to 10 mL.

4.4.6 Autosampler vials - appropriate for the GC system.

4.4.7 Centrifuge tubes - 40 mL.

4.4.8 Wide-mouth centrifuge tubes (optional).

4.4.9 Powder funnel - 6 cm (60°).

4.4.10 Pasteur Pipets.

4.4.11 20-mL screw-cap vials (for sulfuric acid/permanganate procedure).

4.4.12 Side-arm flask - 500 mL.

4.4.13 Buchner funnel.

4.5 Laboratory Hardware - The following equipment is required for sample preparation.

4.5.1 Ultrasonic Cell Disrupter - Heat Systems Ultrasonics, Inc. Model W-385 Sonicator (475 watt with pulsing capability, No. 200 1/2" tapped disrupter horn plus No. 419 1/8" standard tapered microtip probe), or equivalent device with a minimum of 375 watt output capability. The 1/8" microtip shall be used for extraction of all soil/solid samples. (NOTE: In order to ensure that sufficient energy is transferred to the sample during the extraction, the microtip probe <u>must</u> be replaced if the tip begins to erode. Erosion of the tip is evidenced by a rough surface.)

4.5.2 Balance - Calibrated and accurate to 0.1 mg.

4.5.3 Centrifuge.

4.5.4 Microsyringe - 10-μL, 50-μL, and 100-μL.

4.5.5 Spatula - Stainless steel.

4.5.6 Hot plate stirrer.

4.5.7 Teflon coated magnets.

4.5.8 Glass wool.

4.5.9 Vortex mixer.

4.5.10 Whatman #42 filter paper.

4.5.11 Whatman vacuum holder.

4.5.12 Nitrogen blowdown apparatus.

4.5.13 Water bath.

5 Reagents

5.1 Reagent water - Reagent water is defined as water in which Aroclors or potentially interfering compounds do not produce a signal greater than one-half the response in the corresponding RRT window of the initial calibration low concentration standard. Reagent water shall be generated by one of the following methods.

5.1.1 Reagent water may be generated by passing tap water through a carbon filter bed containing approximately 500 g of activated carbon (Calgon Corp., Filtrasorb-300, or equivalent).

5.1.2 Reagent water may be generated using a water purification system (Millipore-O-Plus with Organex Q cartridges, or equivalent).

5.1.3 Reagent water may be prepared by boiling for 15 minutes then bubbling contaminant-free inert gas through the water for one hour while maintaining the water temperature at 90°C. While still hot, transfer the degassed water to a narrow-mouth screw-cap bottle, seal with a Teflon-lined septum, and cap.

5.2 Solvents - Hexane, methanol, acetone, and toluene. Pesticide quality, or equivalent.

5.3 Sodium hydroxide solution (0.5 N).

5.4 Sulfuric acid solution (0.5 N).

5.5 Concentrated sulfuric acid.

5.6 Powdered Anhydrous Sodium sulfate.

5.7 Hexane/acetone [(50:50)(v/v)].

5.8 Potassium permanganate (5 percent aqueous solution).

5.9 5:100 methanol/water solution (methanol in water v/v).

5.10 Corn oil.

6 Standards

6.1 Stock Standard Solutions

Stock solutions may be prepared from pure standard materials or purchased as certified solutions. Standard solutions shall be prepared by dissolving pure standards in a suitable solvent in volumetric flasks. When compound purity is assayed to be 96 percent or greater, the weight may be used without correction to calculate the concentration of the stock standard. Exhibit E, Section V provides further directions for preparing and verifying the integrity of stock standard solutions.

6.2 Secondary Dilution Standards

6.2.1 Using stock standard solutions, prepare secondary dilution standards in hexane.

6.2.2 Secondary dilution standards shall be stored at 4°C (± 2°C) with minimal headspace and checked frequently for signs of degradation or evaporation. These procedures are especially important just prior to preparing calibration standards from them.

NOTE: Standards shall not be stored in volumetric flasks, especially when they are prepared with solvents with low boiling points.

6.3 Calibration Standards

6.3.1 A single low concentration standard mixture shall be prepared for each Aroclor and toxaphene in hexane as specified in paragraph 6.3.2. A separate solution must be prepared for each multicomponent mixture with the exception of Aroclors 1016 and 1260, which shall be combined. The 1016/1260 mixture and the SMC shall also be prepared at three concentration levels, the low concentration, mid concentration at 5 times the low concentration, and the high concentration at 25-50 times the low level. The low concentration standard, as specified in paragraph 6.3.2, achieves the sample extract compound concentrations equivalent to the sample compound CRQLs as listed in Exhibit C. The high

concentration level shall be near the upper end of the linear range.

6.3.2 Low Concentration Multicomponent Calibration Solutions

Multicomponent Standard	Concentration (ng/mL)	SMC	Concentration (ng/mL)
Aroclor 1016/1260	100/100	Decachlorobiphenyl	20.0
Aroclor 1221	200	Decachlorobiphenyl	20.0
Aroclor 1232	100	Decachlorobiphenyl	20.0
Aroclor 1242	100	Decachlorobiphenyl	20.0
Aroclor 1248	100	Decachlorobiphenyl	20.0
Aroclor 1254	100	Decachlorobiphenyl	20.0
Toxaphene	500	Decachlorobiphenyl	20.0

6.3.3 All standards shall be stored at 4°C (± 2°C) in Teflon-sealed glass bottles. Calibration solutions shall be replaced after 6 months, or sooner, if comparison with check standards indicates a problem.

6.4 Calibration Check Standard

The calibration check is a daily one-point check of the Aroclor 1016/1260 initial calibration. The mid level Aroclor 1016/1260 standard used in the initial calibration is the calibration check standard. The calibration check standard shall be prepared in a volumetric flask and diluted to final volume with hexane.

6.5 System Monitor Compound

The System Monitor Compound (SMC) is decachlorobiphenyl. A stock solution of the SMC in acetone shall be prepared as described in paragraph 6.1, and a spiking solution at a concentration of 2.0 µg/mL in acetone shall be prepared from the stock solution. Each field and QC sample must be spiked with the SMC before analysis. Water samples (100 mL) shall be spiked with 10 µL of the SMC. Soil/solid samples (6 g) shall be spiked with 10 µL of the SMC. For oil analysis, prepare decachlorobiphenyl at a concentration of 0.2 µg/mL and add 1.0 mL of this solution to 1 g of oil sample (see Section IV.) The SMC is employed to detect shifts in retention time of eluting peaks. Additionally, the SMC will be used to monitor the extraction efficiency.

Note: Reagent grade acetone shall be used to prepare the SMC stock and working solutions. The Laboratory shall ensure that the acetone used to prepare the SMC stock and working solutions is free of any contamination.

6.6 Performance Verification Standard

The Performance Verification Standard (PVS) shall be analyzed at least once during each analytical sequence to assess system stability. The PVS is two times the concentration of the low level Aroclor 1016/1260 initial calibration standard.

6.7 Laboratory Control Sample

Laboratory Control Samples (LCS) containing known amounts of Aroclors traceable to primary standards will initially be supplied by the Agency. Following receipt of these initial supplies, however, the Laboratory shall prepare its own LCS standards. The LCS shall be spiked into a clean matrix and prepared using all steps of this protocol. An appropriate amount of the LCS shall be added to reagent water and analyzed with each Batch of water samples. An appropriate amount of the LCS shall be added to clean quartz sand and analyzed with each Batch of soil/solid samples. An appropriate amount of the LCS shall be added to clean corn oil and analyzed with each Batch of oil samples. If a Batch contains both water and soil/solid samples, an LCS shall be prepared and analyzed for each matrix. (Note: If wipe sample analyses are performed, the Agency will provide the Laboratory with further instructions for the preparation and analysis of LCSs for wipe samples.) All LCS compounds must have recoveries between 30 and 130 percent before sample analysis may begin (see paragraph 27).

NOTE: The Laboratory is expected to maintain control charts of the recoveries of the two representative LSC compounds as an internal QC procedure.

6.8 Storage of Standard Solutions

6.8.1 Stock standard solutions, secondary standard solutions, and working standard solutions shall be stored at 4°C (± 2°C) in Teflon-lined screw-cap amber bottles (also see paragraph 6.3.3).

6.8.2 All standards shall be protected from light.

6.8.3 Samples, sample extracts, and standards shall be stored separately.

SECTION III

INSTRUMENT QUALITY CONTROL PROCEDURES AND REQUIREMENTS

7 Instrument Operating Conditions

The following are the suggested gas chromatographic analytical conditions.

Column: J&W DB-1701, DB-608 or DB-5 (or equivalent), 15 m x 0.53 mm ID, 0.25 to 1.0 µm film thickness fused silica capillary column (FSCC).

Carrier Gas:	Helium
Flow Rate:	5-7 mL/min
Injector Temperature:	205°C *
Detector Temperature:	300°C
Initial Temperature:	140°C
Initial Hold Time:	1 min
Ramp Rate:	10°C/min
Final Temperature:	250°C
Final Hold Time:	8 min

* Cold (ambient) on-column injectors that allow injection directly into 0.53 mm ID column may be used for this method as long as peaks are gaussian, retention times are stable, and calibration criteria are met.

NOTE: The typical run time under these conditions is 25 minutes. It may be necessary to adjust GC conditions on individual instruments to optimize detection of Aroclors peaks. It may also be necessary to adjust detector conditions to optimize instrument sensitivity.

8 Calibration of the GC System - Initial Calibration

8.1 Summary

8.1.1 Prior to the analysis of samples and required blanks, each GC system must be initially calibrated to ensure that the instrument meets the minimum performance requirements of the method. The initial calibration is accomplished by analyzing the low level Aroclor and toxaphene standards and the low, mid, and high level 1016/1260 Aroclor standards specified in paragraph 6.3. The technical acceptance criteria for the initial calibration are given in paragraph 8.5. The low level initial calibration standards shall be used to establish the calibration factors used for Aroclor quantitation and to define the retention time windows for Aroclor identification. Additionally, the low, mid, and high level 1016/1260 standards will be analyzed to assess instrument

linearity and to determine the mean SMC retention time for evaluating SMC retention time shifts (RTS) during analyses. All samples shall be analyzed during the contract specified 24-hour analytical sequence.

8.1.2 Aroclor identification shall be based on matching patterns of standards with peaks in samples and by RRT windows for 3-5 quantitation peaks for each Aroclor. These RRT windows will be established from the low level initial calibration standards and must be used in all field samples where the SMC recovery is greater than or equal to 10 percent and less than or equal to 200 percent.

8.1.3 Aroclor identification shall be based on pattern recognition and the absolute retention time windows established from the low level initial calibration standards in all field samples where the SMC recovery is less than 10 percent, greater than 200 percent, or if peak interferences are present.

8.1.4 Shifts in the chromatographic peaks shall be evaluated by comparing the RT of the SMC in all analyses with the mean RT of the SMC calculated from the 1016/1260 initial calibration standards. The retention time shift is referred to as RTS or RT %D (see paragraph 21.4.1). The RT of the SMC for field and QC sample analyses must be within ± 1.0 percent of the mean RT calculated from the 1016/1260 initial calibration standards.

8.2 Frequency

8.2.1 An initial calibration shall be performed to determine Aroclor patterns, RRT and RT windows, calibration factors, and to assess instrument linearity. A new initial calibration is required whenever calibration check standards or performance verification standards cannot satisfy QC criteria. A new initial calibration is also required whenever major instrument maintenance has been performed such as column or detector replacement. An initial calibration must be performed for each GC and for each chromatographic column which are used to perform these analyses.

8.2.2 An analytical sequence is a contractually-defined sequence of GC analyses which consists of an initial calibration or a valid calibration check, field samples, LCSs, method and instrument blanks, PVSs, and other QC samples run within a 24-hour period (see paragraph 18 for the required sequence of samples).

8.2.3 Analysis of the initial calibration shall begin with the injection of the high level 1016/1260 standard followed by the mid level and low level 1016/1260 standards and the single point standards.

8.2.4 The analytical sequence concludes with an acceptable analysis of an instrument blank and a PVS (see paragraph 10).

8.2.5 Samples shall be analyzed only after meeting the technical acceptance criteria for the initial calibration or a valid calibration check standard.

8.3 Procedure

8.3.1 The GC system shall be set up per the requirements of paragraph 7.

8.3.2 Prepare calibration standard solutions containing the SMC and individual Aroclors using the procedure listed in paragraph 6.3.

8.3.3 The calibration solutions shall be equilibrated to ambient temperature before injection (approximately one hour).

8.3.4 Inject between 1 and 5 μL of each calibration standard. The same injection volume shall be used for all calibrations and field/QC sample analyses.

8.4 Calculations

8.4.1 The quantitation of Toxaphene or Aroclors must be accomplished by comparing the heights or the areas of three to five major peaks of the multicomponent compound in the sample with the calibration factors for the same peaks established during the initial calibration sequence. The following table lists the number of potential quantitation peaks for each Aroclor and Toxaphene.

Aroclor/Toxaphene	No. of Potential Quantitation Peaks
1016/1260	5/5
1221	3
1232	4
1242	5
1248	5
1254	5
Toxaphene	4

8.4.2 The choice of the peaks used for multicomponent quantitation and the recognition of those peaks may be complicated by the

environmental alteration of the Aroclors or Toxaphene and by the presence of coeluting compounds and/or matrix interferences.

8.4.3 Calculate the calibration factor (ratio of the total peak area or height to the mass injected) for each quantitation peak in the initial calibration standards and the SMC using equation D.1 (EQ. D.1):

$$\textit{Calibration Factor} = \frac{\textit{Total Area of Peak or Peak Height}}{\textit{Mass injected (ng)}} \qquad \text{EQ. D.1}$$

8.4.4 Calculate the %RSD of the calibration factors of the low level, mid level, and high level Aroclor 1016/1260 standard quantitation peaks and the SMC for the initial calibration using the following equation.

$$\%RSD = \frac{SD}{\bar{x}} \times 100 \qquad \text{EQ. D.2}$$

where: SD = standard deviation.

Standard deviation is calculated using the following equation:

$$SD = \sqrt{\sum_{i=1}^{N} \frac{(x_i - \bar{x})^2}{N - 1}} \qquad \text{EQ. D.3}$$

where: x_i = individual calibration factor (per peak).

$\bar{x}$ = mean of three initial calibration factors (per peak).

N = number of calibration standards.

Equation D.4 is the general formula for the mean of a set of values.

$$\bar{X} = \sum_{i=1}^{N} \frac{X_i}{N} \qquad \text{EQ. D.4}$$

where: $\bar{X}$ = mean of values.

X_i = value.

N = number of values.

8.4.5 Calculate the RRT for each target compound using the following equation:

$$RRT = \frac{RT_{component}}{RT_{SMC}} \qquad \text{EQ. D.5}$$

8.4.6 Calculate the mean RRT and RT for each quantitation peak by using equation D.4.

8.5 Technical Acceptance Criteria

8.5.1 The %RSD of the calibration factors for each Aroclor 1016/1260 quantitation peak and the SMC in the initial calibration must be less than or equal to 25.0 percent.

8.5.2 The RT of the SMC in the standards must be within ± 1.0 percent of the mean SMC retention time calculated from the 1016/1260 initial calibration standards.

8.5.3 The peak resolution of Aroclor 1016 and 1260 must be evaluated in the initial calibration before proceeding with sample analyses (see paragraph 11).

8.5.4 The chromatographic peak response for all quantitation peaks in the low concentration standard must be greater than 10 percent of full-scale deflection.

8.6 Corrective Action

8.6.1 If the %RSD for any Aroclor 1016/1260 quantitation peak or SMC in the initial calibration is greater than 25.0 percent, the instrument has not demonstrated adequate linearity to be used for this method. Corrective action shall be taken and documented.

8.6.2 If the SMC RT is not within ± 1.0 percent of the mean SMC retention time calculated from the 1016/1260 initial calibration standards, the Laboratory shall perform corrective action which may include a new initial calibration. DO NOT proceed with sample analysis until the RTS is within ± 1.0 percent.

8.6.3 If the response for any quantitation peak in the low concentration standard is not greater than 10 percent of full-scale deflection, the Laboratory shall perform corrective action and make

appropriate adjustments before sample analyses are started, to ensure that all quantitation peak responses in the low concentration standard are greater than 10 percent of full-scale deflection.

8.6.4 Corrective action may include optimizing system performance by adjusting gas flows, replacing the GC injector liner, column, or the precolumn, or removing 0.5-1 m of the analytical column.

8.6.5 All initial calibration technical acceptance criteria shall be met before any samples or required blanks are analyzed. Any samples or required blanks analyzed when the initial calibration criteria have not been met shall require reanalysis at no additional cost to the Agency.

8.7 Documentation

Initial calibration results are reported on Forms QIVA-PCB, QIVB-PCB, and QVI-PCB. Reporting requirements are listed in Exhibit B.

9 Calibration Check

9.1 Summary

A check of the initial calibration sequence shall be performed at the beginning of every 24-hour analytical sequence that includes field sample analyses. This check of the initial calibration shall be performed using the mid level Aroclor 1016/1260 standard. The percent difference (%D) between the calibration factor in the calibration check standard and the average calibration factor from the initial calibration is calculated for each quantitation peak and the SMC, and must meet the technical acceptance criterion given in paragraph 9.5. The SMC RTS and Aroclor peak resolution must also meet technical acceptance criteria as stated in paragraph 9.5 and paragraph 11, respectively. Only after all these criteria are met, can sample analyses begin.

NOTE: Aroclor identification and quantitation shall be performed based on peak patterns, calibration factors, and compound RT and RRT windows established from the low level standards during initial calibration.

9.2 Frequency

9.2.1 Each GC used for analysis shall be checked to verify the initial calibration for each twenty-four (24) hour period of operation. This procedure is to ensure that the instrument stability has been maintained.

9.2.2 An analytical sequence is a contractually-defined sequence of GC analyses which consists of an initial calibration or a valid calibration check standard, field samples, LCSs, method and

instrument blanks, PVSs, and other QC samples run within a 24-hour period (paragraph 18).

9.2.3 The analytical sequence shall be concluded with an acceptable analysis of an instrument blank and a PVS (see paragraph 10).

9.2.4 Samples shall be analyzed only after meeting the technical acceptance criteria for the initial calibration or a valid calibration check standard.

9.3 Procedure

9.3.1 The GC system shall be set up per the requirements of paragraph 7.

9.3.2 Prepare the calibration check standard solution containing the SMC and the 1016/1260 Aroclors using the procedures listed in paragraph 6.3 and 6.4.

9.3.3 The calibration check solution shall be equilibrated to ambient temperature before injection (approximately one hour).

9.3.4 Inject between 1 to 5 µL of the mid level 1016/1260 calibration standard. The same injection volume shall be used for all calibrations and field/QC sample analyses.

9.4 Calculations

9.4.1 Calculate the calibration factor (ratio of the total peak area or height to the mass injected) for each quantitation peak and the SMC in the calibration check standard analysis using the following equation.

$$\textit{Calibration Factor} = \frac{\textit{Total Area of Peak or Peak Height}}{\textit{Mass injected (ng)}} \qquad \text{EQ. D.6}$$

9.4.2 Calculate the %D between the calibration factors from the calibration check standard and the mean calibration factors from the initial calibration using the following equation. (NOTE: For the SMC, calculate the %D between the calibration factor calculated from the calibration check and the mean calibration factor calculated from the 1016/1260 standards analyzed during the initial calibration).

$$\%D = \frac{\bar{x} - x_c}{\bar{x}} \times 100 \qquad \text{EQ. D.7}$$

where: $\bar{x}$ = mean initial calibration factor for the appropriate quantitation peak.

x_c = calibration factor from current calibration check standard for the appropriate quantitation peak.

9.5 Technical Acceptance Criteria

9.5.1 The %D between the calibration factors for each Aroclor 1016/1260 quantitation peak and SMC in the calibration check standard and the mean calibration factor for the quantitation peaks or SMC in the initial calibration must be within ± 35.0 percent.

9.5.2 All Aroclor 1016/1260 calibration check standard compound quantitation peak absolute and relative retention times must be within the windows established from the low calibration standard during the initial calibration. Report calibration check RT and RRT data on Form QIB-PCB (see Exhibit B).

9.5.3 The retention time of the SMC in the calibration check standard must be within ± 1.0 percent of the mean SMC retention time calculated from the 1016/1260 initial calibration standards.

9.5.4 The peak resolution in Aroclor 1016 and 1260 must be evaluated in the calibration check standard before proceeding with sample analyses (see paragraph 11).

9.6 Corrective Action

9.6.1 If the %D for any quantitation peak or the SMC is not within ± 35.0 percent, reanalyze the calibration check standard. If upon reanalysis any quantitation peak or SMC is still outside criteria, a new initial calibration shall be performed before samples can be analyzed. The instrument must be recalibrated as described in paragraph 8.

9.6.2 If the RT or RRT for any Aroclor 1016/1260 quantitation peak is not within the RT and RRT windows established from the low calibration standard during the initial calibration, reanalyze the calibration check standard. If upon reanalysis a quantitation peak is still outside the window, a new initial calibration must be performed before samples can be analyzed. The instrument must be recalibrated as described in paragraph 8.

9.6.3 If the SMC RT is not within ± 1.0 percent of the mean SMC RT calculated from the Aroclor 1016/1260 initial calibration, the calibration check standard shall be immediately reanalyzed. If the RTS is still outside criterion upon reanalysis, corrective action shall be performed, which may include a new initial calibration. DO NOT proceed with sample analyses until the SMC RTS is within ± 1.0 percent.

9.6.4 If the peak resolution criterion is not met, the Laboratory must perform corrective action and demonstrate adequate resolution before samples can be analyzed (see paragraph 11).

9.6.5 All calibration check technical acceptance criteria shall be met before any samples or required blanks are analyzed. Any samples or required blanks analyzed when the calibration check criteria have not been met shall require reanalysis at no additional cost to the Agency.

9.7 Documentation

Calibration check standard results are reported on Forms QIB-PCB, QV-PCB, and QVI-PCB. Reporting requirements are listed in Exhibit B.

10 Performance Verification Standard (PVS)

10.1 Summary

A performance verification standard (PVS) shall be analyzed at the end of every 24-hour analytical sequence. The analysis of the PVS shall be started within 24 hours after the injection of the first initial calibration standard or the instrument blank analyzed before a valid calibration check standard. The PVS is two times the concentration of the low level Aroclor 1016/1260 standard from the initial calibration (see paragraph 6.3.2).

10.2 Frequency

An acceptable PVS must be analyzed at the conclusion of the analytical sequence. The PVS analysis shall be started within 24 hours after the injection of the first initial calibration standard or the instrument blank analyzed before a valid calibration check standard. If a successful PVS analysis is not obtained at the conclusion of the analytical sequence, all samples analyzed since the last successful PVS, initial calibration, or valid calibration check standard shall be reinjected and reanalyzed in a valid analytical sequence at no additional expense to the Agency. The Laboratory is encouraged to run additional PVS analyses during an analytical sequence to minimize unpaid reanalyses. If an acceptable PVS is analyzed during an analytical sequence, the Laboratory may continue to collect data under the current calibration until the conclusion of the current 24-hour sequence. If at

any time an unsuccessful PVS analysis is made, the Laboratory shall stop sample analysis and immediately reanalyze the PVS. Up to two injections of the PVS may be used to satisfy the criteria. If on reanalysis the PVS is still outside QC criteria, the Laboratory shall take corrective action and recalibrate the GC (run a new initial calibration) prior to reinitiating sample analyses. Recalibration will begin a new analytical sequence.

10.3 Procedure

10.3.1 The GC conditions shall be the same as those used for analyzing samples.

10.3.2 The PVS is two times the concentration of the low level Aroclor 1016/1260 standard used in the initial calibration (see paragraphs 6.3 and 6.6).

10.3.3 The PVS solution shall be equilibrated to ambient temperature prior to injection (approximately one hour).

10.3.4 The same injection volume shall be used for all field and QC samples and standards including the PVS.

10.4 Calculations

The amount of Aroclor 1016/1260 and the SMC in the PVS shall be calculated using the following equation.

$$Amount\ Observed = \frac{A_x}{CF_m} \qquad \text{EQ. D.8}$$

where: A_x = area or peak height of the appropriate PVS quantitation peak or SMC.

CF_m = mean calibration factor established during the initial calibration for the appropriate quantitation peak. (NOTE: For the SMC calculation, use the mean calibration factor calculated from the 1016/1260 initial calibration standards).

An average amount (average amount observed) of the five quantitation peaks for both 1016 and 1260 are then determined using the following equation.

$$\bar{X} = \sum_{i=1}^{N} \frac{X_i}{N} \qquad \text{EQ. D.9}$$

where: $\bar{X}$ = mean concentration.

X_i = individual peak concentration.

N = number of quantitation peaks.

The amount recovered is calculated using the following equation.

$$\textit{Amount Recovered} = \frac{\textit{Average Amount Observed (ng)}}{\textit{Amount Added (ng)}} \times 100 \qquad \text{EQ. D.10}$$

10.5 Technical Acceptance Criteria

10.5.1 All PVS target compounds must have a calculated recovery (mean of the 5 quantitation peaks) of 75-125 percent to report data without flags.

10.5.2 If recovery of a PVS compound is not within 75-125 percent but still within an expanded recovery window of 50-150 percent, the associated sample analyses results shall be flagged "P" (see paragraph 10.6).

10.5.3 All Aroclor 1016/1260 compound quantitation peak absolute and relative retention times must be within the windows established from the low calibration standard during the initial calibration. Report PVS RT and RRT data on Form QIB-PCB (see Exhibit B).

10.5.4 The SMC recovery criterion of 50-150 percent is advisory only. Reanalysis of the PVS is not performed if the SMC recovery is outside the advisory recovery limts. The SMC recovery in the PVS must, however, be greater than or equal to 20 percent and less than or equal to 200 percent.

10.5.5 The SMC RT in the PVS must be within ± 1.0 percent of the mean SMC RT calculated from the 1016/1260 initial calibration standards.

10.5.6 The peak resolution for Aroclor 1016 and 1260 must be evaluated in the PVS before proceeding with sample analyses (see paragraph 11).

10.6 Corrective Action

10.6.1 If recovery of an Aroclor is not within 75-125 percent but still within an expanded recovery window of 50-150 percent, flag the Aroclor "P" in all associated field sample results generated since the last valid PVS, initial calibration or valid calibration check standard.

10.6.2 If either (or both) Aroclor in the PVS is outside the expanded recovery range, the PVS shall be reanalyzed immediately. If, on reanalysis, either (or both) Aroclor is still outside the expanded recovery range, stop sample analyses, perform corrective action, run a new initial calibration, and reanalyze all samples run after the last valid PVS, initial calibration or valid calibration check standard before proceeding with sample analyses.

10.6.3 If the RT or RRT for any Aroclor 1016/1260 quantitation peak is not within the RT and RRT windows established from the low calibration standard during the initial calibration, reanalyze the PVS. If upon reanalysis a compound peak is still outside the windows, a new initial calibration must be performed before samples can be analyzed. The instrument must be recalibrated as described in paragraph 8. Reanalyze all samples run after the last valid PVS, initial calibration, or valid calibration check standard before proceeding with sample analyses.

10.6.4 If the SMC RTS criterion is not met for a PVS, sample analyses shall be stopped and the noncompliant PVS immediately reanalyzed. If the SMC RTS is still outside the criterion upon reanalysis, corrective action shall be performed, which may include a new initial calibration. DO NOT continue with sample analyses until the RTS is within ± 1.0 percent. Reanalyze all samples that were run between the noncompliant PVS and the last valid PVS, initial calibration, or valid calibration check standard before proceeding with sample analyses.

10.6.5 The SMC recovery criterion of 50-150 percent is advisory only. The SMC recovery in the PVS must, however, be greater than or equal to 20 percent and less than or equal to 200 percent.

10.6.6 If the PVS SMC recovery is less than 20 percent, greater than 200 percent, or if peak interferences are present, stop sample analyses, perform corrective action, and immediately reanalyze the noncompliant PVS. If the SMC recovery is still out on reanalysis, perform corrective action and start a new analytical sequence. All samples analyzed since the

last valid PVS, initial calibration, or valid calibration check standard shall be reanalyzed within a valid analytical sequence.

10.6.7 If the peak resolution criterion is not met, the Laboratory shall perform corrective action and demonstrate adequate resolution before samples can be analyzed (see paragraph 11).

10.6.8 If all PVS criteria cannot be met after having taken corrective action, reanalyze (do not re-extract) the associated field samples in another valid analytical sequence. If on reanalyses all QC sample criteria are met and the PVS criteria still cannot be met, then submit all sample data from both sequences. The Laboratory shall describe in the Batch narrative the problems associated with the PVS and how the field sample matrix may have affected the PVS analyses. If the Laboratory can demonstrate that the problems are due to matrix effects, then both sequences are billable.

10.6.9 If a PVS reanalysis is required because of a non-compliant initial PVS analysis, the PVS reanalysis must be started within 26 hours after the start of the current analytical sequence.

10.6.10 Because reanalysis, at no additional cost to the Agency, is required if PVS technical acceptance criteria are not met, more frequent analysis of the PVS is recommended, especially when highly contaminated or complex samples are analyzed.

10.7 Documentation

Results of PVS analyses are reported on Forms QIB-PCB, QIII-PCB, and QVI-PCB. Reporting requirements are listed in Exhibit B.

11 System Performance - GC Resolution

11.1 Summary

Quantitation of Aroclors is primarily accomplished using pattern recognition and matching RTs and RRTs of quantitation peaks. Because capillary columns are used, peak resolution is not usually a limitation of this method. The method does require an experienced PCB analyst to make Aroclor identifications and to establish that no significant change in Aroclor patterns has occurred whenever a calibration check standard or PVS is analyzed. If a change in pattern is seen, identification and quantitation is adversely affected and the Laboratory shall recalibrate.

11.2 Frequency

11.2.1 Initial calibration - The peak resolution in the PCB pattern for the low level Aroclor 1016/1260 standard shall be noted by the analyst before proceeding with sample analyses.

11.2.2 Calibration check standard - The peak resolution for Aroclors 1016 and 1260 shall be evaluated for each calibration check standard. The analyst shall establish that the pattern has not changed before proceeding with sample analyses.

11.2.3 Performance verification standard - The peak resolution for Aroclors 1016 and 1260 shall be evaluated for each PVS that is analyzed in a valid analytical sequence. The analyst shall establish that the pattern has not changed before proceeding with sample analyses.

11.3 Technical Acceptance Criteria

11.3.1 Any pair of adjacent peaks fully resolved in the low level Aroclor 1016/1260 initial calibration standard must not exceed 25 percent valley in the calibration check or performance verification standards.

11.4 Corrective Action

11.4.1 If the Aroclor pattern changes and any pair of adjacent peaks fully resolved in the low level Aroclor 1016/1260 initial calibration standard exceeds the 25 percent valley criterion in the calibration check, corrective action shall be performed. A valid calibration check must be demonstrated or a new initial calibration shall be performed and documented before proceeding with sample analyses.

11.4.2 If the Aroclor pattern changes and any pair of adjacent peaks fully resolved in the low level Aroclor 1016/1260 initial calibration standard exceeds the 25 percent valley criterion in the PVS, the PVS shall be immediately reanalyzed. If after reanalysis the PVS percent resolution is still outside criterion, corrective action shall be performed and a valid calibration check demonstrated or new initial calibration performed. Reanalyze all samples run after the last valid PVS, initial calibration, or a valid calibration check standard before proceeding with sample analyses.

11.4.3 Loss of column resolution (a higher percent valley) could indicate injector contamination or column degradation; therefore, injection port and/or column maintenance may be

required. Maintenance may include replacement of the injector liner and/or removing 0.5-1 m of the column. If these measures do not work, column replacement should be considered.

11.5 Documentation

Percent resolution results are reported on Forms QII-PCB, QIII-PCB, and QV-PCB. Reporting requirements are listed in Exhibit B.

SECTION IV

SAMPLE ANALYSIS AROCLOR IDENTIFICATION AND QUANTITATION

12 Summary

12.1 This method is designed for use in the rapid analysis of water, soil/solid, oil, and wipe samples for PCBs measured as Aroclors. If, upon inspection of a sample, the Contractor suspects that the sample is not amenable to this method, contact the Regional TPO or the CLASS contractor for instructions. For Superfund emergency removal actions, contact the Regional TPO or the Headquarters APO for instructions. If, for emergency response actions, the TPO or APO are not available, contact the Regional On-Scene Coordinator (OSC) for instructions. The Laboratory must remember that it shall follow the requirements in this SOW without deviation.

12.2 Before samples or required blanks can be analyzed, the instrument must meet initial calibration or a valid calibration check standard and column resolution technical acceptance criteria. All sample extracts, required blanks, LCS, PVS, and calibration standards shall be analyzed under the same instrumental conditions and shall be allowed to warm to ambient temperature (approximately one hour) before preparation and analysis.

12.3 The laboratory shall perform sample extraction and cleanup of water samples utilizing either solvent (paragraph 14) or solid phase (paragraph 15) extraction and cleanup. The laboratory must meet all QA/QC requirements as stated under this contract using either of these extraction/cleanup techniques. The solvent extraction procedures are recommended for the cleanup and extraction of all samples; however, Aroclors SPE procedures for waters may be used if equivalency to the solvent extraction procedures can be demonstrated by the Laboratory. Solvent extraction and cleanup procedures shall be used for non-aqueous samples.

12.4 Blank samples, such as trip blanks and field blanks, supplied by the Region and included with a batch of field samples shall be prepared, analyzed, and reported as water samples. Occasionally, a water QC sample (e.g., field and trip blanks) will be included with a batch of soil samples. If the laboratory is not certain whether a water sample associated with a batch of soil samples is a QC sample, contact the Regional TPO or the CLASS contractor.

NOTE: If water blanks provided by the Region, such as trip and field blanks are included in a batch of soil samples, the Laboratory is not required to prepare and analyze an associated water method blank or a water LCS.

12.5 If unusual or high concentration samples are received, see Exhibit D, Appendix B for general guidance on screening and sample preparation.

13 Phase Separation

Multi-phasic samples shall be phase-separated into their individual phases. The phase separation techniques employed will vary according to the types of samples received. Since it is impossible to know the number and types of phases that will be present in a sample, the choice of phase separation techniques is left to the professional judgement of the analyst. Various techniques can be employed to separate the phases. These include pipetting off liquid phases (decanting should not be done), centrifuging to remove suspended solids, and use of spatulas to remove solids (wooden tongue depressors work well). Whenever possible, phase separation operations should be done with disposable glassware. The phases should be separated into glass containers with teflon-lined screw caps. This allows for storage and handling of the waste in a safe manner.

13.1 Samples received containing multiple phases such as water, oil, and soil/solid in the same sample jar shall be "phase separated" into individual phases.

13.2 Each individual phase is taken through the procedure as a subsample. Report analytical results for each sample phase. Note: Each multi-phase sample shall be identified using the EPA sample number convention for multi-phase samples as specified in Exhibit B.

13.3 Do not analyze any phase that represents less than 10 percent of the total sample volume.

13.4 In the following procedures, where applicable, references to "samples" explicitly mean "single phase units."

14 Solvent Extraction and Cleanup

14.1 Sample Preparation and Extraction - Water Samples

A 100 mL aqueous sample is serially extracted using two 10 mL portions of hexane. Extractions are performed in 125 mL Erlenmeyer flasks with a magnetic stirring bar. One gram of NaCl is added to the aqueous sample 3 minutes after the first hexane extracting solvent is added. Extracts are combined, filtered, and dried through powdered anhydrous sodium sulfate, and concentrated to a 1 mL volume using the nitrogen blowdown procedure. Non-Aroclors extractables are removed from the extract with sulfuric acid, potassium permanganate, and florisil column clean-up procedures. Final extract volume is 1 mL.

14.1.1 Measure 100 mL of sample into a 125 mL Erlenmeyer flask.

14.1.2 Spike the sample with 10 μL of the SMC (2.0 ug/mL).

14.1.3 Add teflon stirring bar.

14.1.4 Add 10 mL of hexane.

14.1.5 Place the sample on magnetic stirring plate and stir for three minutes. The stirring rate should be sufficient to mix hexane throughout the sample.

14.1.6 Add 1 gram of NaCl to sample during stirring and stir for an additional 3 minutes.

14.1.7 Remove stir bar and allow aqueous and hexane layers to separate.

14.1.8 Transfer the hexane layer by pasteur pipet to a 25 mL concentrator tube.

14.1.9 Repeat steps 14.1.4 - 14.1.5 and 14.1.7 - 14.1.8. Combine extracts. Discard extracted aqueous sample.

14.1.10 Prepare a drying column by plugging the bottom of a funnel with glass wool and adding approximately 15 grams of powdered anhydrous sodium sulfate. Pour extract through funnel and collect in a 25 mL graduated concentrator tube. Rinse the extract container with minimal volumes of hexane and pour through the funnel. Rinse sodium sulfate twice with minimal volumes of hexane.

14.1.11 Concentrate extract to approximately 1 mL using the nitrogen-blowdown procedure in a 30°C water bath. To minimize analyte loss, occasionally rinse sides of concentrator tube with hexane during the blowdown procedure. Do not let extract go dry during concentration.

14.1.12 Proceed to extract clean-up step (paragraph 14.3).

14.2 Sample Preparation and Extraction - Soil/Solid Samples

A 6 gram sample of soil is mixed with powdered anhydrous sodium sulfate and is serially extracted with a 20 mL and a 10 mL portion of hexane/acetone (50:50) using an ultrasonic probe. Extracts are combined, filtered, and dried through powdered anhydrous sodium sulfate, and concentrated with solvent exchange into hexane to a 1 mL volume using the nitrogen blowdown procedure. Non-Aroclors extractables are removed from the extract with sulfuric acid, potassium permanganate, and florisil column clean-up procedures. Final extract volume is 1 mL.

14.2.1 Decant and discard any water layer on a soil/solid sample. Mix samples thoroughly, especially composited samples. Discard any foreign objects such as sticks, leaves, and rocks.

14.2.2 Weigh approximately 6 grams of a representative sample to the nearest 0.1 g into a 150 mL beaker.

14.2.3 To the weighed sample add a sufficient amount of powdered anhydrous sodium sulfate to prepare a free flowing mass upon mixing. Mix well.

14.2.4 Spike the sample with 10 µL of the SMC (2.0 ug/mL), mix further.

14.2.5 Add 20 mL of hexane/acetone (50:50)

14.2.6 Sonicate at microtip maximum power; cool the sample during sonication. The sonicator must be set for 50 percent pulse action. Sonicate for 3 minutes. The power output may have to be adjusted to ensure that the sample extract does not splash excessively; any significant loss of sample during sonication is not acceptable. Rinse the sonicator tip after each sample extraction with 1 mL of hexane/acetone (50:50). This rinse liquid shall be combined with the sample extract.

14.2.7 Remove and collect solvent layer in a 40 mL centrifuge tube.

14.2.8 Add 10 mL of hexane/acetone (50:50) and repeat steps 14.2.6 and 14.2.7.

14.2.9 Combine extracts and filter by gravity or vacuum filtration. Complete filtration by transferring entire sample contents to funnel and rinse with an additional 10 mL hexane/acetone (50:50).

14.2.9.1 For gravity filtration, prepare a filtration/drying bed with Whatman #42 filter paper filled with approximately 15 grams of powdered anhydrous sodium sulfate in a 6 cm powder funnel. Rinse sodium sulfate and filterpaper with hexane/acetone (50:50) and discard rinsate. With the filter and sodium sulfate wetted, decant combined extracts through the packed funnel and collect in a 40 mL centrifuge tube. Rinse the extract container with minimal volumes of hexane/acetone (50:50) and pour through the funnel. Rinse filter/sodium sulfate with 10 mL of hexane/acetone (50:50).

14.2.9.2 For vacuum filtration use Whatman #42 filter paper in a Buchner funnel. Pre-wet the paper with the hexane/acetone (50:50) solvent and discard rinsate. Transfer combined extracts into funnel, apply vacuum, and collect filtrate. Rinse filter with an 10 mL of hexane/acetone (50:50). Pour filtered extract through a powder funnel plugged with glass wool and filled with powdered anhydrous sodium sulfate and collect in a 40 mL centrifuge tube. Rinse the extract container with minimal volumes of hexane/acetone (50:50) and pour through the funnel. Rinse sodium sulfate with an additional 10 mL hexane/acetone (50:50).

14.2.10 Concentrate extract to approximately 25 mL using the nitrogen-blowdown procedure in a 30°C water bath. Transfer extract concentrate to a 25 mL concentrator tube and concentrate further to approximately 0.5 mL. Add 5 mL of hexane to concentrator tube and mix vigorously. Reconcentrate to approximately 1 mL. To minimize analyte loss, occasionally rinse sides of centrifuge and concentrator tubes with hexane during the blowdown procedure. Do not allow extract to go dry during concentration.

14.2.11 Proceed to extract clean-up step (paragraph 14.3).

14.3 Sulfuric Acid Cleanup

14.3.1 Using a syringe or a volumetric pipet, transfer the hexane solution to a 20-mL vial and carefully add 5 mL of the concentrated sulfuric acid in a fume hood.

14.3.2 **CAUTION:** Make sure that there is no exothermic reaction nor evolution of gas before proceeding.

14.3.3 Cap the vial tightly and vortex for one minute. A vortex must be visible in the vial.

14.3.4 **CAUTION:** Stop vortexing immediately if the vial leaks. **AVOID SKIN CONTACT; SULFURIC ACID BURNS.**

14.3.5 Allow the phases to separate for at least 1 minute. Examine the top (hexane) layer; it should not be highly colored nor should it have a visible emulsion or cloudiness.

14.3.6 If a clean phase separation is achieved, proceed to step 14.3.9.

14.3.7 If the hexane layer is colored or the emulsion persists for several minutes, remove the sulfuric acid layer from the vial and dispose of it properly. Add another 5 mL of the clean concentrated sulfuric acid.

NOTE: Do not remove any hexane at this stage of the procedure.

14.3.8 Vortex the sample and allow the phases to separate.

14.3.9 Transfer the hexane layer to a clean 20-mL vial.

14.3.10 Add an additional 1 mL of hexane to the sulfuric acid layer, cap and shake. This second extraction is done to ensure quantitative transfer of the Aroclors and Toxaphene.

14.3.11 Remove the second hexane layer and combine with the hexane from step 14.3.9.

14.3.12 Add 1 mL of reagent water to the combined hexane extracts to remove excess sulfuric acid that may still be present.

14.3.13 Vortex and allow the phases to separate.

14.3.14 Transfer the hexane layer to a clean 20-mL vial.

14.3.15 If a water layer is evident in the eluate, remove by the addition of sodium sulfate as follows: (Note: water injected into the GC may strip the analytical column phase and may cause retention time shifts.)

14.3.15.1 Add 5 g Na_2SO_4 to the eluate.

14.3.15.2 Decant the eluate and quantitatively recover the Aroclors by adding additional hexane to the Na_2SO_4. Combine this hexane with the eluate.

14.3.16 Continue with the potassium permanganate (paragraph 14.4) and florisil (paragraph 14.5) cleanups as described below if the sample is heavily contaminated. If the sample is not heavily contaminated, the potassium permanganate cleanup may not be necessary and the laboratory may skip paragraph 14.4 and shall continue with the florisil cleanup (paragraph 14.5).

14.4 Potassium Permanganate Cleanup

14.4.1 Add 5 mL of the 5 percent aqueous potassium permanganate solution to the combined hexane fractions from step 14.3.14.

14.4.2 **CAUTION:** Make sure that there is no exothermic reaction nor evolution of gas prior to proceeding.

14.4.3 Cap the vial tightly and vortex for 1 minute. A vortex must be visible in the vial.

14.4.4 **CAUTION:** Stop the vortexing immediately if the vial leaks. **AVOID SKIN CONTACT; POTASSIUM PERMANGANATE BURNS.**

14.4.5 Allow the phases to separate for at least 1 minute. Examine the top (hexane) layer, it should not be highly colored nor should it have a visible emulsion or cloudiness.

14.4.6 If a clean phase separation is achieved proceed to step 14.4.9.

14.4.7 If the hexane layer is colored or the emulsion persists for several minutes, remove the permanganate solution from the vial with a glass pipet and dispose of it properly. Add another 5 mL of clean aqueous permanganate solution.

NOTE: Do not remove any hexane at this stage of the procedure.

14.4.8 Vortex the sample and allow the phases to separate.

14.4.9 Transfer the hexane layer to a clean 20-mL vial.

14.4.10 Add an additional 1 mL of hexane to the permanganate layer, cap the vial securely and shake. This second extraction is done to ensure quantitative transfer of the Aroclors and Toxaphene.

14.4.11 Remove the second hexane layer and combine with the hexane from step 14.4.9.

14.5 Florisil Cartridge Procedure

14.5.1 Reduce the volume of the combined hexane layers to 1.0 mL under a stream of dry nitrogen.

14.5.2 Attach the Vac Elute vacuum manifold to a water aspirator or vacuum pump with a trap installed between the manifold on the vacuum source. Adjust the vacuum pressure in the manifold to between 5 and 10 pounds of vacuum.

14.5.3 Place one Florisil cartridge into the vacuum manifold for each sample extract.

14.5.4 Prior to cleanup of samples, the cartridge must be washed with hexane. This is accomplished by placing the cartridge in the vacuum manifold pulling a vacuum and passing 5 mL of the hexane solution through the cartridge. While the cartridges are being washed, adjust the vacuum applied to each cartridge so that it is approximately equal. **DO NOT ALLOW THE CARTRIDGES TO GO DRY AFTER THEY HAVE BEEN WASHED.**

14.5.5 After the cartridges in the manifold are washed the vacuum is released and a rack containing labeled 10 mL volumetric flasks is placed inside the manifold. Care must be taken to ensure that the solvent guide from each cartridge is placed inside of the appropriate volumetric flask as the manifold top is replaced and that the sorbent beds do not go dry after they have been conditioned.

14.5.6 After the volumetric flasks are in place, vacuum to the manifold is restored and the extract for each field and QC sample solution is transferred to the top frit of the appropriate Florisil cartridge.

14.5.7 The PCBs in the extract concentrates are then eluted through the column with 9 mL of hexane and collected into the 10 mL volumetric flasks held in the rack inside of the vacuum manifold.

14.5.8 Transfer the eluate in each volumetric flask to a clean centrifuge tube or 10 mL vial. Use two additional 1 mL hexane rinses of the flask to ensure quantitative transfer of the cartridge eluate.

14.5.9 Concentrate the solution to a 1.0 mL volume using either nitrogen blowdown or micro-Snyder column. Measure the final volume with a clean syringe or by transferring the extract to a clean volumetric flask.

14.5.10 If crystals of sulfur are evident or the presence of sulfur is suspected, proceed to paragraph 14.6. Sample analyses showing the presence of sulfur are not acceptable and must be reanalyzed after sulfur removal.

14.5.11 If sulfur is not expected to be a problem, transfer the 1.0 mL of sample to a GC vial and label the vial. The extract is ready for GC/ECD analysis; proceed to paragraph 18. Store the extracts at 4°C (± 2°C) in the dark until analyses are performed.

14.6 Sulfur Removal

14.6.1 Bright (unoxidized) granular copper is used to remove sulfur contamination. Add one to three granules of copper to each hexane extract in a clean vial. Tighten the top on the vial and shake for 30 seconds. Filter or centrifuge and then decant the solution to remove all solid precipitates. If copper appears bright, go to paragraph 18. If copper changes color, repeat sulfur removal as necessary.

14.6.2 If only a partial set of the samples in the Batch require sulfur cleanup, an additional reagent blank of hexane spiked with the appropriate amount of the SMC solution and cleaned with the copper is required.

14.6.3 Proceed to paragraph 18 for GC/ECD analysis.

15 Solid Phase Extraction and Cleanup of Water Samples

Solid Phase Extraction using nonpolar C_8 (or equivalent) or C_{18} disks may be used to extract water samples (Note: an alternative phase may be used if the new phase can be demonstrated to meet the QA/QC requirements of this method.) An additional filter disk is required when water samples contain particulates. Upon opening a package of disks, they shall be used immediately or stored in a desiccator (over Drierite, or equivalent). **For reproducible extraction efficiencies, all directions given below shall be followed as closely as possible.** Note: The laboratory shall not use SPE for non-aqueous samples.

15.1 Sample Filtration

All water samples shall be filtered. When disk extractions are performed the filtration step may be combined with the extraction by placing a filter disk designed to fit inside the neck of the sample reservoir and proceeding with the water sample cleanup and extraction as specified in paragraphs 15.2 - 15.5.

15.2 Sample Preparation - Water Samples

NOTE: The Aroclors water CRQLs are the same as the solvent extracted sample CRQLs as stated in Exhibit C.

15.2.1 Pour 100 mL of water sample into a clean erlenmeyer flask, fleaker beaker, separatory funnel, or any other suitable mixing chamber.

15.2.2 Adjust the pH of the sample to 5.0 - 7.0 using 0.5 N sodium hydroxide or 0.5 N sulfuric acid.

15.2.3 Spike the sample with 10 μL of the SMC (2.0 μg/mL).

15.2.4 Add 5 mL of methanol to the water sample.

15.2.5 Shake sample vigorously to mix thoroughly.

15.2.6 Proceed with sample cleanup and extraction utilizing SPE disk procedures (paragraphs 15.3 - 15.5).

15.3 Disk Set-up and Conditioning

15.3.1 Place the disk onto the frit on the vacuum head, place the reservoir on top of the head and clip together.

15.3.2 When filtration is required, a filtration disk or 500 mg of Celite will be placed on top of the extraction disk.

15.3.3 Turn vacuum pump on and set pump vacuum to 10 inches of mercury. Do not exceed the manufacturer's recommendation for manifold vacuum. Flow rates can be controlled by opening and closing vacuum manifold valves or pinch clamps.

15.3.4 Wash each disk with four 5 mL aliquots of hexane. **SLOWLY** open vacuum valves to allow the hexane to pass through the disk after each wash.

15.3.5 Wash each disk with four 5 mL aliquots of methanol (MeOH). Let disks drain after each wash. Do not allow the disks to drain dry between washes.

15.3.6 Wash the disks with two 5 mL aliquots of methanol/water (5:100). Allow the first 5 mL portion to wash through; however, do not allow the disk to drain dry. Next wash the last 5 mL portion through, keeping the disk wet. Each disk must remain moist until the entire sample volume is extracted. **DURING CONDITIONING, DO NOT ALLOW DISKS TO DRY. THIS STEP IS CRITICAL FOR GOOD RECOVERIES.**

15.4 Compound Extraction Using Disks

15.4.1 Swirl the sample (from paragraph 15.2) for 20 seconds and carefully decant the sample into the sample reservoir.

15.4.2 Open manifold valves to allow samples to pass through the disks at approximately 3-8 mL/min. The flow rate must not exceed 10 mL/min. If the flow rate slows because of particulate buildup on the disk or filter, increase the vacuum to maintain 3-8 mL/min. flow.

NOTE: It must take at least ten minutes for the sample to pass through the disk.

15.4.3 Rinse the sample container with 5-10 mL of methanol/water (5:100) into the sample reservoir to transfer any remaining compounds.

15.4.4 When the entire sample volume has passed through the disks (approximately 15 minutes), rinse the sample reservoir with an additional 5-10 mL methanol/water (5:100) into the disks.

15.4.5 Wash the disks with an additional 5 mL methanol/water (5:100), continue to apply vacuum until the top of the disk is dry. Turn off vacuum.

15.4.6 Wipe the reservoir dry with clean lab tissues (Kimwipes, or equivalent).

15.5 Compound Elution using Disks

15.5.1 Release the vacuum on each filtration device, dispose of the water eluate in the large receiver. **DO NOT UNCLIP THE RESERVOIR FROM THE VACUUM HEAD.**

15.5.2 Place a clean solvent receiver over the drip tip of the vacuum head.

15.5.3 Add 5 mL hexane to each disk. If additional filtration media were used, allow the hexane to stand in the reservoir for 2 minutes prior to applying vacuum.

15.5.4 Turn vacuum pump on. Adjust pump pressure to 5 inches of mercury.

15.5.5 **SLOWLY** open the manifold valves to allow hexane to soak into the sorbent bed. **DO NOT ALLOW THE HEXANE TO ELUTE AT THIS TIME.** Close valves and allow disks to soak for 2 minutes.

15.5.6 After 2 minutes, slowly open the manifold valves and collect eluant into the receiver tube. **APPLICATION OF EXCESSIVE VACUUM WILL RESULT IN ANALYTE LOSS.**

15.5.7 Add a second volume of 5 mL hexane to each disk and elute under vacuum until the disk is dry.

15.5.8 Proceed with cleanup of the hexane extract as described in paragraphs 15.6 to 15.9.

15.6 Sulfuric Acid Cleanup

15.6.1 Using a syringe or a volumetric pipet, transfer the hexane solution to a 20-mL vial and carefully add 5 mL of the concentrated sulfuric acid in a fume hood.

15.6.2 **CAUTION:** Make sure that there is no exothermic reaction nor evolution of gas before proceeding.

15.6.3 Cap the vial tightly and vortex for one minute. A vortex must be visible in the vial.

15.6.4 **CAUTION:** Stop vortexing immediately if the vial leaks. **AVOID SKIN CONTACT; SULFURIC ACID BURNS.**

15.6.5 Allow the phases to separate for at least 1 minute. Examine the top (hexane) layer; it should not be highly colored nor should it have a visible emulsion or cloudiness.

15.6.6 If a clean phase separation is achieved, proceed to step 15.9.9.

15.6.7 If the hexane layer is colored or the emulsion persists for several minutes, remove the sulfuric acid layer from the vial and dispose of it properly. Add another 5 mL of the clean concentrated sulfuric acid.

NOTE: Do not remove any hexane at this stage of the procedure.

15.6.8 Vortex the sample and allow the phases to separate.

15.6.9 Transfer the hexane layer to a clean 20-mL vial.

15.6.10 Add an additional 1 mL of hexane to the sulfuric acid layer, cap and shake. This second extraction is done to ensure quantitative transfer of the Aroclors and Toxaphene.

15.6.11 Remove the second hexane layer and combine with the hexane from step 15.9.9.

15.6.12 Add 1 mL of reagent water to the combined hexane extracts to remove excess sulfuric acid that may still be present.

15.6.13 Vortex and allow the phases to separate.

15.6.14 Transfer the hexane layer to a clean 20-mL vial.

15.6.15 If a water layer is evident in the eluate, remove by the addition of sodium sulfate as follows: (Note: water injected into the GC may strip the analytical column phase and may cause retention time shifts.)

15.6.15.1 Add 5 g Na_2SO_4 to the eluate.

15.6.15.2 Decant the eluate and quantitatively recover the Aroclors by adding additional hexane to the Na_2SO_4. Combine this hexane with the eluate.

15.6.16 Continue with the potassium permanganate (paragraph 15.10) and florisil (paragraph 15.11) cleanups as described below if the sample is heavily contaminated. If the sample is not **heavily contaminated**, the potassium permanganate cleanup may not be necessary and the laboratory may skip paragraph 15.10 and shall continue with the florisil cleanup (paragraph 15.11).

15.7 Potassium Permanganate Cleanup

15.7.1 Add 5 mL of the 5 percent aqueous potassium permanganate solution to the combined hexane fractions from step 15.9.14.

15.7.2 **CAUTION:** Make sure that there is no exothermic reaction nor evolution of gas before proceeding.

15.7.3 Cap the vial tightly and vortex for 1 minute. A vortex must be visible in the vial.

15.7.4 **CAUTION:** Stop the vortexing immediately if the vial leaks. **AVOID SKIN CONTACT; POTASSIUM PERMANGANATE BURNS.**

15.7.5 Allow the phases to separate for at least 1 minute. Examine the top (hexane) layer, it should not be highly colored nor should it have a visible emulsion or cloudiness.

15.7.6 If a clean phase separation is achieved proceed to step 15.10.9.

15.7.7 If the hexane layer is colored or the emulsion persists for several minutes, remove the permanganate solution from the vial with a glass pipet and dispose of it properly. Add another 5 mL of clean aqueous permanganate solution.

NOTE: Do not remove any hexane at this stage of the procedure.

15.7.8 Vortex the sample and allow the phases to separate.

15.7.9 Transfer the hexane layer to a clean 20-mL vial.

15.7.10 Add an additional 1 mL of hexane to the permanganate layer, cap the vial securely and shake. This second extraction is done to ensure quantitative transfer of the Aroclors and Toxaphene.

15.7.11 Remove the second hexane layer and combine with the hexane from step 15.10.9.

15.8 Florisil Cartridge Procedure

15.8.1 Reduce the volume of the combined hexane layers to 1.0 mL under a stream of dry nitrogen.

15.8.2 Attach the Vac Elute vacuum manifold to a water aspirator or vacuum pump with a trap installed between the manifold on the vacuum source. Adjust the vacuum pressure in the manifold to between 5 and 10 pounds of vacuum.

15.8.3 Place one Florisil cartridge into the vacuum manifold for each sample extract.

15.8.4 Prior to cleanup of samples, the cartridge must be washed with hexane. This is accomplished by placing the cartridge in the vacuum manifold pulling a vacuum and passing 5 mL of the hexane solution through the cartridge. While the cartridges are being washed, adjust the vacuum applied to each cartridge so that it is approximately equal. **DO NOT ALLOW THE CARTRIDGES TO GO DRY AFTER THEY HAVE BEEN WASHED.**

15.8.5 After the cartridges in the manifold are washed the vacuum is released and a rack containing labeled 10 mL volumetric flasks is placed inside the manifold. Care must be taken to ensure that the solvent guide from each cartridge is placed inside of the appropriate volumetric flask as the manifold top is replaced and that the sorbent beds do not go dry after they have been conditioned.

15.8.6 After the volumetric flasks are in place, vacuum to the manifold is restored and the extract for each field and QC sample solution is transferred to the top frit of the appropriate Florisil cartridge.

15.8.7 The PCBs in the extract concentrates are then eluted through the column with 9 mL of hexane and collected into the 10 mL volumetric flasks held in the rack inside of the vacuum manifold.

15.8.8 Transfer the eluate in each volumetric flask to a clean centrifuge tube or 10 mL vial. Use two additional 1 mL hexane rinses of the flask to ensure quantitative transfer of the cartridge eluate.

15.8.9 Concentrate the solution to a 1.0 mL volume using either nitrogen blowdown or micro-Snyder column. Measure the final

volume with a clean syringe or by transferring the extract to a clean volumetric flask.

15.8.10 If crystals of sulfur are evident or the presence of sulfur is suspected, proceed to paragraph 15.12. Sample analyses showing the presence of sulfur are not acceptable and must be reanalyzed after sulfur removal.

15.8.11 If sulfur is not expected to be a problem, transfer the 1.0 mL of sample to a GC vial and label the vial. The extract is ready for GC/ECD analysis; proceed to paragraph 18. Store the extracts at 4°C (± 2°C) in the dark until analyses are performed.

15.9 Sulfur Removal

15.9.1 Bright (unoxidized) granular copper is used to remove sulfur contamination. Add one to three granules of copper to each hexane extract in a clean vial. Tighten the top on the vial and shake for 30 seconds. Filter or centrifuge and then decant the solution to remove all solid precipitates. If copper appears bright, go to paragraph 18. If copper changes color, repeat sulfur removal as necessary.

15.9.2 If only a partial set of the samples in the Batch require sulfur cleanup, an additional reagent blank of hexane spiked with the appropriate amount of the SMC solution and cleaned with the copper is required.

15.9.3 Proceed to paragraph 18 for GC/ECD analysis.

16 <u>Sample Preparation and Extraction - Oil Samples</u>

NOTE: The Aroclors target compound CRQL for oil samples is 2000 µg/kg for 1221; 5000 µg/kg for toxaphene; and 1000 µg/kg for the other Aroclors.

16.1 Add 1.0 g of sample to a 10 mL volumetric flask. (Oily mixtures should be phase-separated according to the procedures in paragraph 13 of the SOW).

16.2 Add 1.0 mL of SMC (0.2 µg/mL) to the sample.

16.3 Add hexane to the volumetric flask until reaching the 10 mL meniscus mark.

16.4 Cap with stopper and mix for one minute.

16.5 Pipet exactly 1.0 mL out and proceed with clean-up and final concentration as specified in paragraphs 14.3 - 14.6.

17 Sample Preparation and Extraction - Wipe Samples

A wipe sample containing PCBs is serially extracted with two portions of hexane using an ultrasonic probe. Extracts are combined, filtered, and dried through powdered anhydrous sodium sulfate, and concentrated to a 1 mL volume using the nitrogen blowdown procedure.

NOTE: The target compound CRQLs for wipe samples will be specified by the Agency.

17.1 Pour off any free solvent from the sample jar into a clean Erlenmeyer flask of appropriate size.

17.2 Spike the sample with 10 uL of the SMC (2.0 ug/mL).

17.3 Add enough clean hexane to the sample jar to cover the wipe sample.

17.3.1 If the shape of the sample jar is not amenable to sonication, quantitatively transfer the sample to an appropriate container. Rinse the sample jar with 5-10 mL of hexane and transfer to the new sample container.

17.4 Sonicate at microtip maximum power; cool the sample during sonication. The sonicator must be set for 50 percent pulse action. Sonicate for 3 minutes. The power output may have to be adjusted to ensure that the sample extract does not splash excessively; any significant loss of sample during sonication is not acceptable. Rinse the sonicator tip after each sample extraction with 1 mL of hexane.

17.5 Remove the hexane layer from the sonication and combine it with the hexane in the Erlenmeyer flask.

17.6 Repeat steps 17.3 - 17.5.

17.7 Filter the combined extracts by gravity filtration.

17.7.1 Prepare a filtration/drying bed with Whatman #42 filter paper filled with approximately 15 grams of powdered anhydrous sodium sulfate in a 6 cm powder funnel. Rinse the sodium sulfate and filter paper with hexane and discard rinsate. With the filter and sodium sulfate wetted, decant combined extracts through the packed funnel and collect in a clean concentrator tube. Rinse the Erlenmeyer flask with 10 mL hexane, and transfer rinse solvent to powder funnel. Rinse powder funnel with 10 mL hexane.

17.8 Concentrate extract to approximately 20 mL using the nitrogen blowdown procedure in a 30°C water bath. Transfer extract concentrate to a clean 25 or 30 mL concentrator tube, and rinse concentrator tube (from paragraph 17.7.1) with 5 mL hexane. Transfer the rinse solvent to the

25 or 30 mL concentrator tube, and concentrate further to approximately 1 mL. To minimize analyte loss due to volatility, occasionally rinse sides of centrifuge and concentrator tubes with hexane during the blowdown procedure.

17.9 Proceed to extract clean-up steps (paragraphs 14.3 - 14.6).

18 Instrumental Analysis

18.1 Set up the GC system per the requirements in paragraph 7.

18.1.1 Solvent-flush manual injection or automated sample injection is recommended for analysis.

18.1.2 An analytical sequence consists of field sample analyses and all associated standards, blanks, and QC analyses performed within a 24-hour period on one instrument. There are two (2) types of analytical sequences: an initial calibration analytical sequence and a daily calibration check analytical sequence. All samples shall be analyzed within one of these analytical sequences.

18.1.2.1 An initial calibration analytical sequence begins with a three-point calibration of Aroclor 1016/1260 followed by single-point analyses of the other Aroclors and toxaphene, an instrument blank, an LCS, and a method blank. The initial calibration analytical sequence is as follows:

- Initial Calibration (analysis of the high 1016/1260 standard proceeded by the mid and low 1016/1260 standards followed by single-point analyses of the other Aroclors and toxaphene);
- Instrument Blank;
- Laboratory Control Sample(s);
- Method Blank(s);
- Field Sample(s);
- Instrument Blank(s); and
- Performance Verification Standard(s).

18.1.2.2 A daily calibration check analytical sequence begins with an instrument blank, a valid calibration check standard, a method blank, and

an LCS. The daily calibration analytical sequence is as follows:

- Instrument Blank;
- Calibration Check Standard (1016/1260);
- Method Blank(s);
- Laboratory Control Sample(s);
- Field Sample(s);
- Instrument Blank(s); and
- Performance Verification Standard(s).

18.1.3 If all acceptance criteria for these analyses are met, then the Laboratory may proceed with sample analyses.

18.1.4 All analytical sequences conclude with an acceptable instrument blank and a PVS analysis. The PVS shall be started within 24 hours after the injection of the first initial calibration standard or the first instrument blank in the daily calibration sequence. NOTE: If a PVS reanalysis is required because of a non-compliant initial PVS analysis, the PVS reanalysis must be started within 26 hours after the start of the current analytical sequence.

18.1.5 The method blank and all associated samples shall be analyzed in the same analytical sequence. If samples from a batch are analyzed in more than one analytical sequence, the associated method blank must also be analyzed in the same analytical sequence. If a method blank extract is used up because of multiple analyses, the Laboratory shall substitute an instrument blank in place of a method blank in all subsequent analytical sequences. The Laboratory shall note this in the Batch Narrative and shall use the EPA identification number as described in Exhibit B for this instrument blank.

18.1.6 The LCS shall be analyzed with all associated samples in the same analytical sequence. If samples from a batch are analyzed in more than one analytical sequence, the associated LCS shall be analyzed in the same analytical sequence. If an LCS extract is used up because of multiple analyses, the Laboratory shall dilute the LCS standard mixture (the original stock mix) and use this solution in place of the original LCS sample in all subsequent analytical sequences (see paragraph 27). The Laboratory

shall note this in the Batch Narrative and shall use the EPA identification number as described in Exhibit B for this LCS solution.

18.2 Computer reproductions of chromatograms that are attenuated to ensure that all peaks are on scale over a 100-fold range are acceptable. However, post analysis attenuation shall be no greater than a 100-fold range. This is to reduce the potential for RTSs of quantitation peaks due to column overload and to ensure that the detector is operating within the calibration range. If any sample quantitation peaks exceed the calibration range (greater than the high concentration level of the 1016/1260 initial calibration), they shall be diluted according to paragraph 19.

18.3 If any saturated non-target compound chromatographic peaks are evident or if any chromatographic peaks overlap more than one RRT and/or RT target compound quantitation windows, the Laboratory shall use the "E,N" flags on Form QIA-PCB to indicate this situation.

18.3.1 If saturated chromatographic peaks outside target compound quantitation RRT and/or RT windows are evident, flag the nearest target compound "E,N" on Form QIA-PCB.

18.3.2 If chromatographic peaks overlapping more than one target compound quantitation RRT and/or RT windows are evident, flag the corresponding target compound quantitation peaks "E,N" on Form QIA-PCB.

18.4 Chromatographic peak response of the quantitation peaks must be greater than 10 percent and less than 100 percent of full-scale deflection to ensure that individual quantitation peaks and Aroclor patterns will be visible during data review.

19 <u>Dilutions</u>

19.1 Samples with quantitation peaks larger than high level 1016/1260 initial calibration peaks must be reported with the "E" data flag as described in Exhibit B. Upon evaluation, the Region may require that the samples be diluted, reextracted, and/or reanalyzed in a valid analytical sequence as additional paid samples. Reextraction and/or reanalysis of samples can only be authorized by the CLASS contractor acting on behalf of the Regional TPO or Headquarters APO. The Laboratory shall perform the dilution analysis as specified below in paragraphs 19.2.2 and 19.2.3.

19.2 The Laboratory may dilute samples prior to initiating sample extraction/analysis. The resulting analysis of those samples must produce chromatograms with at least one Aroclor present at a concentration greater than five times the low level initial calibration standard. If no Aroclor is identified in the diluted sample at a

concentration that exceeds five times the concentration of the low level initial calibration standard, then the undiluted sample shall be reextracted and/or reanalyzed at no additional cost to the Agency.

19.2.1 At the request of the Region, sample dilution may be required prior to the initial extraction and analysis. If no Aroclors are detected in the diluted sample above five times the concentration of the low initial calibration standard, then the undiluted sample shall be reextracted and reanalyzed as an additional paid sample.

19.2.2 Dilutions - Solvent extracted, oil, and wipe samples

19.2.2.1 Dilutions of solvent extracted, oil, and wipe samples shall be made by using an appropriate aliquot of the extract diluted in hexane. After making a dilution, add sufficient SMC solution to bring up to proper concentration (20 ng/mL).

19.2.3 Dilutions - SPE extracted samples

19.2.3.1 Dilutions of water samples shall be made by using an appropriate aliquot of sample diluted to 100 mL with methanol/water (5:100) (see paragraph 15.2). Continue with sample extraction and cleanup as described in paragraph 15.

NOTE: Dilute samples prior to the addition of the SMC.

19.2.4 Sample dilutions shall be analyzed in a valid analytical sequence which includes the associated method blank and LCS.

19.2.5 If sample reextractions and reanalyses are required, the laboratory shall also reextract and reanalyze an associated method blank and LCS.

20 Identification of Aroclors

20.1 The analyst shall consider the Aroclor pattern in addition to specific quantitation peaks. The choice of the peaks used to identify and quantitate Aroclors may be complicated by the environmental alteration of the pattern and by the presence of co-eluting compounds or matrix interferences. The more highly chlorinated components of Aroclors are more stable in the environment. Therefore, the analyst should emphasize the later eluting peaks of a pattern in identifying weathered Aroclors.

20.2 Retention Time Standard - The SMC shall be used as the RT marker for compound identification. The SMC shall also be used to monitor extraction efficiency.

20.2.1 The SMC shall be added to all field and QC samples prior to extraction.

20.2.2 In each analysis, the SMC RT must be within ± 1.0 percent of the mean RT of the SMC calculated from the 1016/1260 initial calibration standards.

20.3 Aroclor identification when SMC recovery is greater than or equal to 10 percent and less than or equal to 200 percent.

20.3.1 Quantitation peaks shall be identified on the basis of RRT in all field samples for which the SMC recovery is greater than or equal to 10 percent and less than or equal to 200 percent.

20.3.2 Peaks in sample chromatograms shall be identified as quantitation peaks if their RRT is within ± 0.005 RRT units of the RRT established from the low calibration standard during the initial calibration.

20.4 Aroclor identification when SMC recovery is less than 10 percent, greater than 200 percent, or if peak interferences are present.

20.4.1 Quantitation peaks shall be identified on the basis of absolute RT in all field samples for which the SMC recovery is less than 10 percent, greater than 200 percent, or if peak interferences are present.

20.4.2 Peaks in sample chromatograms shall be identified as quantitation peaks if their absolute RT is within ± 1.0 percent of the RT established from the low calibration standard during the initial calibration.

20.4.3 Any Aroclor identified on the basis of absolute RT shall be flagged with the qualifier "T" (See Exhibit B).

20.4.4 If the recovery of the SMC is less than 10 percent, greater than 200 percent, or if peak interferences are present for a sample, acceptable recovery of the SMC must be obtained in the associated method blank and LCS (see paragraphs 25 and 27).

20.5 If multiple peaks are within the identification windows (target compound and SMC), the Laboratory shall use professional judgement to properly identify the appropriate peak. The Laboratory should consider the inherent matrix effects of the sample on peak shifting, masking, and

overlaps when making identification determinations. The Laboratory should take into consideration the mean RT and RRT from the initial calibration, RT and RRT from the calibration check standard, and the SMC RT from relatively clean samples analyzed before and after the sample in question as a basis for selecting the most appropriate peak. The Laboratory shall describe in the Batch Narrative the rationale used for choosing a particular peak (e.g., chose peak closest to the RT of the peak in calibration check standard) as the target compound or SMC and how the field sample matrix may have affected peak identification.

21 Calculations

21.1 Calculate the RRT of a sample component or a standard using the following equation:

$$RRT = \frac{RT_{component}}{RT_{SMC}} \qquad \text{EQ. D.11}$$

Where:

RRT = relative retention time

$RT_{component}$ = retention time of the target compound

RT_{SMC} = retention time of the SMC

21.2 Samples will be quantitated using the calibration factors determined from the low concentration Aroclors standards from the initial calibrations. (NOTE: The SMC concentration shall be calculated using the mean SMC calibration factor calculated from the 1016/1260 initial calibration standards).

21.3 Quantitation of PCBs as Aroclors

21.3.1 The concentration of an Aroclor in a sample is calculated by averaging the concentrations of the individual quantitation peaks. The response of each peak can be measured by either peak height or integrated peak area measurements. Because the quantitation peaks are not specified by the method, it is required that all analyses be performed by an experienced PCB analyst who shall select major peaks in the Aroclor pattern. The concentration of Aroclors based on individual quantitation peaks is calculated with the following equation for the external standards.

21.3.2 If more than one multicomponent compound is observed in a sample, the Contractor shall choose separate congener peaks to quantitate the different multicomponent compounds. A

peak common to both compounds present in the sample must not be used to quantitate both compounds.

21.3.3 Water

$$Concentration\ (\mu g/L) = \frac{(A_x)\ (V_t)}{(CF_m)\ (V_i)\ (V_s)} \qquad \text{EQ. D.12}$$

where:

A_x = response for the peak to be measured

CF_m = calibration factor of quantitation peak established from the low concentration standards calculated during the initial calibration.

V_t = volume of total extract (µL) (take into account any dilutions).

V_i = volume of extract injected (µL)

V_s = volume of water extracted (mL)

21.3.4 Soil/Solid (Wet-weight basis) and Oil

$$Concentration\ (\mu g/kg) = \frac{(A_x)\ (V_t)}{(CF_m)\ (V_i)\ (W_s)} \qquad \text{EQ. D.13}$$

where:

A_x, CF_m, V_i = same as given in Equation D.12

V_t = volume of total extract (use 1000 µL or a factor of this when dilutions are made).

W_s = weight of sample extracted in g.

NOTE: For oil samples, divide W_s by 10. The factor of 10 for the W_s is necessary because only one-tenth of the hexane extract is processed and analyzed.

An average concentration of the three to five quantitation peaks for the Aroclors is then determined using the following equation:

$$Conc_{avg} = \sum_{i=1}^{N} \frac{X_i}{N} \qquad \text{EQ. D.14}$$

where:

$Conc_{avg}$ = mean concentration.

X_i = individual peak concentration.

N = number of peaks.

21.4 Calculate the SMC amount observed and amount (percent) recovered using equations as described in paragraph 10.4.

21.5 RTS shall be monitored using the SMC (paragraph 20.2). The RTS shall be measured for all analyses.

21.5.1 Calculate the retention time percent difference (RT %D) between the RT of the SMC in the field and QC samples or subsequent standards analyzed and the mean SMC RT from the most recent 1016/1260 initial calibration standards using the following equation:

$$RT\ \%D = \frac{RT_c - RT_s}{RT_c} \times 100 \qquad \text{EQ. D.15}$$

where:

RT %D = retention time percent difference.

RT_s = retention time of the SMC in a field and QC sample or subsequent standard.

RT_c = mean retention time of the SMC from the most recent initial calibration (mean RT of the 1016/1260 SMCs analyzed during the initial calibration).

22 Technical Acceptance Criteria

22.1 Each sample within a Batch shall be analyzed on a GC system meeting the initial calibration or valid calibration check standard technical acceptance criteria (paragraphs 8 and 9).

22.2 Each sample within a Batch shall be analyzed after an acceptable method and instrument blank, (paragraphs 25 and 26) and after an acceptable LCS (paragraph 27) is analyzed.

22.3 Each sample within a Batch shall be run within a valid initial calibration or daily calibration check analytical sequence that concludes with an acceptable instrument blank (paragraph 26) and an acceptable PVS (paragraph 10).

22.4 Each sample within a Batch shall be analyzed and results reported within the contract required turnaround times.

22.5 Each sample matrix within a Batch shall have an acceptable method blank analyzed during the same analytical sequence.

22.6 The RTS for the SMC RT must be within ± 1.0 percent between any sample in a Batch and the mean RT of the SMC calculated from the 1016/1260 standards analyzed during the initial calibration. The RTS is not evaluated if the SMC is not recovered or if peak interferences are present.

22.7 The advisory recovery limit for the SMC is 50-150 percent. Reanalyses of field samples are not made if the SMC recovery is outside the recovery limts.

22.8 The SMC recovery must be greater than or equal to 10 percent and less than or equal to 200 percent in order to use RRT for identification purposes. The identification window is ± 0.005 unit of the RRT for each quantitation peak in the low concentration standard analyzed during the initial calibration. If the recovery of the SMC is less than 10 percent, greater than 200 percent, or if peak interferences are present (but is adequately recovered in the method blank), the absolute RT of the compounds shall be used for identification purposes. The identification window is ± 1.0 percent of the absolute RT for each quantitation peak in the low concentration standard analyzed during the initial calibration.

23 Corrective Action

23.1 Flag all sample results "S" if the SMC is outside the advisory recovery limits of 50-150 percent.

23.2 Flag all sample results "T" if the absolute RTs are used for identifications.

23.3 An SMC recovery of less than 20 percent in the method blank or LCS associated with a sample Batch is an indication that serious problems may have occurred during the extraction process. Corrective action shall be performed and the unacceptable method blank and/or LCS and all samples associated with the unacceptable method blank and/or LCS shall be reextracted and reanalyzed at no additional expense to the Agency.

23.4 If the SMC RTS criterion is not met for any field sample, sample analysis shall be stopped and the noncompliant sample rerun. If the RTS criterion is still out upon reanalysis analyze an instrument blank. If the instrument blank SMC RTS is outside the criterion, perform corrective action which may include a new initial calibration. DO NOT continue with sample analyses until the RTS is within ± 1.0 percent. If the instrument blank SMC RTS meets the criterion, sample analysis may continue. The Laboratory shall report both sets of noncompliant sample data and flag the results "M". Note: The RTS is not evaluated if the SMC is not recovered or if peak interferences are present.

23.5 All Aroclor concentrations which exceed the upper limit of the initial calibration range will be flagged "E" (see Exhibit B).

NOTE: Unless otherwise stated in Exhibit D, all sample data from the initial analysis shall be reported to the appropriate Region. Samples not meeting any one of the contract technical acceptance criteria and not requiring automatic reextraction and/or reanalysis shall be flagged by the Laboratory. The Region will evaluate the noncompliant samples and may specify that these be reanalyzed as additional paid samples.

24 <u>Documentation</u>

Sample results shall be reported on Forms QIA-PCB, QIB-PCB, and QVI-PCB. Reporting requirements are listed in Exhibit B.

SECTION V

SAMPLE QUALITY CONTROL PROCEDURES AND REQUIREMENTS

25 Method Blank Analysis

25.1 Summary - A method blank for water samples is 100 mL of reagent water spiked with the SMC and carried through the entire analytical scheme. A method blank for soil/solid samples is 6 g of clean quartz sand spiked with the SMC and carried through the entire analytical scheme. A method blank for oil samples is 1 g of clean corn oil spiked with the SMC and carried through the entire analytical scheme. Method blanks shall be carried through the entire analytical procedure.

NOTE: The Agency will provide the Laboratory with further instructions for the analysis of method blanks for wipe samples.

25.2 Frequency

A method blank analysis shall be performed for each matrix type (water, soil/solid, or oil) and with each set of samples. A set of samples is defined as those samples from one Batch that are extracted and analyzed on one instrument during a 24-hour analytical sequence.

25.2.1 The method blank and all associated samples shall be analyzed in the same analytical sequence. If samples from a batch are analyzed in more than one analytical sequence, the associated method blank must also be analyzed in the same analytical sequence. If a method blank extract is used up because of multiple analyses, the Laboratory shall substitute an instrument blank in place of a method blank in all subsequent analytical sequences. The Laboratory shall note this in the Batch Narrative and shall use the EPA identification number as described in Exhibit B for this instrument blank.

25.2.2 An acceptable method blank shall be analyzed before running any samples within an analytical sequence.

25.2.3 When analyzing highly contaminated samples using SPE disks on more than one manifold, the Laboratory should analyze one method blank per extraction manifold. If an unacceptable method blank is analyzed and the contamination can be isolated to a particular manifold, only samples extracted on that manifold will have to be reextracted. If an unacceptable method blank is analyzed, and only one method blank is used, all samples from all manifolds shall be reextracted.

25.2.4 Criteria for an acceptable method blank is defined in section 25.4.

25.2.5 If all field samples in a Batch are filtered, the associated method blank shall also be filtered. If only a partial set of samples in a Batch are filtered, then a separate method blank shall be run through the filter, extracted, and analyzed.

25.3 Procedure for Method Blank Preparation

25.3.1 Prepare the method blanks at the frequency listed in section 25.2.

25.3.2 Measure out 100 mL of reagent water for each water method blank sample aliquot.

25.3.3 Soil/solid method blanks are 6 g of clean quartz sand.

25.3.4 Prepare water and soil/solid method blanks as described in section 14 <u>or</u> 15 depending on whether solvent or solid phase extraction is utilized.

25.3.5 Spike 1.0 g of corn oil with 1.0 mL of SMC (0.2 μg/mL) and proceed with the Aroclors procedure (sections 16.3 - 16.5).

25.3.6 Analyze the method blank extracts. Calculate the results according to section 21.

25.4 Technical Acceptance Criteria

25.4.1 All method blanks shall be analyzed within an acceptable analytical sequence on a GC system meeting the initial calibration (section 8) or valid calibration check standard (section 9) criteria, and the PVS acceptance criteria (section 10).

25.4.2 The SMC RT in the method blank must be within ± 1.0 percent of the mean SMC RT calculated from the 1016/1260 initial calibration standards.

25.4.3 The SMC recovery criterion of 50-150 percent is advisory only. The SMC recovery in the method blank must be greater than or equal to 20 percent and less than or equal to 200 percent.

25.4.4 Quantitation peaks or potential interferences in the method blanks must have a response less than one-half the response in the corresponding RRT window of the initial calibration low concentration standard.

25.4.5 A method blank may contain a detectable but acceptable concentration of a target compound, quantitation peaks, or interferences (less than one-half the response of the initial calibration low concentration standard).

25.4.6 If all criteria are satisfied, the method blank analysis is acceptable and samples may be analyzed. If the method blank is unacceptable, corrective action shall be taken and an acceptable method blank must be analyzed prior to analyzing the associated samples.

25.5 Corrective Action

25.5.1 If a method blank does not meet the technical acceptance criteria, the Contractor shall consider the analytical system to be out of control. It is the Contractor's responsibility to eliminate method interferences caused by contaminants in solvents, reagents, cartridges, disks, glassware, and other sample storage and processing hardware that lead to discrete artifacts and/or elevated baselines in gas chromatograms. If contamination is a problem, the Contractor shall investigate the source of the contamination, and appropriate corrective measures shall be taken and documented before further sample analysis proceeds.

25.5.2 If a compound is found in the method blank (less than one-half the response in the corresponding RRT window of the initial calibration low concentration standard) and is also detected in an associated field sample at less than the CRQL, the compound shall be reported as a nondetect, i.e., with a "U" flag.

25.5.3 If the SMC recovery in the method blank is less than 20 percent, greater than 200 percent, or if peak interferences are present, the method blank shall be immediately rerun. If on reanalysis the method blank SMC recovery is still outside the recovery limits, the method blank and all associated samples shall be reextracted and reanalyzed at no additional cost to the Agency.

25.5.4 Flag all method blank results "S" if the SMC does not meet the advisory recovery criterion of 50-150 percent.

25.5.5 If the RTS criterion is not met for a method blank, sample analyses shall be stopped and the noncompliant blank rerun. If the RTS criterion is still out on reanalysis, perform corrective action which may include a new initial calibration. DO NOT continue with sample analyses until the RTS is within ± 1.0 percent.

25.5.6 Any samples processed with a method blank that is out of control (i.e., does not meet any of the technical acceptance criteria) shall be reextracted and/or reanalyzed at no additional expense to the Agency.

25.6 Documentation

Method blank results are reported on Forms QIA-PCB, QIB-PCB, and QVI-PCB. Reporting requirements are listed in Exhibit B.

26 Instrument Blank Analysis

26.1 Summary

An instrument blank is 1 mL of hexane spiked with 10 µL of SMC (2.0 µg/mL). At least two acceptable instrument blanks shall be analyzed within an analytical sequence, one preceding sample analyses and one following sample analyses.

26.2 Frequency

An instrument blank shall be analyzed at least twice during the analytical sequence to ensure that the instrument is free from potential contaminants. The first instrument blank analysis shall be performed after the initial three-point calibration in the initial calibration analytical sequence or as the first analysis in a daily calibration check analytical sequence. The second instrument blank analysis shall be performed immediately before the PVS analysis. The Laboratory is encouraged to run additional instrument blanks during the analytical sequence, especially when highly contaminated or complex samples are analyzed. Instrument blanks must be analyzed after analysis of samples with high levels of target compounds or interferents (see section 26.5.6).

26.3 Procedure for Instrument Blank preparation

An instrument blank is 1 mL of hexane spiked with 10 µL of SMC (2.0 µg/mL).

26.4 Calculations

Concentrations of the SMC and any quantitation peak in the instrument blank are calculated according to the procedures described in section 21. Note: The target compound concentrations (detected concentrations and CRQL values) in the instrument blank shall be reported in the appropriate concentration units (e.g., report in µg/L if the associated samples are water and in µg/Kg if the associated samples are soil).

26.5 Technical Acceptance Criteria

26.5.1 A minimum of two (2) instrument blanks shall be analyzed during an analytical sequence on a GC system meeting the initial calibration (section 8) or valid calibration check standard (section 9) criteria, and the PVS acceptance criteria (section 10).

26.5.2 The SMC RT in the instrument blank must be within ± 1.0 percent of the mean SMC RT calculated from the 1016/1260 initial calibration standards.

26.5.3 The SMC recovery criterion of 50-150 percent is advisory only. The SMC recovery in the instrument blank must, however, be greater than or equal to 20 percent and less than or equal to 200 percent.

26.5.4 Quantitation peaks or potential interferences in the first instrument blank (analyzed immediately after the initial calibration or before a valid calibration check) must have a response less than one-half the response in the corresponding RRT windows of the initial calibration low level standard.

26.5.5 Subsequent instrument blanks are acceptable with low level contamination. These instrument blanks may contain target compounds, quantitation peaks, or interferences at concentrations up to twice the CRQL (2x CRQL).

26.5.6 Following the analysis of a field sample containing high levels of target compounds or interferents, an instrument blank shall be analyzed and must meet acceptance criteria before proceeding with sample analyses. If an autosampler is utilized, then the field samples run after a high level sample must be carefully evaluated for carryover. The field sample immediately following the high level sample shall be reanalyzed, along with any other samples analyzed after the high level sample which shows evidence of carryover.

26.5.7 High level samples are defined as being field samples that contain target compounds or quantitation peaks at concentration levels that exceed twice the high level 1016/1260 initial calibration standard concentration and/or interferents that are detected at levels greater than the mid level 1016/1260 initial calibration concentration response of the nearest target compound or quantitation peak.

26.6 Corrective Action

26.6.1 All groups of samples analyzed shall be bracketed with two acceptable instrument blanks. If either instrument blank is unacceptable, corrective action shall be taken and all samples not bracketed by two valid instrument blanks shall be reanalyzed at no additional expense to the Agency.

26.6.2 If the response of any target compound or quantitation peak in an instrument blank analyzed after the initial calibration or before a valid calibration check standard is greater than or equal to one-half the response in the corresponding RRT window of the initial calibration low concentration standard, corrective action shall be performed and the system shall be demonstrated to be clean by the analysis of additional instrument blanks until all target compounds and/or quantitation peaks are within QC limits.

26.6.3 If any target compound and/or quantitation peak in an instrument blank analyzed after field/QC sample analyses is greater than two times the CRQL, another instrument blank shall be analyzed. If, on reanalysis, contamination still exceeds the criterion, corrective action shall be performed and the system demonstrated to be clean. Then, all associated field/QC samples analyzed since the last valid instrument blank or method blank which contain those target compounds, quantitation peaks, or interferents found in the instrument blank at levels greater than twice the CRQL shall be rerun.

26.6.4 If an instrument blank (other than the first instrument blank in the analytical sequence) contains target compounds, quantitation peaks, or interferents between one-half response and two times the CRQL, all positive results (results greater than or equal to the CRQL) for those compounds in samples analyzed after the last valid instrument blank shall be flagged with a "B".

26.6.5 Flag all instrument blank results "S" if the instrument blank SMC does not meet the advisory recovery of 50-150 percent.

26.6.6 If the instrument blank SMC recovery is less than 20 percent, greater than 200 percent, or if peak interferences are present, sample analysis shall be stopped, corrective action performed, and another instrument blank shall be analyzed. If the SMC is still outside the criterion upon reanalysis, corrective action, which may include a new initial calibration shall be performed. All samples analyzed since the last valid method or instrument blank shall be reanalyzed after a valid instrument blank has been demonstrated.

26.6.7 If the RTS criterion is not met for an instrument blank, sample analyses shall be stopped and another instrument blank shall be analyzed. If the RTS outside recovery limits on reanalysis, corrective action which may include a new initial calibration shall be performed. DO NOT continue with sample analyses until the RTS is within ± 1.0 percent.

26.6.8 Any samples not bracketed by valid instument blanks or a valid instrument blank and a method blank and shall be reanalyzed at no additional expense to the Agency.

26.7 Documentation

Instrument blank results are reported on Forms QIA-PCB, QIB-PCB, and QVI-PCB. Reporting requirements are listed in Exhibit B.

27 Laboratory Control Samples

27.1 Summary

The QTM PCB LCS mixture initially will be supplied to contractors by the Agency. The LCS mixture will contain Aroclors at known concentrations. The Laboratory shall spike the LCS mixture into a clean matrix that is similar to the samples being analyzed. The spiked matrix shall be prepared and analyzed using the procedures described for field samples. Analysis of the LCS will assess the performance of the analytical system prior to analyzing field samples.

NOTE: The Agency will provide the Laboratory with further instructions for the analysis of LCSs for wipe samples.

27.2 Frequency

An LCS shall be analyzed once per matrix per analytical sequence (24 hours) per instrument. The LCS shall be analyzed after the first instrument blank in the initial calibration analytical sequence or after the method blank in the daily calibration analytical sequence.

27.2.1 An LCS shall be analyzed with each:

- Set of water field samples (LCS prepared from reagent water);
- Set of soil/solid field samples (LCS prepared with quartz sand); and
- Set of oily field samples (LCS prepared with corn oil).

27.2.2 The LCS shall be analyzed with all associated samples in the same analytical sequence. If samples from a batch are

analyzed in more than one analytical sequence, the associated LCS shall be analyzed in the same analytical sequence. If an LCS extract is used up because of multiple analyses, the Laboratory shall use the original stock mix diluted into hexane in place of the original LCS sample in all subsequent analytical sequences. The Laboratory shall prepare this solution by diluting 100 µL of the LCS standard mixture into 5 mL of hexane and concentrating to 1 mL using nitrogen blowdown. The Laboratory shall note this in the Batch Narrative and shall use the EPA identification number as described in Exhibit B for this LCS solution.

27.3 Procedure

Spike the appropriate matrix with the LCS standard mixture and prepare as follows:

27.3.1 Water LCS

27.3.1.1 Allow the LCS mixture ampules to reach room temperature before opening. The ampules must not be opened until preparation/analysis is to occur. Exercise care in breaking the ampules open to avoid injury.

27.3.1.2 Spike 100 mL of reagent water with 100 µL of the LCS standard mixture as described in the instructions provided with the LCS mixtures. Use syringes to perform the spiking to ensure accuracy. Add the SMC and mix and carry through the extraction and clean-up process as described in section 14 or 15, depending on whether solvent or solid phase extraction is utilized. Proceed with the analysis as described in section 18.

27.3.1.3 Nominal aqueous LCS target compound concentrations are as follows:

Aroclor 1221	25 µg/L
Aroclor 1254	3 µg/L
Heptachlor epoxide	0.5 µg/L

27.3.2 Soil LCS

27.3.2.1 Allow the LCS mixture ampules to reach room temperature before opening. The ampules must not be opened until preparation/analysis is to occur. Exercise care in breaking the ampules open to avoid injury.

27.3.2.2 Spike 6 g of quartz sand with 100 µL of the LCS standard mixture as described in the instructions provided with the LCS mixtures. Use syringes to perform the spiking to ensure accuracy. Add the SMC and mix and carry through the extraction and clean-up process as described in section 14. Proceed with the analysis as described in section 18.

27.3.2.3 Nominal LCS target compound concentrations are as follows:

Aroclor 1221	417 µg/kg
Aroclor 1254	50 µg/kg
Heptachlor epoxide	8 µg/kg

27.3.3 Oil LCS

This section has not been finalized. The LCS composition and concentrations for oils are currently being investigated.

27.3.3.1 Allow the LCS mixture ampules to reach room temperature before opening. The ampules must not be opened until preparation/analysis is to occur. Exercise care in breaking the ampules open to avoid injury.

27.3.3.2 Spike 1 g of corn oil with 1 mL of the LCS standard mixture as described in the instructions provided with the LCS mixtures. Use syringes to perform the spiking to ensure accuracy. Mix and carry through the extraction and cleanup process adding 1.0 mL of SMC (0.2 µg/mL) and hexane and further prepare as described in sections 16.3 to 16.5.

27.3.3.3 Nominal LCS target compound concentrations are as follows:

Aroclor 1221	25,000 µg/kg
Aroclor 1254	3,000 µg/kg
Heptachlor epoxide	500 µg/kg

27.4 Technical Acceptance Criteria

27.4.1 All LCS compounds must have recoveries between 30 and 130 percent.

27.4.2 All LCS target compound absolute and relative retention times must be within the windows established from the low concentration standard during the initial calibration.

27.4.3 The RT of the SMC must be within ± 1.0 percent of the mean SMC RT established from the 1016/1260 initial calibration standards.

27.4.4 The SMC advisory recovery criterion is 50-150 percent. The SMC recovery in the LCS must, however, be greater than or equal to 20 percent and less than or equal to 200 percent.

27.5 Corrective Action

27.5.1 If an LCS compound recovery is outside the criterion, reanalyze the LCS. If upon reanalysis an LCS compound recovery is still outside the criterion, the LCS and all associated field and QC samples shall be reextracted and reanalyzed.

27.5.2 If the SMC is less than 20 percent, greater than 200 percent, or if peak interferences are present in the LCS, sample analyses shall be stopped and the LCS reanalyzed. If the LCS SMC recovery is still outside QC criteria upon reanalysis, corrective action shall be performed and the LCS and all associated samples shall be reextracted and reanalyzed.

27.5.3 If the RT or RRT for any LCS compound is not within the RT and RRT windows established from the low concentration standard during the initial calibration, reanalyze the LCS. If upon reanalysis a compound is still outside the windows, a new initial calibration must be performed before samples can be analyzed. The instrument must be recalibrated as described in section 8.

27.5.4 If the RTS criterion is not met for the LCS, sample analyses shall be stopped and the noncompliant LCS reanalyzed . If the RTS is still outside the criterion upon reanalysis, corrective action which may include a new initial calibration shall be performed. DO NOT proceed with sample analyses until the RTS is within ± 1.0 percent.

27.5.5 Any samples processed with an LCS that is out of control (i.e., does not meet any of the technical acceptance criteria) shall be reextracted and/or reanalyzed at no additional expense to the Agency.

27.6 Documentation

Laboratory Control Sample results are reported on Forms QIB-PCB, QII-PCB, and QVI-PCB. Reporting requirements are listed in Exhibit B.

EXHIBIT D

APPENDICES

APPENDIX A - DRY WEIGHT CALCULATIONS

If concentrations of target analytes in soil/solid samples are to be calculated on a dry weight basis the percent moisture and reported concentrations shall be calculated as follows:

1. Immediately after weighing the sample for extraction, weigh 5-10 g of the soil/solid into a tared crucible. Determine the percent moisture by drying overnight at 105 °C. Allow to cool in a desiccator before weighing. Concentrations of individual analytes will be reported relative to the dry weight of the soil/solid.

$$\%\ Moisture = \frac{grams\ of\ wet\ sample - grams\ of\ dry\ sample}{grams\ of\ wet\ sample} \times 100$$

2. Calculate analyte concentrations on a dry weight basis using the following equation:

$$Concentration\ (\mu g/kg) = \frac{(A_x)\ (V_t)}{(CF_m)\ (V_i)\ (W_s)\ (D)}$$

where:

A_x = response for the analyte to be measured

CF_m = calibration factor established by one of three techniques during the initial calibration.

(NOTE: Only one method of quantitation may be used for samples within a Batch and analyzed within a given analytical sequence.)

V_i = volume of extract injected (μL).

V_t = volume of concentrated extract (use 1000 μL or a factor of this when dilutions are made).

W_s = weight of sample extracted in g.

D = $\frac{100 - \%\ moisture}{100}$

APPENDIX B - GENERAL GUIDANCE FOR UNUSUAL OR HIGH CONCENTRATION SAMPLES

Difficulties may be encountered when using the QTM methods for the analysis of unusual matrices (e.g., sludges, solvents, paint chips, etc.) and samples containing high concentrations of target and non-target compounds. The following suggestions and general guidance may be useful when such samples are analyzed using the QTM methods.

1. A screening device such as a PID organic vapor analyzed (OVA) may be used if samples are suspected to contain very high levels of volatile organics. Such a screening device would allow the analyst to approximate sample dilutions to protect instrumentation and to minimize unnecessary sample reanalyses.

2. For highly contaminated samples, the laboratory may consider using smaller injection volumes to protect the instrumentation. If a smaller injection volume is used, the instrument sensitivity may need to be increased so that the contract required quantitation limits are met for all target compounds. NOTE: The injection volume must be consistent for all field and QC samples.

3. The use of GPC cleanup may also be appropriate for highly complex and contaminated samples. See the Statement of Work for Organics Analysis, Multi-Media, Multi-Concentration for general guidance on the use of GPC cleanup procedures.

4. Some types of soil/solid samples (e.g., paint chips) may need to be agitated prior to headspace analysis. Agitation through techniques such as sonication will help to fractionate and disperse these types of matrices for more effective extractions and headspace analysis.

APPENDIX C - MODIFIED SOLID PHASE EXTRACTION PROCEDURES FOR PESTICIDES AND PCBS

The following modified disk extraction procedure for water samples may be used in place of the corresponding SPE procedures in the QTM SOW for pesticides and PCBs. The procedure has been shown to be effective in the extraction and cleanup of water samples for pesticides and PCBs. However, this procedure has not been validated by the EPA, therefore, if these procedures are used, the Laboratory must demonstrate equivalency by meeting all methods QC requirements.

Because many disk extraction vacuum hardware components are available commercially, the Laboratory should follow the manufacturers directions for the proper use of these devices. The Laboratory should also refer to the extraction disk package inserts for additional details on the proper use of the disks and disk vacuum apparatus.

15.6 Disk Extraction Set-up and Conditioning (Option 2)

15.6.1 Place a 47 mm C-18 Empore™ disk onto the base unit of a glass filtration assembly. Gently pinch the clamp to assure even pressure around the disk. Use of a manifold for multiple extractions is acceptable.

NOTE: If the sample contains particulates, use an in-situ prefiltration media such as Filter Aid 400 or other commercially available membrane-type filter may be advisable. The prefiltration media should be placed prior to the wash step. (When using Filter Aid 400, adjust solvent volumes to allow bed submersion throughout the procedure.)

15.6.2 Wash the extraction apparatus and disk by adding 5 ml of methylene chloride to the reservoir, rinsing down the sides of the reservoir in the process. Draw a small amount through the disk with a vacuum; turn off the vacuum and allow the disk to soak for approximately one minute. Pull the remaining solvent through the disk and allow the disk to dry.

15.6.3 Condition the disk by adding approximately 5 mL of methanol to the reservoir, drawing a small amount through the disk then letting it soak for approximately one minute. Draw most of the remaining methanol through the disk, leaving 3-5 mm of the methanol on the surface of the disk.

NOTE: THE DISK SHOULD NOT BE ALLOWED TO GO DRY FROM THIS POINT UNTIL THE END OF SAMPLE EXTRACTION. RESIDUAL VACUUM IN THE EXTRACTION DEVICE MUST BE VENTED TO PREVENT THE DISK FROM DRYING OUT. MOST VACUUM MANIFOLD DEVICES AUTOMATICALLY VENT WHEN THE VACUUM IS TURNED OFF. THE VACUUM LINE MAY NEED TO BE DISCONNECTED IN ORDER TO VENT THE RESIDUAL VACUUM IF SUCTION FLASKS ARE USED. SHOULD THE DISK ACCIDENTALLY GO DRY, SIMPLY REPEAT THE METHANOL CONDITIONING STEP.

15.6.4 Add 10 mL of reagent water to the disk. Using the vacuum, pull most of the water through, again leaving 3-5 mm of water on the surface of the disk.

15.7 Compound Extraction and Elution Using Disks (Option 2)

15.7.1 Add 0.5 mL of methanol to the water sample and mix well.

15.7.2 Add the water sample to the reservoir and filter as quickly as the vacuum will allow. Drain as much water from the sample bottle as possible.

15.7.3 Remove filter assembly and insert suitable sample tube for eluate collection.

15.7.4 Add 5 mL of methylene chloride to sample bottle. Rinse bottle thoroughly and set aside momentarily.

15.7.5 Wet the disk with a small amount of acetone - just enough to wet the surface (approximately 0.5 mL) and immediately transfer the methylene chloride from the sample bottle to the disk with a disposable pipette, rinsing sides of the filtration reservoir in the process.

15.7.6 Draw half of the solvent through the disk then release the vacuum. Allow the remaining methylene chloride to soak the disk for approximately 1 minute then draw remainder through under vacuum.

15.7.7 Repeat the solvent rinse of the sample bottle using 5 mL of methylene chloride and transfer to the apparatus, rinsing down the sides of the reservoir. Add 5 mL of methylene chloride directly on the disk, let soak for approximately 1 minute, and draw through under vacuum.

15.7.8 Add 8 g of anhydrous sodium sulfate to dry the eluate. Pipet the eluate into a concentrator tube. Rinse the collection tube and sodium sulfate with two 5 mL portions of methylene chloride and combine the rinsates with the sample eluate in the concentrator tube. NOTE: If large clumps form on addition of the sodium sulfate to the sample eluate, break up the clumps before adding the rinses.

15.7.9 Pesticides - Concentrate extract to approximately 2 mL under gentle stream of nitrogen (may be warmed gently - approximately 30 degrees C.) Add hexane/acetone (9:1) to bring volume to 10 ml, then blow down to 1 ml.

PCBs - Concentrate extract to approximately 2 mL under gentle stream of nitrogen (may be warmed gently - approximately 30 degrees C.) Add hexane to bring volume to 10 ml, then blow down to approximately 4 ml and adjust to 10 ml final volume with hexane.

NOTE: To minimize analyte loss due to volatility, occasionally rinse sides of centrifuge and concentrator tubes with methylene chloride, hexane/acetone, or hexane, as appropriate, during the blowdown procedure.

15.7.10 Continue with the florisil cleanup procedure for pesticides analysis or sulfuric acid and florisil procedure for PCB analysis as described in the methods.

DRAFT

EXHIBIT E

QUALITY ASSURANCE/QUALITY CONTROL REQUIREMENTS

TABLE OF CONTENTS

SECTION		PAGE
Overview		E-3
I	Introduction	E-4
II	Good Laboratory Practices	E-6
III	Quality Assurance Plan	E-7
IV	Standard Operating Procedures	E-12
V	Analytical Standards Requirements	E-19
VI	Contract Compliance Screening	E-25
VII	Regional Data Review	E-27
VIII	Performance Evaluation Samples	E-28
IX	Data Package Audits	E-31
X	On-Site Laboratory Evaluations	E-33
XI	Quality Assurance And Data Trend Analysis	E-36
XII	Data Management	E-38

OVERVIEW

A comprehensive quality assurance and quality control program is an integral part of the Environmental Protection Agency's (EPA's) Contract Laboratory Program (CLP). The quality assurance (QA) component includes management review and oversight at the planning, implementation, and completion stages of the environmental data collection activity to ensure that data provided are of the quality required. The quality control (QC) system includes those activities required during data collection to produce the data quality desired and to document the quality of the collected data.

During the planning of an environmental data collection program, QA activities focus on defining data quality criteria and designing a QC system to measure the quality of data being generated. During the implementation of the data collection effort, QA activities ensure that the QC system is functioning effectively and that the deficiencies uncovered by the QC system are corrected. After environmental data are collected, QA activities focus on assessing the quality of data obtained to determine its suitability to support enforcement or remedial decisions.

This Exhibit describes the overall quality assurance/quality control operations and the processes by which the CLP meets the QA/QC objectives defined above. This contract requires a variety of QA/QC activities. These contract requirements are the minimum QA/QC activities necessary to satisfy the analytical requirements associated with the determination of the different method analytes. The requirements are designed to facilitate laboratory comparison by providing USEPA with data from all Contractors. These requirements do not release the analytical Contractor from maintaining their own QC checks on method and instrument performance.

SECTION I

INTRODUCTION

Appropriate use of data generated under the wide range of analytical conditions encountered in environmental analyses requires reliance on the QC procedures and criteria incorporated into the methods. The methods in this contract have been validated on samples typical of those received by the laboratories participating in the CLP. However, the validation of these methods does not guarantee that they perform equally well for all sample matrices encountered. Inaccuracies can also result from causes other than unanticipated matrix effects, such as sampling artifacts, equipment malfunctions, and operator error. Therefore, the QC component of each method is indispensable.

The data acquired from QC procedures are used to estimate and evaluate the information content of analytical results and to determine the necessity for, or the effect of, corrective action procedures. The means used to estimate information content include precision, accuracy, detection limit, and other quantitative and qualitative indicators. This Exhibit defines the QA/QC procedures and components that are mandatory to the performance of the contract. In addition, it gives an overview of the activities required in an integrated program to generate data of known and documented quality required to meet defined objectives.

The necessary components of a complete QA/QC program include internal QC criteria that must be met at acceptable levels of performance, as determined by QA review. External review of data and procedures is accomplished by the monitoring activities of the National Program Office, Regional data users, the CLASS contractor, NEIC, and EMSL-LV. Each external review accomplishes a different purpose. These reviews are described in specific sections of this Exhibit. Blind performance samples and an on-site laboratory evaluation system are also part of the external QA monitoring. A feedback loop provides the results of the various review functions to the contract laboratories through direct communications with the Administrative Project Officers (APOs) and Technical Project Officers (TPOs).

This Exhibit is not a guide to constructing quality assurance project plans, quality control programs, or a quality assurance organization. It is, however, an explanation of the QA/QC requirements of the program. It also outlines some minimum standards for QA/QC programs and includes specific items that are required in a QA Plan. Delivery of this documentation provides the Agency with a complete data package which will stand alone, and limits the need for contact with the Contractor or with an analyst, at a later date, if the analysis is questioned.

To assure that the product delivered by the Contractor meets the requirements of the contract and allows inter-laboratory data comparison, the Agency has established the following contract requirements.

- Preparation of and adherence to a written Quality Assurance Plan, the elements of which are designated in Section III.
- Preparation of and adherance to QA/QC Standard Operating Procedures (SOPs) as described in Section IV.
- Adherence to the QC and analytical methods specified in the contract.
- Verification of analytical standards and documentation of the purity of neat materials and the purity and accuracy of solutions obtained from private chemical supply houses.
- Participation in the analyses of Laboratory Evaluation Samples, including adherence to corrective action procedures.
- Submission of all raw data and pertinent documentation for Regional review.
- Participation in on-site laboratory evaluations, including adherence to corrective action procedures.
- Submission of all original documentation generated during sample analyses for Agency review.

SECTION II

GOOD LABORATORY PRACTICES

Good laboratory practices and good automated laboratory practices are defined as those common sense procedures carried out by qualified laboratory personnel to ensure the quality and integrity of the analytical data being produced. By following the specific analytical and reporting procedures outlined in this SOW, the Contractor will produce analytical data of known and documented quality. Data integrity is defined as ensuring that data are complete, consistent, and without errors, and ensuring the prevention of information corruption and unauthorized data modification.

Good laboratory practices and good automated laboratory practices are managerial concepts covering the organizational process and the conditions under which laboratory studies are planned, performed, monitored, recorded, and reported. Good laboratory practices and good automated laboratory practices include but are not necessarily limited to procedures, programs, or statements regarding schedules, plans, standard operating procedures, inspections (procedural, process, and facility), audits (data, report, and computer), quality assurance statements, archives, and staff records. Good laboratory practices and good automated laboratory practices also include but are not limited to classification of work (such as RAS vs SAS, government vs private), sample retention procedures, equipment calibration and maintenance, characterization requirements of samples (such as identification and stability), method and software validation, approval of supplies and standards, traceability of standards back to their origin, sample and data chain-of-custody, inspection of electronic and hardcopy data and data packages, computer and facility security, staff training, and monitoring by the laboratory's quality assurance officer.

SECTION III

QUALITY ASSURANCE PLAN

1 Overview

The Contractor shall design and implement a quality assurance program with the objective of providing sound analytical chemical measurements. This program shall specify the quality control procedures, corrective action procedures, and all documentation required during data collection, as well as the quality assessment measures performed by management to ensure acceptable data production. As evidence of such a program, the Contractor shall prepare a written Quality Assurance Plan (QAP) which achieves the following.

- Maintains data integrity, validity, and usability.
- Ensures that analytical measurement systems are maintained in an acceptable state of stability and reproducibility.
- Detects problems through data assessment and establishes corrective action procedures which keep the analytical process reliable.
- Documents all aspects of the measurement process in order to provide data which are technically sound and legally defensible.

The QAP shall present, in specific terms, the policies, organization, objectives, functional guidelines, and specific QA and QC activities designed to achieve the data quality requirements in this contract. Where applicable, SOPs pertaining to each element shall be included or referenced as part of the QAP. The QAP shall be available during the on-site laboratory evaluation and shall be submitted within seven days of written request by the TPO, EMSL-LV, and/or NEIC. Additional information relevant to the preparation of a QAP can be found in EPA and ASTM publications.

2 Elements of a Quality Assurance Plan

2.1 Organization and Personnel

2.1.1 QA Policy and Objectives

2.1.2 QA Management

- Organization
- Assignment of QC and QA Responsibilities

- Reporting Relationships
- QA Document Control Procedures
- QA Program Assessment Procedures

2.1.3 Personnel

- Resumes
- Education and Experience Pertinent to This Contract and as Specified in Exhibit A
- Training Programs

2.2 Facilities and Equipment

2.2.1 Instrumentation and Backup Alternatives

2.2.2 Maintenance Activities and Schedules

2.3 Document Control

2.3.1 Laboratory Notebook Policy

2.3.2 Sample Tracking/Custody Procedures

2.3.3 Logbook Maintenance and Archiving Procedures

2.3.4 Case File Organization, Preparation, and Review Procedures

2.3.5 Procedures for Preparation, Approval, Review, Revision, and Distribution of SOPs

2.3.6 Process for Revision of Technical or Documentation Procedures

2.4 Analytical Methodology

2.4.1 Calibration Procedures and Frequency

2.4.2 Sample Preparation/Extraction Procedures

2.4.3 Sample Analysis Procedures

2.4.4 Standards Preparation Procedures

2.4.5 Decision Processes, Procedures and Responsibility for Initiation of Corrective Action

2.5 Data Generation

2.5.1 Data Collection Procedures

2.5.2 Data Reduction Procedures

2.5.3 Data Validation Procedures

2.5.4 Data Reporting and Authorization Procedures

2.6 Quality Control

2.6.1 Solvent, Reagent, and Adsorbent Check Analysis

2.6.2 Reference Material Analysis

2.6.3 Internal Quality Control Checks

2.6.4 Corrective Action and Determination of QC Limit Procedures

2.6.5 Responsibility Designation

2.7 Quality Assurance

2.7.1 Data Quality Assessment

2.7.2 Systems/Internal Audits

2.7.3 Performance/External Audits

2.7.4 Corrective Action Procedures

2.7.5 Quality Assurance Reporting Procedures

2.7.6 Responsibility Designation

3 Updating and Submitting the QAP

3.1 Initial Submission

During the contract solicitation process, the Contractor is required to submit their QAP to EMSL-LV and NEIC. Within 60 days after contract award, the Contractor shall revise the QAP to be in full compliance with the requirements of this contract. The Contractor shall maintain the revised QAP on file at the Contractor facility for the term of the contract. The revised QAP will become the official QAP under the contract and may be used during legal proceedings. The revised QAP shall include:

3.1.1 Changes resulting from 1) The Contractor's internal review of its organization, personnel, facility, equipment, policy and procedures; and 2) The Contractor's implementation of the requirements of the contract; and

3.1.2 Changes resulting from the Agency's review of the laboratory evaluation sample data, bidder supplied documentation, and recommendations made during the pre-award on-site laboratory evaluation.

3.2 Subsequent Updates and Submissions

During the term of the contract, the Contractor shall amend the QAP when the following circumstances occur:

- The Agency modifies the contract;
- The Agency notifies the Contractor of deficiencies in the QAP;
- The Agency notifies the Contractor of deficiencies resulting from the Agency's review of the Contractor's performance;
- The Contractor identifies deficiencies resulting from its internal review of its QAP;
- The Contractor's organization, personnel, facility, equipment, policy, or procedures change; and
- The Contractor identifies deficiencies resulting from the internal review of its organization, personnel, facility, equipment, policy, or procedures changes.

The Contractor shall amend the QAP within 30 days of when the circumstances listed above result in a discrepancy between what was previously described in the QAP and what is presently occurring at the Contractor's facility.

When the QAP is amended, all changes in the QAP shall be clearly marked (e.g., a bar in the margin indicating where the change is found in the document, or highlighting the change by underlining the change, bold printing the change, or using a different print font). The amended section pages shall have the date on which the changes were implemented. The Contractor shall incorporate all amendments to the current QAP document. The Contractor shall archive all amendments to the QAP document for future reference by the Agency.

The Contractor shall send a copy of the current QAP to the designated recipients within seven days of a request by the TPO or NEIC.

3.3 Corrective Action:

If the Contractor fails to adhere to the requirements listed in this section, the Contractor may expect, but the Agency is not limited to the following actions: reduction of numbers of samples sent under this contract, suspension of sample shipment to the Contractor, data package audit, an on-site laboratory evaluation, remedial laboratory evaluation sample, and/or contract sanctions, such as a Cure Notice.

SECTION IV

STANDARD OPERATING PROCEDURES

1 Overview

In order to obtain reliable results, adherence to prescribed analytical methodology is imperative. In any operation that is performed on a repetitive basis, assurance of data quality and reproducibility is best accomplished through the use of SOPs. As defined by the EPA, an SOP is a written document which details an operation, analysis, or action which is commonly accepted as the method for performing certain routine or repetitive tasks.

SOPs prepared by the Contractor shall be functional (i.e., clear, comprehensive, up-to-date, and sufficiently detailed to permit duplication of results by qualified analysts). All SOPs shall reflect activities as they are currently performed by the Contractor. In addition, all SOPs shall be:

- Consistent with current EPA regulations, guidelines, and QTM contract requirements;
- Consistent with instrument manufacturers' specific instruction manuals;
- Available to the TPO, EMSL/LV and/or NEIC within seven days of a written request;
- Available to the Agency during an on-site laboratory evaluation (A complete set of SOPs shall be bound together and available for inspection at such evaluations. During on-site evaluations, laboratory personnel may be asked to demonstrate the application of the SOPs);
- Available to the designated recipients within seven days, upon request by the TPO and/or NEIC;
- Capable of providing for the development of documentation that is sufficiently complete to record the performance of all tasks required by the protocol;
- Capable of demonstrating the validity of data reported by the Contractor and explain the cause of missing or inconsistent results;

- Capable of describing the corrective measures and feedback mechanisms utilized when analytical results do not meet protocol requirements;
- Reviewed regularly and updated as necessary when contract, facility, or Contractor procedural modifications are made;
- Archived for future reference in useability or evidentiary situations;
- Available at specific work stations as appropriate; and
- Subject to a document control procedure which precludes the use of outdated or inappropriate SOPs.

2 SOP Format:

The format for SOPs may vary depending upon the kind of activity for which they are prepared. At a minimum, however, the following sections must be included:

- Title Page;
- Scope and Application;
- Definitions;
- Procedures;
- QC Limits;
- Corrective Action Procedures, Including Procedures for Secondary Review of Information Being Generated;
- Documentation Description and Example Forms;
- Miscellaneous Notes and Precautions; and
- References.

3 SOP Requirements:

The Contractor shall maintain the following SOPs:

3.1 Evidentiary SOPs:

Evidentiary SOPs for required chain-of-custody and document control are discussed in Exhibit F, "Specification for Written Standard Operating Procedures."

3.2 Sample Receipt and Storage:

- Sample receipt and identification logbooks;
- Refrigerator temperature logbooks;
- Extract storage logbooks; and
- Security precautions.

3.3 Sample Preparation:

- Reagent purity check procedures and documentation;
- Extraction procedures;
- Extraction bench sheets; and
- Extraction logbook maintenance.

3.4 Glassware Cleaning

3.5 Calibration (Balances):

- Procedures;
- Frequency requirements;
- Acceptance criteria and corrective actions; and
- Logbook maintenance authorization.

3.6 Analytical Procedures (for each analytical system):

- Instrument performance specifications;
- Instrumental operating procedures;
- Data acquisition system operation;
- Procedures when automatic quantitation algorithms are overridden;
- QC-required parameters;

- Analytical run/injection logbooks; and
- Instrumental error and editing flag descriptions and resulting corrective actions.

3.7 Maintenance Activities (for each analytical system):

- Preventive maintenance schedule and procedures;
- Corrective maintenance determinants and procedures; and
- Maintenance authorization.

3.8 Analytical Standards:

- Standard coding/identification and inventory system;
- Standards preparation logbook(s);
- Standards preparation procedures;
- Procedures for equivalency/traceability analyses and documentation;
- Purity logbook (primary standards and solvents);
- Storage, replacement, and labeling requirements; and
- QC and corrective action measures.

3.9 Data Reduction Procedures:

- Data processing systems operation;
- Outlier identification methods;
- Identification of data requiring corrective action; and
- Procedures for format and/or forms for each operation.

3.10 Documentation Policy/Procedures:

- Laboratory/analysts' notebook policy, including review policy;
- Complete Batch File (CBF) contents;
- Complete Batch File (CBF) organization and assembly procedures, including review policy; and

- Document inventory procedures, including review policy.

3.11 Data Validation/Self Inspection Procedures:

- Data flow and chain-of-command for data review;
- Procedures for measuring precision and accuracy;
- Evaluation parameters for identifying systematic errors;
- Procedures to assure that hardcopy and electronic deliverables are complete and compliant with the requirements in SOW Exhibits B and H;
- Procedures to assure that hardcopy deliverables are in agreement with their comparable electronic deliverables;
- Demonstration of internal QA inspection procedure (demonstrated by supervisory sign-off on personal notebooks, internal laboratory evaluation samples, etc.);
- Frequency and type of internal audits (e.g., random, quarterly, spot checks, perceived trouble areas);
- Demonstration of problem identification-corrective actions and resumption of analytical processing. Sequence resulting from internal audit (i.e., QA feedback); and
- Documentation of audit reports (internal and external), audit responses, corrective action, etc.

3.12 Data Management and Handling

- Procedures for controlling and estimating data entry errors.
- Procedures for reviewing changes to data and deliverables and ensuring traceability of updates.
- Lifecycle management procedures for testing, modifying, and implementing changes to existing computing systems including hardware, software, and documentation or installing new systems.
- Database security, backup and archival procedures including recovery from system failures.
- System maintenance procedures and response times.

- Individual(s) responsible for system operation, maintenance, data integrity and security.

- Specifications for staff training procedures.

4 Delivery Schedule: Updating and Submitting SOPs

4.1 Initial Submission

During the contract solicitation process, the Contractor is required to submit their SOPs to EMSL/LV and NEIC. Within 60 days after contract award, the Contractor shall revise the set of SOPs to be in full compliance with the requirements of this contract. The Contractor shall maintain the revised set of SOPs on file at the Contractor facility for the term of the contract. The revised SOPs will become the official SOPs under the contract and may be used during legal proceedings. The revised SOPs shall include:

4.1.1 Changes resulting from A) The Contractor's internal review of its organization, personnel, facility, equipment, policy and procedures, and B) The Contractor's implementation of the requirements of the contract; and

4.1.2 Changes resulting from the Agency's review of the laboratory evaluation sample data, bidder supplied documentation, and recommendations made during the pre-award on-site laboratory evaluation.

4.2 Subsequent Updates and Submissions

During the term of the contract, the Contractor shall amend the SOPs when the following circumstances occur:

- The Agency modifies the contract;

- The Agency notifies the Contractor of deficiencies in its SOPs;

- The Agency notifies the Contractor of deficiencies resulting from the Agency's review of the Contractor's performance;

- The Contractor's procedures change;

- The Contractor identifies deficiencies resulting from its internal review of its SOPs documentation; or

- The Contractor identifies deficiencies resulting from the internal review of its procedures.

The Contractor shall amend the SOPs or write new SOPs within 30 days of when the circumstances listed above result in a discrepancy between what was previously described in the SOPs and what is presently occurring at the Contractor's facility. When the SOPs are amended, all changes shall be clearly marked (e.g., a bar in the margin indicating where the change is found in the document, or highlighting the change by underlining the change, bold printing the change, or using a different print font). The amended/new SOPs shall have the date on which the changes were implemented.

When the SOPs are amended or new SOPs are written, the Contractor shall document in a letter the reasons for the changes, and submit the amended SOPs or new SOPs to the TPO, EMSL-LV (quality assurance/technical SOPs), and NEIC (evidentiary SOPs). The Contractor shall send the letter and the amended sections of the SOPs or new SOPs within seven days of the change. An alternate delivery schedule for the submittal of the letter and amended/new SOPs may be proposed by the Contractor, but it is the sole decision of the Agency, represented either by the TPO or APO, to approve or disapprove the alternate delivery schedule. If an alternate delivery schedule is proposed, the Contractor shall describe in a letter to the TPO, APO, and the Contracting Officer why he/she is unable to meet the delivery schedule listed in this section. The TPO/APO will not grant an extension for greater than 30 days for amending/writing new SOPs. The TPO/APO will not grant an extension for greater than 14 days for submission of the letter documenting the reasons for the changes and for submitting amended/new SOPs. The Contractor shall proceed and not assume that an extension will be granted until so notified by the TPO and/or APO.

The Contractor shall send a complete set of current SOPs or individually requested SOPs to the recipients he/she designates within seven days of a request by the TPO, APO, or NEIC. Documentation of the reasons for changes to the SOPs shall also be submitted along with the SOPs.

4.3 Corrective Action:

If the Contractor fails to adhere to the requirements listed in this section, the Contractor may expect, but the Agency is not limited to the following actions: reduction of numbers of samples sent under this contract, suspension of sample shipment to the Contractor, data package audit, an on-site laboratory evaluation, remedial laboratory evaluation sample, and/or contract sanctions, such as a Cure Notice.

SECTION V

ANALYTICAL STANDARDS REQUIREMENTS

1 Overview

The U.S. Environmental Protection Agency (EPA) will not supply analytical reference standards either for direct analytical measurements or for the purpose of traceability. All contract laboratories will be required to prepare from neat materials or purchase from private chemical supply houses those standards necessary to successfully and accurately perform the analyses required in this protocol.

2 Preparation of Chemical Standards from the Neat High Purity Bulk Material

A Contractor may prepare their chemical standards from neat materials. Commercial sources for neat chemical standards pertaining to compounds listed on the Target Compound List (Exhibit C) are given in Appendix C of the "Quality Assurance Materials Bank: Analytical Reference Standards" Seventh Edition, January 1988. Contractors shall obtain the highest purity possible when purchasing neat chemical standards; when standards are purchased at less than 97% purity, the Contractor shall document the reason why a higher purity could not be obtained.

2.1 Neat chemical standards shall be kept refrigerated when not being used in the preparation of standard solutions. Proper storage of neat chemicals is essential in order to safeguard them from decomposition.

2.2 The purity of a compound can sometimes be misrepresented by a chemical supply house. Since knowledge of purity is needed to calculate the concentration of solute in a solution standard, it is the laboratory's responsibility to have analytical documentation ascertaining that the purity of each compound is correctly stated. Purity confirmation, when performed, should use either differential scanning calorimetry, gas chromatography with flame ionization detection, high performance liquid chromatography, infrared spectrometry, or other appropriate techniques. Use of two or more independent methods is recommended. The correction factor for impurity when weighing neat materials in the preparation of solution standards is:

Equation 1

$$\textit{weight of impure compound} = \frac{\textit{weight of pure compound}}{(\textit{percent purity}/100)}$$

where "weight of pure compound" is that required to prepare a specific volume of a solution standard of a specified concentration.

When compound purity is assayed to be 97 percent or greater, the weight may be used without correction to calculate the concentration of the stock standard. If the compound purity is assayed to be less than 97 percent, the weight shall be corrected when calculating the concentration of the stock solution.

2.3 Mis-identification of compounds occasionally occurs and it is possible that a mislabeled compound may be received from a chemical supply house. It is the laboratory's responsibility to have analytical documentation ascertaining that all compounds used in the preparation of solution standards be correctly identified. Identification confirmation, when performed, shall use gas chromatography/mass spectrometry analysis on at least two different analytical columns, or other appropriate techniques.

2.4 Calculate the weight of material to be weighted out for a specified volume taking into account the purity of the compound and the desired concentration. A second person shall verify the accuracy of the calculations. Check balances for accuracy with a set of standard weights. All weighing should be performed on an analytical balance to the nearest 0.1 mg and verified by a second person. The solvent used to dissolve the solute should be compatible with the protocol in which the standard is to be used; the solute should be soluble, stable, and nonreactive with the solvent. In the case of a multicomponent solution, the components must not react with each other.

2.5 Transfer the solute to a volumetric flask and dilute to the specified solution volume with solvent after ensuring dissolution of the solute in the solvent. Sonication or warming may be performed to promote dissolution of the solute. This solution is to be called the primary standard and all subsequent dilutions shall be traceable back to the primary standard.

2.6 Log notebooks are to be kept for all weighing and dilutions. All subsequent dilutions from the primary standard and the calculations for determining their concentrations are to be recorded and verified by a second person. All solution standards are to be clearly labeled as to the identity of the compound or compounds, concentration, date prepared, solvent, and initials of the preparer.

3 <u>Purchase of chemical standards already in solution</u>

Solutions of analytical reference standards can be purchased by Contractors provided they meet the following criteria:

3.1 Contractors shall maintain the following documentation to verify the integrity of the standard solutions they purchase:

3.1.1 Mass spectral identification confirmation of the neat material;

3.1.2 Purity confirmation of the neat material; and

3.1.3 Chromatographic and quantitative documentation that the solution standard was checked according to the following section.

3.2 The Contractor shall purchase standards for which the quality is demonstrated statistically and analytically. One way this can be demonstrated is to prepare and analyze three solutions; a high standard, a low standard, and a standard at the target concentration (see 3.2.1 and 3.2.2 below). The Contractor shall have documentation that the analytical results for the high standard and low standard are consistent with the difference in theoretical concentrations. This is done by the Student's t-test in 3.2.4. If this is achieved, the Contractor shall then demonstrate that the concentration of the target standard lies midway between the concentrations of the low and high standards. This is done by the Student's t-test in 3.2.5. Thus the standard is certified to be within 10 percent of the target concentration using the equations in 3.2.6.

If the procedure above is used, the Contractor shall document that the following have been achieved:

3.2.1 Two solutions of identical concentration shall be prepared independently from neat materials. An aliquot of the first solution shall be diluted to the intended concentration (the "target standard"). One aliquot is taken from the second solution an diluted to a concentration ten percent greater than the target standard. This is called the "high standard". One further aliquot is taken from the second solution and diluted to a concentration 10 percent less that the target standard. This is called the "low standard".

3.2.2 Six replicate analyses of each standard (a total of 18 analyses) shall be performed in the following sequence: low standard, target standard, high standard, low standard, target standard, high standard, ...

3.2.3 The mean and variance of the six results for each solution shall be calculated.

Equation 2

$$MEAN = (Y_1 + Y_2 + Y_3 + Y_4 + Y_5 + Y_6)/6$$

Equation 3

$$VARIANCE = (Y_1^2 + Y_2^2 + Y_3^2 + Y_4^2 + Y_5^2 + Y_6^2 - 6*(MEAN)^2/5$$

The values Y_1, Y_2, Y_3, ..., represent the results of the six analyses of each standard. The means of the low, target, and high standards are designated M_1, M_2, and M_3, respectively. The variances of the low, target, and high standards are designated V_1, V_2, and V_3, respectively. Additionally, a pooled variance, V_p, is calculated.

Equation 4

$$V_p = (V_1/(0.81) + V_2 + V_3/(1.21))/3$$

If the square root of V_p is less than one percent of M_2, then $M_2^2/10{,}000$ is to be used as the value of v_p in all subsequent calculations.

3.2.4 The test statistic shall be calculated:

Equation 5

$$TEST\ STATISTIC = |(M_3/1.1) - (M_1/0.9)|/(V_p/3)^{0.5}$$

If the test statistic exceeds 2.13 then the supplier has failed to demonstrate a 20 percent difference between the high and low standards. In such a case, the standards are not acceptable.

3.2.5 The test statistic shall be calculated:

Equation 6

$$TEST\ STATISTIC = |M_2 - (M_1/1.8) - (M_3/2.2)|/(V_p/4)^{0.5}$$

If the test statistic exceeds 2.13, the supplier has failed to demonstrate that the target standard concentration is midway between the high and low standards. In such a case, the standards are not acceptable.

3.2.6 The 95 percent confidence intervals for the mean result of each standard shall be calculated:

Equation 7

$$\textit{Interval for Low Standard} = M_1 \pm (2.13)(V_p/6)^{0.5}$$

Equation 8

$$\textit{Interval for Target Standard} = M_2 \pm (2.13)(V_p/6)^{0.5}$$

Equation 9

$$\textit{Interval for High Standard} = M_3 \pm (2.13)(V_p/6)^{0.5}$$

These intervals shall not overlap. If overlap is observed, then the supplier has failed to demonstrate the ability to discriminate the 10 percent difference in concentrations. In such a case, the standards are not acceptable.

In all cases, the Contractor is responsible for the quality of the standards employed for analyses under this contract.

4 Requesting Standards from the EPA Standards Repository

Solutions of analytical reference materials can be ordered from the U.S. EPA Chemical Standards Repository, depending on availability. The Contractor can place an order for standards only after demonstrating that these standards are not available from commercial vendors either in solution or as a neat material.

5 Documentation of the Verification and Preparation of Chemical Standards

It is the responsibility of each laboratory to maintain the necessary documentation to show that the chemical standards they have used in the performance of CLP analysis conform to the requirements previously listed. Weighing logbooks, calculations, chromatograms, mass spectra, etc., whether produced by the laboratory or purchased from chemical supply houses, shall be maintained by the Contractor and may be subject to review during on-site laboratory evaluations. Documentation of standards preparation may be required to be sent to EPA for verification of contract compliance. In those cases where the documentation is supportive of the analytical results of data packages sent to EPA, such documentation is to be kept on file by the laboratories for a period of one year.

Upon request by the TPO or APO, the Contractor shall submit their most resent previous year's documentation (12 months) for the verification and preparation of chemicals standards within 14 days of the receipt of request to the recipients he/she designates.

The Agency may generate a report discussing deficiencies in the Contractor's documentation for the verification and preparation of chemical standards or may discuss the deficiencies during an on-site laboratory evaluation. In a detailed letter to the TPO, APO, and EMSL-LV, the Contractor shall address the deficiencies and the subsequent corrective action implemented by the Contractor to correct the deficiencies within 14 days of receipt of the report or the on-site laboratory evaluation. An alternate delivery schedule may be proposed by the Contractor, but it is the sole decision of the Agency, represented either by the TPO or APO, to approve or disapprove the alternate delivery schedule. If an alternate delivery schedule is proposed, the Contractor shall describe in a letter to the TPO, APO, and the Contracting Officer why he/she is unable to meet the delivery schedule listed in this section. The TPO/APO will not grant an extension for greater than 14 days for the Contractor's response letter to the standards documentation report. The Contractor shall proceed and not assume that an extension will be granted until so notified by the TPO and/or APO.

If new SOPs are required to be written or SOPs are required to be amended because of the deficiencies and the subsequent corrective action implemented by the Contractor, the Contractor shall write/amend and submit the SOPs per the requirements listed in Exhibit E, Section IV.

6 Corrective Action

If the Contractor fails to adhere to the requirements listed in this section, the Contractor may expect, but the Agency is not limited to the following actions: reduction of numbers of samples sent under this contract, suspension of sample shipment to the Contractor, data package audit, an on-site laboratory evaluation, remedial laboratory evaluation sample, and/or contract sanctions, such as a Cure Notice.

SECTION VI

CONTRACT COMPLIANCE SCREENING

Contract Compliance Screening (CCS) is one aspect of the Government's contractual right of inspection of analytical data. CCS examines the Contractor's adherence to the contract requirements based on the sample data package delivered to the Agency.

CCS is performed by the CLASS contractor under the direction of the EPA. To assure a uniform review, a set of standardized procedures have been developed to evaluate the sample data package submitted by a Contractor against the technical and completeness requirements of the contract.

CCS results are mailed out to the Contractor and all other data recipients. The Contractor has a period of time to correct deficiencies. The Contractor shall send all corrections to the Region-Client and the CLASS contractor.

CCS results are used in conjunction with other information to measure overall Contractor performance and to take appropriate actions to correct deficiencies in performance.

The Agency may generate a CCS trend report which summarizes CCS results over a given period of time. The Agency may send the CCS trend report or discuss the CCS trend report during an on-site laboratory evaluation. In a detailed letter to the TPO and APO, the Contractor shall address the deficiencies and the subsequent corrective action implemented by the Contractor to correct the deficiencies within 14 days of receipt of the report or the on-site laboratory evaluation. An alternate delivery schedule may be proposed by the Contractor, but it is the sole decision of the Agency, represented either by the TPO or APO, to approve or disapprove the alternate delivery schedule. If an alternate delivery schedule is proposed, the Contractor shall describe in a letter to the TPO, APO, and the Contracting Officer why he/she is unable to meet the delivery schedule listed in this section. The TPO/APO will not grant an extension for greater than 14 days for the Contractor's response letter to the CCS trend report. The Contractor shall proceed and assume that an extension will be granted until so notified by the TPO and/or APO.

If new SOPs are required to be written or SOPs are required to be amended because of the deficiencies and the subsequent corrective action implemented by the Contractor, the Contractor shall write/amend and submit the SOPs per the requirements listed in Exhibit E, Section IV.

If the Contractor fails to adhere to the requirements listed in this section, the Contractor may expect, but the Agency is not limited to the following actions: reduction of numbers of samples sent under this contract, suspension of sample shipment to the Contractor, data package audit, an on-site

laboratory evaluation, remedial laboratory evaluation sample, and/or contract sanctions, such as a Cure Notice.

SECTION VII

REGIONAL DATA REVIEW

Contract laboratory data are generated to meet the specific needs of the EPA Regions. In order to verify the useability of data for the intended purpose, each Region reviews data from the perspective of the end-user and based upon functional aspects of data quality. General guidelines for data review have been developed jointly by the Regions and the National Program Office. Each Region uses these guidelines as the basis for data evaluation. Individual Regions may augment the basic guideline review process with additional review based on Region-specific or site-specific concerns. Regional reviews, like the sites under investigation, vary based on the nature of the problem under investigation and the Regional response appropriate to the specific circumstances.

Regional data reviews, relating useability of the data to a specific site, are part of the collective assessment process. They complement the screening performed by the CLASS contractor, which is designed to identify contractual discrepancies, and the review performed at EMSL-LV which is designed to determine technical quality and consistency. These individual evaluations are integrated into a collective review that is necessary for program and laboratory administration and management and may be used to take appropriate action to correct deficiencies in the Contractor's performance.

SECTION VIII

PERFORMANCE EVALUATION SAMPLES

1 Overview

Although intra-laboratory QC may demonstrate Contractor and method performance that can be tracked over time, an external performance evaluation program is an essential feature of a QA program. As a means of measuring Contractor and method performance, Contractors participate in inter-laboratory comparison studies conducted by the EPA. Results from the analysis of these performance evaluation samples (PES) will be used by the EPA to verify the Contractor's continuing ability to produce acceptable analytical data. The results are also used to assess the precision and accuracy of the analytical methods for specific analytes.

Sample sets may be provided to participating Contractors as frequently as on a Batch-by-Batch basis as zero blind (recognizable as a QC sample of known composition); single blind (recognizable as a QC sample and of unknown composition); or double blind (not recognizable as a QC material and of unknown composition) samples. The laboratory evaluation samples may be sent to either by the Regional client or the National Program Office, and may be used for contract action.

Contractors are required to analyze the samples and return the data package and all raw data within the contract required turnaround time.

At a minimum, the results are evaluated for compound identification, quantitation, and sample contamination. Confidence intervals for the quantitation of target compounds are based on reported values using population statistics. The Agency may adjust the scores on any given PES to compensate for any unexpected difficulties with a particular sample. The Agency will notify the Contractor of unacceptable performance.

2 Contractor Performance

A Contractor's results on the laboratory evaluation samples will determine the Contractor's performance as follows:

2.1 Acceptable, No Response Required (Score greater than or equal to 90 percent):

Data meets most or all of the scoring criteria. No response is required.

2.2 Acceptable, Response Explaining Deficiency(ies) Required (Score greater than or equal to 75 percent but less than 90 percent):

Deficiencies exist in the Contractor's performance.

Within 14 days of receipt of notification from the EPA, the Contractor shall describe the deficiency(ies) and the action(s) taken to correct the deficiency(ies) in a letter to the APO, TPO, and EMSL/LV.

An alternate delivery schedule may be proposed by the Contractor, but it is the sole decision of the Agency, represented either by the TPO or APO, to approve or disapprove the alternate delivery schedule. If an alternate delivery schedule is proposed, the Contractor shall describe in a letter to the TPO, APO, and the Contracting Officer why he/she is unable to meet the delivery schedule listed in this section. The TPO/APO will not grant an extension for greater than 14 days for the Contractor's response letter to the laboratory evaluation sample report. The Contractor shall proceed and not assume that an extension will be granted until so notified by the TPO and/or APO.

If new SOPs are required to be written or SOPs are required to be amended because of the deficiencies and the subsequent corrective action implemented by the Contractor, the Contractor shall write/amend and submit the SOPs per the requirements listed in Exhibit E, Section IV.

2.3 Unacceptable Performance, Response Explaining Deficiency(ies) Required (Score less than 75 percent):

Deficiencies exist in the Contractor's performance to the extent that the National Program Office has determined that the Contractor has not demonstrated the capability to meet the contract requirements.

Within 14 days of receipt of notification from EPA, the Contractor shall describe the deficiency(ies) and the action(s) taken to correct the deficiency(ies) in a letter to the APO, TPO, and EMSL-LV.

An alternate delivery schedule may be proposed by the Contractor, but it is the sole decision of the Agency, represented either by the TPO or APO, to approve or disapprove the alternate delivery schedule. If an alternate delivery schedule is proposed, the Contractor shall describe in a letter to the TPO, APO, and the Contracting Officer why he/she is unable to meet the delivery schedule listed in this section. The TPO/APO will not grant an extension for greater than 14 days for the Contractor's response letter to the laboratory evaluation sample report.

If new SOPs are required to be written or SOPs are required to be amended because of the deficiencies and the subsequent corrective action implemented by the Contractor, the Contractor shall write/amend and submit the SOPs per the requirements listed in Exhibit E, Section IV.

The Contractor shall be notified by the TPO, APO, or Contracting Officer concerning the Contractor's remedy for the Contractor's unacceptable performance. A Contractor may expect, but the EPA is not limited to, the following actions: reduction of the number of samples sent under the contract, suspension of sample shipment to the Contractor, an on-site laboratory evaluation, a data package audit, remedial laboratory evaluation sample, and/or a contract sanction, such as a Cure Notice.

Note: A Contractor's prompt response demonstrating that corrective actions has been taken to ensure the Contractor's capability to meet contract requirements will facilitate continuation of sample scheduling.

If the Contractor fails to adhere to the requirements listed in this section, the Contractor may expect, but the Agency is not limited to the following actions: reduction of numbers of samples sent under the contract, suspension of sample shipment to the Contractor, data package audit, an on-site laboratory evaluation, remedial laboratory evaluation sample, and/or contract sanctions, such as a Cure Notice.

SECTION IX

DATA PACKAGE AUDITS

1 Overview

Data package audits are performed by the Agency for program overview and specific Regional concerns. Standardized procedures have been established to assure uniformity of the auditing process. Data packages are periodically selected from recently received cases. They are evaluated for the technical quality of hardcopy raw data, quality assurance, and the adherence to contractual requirements. This function provides external monitoring of program QC requirements.

Data package audits are used to assess the technical quality of the data and evaluate overall laboratory performance. They provide the Agency with an in-depth inspection and evaluation of the Case data package with regard to achieving QA/QC acceptability. A thorough review of the raw data is completed including: a check of instrument printouts, quantitation reports, chromatograms, deviations from the contractual requirements, a check for transcription and calculation errors, a review of the qualifications of the laboratory personnel involved with the case, and a review of all current SOPs on file.

2 Responding to the Data Package Audit Report:

After completion of the data package audit, the Agency may send a copy of the data package audit report to the Contractor or may discuss the data package audit report during an on-site laboratory evaluation. In a detailed letter to the TPO, APO, and EMSL-LV, the Contractor shall discuss the corrective actions implemented to resolve the deficiencies listed in the data package audit report within 14 days of receipt of the report. An alternate delivery schedule may be proposed by the Contractor, but it is the sole decision of the Agency, represented either by the TPO or APO, to approve or disapprove the alternate delivery schedule. If an alternate delivery schedule is proposed, the Contractor shall describe in a letter to the TPO, APO, and the Contracting Officer why he/she is unable to meet the delivery schedule listed in this section. The TPO/APO will not grant an extension for greater than 14 days for the Contractor's response letter to the laboratory evaluation sample report. The Contractor shall proceed and not assume that an extension will be granted until so notified by the TPO and/or APO.

If new SOPs are required to be written or SOPs are required to be amended because of the deficiencies and the subsequent corrective action implemented by the Contractor, the Contractor shall write/amend and submit the SOPs per the requirements listed in Exhibit E, Section IV.

3 Corrective Actions

If the Contractor fails to adhere to the requirements listed in this section, the Contractor may expect, but the Agency is not limited to the following actions: reduction of numbers of samples sent under the contract, suspension of sample shipment to the Contractor, data package audit, an on-site laboratory evaluation, remedial laboratory evaluation sample, and/or contract sanctions, such as a Cure Notice.

SECTION X

ON-SITE LABORATORY EVALUATIONS

1 Overview

At a frequency dictated by a contract laboratory's performance, the APO or his/her authorized representative will conduct an on-site laboratory evaluation. On-site laboratory evaluations are carried out to monitor the Contractor's ability to meet selected terms and conditions specified in the contract. The evaluation process incorporates two separate categories: Quality Assurance Evaluation and an Evidentiary Audit.

2 Quality Assurance On-Site Evaluation

Quality assurance evaluators inspect the Contractor's facilities to verify the adequacy and maintenance of instrumentation, the continuity of personnel meeting training requirements, and the acceptable performance of analytical and QC procedures. The Contractor should expect that items to be monitored will include, but not be limited to, the following items:

- Size and appearance of the facility;
- Quantity, age, availability, scheduled maintenance and performance of instrumentation;
- Availability, appropriateness, and utilization of the QAP and SOPs;
- Staff qualifications, experience, and personnel training programs;
- Reagents, standards, and sample storage facilities;
- Standard preparation logbooks and raw data;
- Bench sheets and analytical logbook maintenance and review; and
- Review of the Contractor's sample analysis/data package inspection/data management procedures.

Prior to an on-site evaluation, various documents pertaining to performance of the specific Contractor are integrated in a profile package for discussion during the evaluation. Items that may be included are previous on-site reports, laboratory evaluation sample scores, Regional review of data, Regional QA materials, data audit reports, and data trend reports.

3 Evidentiary Audit

Evidence auditors conduct an on-site laboratory evaluation to determine if laboratory policies and procedures are in place to satisfy evidence handling requirements as stated in Exhibit F. The evidence audit is comprised of the following three activities.

3.1 Procedural Audit:

The procedural audit consists of review and examination of actual SOPs and accompanying documentation for the following laboratory operations: sample receiving, sample storage, sample identification, sample security, sample tracking (from receipt to completion of analysis) and analytical project file organization and assembly.

3.2 Written SOPs Audit:

The written SOPs audit consists of review and examination of the written SOPs to determine if they are accurate and complete for the following laboratory operations: sample receiving, sample storage, sample identification, sample security, sample tracking (from receipt to completion of analysis) and analytical project file organization and assembly.

3.3 Analytical Project File Evidence Audit:

The analytical project file evidence audit consists of review and examination of the analytical project file documentation. The auditors review the files to determine:

- The accuracy of the document inventory;
- The completeness of the file;
- The adequacy and accuracy of the document numbering system;
- Traceability of sample activity;
- Identification of activity recorded on the documents; and
- Error correction methods.

4 Discussion of the On-Site Team's Findings

During the debriefing, the auditors present their findings and recommendations for corrective actions necessary to the Contractor personnel.

5 Corrective Action Reports For Follow-Through to Quality Assurance and Evidentiary Audit Reports

5.1 On-Site Laboratory Evaluation

Following an on-site evaluation, quality assurance and/or evidentiary audit reports which discuss deficiencies found during the on-site evaluation may be sent to the Contractor. In a detailed letter, the Contractor shall discuss the corrective actions implemented to resolve the deficiencies discussed during the on-site evaluation and discussed in the reports to the TPO, APO, EMSL-LV (response to the quality assurance report), and NEIC (response to the evidentiary report) within 14 days of receipt of the finding or within the time agreed upon between the APO/TPO and the Contractor. An alternate delivery schedule may be proposed by the Contractor, but it is the sole decision of the Agency, represented either by the TPO or APO, to approve or disapprove the alternate delivery schedule. If an alternate delivery schedule is proposed, the Contractor shall describe in a letter to the TPO, APO, and the Contracting Officer why he/she is unable to meet the delivery schedule listed in this section. The TPO/APO will not grant an extension for greater than 14 days for the Contractor's response letter to the laboratory evaluation sample report. The Contractor shall proceed and not assume that an extension will be granted until so notified by the TPO and/or APO.

If new SOPs are required to be written or SOPs are required to be amended because of the deficiencies and the subsequent corrective action implemented by the Contractor, the Contractor shall write/amend and submit the SOPs per the requirements listed in Exhibit E, Section IV.

5.2 Corrective Actions

If the Contractor fails to adhere to the requirements listed in this section, the Contractor may expect, but the Agency is not limited to the following actions: reduction of numbers of samples sent under the contract, suspension of sample shipment to the Contractor, data package audit, an on-site laboratory evaluation, remedial laboratory evaluation sample, and/or contract sanctions, such as a Cure Notice.

SECTION XI

QUALITY ASSURANCE AND DATA TREND ANALYSIS

1 Overview

Data submitted by laboratories are subject to review from several aspects: compliance with contract-required QC, useability, and full data package evaluation. Problems resulting from any of these reviews may determine the need for a on-site laboratory evaluation and/or a remedial PE sample. In addition, QC prescribed in the methods provides information that is continually used by the Agency to assess sample data quality, Contractor data quality, and Program data quality via data trend analysis. Trend analysis is accomplished by entering data into a computerized data base. Statistical reports that evaluate specific anomalies or disclose trends in many areas, including the following, are generated from this data base:

- System Monitor Compound Spike Recovery;
- Laboratory Control Sample Recovery;
- Method Blanks;
- Initial Calibration and Calibration Check Data; and
- Other QC and Method Parameters.

2 Program Benefits

Program-wide statistical results are used to rank laboratories in order to observe the relative performance of each Contractor in a given protocol against its peers. The reports are also used to identify trends within laboratories. The results of many of these trend analyses are included in overall evaluation of a Contractor's performance, and are reviewed to determine if corrective action or an on-site laboratory evaluation is indicated in order to meet the QA/QC requirements of the contract.

Contractor performance over time is monitored using these trend analysis techniques to detect departures of Contractor output from required or desired levels of quality control, and to provide an early-warning of Contractor QA/QC problems which may not be apparent from the results of an individual case.

As a further benefit to the Program, the database provides the information needed to establish performance-based criteria in updated analytical protocols, where advisory criteria have been previously used.

The vast empirical data set produced by contract laboratories is carefully analyzed, with the results augmenting theoretical and research-based performance criteria. The result is a continuously monitored set of quality control and performance criteria specifications depicting what is routinely achievable and expected of environmental chemistry laboratories in mass production analysis of environmental samples. This, in turn, assists the Agency in meeting its objectives of obtaining data of known and documented quality.

SECTION XII

DATA MANAGEMENT

1 Overview

Data management procedures are defined as procedures specifying the acquisition or entry, update, correction, deletion, storage and security of computer readable data and files. These procedures shall be in written form and contain a clear definition for all databases and files used to generate or resubmit deliverables. Key areas of concern include: system organization (including personnel and security), documentation operations, traceability, and quality control.

Data manually entered from hardcopy shall be quality controlled and the error rates estimated. Systems shall prevent entry of incorrect or out-of-range data and alert data entry personnel of errors. In addition, data entry error rates shall be estimated and recorded on a monthly basis by reentering a statistical sample of the data entered and calculating discrepancy rates by data element.

2 Documentation Requirements

The record of changes in the form of corrections and updates to data originally generated, submitted, and/or resubmitted shall be documented to allow traceability of updates. Documentation shall include the following for each change:

- Justification or rationale for the change.
- Initials of the person making the change or changes. Data changes shall be implemented and reviewed by a person (or group) independent of the source generating the deliverable.
- Change documentation shall be retained according to the schedule of the original deliverable.
- Resubmitted electronic data or other deliverables shall be reinspected as a part of the laboratories' internal inspection process prior to resubmission. The entire deliverable, not just the changes, shall be inspected.
- The Laboratory Manager shall approve changes to originally submitted deliverables.
- Documentation of data changes may be requested by laboratory auditors.

Lifecycle management procedures shall be applied to computer software systems developed by the laboratory to be used to generate and edit contract deliverables. Such systems shall be thoroughly tested and documented prior to utilization.

- A software test and acceptance plan including test requirements, test results and acceptance criteria shall be developed, followed, and available in written form.

- System changes shall not be made directly to production systems generating deliverables. Changes shall be made first to a development system and tested prior to implementation.

- Each version of the production system will be given an identification number, date of installation, date of last operation, and archived.

- System and operations documentation shall be developed and maintained for each system. Documentation shall include a users manual and an operations and maintenance manual.

- This documentation shall be available for on-site review and/or upon written request by the TPO or NEIC.

3 Responsibilities

Individual(s) responsible for the following functions shall be identified:

- System operation and maintenance including documentation and training.

- Data base integrity, including data entry, data updating, and quality control.

- Data and system security, backup, and archiving.

DRAFT

EXHIBIT F

CHAIN-OF-CUSTODY, DOCUMENT CONTROL, AND STANDARD OPERATING PROCEDURES

08/23/94

1.0 Sample Chain-of-Custody

A sample is physical evidence collected from a facility or from the environment. Controlling evidence is an essential part of the hazardous waste investigation effort. To accomplish this, Contractors are required to develop and implement the following sample identification, chain-of-custody, sample receiving, and sample tracking procedures.

1.1 Sample Identification

To assure traceability of the samples while in possession of the Contractor, the Contractor shall have a specified method for maintaining identification of samples throughout the laboratory.

Each sample and sample preparation container shall be labeled with the EPA number or a unique laboratory identifier. If a unique laboratory identifier is used, it shall be cross-referenced to the EPA number.

1.2 Chain-of-Custody Procedures

Because of the nature of the data being collected, the custody of EPA samples must be traceable from the time the samples are collected until they are introduced as evidence in legal proceedings. The Contractor shall have procedures ensuring that EPA sample custody is maintained and documented. A sample is under custody if:

- It is in your possession; or
- It is in your view after being in your possession; or
- It was in your possession and you locked it up; or
- It is in a designated secure area. (Secure areas shall be accessible only to authorized personnel.)

1.3 Sample Receiving Procedures

1.3.1 The Contractor shall designate a sample custodian responsible for receiving all samples.

1.3.2 The Contractor shall designate a representative to receive samples in the event that the sample custodian is not available.

1.3.3 The condition of the shipping containers and sample bottles shall be inspected upon receipt by the sample custodian or his/her representative.

1.3.4 The condition of the custody seals (intact/not intact) shall be inspected upon receipt by the sample custodian or his/her representative.

1.3.5 The sample custodian or his/her representative shall check for the presence or absence of the following documents accompanying the sample shipment:

- Airbills/airbill stickers;
- Custody seals;
- Quick Turnaround Method (QTM) Traffic Report/Chain-of-Custody (TR/COC) records;
- SAS packing lists, if applicable; and
- Sample tags.

1.3.6 The sample custodian or his/her representative shall sign and date all forms (e.g., QTM TR/COC records or packing lists, and airbills) accompanying the samples at the time of sample receipt.

1.3.7 The Contractor shall contact the Regional Program Manager (RPM) to resolve discrepancies and problems such as absent documents, conflicting information, broken custody seals, and unsatisfactory sample condition (e.g., leaking sample bottle). If the RPM is not available the Contractor shall contact the CLASS contractor.

1.3.8 The Contractor shall record the resolution of discrepancies and problems on Telephone Contact Logs.

1.3.9 The following information shall be recorded on Form DC-1 by the sample custodian or his/her representative as samples are received and inspected:

- Condition of the shipping container;
- Presence or absence and condition of custody seals on shipping and/or sample containers;
- Custody seal numbers, when present;
- Condition of the sample bottles;
- Presence or absence of airbills or airbill stickers;
- Airbill or airbill sticker numbers;

- Presence or absence of QTM TR/COC records;
- Presence or absence of EPA SAS packing lists;
- Presence or absence of sample tags;
- Sample tag identification numbers cross-referenced to the EPA sample numbers;
- Verification of agreement or non-agreement of information recorded on shipping documents and sample containers; and
- Problems or discrepancies.

1.4 Sample Tracking Procedures

The Contractor shall maintain records documenting all phases of sample handling from receipt to final analysis.

2.0 Document Control Procedures

The goal of the laboratory document control program is to assure that all documents for a specified Batch will be accounted for when the project is completed. Accountable documents used by contract laboratories shall include, but not be limited to, logbooks, QTM TR/COC records, sample work sheets, bench sheets, and other documents relating to the sample or sample analyses. The following document control procedures have been established to assure that all laboratory records are assembled and stored for delivery to EPA or are available upon request from EPA prior to the delivery schedule.

2.1 Preprinted Laboratory Forms and Logbooks

2.1.1 All documents produced by the Contractor which are directly related to the preparation and analysis of EPA samples shall become the property of the EPA and shall be placed in the Complete Batch file (CBF). All observations and results recorded by the laboratory but not on preprinted laboratory forms shall be entered into permanent laboratory logbooks. When all data from a Batch are compiled, all original laboratory forms and copies of all Batch-related logbook entries shall be included in the documentation package.

2.1.2 The Contractor shall identify the activity recorded on all laboratory documents which are directly related to the preparation and analysis of EPA samples.

2.1.3 Pre-printed laboratory forms shall contain the name of the laboratory, the time of analysis (in military time), and be dated (month/day/year) and signed by the person responsible

for performing the activity at the time an activity is performed.

2.1.4 Logbook entries shall contain the time of analysis (in military time) and be dated (month/day/year) and signed by the person responsible for performing the activity at the time an activity is performed.

2.1.5 Logbook entries shall be in chronological order. Entries in logbooks, with the exception of instrument run logs and extraction logs, shall include only one Batch per page.

2.1.6 Pages in both bound and unbound logbooks shall be sequentially numbered.

2.1.7 Instrument run logs shall be maintained so as to enable a reconstruction of the run sequence of individual instruments.

Because the laboratory must provide copies of the instrument run logs to EPA, the laboratory may exercise the option of using only laboratory or EPA sample identification numbers in the logs for sample ID rather than government agency or commercial client names to preserve the confidentiality of commercial clients.

2.1.8 Corrections to supporting documents and raw data shall be made by drawing a single line through the error and entering the correct information. Corrections and additions to supporting documents and raw data shall be dated and initialed. No information shall be obliterated or rendered unreadable.

All notations shall be recorded in blue or black ink.

Unused portions of documents shall be "z'd" out.

2.1.9 The Contractor shall assign a numerical identifier to each electronic transfer of EPA data.

2.1.10 All data transferred using direct electronic transfer technology to the data user shall be printed in hardcopy and filed in the CBF. The Contractor shall record the following information on the hardcopy or on a separate piece of paper attached to the hardcopy, as well as a sequentially-numbered logbook:

- The laboratory individual responsible for the electronic transfer;
- The date and time of the electronic data transfer;

- The individual for whom the data was electronically transferred;
- The status of the data that was electronically transferred (e.g., first submittal or second submittal); and
- The numerical identifier of the electronic transfer.

2.1.11 If an RPM authorizes the Contractor to transmit preliminary form I or raw data to the data user via a fax (or facs) machine, then the Contractor shall:

- Assign a numerical identifier to each fax;
- File the fax originals in the CBF;
- Record the information identified in paragraph 2.1.10 on the fax originals;
- Record the fax transfer of EPA data in a sequentially-numbered logbook; and
- Record the authorization information (e.g., Regional Program Manager's name, date, time, and reason for facsimile transmission).

2.2 Consistency of Documentation

The Contractor shall assign a Document Control Officer (DCO) responsible for the organization and assembly of the CBF.

All copies of laboratory documents shall be complete and legible.

Original documents which include information relating to more than one Batch shall be filed in the CBF of the lowest batch number. The copy(ies) shall be placed in the other CBF(s) and the Contractor shall record the following information on the copy(ies) in red ink:

"COPY"

"ORIGINAL IS FILED IN CBF _____"

The Contractor shall sign and date this addition to the copy(ies).

Before releasing analytical results, the DCO shall assemble and cross-check the information on samples tags, custody records, laboratory bench sheets, personal and instrument logs, and other relevant deliverables to ensure that data pertaining to each particular sample or Batch is consistent throughout the CBF.

2.3 Document Numbering and Inventory Procedure

In order to provide document accountability of the completed analysis records, each item in the CBF shall be inventoried and assigned a serialized number as described in Exhibit B.

All documents relevant to each sample Batch, including logbook pages, bench sheets, chromatograms, re-preparation records, reanalysis records, records of failed or attempted analysis, custody records, etc., shall be inventoried.

The DCO shall be responsible for ensuring that all documents generated are placed in the CBF for inventory and are delivered to the appropriate EPA Region or other receiver as designated by EPA. The DCO shall place the sample tags in plastic bags in the file.

2.4 Storage of EPA Files

The Contractor shall maintain EPA laboratory documents in a secure location.

2.5 Shipment of Hardcopy Data Deliverables

2.5.1 The Contractor shall document shipment of hardcopy deliverables packages to the recipients. These shipments require custody seals on the containers placed such that they cannot be opened without damaging or breaking the seal. The Contractor shall document what was sent, to whom, the date, and the method (carrier) used.

A copy of the transmittal letter for the CBF shall be sent to NEIC/CEAT and the CLASS contractor.

2.5.2 Authorized Alternative Transfer Methods

If the Regional Program Manager authorizes the Contractor to transfer EPA data to the data user by mailing the diskette rather than via direct electronic transfer technology, then the Contractor shall follow the procedures described in the above paragraph 2.5.

3.0 <u>Specifications For Written Standard Operating Procedures</u>

The Contractor shall have written standard operating procedures (SOPs) for receipt of samples, maintenance of custody, sample identification, sample storage, sample tracking, and assembly of completed data.

An SOP is defined as a written narrative step-wise description of laboratory operating procedures including examples of laboratory documents. The SOPs shall accurately describe the actual procedures used in the laboratory, and copies of the written SOPs shall be

available to the appropriate laboratory personnel. These procedures are necessary to ensure that analytical data produced under this contract are acceptable for use in EPA enforcement case preparation and litigation. The Contractor's SOPs shall provide mechanisms and documentation to meet each of the following specifications and shall be used by EPA as the basis for laboratory evidence audits.

3.1 The Contractor shall have written SOPs describing the sample custodian's duties and responsibilities.

3.2 The Contractor shall have written SOPs for receiving and logging in of the samples. The procedures shall include but not be limited to documenting the following information:

- Presence or absence of QTM TR/COC records;
- Presence or absence of airbills/airbill stickers;
- Presence or absence of SAS packing lists, if applicable;
- Presence or absence of custody seals on shipping and/or sample containers and their condition;
- Custody seal numbers, when present;
- Airbill or airbill sticker numbers;
- Presence or absence of sample tags;
- Sample tag ID numbers;
- Condition of the shipping container;
- Condition of the sample bottles;
- Verification of agreement or non-agreement of information on receiving documents and sample containers;
- Resolution of problems or discrepancies with the CLASS contractor; and
- The definition of any terms used to describe sample condition upon receipt (e.g., good, fine, ok).

3.3 The Contractor shall have written SOPs for maintaining identification of EPA samples throughout the laboratory.

If the Contractor assigns unique laboratory identifiers, written SOPs shall include a description of the method used to assign the unique laboratory identifier and cross-reference to the EPA sample number.

If the Contractor uses prefixes or suffixes in addition to sample identification numbers, the written SOPs shall include their definitions.

3.4 The Contractor shall have written SOPs describing all storage areas for samples in the laboratory. The SOPs shall include a list of authorized personnel who have access or keys to secure storage areas.

3.5 The Contractor shall have written SOPs describing the method by which the laboratory maintains samples under custody.

3.6 The Contractor shall have written SOPs describing the method by which the laboratory maintains the security of any areas identified as secure.

3.7 The Contractor shall have written SOPs for tracking the work performed on any particular sample. The tracking SOP shall include:

- A description of the documents used to record sample receipt, sample storage, sample transfers, sample preparations, and sample analyses;
- A description of the documents used to record calibration and QA/QC laboratory work;
- Examples of document formats and laboratory documents used in the sample receipt, sample storage, sample transfer, and sample analyses; and
- A narrative step-wise description of how documents are used to track samples.

3.8 The Contractor shall have written SOPs for the following procedures related to the laboratory computer system used for data accumulation and the direct electronic transfer of EPA data.

- Defined security measures which limit access to the computer system to authorized personnel.
- Recording the access and use of the computer system by authorized personnel.
- Assigning sequential numerical identifiers to each electronic transfer of EPA data.
- Preparing a hardcopy of the electronically transferred data.
- Ensuring that the hardcopy is placed in the CBF.
- Recording the following information on the hardcopy or on a separate piece of paper attached to the hardcopy, as well as in a sequentially numbered logbook:

- The laboratory individual responsible for the electronic transfer;

- The date and time of the electronic data transfer;

- The individual for whom the data was electronically transferred;

- The status of the data that was electronically transferred; and

- The numerical identifier of the electronic transfer.

3.9 The Contractor shall have written SOPs for the use of a fax machine to transmit EPA data or preliminary form I or raw data results to the data user. The written SOPs shall include the following.

- Assigning a numerical identifier to each fax;

- Filing of fax originals in the CBF;

- Recording the information identified in paragraph 2.1.10 on the fax originals;

- Recording the fax transfer of EPA data in a sequentially numbered logbook as described in paragraph 2.1.11; and

- Recording the authorization information (e.g., Project Officer's name, date, time, and reason for facsimile transmission).

3.10 The Contractor shall have written SOPs for organization and assembly of all documents relating to each Batch. Documents shall be filed on a batch-specific basis. The procedures shall ensure that all documents including logbook pages, sample tracking records, chromatograms, computer printouts, raw data summaries, correspondence, and any other written documents having reference to the Batch are compiled in one location for submission to EPA. The written SOPs shall include:

- A description of the numbering and inventory method;

- A description of the method used by the laboratory to verify consistency and completeness of the CBF; and

- Procedures for the shipment of deliverables packages using custody seals.

4.0 <u>Handling Of Confidential Information</u>

A Contractor conducting work under this contract may receive EPA-designated confidential information from the Agency. Confidential information must be handled separately from other documentation

developed under this contract. To accomplish this, the following procedures for the handling of confidential information have been established.

4.1 All confidential documents shall be under the supervision of a designated DCO.

4.2 Confidential Information

Any samples or information received with a request of confidentiality shall be handled as "confidential." A separate locked file shall be maintained to store this information and shall be segregated from other nonconfidential information. Data generated from confidential samples shall be treated as confidential. Upon receipt of confidential information, the DCO will log these documents into a Confidential Inventory Log. The information will then be available to authorized personnel but only after it has been signed out to that person by the DCO. The documents shall be returned to the locked file at the conclusion of each working day. Confidential information may not be reproduced except upon approval by the EPA APO. The DCO will enter all copies into the document control system described above. In addition, this information may not be disposed of except upon approval by the EPA APO. The DCO shall remove and retain the cover page of any confidential information disposed of for one year and shall keep a record on the disposition in the Confidential Inventory Log.

DRAFT

EXHIBIT G

GLOSSARY OF TERMS AND ACRONYM LIST

08/23/94

TABLE OF CONTENTS

PAGE

SECTION I: GLOSSARY OF TERMS G-3

SECTION II: ABBREVIATIONS AND ACRONYMS G-8

SECTION I

GLOSSARY OF TERMS

ALIQUOT - a measured portion of a sample taken for analysis.

ANALYSIS DATE/TIME - the date and military time of the injection of the sample, standard, or blank into the GC system.

ANALYTICAL SEQUENCE - an analysis sequence consisting of an initial calibration or a daily calibration check standard, method blank(s), laboratory control sample(s) (LCS), field sample(s), instrument blanks, and a performance verification standard(s). There are two types of analytical sequences: an initial calibration analytical sequence and a daily calibration check analytical sequence. An analytical sequence must not exceed 24 hours.

AQUEOUS NON-MISCIBLE OIL SAMPLE - Oil sample that is not miscible with water.

AQUEOUS MISCIBLE OIL SAMPLE - Oil sample that is miscible with water.

BATCH - a unit within a sample Case that is used to identify a group of samples for delivery. A Batch is a group of field samples (up to 30 fractional analysis) within a Case received in one day. Data from all samples in a Batch are due concurrently within the specified turnaround time.

BLANK - for the purpose of this SOW, there are three required blanks: method, instrument, and cleanup. All protocols (i.e., volatile, PAH, phenol, pesticide, and PCB) require method and instrument blanks. A method blank must be performed with each Batch, for each sample fraction, and for each matrix. In addition, the pesticide and PCB protocols require the analysis of a cleanup blank if the optional sulfur cleanup step is employed. Also, an additional method blank shall be analyzed along with samples that are filtered.

CALIBRATION CHECK - a check standard analyzed at the start of each daily analytical sequence to determine if the initial calibration is still valid.

CALIBRATION FACTOR - the total area of a peak(s) divided by the mass injected (in nanograms).

CASE - a finite, usually predetermined number of samples collected over a given time period from a particular site. Case numbers are assigned by the Sample Management Office. A Case consists of one or more Batches.

CLP Analytical Services Support (CLASS) contractor - At times during the length of this contract, the CLASS contractor acting on behalf of the Headquarters APO and/or Regional TPO, will provide directions to the Contractors.

CLEANUP BLANK- 1 ml of hexane carried through the pesticide or PCB sulfur cleanup procedures to determine whether contamination was introduced during cleanup.

CONTRACT REQUIRED QUANTITATION LIMIT (CRQL) - target compound quantitation limits as specified in Exhibit C.

CONTRACTOR - synonymous with Laboratory as used herein.

DAY - unless otherwise specified, day shall mean calendar day.

DATA SYSTEM - for the purpose of this SOW, an integrator/computer system that allows the continuous acquisition and printout of time vs. intensity data throughout the chromatographic program.

DILUTION FACTOR - a dilution factor (i.e., a single whole number, such as "100" for a 1 to 100 dilution of a sample) must be reported for all samples which are diluted. A sample dilution considers all factors which affect the sample CRQL. Some common examples include: extraction or analysis of a smaller sample aliquot; dilution of a sample or sample extract; and dilution of a smaller aliquot of a methanol extract for volatiles analysis.

ELECTRON CAPTURE DETECTOR (ECD) - detector used in the analysis for pesticides and PCBs in this SOW.

ELECTROLYTIC CONDUCTIVITY DETECTOR (ELCD OR HALL) - detector used in series with photo-ionization detector (PID) in the analysis for volatile organics in this SOW.

EASTERN STANDARD TIME (EST) or EASTERN TIME - the time of the fifth time zone west of Greenwich that includes the eastern U.S.

EXTERNAL STANDARDS - Target compounds analyzed at a known concentration prior to sample analysis to determine calibration factors.

FLAME IONIZATION DETECTOR (FID) - detector used in the analysis for PAHs and phenols in this SOW.

GOVERNMENT - the terms Government and Agency are used synonymously in this SOW and refers to the US Government or the US Environmental Protection Agency (EPA).

HEATED HEADSPACE SAMPLER - device for sampling the headspace gases and for use in direct injection GC volatiles analysis.

HIGH LEVEL SAMPLES - field samples that contain target compounds at concentration levels that exceed twice the high calibration standard and/or interferents that are detected at levels greater than the mid level initial calibration standard concentration response of the nearest target compound.

IN-HOUSE - at the Contractor's facility.

INITIAL CALIBRATION - Analysis of three analytical standards at the beginning of the contract and whenever specific quality control criteria are not met. Initial calibration defines the linear and dynamic range of response of the instrument to the target compounds.

INSTRUMENT BLANK - reagent water (for volatiles) or solvent (for PAH, phenols, pesticides, and PCBs) analyzed to determine whether carry-over from a previous sample has occurred.

LABORATORY - synonymous with Contractor as used herein.

LABORATORY CONTROL SAMPLE (LCS) - sample prepared and fortified (spiked) with known quantities of specific compounds and subjected to the entire analytical procedure by the Contractor in order to assess the accuracy of the method and to demonstrate that the analytical system is in control and producing consistent data.

MATRIX - the predominant material of which the sample to be analyzed is composed. For the purpose of this SOW, the sample matrix is either water, soil/solid, oil, or wipe.

METHANOL NON-MISCIBLE OIL SAMPLE - Oil sample that is not miscible with methanol. Used synonymously with methanol extractable oil sample.

METHANOL MISCIBLE OIL SAMPLE - Oil sample that is miscible with methanol. Used synonymously with methanol non-extractable oil sample.

METHOD BLANK - an analytical control consisting of all reagents and the SMC carried through the same analytical procedures as the field samples. The method blank is used to define the level of laboratory background contamination.

NARRATIVE (Batch Narrative) - portion of the electronic deliverables and hardcopy data package which includes laboratory, contract, Case, Batch, and sample number identification, and descriptive documentation of any problems encountered in processing the samples, along with corrective action taken and problem resolution. Complete Batch Narrative specifications are included in Exhibit B.

PERFORMANCE VERIFICATION STANDARD (PVS) - is two times (2x) the low concentration standard analyzed at least once during each analytical sequence to verify instrument performance. All samples must be bracketed by valid PVSs or a valid LCS and PVS.

PHOTO-IONIZATION DETECTOR (PID) - detector used in series with electrolytic conductivity detector (ELCD or HALL) in the analysis for volatile organics. The PID may also be used for the analysis of phenols in this SOW.

PROTOCOL - describes the exact procedures to be followed with respect to sample receipt and handling, analytical methods, data reporting and deliverables, and document control. Used synonymously with SOW.

QTM TARGET COMPOUND LIST (QTCL) - a list of compounds designated by the SOW (Exhibit C) for analysis.

Quick Turnaround Method (QTM) TRAFFIC REPORT/CHAIN-OF-CUSTODY (TR/COC) - an EPA sample identification form filled out by the sampler which accompanies the sample(s) during shipment to the laboratory and which documents sample condition and receipt by the laboratory.

REAGENT WATER - water in which a target compound or interferent does not produce a signal greater than one-half the response in the corresponding RRT window of the initial calibration low concentration standard.

REGIONAL PROGRAM MANAGER - Regional EPA official, such as the Regional Technical Project Officer (TPO) or Regional Site Manager. Regional Site Managers may be Site Assessment Managers (NPL listings), On-Scene Coordinators (emergency response(s)), or Remedial Project Manager (site remediations).

RECOVERY - a determination of the accuracy of the analytical procedure made by comparing measured values of a fortified (spiked) sample against the known spike values. Recovery is determined by the following equation:

$$\%Rec = \frac{\text{measured value}}{\text{known value}} \times 100\%$$

REANALYSIS - reanalysis of field and QC samples may be required if certain method specified QC criteria are not met or if sample dilutions are necessary. Reanalysis of samples for semivolatile components (PAH, phenols, pesticides, and Aroclors) may require the reanalysis of the original field and QC sample extract, reextraction of the original field and QC sample and reanalysis, reanalysis of QC sample solutions, and diluted field sample extract reanalysis. Reanalysis of samples for volatile components may require reanalysis of a new aliquot of the same field and QC sample (e.g., waters and soils), reextraction of the original field and QC sample and reanalysis (e.g., methanol extracted soil and oil samples), reanalysis of new QC samples, and diluted sample (e.g., water) or sample extract (e.g., methanol extracted soil and oil sample) reanalysis.

RELATIVE RETENTION TIME - the retention time of a given compound divided by the retention time of the retention time marker (SMC).

RESOLUTION (also termed percent valley) - the separation between peaks on a chromatogram, calculated by dividing the height of the valley between the peaks by the peak height of the smaller peak being resolved, multiplied by 100.

RETENTION TIME MARKER - standard compound (SMC) used to assess GC system stability by quantifying shifts in retention time for all analyses.

SAMPLE - a portion of material to be analyzed that is contained in single or multiple containers and identified by a unique sample number.

SAMPLE NUMBER (EPA Sample Number) - a unique identification number designated by EPA for each sample. The EPA sample number appears on the sample QTM TR/COC form which documents information on that sample.

SOLID PHASE EXTRACTION (SPE) - a procedure commonly utilizing a cartridge or disk containing a solid matrix coated with a bonded organic phase used to extract and cleanup field and QC water samples.

SOLVENT EXTRACTION - liquid-liquid and liquid-solid extraction procedures used to prepare field and QC samples.

STANDARD ANALYSIS - an analytical determination made with known quantities of target compounds; used to determine calibration factors, define identification windows, and establish linearity over the calibration range.

SYSTEM MONITOR COMPOUND (SMC) - a compound added to every blank, sample, laboratory control sample, and standard; used to evaluate analytical efficiency and stability by evaluating recovery and retention time shift. These compounds are typically brominated, fluorinated, isotopically labelled, or compounds not expected to be detected in environmental media.

TECHNICAL PROJECT OFFICER (TPO) - Regional official responsible for monitoring the technical requirements of the Laboratory's contract; the TPO is the first line of contact when the Laboratory requires technical assistance, and along with the Administrative Project Officer (APO), is the only person that can provide instructions or clarifications to the Laboratory regarding the SOW.

TELEFACSIMILE (fax or facs) - a system of transmitting and reproducing fixed graphic material (as printing) by means of signals transmitted over telephone lines.

TIME - when required to record time on any deliverable item, time shall be expressed as Military Time, i.e., a 24-hour clock.

VALIDATED TIME OF SAMPLE RECEIPT (VTSR) - the date and time on which a sample is received at the Contractor's facility, as recorded on the shipper's delivery receipt and QTM TR/COC Record. NOTE: The VTSR date/time is adjusted for samples received during non-routine working hours (see Exhibit A, Section III, paragraph 9.5, for details).

SECTION II

ABBREVIATIONS AND ACRONYMS

APO	Administrative Project Officer
CADRE	Computer-Aide Data Review and Evaluation
CBF	Complete Batch File
CCS	Contract Compliance Screening
CF	Calibration Factor
CLP	Contract Laboratory Program
CLASS	CLP Analytical Services Support
CRQL	Contract Required Quantitation Limit
%D	Percent Difference
DCO	Document Control Officer
DF	Dilution Factor
ECD	Electron Capture Detector
EDT	Electronic Data Transfer
ELCD	Electrolytic Conductivity Detector
EMSL-LV	Environmental Monitoring Systems Laboratory - Las Vegas
EPA	Environmental Protection Agency
EST	Eastern Standard Time
FAX or FACS	Telefacsimile
FID	Flame Ionization Detector
FSCC	Fused Silica Capillary Column
GC	Gas Chromatograph
IC	Initial Calibration
LCS	Laboratory Control Sample
NCC	National Computer Center
NEIC	National Enforcement Investigation Center
NPL	National Priorities List
OSC	On-Scene Coordinator
PAH	Polynuclear Aromatic Hydrocarbon
PCB	Polychlorinated Biphenyls
PE	Performance Evaluation
PEST	Pesticides
PHE	Phenols
PID	Photoionzation Detector
PRP	Potential Responsible Parties
PVS	Performance Verification Standard
QA	Quality Assurance
QAP	Quality Assurance Plan
QATS	Quality Assurance Technical Support
QC	Quality Control
QTCL	Quick Turnaround Target Compound List
QTM	Quick Turnaround Method
RAS	Routine Analytical Services
%REC	Percent Recovery
RPM	Regional Project Manager
RSCC	Regional Sample Control Center

%RSD	Percent Relative Standard Deviation
RT	Retention Time
RT %D	Retention Time Percent Difference
RRT	Relative Retention Time
RTS	Retention Time Shift
SAS	Special Analytical Services
SD	Standard Deviation
SMC	System Monitor Compound
SPE	Solid Phase Extraction
SOP	Standard Operating Procedure
SOW	Statement Of Work
TCL	Target Compound List
TPO	Technical Project Officer
TR/COC	Traffic Report/Chain-of-Custody
VOA	Volatiles
VTSR	Validated Time of Sample Receipt

EXHIBIT H

DATA DICTIONARY AND FORMAT FOR DATA DELIVERABLES IN COMPUTER-READABLE FORMAT

SECTION I

FORMAT A SPECIFICATIONS

1. DATE

Dates are to be YYMMDD format with all characters filled; no slashes, dashes, or spaces.

Example: March 19, 1989 will be expressed as "890319".

2. TIME

Times are to be expressed in HHMM format with all characters filled, no colon.

Example: 1:30 pm will be expressed as "1330".

3. CHARACTER

Character data are to be left-justified with all letters uppercase.

4. NUMERIC

Numeric data are to be right-justified without a positive sign (+), leading zeros, commas, or exponents. Right-justified, leading zeros not necessary, length includes decimal points and signs. Negative signing (-), although unlikely, will decrease the range of values by one order of magnitude.

Example: Numeric 6.3 will accommodate from -9.999 to 99.999.

5. SPECIAL CASES

CAS Registry Numbers are to be ten characters and left-justified with hyphens imbedded; leading zeros should not be inserted.

Example: 3-19-0 will be 3-19-0____.

6. FORM NUMBERS

Form numbers use three characters, the first character is a 'Q', the second character identifies the form type (1= Form QI, 2= Form QII, 3= Form QIII, 4= Form QIV, 5= Form QV, 6= Form QVI, and 7= Form QVII), and the third character denotes the fraction (A= VOA, B= PAH, C= Phenols, D= Pesticides, E= Aroclors).

SECTION II

QTM FORM FILE DESCRIPTION

FORM QI - VOA
VOLATILES ANALYSIS DATA SHEET

HEADER RECORD

COLUMN	LENGTH	CONTENTS	FORMAT/CONTENTS
1-3	3	Form number	"Q1A"
4-5	2	Form suffix	"AA" - "ZZ"
6-7	2	Record type	"H1"
8-19	12	EPA sample no.	Character
20-44	25	Lab name	Character
45-55	11	Contract	Character
56-61	6	Lab code	Character
62-66	5	Case no.	Character
67-74	8	Batch no.	Character
75-76	2	Sequence no.	Character
77-82	6	SAS no.	Character
83-92	10	Matrix	"SOIL/SOLID", "WATER", or specified other
93-104	12	Lab sample ID	Character
105-109	5	Sample wt/vol	Numeric 5.1
110-113	4	Sample wt/vol units	"G", "ML", other
114-118	5	Units	"UG/L", "UG/KG", or other
119-126	8	Dilution factor	Numeric 8.0
127-136	10	Instrument ID	Character
137-142	6	Date received	YYMMDD
143-146	4	Time received	HHMM
147-152	6	Date analyzed	YYMMDD
153-156	4	Time analyzed	HHMM
157	1	Quantitation type	Character (1, 2, or 3)
158-167	10	SMC CAS no.	Character
168-174	7	SMC concentration	Numeric 7.3
175-177	3	SMC % recovery	Numeric 3.0
178	1	SMC % rec out flag	"*" or blank
179-187	9	SMC area	Numeric 9.0
188-193	6	SMC RT	Numeric 6.3 (minutes)
194-199	6	SMC IC $\bar{RT}$	Numeric 6.3 (minutes)
200-204	5	RT %D	Numeric 5.1
205	1	SMC RT %D out flag	"*" or blank

FORM QI - VOA (Continued)
VOLATILES ANALYSIS DATA SHEET

DETAIL RECORD

COLUMN	LENGTH	CONTENTS	FORMAT/CONTENTS
1-3	3	Form number	"Q1A"
4-5	2	Form suffix	"AA" - "ZZ"
6-7	2	Record type	"D1"
8-17	10	CAS no.	Character
18-30	13	Concentration	Numeric 13.3
31	1	"U" flag (non-detects)	"U" or blank
32-39	8	Qualifiers	Character
40-47	8	Reserved for EPA use	Character
48-53	6	RRT	Numeric 6.3
54	1	RRT flag	"*" or blank
55-60	6	IC $\overline{RRT}$ (STDS)	Numeric 6.3
61-66	6	RT	Numeric 6.3
67	1	RT flag	"*" or blank
68-73	6	IC $\overline{RT}$ (STDS)	Numeric 6.3

FORM QI - PAH
POLYNUCLEAR AROMATIC HYDROCARBONS ANALYSIS DATA SHEET

HEADER RECORD

COLUMN	LENGTH	CONTENTS	FORMAT/CONTENTS
1-3	3	Form number	"QIB"
4-5	2	Form suffix	"AA" - "ZZ"
6-7	2	Record type	"H1"
8-19	12	EPA sample no.	Character
20-44	25	Lab name	Character
45-55	11	Contract	Character
56-61	6	Lab code	Character
62-66	5	Case no.	Character
67-74	8	Batch no.	Character
75-76	2	Sequence no.	Character
77-82	6	SAS no.	Character
83-92	10	Matrix	"SOIL/SOLID", "WATER", or specified other
93-104	12	Lab sample ID	Character
105-109	5	Sample wt/vol	Numeric 5.1
110-113	4	Sample wt/vol units	"G", "ML", or other
114-118	5	Units	"UG/L", "UG/KG", other
119-126	8	Dilution factor	Numeric 8.0
127-136	10	Instrument ID	Character
137-142	6	Date received	YYMMDD
143-146	4	Time received	HHMM
147-152	6	Date analyzed	YYMMDD
153-156	4	Time analyzed	HHMM
157	1	Quantitation type	Character (1, 2, or 3)
158-164	7	Extraction type	"SOLVENT" or "SPE"
165-174	10	SMC CAS no.	Character
175-181	7	SMC concentration	Numeric 7.3
182-184	3	SMC % recovery	Numeric 3.0
185	1	SMC % rec out flag	"*" or blank
186-194	9	SMC area	Numeric 9.0
195-200	6	SMC RT	Numeric 6.3 (minutes)
201-206	6	SMC IG $\overline{RT}$	Numeric 6.3 (minutes)
207-211	5	RT %D	Numeric 5.1
212	1	SMC RT %D out flag	"*" or blank

FORM QI - PAH (Continued)
POLYNUCLEAR AROMATIC HYDROCARBONS ANALYSIS DATA SHEET

DETAIL RECORD

COLUMN	LENGTH	CONTENTS	FORMAT/CONTENTS
1-3	3	Form number	"Q1B"
4-5	2	Form suffix	"AA" - "ZZ"
6-7	2	Record type	"D1"
8-17	10	CAS no.	Character, "COMBINEA" for coeluter
18-30	13	Concentration	Numeric 13.3
31	1	"U" flag (non-detects)	"U" or blank
32-39	8	Qualifiers	Character
40-47	8	Reserved for EPA use	Character
48-53	6	RRT	Numeric 6.3
54	1	RRT flag	"*" or blank
55-60	6	IC $\overline{RRT}$ (STDS)	Numeric 6.3
61-66	6	RT	Numeric 6.3
67	1	RT flag	"*" or blank
68-73	6	IC $\overline{RT}$ (STDS)	Numeric 6.3

FORM QI - PHE
PHENOLS ANALYSIS DATA SHEET

HEADER RECORD

COLUMN	LENGTH	CONTENTS	FORMAT/CONTENTS
1-3	3	Form number	"Q1C"
4-5	2	Form suffix	"AA" - "ZZ"
6-7	2	Record type	"H1"
8-19	12	EPA sample no.	Character
20-44	25	Lab name	Character
45-55	11	Contract	Character
56-61	6	Lab code	Character
62-66	5	Case no.	Character
67-74	8	Batch no.	Character
75-76	2	Sequence no.	Character
77-82	6	SAS no.	Character
83-92	10	Matrix	"SOIL/SOLID", "WATER", or specified other
93-104	12	Lab sample ID	Character
105-109	5	Sample wt/vol	Numeric 5.1
110-113	4	Sample wt/vol units	"G", "ML", or other
114-118	5	Units	"UG/L", "UG/KG", or other
119-126	8	Dilution factor	Numeric 8.0
127-136	10	Instrument ID	Character
137-142	6	Date received	YYMMDD
143-146	4	Time received	HHMM
147-152	6	Date analyzed	YYMMDD
153-156	4	Time analyzed	HHMM
157	1	Quantitation type	Character (1, 2, or 3)
158-164	7	Extraction type	"SOLVENT" or "SPE"
165-174	10	SMC CAS no.	Character
175-181	7	SMC concentration	Numeric 7.3
182-184	3	SMC % recovery	Numeric 3.0
185	1	SMC % rec out flag	"*" or blank
186-194	9	SMC area	Numeric 9.0
195-200	6	SMC RT	Numeric 6.3 (minutes)
201-206	6	SMC IC $\bar{RT}$	Numeric 6.3 (minutes)
207-211	5	RT %D	Numeric 5.1
212	1	SMC RT %D out flag	"*" or blank

FORM QI - PHE (Continued)
PHENOLS ANALYSIS DATA SHEET

DETAIL RECORD

COLUMN	LENGTH	CONTENTS	FORMAT/CONTENTS
1-3	3	Form number	"Q1C"
4-5	2	Form suffix	"AA" - "ZZ"
6-7	2	Record type	"D1"
8-17	10	CAS no.	Character, "COMBINED" and "COMBINEE" for coeluters
18-30	13	Concentration	Numeric 13.3
31	1	"U" flag (non-detects)	"U" or blank
32-39	8	Qualifiers	Character
40-47	8	Reserved for EPA use	Character
48-53	6	RRT	Numeric 6.3
54	1	RRT flag	"*" or blank
55-60	6	IC $\overline{RRT}$ (STDS)	Numeric 6.3
61-66	6	RT	Numeric 6.3
67	1	RT flag	"*" or blank
68-73	6	IC $\overline{RT}$ (STDS)	Numeric 6.3

FORM QI - PEST
PESTICIDES ANALYSIS DATA SHEET

HEADER RECORD

COLUMN	LENGTH	CONTENTS	FORMAT/CONTENTS
1-3	3	Form number	"Q1D"
4-5	2	Form suffix	"AA" - "ZZ"
6-7	2	Record type	"H1"
8-19	12	EPA sample no.	Character
20-44	25	Lab name	Character
45-55	11	Contract	Character
56-61	6	Lab code	Character
62-66	5	Case no.	Character
67-74	8	Batch no.	Character
75-76	2	Sequence no.	Character
77-82	6	SAS no.	Character
83-92	10	Matrix	"SOIL/SOLID" or "WATER"
93-104	12	Lab sample ID	Character
105-109	5	Sample wt/vol	Numeric 5.1
110-113	4	Sample wt/vol units	"G" or "ML"
114-118	5	Units	"UG/L" or "UG/KG"
119-126	8	Dilution factor	Numeric 8.0
127-136	10	Instrument ID	Character
137	1	Additional cleanup	"Y" or "N"
138-143	6	Date received	YYMMDD
144-147	4	Time received	HHMM
148-153	6	Date analyzed	YYMMDD
154-157	4	Time analyzed	HHMM
158	1	Quantitation type	Character (1, 2, or 3)
159-165	7	Extraction type	"SOLVENT" or "SPE"
166-175	10	SMC CAS no.	Character
176-182	7	SMC concentration	Numeric 7.3
183-185	3	SMC % recovery	Numeric 3.0
186	1	SMC % rec out flag	"*" or blank
187-195	9	SMC area	Numeric 9.0
196-201	6	SMC RT	Numeric 6.3 (minutes)
202-207	6	SMC IC $\overline{RT}$	Numeric 6.3 (minutes)
208-212	5	RT %D	Numeric 5.1
213	1	SMC RT %D out flag	"*" or blank

FORM QI - PEST (Continued)
PESTICIDES ANALYSIS DATA SHEET

DETAIL RECORD

COLUMN	LENGTH	CONTENTS	FORMAT/CONTENTS
1-3	3	Form number	"Q1D"
4-5	2	Form suffix	"AA" - "ZZ"
6-7	2	Record type	"D1"
8-17	10	CAS no.	Character, "COMBINEB" for coeluters
18-30	13	Concentration	Numeric 13.3
31	1	"U" flag (non-detects)	"U" or blank
32-39	8	Qualifiers	Character
40-47	8	Reserved for EPA use	Character
48-53	6	RRT	Numeric 6.3
54	1	RRT flag	"*" or blank
55-60	6	IC $\overline{RRT}$ (STDS)	Numeric 6.3
61-66	6	RT	Numeric 6.3
67	1	RT flag	"*" or blank
68-73	6	IC $\overline{RT}$ (STDS)	Numeric 6.3

FORM QI - PCB
AROCLORS ANALYSIS DATA SHEET

HEADER RECORD

COLUMN	LENGTH	CONTENTS	FORMAT/CONTENTS
1-3	3	Form number	"Q1E"
4-5	2	Form suffix	"AA" - "ZZ"
6-7	2	Record type	"H1"
8-19	12	EPA sample no.	Character
20-44	25	Lab name	Character
45-55	11	Contract	Character
56-61	6	Lab code	Character
62-66	5	Case no.	Character
67-74	8	Batch no.	Character
75-76	2	Sequence no.	Character
77-82	6	SAS no.	Character
83-92	10	Matrix	"SOIL/SOLID", "WATER", or specified other
93-104	12	Lab sample ID	Character
105-109	5	Sample wt/vol	Numeric 5.1
110-113	4	Sample wt/vol units	"G", "ML", or other
114-118	5	Units	"UG/L", "UG/KG", or other
119-126	8	Dilution factor	Numeric 8.0
127-136	10	Instrument ID	Character
137	1	Additional cleanup	"Y" or "N"
138-143	6	Date received	YYMMDD
144-147	4	Time received	HHMM
148-153	6	Date analyzed	YYMMDD
154-157	4	Time analyzed	HHMM
158	1	Quantitation type	Character (1, 2, or 3)
159-165	7	Extraction type	"SOLVENT" or "SPE"
166-175	10	SMC CAS no.	Character
176-182	7	SMC concentration	Numeric 7.3
183-185	3	SMC % recovery	Numeric 3.0
186	1	SMC % rec out flag	"*" or blank
187-195	9	SMC area	Numeric 9.0
196-201	6	SMC RT	Numeric 6.3 (minutes)
202-207	6	SMC TC RT	Numeric 6.3 (minutes)
208-212	5	RT %D	Numeric 5.1
213	1	SMC RT %D out flag	"*" or blank

DETAIL RECORD

COLUMN	LENGTH	CONTENTS	FORMAT/CONTENTS
1-3	3	Form number	"Q1E"
4-5	2	Form suffix	"AA" - "ZZ"
6-7	2	Record type	"D1"
8-17	10	CAS no.	Character
18-30	13	Concentration	Numeric 13.3
31	1	"U" flag (non-detects)	"U" or blank
32-39	8	Qualifiers	Character
40-47	8	Reserved for EPA use	Character

FORM QI - PCB (Continued)
AROCLORS ANALYSIS DATA SHEET

DETAIL RECORD

COLUMN	LENGTH	CONTENTS	FORMAT/CONTENTS
1-3	3	Form number	"Q1E"
4-5	2	Form suffix	"AA" - "ZZ"
6-7	2	Record type	"D2"
8-17	10	CAS no.	Character
18	1	Peak	Numeric 1.0
19-24	6	RRT	Numeric 6.3
25	1	RRT flag	"*" or blank
26-31	6	IC RRT (STDS)	Numeric 6.3
32-37	6	RT	Numeric 6.3
38	1	RT flag	"*" or blank
39-44	6	IC RT (STDS)	Numeric 6.3

FORM QII - VOA
VOLATILES LABORATORY CONTROL SAMPLE DATA SHEET

HEADER RECORD

COLUMN	LENGTH	CONTENTS	FORMAT/CONTENTS
1-3	3	Form number	"Q2A"
4-5	2	Form suffix	"AA" - "ZZ"
6-7	2	Record type	"H1"
8-32	25	Lab name	Character
33-43	11	Contract	Character
44-49	6	Lab code	Character
50-54	5	Case no.	Character
55-62	8	Batch no.	Character
63-64	2	Sequence no.	Character
65-70	6	SAS no.	Character
71-80	10	Instrument ID	Character
81-92	12	EPA sample no.	Character
93-104	12	Lab sample ID	Character
105-114	10	Matrix	"SOIL/SOLID", "WATER", or specified other
115-120	6	Date analyzed	YYMMDD
121-124	4	Time analyzed	HHMM
125-134	10	SMC CAS no.	Character
135-141	7	SMC concentration	Numeric 7.3
142-144	3	SMC % recovery	Numeric 3.0
145	1	SMC % rec out flag	"*" or blank
146-154	9	SMC area	Numeric 9.0
155-160	6	SMC RT	Numeric 6.3 (minutes)
161-166	6	SMC IC $\overline{RT}$	Numeric 6.3 (minutes)
167-171	5	RT %D	Numeric 5.1
172	1	SMC RT %D out flag	"*" or blank

DETAIL RECORD

COLUMN	LENGTH	CONTENTS	FORMAT/CONTENTS
1-3	3	Form number	"Q2A"
4-5	2	Form suffix	"AA" - "ZZ"
6-7	2	Record type	"D1"
8-17	10	CAS no.	Character, "COMBINEC" for coeluter
18-26	9	True concentration	Numeric 9.3
27-39	13	Obser. concentration	Numeric 13.3
40-42	3	% recovery	Numeric 3.0
43	1	% rec out flag	"*" or blank

FORM QII - PAH
POLYNUCLEAR AROMATIC HYDROCARBONS LABORATORY CONTROL SAMPLE DATA SHEET

HEADER RECORD

COLUMN	LENGTH	CONTENTS	FORMAT/CONTENTS
1-3	3	Form number	"Q2B"
4-5	2	Form suffix	"AA" - "ZZ"
6-7	2	Record type	"H1"
8-32	25	Lab name	Character
33-43	11	Contract	Character
44-49	6	Lab code	Character
50-54	5	Case no.	Character
55-62	8	Batch no.	Character
63-64	2	Sequence no.	Character
65-70	6	SAS no.	Character
71-80	10	Instrument ID	Character
81-92	12	EPA sample no.	Character
93-104	12	Lab sample ID	Character
105-114	10	Matrix	"SOIL/SOLID", "WATER", or specified other
115-121	7	Extraction type	"SOLVENT" or "SPE"
122-127	6	Date analyzed	YYMMDD
128-131	4	Time analyzed	HHMM
132-141	10	SMC CAS no.	Character
142-148	7	SMC concentration	Numeric 7.3
149-151	3	SMC % recovery	Numeric 3.0
152	1	SMC % rec out flag	"*" or blank
153-161	9	SMC area	Numeric 9.0
162-167	6	SMC RT	Numeric 6.3 (minutes)
168-173	6	SMC IC $\bar{RT}$	Numeric 6.3 (minutes)
174-178	5	RT %D	Numeric 5.1
179	1	SMC RT %D out flag	"*" or blank

DETAIL RECORD

COLUMN	LENGTH	CONTENTS	FORMAT/CONTENTS
1-3	3	Form number	"Q2B"
4-5	2	Form suffix	"AA" - "ZZ"
6-7	2	Record type	"D1"
8-17	10	CAS no.	Character, "COMBINEA" for coeluters
18-26	9	True concentration	Numeric 9.3
27-39	13	Observ. concentration	Numeric 13.3
40-42	3	% recovery	Numeric 3.0
43	1	% rec out flag	"*" or blank

FORM QII - PHE
PHENOLS LABORATORY CONTROL SAMPLE DATA SHEET

HEADER RECORD

COLUMN	LENGTH	CONTENTS	FORMAT/CONTENTS
1-3	3	Form number	"Q2C"
4-5	2	Form suffix	"AA" - "ZZ"
6-7	2	Record type	"H1"
8-32	25	Lab name	Character
33-43	11	Contract	Character
44-49	6	Lab code	Character
50-54	5	Case no.	Character
55-62	8	Batch no.	Character
63-64	2	Sequence no.	Character
65-70	6	SAS no.	Character
71-80	10	Instrument ID	Character
81-92	12	EPA sample no.	Character
93-104	12	Lab sample ID	Character
105-114	10	Matrix	"SOIL/SOLID", "WATER", or specified other
115-121	7	Extraction type	"SOLVENT" or "SPE"
122-127	6	Date analyzed	YYMMDD
128-131	4	Time analyzed	HHMM
132-141	10	SMC CAS no.	Character
142-148	7	SMC concentration	Numeric 7.3
149-151	3	SMC % recovery	Numeric 3.0
152	1	SMC % rec out flag	"*" or blank
153-161	9	SMC area	Numeric 9.0
162-167	6	SMC RT	Numeric 6.3 (minutes)
168-173	6	SMC IC RT	Numeric 6.3 (minutes)
174-178	5	RT %D	Numeric 5.1
179	1	SMC RT %D out flag	"*" or blank

DETAIL RECORD

COLUMN	LENGTH	CONTENTS	FORMAT/CONTENTS
1-3	3	Form number	"Q2C"
4-5	2	Form suffix	"AA" - "ZZ"
6-7	2	Record type	"D1"
8-17	10	CAS no.	Character, "COMBINED" and "COMBINEE" for coeluters
18-26	9	True concentration	Numeric 9.3
27-39	13	Obser. concentration	Numeric 13.3
40-42	3	% recovery	Numeric 3.0
43	1	% rec out flag	"*" or blank

FORM QII - PEST
PESTICIDES LABORATORY CONTROL SAMPLE DATA SHEET

HEADER RECORD

COLUMN	LENGTH	CONTENTS	FORMAT/CONTENTS
1-3	3	Form number	"Q2D"
4-5	2	Form suffix	"AA" - "ZZ"
6-7	2	Record type	"H1"
8-32	25	Lab name	Character
33-43	11	Contract	Character
44-49	6	Lab code	Character
50-54	5	Case no.	Character
55-62	8	Batch no.	Character
63-64	2	Sequence no.	Character
65-70	6	SAS no.	Character
71-80	10	Instrument ID	Character
81-92	12	EPA sample no.	Character
93-104	12	Lab sample ID	Character
105-114	10	Matrix	"SOIL/SOLID", "WATER", or specified other
115-121	7	Extraction type	"SOLVENT" or "SPE"
122-127	6	Date analyzed	YYMMDD
128-131	4	Time analyzed	HHMM
132-141	10	SMC CAS no.	Character
142-148	7	SMC concentration	Numeric 7.3
149-151	3	SMC % recovery	Numeric 3.0
152	1	SMC % rec out flag	"*" or blank
153-161	9	SMC area	Numeric 9.0
162-167	6	SMC RT	Numeric 6.3 (minutes)
168-173	6	SMC IC RT	Numeric 6.3 (minutes)
174-178	5	RT %D	Numeric 5.1
179	1	SMC RT %D out flag	"*" or blank

DETAIL RECORD

COLUMN	LENGTH	CONTENTS	FORMAT/CONTENTS
1-3	3	Form number	"Q2D"
4-5	2	Form suffix	"AA" - "ZZ"
6-7	2	Record type	"D1"
8-17	10	CAS no.	Character, "COMBINEB" for coeluters
18-26	9	True concentration	Numeric 9.3
27-39	13	Obser. concentration	Numeric 13.3
40-42	3	% recovery	Numeric 3.0
43	1	% rec out flag	"*" or blank

FORM QII - PCB
AROCLORS LABORATORY CONTROL SAMPLE DATA SHEET

HEADER RECORD

COLUMN	LENGTH	CONTENTS	FORMAT/CONTENTS
1-3	3	Form number	"Q2E"
4-5	2	Form suffix	"AA" - "ZZ"
6-7	2	Record type	"H1"
8-32	25	Lab name	Character
33-43	11	Contract	Character
44-49	6	Lab code	Character
50-54	5	Case no.	Character
55-62	8	Batch no.	Character
63-64	2	Sequence no.	Character
65-70	6	SAS no.	Character
71-80	10	Instrument ID	Character
81-92	12	EPA sample no.	Character
93-104	12	Lab sample ID	Character
105-114	10	Matrix	"SOIL/SOLID" or "WATER"
115-121	7	Extraction type	"SOLVENT" or "SPE"
122-127	6	Date analyzed	YYMMDD
128-131	4	Time analyzed	HHMM
132-141	10	SMC CAS no.	Character
142-148	7	SMC concentration	Numeric 7.3
149-151	3	SMC % recovery	Numeric 3.0
152	1	SMC % rec out flag	"*" or blank
153-161	9	SMC area	Numeric 9.0
162-167	6	SMC RT	Numeric 6.3 (minutes)
168-173	6	SMC IC $\bar{RT}$	Numeric 6.3 (minutes)
174-178	5	RT %D	Numeric 5.1
179	1	SMC RT %D out flag	"*" or blank

DETAIL RECORD

COLUMN	LENGTH	CONTENTS	FORMAT/CONTENTS
1-3	3	Form number	"Q2E"
4-5	2	Form suffix	"AA" - "ZZ"
6-7	2	Record type	"D1"
8-17	10	CAS no.	Character
18-26	9	True concentration	Numeric 9.3
27-39	13	Obser. concentration	Numeric 13.3
40-42	3	% recovery	Numeric 3.0
43	1	% rec out flag	"*" or blank

FORM QIII - VOA
VOLATILES PERFORMANCE VERIFICATION STANDARD DATA SHEET

HEADER RECORD

COLUMN	LENGTH	CONTENTS	FORMAT/CONTENTS
1-3	3	Form number	"Q3A"
4-5	2	Form suffix	"AA" - "ZZ"
6-7	2	Record type	"H1"
8-32	25	Lab name	Character
33-43	11	Contract	Character
44-49	6	Lab code	Character
50-54	5	Case no.	Character
55-62	8	Batch no.	Character
63-64	2	Sequence no.	Character
65-70	6	SAS no.	Character
71-80	10	Instrument ID	Character
81-92	12	EPA sample no.	Character
93-104	12	Lab sample ID	Character
105-110	6	Date analyzed	YYMMDD
111-114	4	Time analyzed	HHMM
115-124	10	SMC CAS no.	Character
125-131	7	SMC concentration	Numeric 7.3
132-134	3	SMC % recovery	Numeric 3.0
135	1	SMC % rec out flag	"*" or blank
136-144	9	SMC area	Numeric 9.0
145-150	6	SMC RT	Numeric 6.3 (minutes)
151-156	6	SMC IC $\overline{RT}$	Numeric 6.3 (minutes)
157-161	5	RT %D	Numeric 5.1
162	1	SMC RT %D out flag	"*" or blank

DETAIL RECORD

COLUMN	LENGTH	CONTENTS	FORMAT/CONTENTS
1-3	3	Form number	"Q3A"
4-5	2	Form suffix	"AA" - "ZZ"
6-7	2	Record type	"D1"
8-17	10	CAS no.	Character, "COMBINEC" for coeluter
18-26	9	True concentration	Numeric 9.3
27-39	13	Obser. concentration	Numeric 13.3
40-42	3	% recovery	Numeric 3.0
43	1	% rec out flag	"*" or blank
44-49	6	Resol. % valley	Numeric 6.2
50	1	Resol. % valley out flag	"*" or blank

FORM QIII - PAH
POLYNUCLEAR AROMATIC HYDROCARBONS PERFORMANCE VERIFICATION STANDARD DATA SHEET

HEADER RECORD

COLUMN	LENGTH	CONTENTS	FORMAT/CONTENTS
1-3	3	Form number	"Q3B"
4-5	2	Form suffix	"AA" - "ZZ"
6-7	2	Record type	"H1"
8-32	25	Lab name	Character
33-43	11	Contract	Character
44-49	6	Lab code	Character
50-54	5	Case no.	Character
55-62	8	Batch no.	Character
63-64	2	Sequence no.	Character
65-70	6	SAS no.	Character
71-80	10	Instrument ID	Character
81-92	12	EPA sample no.	Character
93-104	12	Lab sample ID	Character
105-110	6	Date analyzed	YYMMDD
111-114	4	Time analyzed	HHMM
115-124	10	SMC CAS no.	Character
125-131	7	SMC concentration	Numeric 7.3
132-134	3	SMC % recovery	Numeric 3.0
135	1	SMC % rec out flag	"*" or blank
136-144	9	SMC area	Numeric 9.0
145-150	6	SMC RT	Numeric 6.3 (minutes)
151-156	6	SMC IC $\overline{RT}$	Numeric 6.3 (minutes)
157-161	5	RT %D	Numeric 5.1
162	1	SMC RT %D out flag	"*" or blank

DETAIL RECORD

COLUMN	LENGTH	CONTENTS	FORMAT/CONTENTS
1-3	3	Form number	"Q3B"
4-5	2	Form suffix	"AA" - "ZZ"
6-7	2	Record type	"D1"
8-17	10	CAS no.	Character, "COMBINEA" for coeluters
18-26	9	True concentration	Numeric 9.3
27-39	13	Obser. concentration	Numeric 13.3
40-42	3	% recovery	Numeric 3.0
43	1	% rec out flag	"*" or blank
44-49	6	Resol. % valley	Numeric 6.2
50	1	Resol. % valley out flag	"*" or blank

FORM QIII - PHE
PHENOLS PERFORMANCE VERIFICATION STANDARD DATA SHEET

HEADER RECORD

COLUMN	LENGTH	CONTENTS	FORMAT/CONTENTS
1-3	3	Form number	"Q3C"
4-5	2	Form suffix	"AA" - "ZZ"
6-7	2	Record type	"H1"
8-32	25	Lab name	Character
33-43	11	Contract	Character
44-49	6	Lab code	Character
50-54	5	Case no.	Character
55-62	8	Batch no.	Character
63-64	2	Sequence no.	Character
65-70	6	SAS no.	Character
71-80	10	Instrument ID	Character
81-92	12	EPA sample no.	Character
93-104	12	Lab sample ID	Character
105-110	6	Date analyzed	YYMMDD
111-114	4	Time analyzed	HHMM
115-124	10	SMC CAS no.	Character
125-131	7	SMC concentration	Numeric 7.3
132-134	3	SMC % recovery	Numeric 3.0
135	1	SMC % rec out flag	"*" or blank
136-144	9	SMC area	Numeric 9.0
145-150	6	SMC RT	Numeric 6.3 (minutes)
151-156	6	SMC IC $\overline{RT}$	Numeric 6.3 (minutes)
157-161	5	RT %D	Numeric 5.1
162	1	SMC RT %D out flag	"*" or blank

DETAIL RECORD

COLUMN	LENGTH	CONTENTS	FORMAT/CONTENTS
1-3	3	Form number	"Q3C"
4-5	2	Form suffix	"AA" - "ZZ"
6-7	2	Record type	"D1"
8-17	10	CAS no.	Character, "COMBINED" and "COMBINEE" for coeluters
18-26	9	True concentration	Numeric 9.3
27-39	13	Obser. concentration	Numeric 13.3
40-42	3	% recovery	Numeric 3.0
43	1	% rec out flag	"*" or blank
44-49	6	Resol. % valley	Numeric 6.2
50	1	Resol. % valley out flag	"*" or blank

FORM QIII - PEST
PESTICIDES PERFORMANCE VERIFICATION STANDARD DATA SHEET

HEADER RECORD

COLUMN	LENGTH	CONTENTS	FORMAT/CONTENTS
1-3	3	Form number	"Q3D"
4-5	2	Form suffix	"AA" - "ZZ"
6-7	2	Record type	"H1"
8-32	25	Lab name	Character
33-43	11	Contract	Character
44-49	6	Lab code	Character
50-54	5	Case no.	Character
55-62	8	Batch no.	Character
63-64	2	Sequence no.	Character
65-70	6	SAS no.	Character
71-80	10	Instrument ID	Character
81-92	12	EPA sample no.	Character
93-104	12	Lab sample ID	Character
105-110	6	Date analyzed	YYMMDD
111-114	4	Time analyzed	HHMM
115-124	10	SMC CAS no.	Character
125-131	7	SMC concentration	Numeric 7.3
132-134	3	SMC % recovery	Numeric 3.0
135	1	SMC % rec out flag	"*" or blank
136-144	9	SMC area	Numeric 9.0
145-150	6	SMC RT	Numeric 6.3 (minutes)
151-156	6	SMC IC $\overline{RT}$	Numeric 6.3 (minutes)
157-161	5	RT %D	Numeric 5.1
162	1	SMC RT %D out flag	"*" or blank

DETAIL RECORD

COLUMN	LENGTH	CONTENTS	FORMAT/CONTENTS
1-3	3	Form number	"Q3D"
4-5	2	Form suffix	"AA" - "ZZ"
6-7	2	Record type	"D1"
8-17	10	CAS no.	Character
18-26	9	True concentration	Numeric 9.3
27-39	13	Obser. concentration	Numeric 13.3
40-42	3	% recovery	Numeric 3.0
43	1	% rec out flag	"*" or blank
44-49	6	Resol. % valley	Numeric 6.2
50	1	Resol. % valley out flag	"*" or blank

FORM QIII - PCB
AROCLORS PERFORMANCE VERIFICATION STANDARD DATA SHEET

HEADER RECORD

COLUMN	LENGTH	CONTENTS	FORMAT/CONTENTS
1-3	3	Form number	"Q3E"
4-5	2	Form suffix	"AA" - "ZZ"
6-7	2	Record type	"H1"
8-32	25	Lab name	Character
33-43	11	Contract	Character
44-49	6	Lab code	Character
50-54	5	Case no.	Character
55-62	8	Batch no.	Character
63-64	2	Sequence no.	Character
65-70	6	SAS no.	Character
71-80	10	Instrument ID	Character
81-92	12	EPA sample no.	Character
93-104	12	Lab sample ID	Character
105-110	6	Date analyzed	YYMMDD
111-114	4	Time analyzed	HHMM
115-124	10	SMC CAS no.	Character
125-131	7	SMC concentration	Numeric 7.3
132-134	3	SMC % recovery	Numeric 3.0
135	1	SMC % rec out flag	"*" or blank
136-144	9	SMC area	Numeric 9.0
145-150	6	SMC RT	Numeric 6.3 (minutes)
151-156	6	SMC IC $\overline{RT}$	Numeric 6.3 (minutes)
157-161	5	RT %D	Numeric 5.1
162	1	SMC RT %D out flag	"*" or blank

DETAIL RECORD

COLUMN	LENGTH	CONTENTS	FORMAT/CONTENTS
1-3	3	Form number	"Q3E"
4-5	2	Form suffix	"AA" - "ZZ"
6-7	2	Record type	"D1"
8-17	10	CAS no.	Character
18-26	9	True concentration	Numeric 9.3
27-39	13	Obser. concentration	Numeric 13.3
40-42	3	% recovery	Numeric 3.0
43	1	% rec out flag	"*" or blank
44-49	6	Resol. % valley	Numeric 6.2
50	1	Resol. % valley out flag	"*" or blank

FORM QIV - VOA
VOLATILES INITIAL CALIBRATION SHEET

HEADER RECORD

COLUMN	LENGTH	CONTENTS	FORMAT/CONTENTS
1-3	3	Form number	"Q4A"
4-5	2	Form suffix	"AA" - "ZZ"
6-7	2	Record type	"H1"
8-32	25	Lab name	Character
33-43	11	Contract	Character
44-49	6	Lab code	Character
50-54	5	Case no.	Character
55-62	8	Batch no.	Character
63-64	2	Sequence no.	Character
65-70	6	SAS no.	Character
71-80	10	Instrument ID	Character
81-92	12	CAL #1 EPA sample no.	Character
93-104	12	CAL #1 lab sample ID	Character
105-110	6	CAL #1 date	YYMMDD
111-114	4	CAL #1 time	HHMM
115-123	9	CAL #1 standard conc.	Numeric 9.0
124-135	12	CAL #2 EPA sample no.	Character
136-147	12	CAL #2 lab sample ID	Character
148-153	6	CAL #2 date	YYMMDD
154-157	4	CAL #2 time	HHMM
158-166	9	CAL #2 standard conc.	Numeric 9.0
167-178	12	CAL #3 EPA sample no.	Character
179-190	12	CAL #3 lab sample ID	Character
191-196	6	CAL #3 date	YYMMDD
197-200	4	CAL #3 time	HHMM
201-209	9	CAL #3 standard conc.	Numeric 9.0

DETAIL RECORD

COLUMN	LENGTH	CONTENTS	FORMAT/CONTENTS
1-3	3	Form number	"Q4A"
4-5	2	Form suffix	"AA" - "ZZ"
6-7	2	Record type	"D1"
8-17	10	CAS no.	Character, "COMBINEC" for coeluter
18-25	8	Low	Numeric 8.0
26-33	8	Mid	Numeric 8.0
34-41	8	High	Numeric 8.0
42-49	8	Mean CF	Numeric 8.0
50-54	5	% RSD	Numeric 5.1
55	1	% RSD flag	"*" or blank
56-61	6	Resol. % valley	Numeric 6.2
62	1	Resol. % valley out flag	"*" or blank
63-68	6	RT Low	Numeric 6.3
69-74	6	RT Mid	Numeric 6.3
75-80	6	RT High	Numeric 6.3
81-86	6	RT Mean	Numeric 6.3
87-92	6	RRT Low	Numeric 6.3
93-98	6	RRT Mid	Numeric 6.3
99-104	6	RRT High	Numeric 6.3
105-110	6	RRT Mean	Numeric 6.3

FORM QIV - PAH
POLYNUCLEAR AROMATIC HYDROCARBONS INITIAL CALIBRATION SHEET

HEADER RECORD

COLUMN	LENGTH	CONTENTS	FORMAT/CONTENTS
1-3	3	Form number	"Q4B"
4-5	2	Form suffix	"AA" - "ZZ"
6-7	2	Record type	"H1"
8-32	25	Lab name	Character
33-43	11	Contract	Character
44-49	6	Lab code	Character
50-54	5	Case no.	Character
55-62	8	Batch no.	Character
63-64	2	Sequence no.	Character
65-70	6	SAS no.	Character
71-80	10	Instrument ID	Character
81-92	12	CAL #1 EPA sample no.	Character
93-104	12	CAL #1 lab sample ID	Character
105-110	6	CAL #1 date	YYMMDD
111-114	4	CAL #1 time	HHMM
115-123	9	CAL #1 standard conc.	Numeric 9.0
124-135	12	CAL #2 EPA sample no.	Character
136-147	12	CAL #2 lab sample ID	Character
148-153	6	CAL #2 date	YYMMDD
154-157	4	CAL #2 time	HHMM
158-166	9	CAL #2 standard conc.	Numeric 9.0
167-178	12	CAL #3 EPA sample no.	Character
179-190	12	CAL #3 lab sample ID	Character
191-196	6	CAL #3 date	YYMMDD
197-200	4	CAL #3 time	HHMM
201-209	9	CAL #3 standard conc.	Numeric 9.0

DETAIL RECORD

COLUMN	LENGTH	CONTENTS	FORMAT/CONTENTS
1-3	3	Form number	"Q4B"
4-5	2	Form suffix	"AA" - "ZZ"
6-7	2	Record type	"D1"
8-17	10	CAS no.	Character, "COMBINEA" for coeluter
18-25	8	Low	Numeric 8.0
26-33	8	Mid	Numeric 8.0
34-41	8	High	Numeric 8.0
42-49	8	Mean CF	Numeric 8.0
50-54	5	% RSD	Numeric 5.1
55	1	% RSD flag	"*" or blank
56-61	6	Resol. % valley	Numeric 6.2
62	1	Resol. % valley out flag	"*" or blank
63-68	6	RT Low	Numeric 6.3
69-74	6	RT Mid	Numeric 6.3
75-80	6	RT High	Numeric 6.3
81-86	6	RT Mean	Numeric 6.3
87-92	6	RRT Low	Numeric 6.3
93-98	6	RRT Mid	Numeric 6.3
99-104	6	RRT High	Numeric 6.3
105-110	6	RRT Mean	Numeric 6.3

FORM QIV - PHE
PHENOLS INITIAL CALIBRATION SHEET

HEADER RECORD

COLUMN	LENGTH	CONTENTS	FORMAT/CONTENTS
1-3	3	Form number	"Q4C"
4-5	2	Form suffix	"AA" - "ZZ"
6-7	2	Record type	"H1"
8-32	25	Lab name	Character
33-43	11	Contract	Character
44-49	6	Lab code	Character
50-54	5	Case no.	Character
55-62	8	Batch no.	Character
63-64	2	Sequence no.	Character
65-70	6	SAS no.	Character
71-80	10	Instrument ID	Character
81-92	12	CAL #1 EPA sample no.	Character
93-104	12	CAL #1 lab sample ID	Character
105-110	6	CAL #1 date	YYMMDD
111-114	4	CAL #1 time	HHMM
115-123	9	CAL #1 standard conc.	Numeric 9.0
124-135	12	CAL #2 EPA sample no.	Character
136-147	12	CAL #2 lab sample ID	Character
148-153	6	CAL #2 date	YYMMDD
154-157	4	CAL #2 time	HHMM
158-166	9	CAL #2 standard conc.	Numeric 9.0
167-178	12	CAL #3 EPA sample no.	Character
179-190	12	CAL #3 lab sample ID	Character
191-196	6	CAL #3 date	YYMMDD
197-200	4	CAL #3 time	HHMM
201-209	9	CAL #3 standard conc.	Numeric 9.0

DETAIL RECORD

COLUMN	LENGTH	CONTENTS	FORMAT/CONTENTS
1-3	3	Form number	"Q4C"
4-5	2	Form suffix	"AA" - "ZZ"
6-7	2	Record type	"D1"
8-17	10	CAS no.	Character, "COMBINED" and "COMBINEE" for coeluters
18-25	8	Low	Numeric 8.0
26-33	8	Mid	Numeric 8.0
34-41	8	High	Numeric 8.0
42-49	8	Mean CF	Numeric 8.0
50-54	5	% RSD	Numeric 5.1
55	1	% RSD flag	"*" or blank
56-61	6	Resol. % valley	Numeric 6.2
62	1	Resol. % valley out flag	"*" or blank
63-68	6	RT Low	Numeric 6.3
69-74	6	RT Mid	Numeric 6.3
75-80	6	RT High	Numeric 6.3
81-86	6	RT Mean	Numeric 6.3
87-92	6	RRT Low	Numeric 6.3
93-98	6	RRT Mid	Numeric 6.3
99-104	6	RRT High	Numeric 6.3
105-110	6	RRT Mean	Numeric 6.3

FORM QIV - PEST
PESTICIDES INITIAL CALIBRATION SHEET

HEADER RECORD

COLUMN	LENGTH	CONTENTS	FORMAT/CONTENTS
1-3	3	Form number	"Q4D"
4-5	2	Form suffix	"AA" - "ZZ"
6-7	2	Record type	"H1"
8-32	25	Lab name	Character
33-43	11	Contract	Character
44-49	6	Lab code	Character
50-54	5	Case no.	Character
55-62	8	Batch no.	Character
63-64	2	Sequence no.	Character
65-70	6	SAS no.	Character
71-80	10	Instrument ID	Character
81-92	12	CAL #1 EPA sample no.	Character
93-104	12	CAL #1 lab sample ID	Character
105-110	6	CAL #1 date	YYMMDD
111-114	4	CAL #1 time	HHMM
115-123	9	CAL #1 standard conc.	Numeric 9.0
124-135	12	CAL #2 EPA sample no.	Character
136-147	12	CAL #2 lab sample ID	Character
148-153	6	CAL #2 date	YYMMDD
154-157	4	CAL #2 time	HHMM
158-166	9	CAL #2 standard conc.	Numeric 9.0
167-178	12	CAL #3 EPA sample no.	Character
179-190	12	CAL #3 lab sample ID	Character
191-196	6	CAL #3 date	YYMMDD
197-200	4	CAL #3 time	HHMM
201-209	9	CAL #3 standard conc.	Numeric 9.0

DETAIL RECORD

COLUMN	LENGTH	CONTENTS	FORMAT/CONTENTS
1-3	3	Form number	"Q4D"
4-5	2	Form suffix	"AA" - "ZZ"
6-7	2	Record type	"D1"
8-17	10	CAS no.	Character, "COMBINEB" for coeluter
18-25	8	Low	Numeric 8.0
26-33	8	Mid	Numeric 8.0
34-41	8	High	Numeric 8.0
42-49	8	Mean CF	Numeric 8.0
50-54	5	% RSD	Numeric 5.1
55	1	% RSD flag	"*" or blank
56-61	6	Resol. % valley	Numeric 6.2
62	1	Resol. % valley out flag	"*" or blank
63-68	6	RT Low	Numeric 6.3
69-74	6	RT Mid	Numeric 6.3
75-80	6	RT High	Numeric 6.3
81-86	6	RT Mean	Numeric 6.3
87-92	6	RRT Low	Numeric 6.3
93-98	6	RRT Mid	Numeric 6.3
99-104	6	RRT High	Numeric 6.3
105-110	6	RRT Mean	Numeric 6.3

FORM QIV - PCB
AROCLORS INITIAL CALIBRATION SHEET

HEADER RECORD

COLUMN	LENGTH	CONTENTS	FORMAT/CONTENTS
1-3	3	Form number	"Q4E"
4-5	2	Form suffix	"AA" - "ZZ"
6-7	2	Record type	"H1"
8-32	25	Lab name	Character
33-43	11	Contract	Character
44-49	6	Lab code	Character
50-54	5	Case no.	Character
55-62	8	Batch no.	Character
63-64	2	Sequence no.	Character
65-70	6	SAS no.	Character
71-80	10	Instrument ID	Character
81-86	6	RT Low	Numeric 6.3
87-92	6	RT Mid	Numeric 6.3
93-98	6	RT High	Numeric 6.3
99-104	6	RT Mean	Numeric 6.3

HEADER RECORD

COLUMN	LENGTH	CONTENTS	FORMAT/CONTENTS
1-3	3	Form number	"Q4E"
4-5	2	Form suffix	"AA" - "ZZ"
6-7	2	Record type	"H2"
8-19	12	CAL #1 EPA sample no.	Character
20-31	12	CAL #1 lab sample ID	Character
32-37	6	CAL #1 date	YYMMDD
38-41	4	CAL #1 time	HHMM
42-50	9	CAL #1 standard conc.	Numeric 9.0
51-62	12	CAL #2 EPA sample no.	Character
63-74	12	CAL #2 lab sample ID	Character
75-80	6	CAL #2 date	YYMMDD
81-84	4	CAL #2 time	HHMM
85-93	9	CAL #2 standard conc.	Numeric 9.0
94-105	12	CAL #3 EPA sample no.	Character
106-117	12	CAL #3 lab sample ID	Character
118-123	6	CAL #3 date	YYMMDD
124-127	4	CAL #3 time	HHMM
128-136	9	CAL #3 standard conc.	Numeric 9.0
137-148	12	toxaphene EPA sample no.	Character
149-160	12	toxaphene lab sample ID	Character
161-166	6	toxaphene date	YYMMDD
167-170	4	toxaphene time	HHMM
171-179	9	toxaphene standard conc.	Numeric 9.0

FORM QIV - PCB (Continued)
AROCLORS INITIAL CALIBRATION SHEET

HEADER RECORD

COLUMN	LENGTH	CONTENTS	FORMAT/CONTENTS
1-3	3	Form number	"Q4E"
4-5	2	Form suffix	"AA" - "ZZ"
6-7	2	Record type	"H3"
8-19	12	1221 EPA sample no.	Character
20-31	12	1221 lab sample ID	Character
32-37	6	1221 date	YYMMDD
38-41	4	1221 time	HHMM
42-50	9	1221 standard conc.	Numeric 9.0
51-62	12	1232 lab sample no.	Character
63-74	12	1232 lab sample ID	Character
75-80	6	1232 date	YYMMDD
81-84	4	1232 time	HHMM
85-93	9	1232 standard conc.	Numeric 9.0
94-105	12	1242 EPA sample no.	Character
106-117	12	1242 lab sample ID	Character
118-123	6	1242 date	YYMMDD
124-127	4	1242 time	HHMM
128-136	9	1242 standard conc.	Numeric 9.0
137-148	12	1248 EPA sample no.	Character
149-160	12	1248 lab sample ID	Character
161-166	6	1248 date	YYMMDD
167-170	4	1248 time	HHMM
171-179	9	1248 standard conc.	Numeric 9.0
180-191	12	1254 EPA sample no.	Character
192-203	12	1254 lab sample ID	Character
204-209	6	1254 date	YYMMDD
210-213	4	1254 time	HHMM
214-222	9	1254 standard conc.	Numeric 9.0

DETAIL RECORD

COLUMN	LENGTH	CONTENTS	FORMAT/CONTENTS
1-3	3	Form number	"Q4E"
4-5	2	Form suffix	"AA" - "ZZ"
6-7	2	Record type	"D1"
8-17	10	CAS no.	Character
18	1	Peak	Numeric 1.0
19-26	8	Low	Numeric 8.0
27-34	8	Mid	Numeric 8.0
35-42	8	High	Numeric 8.0
43-50	8	Mean CF	Numeric 8.0
51-55	5	% RSD	Numeric 5.1
56	1	% RSD flag	"*" or blank
57-62	6	Low RT	Numeric 6.3
63-68	6	Low RRT	Numeric 6.3

FORM QV - VOA
VOLATILES CALIBRATION CHECK SHEET

HEADER RECORD

COLUMN	LENGTH	CONTENTS	FORMAT/CONTENTS
1-3	3	Form number	"Q5A"
4-5	2	Form suffix	"AA" - "ZZ"
6-7	2	Record type	"H1"
8-32	25	Lab name	Character
33-43	11	Contract	Character
44-49	6	Lab code	Character
50-54	5	Case no.	Character
55-62	8	Batch no.	Character
63-64	2	Sequence no.	Character
65-70	6	SAS no.	Character
71-80	10	Instrument ID	Character
81-92	12	EPA sample no.	Character
93-104	12	Lab sample ID	Character
105-113	9	Standard concentration	Numeric 9.0
114-119	6	Date analyzed	YYMMDD
120-123	4	Time analyzed	HHMM
124-133	10	SMC CAS no.	Character
134-142	9	SMC area	Numeric 9.0
143-148	6	SMC RT	Numeric 6.3 (minutes)
149-154	6	SMC IC $\overline{RT}$	Numeric 6.3 (minutes)
155-159	5	RT %D	Numeric 5.1
160	1	SMC RT %D out flag	"*" or blank

DETAIL RECORD

COLUMN	LENGTH	CONTENTS	FORMAT/CONTENTS
1-3	3	Form number	"Q5A"
4-5	2	Form suffix	"AA" - "ZZ"
6-7	2	Record type	"D1"
8-17	10	CAS no.	Character
18-25	8	Initial $\overline{CF}$	Numeric 8.0
26-33	8	Mid	Numeric 8.0
34-38	5	% D	Numeric 5.1
39	1	% D out flag	"*" or blank
40-45	6	Resol. % valley	Numeric 6.2
46	1	Resol. % valley out flag	"*" or blank

FORM QV - PAH
POLYNUCLEAR AROMATIC HYDROCARBONS CALIBRATION CHECK SHEET

HEADER RECORD

COLUMN	LENGTH	CONTENTS	FORMAT/CONTENTS
1-3	3	Form number	"Q5B"
4-5	2	Form suffix	"AA" - "ZZ"
6-7	2	Record type	"H1"
8-32	25	Lab name	Character
33-43	11	Contract	Character
44-49	6	Lab code	Character
50-54	5	Case no.	Character
55-62	8	Batch no.	Character
63-64	2	Sequence no.	Character
65-70	6	SAS no.	Character
71-80	10	Instrument ID	Character
81-92	12	EPA sample no.	Character
93-104	12	Lab sample ID	Character
105-113	9	Standard concentration	Numeric 9.0
114-119	6	Date analyzed	YYMMDD
120-123	4	Time analyzed	HHMM
124-133	10	SMC CAS no.	Character
134-142	9	SMC area	Numeric 9.0
143-148	6	SMC RT	Numeric 6.3 (minutes)
149-154	6	SMC IC $\overline{RT}$	Numeric 6.3 (minutes)
155-159	5	RT %D	Numeric 5.1
160	1	SMC RT %D out flag	"*" or blank

DETAIL RECORD

COLUMN	LENGTH	CONTENTS	FORMAT/CONTENTS
1-3	3	Form number	"Q5B"
4-5	2	Form suffix	"AA" - "ZZ"
6-7	2	Record type	"D1"
8-17	10	CAS no.	Character, "COMBINEA" for coeluter
18-25	8	Initial $\overline{CF}$	Numeric 8.0
26-33	8	Mid	Numeric 8.0
34-38	5	% D	Numeric 5.1
39	1	% D out flag	"*" or blank
40-45	6	Resol. % valley	Numeric 6.2
46	1	Resol. % valley out flag	"*" or blank

FORM QV - PHE
PHENOLS CALIBRATION CHECK SHEET

HEADER RECORD

COLUMN	LENGTH	CONTENTS	FORMAT/CONTENTS
1-3	3	Form number	"Q5C"
4-5	2	Form suffix	"AA" - "ZZ"
6-7	2	Record type	"H1"
8-32	25	Lab name	Character
33-43	11	Contract	Character
44-49	6	Lab code	Character
50-54	5	Case no.	Character
55-62	8	Batch no.	Character
63-64	2	Sequence no.	Character
65-70	6	SAS no.	Character
71-80	10	Instrument ID	Character
81-92	12	EPA sample no.	Character
93-104	12	Lab sample ID	Character
105-113	9	Standard concentration	Numeric 9.0
114-119	6	Date analyzed	YYMMDD
120-123	4	Time analyzed	HHMM
124-133	10	SMC CAS no.	Character
134-142	9	SMC area	Numeric 9.0
143-148	6	SMC RT	Numeric 6.3 (minutes)
149-154	6	SMC IC $\overline{RT}$	Numeric 6.3 (minutes)
155-159	5	RT %D	Numeric 5.1
160	1	SMC RT %D out flag	"*" or blank

DETAIL RECORD

COLUMN	LENGTH	CONTENTS	FORMAT/CONTENTS
1-3	3	Form number	"Q5C"
4-5	2	Form suffix	"AA" - "ZZ"
6-7	2	Record type	"D1"
8-17	10	CAS no.	Character, "COMBINED" and "COMBINEE" for coeluters
18-25	8	Initial $\overline{CF}$	Numeric 8.0
26-33	8	Mid	Numeric 8.0
34-38	5	% D	Numeric 5.1
39	1	% D out flag	"*" or blank
40-45	6	Resol. % valley	Numeric 6.2
46	1	Resol. % valley out flag	"*" or blank

FORM QV - PEST
PESTICIDES CALIBRATION CHECK SHEET

HEADER RECORD

COLUMN	LENGTH	CONTENTS	FORMAT/CONTENTS
1-3	3	Form number	"Q5D"
4-5	2	Form suffix	"AA" - "ZZ"
6-7	2	Record type	"H1"
8-32	25	Lab name	Character
33-43	11	Contract	Character
44-49	6	Lab code	Character
50-54	5	Case no.	Character
55-62	8	Batch no.	Character
63-64	2	Sequence no.	Character
65-70	6	SAS no.	Character
71-80	10	Instrument ID	Character
81-92	12	EPA sample no.	Character
93-104	12	Lab sample ID	Character
105-113	9	Standard concentration	Numeric 9.0
114-119	6	Date analyzed	YYMMDD
120-123	4	Time analyzed	HHMM
124-133	10	SMC CAS no.	Character
134-142	9	SMC area	Numeric 9.0
143-148	6	SMC RT	Numeric 6.3 (minutes)
149-154	6	SMC IC $\overline{RT}$	Numeric 6.3 (minutes)
155-159	5	RT %D	Numeric 5.1
160	1	SMC RT %D out flag	"*" or blank

DETAIL RECORD

COLUMN	LENGTH	CONTENTS	FORMAT/CONTENTS
1-3	3	Form number	"Q5D"
4-5	2	Form suffix	"AA" - "ZZ"
6-7	2	Record type	"D1"
8-17	10	CAS no.	Character
18-25	8	Initial $\overline{CF}$	Numeric 8.0
26-33	8	Mid	Numeric 8.0
34-38	5	% D	Numeric 5.1
39	1	% D out flag	"*" or blank
40-45	6	Resol. % valley	Numeric 6.2
46	1	Resol. % valley out flag	"*" or blank

FORM QV - PCB
AROCLORS CALIBRATION CHECK SHEET

HEADER RECORD

COLUMN	LENGTH	CONTENTS	FORMAT/CONTENTS
1-3	3	Form number	"Q5E"
4-5	2	Form suffix	"AA" - "ZZ"
6-7	2	Record type	"H1"
8-32	25	Lab name	Character
33-43	11	Contract	Character
44-49	6	Lab code	Character
50-54	5	Case no.	Character
55-62	8	Batch no.	Character
63-64	2	Sequence no.	Character
65-70	6	SAS no.	Character
71-80	10	Instrument ID	Character
81-92	12	EPA sample no.	Character
93-104	12	Lab sample ID	Character
105-113	9	Standard concentration	Numeric 9.0
114-119	6	Date analyzed	YYMMDD
120-123	4	Time analyzed	HHMM
124-133	10	SMC CAS no.	Character
134-142	9	SMC area	Numeric 9.0
143-148	6	SMC RT	Numeric 6.3 (minutes)
149-154	6	SMC IC $\overline{RT}$	Numeric 6.3 (minutes)
155-159	5	RT %D	Numeric 5.1
160	1	SMC RT %D out flag	"*" or blank

DETAIL RECORD

COLUMN	LENGTH	CONTENTS	FORMAT/CONTENTS
1-3	3	Form number	"Q5E"
4-5	2	Form suffix	"AA" - "ZZ"
6-7	2	Record type	"D1"
8-17	10	CAS no.	Character
18	1	Peak	Numeric 1.0
19-26	8	Initial $\overline{CF}$	Numeric 8.0
27-34	8	Mid	Numeric 8.0
35-39	5	% D	Numeric 5.1
40	1	% D out flag	"*" or blank
41-46	6	Resol. % valley	Numeric 6.2
47	1	Resol. % valley out flag	"*" or blank

FORM QVI - VOA
VOLATILES ANALYTICAL SEQUENCE SUMMARY

HEADER RECORD

COLUMN	LENGTH	CONTENTS	FORMAT/CONTENTS
1-3	3	Form number	"Q6A"
4-5	2	Form suffix	"AA" - "ZZ"
6-7	2	Record type	"H1"
8-32	25	Lab name	Character
33-43	11	Contract	Character
44-49	6	Lab code	Character
50-54	5	Case no.	Character
55-62	8	Batch no.	Character
63-64	2	Sequence no.	Character
65-70	6	SAS no.	Character
71-80	10	Instrument ID	Character
81-86	6	Start date	YYMMDD
87-90	4	Start time	HHMM
91-96	6	Stop date	YYMMDD
97-100	4	Stop time	HHMM
101-106	6	Initial calibration date	YYMMDD

DETAIL RECORD

COLUMN	LENGTH	CONTENTS	FORMAT/CONTENTS
1-3	3	Form number	"Q6A
4-5	2	Form suffix	"AA" - "ZZ"
6-7	2	Record type	"D1"
8-19	12	EPA sample no.	Character
20-31	12	Lab sample ID	Character
32-37	6	Date analyzed	YYMMDD
38-41	4	Time analyzed	HHMM

FORM QVI - PAH
POLYNUCLEAR AROMATIC HYDROCARBONS ANALYTICAL SEQUENCE SUMMARY

HEADER RECORD

COLUMN	LENGTH	CONTENTS	FORMAT/CONTENTS
1-3	3	Form number	"Q6B"
4-5	2	Form suffix	"AA" - "ZZ"
6-7	2	Record type	"H1"
8-32	25	Lab name	Character
33-43	11	Contract	Character
44-49	6	Lab code	Character
50-54	5	Case no.	Character
55-62	8	Batch no.	Character
63-64	2	Sequence no.	Character
65-70	6	SAS no.	Character
71-80	10	Instrument ID	Character
81-86	6	Start date	YYMMDD
87-90	4	Start time	HHMM
91-96	6	Stop date	YYMMDD
97-100	4	Stop time	HHMM
101-106	6	Initial calibration date	YYMMDD

DETAIL RECORD

COLUMN	LENGTH	CONTENTS	FORMAT/CONTENTS
1-3	3	Form number	"Q6B
4-5	2	Form suffix	"AA" - "ZZ"
6-7	2	Record type	"D1"
8-19	12	EPA sample no.	Character
20-31	12	Lab sample ID	Character
32-37	6	Date analyzed	YYMMDD
38-41	4	Time analyzed	HHMM

FORM QVI - PHE
PHENOLS ANALYTICAL SEQUENCE SUMMARY

HEADER RECORD

COLUMN	LENGTH	CONTENTS	FORMAT/CONTENTS
1-3	3	Form number	"Q6C"
4-5	2	Form suffix	"AA" - "ZZ"
6-7	2	Record type	"H1"
8-32	25	Lab name	Character
33-43	11	Contract	Character
44-49	6	Lab code	Character
50-54	5	Case no.	Character
55-62	8	Batch no.	Character
63-64	2	Sequence no.	Character
65-70	6	SAS no.	Character
71-80	10	Instrument ID	Character
81-86	6	Start date	YYMMDD
87-90	4	Start time	HHMM
91-96	6	Stop date	YYMMDD
97-100	4	Stop time	HHMM
101-106	6	Initial calibration date	YYMMDD

DETAIL RECORD

COLUMN	LENGTH	CONTENTS	FORMAT/CONTENTS
1-3	3	Form number	"Q6C
4-5	2	Form suffix	"AA" - "ZZ"
6-7	2	Record type	"D1"
8-19	12	EPA sample no.	Character
20-31	12	Lab sample ID	Character
32-37	6	Date analyzed	YYMMDD
38-41	4	Time analyzed	HHMM

FORM QVI - PEST
PESTICIDES ANALYTICAL SEQUENCE SUMMARY

HEADER RECORD

COLUMN	LENGTH	CONTENTS	FORMAT/CONTENTS
1-3	3	Form number	"Q6D"
4-5	2	Form suffix	"AA" - "ZZ"
6-7	2	Record type	"H1"
8-32	25	Lab name	Character
33-43	11	Contract	Character
44-49	6	Lab code	Character
50-54	5	Case no.	Character
55-62	8	Batch no.	Character
63-64	2	Sequence no.	Character
65-70	6	SAS no.	Character
71-80	10	Instrument ID	Character
81-86	6	Start date	YYMMDD
87-90	4	Start time	HHMM
91-96	6	Stop date	YYMMDD
97-100	4	Stop time	HHMM
101-106	6	Initial calibration date	YYMMDD

DETAIL RECORD

COLUMN	LENGTH	CONTENTS	FORMAT/CONTENTS
1-3	3	Form number	"Q6D
4-5	2	Form suffix	"AA" - "ZZ"
6-7	2	Record type	"D1"
8-19	12	EPA sample no.	Character
20-31	12	Lab sample ID	Character
32-37	6	Date analyzed	YYMMDD
38-41	4	Time analyzed	HHMM

FORM QVI - PCB
AROCLORS ANALYTICAL SEQUENCE SUMMARY

HEADER RECORD

COLUMN	LENGTH	CONTENTS	FORMAT/CONTENTS
1-3	3	Form number	"Q6E"
4-5	2	Form suffix	"AA" - "ZZ"
6-7	2	Record type	"H1"
8-32	25	Lab name	Character
33-43	11	Contract	Character
44-49	6	Lab code	Character
50-54	5	Case no.	Character
55-62	8	Batch no.	Character
63-64	2	Sequence no.	Character
65-70	6	SAS no.	Character
71-80	10	Instrument ID	Character
81-86	6	Start date	YYMMDD
87-90	4	Start time	HHMM
91-96	6	Stop date	YYMMDD
97-100	4	Stop time	HHMM
101-106	6	Initial calibration date	YYMMDD

DETAIL RECORD

COLUMN	LENGTH	CONTENTS	FORMAT/CONTENTS
1-3	3	Form number	"Q6E
4-5	2	Form suffix	"AA" - "ZZ"
6-7	2	Record type	"D1"
8-19	12	EPA sample no.	Character
20-31	12	Lab sample ID	Character
32-37	6	Date analyzed	YYMMDD
38-41	4	Time analyzed	HHMM

FORM QVII - VOA
VOLATILES NARRATIVE

HEADER RECORD

COLUMN	LENGTH	CONTENTS	FORMAT/CONTENTS
1-3	3	Form number	"Q7A"
4-5	2	Form suffix	"AA"
6-7	2	Record type	"H1"
8-32	25	Lab name	Character
33-43	11	Contract	Character
44-49	6	Lab code	Character
50-54	5	Case no.	Character
55-62	8	Batch no.	Character
63-68	6	SAS no.	Character

DETAIL RECORD

COLUMN	LENGTH	CONTENTS	FORMAT/CONTENTS
1-3	3	Form number	"Q7A"
4-5	2	Form suffix	"AA" - "ZZ"
6-7	2	Record type	"D1"
8-10	3	Comment line #	Numeric 3.0
11-75	65	Comment	Character

FORM QVII - PAH
POLYNUCLEAR AROMATIC HYDROCARBONS NARRATIVE

HEADER RECORD

COLUMN	LENGTH	CONTENTS	FORMAT/CONTENTS
1-3	3	Form number	"Q7B"
4-5	2	Form suffix	"AA"
6-7	2	Record type	"H1"
8-32	25	Lab name	Character
33-43	11	Contract	Character
44-49	6	Lab code	Character
50-54	5	Case no.	Character
55-62	8	Batch no.	Character
63-68	6	SAS no.	Character

DETAIL RECORD

COLUMN	LENGTH	CONTENTS	FORMAT/CONTENTS
1-3	3	Form number	"Q7B"
4-5	2	Form suffix	"AA" - "ZZ"
6-7	2	Record type	"D1"
8-10	3	Comment line #	Numeric 3.0
11-75	65	Comment	Character

FORM QVII - PHE
PHENOLS NARRATIVE

HEADER RECORD

COLUMN	LENGTH	CONTENTS	FORMAT/CONTENTS
1-3	3	Form number	"Q7C"
4-5	2	Form suffix	"AA"
6-7	2	Record type	"H1"
8-32	25	Lab name	Character
33-43	11	Contract	Character
44-49	6	Lab code	Character
50-54	5	Case no.	Character
55-62	8	Batch no.	Character
63-68	6	SAS no.	Character

DETAIL RECORD

COLUMN	LENGTH	CONTENTS	FORMAT/CONTENTS
1-3	3	Form number	"Q7C"
4-5	2	Form suffix	"AA" - "ZZ"
6-7	2	Record type	"D1"
8-10	3	Comment line #	Numeric 3.0
11-75	65	Comment	Character

FORM QVII - PEST
PESTICIDES NARRATIVE

HEADER RECORD

COLUMN	LENGTH	CONTENTS	FORMAT/CONTENTS
1-3	3	Form number	"Q7D"
4-5	2	Form suffix	"AA"
6-7	2	Record type	"H1"
8-32	25	Lab name	Character
33-43	11	Contract	Character
44-49	6	Lab code	Character
50-54	5	Case no.	Character
55-62	8	Batch no.	Character
63-68	6	SAS no.	Character

DETAIL RECORD

COLUMN	LENGTH	CONTENTS	FORMAT/CONTENTS
1-3	3	Form number	"Q7D"
4-5	2	Form suffix	"AA" - "ZZ"
6-7	2	Record type	"D1"
8-10	3	Comment line #	Numeric 3.0
11-75	65	Comment	Character

FORM QVII - PCB
AROCLORS NARRATIVE

HEADER RECORD

COLUMN	LENGTH	CONTENTS	FORMAT/CONTENTS
1-3	3	Form number	"Q7E"
4-5	2	Form suffix	"AA"
6-7	2	Record type	"H1"
8-32	25	Lab name	Character
33-43	11	Contract	Character
44-49	6	Lab code	Character
50-54	5	Case no.	Character
55-62	8	Batch no.	Character
63-68	6	SAS no.	Character

DETAIL RECORD

COLUMN	LENGTH	CONTENTS	FORMAT/CONTENTS
1-3	3	Form number	"Q7E"
4-5	2	Form suffix	"AA" - "ZZ"
6-7	2	Record type	"D1"
8-10	3	Comment line #	Numeric 3.0
11-75	65	Comment	Character

U.S. Environmental Protection Agency
Region 5, Library (PL-12J)
77 West Jackson Boulevard, 12th Floor
Chicago, IL 60604-3590