United States
Environmental Protection
Agency

EPA/540/S5-88/002
January 1989

EPA

SITE
SUPERFUND INNOVATIVE
TECHNOLOGY EVALUATION

Technology Demonstration Summary

Shirco Electric Infrared Incineration System at the Peak Oil Superfund Site

Under the auspices of the Superfund Innovative Technology Evaluation or SITE Program, a critical assessment is made of the performance of the transportable Shirco Infrared Thermal Destruction System* during three separate test runs at an operating feedrate of 100 tons per day. The unit was operated as part of an emergency cleanup action at the Peak Oil Superfund site in Brandon, Florida. The report includes a process description of the unit, unit operations data and a discussion of unit operations problems, sampling and analytical procedures and data, and an overall performance and cost evaluation of the system.

The results show that the unit achieved destruction and removal efficiencies (DREs) of polychlorinated biphenyls (PCBs) exceeding 99.99% and destruction efficiencies (DEs) of PCBs ranging from 83.15% to 99.88%. Acid gas removal efficiencies were consistently greater than 99%. Particulate emissions ranged from 171 to 358 mg/dscm, exceeding 180 mg/dscm during two of the four tests. The Extraction Procedure (EP) Toxicity Test on the furnace ash exceeded the RCRA EP Toxicity Characteristic standard for lead. Small quantities of tetrachlorodibenzofuran (TCDF) were detected in one of the four stack gas samples. Also detected were low levels of some semivolatile organics and a broader range of volatile organics, which can be considered products of incomplete combustion (PICs). Ambient air monitoring stations detected quantities of PCBs, which appear to be caused by the transport of ash from the ash pad to the ash storage area. Waste feed and ash samples were not mutagenic according to the standard Ames Salmonella mutagenicity assay. Unit costs are estimated to range from $196 to $795 per ton with a normalized cost per ton of $425 for the Peak Oil cleanup.

This Summary was developed by EPA's Risk Reduction Engineering Laboratory, Cincinnati, OH, to announce key findings of the SITE Program demonstration that is fully documented in three separate reports (see ordering information at back).

Introduction

The SITE Program demonstration test of the Shirco infrared incineration system was conducted from July 1, 1987 to August 4, 1987 at the Peak Oil Superfund site in Brandon, Florida during a removal action by EPA Region IV The Region had contracted with Haztech, Inc , an emergency removal cleanup contractor, to incinerate approximately 7,000 tons of waste oil sludge contaminated with PCBs and lead after determining that high temperature thermal destruction of the nonrecyclable sludge was capable of destroying the PCBs in a cost-effective and environmentally sound manner. Metals that concentrated in the ash residue would be dealt with after the thermal destruction of the sludge. The removal action offered an ideal opportunity for the SITE program to obtain specific operating, design, analytical, and cost information to evaluate the performance of the unit under actual operating conditions. Also, the SITE program studied the feasibility of utilizing the Shirco transportable infrared incinerator as a viable hazardous waste treatment system at other sites throughout the country. To this end, specific test objectives of the Shirco system were:

- To determine the system's destruction and removal efficiency (DRE) for PCBs.
- To report the unit's ability to decontaminate the solid material being processed and to determine the destruction efficiency (DE) for PCBs based on the PCB content of the furnace ash
- To evaluate the ability of the unit and its associated air pollution control/scrubber system to limit hydrochloric acid and particulate emissions
- To determine whether heavy metals contaminants in the waste feed are chemically bonded or fixated to the ash residue by the process.
- To determine the effect of the thermal destruction process in producing combustion byproducts or products of incomplete combustion (PICs).
- To determine the impact of the unit operation on ambient air quality and potential mutagenic exposure.
- To provide unit cost data for effective development of a cost/economic analysis for the unit
- To document the mechanical operations history of the unit and analyze and provide potential solutions to chronic mechanical problems

Facility and Process Description

Solid waste processed at the Peak Oil site was incinerated in a transportable infrared incinerator, designed and manufactured by Shirco Infrared Systems, Inc. of Dallas, Texas and operated by Haztech, Inc. of Decatur, Georgia. The overall incineration unit consists of a waste preparation system and weigh hopper, infrared primary combustion chamber, supplemental propane-fired secondary combustion chamber (afterburner), emergency bypass stack, venturi/scrubber system, exhaust system, and data collection and control systems, all mounted on transportable trailers. The system process flow and the overall test site layout are presented schematically in Figure 1.

Solid waste feed material is processed by waste preparation equipment designed to reduce the waste to the consistency and particle sizes suitable for processing by the incinerator After transfer from the waste preparation equipment, the solid waste feed is weighed and conveyed to a hopper mounted over the furnace conveyor belt. A feed chute on the hopper distributes the material across the width of the conveyor belt. The feed hopper screw rate and the conveyor belt speed rate are used to control the feedrate and bed depth.

The incinerator conveyor, a tightly woven wire belt, moves the solid waste feed material through the primary combustion chamber where it is brought to combustion temperatures by infrared heating elements. Rotary rakes or cakebreakers gently stir the material to ensure adequate mixing, exposure to the chamber environment, and complete combustion. When the combusted feed or ash reaches the discharge end of the incinerator, it is cooled with a water spray and then is discharged by a screw auger/conveyor to an ash hopper.

The combustion air to the incinerator is supplied through a series of overfire air ports located at various locations along the incinerator chamber; combustion air flows countercurrent to the conveyed waste feed material

Exhaust gas exits the primary combustion chamber and flows into the secondary combustion chamber where propane-fired burners combust ar residual organics present in the exhau gas. The secondary combustion chamb burners are set to burn at a prede termined temperature. Secondary air supplied to ensure adequate exces oxygen levels for complete combustio Exhaust gas from the secondar combustion chamber is quenched by water-fed venturi/scrubber to remov particulate matter and acid gases; th exhaust gas is then transferred to th exhaust stack by an induced draft fa and finally discharged to the atmosphere

The main unit controls and dat collection indicators comprising the dat collection and control system are house in a specially designed van

An emergency bypass stack i mounted in the system directly upstrea of the venturi/scrubber for the diversio of hot process gases under emergenc shutdown conditions

Results and Discussion

A detailed summary of the SIT demonstration test results is presented i Table 1. Based on the test objective outlined in the Introduction, the followin results and conclusions were obtained.

PCB Destruction and Removal Efficiency

PCBs were analyzed in the solid wast feed, furnace ash, scrubber effluer solids, stack gas, scrubber liquid effluen and scrubber water inlet. The DR calculation for PCBs is based on th following:

$$DRE = \frac{W_{in} - W_{out}}{W_{in}} \times 100$$

where: W_{in} = mass rate of PCBs fed t incinerator

W_{out} = mass emission rate c PCBs in stack gas

The unit achieved a DRE for PCBs c 99.99%.

It should be noted that the unit wa operated to produce an ash tha contained 1 ppm or less of PCB. Th PCB concentration in the waste feed t the unit varied from 5.85 to 3.48 ppr during the tests These low PCI concentrations in the waste feed were th result of mixing the original oily wast having up to 100 ppm of PCBs with th PCB-free surrounding soil, lime, an sand so that the resulting material coul

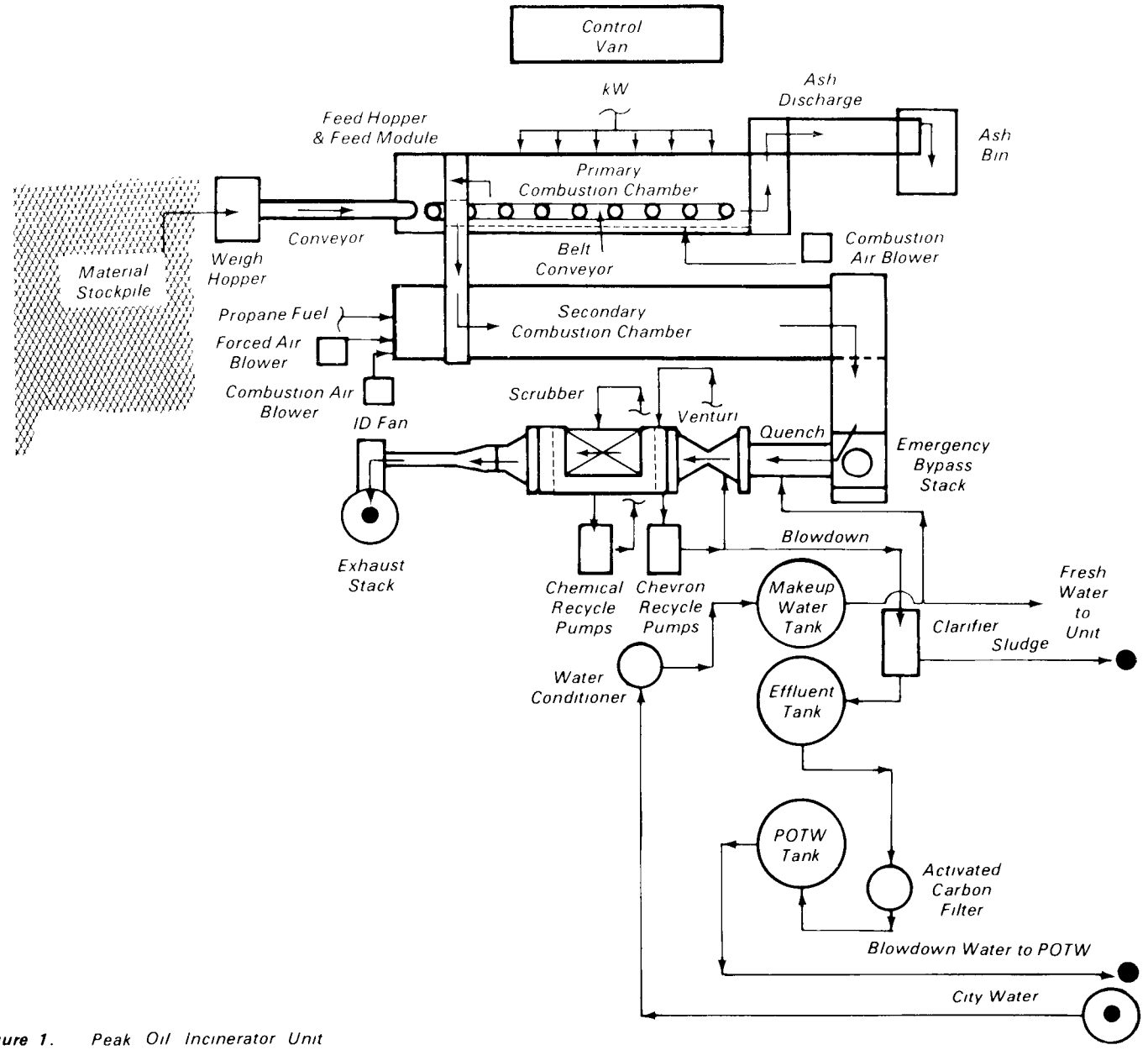

Figure 1. Peak Oil Incinerator Unit

be handled and processed as a solid waste It was not possible to calculate the DRE beyond two decimal places because of the detection limits associated with the analytical procedures employed

Decontamination of Solid Waste and Destruction Efficiency

Residual PCBs in the furnace ash were below the 1 ppm operating standard, ranging from 0 007 ppm on August 1 to 0 900 ppm on August 3. DE was determined by the formula

$$DE = \frac{W_{in} - W_{out}}{W_{in}} \times 100$$

where W_{in} = mass rate of PCBs fed to incinerator

W_{out} = mass rate of PCBs in stack gas, furnace ash, and scrubber effluent

A basis for calculating DE was based on the PCB concentrations in the waste feed and the furnace ash The DE or removal of the PCBs from the waste feed ranged from 99 88 wt% (August 1) to 83.15 wt% (August 3)

Acid Gas Removal

Measured HCl emission rates ranged from less than 0.8 to 8.6 g/hr. Since the chlorine concentration in the solid waste feed was below the 0.1% detection limit, it was impossible to determine actual HCl removal efficiency However, SO_2

Table 1. *Site Demonstration Test Results Summary*

	8/1/87	8/2/87	8/3/87	8/4/87
Waste Feed Characteristics				
Moisture, wt %	16.63	16 06	14 24	14 37
Ash, wt %	69 77	69 80	72.40	75 21
HHV, Btu/lb	2064	1639	1728	2018
PCB, ppm	5 850	3.850	5.340	3 480
Pb, ppm	5900	4900	5000	4400
Chlorine, ppm	< 1000	< 1000	< 1000	< 1000
Sulfur, ppm	25300	17800	18900	16700
Chlorine (as HCl), kg/hr	< 5	< 5	< 5	< 5
Sulfur (as SO_2), kg/hr	200	132	138	125
EP Tox (Pb), mg/L, ppm	27.00	29 00	- -	24 00
TCLP (Pb), mg/L, ppm	8 60	2 50	3 00	3.50
Stack Gas				
HCl, ppmv	< 0 051	0 60	0.22	0 20
SO_2, ppmv	0 99	41 80	0.96	0 91
HCl, g/hr	< 0 8	8 60	2 90	2 70
SO_2, g/hr	27.40	1070.0	22.0	20.6
Particulates (@ 7% O_2), mg/dscm	358	211	173	171
PCB, µg/hr	57 70	174 50	58 10	126 20
Ash				
PCB, ppm	0.01	0.240	0.900	0 540
Pb, ppm	7100	6000	6400	6200
EP Tox (Pb), mg/L, ppm	25 0	28.0	36.0	36.0
TCLP (Pb), mg/L, ppm	0.01	0.01	0 02	0 01
Operating Conditions				
Waste Feedrate (avg. daily), kg/hr	3328	3287	3626	3600
DRE (PCB), wt %	99 99	99.99	99.99	99.99
DE (PCB), wt %	99 88	93 77	83.15	84.48
Primary Combustion Chamber				
Exhaust Temperature (avg), F	1797	1836	1922	1885
Residence Time, min	19	19	18	19
Secondary Combustion Chamber				
Chamber Temperature (avg), F	1886	1887	1889	1907
Residence Time, sec	> 3	> 3	> 3	> 3
Acid Gas Removal Efficiency, wt % SO_2	> 99 9	> 99 1	> 99 9	> 99 9

emissions were less than 1100 g/hr, with an average 149 kg/hr SO_2 feedrate giving an average removal of SO_2 in excess of 99% SO_2 is more difficult to remove than HCl in a caustic scrubber, and the tests show that HCl removal should be in excess of the 99% determined for SO_2 removal.

Particulate Emissions

The particulate emissions during the first day were 358 mg/dscm The unit was cleaned and mechanical adjustments were made resulting in an emission rate of 211 mg/dscm during the second day The emissions during the third day were 172 mg/dscm (average of duplicate measurements) These values exceeded the RCRA standards during two of the four sampling periods. Particulate emissions were about 60% lead, when analyses of all samples were averaged

Leaching Characteristics

The solid waste feed, furnace ash, and scrubber effluent solids were subjected to the EP Toxicity and proposed TCLP tests to evaluate the toxicity characteristics of these materials

The EP Toxicity and the TCLP data present a contradictory picture regarding leaching of metals The EP Toxicity data did not indicate that the process "encapsulates" or ties up heavy metals (lead) in the ash to prevent leaching. The EP Toxicity data show that lead content in the ash was 30 ppm and exceeded the 5 ppm toxicity characteristic standard. The measured lead content of leachates for feed material and ash are almost equal, indicating that the process appears not to affect leaching characteristics for lead

In contrast to the EP Toxicity data, the TCLP data show that the lead content for both the feed and ash were less than the proposed toxicity characteristic standard of 5 ppm Measured lead concentrations were an order of magnitude lower in the TCLP leachate (about 2 ppm compared to about 30 ppm for EP Toxicity)

The significant differences in results from these two analytical techniques have been documented in a recent Oak Ridge National Laboratory report (ORNL "Leaching of Metals from Alkaline Wastes by Municipal Waste Leachate," ORNL/TM-11050, March, 1987) It appears that the differences in the test procedures and alkalinity of the matrix provide a difference in the pH environment that is sufficient to affect the solubility and leachability of heavy metals, particularly lead

Products of Incomplete Combustion

Small quantities of products of incomplete combustion (PICs) were identified in the sampled streams from

the unit. No polychlorinated dibenzodioxins (PCDDs) or polychlorinated dibenzofurans (PCDFs) were identified in any of the sampled streams above detection limits with the exception of trace quantities (2 1 ng) of tetrachlorodibenzofuran (TCDF) found in the stack gas sampled on August 2.

Low levels of some semivolatile organic compounds were identified in all streams. These compounds were primarily phthalates, which may be the result of contamination from plastic components in the process, sampling equipment, or laboratory apparatus Other semivolatile compounds included aromatic, polyaromatic, and chlorinated aromatic hydrocarbons. Low levels of pyrene, chrysene, anthenes, naphthalenes, and chlorinated benzene were identified in the waste feed stream; although possible PICs, their presence must be discounted to some extent, because they were originally introduced into the unit with the waste feed

Low concentrations of volatile organics were measured in the stack gas and included halogenated methanes, chlorinated organics, and aromatic hydrocarbons including BTX compounds No volatile organics were identified in the water streams. Low levels (ppb) of chlorinated hydrocarbons and BTX compounds were measured in all solid streams. Low levels of BTX compounds, carbon disulfide, chloroform, ditrichlorofluoromethane, and trichlorofluoromethane, dichloroethane, and trichloroethane, and methylene chloride were identified in the waste feed Methylene chloride, a solvent used during testing, was also detected in laboratory and field blanks These compounds, although possible PICs, must also be discounted to some extent based on their introduction to the unit from an external source and because of possible contamination

Ambient Air Sampling and Mutagenic Testing

Ambient air monitoring stations placed upwind and downwind of the Shirco unit were designed to collect airborne PCB contaminants Based on the downwind sampler data, it appears that the Peak Oil site boundaries limited the location of the downwind sampler to an area that was significantly exposed to fugitive emissions during the transport of ash from the ash pad to the ash storage area

Samples of the waste feed and ash were collected on August 2 and forwarded to the EPA Health Effects Laboratory, Research Triangle Park, North Carolina for mutagenic testing. The results of these tests indicate that although the samples contain hazardous contaminants, they are not mutagenic based on the standard Ames Salmonella mutagenicity assay.

Cost/Economic Analysis

Several cost scenarios examined were based on a model for a Shirco unit operation equivalent in processing capacity to the unit that operated at Peak Oil, and on cost data available from Shirco and other sources. The economic analysis concludes that in using currently available Shirco transportable infrared incineration systems, commercial incineration costs will range from an estimated $196 per ton for a Shirco unit operation at an 80% on-stream capacity factor to an estimated $795 per ton for the operation at the Peak Oil site at a 19% on-stream capacity factor. A normalized total cost per ton of $425 represents a more realistic interpretation of the costs accrued to the Peak Oil cleanup action based on a 37% on-stream capacity factor

Unit Problems

A review of the Haztech, EPA Technical Assistance Team (TAT), and EPA logbooks and progress reports, plus discussions with unit and project personnel, provided a summary of mechanical and operating problems encountered in this first application of a full-scale commercial Shirco incineration system at a Superfund site These problems were categorized by unit operating sections, and a profile of the major problem areas within the unit were defined and analyzed to ascertain the reasons for and possible solutions to these specific operational difficulties The review revealed that materials handling and emissions control were the most significant problem areas affecting operation of the unit Prior to the operation of such a unit, extensive pretest analysis should be conducted on the waste feed matrix The characteristics of the feed, including the nature of contaminants plus the feed's effect on incineration system chemistry, must be defined to allow appropriate assembly of the unit The unit must be equipped with the proper feed preparation system and materials handling capabilities and adequate emissions control capacity and effectiveness. At the Peak Oil site, the solidified sludge feed continually agglomerated, clogged, bridged, and jammed feed preparation and handling equipment. The high levels of lead contaminant and the excessive carryover of calcium and magnesium salts were a continuous source of problems for the emissions control system, which had difficulty in meeting stack emissions criteria.

Conclusions and Recommendations

Based on the above data and discussions, the following conclusions and recommendations can be made concerning the operation and performance of the transportable Shirco infrared thermal destruction system.

1 The unit achieved DREs of PCBs greater than 99.99%. Detection limits were used for this calculation so actual DREs were greater.

2. The unit achieved DEs of PCBs ranging from 83.15 to 99 88%. The unit was operated to produce an ash that contained 1 ppm or less of PCB.

3. Acid gas removal efficiencies were consistently greater than 99%. Particulate emissions during two days of testing were 358 mg/dscm and 211 mg/dscm, which contained 60% lead The unit's emissions control system experienced particulate removal problems due to a combination of excessive fines carryover from the waste feed matrix and scrubber-washer and an overall emissions control system design that was not able to operate efficiently at abnormally high particulate loadings As a result, two of the four samples taken exceeded the 180 mg/dscm RCRA standard

   Pretest analysis of the waste feed and its combustion and emissions control chemistry and mechanisms must be performed to identify potential emissions control problems A more flexible and adaptable emissions control system should be developed that can respond to and control a wider range of particulate and stack gas flows

4. The furnace ash failed to meet the toxicity characteristic standard for lead for the EP Toxicity Test Procedure. Although the ash passed the similar standard for the proposed TCLP, its failure under EP Tox indicates that the unit did not immobilize lead in the ash product.

5 Small quantities of PICs were identified in the sampled streams from the unit In addition to trace quantities of TCDF on one sample, low levels of semivolatile compounds, including aromatic, polyaromatic, and chlorinated aromatic hydrocarbons were identified Low concentrations of a broader range of volatiles including halogenated methane, chlorinated organics, and BTX compounds were also identified

6 Ambient air monitoring stations detected quantities of PCBs, which appear to be caused by the wind transport of ash resulting from the nearby roadway Waste feed and ash samples were not mutagenic based on the standard Ames Salmonella mutagenicity assay

7 Overall costs ranged from $196 per ton with the unit operating at an 80% on-stream capacity (292 days per year) to $795 per ton with the unit operating at a 19% on-stream capacity (70 days per year) A normalized cost per ton for the Peak Oil cleanup was estimated at $425

8 In addition to the particulate emissions control system problems, waste feed handling and materials handling problems consistently affected the unit's ability to treat the waste feed at design capacity Pretest analysis of the waste feed and its handling characteristics must be performed to identify and design for any potential materials handling or feeding problems that the waste matrix may present at a specific site

The EPA Project Manager, ***Howard Wall****, is with the Risk Reduction Engineering Laboratory, Cincinnati, OH 45268 (see below).*

The complete report consists of two volumes, entitled "Technology Evaluation Report, SITE Program Demonstration Test, Shirco Infrared Incineration System, Peak Oil, Brandon, Florida:"

"Volume I" (Order No. PB 89-125 991/AS; Cost: $21.95, subject to change) discusses the results of the SITE demonstration

"Volume II" (Order No. PB 89-116 024/AS; Cost: $42.95, subject to change) contains the technical operating data logs, the sampling and analytical report, and the quality assurance project plan/test plan

These two reports will be available only from:

National Technical Information Service
5285 Port Royal Road
Springfield, VA 22161
Telephone: 703-487-4650

A related report, entitled "Applications Analysis Report: Shirco Infrared Thermal Destruction System," which discusses application and costs, is under development.

The EPA Project Manager can be contacted at:

Risk Reduction Engineering Laboratory
U.S. Environmental Protection Agency
Cincinnati, OH 45268

United States
Environmental Protection
Agency

Center for Environmental Research
Information
Cincinnati OH 45268

BULK RATE
POSTAGE & FEES PAID
EPA
PERMIT No. G-35

Library, Librarian
EPA Region 5 Library
77 South Wabash St
Chicago, IL 60604

PL