United States
Environmental Protection
Agency

EPA/540/S5-89/011
December 1990

EPA

SITE
SUPERFUND INNOVATIVE
TECHNOLOGY EVALUATION

Technology Demonstration Summary

Chemfix Solidification/ Stabilization Process, Clackamas, Oregon

Chemfix's* patented stabilization/solidification technology was demonstrated at the Portable Equipment Salvage Company (PESC) site in Clackamas, Oregon, as part of the Superfund Innovative Technology Evaluation (SITE) program. The Chemfix process is designed to solidify and stabilize hazardous wastes in liquids, sludges, soils, and ashes using proprietary additives.

The PESC site operated as a transformer and metal salvage facility from the 1960s until 1985. Operations at the site involved scrapping and recycling power transformers containing polychlorinated biphenyls (PCBs) in oils. Salvageable metals from internal wiring and transformer carcasses were processed and recycled. The activities left the soils at the site heavily contaminated with lead, copper, and PCBs as well as other metals and oil.

Based on performance claims and previous treatment data submitted by Chemfix, the objective of the demonstration was to determine the ability of the process to effectively limit the mobility of the metal contaminants, as measured by the toxicity characteristic leaching procedure (TCLP), and to create an environmentally durable product, as indicated by the physical properties of the treated waste.

At least 65% of the treated waste samples from the Chemfix solidification/stabilization process met the land ban standard and soil standard established for the demonstration. Reductions of leachable lead, as measured by the TCLP, ranged from 94% to 99%.

The Chemfix process generally produced treated material with acceptable physical properties. The treated material had properties that indicated long-term durability in exposed environments. Volume increase in the excavated material after treatment ranged between 20% and 50%.

This Summary was developed by EPA's Risk Reduction Engineering Laboratory, Cincinnati, OH, to announce key findings of the SITE Program demonstration that is fully documented in two separate reports (see ordering information at back).

Introduction

In response to the Superfund Amendments and Reauthorization Act of 1986 (SARA), the U.S. Environmental Protection

* Mention of trade names or commercial products does not constitute endorsement or recommendation for use.

Printed on Recycled Paper

Agency's (EPA's) Offices of Research and Development (ORD) and Solid Waste and Emergency Response (OSWER) have established a formal program to accelerate the development, demonstration, and use of new or innovative technologies as alternatives to current containment systems for hazardous wastes. This program is called the Superfund Innovative Technology Evaluation program or SITE.

The SITE demonstration of the Chemfix stabilization/solidification technology began on March 3, 1989, and continued until March 24, 1989. EPA conducted the demonstration at the Portable Equipment Salvage Company (PESC) site in Clackamas, Oregon. During the demonstration, 7 to 8 yd^3 of material were excavated from each of four areas of the site, treated with the Chemfix process, and analyzed for physical and chemical properties.

A data quality objectives (DQO) program was used to define the objectives of the Chemfix process demonstration before site selection. The objectives of the sampling and analysis program were to measure:

- The ability of the Chemfix process to meet or be below land disposal restriction levels for heavy metal wastes (specifically, lead concentrations less than 0.51 mg/L in the TCLP extract) established by EPA. In addition, a demonstration-specific soil standard of 5.0 mg/L in the TCLP extract was used.
- The effectiveness of the Chemfix process to reduce the mobility of heavy metals (specifically lead and copper) and PCBs after treatment using the TCLP test (based upon percent reduction in the concentration).
- The physical properties of waste treated by the Chemfix process. These physical properties are an indication of the product's long-term durability and ability to reduce leaching.
- The ability of the process to dechlorinate PCBs.

Process Description

The Chemfix process is a solidification/stabilization process that can treat solids, liquids, and sludges provided the wastes are between 8% and 75% solids by weight during processing. This technology uses the following materials, measured by weight or volume and added to a continuous process:

- Waste material
- CHEMSET I-20 dry reagent (a cementitious agent)
- CHEMSET C-220 liquid reagent (a patented silicate reagent)
- Water

Figure 1 shows a schematic of the Chemfix equipment used for the PESC site.

The Chemfix treatment system is a mobile, self-contained, continuous processing unit mounted on a flatbed trailer. It solidifies and stabilizes wastes based on chemical reactions of complex silicates. It is intended to treat heavy metals and organic compounds with high molecular weights. The innovative features of the system include the proprietary reagents, the pug mill designed by Chemfix, and the continuous nature of the process. Because it is a continuous process, waste material can be

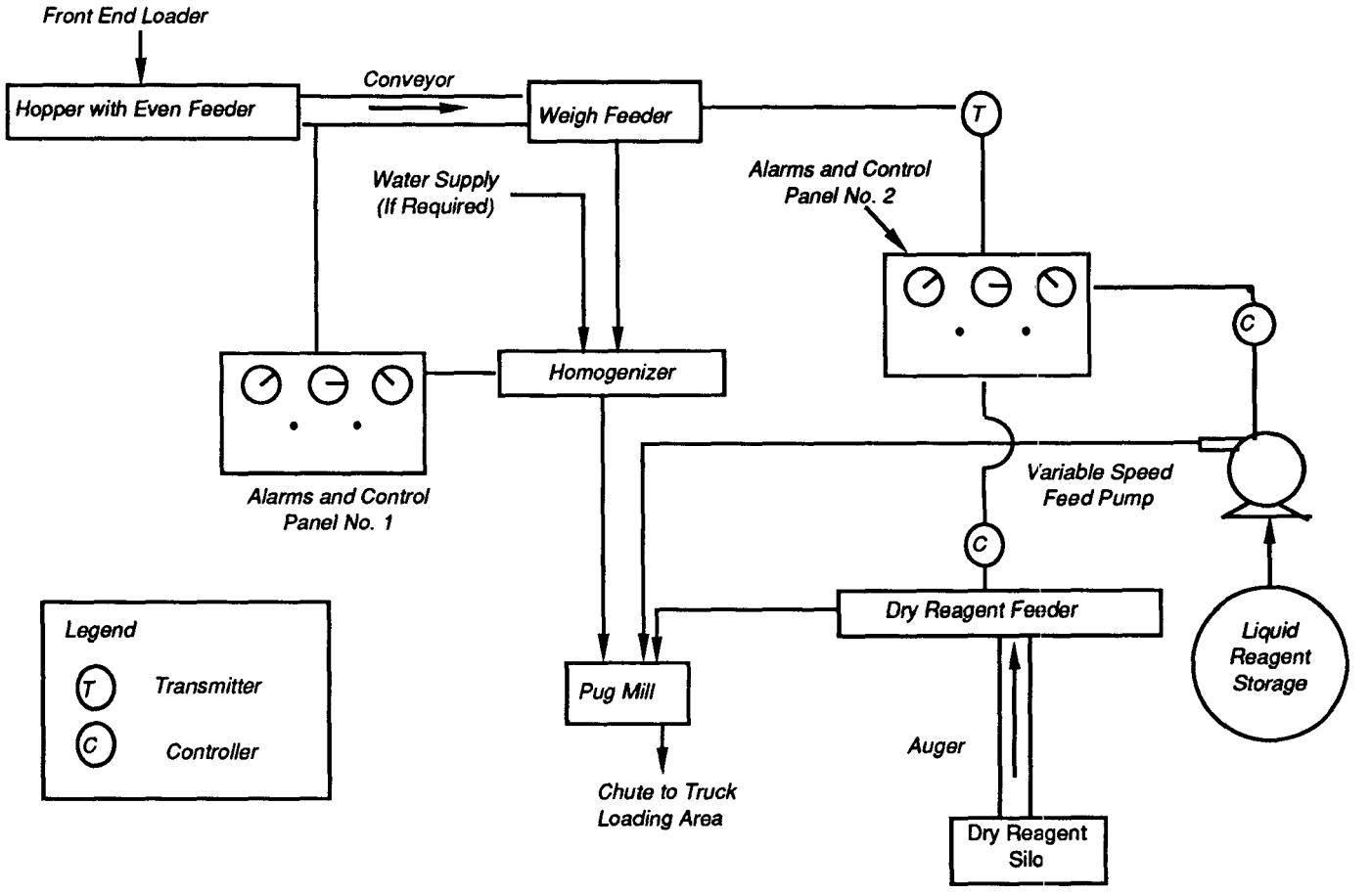

Figure 1. Flow diagram of Chemfix Technologies, Inc., high solids handling system.

treated more quickly, thus lowering the cost per ton of material treated. The process creates either a friable, soil-like product or a monolithic solid.

Chemfix indicates three classes of reactions occur as part of the treatment. First, soluble silicates react with cations in the matrix to form immobile silicates. Second, the siliceous setting agents react with the remaining soluble silicates to produce a gel structure. Finally, hydrolysis, hydration, and neutralization occur to further stabilize the waste.

Site Description

EPA selected the PESC site for the demonstration because the wastes on the site were suitable for evaluating the demonstration objectives described above. The site operated as a transformer and metals salvage facility from the early 1960s to 1985. Operations at the site involved scrapping and recycling power transformers containing PCBs in cooling oils. Salvageable metals from internal wiring and transformer carcasses were processed and recycled. Transformers and other recycled electrical equipment were burned in a furnace to eliminate insulation and other noneconomic elements. Waste transformer oil was used to fire furnaces and metal smelters at the site.

EPA designed the predemonstration sampling activities to isolate waste areas that were sufficiently different in soil type or contaminant concentration so the process would operate over a range of characteristics. This design allowed the limits of the process to be defined. The four selected areas, identified as having different characteristics, are described in Table 1. The data showed ranges of contaminant concentrations and a large percentage of debris, both of which are common on uncontrolled hazardous waste sites. It should be noted that some lead concentrations encountered at the site were very high (up to 139,000 mg/kg).

Demonstration Procedures

Before the demonstration began, the site was prepared for the work. EPA mobilized equipment, provided utilities, and built decontamination facilities and storage areas. Approximately 7 to 8 yd^3 of contaminated soil were excavated from each of the four selected areas. The waste was mixed and loaded on top of a 1-in. screen to separate the large particles (greater than 1 in. in diameter) from the small particles, because the process normally does not, and cannot, treat material greater than 1 in. in diameter. The rejected material was about 30% to 40% of the original quantity of material.

Table 1. *Waste Areas Evaluated During the Chemfix SITE Demonstration (Predemonstration Sampling)*

Area	Description
A Soil -	High lead and copper concentrations (10,000 to 139,000 mg/kg) Medium to high PCB concentrations (100 to 1,940 mg/kg)
C Soil -	High lead and copper concentrations (up to 117,000 mg/kg) High PCB concentrations (up to 1,350 mg/kg)
E Soil -	High lead and copper concentrations (up to 110,000 mg/kg) Low PCB concentrations (<100 mg/kg)
F Ash -	High lead and copper concentrations (40,000 to 136,000 mg/kg) Medium PCB concentrations (200 to 300 mg/kg)

Table 2. *Leaching Tests Used in the Chemfix SITE Demonstration*

Name of Test	Reference	Description
TCLP*	40 CFR Part 268	Ground material subject to 18-hr extraction process with acetic acid leachate to simulate an environment of codisposal with municipal waste
MEP+	EPA Method 1320 (SW-846)	Ground material subject to 24-hr extraction with acetic acid leachate followed by nine sequential extractions with acidic-rain-simulated leachate
ANS 16.1	American Nuclear Society 16.1	Monolithic material placed in distilled water that is replaced over discrete time intervals (diffusion model)

* Toxicity characteristic leaching procedure
\+ Multiple extraction procedure

Table 3. *Physical and Chemical Tests Used in the Chemfix SITE Demonstration*

Name of Test	Reference	Description
Unconfined compressive strength (UCS)	ASTM D 1633	Assesses structural integrity of monolith
Hydraulic conductivity	EPA Draft Protocol	Assesses resistance of material to water flow
Wet/dry resistance	ASTM D 4843	Indicates durability in wet/dry environment
Freeze/thaw resistance	ASTM D 4842	Indicates durability in freeze/thaw environment
Oxidation/reduction	EPA Method 9045 (modified)	Determines oxidation/ reduction state of waste matrix
Electrical conductivity	ASA 10.-3.3	Determines amount of ionic materials present in solution

Chemfix personnel used the Chemfix equipment for five runs: a calibration run with clean sand and one production run for waste from each of the four areas of the site. Each run was relatively short, involving 4 to 6 yd^3 of material. The Chemfix equipment used at the site is designed to treat 75 to 100 yd^3/hr. The very small quantities used for the demonstration may have affected the mixing performance of the process equipment, because of limited calibration time. The quantity of material treated for the demonstration was limited to minimize the quantity of treated material that had to be disposed of after the demonstration.

Sampling and Analysis Procedures

Raw soil samples obtained the day of the demonstration and treated soil samples taken immediately after processing were tested to provide statistical comparisons of the physical and chemical characteristics of the soils. Leaching test samples were formed in plastic or cardboard molding tubes to eliminate destruction of samples or perceived interferences of leaching results from coring operations. Table 2 describes the leaching tests and Table 3 the physical and chemicals tests used in the demonstration.

Demonstration Results

Leaching Tests

Two standards were established for determining the ability of the process to stabilize wastes. The first standard was a concentration of lead less than 0.51 mg/L in the TCLP extract. This standard is based on the Land Disposal Restrictions for electroplating wastes (EPA listed waste F006). The second standard, a concentration of lead less than 5.0 mg/L in the TCLP extract, was arbitrarily chosen as a demonstration standard for soils, because soils may be more difficult to treat than sludges. These two standards were chosen to provide a range of standards within which the Chemfix technology was expected to operate for contaminated soils.

Sixty-five percent of all samples tested from all areas of the site passed the standard of 0.51 mg/L lead in the TCLP extract. Seventy percent of all samples tested passed the standard of 5.0 mg/L lead in the TCLP extract.

The data from the demonstration indicated substantial reductions in the mobility of lead, copper, and zinc in the treated wastes compared with that in the untreated wastes, as determined by the TCLP. Table 4 shows that the reductions in lead concentrations ranged from 94% in Area E to 99% in Areas A, C, and F. The nature of the TCLP needs to be considered when evaluating these data. The TCLP is used to evaluate a waste's potential for leaching contaminants when the waste is codisposed with municipal wastes. This scenario may not be an appropriate disposal scenario for the PESC site.

The reduction in mobility of PCBs, based on the TCLP, could not be determined since the PCBs did not leach from the raw waste with that extraction procedure. More stringent leaching or extraction tests would be needed to determine the effectiveness of this process for stabilizing PCBs.

The ANS 16.1 test showed that the leachability index of the treated material successfully exceeded the Nuclear Regulatory Commission (NRC) criteria by several orders of magnitude for lead and copper. Because measurable quantities of contaminants leached from the solids, however, information about leaching fluxes from treated material should be considered with site-specific groundwater conditions before applying this technology.

The results of the multiple extraction procedure showed relatively high concentrations of lead in the first extraction from the treated waste. The mean concentration was 330 mg/L lead. This first extraction used the same procedure as the extraction procedure toxicity (EP) test. Based on the EP toxicity test, wastes with lead concentrations exceeding 5.0 mg/L are considered hazardous. Dilution due to groundwater may, however, be considered in decisions regarding delisting of a hazardous waste. Data from later extractions showed much lower concentrations of lead (mean concentrations generally less than 1 mg/L), although the mean concentration increased to 4.3 mg/L in the last extractions.

Chemical Testing

Table 5 summarizes the results of chemical and physical tests on both the untreated and treated wastes. After treatment, the pH of the raw waste, 6.6, increased to 11.5 because of the highly alkaline reagents used in treatment. The treated material was so alkaline that adding acetic acid as part of the TCLP procedure did not lower the pH more than a few tenths of a unit.

Oxidation/reduction potential of the treated waste was less than that of the untreated material. Electrical conductivity was significantly higher in the treated wastes, indicating that ions leached from the treated material. This increase may not be a concern, however, depending on the nature of the ions.

The PCB extraction data showed evidence of partial dechlorination of PCBs. The analysis indicated that heavily chlorinated PCB molecules lost one or more chlorine atoms during the treatment process. The phenomenon, however, may not be due to the solidification/stabilization process, because no byproducts of complete dechlorination were found in the treated matrix. Therefore, no conclusions regarding the effectiveness of the treatment process in dechlorinating PCBs can be drawn.

The air monitoring data suggested that there was no significant volatilization of

Table 4. *Mean Concentration of Lead and Copper from the Chemfix Demonstration*

		Untreated Waste (Total)	*TCLP From Untreated Waste*	*TCLP From Treated Waste*	*Percent Reduction of TCLP Extractable Metal*
Area A					
	Lead	*21,000 mg/kg*	*610 mg/L*	*<0.05 mg/L*	*99*
	Copper	*18,000 mg/kg*	*45 mg/L*	*0.57 mg/L*	*99*
Area C					
	Lead	*140,000 mg/kg*	*880 mg/L*	*2.5 mg/L*	*99*
	Copper	*18,000 mg/kg*	*12 mg/L*	*0.54 mg/L*	*95*
Area E					
	Lead	*92,000 mg/kg*	*740 mg/L*	*47.0 mg/L*	*94*
	Copper	*74,000 mg/kg*	*120 mg/L*	*0.65 mg/L*	*99*
Area F					
	Lead	*11,000 mg/kg*	*390 mg/L*	*0.10 mg/L*	*99*
	Copper	*33,000 mg/kg*	*120 mg/L*	*0.60 mg/L*	*99*

PCBs during the treatment operations at the site; however, it should be noted that the wet, cool weather during the demonstration did not promote volatilization.

Physical Tests

Table 5 also summarizes the results of the physical tests performed on the treated wastes. Weight loss during wet/dry and freeze/thaw cycle testing was less than 1%. These data indicated durability in an exposed environment. Unconfined compressive strength (UCS) values ranged from 27 psi to 307 psi. The EPA guidance for land disposal suggests a minimum UCS of 50 psi for land disposal of solidified/stabilized wastes. The hydraulic conductivity of the treated material was in the range of 10^{-6} cm/sec to 10^{-7} cm/sec. Hydraulic conductivity values should be compared with in-situ permeability measurements to determine if the treated material is less conductive than the material into which it will be placed. Such in-situ permeability measurements were not available from the PESC site because the rocky nature of the soil made it impossible to insert the equipment necessary to obtain in-situ measurements.

An analysis using the specific gravity, bulk density, and moisture content of the treated material yielded a calculated porosity of 32% to 50%.

Finally, an analysis using the mass of material (before and after treatment) and the bulk density (before and after treatment) yielded a calculated volume expansion of 20% to 50% with treatment, which means the volume of the treated material was 20% to 50% greater than the volume of the excavated material. It should be noted that the volume of the excavated material is likely to be more than the volume of the material in-situ. Thus, the total volume expansion from in-situ volume is likely to be more than 20% to 50%.

Costs

The cost of this treatment process is $40 to $80 per ton of raw waste treated, based on the cost information for treatment supplied by Chemfix and the materials-handling costs experienced during the SITE demonstration. This cost does not include the cost of site preparation, equipment transportation to and from the site, and final placement or disposal of the product. Note, also, that the cost of the process depends heavily on the processing rate.

Table 5. *Physical and Chemical Properties of Treated and Untreated Wastes From Area C of Chemfix Demonstration*

Property	*Untreated Wastes*	*Treated Wastes*
Eh (millivolts)	*290*	*24*
Conductivity (μmhos/cm)	*130*	*3,200*
pH	*6.6*	*11.3 to 11.5*
28-day unconfined compressive strength (psi)	*N/A*	*27 to 307*
Wet/dry stress weight loss	*N/A*	*<1%*
Freeze/thaw stress weight loss	*N/A*	*<1%*
Hydraulic conductivity (cm/sec)	*10^{-4} to 10^{-6}*	*10^{-6} to 10^{-7}*

Conclusions

More than 65% of the treated waste samples from the Chemfix solidification/stabilization process met the TCLP leachate levels established for the demonstration. Reductions in leachable lead, as measured by the TCLP test, ranged from 94% to 99%. Data from the ANS 16.1 test successfully exceeded the NRC criteria by several orders of magnitude. Because the treated material leached measurable quantities of lead, however, the information from the ANS 16.1 and other leaching and extraction tests may be considered with site-specific groundwater conditions before applying this technology to a specific site.

The Chemfix process generally produced treated material with acceptable physical properties. The treated material had properties that indicated long-term durability in exposed environments. Volume increases in the excavated material ranged from 20% to 50%.

☆U. S. GOVERNMENT PRINTING OFFICE: 1991/548-028/20164

*The EPA Project Manager, **Ed Barth**, is with the Risk Reduction Engineering Laboratory, Cincinnati, OH 45268 (see below).*

The complete report consists of two volumes, entitled "Technology Evaluation Report: Chemfix Technologies, Inc., Solidification/Stabilization Process, Clackamas, Oregon."

"Volume I" (Order No. PB 91-127696; Cost: $23.00, subject to change) discusses the results of the SITE demonstration.

"Volume II" (Order No. PB 90-274127, Cost: $45.00, subject to change) contains the sampling and analytical data and the quality assurance data.

Both volumes of this report will be available only from:

National Technical Information Service
5285 Port Royal Road
Springfield, VA 22161
Telephone: 703-487-4650

A related report, entitled "Applications Analysis Report: CHEMFIX Solidification/Stabilization Process," which discusses application and costs, is under development.

The EPA Project Manager can be contacted at:

Risk Reduction Engineering Laboratory
U.S. Environmental Protection Agency
Cincinnati, OH 45268