United States Environmental Protection Agency | Office of Research and Development | Office of Solid Waste and Emergency Response | EPA/540/S-92/003 February 1992

EPA Ground Water Issue

In-Situ Bioremediation of Contaminated Ground Water

J.L. Sims[a], J.M. Suflita[b], and H.H. Russell[c]

An emerging technology for the remediation of ground water is the use of microorganisms to degrade contaminants which are present in aquifer materials. Understanding the processes which drive *in-situ* bioremediation, as well as the effectiveness and efficiency of the utilization of these systems, are issues which have been identified by the Regional Superfund Ground Water Forum as concerns of Superfund decision makers. The Forum is a group of ground-water scientists and engineers, representing EPA's Regional Superfund Offices, organized to exchange up-to-date information related to ground-water remediation at Superfund sites.

Although *in-situ* bioremediation has been used for a number of years in the restoration of ground water contaminated by petroleum hydrocarbons, it has only been in recent years that this technology has been directed toward other classes of contaminants. Research has contributed greatly to understanding the biotic, chemical, and hydrologic parameters which contribute to or restrict the application of *in-situ* bioremediation, and has been successful at a number of locations in demonstrating its effectiveness at field scale.

This document is one in a series of *Ground Water Issue* papers which have been prepared in response to needs expressed by the Ground Water Forum. It is based on findings from the research community in concert with experience gained at sites undergoing remediation. The intent of the document is to provide an overview of the factors involved in *in-situ* bioremediation, outline the types of information required in the application of such systems, and point out the advantages and limitations of this technology.

For further information contact Dr. Hugh Russell, RSKERL, FTS 743-2444, commercial number (405) 332-8800.

Summary

In-situ bioremediation, where applicable, appears to be a potential cost-effective and environmentally acceptable remediation technology. Suflita (1989) identified characteristics of the ideal candidate site for successful implementation of *in-situ* bioremediation. These characteristics included: (1) a homogeneous and permeable aquifer; (2) a contaminant originating from a single source; (3) a low ground-water gradient; (4) no free product; (5) no soil contamination; and (6) an easily degraded, extracted, or immobilized contaminant. Obviously, few sites meet these characteristics. However, development of information concerning site specific geological and microbiological characteristics of the aquifer, combined with knowledge concerning potential chemical, physical, and biochemical fate of the wastes present, can be used to develop a bioremediation strategy for a less-than-ideal site.

Introduction

In-situ bioremediation is a technology to restore aquifers contaminated with organic compounds. Organic contaminants found in aquifers can be dissolved in water, attached to the aquifer material, or as freephase or residual phase liquids referred to as NAPLs which are liquids that do not readily dissolve in water (Palmer and Johnson, 1989c). Generally,

[a] *Soil Scientist, Utah Water Research Laboratory, Utah State University*
[b] *Professor, Dept. of Botany and Microbiology, University of Oklahoma*
[c] *Research Microbiologist, Robert S. Kerr Environmental Research Laboratory*

Superfund Technology Support Center for Ground Water

Robert S. Kerr Environmental Research Laboratory
Ada, Oklahoma

Technology Innovation Office
Office of Solid Waste and Emergency Response, US EPA, Washington, DC

Walter W. Kovalick, Jr., Ph.D.
Director

Printed on Recycled Paper

U.S. Environmental Protection Agency
Region 5, Library (PL-12J)
77 West Jackson Boulevard, 12th Floor
Chicago, IL 60604-3590

NAPLs are subdivided into two classes: those that are lighter than water (LNAPLs density <1.0), and those with a density greater than water (DNAPLs density >1.0). LNAPLs include hydrocarbon fuels, such as gasoline, heating oil, kerosene, jet fuel, and aviation gas. DNAPLs include chlorinated hydrocarbons, such as 1,1,1-trichloroethene, carbon tetrachloride, chlorophenols, chlorobenzenes, tetrachloroethylene, PCBs, and creosote.

In this discussion, a technical approach is presented to assess the potential implementation of bioremediation at a specific site contaminated with an organic compound. The approach consists of (1) a site investigation to determine the transport and fate characteristics of organic waste constituents in a contaminated aquifer, (2) performance of treatability studies to determine the potential for bioremediation and to define required operating and management practices, (3) development of a bioremediation plan based on fundamental engineering principles, and (4) establishment of a monitoring program to evaluate performance of the remediation effort.

The pattern of contamination from a release of contaminants into the subsurface environment, as would occur from an underground leaking storage tank containing NAPLs, is complex (Figure 1) (Palmer and Johnson, 1989c; Wilson et al. 1989). As contaminants move through the unsaturated zone, a portion is left behind, trapped by capillary forces. If the release contains volatile contaminants, a plume of vapors forms in the soil atmosphere in the vadose zone. If the release contains NAPLs less dense than water (LNAPLs), they may flow by gravity down to the water table and spread laterally. The oily phase can exist either as a free product, which can be recovered by pumping, or as a residual phase after the pore spaces have been drained. Contaminants associated with NAPLs can also partition into the aquifer's solid phase or in the vapor phase of the unsaturated zone. If the release contains DNAPLs, these contaminants can penetrate to the bottom of an aquifer, forming pools in depressions. In either case, when ground water comes into contact with any of these phases, the soluble components are dissolved into the water phase.

There are a number of techniques available to remediate ground water contaminated with organic compounds including: physical containment such as slurry walls, grout curtains, and sheet pilings (Ehrenfield and Bass, 1984); hydrodynamic control using pumping wells to manipulate the hydraulic gradient or interceptor systems (Canter and Knox, 1985); several methods of free product recovery (Lee and Ward 1986); and (4) extraction of contaminated ground water followed by treatment at the surface (Keely, 1989; U.S. EPA, 1989b).

Alternatively, contaminated ground water can be treated in place, without extraction using *in-situ* chemical treatment or biological treatment with microorganisms (Thomas et al., 1987c). An advantage of in-situ treatment strategies is that treatment can take place in multiple phases.

In-situ chemical treatment techniques are similar to methods used to treat contaminated materials after withdrawal or excavation, but are directly applied to the materials in place (Ehrenfield and Bass, 1984). Chemical treatment may involve neutralizing, precipitating, oxidizing or reducing contaminants

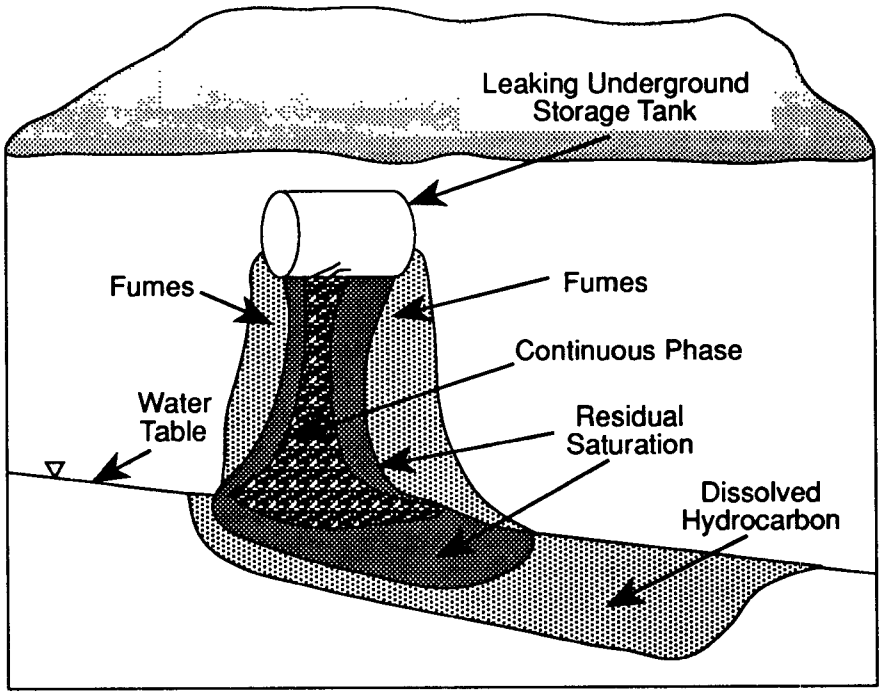

Figure 1. Regions of contamination in a typical release from an underground storage tank (Wilson et al., 1989).

by injecting reactive materials into a contaminated leachate plume through injection wells, but may be limited by mass transport and concentration dependence. For treatment of shallow contaminated aquifers, permeable treatment beds containing reactive materials such as activated carbon or ion exchange resins may be constructed downgradient to intercept and treat the contaminated plume.

Biological *in-situ* treatment of aquifers is usually accomplished by stimulation of indigenous microorganisms to degrade organic waste constituents present at a site (Thomas and Ward, 1989). The microorganisms are stimulated by injection of inorganic nutrients and, if required, an appropriate electron acceptor, into aquifer materials.

Most biological *in-situ* treatment techniques in use today are variations of techniques developed by researchers at Suntech to remediate gasoline-contaminated aquifers. The Suntech process received a patent titled Reclamation of Hydrocarbon Contaminated Ground Waters (Raymond, 1974). The process involves the circulation of oxygen and nutrients through a contaminated aquifer using injection and production wells (Lee et al., 1988). Placement of the wells is dependent on the area of contamination and the porosity of the formation, but are usually no more than 100 feet apart. The nutrient amendment consists of nitrogen, phosphorus, and other inorganic salts, as required, at concentrations ranging from 0.005 to 0.02 percent by weight. Oxygen for use as an electron acceptor in microbial metabolism is supplied by sparging air into the ground water. If the growth rate of microorganisms is 0.02 g/l per day, the process is estimated to require approximately 6 months to achieve 90 percent degradation of the hydrocarbons present. Cleanup is expected to be most efficient for ground waters contaminated with less than 40 ppm of gasoline. After termination of the process, the numbers of microbial cells are expected to return to background levels.

In addition to stimulating indigenous microbial populations to degrade organic waste constituents, another technique, which has not yet been fully demonstrated, is the addition of microorganisms with specific metabolic capabilities to a contaminated aquifer (Lee et al., 1988). Populations that are specialized in degrading specific compounds are selected by enrichment culturing or genetic manipulation. Enrichment culturing involves exposure of microorganisms to increasing concentrations of a contaminant or mixture of contaminants. The type of organism (or group of organisms) that is selected or acclimates to the contaminant depends on the source of the inoculum, the conditions used for the enrichment, and the substrate. Examples of changes that may occur during an acclimation period include an increase in population of contaminant degraders, a mutation that codes for new metabolic capabilities, and the induction or derepression of enzymes responsible for degradation of specific contaminants (Aelion et al., 1987).

It is important to note that the inoculation of a specialized microbial population into the environment may not produce the desired degree of degradation for a number of reasons (Goldstein et al., 1985; Lee et al., 1988; Suflita 1988b). Factors that may limit the success of inoculants include contaminant concentration, pH, temperature, salinity, and osmotic or hydrostatic pressure. They may act alone or collectively to inhibit the survival of the microorganisms. The subsurface environment may also contain substances or other organisms that are toxic or inhibitory to the growth and activity of the inoculated organisms. In addition, adequate mixing to ensure contact of the organism with the specific organic constituent may be difficult to achieve at many sites. Successful inoculation of introduced organisms into simpler, more controllable environments (e.g., bioreactors such as waste-water treatment plants) to accomplish degradation has been demonstrated. However, effectiveness of inoculation into uncontrolled and poorly accessible environments such as the subsurface is much more difficult to achieve, demonstrate and assess (Thomas and Ward, 1989).

Genetic manipulation of microorganisms to produce specialized populations to degrade specific contaminants involves the acceleration and focusing of the process of evolution (Kilbane, 1986; Lee et al., 1988). Genetic manipulation can be accomplished by exposure of organisms to a mutagen, followed by enrichment culturing to isolate a population with specialized degradative capabilities, or by the use of DNA recombinant technology to change the genetic structure of a microorganism. The use of genetically engineered organisms in the environment is illegal without prior government approval (Thomas and Ward, 1989). In addition, the introduction of genetically engineered organisms into the environment would meet the same kind of barriers to success as organisms developed by enrichment culturing, or more.

Additional methods that have been suggested to enhance biodegradation include: cross acclimation, which involves the addition of a readily degradable substrate to aid in the biodegradation of more recalcitrant molecules; and analog enrichment, which involves the addition of a structural analog of a specific contaminant in order to induce degradative enzyme activity that will affect both the analog and the specific contaminant (Suflita, 1989a).

In most contaminated aquifers, the hydrogeologic system is so complex, in terms of site characteristics and contaminant behavior, that a successful remediation process must rely on the use of multiple treatment technologies (Wilson et al., 1986). The combination of several technologies, in series or in parallel, into a treatment process train may be necessary to restore ground-water quality to a required level. Barriers and hydrodynamic containment controls alone serve as only temporary plume control measures, but can be integral parts of withdrawal and treatment or *in-situ* treatment measures.

A possible treatment train might consist of: (1) source removal by excavation and disposal; (2) free product recovery to reduce the mass in order to decrease the amount of contaminants requiring treatment; and (3) *in-situ* treatment of remaining contamination. When applicable, biological *in-situ* treatment offers the advantage of partial or complete destruction of organic contaminants, rather than transfer or partitioning of contaminants to different phases of the subsurface.

In-Situ Bioremediation Technical Process

The *in-situ* bioremediation technical process consists of the following activities:

1. performance of a thorough site investigation;
2. performance of treatability studies;

3. removal of source of contamination and recovery of free product;
4. design and implementation of the bioremediation technology; and
5. evaluation of performance of the technology through a monitoring program (Lee and Ward, 1986; Lee et al., 1988).

A thorough site investigation in which biological, contaminant, and aquifer characterization data are integrated, is essential for the successful implementation of a bioremediation system. Biological characterization is required to determine if a viable population of microorganisms is present which can degrade the contaminants of concern. An assessment of waste characteristics provides information for determining whether bioremediation, either alone or as part of a treatment train, is feasible for the specific contaminants at the site. Aquifer characteristics provide information on the suitability of the specific environment for biodegradative processes, as well as information required for hydraulic design and operation of the system.

Bioremediation of an aquifer contaminated with organic compounds can be accomplished by the biodegradation of those contaminants and result in the complete mineralization of constituents to carbon dioxide, water, inorganic salts, and cell mass, in the case of aerobic metabolism; or to methane, carbon dioxide, and cell mass, in the case of anaerobic metabolism. However, in the natural environment, a constituent may not be completely degraded, but transformed to an intermediate product or products, which may be equally or more hazardous than the parent compound. In any event, the goal of *in-situ* bioremediation is detoxification of a parent compound to a product or products that are no longer hazardous to human health and the environment.

In 1973 a review of ground-water microbiology was published by researchers at the U.S. EPA Robert S. Kerr Environmental Research Laboratory (RSKERL) (Dunlap and McNabb, 1973) that stimulated research into microbiology of the subsurface. Previously, biological activity in the subsurface environment below the root zone was considered unlikely and that microbial activity in the subsurface could not be of significant importance (Lee et al., 1986). However, as methods for sampling unconsolidated subsurface soils and aquifer materials without contamination from surface materials (Dunlap et al., 1977, Wilson et al., 1983, McNabb and Mallard, 1984) as well as methods to enumerate subsurface microbial organisms (Ghiorse and Wilson, 1988) were developed, evidence for microbial activity in the subsurface became convincing.

Bacteria are the predominant form of microorganisms that have been found in the subsurface, although a few higher life forms have been detected (Ghiorse and Wilson, 1988; Suflita, 1989a). The majority of microorganisms in pristine and uncontaminated aquifers are oligotrophic, because organic materials available for metabolism are likely present in low concentrations or difficult to degrade. Organic materials that enter uncontaminated subsurface environments are often refractory humic substances that resist biodegradation while moving through the unsaturated soil zone.

Many subsurface microorganisms are metabolically active and can use a wide range of compounds as carbon and energy sources, including xenobiotic compounds (Lee et al., 1988). Compounds such as acetone, ethanol, isopropanol, tert-butanol, methanol, benzene, chlorinated benzenes, chlorinated phenols, polycyclic aromatic hydrocarbons, and alkylbenzenes have been shown to degrade in samples of subsurface aquifer materials.

The rate and extent of biotransformation of organic compounds at a specific site are controlled by geochemical and hydraulic properties of the subsurface (Wilson et al., 1986). Populations of microorganisms increase until limited by a metabolic requirement, such as mineral nutrients, substrates for growth, or suitable electron acceptors. At this point, the rate of transformation of an organic material is controlled by transport processes that supply the limiting factor. Since most subsurface microorganisms are associated with the solid phase, the limiting factor must be delivered to the microbes by advection and diffusion through the mobile phases. Below the water table, all transport must be through liquid phases, and as a result, aerobic metabolism may be severely limited by the very low solubility of oxygen in water. As oxygen becomes limiting, aerobic respiration slows. However, other groups of organisms become active and continue to degrade contaminating organic materials. Under conditions of anoxia, anaerobic bacteria can use organic chemicals or several inorganic anions as alternate electron acceptors (Suflita, 1989a).

Even though microorganisms may be present in a contaminated subsurface environment and have demonstrated the potential to degrade contaminants in laboratory studies, they may not be able to degrade these contaminants without a long period of acclimation. Acclimation results in development of the capability to accomplish degradation.

In summary, the rate of biological activity in the subsurface environment is generally controlled by:

1. the concentration of required nutrients in the mobile phases;
2. the advective flow of the mobile phases or the steepness of concentration gradients within the phases;
3. opportunity for colonization in the subsurface by metabolically active organisms or groups of organisms capable of degradation of the specific contaminants present;
4. presence, availability, and activity of appropriate enzymes for degradation of specific contaminants present; and,
5. toxicity exhibited by the waste or co-occurring material(s) (Wilson et al., 1986; Suflita, 1989a).

Methods to Collect Biological Samples

Traditionally, unconsolidated soils or sediments are sampled through a hollow-stem auger with a split-spoon core barrel or a conventional thin-walled sample tube (Acker 1974, Scalf et al., 1981; Wilson et al., 1989). The hollow-stem auger acts as a temporary casing to keep the borehole open until a sample can be acquired. A borehole is drilled down to the depth to be sampled and a core barrel is inserted through the annular opening in the auger and driven or pushed while rotating the auger into the earth to collect the sample. These tools are effective in both unsaturated and saturated cohesive

materials, but are not as effective in unconsolidated sands as it is difficult to keep aquifer material out of the hollow stem auger (a phenomenon referred to as "heaving") and to keep the sample in the core barrel while the sample is being retrieved to the surface. In recent years there have been many improvements in sampling the subsurface, particularly with respect to heaving materials (Zapico et al., 1987; Leach et al., 1988)

Just as it is important to protect the integrity of samples while coring, it is as important to assure integrity while transferring sample material to containers which are to be returned to the laboratory for analysis. To prevent contamination of aquifer material samples from introduced microorganisms and to protect samples from the atmosphere to prevent injury of anaerobic microorganisms, samples are extruded inside a nitrogen-filled glove box (Figure 2). The glove box is prepared for sample collection by filling it with the desired number of sterile sampling jars and sterile paring devices, sealing the box, and then purging it with nitrogen gas. A slight positive pressure of nitrogen is maintained in the box by purging during extrusion and collection of the samples.

Biological Characterization

A wide variety of methods are available to detect, enumerate, and estimate biomass and metabolic activities of subsurface microorganisms. These methods include: direct light and epifluorescence microscopy, viable counts (e.g., plate counts, most probable number counts, and enrichment culture procedures), and biochemical indicators of metabolic activity such as ATP, GTP, phospholipid, and muramic acid (Ghiorse and Wilson 1988). Levels of microorganisms ranging from 10^6 to 10^7 cells/g of dry aquifer material have been reported from uncontaminated shallow aquifers (Ghiorse and Balkwill, 1985; Lee et al., 1988). Often the distribution of microorganisms in aquifers, as it is in soils, is sporadic and nonuniform, indicating the presence of micro-environments conducive to growth and activity.

Waste Characterization

The source of contamination is usually the primary object of remedial activities (Wilson et al. 1989) as the treatment of plume areas will not be effective if the source continues to release contaminants. Information concerning: (1) the areal location of the source area and contaminant plumes; (2) amounts of contaminants in the source area; and (3) amounts of contaminants released into the subsurface are required to select and apply an appropriate remediation technology and to determine cost and time requirements for completion of a remedial action. If *in-situ* bioremediation is selected as the remedial technology, information concerning the amount and distribution of contamination is used in conjunction with hydrogeological site characteristics to locate injection and extraction wells and to optimize pumping rates and concentrations of amendments, such as nutrients and alternate electron acceptors.

The use of conventional monitoring wells can generally accurately define the geometry of the ground-water plume (Palmer and Johnson, 1989a; Wilson et al., 1989). However, there are important factors that control the quality of information collected from a network of monitoring wells, which include the amount of well purging done prior to sampling (Barcelona and Helfrich, 1986), method of sampling (Stolzenburg and Nichols, 1985), and method of well construction and installation (Keely and Boateng, 1987). Methods for ground-water sampling are presented by Scalf et al. (1981), Ford et al. (1984), and Barcelona et al. (1985). Other methods used for detecting contaminant plumes in the subsurface include geophysical techniques such as surface resistivity and electromagnetic surveys, chemical time-series sampling tests (Palmer and Johnson, 1989a), and vapor

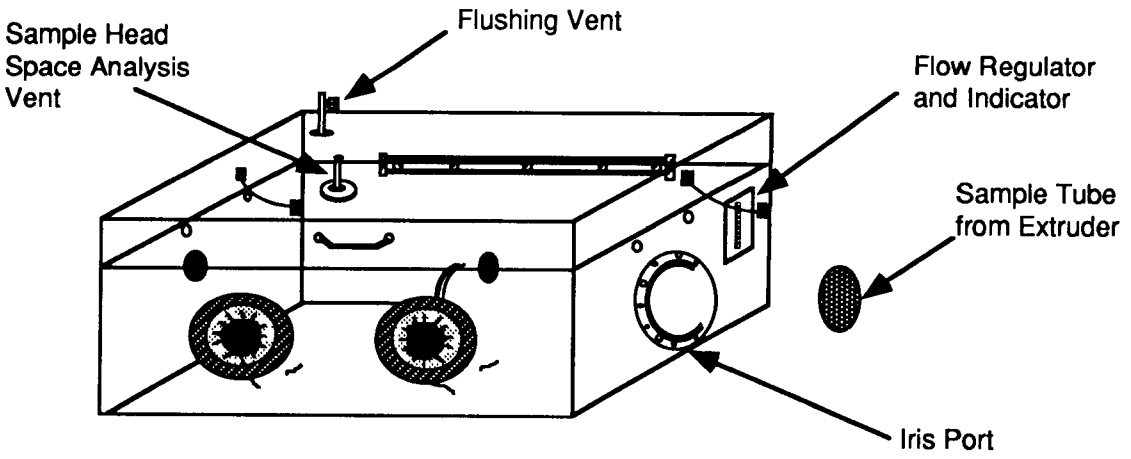

Figure 2. Field sampling glove box (Wilson, et al., 1989).

monitoring wells (Devitt et al., 1988; Palmer and Johnson, 1989b).

The distribution of the source area and the extent of contamination should also be characterized by collecting cores of the solid aquifer materials. Precise information is required to define the vertical extent of contamination so that nutrients, oxygen and other amendments injected into the aquifer contact the contaminants. Injection into a clean part of the aquifer is a wasted effort and may give the false impression that the region of aquifer between the injection and recovery wells is clean (Figure 3).

Additional characteristics of waste contaminants present at a specific site that should be considered are related to their environmental fate and behavior in specific aquifer materials (Armstrong, 1987; Johnson et al., 1989). These characteristics include physical and chemical properties that determine recalcitrance, reactivity, and mobility of contaminants at the site. Information concerning partitioning of contaminants between aquifer solids and water is especially important. This information is used to evaluate the extent and rate of release of contaminants into the ground water, their mobility, and the quantity of electron acceptors and inorganic nutrients that must be supplied to support *in-situ* bioremediation.

Aquifer Characterization

Important geological characteristics of an aquifer that should be considered during a site investigation include the composition and heterogeneity of aquifer material, specific yield, hydraulic connections to other aquifers, magnitude of water table fluctuations, ground-water flow rate and direction, hydraulic conductivity distribution, permeability, bulk density, and porosity (Lee et al., 1988; Palmer and Johnson, 1989a).

Hydraulic conductivity (K) is an especially important characteristic since the aquifer must be permeable enough to allow the transport of electron acceptors and inorganic nutrients to the microorganisms in the zone of contamination. Permeable aquifer systems, i.e., aquifers with K values of 10^{-4} cm/sec or greater, are usually considered good candidates for *in-situ* bioremediation (Thomas and Ward, 1989).

Hydraulic conductivity of an aquifer can be determined by a variety of methods (Thomas et al., 1987b, Palmer and Johnson, 1989a). Knowledge of K values at multiple locations is necessary because of the heterogeneity of aquifer materials. Laboratory methods are also available for determining hydraulic conductivity, but field-measured values represent average properties over a larger volume and utilize less disturbed materials (Palmer and Johnson, 1989a).

Aquifer characteristics play an extremely important role in determining the effectiveness of *in-situ* bioremediation. Even in the presence of organisms acclimated to the specific waste constituents present in an aquifer, biodegradation of contaminants may be limited by unfavorable aquifer characteristics that affect microbial activity including:

1. insufficient concentrations of dissolved oxygen for aerobic metabolism of compounds susceptible to aerobic degradation;
2. excessive oxygen that inhibits anaerobic biodegradation of many halogenated compounds in the subsurface;

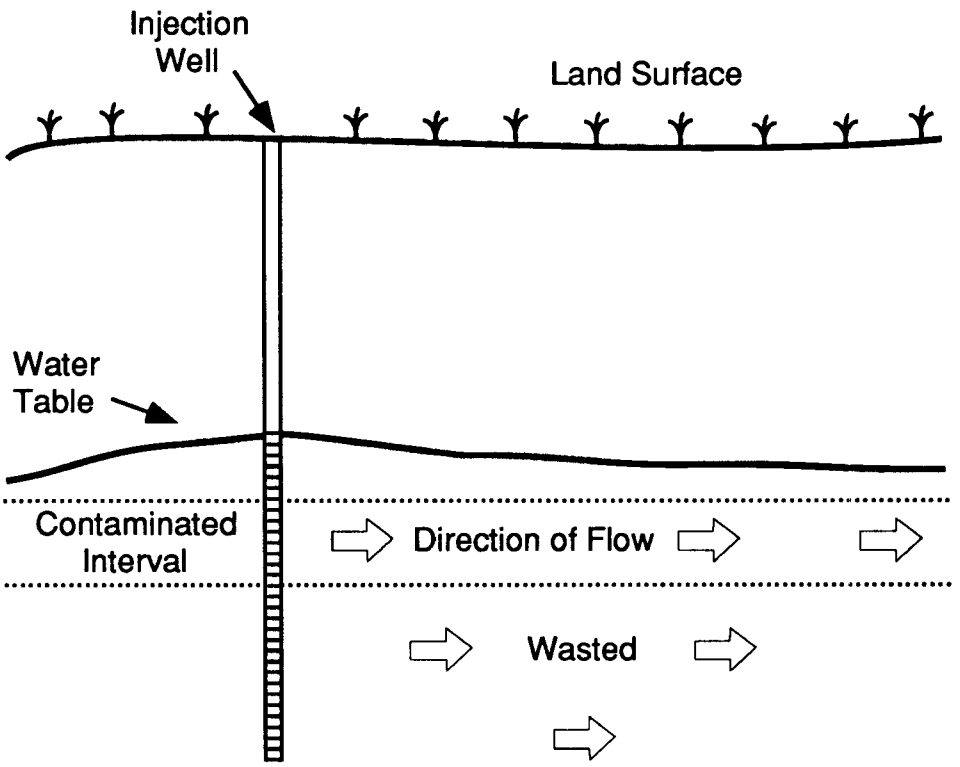

Figure 3. The value of accurately locating the contaminated interval (Wilson et al., 1989).

3. lack of a suitable alternative electron acceptor, if oxygen is unavailable or not usable;
4. insufficient inorganic nutrients, such as nitrogen, phosphorus, and trace minerals;
5. presence of toxic metals or other toxicants; and
6. other aquifer characteristics, such as pH, buffering capacity, salinity, osmotic or hydrostatic pressures, radiation, sorptive capacity, and temperature (Armstrong, 1987; Lee et al., 1988).

Treatability Study

A treatability study is designed to determine if bioremediation is possible at a specific site, and whether there are any biological barriers to attaining clean-up goals. Even though the scientific literature may indicate that a specific chemical is likely to biodegrade in the environment, a treatability study using site specific variables should be used to confirm that contention (Suflita, 1989a). Microcosms are generally used to conduct treatability studies. Pritchard (1981) defined a microcosm as "a calibrated laboratory simulation of a portion of a natural environment in which environmental components, in as undisturbed a condition as possible, are enclosed within definable physical and chemical boundaries and studied under a set of laboratory conditions." Microcosms may range from simple batch incubation systems to large and complex flow-through devices (Suflita, 1989a).

Results of a treatability study can also provide an estimate of the rate and extent of remediation that can be attained if microorganisms are not limited by the rate of supply of an essential growth factor or by the presence of an unfavorable environmental factor.

Treatability studies to determine inorganic nutrient and electron acceptor requirements of subsurface microorganisms present at a specific site should be conducted using samples of subsurface solids as well as the ground water. Nutrient and electron acceptor requirements that will enable indigenous microorganisms to efficiently degrade organic contaminants present at a specific site can be determined by incubating contaminated subsurface materials with combinations of levels of inorganic nutrients and electron acceptors. Studies should be performed under conditions that simulate field environmental conditions. Results of the studies are used to design the bioremediation program as well as to optimize the treatment strategy.

Design and Implementation of an *In-Situ* Bioremediation System

Before implementation of an *in-situ* bioremediation system, the source of contamination in the soil and in the ground water should be removed as much as possible. In the case of a liquid fuel spill, source removal may consist of recovery of LNAPL free product from the ground water. Depending on the characteristics of the aquifer and contaminants, free product can account for as much as 91 percent of the spilled hydrocarbon, with the remaining hydrocarbon (accounting for 9-40 percent of the spill) sorbed to the soil or dissolved in the ground water (Lee et al., 1986).

Physical recovery techniques, based on the fact that LNAPL hydrocarbons are relatively insoluble in and less dense than water, are used to remove free product from a contaminated site. Physical recovery often accounts for only 30 to 60 percent of spilled hydrocarbon before yields decline. Continued pumping of recovery wells may be used to contain a spill while *in-situ* bioremediation is being implemented. If a spill is comprised of DNAPLs, which may sink to the bottom of the aquifer, physical recovery may be considerably more difficult to achieve.

Information from the performance of site characterization and treatability studies may be integrated with the use of comprehensive mathematical modeling to estimate the expected rates and extent of treatment at the field scale (Javandel, 1984; Keely, 1987). The specific model chosen should incorporate biological reaction rates, stoichiometry of waste transformation, mass-transport considerations, and spatial variability in treatment efficiency (U.S. EPA, 1989a).

After assessment of site characterization and treatability studies, if results indicate that *in-situ* bioremediation is applicable to the site and will be an effective clean-up technology, the information collected is used to design and implement the system.

When *in-situ* bioremediation of a contaminant ground-water plume involves using methods to enhance the process, such as the addition of nutrients, additional oxygen sources, or other electron acceptors, the use of hydraulic controls to minimize migration of the plume during the *in-situ* treatment process may be required (Thomas et al., 1987c; U.S. EPA, 1989a). In general, hydraulic control systems are generally less costly and time consuming to install than physical containment structures such as slurry walls. Well systems are also more flexible, for pumping rates and well locations can be altered as the system is operated over a period of time.

Pumping-injection systems can be used to: (1) create stagnation zones at precise locations in a flow field; (2) create gradient barriers to pollution migration; (3) control the trajectory of a contaminant plume; and (4) intercept the trajectory of a contaminant plume (Shafer, 1984). The choice of a hydraulic control method depends on geological characteristics, variability of aquifer hydraulic conductivities, background velocities, and sustainable pumping rates (Lee et al. 1988). Typical patterns of wells that are used to provide hydraulic controls include: (1) a pair of injection-production wells; (2) a line of downgradient pumping wells; (3) a pattern of injection-production wells around the boundary of a plume; and (4) the "double-cell" hydraulic containment system. The "double-cell" system utilizes an inner cell and an outer recirculation cell, with four cells along a line bisecting the plume in the direction of flow (Wilson, 1984).

Well systems also serve as injection points for addition of the materials used for enhancement of microbial activity and for control of circulation through the contaminated zone. The system usually includes injection and production wells and equipment for the addition and mixing of the nutrients (Lee et al., 1988). A typical system in which microbial nutrients are mixed with ground water and circulated through the contaminated portion of the aquifer through a series of injection and recovery wells is illustrated in Figure 4 (Raymond et al., 1978; Thomas and Ward, 1989).

Materials can also be introduced to the aquifer through the use of infiltration galleries (Figure 5) (Brenoel and Brown,

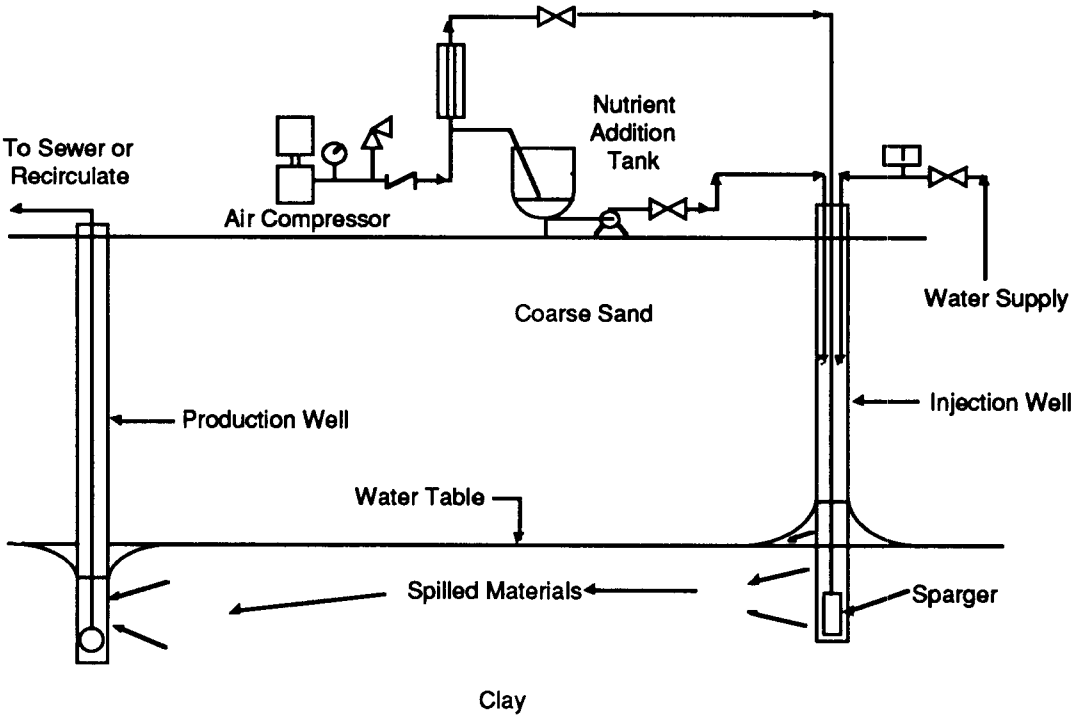

Figure 4. Typical schematic for aerobic subsurface bioremediation (Thomas and Ward, 1989).

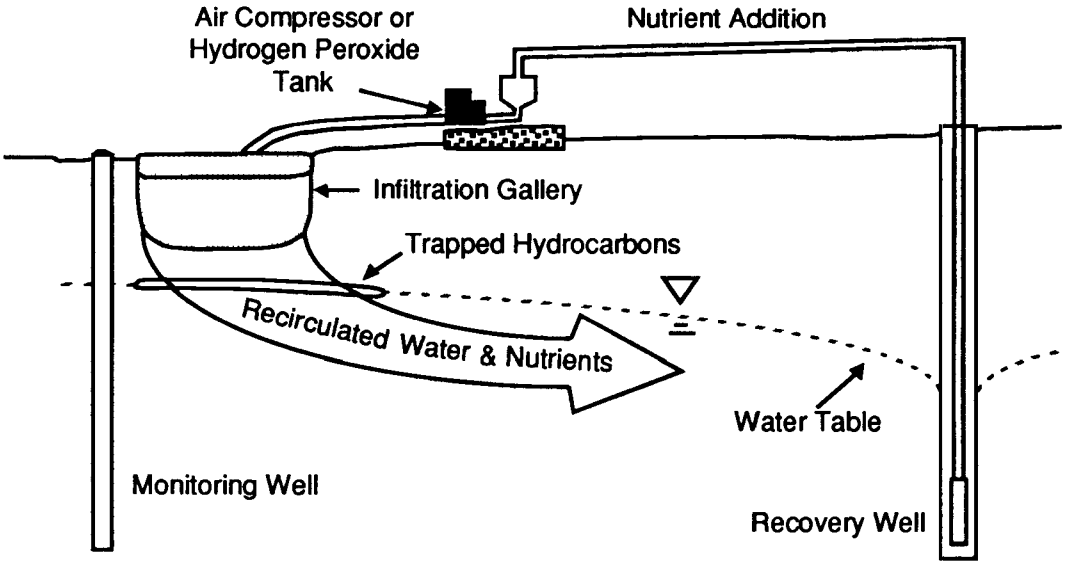

Figure 5. Use of infiltration gallery for recirculation of water and nutrients in in-situ bioremediation (Thomas and Ward, 1989).

1985; Thomas and Ward, 1989). Infiltration galleries allow movement of the injection solution through the unsaturated zone as well as the saturated zone, resulting in potential treatment of source materials that may be trapped in the pore spaces of the unsaturated zone.

Amendments to the aquifer are added to the contaminated aquifer in alternating pulses. Inorganic nutrients are usually added first through the injection system, followed by the oxygen source. Simultaneous addition of the two may result in excessive microbial growth close to the point of injection and consequent plugging of the aquifer. High concentrations of hydrogen peroxide (greater than 10%) can be used to remove biofouling and restore the efficiency of the system.

Operations Monitoring

Both the operation and effectiveness of the system should be monitored (Lee et al., 1988). Operational factors of importance include the delivery of inorganic nutrients and electron acceptor, the point of the delivery within the aquifer in relation to the contaminated portion of the plume, and the effectiveness of containment and control of the contaminated plume.

Measurements of dissolved oxygen and nutrient levels in ground-water samples are recommended to assess whether or not bioremediation is being accomplished. Increases in microbial activities in samples of aquifer materials may be quantified relative to plume areas prior to treatment, areas within the plume that did not receive treatment, and control areas outside the plume. Carbon dioxide levels in ground-water samples may also be a useful indicator of microbial activity (Suflita, 1989b).

Measurement of contaminant levels should indicate that concentrations of contaminants are decreasing in areas receiving treatment and remaining relatively unchanged in areas that are not. If degradation pathways of specific contaminants are known, measurement of presence and concentrations of metabolic products may be used to determine whether or not bioremediation is occurring. Both soil and ground-water samples should be collected and analyzed to develop a thorough evaluation of treatment effectiveness. The use of appropriate control samples, e.g., assays of untreated areas or areas outside the plume, is highly recommended to confirm the effectiveness of the bioremediation technology (Suflita, 1989b).

The frequency of sampling should be related to the time expected for significant changes to occur along the most contaminated flow path (U.S. EPA, 1989a). Important considerations include time required for water to move from injection wells to monitoring wells, seasonal variations in water table elevation or hydraulic gradient, changes in the concentration of dissolved oxygen or alternative electron acceptor, and costs of monitoring.

Advantages and Limitations in the Use of *In-Situ* Bioremediation

There are a number of advantages and disadvantages in the use of *in-situ* bioremediation (Lee et al., 1988). Unlike other aquifer remediation technologies, it can often be used to treat contaminants that are sorbed to aquifer materials or trapped in pore spaces. In addition to treatment of the saturated zone, organic contaminants held in the unsaturated and capillary zones can be treated when an infiltration gallery is used.

The time required to treat subsurface pollution using *in-situ* bioremediation can often be faster than withdrawal and treatment processes. A gasoline spill was remediated in 18 months using *in-situ* bioremediation, while pump-and-treat techniques were estimated to require 100 years to reduce the concentrations of gasoline to potable water levels (Raymond et al., 1986). *In-situ* bioremediation often costs less than other remedial options. The areal zone of treatment using bioremediation can be larger than with other remedial technologies because the treatment moves with the plume and can reach areas that would otherwise be inaccessible.

There are also disadvantages to *in-situ* bioremediation programs (Lee et al., 1988). Many organic compounds in the subsurface are resistant to degradation. *In-situ* bioremediation usually requires an acclimated population of microorganisms which may not develop for recent spills or for recalcitrant compounds. Heavy metals and toxic concentrations of organic compounds may inhibit activity of indigenous microorganisms. Injection wells may become clogged from profuse microbial growth resulting from the addition of nutrients and oxygen.

In-situ bioremediation is difficult to implement in low-permeability aquifers that do not permit the transport of adequate supplies of nutrients or oxygen to active microbial populations. In addition, bioremediation projects require continuous monitoring and maintenance for successful treatment.

References

Aelion, C. M., C. M. Swindoll, and F. K. Pfaender. 1987. Adaptation to and Biodegradation of Xenobiotic Compounds by Microbial Communities from a Pristine Aquifer. Appl. Environ. Microbiol. 53:2212-2217.

Acker, W. L., III. 1974. Basic Procedures for Soil Sampling and Core Drilling. Acker Drill Co. Scranton, PA.

Armstrong, J. 1987. Some Problems in the Engineering of Groundwater Cleanup. p. 110-120. In: N. Dee, W. F. McTernan, and E. Kaplan (eds.) Detection, Control, and Renovation of Contaminated Ground Water. Am. Soc. Civil Eng., New York, NY.

Barcelona, M.J. and J.A. Helfrich. 1986. Well Construction and Purging Effects on Ground-Water Samples. Environ. Sci. Technol. 20:1179-1184.

Barcelona, M.J., J.P. Gibb, J.A. Helfrich, and E.E. Garske. 1985. Practical Guide for Ground-Water Sampling. EPA/600/2-85/104, Robert S. Kerr Environmental Research Laboratory, U.S. Environmental Protection Agency, Ada, OK.

Brenoel, M., and R.A. Brown. 1985. Remediation of a Leaking Underground Storage Tank with Enhanced Bioreclamation. Proc., Fifth National Symp. on Aquifer Restoration and Ground Water Monitoring. National Water Well Assoc., Worthington, OH.

Canter, L.W., and R.C. Knox. 1985. Ground Water Pollution Control. Lewis Publishers, Chelsea, MI.

Devitt, D.A., R.B. Evans, W.A. Jury, T.H. Starks, B. Eklund, A. Ghalsan. 1988. Soil Gas Sensing for Detection and Mapping of Volatile Organics. EPA/600/8-87/036, Environmental Monitoring and Support Laboratory, U.S. Environmental Protection Agency, Las Vegas, NV.

Dunlap, W.J. and J.F. McNabb. 1973. Subsurface Biological Activity in Relation to Ground Water Pollution. EPA-660/2-73-014, Robert S. Kerr Environmental Research Laboratory, U.S. Environmental Protection Agency, Ada, OK.

Dunlap, W.J., J.F. McNabb, M.R. Scalf, and R.L. Cosby. 1977. Sampling for Organic Chemicals and Microorganisms in the Subsurface. EPA-600/2-77-176, Robert S. Kerr Environmental Research Laboratory, U.S. Environmental Protection Agency, Ada, OK.

Ehrenfield, J. and J. Bass. 1984. Evaluation of Remedial Action Unit Operations of Hazardous Waste Disposal Sites. Pollution Technology Review No. 110, Noyes Publications, Park Ridge, NJ.

Ford, P.J., P.J. Turina, and D.E. Seely. 1984. Characterization of Hazardous Waste Sites - A Methods Manual, Volume II: Available Sampling Methods. EPA/600/4-84/076. Robert S. Kerr Environmental Research Laboratory, U.S. Environmental Protection Agency, Ada, OK.

Ghiorse, W.C., and D.L. Balkwill. 1985. Microbiology of Ground Water Environments. In: G. E. Januer (ed.) Progress in Chemical Disinfection II: Problems at the Frontier. State Univ. of New York (SUNY) at Binghamton, Binghamton, NY.

Ghiorse, W.C., and J.T. Wilson. 1988. Microbial Ecology of the Terrestrial Subsurface. Adv. Appl. Microbiol. 33:107-172.

Goldstein, R.M., L.M. Mallory, and M. Alexander. 1985. Reasons for Possible Failure of Inoculation to Enhance Biodegradation. Appl. Environ. Microbiol. 50:977-983.

Javandel, I., C. Doughty, and C.F. Tsang. 1984. Groundwater Transport: Handbook of Mathematical Models. Water Resources Monograph No. 10, Am. Geophysical Union, Washington, DC.

Johnson, R.L., C.D. Palmer, and W. Fish. 1989. Subsurface Chemical Processes. In: Transport and Fate of Contaminants in the Subsurface. EPA/625/4-89/019, Robert S. Kerr Environmental Research Laboratory, U.S. Environmental Protection Agency, Ada, OK.

Keely, J.F. 1987. The Use of Models in Managing Ground-Water Protection Programs. EPA/600/8-87/003. Robert S. Kerr Environmental Research Laboratory, U.S. Environmental Protection Agency, Ada, OK.

Keely, J.F. and K. Boateng. 1987. Monitoring Well Installation, Purging, and Sampling Techniques. Part II: Case Histories. Ground Water 25:427-439.

Kilbane, J.J. 1986. Genetic Aspects of Toxic Chemical Degradation. Microbiol. Ecol. 12:135-145.

Leach, L.E., F.P. Beck, J.T. Wilson, and D.H. Kampbell. 1988. Aseptic Subsurface Sampling Techniques for Hollow-Stem Auger Drilling. Proc., Second National Outdoor Action Conference on Aquifer Restoration, Ground Water Monitoring and Geophysical Methods 1:31-51.

Lee, M.D. and C.H. Ward. 1986. Ground Water Restoration. Report submitted to JACA Corporation, Fort Washington, PA.

Lee, M.D., J.M. Thomas, R.C. Borden, P.B. Bedient, J.T. Wilson, and C. H. Ward. 1988. Biorestoration of Aquifers Contaminated with Organic Compounds. CRC Critical Rev. Environ. Controls 18:29-89.

McNabb, J.F., and G.E. Mallard. 1984. Microbiological Sampling in the Assessment of Groundwater Pollution. In: G. Bitton and C.P. Gerba (eds.), Groundwater Pollution Microbiology. John Wiley & Sons, New York, NY.

Palmer, C.D., and R.L. Johnson. 1989a. Determination of Physical Transport Parameters. In: Transport and Fate of Contaminants in the Subsurface. EPA/625/4-89/019, Robert S. Kerr Environmental Research Laboratory, U.S. Environmental Protection Agency, Ada, OK.

Palmer, C.D., and R.L. Johnson. 1989b. Physical Processes Controlling the Transport of Contaminants in the Aqueous Phase. In: Transport and Fate of Contaminants in the Subsurface. EPA/625/4-89/019, Robert S. Kerr Environmental Research Laboratory, U.S. Environmental Protection Agency, Ada, OK.

Palmer, C.D., and R.L. Johnson. 1989c. Physical Processes Controlling the Transport of Non-Aqueous Phase Liquids in the Subsurface. In: Transport and Fate of Contaminants in the Subsurface. EPA/625/4-89/019, Robert S. Kerr Environmental Research Laboratory, U.S. Environmental Protection Agency, Ada, OK.

Pritchard, P.H. 1981. Model Ecosystems. In: R.A. Conway (ed.), Environmental Risk Analysis for Chemicals. Van Nostrand Reinhold, New York, NY.

Raymond, R.L. 1974. Reclamation of Hydrocarbon Contaminated Ground Waters. U.S. Patent Office, Washington, DC. Patent No. 3,846,290. Patented November 5, 1974.

Raymond, R.L., R.A. Brown, R.D. Norris, and E.T. O'Neill. 1986. Stimulation of Biooxidation Processes in Subterranean Formations. U.S. Patent Office, Washington, DC. Patent No. 4,588,506. Patented May 13, 1986.

Raymond, R.L., V.W. Jamison, J.O. Hudson, R.E. Mitchell, and V.E. Farmer. 1978. Field Application of Subsurface Biodegradation of Gasoline in a Sand Formation. API Publication 4430, American Petroleum Institute, Washington, DC.

Scalf, M.R., J.F. McNabb, W.J. Dunlap, R.L. Cosby, and J. Fryberger. 1981. Manual of Ground Water Sampling Procedures. National Water Well Assoc., Worthington, OH.

Schafer, J.M. 1984. Determining Optimum Pumping Rates for Creation of Hydraulic Barriers to Ground Water Pollutant Migration. In: D.M. Nielsen (ed.), Proc., Fourth National Symp.

on Aquifer Restoration and Ground Water Monitoring. National Water Well Assoc., Worthington, OH.

Stolzenburg, T.R. and D.G. Nichols. 1985. Preliminary Results on Chemical Changes in Groundwater Samples Due to Sampling Devices. EPRI Report No. EA-4118, Electric Power Research Institute, Palo Alto, CA.

Suflita, J.M. 1989a. Microbial Ecology and Pollutant Biodegradation in Subsurface Ecosystems. In: Transport and Fate of Contaminants in the Subsurface. EPA/625/4-89/019, Robert S. Kerr Environmental Research Laboratory, U.S. Environmental Protection Agency, Ada, OK.

Suflita, J.M. 1988b. Microbiological Principles Influencing the Biorestoration of Aquifers. In: Transport and Fate of Contaminants in the Subsurface. EPA/625/4-89/019, Robert S. Kerr Environmental Research Laboratory, U.S. Environmental Protection Agency, Ada, OK.

Thomas, J.M., and C.H. Ward. 1989. In Situ Biorestoration of Organic Contaminants in the Subsurface. Environ. Sci. Technol. 23:760-766.

Thomas, J.M., M.D. Lee, and C.H. Ward. 1987a. Use of Ground Water in Assessment of Biodegradation Potential in the Subsurface. Environ. Toxicol. Chem. 6:607-61 4.

Thomas, J.M., H.J. Marlow, R.L. Raymond, and C.H. Ward. 1987b. Hydrologic Considerations for In Situ Biorestoration. US/USSR Symposium on Fate of Pesticides and Chemicals in the Environment, Oct. 12-16, Iowa City, IA (under review by John Wiley & Sons, Inc., New York, NY).

Thomas, J.M., M.D. Lee, P.B. Bedient, R.C. Borden, L.W. Canter, and C.H. Ward. 1987c. Leaking Underground Storage Tanks: Remediation with Emphasis on In Situ Biorestoration. EPA/600/2-87/008, Robert S. Kerr Environmental Research Laboratory, U.S. Environmental Protection Agency, Ada, OK.

U.S. Environmental Protection Agency. 1989a. Bioremediation of Hazardous Waste Sites Workshop: Speaker Slide Copies and Supporting Information. CERI-89-11, Center for Environmental Research Information, U.S. Environmental Protection Agency, Cincinnati, OH.

Wilson, J.L. 1984. Double-cell Hydraulic Containment of Pollutant Plumes. In: D. M. Nielsen (ed.), Proc., Fourth National Symp. on Aquifer Restoration and Ground Water Monitoring. National Water Well Assoc., Worthington, OH.

Wilson, J.T., and B.H. Wilson. 1985. Biotransformation of Trichloroethylene in Soil. Appl. Environ. Microbiol. 49:242-243.

Wilson, J.T. and C.H. Ward. 1987. Opportunities for Bioreclamation of Aquifers Contaminated with Petroleum Hydrocarbons. Dev. Industrial Microbiol. (J. Industrial Microbiol. Suppl. 1) 27:109-116.

Wilson J., L. Leach, J. Michalowski, S. Vandegrift, and R. Callaway. 1989. In Situ Bioremediation of Spills from Underground Storage Tanks: New Approaches for Site Characterization, Project Design, and Evaluation of Performance. EPA/600/2-89/042, Robert S. Kerr Environmental Research Laboratory, U.S. Environmental Protection Agency, Ada, OK.

Wilson, J.T., J.F. McNabb, D.L. Balkwill, and W.C. Ghiorse. 1983. Enumeration and Characterization of Bacteria Indigenous to a Shallow Water-Table Aquifer. Ground Water 21:134-142.

Wilson, J.T., L.E. Leach, M.J. Henson, and J.N. Jones. 1986. In Situ Biorestoration as a Ground Water Remediation Technique. Ground Water Monitoring Rev. 6:56-64.

Zapico, M.M., S. Vales, and J.A. Cherry. 1987. A Wireline Piston Core Barrel for Sampling Cohesionless Sand and Gravel Below the Water Table. Ground Water Monitoring Rev. 7(3):74-82.

U.S. Environmental Protection Agency
Region 5, Library (PL-12J)
77 West Jackson Boulevard, 12th Floor
Chicago, IL 60604-3590

☆U.S. GOVERNMENT PRINTING OFFICE: 1992 - 648-003/40726