EPA-542-R-05-028
March 2006

Off-Gas Treatment Technologies for Soil Vapor Extraction Systems: State of the Practice

March 2006

Prepared by:
Office of Superfund Remediation and Technology Innovation
Office Solid Waste and Emergency Response
U.S. Environmental Protection Agency

CONTENTS

Section Page

ACRONYMS AND ABBREVIATIONS ..... **vi**

NOTICE AND DISCLAIMER ..... **viii**

ACKNOWLEDGMENT ..... **ix**

EXECUTIVE SUMMARY **ES-1**

1.0 INTRODUCTION **1-1**

1.1 Purpose 1-1
1.2 Document Structure 1-2
1.3 Sources of Information 1-2
1.4 Types of Environmental Remediation Systems 1-3
1.5 Summary of Off-Gas Treatment Technologies Evaluated 1-3
1.5.1 Thermal Treatment 1-3
1.5.2 Adsorption 1-4
1.5.3 Biofiltration 1-4
1.5.4 Emerging Technologies 1-4
1.5.4.1 Non-Thermal Plasma 1-5
1.5.4.2 Photolytic and Photocatalytic Technologies 1-5
1.5.4.3 Membrane Separation 1-5
1.5.4.4 Other Technologies 1-5
1.6 Evaluation Criteria 1-6

2.0 BACKGROUND **2-1**

2.1 State of Practice for Off-Gas Treatment 2-1
2.2 History of Soil Vapor Extraction 2-1
2.3 Soil Vapor Extraction and Multi-Phase Extraction Treatment Systems 2-2
2.3.1 Treatment System Components 2-2
2.3.2 Treatment System Operations 2-4
2.4 Contaminant Sources and Off-Gas Characteristics 2-5
2.5 Regulatory Requirements 2-7

3.0 THERMAL TREATMENT TECHNOLOGIES **3-1**

3.1 Thermal Oxidation 3-1
3.1.1 Technology Description 3-2
3.1.1.1 Direct-Flame Thermal Oxidizers 3-3
3.1.1.2 Flameless Thermal Oxidizers 3-3
3.1.1.3 Catalytic Oxidizers 3-5
3.1.1.4 Hybrid Thermal/Catalytic Oxidizer Systems 3-5
3.1.1.5 Heat Recovery 3-6
3.1.2 Applicability 3-8
3.1.3 Limitations 3-10
3.1.4 Performance 3-11
3.1.5 Engineering Considerations 3-14
3.1.5.1 Design Issues 3-14
3.1.5.2 Operating Issues 3-15
3.1.6 Residuals Management 3-15
3.1.6.1 Products of Complete Combustion 3-15
3.1.6.2 Products of Incomplete Combustion 3-16

CONTENTS (Continued)

Section Page

3.1.7 Cost and Economics 3-18
3.1.7.1 Capital Cost 3-18
3.1.7.2 Operating Cost 3-19
3.1.8 Developmental Status 3-21
3.2 Internal Combustion Engines 3-21
3.2.1 Technology Description 3-22
3.2.2 Applicability 3-22
3.2.3 Limitations 3-23
3.2.4 Performance 3-23
3.2.5 Engineering Considerations 3-24
3.2.6 Residuals Management 3-24
3.2.7 Cost and Economics 3-25
3.2.8 Developmental Status 3-25

4.0 ADSORPTION TECHNOLOGIES 4-1

4.1 Activated Carbon Adsorption 4-1
4.1.1 Technology Description 4-2
4.1.2 Applicability 4-4
4.1.3 Limitations 4-4
4.1.4 Performance 4-6
4.1.5 Engineering Considerations 4-6
4.1.6 Residuals Management 4-8
4.1.7 Cost and Economics 4-8
4.1.8 Developmental Status 4-9
4.2 Zeolite Adsorption 4-9
4.2.1 Technology Description 4-9
4.2.2 Applicability 4-10
4.2.3 Limitations 4-12
4.2.4 Performance 4-12
4.2.5 Engineering Considerations 4-14
4.2.6 Residuals Management 4-15
4.2.7 Cost and Economics 4-16
4.2.8 Developmental Status 4-16
4.3 Synthetic Polymer Adsorption 4-17
4.3.1 Technology Description 4-17
4.3.2 Applicability 4-18
4.3.3 Limitations 4-19
4.3.4 Performance 4-19
4.3.5 Engineering Considerations 4-20
4.3.6 Residuals Management 4-20
4.3.7 Cost and Economics 4-20
4.3.8 Developmental Status 4-21

5.0 BIOFILTRATION TECHNOLOGIES 5-1

5.1 Technology Description 5-1
5.2 Applicability 5-4
5.3 Limitations 5-5
5.4 Performance 5-6

CONTENTS (Continued)

Section Page

5.5 Engineering Considerations 5-9
5.6 Residuals Management 5-13
5.7 Cost and Economics 5-14
5.8 Developmental Status 5-15

6.0 EMERGING TECHNOLOGIES 6-1

6.1 Non-Thermal Plasma Technologies 6-1
6.1.1 Technology Description and Applicability 6-1
6.1.1.1 Silent Discharge Plasma 6-3
6.1.2.1 Gas-Phase Corona Reactor 6-3
6.1.2 Developmental Status 6-5
6.1.3 Performance 6-6
6.1.4 Engineering Considerations, Limitations, and Cost 6-8
6.2 Photolytic and Photocatalytic Technologies 6-10
6.2.1 Technology Description and Applicability 6-10
6.2.2 Developmental Status 6-11
6.2.2.1 Photolytic Treatment 6-11
6.2.2.2 Photocatalytic Treatment 6-12
6.2.3 Performance 6-13
6.2.4 Engineering Considerations, Limitations, and Cost 6-15
6.3 Membrane Separation Technologies 6-16
6.3.1 Technology Description and Applicability 6-17
6.3.2 Developmental Status 6-18
6.3.3 Performance 6-19
6.3.4 Engineering Considerations, Limitations, and Costs 6-19
6.4 Other Technologies 6-20
6.4.1 Gas Absorption Technologies 6-20
6.4.2 Vapor Condensation Technologies 6-22

7.0 SUMMARY 7-1

8-0 REFERENCES 8-1

LIST OF TABLES

Section Page

3-1 Lower Explosive Limits for Selected Hydrocarbons 3-9

3-2 Required Oxidation Temperatures to Achieve 99% Destruction and Removal Efficiencies for Select Compounds 3-13

4-1 Estimated Capital Cost Range for Vapor-Phase Activated Carbon Treatment Units (Including Carbon) 4-9

6-1 Gas-Phase Corona Plasma Reactor Technology Results 6-7

6-2 Representative Destruction and Removal Efficiencies for Photocatalytic Treatment of Volatile Organic Compound-Contaminated Air 6-13

6-3 Destruction and Removal Efficiencies for Photolytic Treatment of Soil Vapor Extraction Contaminants from McClellan Air Force Base 6-14

7-1 Generalized Volatile Organic Compound Influent Concentration Ranges for Commercially Available Technologies 7-2

7-2 Evaluation Factors for Thermal Oxidation and Carbon Adsorption Technology Selection 7-3

LIST OF FIGURES

Section		Page
2-1	Typical Soil Vapor Extraction System	2-3
2-2	Typical Multi-Phase Extraction System	2-4
3-1	Generalized Flow Diagram of Typical Thermal Oxidation System	3-2
3-2	Flameless Thermal Oxidizer System	3-4
3-3	Hybrid Thermal/Catalytic Oxidizer System	3-6
3-4	Recuperative Thermal Oxidizer	3-7
3-5	Regenerative Thermal Oxidizer	3-8
3-6	Internal Combustion Engine Remediation System	3-22
4-1	Typical Regenerable Activated Carbon System	4-3
4-2	Zeolite Adsorption System	4-11
4-3	Comparison of Inlet Concentration Effects on Adsorption Capacity of Adsorbents	4-13
4-4	Comparison of Humidity Effects on Adsorption Capacity of Adsorbents	4-14
4-5	Polymer Adsorption System	4-18
5-1	Typical Biofiltration System	5-3
6-1	Packed Bed Corona Reactor	6-4
6-2	Typical Two-Stage Membrane Separation System	6-18

ACRONYMS AND ABBREVIATIONS

Å	Angstrom
AC	Alternating current
AFCEE	Air Force Center for Environmental Excellence
AFB	Air Force Base
AST	Aboveground storage tank
ATSDR	Agency for Toxic Substances and Disease Registry
BACT	Best available control technology
Battelle	Battelle Pacific Northwest Laboratories
BTEX	Benzene, toluene, ethylbenzene, and xylene
BTU	British thermal unit
BTU/cubic ft	British thermal unit per cubic foot
CAA	Clean Air Act
Cat-Ox	Catalytic oxidizer
CDC	Centers for Disease Control
cfm	Cubic foot per minute
CO	Carbon monoxide
DCA	Dichloroethane
DCE	Dichloroethene
DFTO	Direct flame thermal oxidizer
DNAPL	Dense nonaqueous-phase liquid
DOE	U.S. Department of Energy
DPE	Dual-phase extraction
DRE	Destruction and removal efficiency
EBCT	Empty bed contact time
fpm	Feet per minute
FRTR	Federal Remediation Technologies Roundtable
FTO	Flameless thermal oxidizer
$g/m^3/hr$	Gram per cubic meter per hour
GAC	Granular activated carbon
HAP	Hazardous air pollutant
ICAC	Institute of Clean Air Companies
ICE	Internal combustion engine
IP	Ionization potential
kV	Kilovolt
LANL	Los Alamos National Laboratory
lb/hr	Pound per hour
LEL	Lower explosive limit
LNAPL	Light nonaqueous-phase liquid
MACT	Maximum achievable control technology
MCP	Massachusetts Contingency Plan
MEC	Maximum elimination capacity
MEK	Methyl ethyl ketone
MIBK	Methyl isobutyl ketone
mm Hg	Millimeter of mercury
MPE	Multi-phase extraction
MTBE	Methyl tert-butyl ether
NAPL	Nonaqueous-phase liquid
NAS	Naval Air Station
NCER	National Center for Environmental Research

ACRONYMS AND ABBREVIATIONS (CONTINUED)

NESHAP	National Emission Standard for Hazardous Air Pollutant
NIOSH	National Institute for Occupational Safety and Health
nm	Nanometer
NO_x	Nitrogen oxides
O&M	Operation and maintenance
PCB	Polychlorinated biphenyl
PCC	Product of complete combustion
PCDD	Polychlorinated dibenzo-p-dioxin
PCDD/F	Polychlorinated dibenzo-p-dioxins and dibenzofurans
PCDF	Polychlorinated dibenzofuran
PCE	Tetrachloroethene
PIC	Product of incomplete combustion
ppm	Part per million
ppmv	Part per million by volume
RCRA	Resource Conservation and Recovery Act
RTN	Remediation Technologies Network
RTO	Regenerative thermal oxidizer
scfm	Standard cubic foot per minute
SITE	Superfund Innovative Technology Evaluation
SO_x	Sulfur oxides
SVE	Soil vapor extraction
SVOC	Semivolatile organic compound
TCA	Trichloroethane
TCE	Trichloroethene
TiO_2	Titanium dioxide
TPH	Total petroleum hydrocarbon
UEL	Upper explosive limit
USACE	U.S. Army Corps of Engineers
U.S. EPA	U.S. Environmental Protection Agency
UST	Underground storage tank
UV	Ultraviolet
VOC	Volatile organic compound

NOTICE AND DISCLAIMER

This report has been prepared for the U.S. Environmental Protection Agency (U.S. EPA) Office of Superfund Remediation and Technology Innovation (OSRTI) under Contract Number 68-W-02-034. Information in this report is derived from numerous sources, including personal communications with experts in the field. Some of the source documents have been peer-reviewed. This report has undergone U.S. EPA and external review by subject matter experts. Mention of trade names or commercial products does not constitute endorsement or recommendation for use.

If you have questions about this report, please contact Kelly Madalinski, U.S. EPA OSRTI, at (703) 603-9901 or madalinski.kelly@epa.gov.

A portable document format (pdf) version of "Off-Gas Treatment Technologies for Soil Vapor Extraction Systems: State of the Practice" may be viewed or downloaded at the Hazardous Waste Cleanup Information (CLU-IN) system Web site at http://clu-in.org/542R05028. A limited number of printed copies are available free of charge and may be ordered via the Web site, by mail, or by fax from:

U.S. EPA/National Service Center for Environmental Publications
P.O. Box 42419
Cincinnati, OH 45242-2419
Telephone: (513) 489-8190 or (800) 490-9198
Fax: (513) 489-8695

ACKNOWLEDGMENT

This document has been prepared for the U.S. Environmental Protection Agency (U.S. EPA) Office of Superfund Remediation and Technology Innovation (OSRTI) under Contract Number 68-W-02-034. Special acknowledgment is given to the remediation professionals for their review and thoughtful suggestions to support the preparation of this document, including the following federal staff: Harold Ball (U.S. EPA), Ray Cody (U.S. EPA), JoAnn Eskelsen (U.S. EPA), Michael Gill (U.S. EPA), Bernard Schorle (U.S. EPA), Michelle Simon (U.S. EPA), Cynthia Wetmore (U.S. EPA), Dave Becker (U.S. Army Corps of Engineers), and Edward Mead (U.S. Army Corps of Engineers).

EXECUTIVE SUMMARY

This document provides state-of-the-practice information on off-gas treatment technologies for soil vapor extraction (SVE) systems currently being used to clean up hazardous waste sites. It provides information on a wide variety of processes, including common practices as well as innovative emerging alternatives to illustrate the state of the practice. This information can help SVE project managers and practitioners with the following:

- Identifying available technologies for off-gas treatment and understanding their applicability
- Understanding principles of the various off-gas treatment technologies, their strengths, and their limitations
- Screening technologies based on site-specific off-gas attributes, treatment goals, and costs
- Finding detailed information about conventional technologies and new emerging alternatives

Treatment of remediation system off-gases is necessary because the volatile organic compounds (VOC) typically present in SVE off-gases are hazardous because of their toxicity (acute or long-term carcinogenicity), ignitability, or other reasons. Often, the direct discharge of off-gases without treatment is unacceptable because of health, safety, or public concerns. The goal of off-gas treatment is to improve the off-gas quality for release to the atmosphere, with minimal impact to human health or the environment.

SVE is one of the most efficient and cost-effective methods of removing VOCs from contaminated soil. In the United States, SVE is an accepted technology that has been used at landfill sites and leaking underground storage tank (UST) sites since the 1970s. In 1993, the U.S. Environmental Protection Agency (U.S. EPA) approved SVE as a presumptive remedy for treating soils contaminated with VOCs. Multi-phase extraction (MPE) is a related technology, and the types of off-gas treatment technologies used for MPE are often very similar to those used for SVE. The nature of the off-gas streams produced by SVE and MPE systems affects the selection of the vapor treatment technology and engineering requirements for the treatment system.

Depending on the site and specific remediation goals, a typical SVE or MPE system operates for six months to several years. Sites with the most stringent soil clean-up criteria or with very large contaminant masses may require the use of SVE systems for much longer. Off-gas streams generated from these remediation systems are generally low- to medium-flows containing dilute concentrations of VOCs. The vapor flow rates encountered by most SVE systems generally range from 100 to 1,500 standard cubic feet per minute (scfm).

The nature of SVE and MPE off-gas depends on the nature and distribution of VOCs in the subsurface. Site attributes and physical properties of the chemical constituents in the off-gas directly influence the selection of the off-gas treatment technology and overall remediation strategy. Some

important site attributes include the presence of nonaqueous-phase liquid (NAPL) sources of contamination and the capacity of the soil to release vapors (soil permeability). Physical properties of the chemical compounds that influence the treatment technology include molecular weight and Henry's law constants.

Treatment technologies for off-gas treatment are categorized into the following four groups in this report:

1. Thermal – An oxidation process in which the temperature is increased to destroy vapor-phase contaminants; for this report, internal combustion engine (ICE) is included as a thermal technology
2. Adsorption – A process separating contaminants using a medium or matrix
3. Biological – Use of living organisms that consume or metabolize chemicals in the off-gas
4. Emerging technologies – Including photocatalytic and non-thermal plasma treatment, which destroy contaminants using ultraviolet (UV) light and electrical energy, respectively

This document presents the state of the practice for these technologies based on applicability, limitations, performance, engineering considerations, residuals management, cost and economics, and developmental status. This information is intended to assist project managers and engineers in evaluating and selecting appropriate off-gas treatment technologies for SVE systems. The information is also applicable to vapors generated from groundwater treatment systems. Project managers and engineers seeking guidance for design and operation of such systems should consult engineering manuals and other specific guidance documents referred to throughout this document.

Thermal treatment technologies include thermal oxidation and ICEs. Thermal oxidation systems (including direct-flame, flameless, and catalytic oxidizers) can treat a broad range of SVE off-gas streams and are often chosen for their reliability in achieving high VOC destruction and removal efficiencies (DRE). These systems can be designed to oxidize 95 percent to more than 99 percent of the influent VOCs. Target contaminant groups in SVE off-gas suitable for thermal oxidation treatment include non-halogenated VOCs, semivolatile organic compounds (SVOC), and fuel hydrocarbons at a wide range of concentrations. Specific classes of compounds readily destroyed in thermal oxidizers include alcohols, aliphatics, aromatics, esters, and ketones. If halogenated compounds are present in the SVE off-gas (chlorinated VOCs such as trichloroethene [TCE]), acid gases may be generated and require further treatment. Limitations of thermal oxidation for treating SVE off-gas include its comparatively high capital expense and the potentially high cost of energy to heat the incoming SVE off-gas. ICEs can treat high VOC concentrations and achieve relatively high DREs.

Adsorption systems are most effective (in terms of both cost and waste management) for remediation projects involving moderate flow rates and dilute contaminant concentrations (less than 100 parts per million by volume [ppmv]). Well-designed adsorption systems may achieve 95 to 98

percent DREs at input concentrations of 500 to 2,000 ppmv. At lower concentrations, removal is generally greater than 98 percent. The main limitation of this technology is the high operating cost associated with adsorbent replacement or regeneration when high influent concentrations are treated.

Granular activated carbon (GAC) is the most common adsorbent used to treat SVE off-gas. Although GAC systems can be used to treat a wide range of VOCs, they are not effective for treating VOCs with high polarity (such as alcohols and organic acids) or high vapor pressures (highly volatile compounds such as vinyl chloride, methyl tert-butyl ether [MTBE], and methylene chloride). System flow rates can range from 100 to 60,000 scfm. The relatively low initial capital cost of carbon adsorption systems makes them particularly attractive for short-term SVE applications when dilute concentrations of VOCs are present. High humidity diminishes the adsorptive ability of GAC. Zeolites and polymers are two other types of adsorbents. Their adsorptive capacities are not as affected by high humidity levels, but their costs are significantly higher than GAC costs. Highly polar and volatile VOC degradation products, such as vinyl chloride, formaldehyde, sulfur compounds, and alcohols, are better adsorbed by hydrophilic zeolites than by GAC. Polymeric adsorption is applicable to a wide range of VOCs and chlorinated VOCs at a wide range of vapor flow rates.

Biofiltration can be used to treat relatively dilute VOC concentrations (typically less than 1,500 total ppmv). If optimum conditions are maintained, a properly designed biofilter may achieve greater than 90 percent and sometimes greater than 95 percent DREs. System flow rates typically range from 20 to 500 scfm. Specific classes of compounds readily biodegradable by biofilters include mono-aromatic hydrocarbons, alcohols, aldehydes, and ketones. Biofiltration is most effective in treating vapor streams from SVE systems remediating leaking USTs at gas stations. At these sites, destruction of aliphatic petroleum hydrocarbons and aromatic compounds (such as benzene, toluene, ethylbenzene, and xylene [BTEX] compounds) is required. One limitation is that the technology is sensitive to variations in operating parameters, such as moisture content, temperature, pH, and nutrient levels. A limited number of biofiltration systems are currently being used for SVE applications.

Emerging technologies for SVE off-gas treatment include non-thermal plasma, photolytic and photocatalytic, membrane separation, gas absorption, and vapor condensation technologies. These technologies have not been used widely for SVE off-gas treatment. Also, several of the technologies are mostly in the research and development stage. Non-thermal plasma treatment can achieve high DREs for a wide range of chemicals, including aromatic VOCs (such as BTEX) and chlorinated VOCs. This treatment can address a wide range of concentrations but only at lower flow rates than thermal and adsorption technologies. Photolytic and photocatalytic technologies are effective for treating a broad range of halogenated and non-halogenated VOCs, aromatic and aliphatic hydrocarbons, alcohols, ethers, ketones, and aldehydes. These technologies work best on concentrated VOC waste streams (1 to 3,000 ppmv) at low flow rates. Membrane separation is best suited for chlorinated and non-chlorinated VOC concentrations exceeding 1,000 ppmv (up to 10,000 ppmv). The capacity of current systems generally ranges from 1 to 100 scfm.

Thermal oxidation and carbon adsorption are the two most common technologies used for SVE off-gas treatment. These two technologies are robust, demonstrated, and mature vapor treatment methods that can address a wide variety of contaminants and concentrations. At present, the selection of off-gas treatment technologies for SVE is based on cost and operational considerations that differentiate thermal oxidation and carbon adsorption systems. Although many factors affect the cost of off-gas treatment, the general rule for selecting thermal oxidation or carbon adsorption is that dilute off-gases are more cost-effectively treated by carbon adsorption. Thermal oxidation becomes more cost-effective for off-gases that contain greater concentrations of vapor contaminants. Some sites have both thermal oxidation and GAC systems. Thermal oxidation systems have been used to treat higher initial concentrations and are replaced by GAC systems once concentrations have decreased. The following table summarizes evaluation factors for selecting thermal oxidation and carbon adsorption technologies.

Although thermal oxidation and carbon adsorption are currently the most common treatment technologies for SVE off-gas, some emerging technologies presented in this document have the potential to be cost-effective alternatives to thermal oxidation and carbon adsorption. In the future, cost-efficiency improvements or reports of new, positive experiences in applying these alternatives may result in their selection more frequently.

Evaluation Factors for Thermal Oxidation and Carbon Adsorption Technology Selection

Factor	Thermal Oxidation	Carbon Adsorption
Concentration	More commonly used for higher contaminant concentrations (> 500 ppmv); treatment costs per pound of contaminant decrease as VOC concentrations increase because less supplemental energy is required per pound removed	More frequently used for dilute vapor concentrations (< 1,000 ppmv); treatment costs per pound of contaminant tend to stay same or increase as concentration of vapors increase because carbon replacement frequency increases
O&M requirements	Tends to require more labor and more skilled labor to operate because of safety considerations	Tends to be simpler and less labor-intensive to operate and maintain unless vapor-phase concentrations are high and "breakthrough" occurs frequently
Safety	More safeguards necessary if it is possible for off-gases to reach high concentrations (significant fractions of the lower explosive limits of the contaminants in the vapor); formation of dioxins and furans is possible if not properly operated	Tends to be very safe under most conditions; however, high levels of ketones or similar compounds may pose a fire hazard
Chlorinated vs. non-chlorinated VOCs	Less commonly used for chlorinated VOCs because of formation of hydrochloric acid during vapor combustion, which requires special acid-resistant materials for piping and equipment after combustion chamber	Equally applicable to chlorinated and non-chlorinated VOCs; acid formation not typically an issue
Variety of compounds that can be treated	Except for acid formation during combustion of chlorinated VOCs, wide variety of compounds can be treated	Not all compounds adsorb well to activated carbon (depends on sorptive capacity); some common compounds (such as vinyl chloride) not readily treated; therefore, each compound in off-gas must be considered
Capital vs. O&M costs	Equipment significantly more expensive to purchase than carbon units; however, at high VOC concentrations, O&M costs lower than carbon units	Capital costs fairly low; O&M costs proportional to off-gas flow rates and vapor concentrations

Notes:

O&M = Operation and maintenance
ppmv = Part per million by volume
VOC = Volatile organic compound

1.0 INTRODUCTION

This document discusses the state of the practice of off-gas treatment technologies for remediation systems currently being used to clean up hazardous waste sites, with a focus on soil vapor extraction (SVE) systems. The following sections discuss the purpose of this document, summarize the document structure, present sources of information, discuss types of environmental remediation systems, present a summary of the off-gas treatment technologies evaluated, and discuss the evaluation criteria.

1.1 Purpose

This document provides information on a wide variety of technologies available for the treatment of chemical contaminants in the off-gas emissions of site remediation systems currently used in the environmental remediation industry. The off-gas treatment technologies evaluated include common practices as well as innovative emerging alternatives to represent the state of the practice. The technologies are analyzed based on a number of criteria, such as applicability, limitations, performance, and engineering considerations (see Section 1.6). This information is intended to assist project managers and engineers in the evaluation and selection of appropriate off-gas treatment technologies for SVE systems. The information is also applicable to vapors generated from multi-phase extraction (MPE) and groundwater treatment systems. It is recommended that project managers and engineers seeking guidance on the design and operation of such off-gas treatment systems consult engineering manuals or other specific guidance documents for specific technologies of interest. Reference materials on the design and use of SVE systems are listed below.

- U.S. Army Corps of Engineers' (USACE) "Soil Vapor Extraction and Bioventing Engineer Manual" - http://www.usace.army.mil/inet/information/usace-docs/eng-manuals (USACE 2002)
- USACE's "Multi-Phase Extraction Engineer Manual" - http://www.usace.army.mil/inet/information/usace-docs/eng-manuals (USACE 1999)
- U.S. Environmental Protection Agency's (U.S. EPA) "Presumptive Remedies: Site Characterization and Technology Selection for CERCLA Sites with Volatile Organic Compounds in Soils" - http://www.epa.gov/superfund/resources/presump/finalpdf/scts.pdf (U.S. EPA 1993b)
- U.S. EPA's "Air Pollution Control Cost Manual" - http://www.epa.gov/ttn/catc/dir1/c_allchs.pdf (U.S. EPA 2002)
- U.S. EPA's "Development of Recommendations and Methods to Support Assessment of Soil Venting Performance and Closure" - http://www.epa.gov/ada/download/reports/epa_600_r01_070.pdf (U.S. EPA 2001b)

1.2 Document Structure

This document has eight sections, including this introduction (Section 1.0). This introduction presents the purpose of this document, the document structure, sources of information, types of environmental remediation systems, summary of off-gas treatment technologies evaluated, and evaluation criteria.

Section 2.0 presents background information that provides a basis for applying technology screening to specific sites and treatment system applications. This section also includes a brief discussion on the history of SVE treatment and the estimated number of systems in operation. It discusses typical sources of contamination and chemicals treated by SVE and related environmental remediation systems, how these chemicals generally behave in the environment, and the site characteristics that make sites amenable to SVE and related treatments. Treatment system components, monitoring parameters, and their general operation are also discussed to provide a clear understanding of how off-gas treatment systems physically interact with remediation systems. Regulatory requirements applicable to SVE systems are also discussed.

Sections 3.0 through 6.0 provide evaluations of the various off-gas treatment technologies based on the defined evaluation criteria (see Section 1.6). Each section pertains to a particular technology group. Specifically, Section 3.0 evaluates thermal treatment technologies (including direct-flame thermal oxidation, flameless thermal oxidation, catalytic oxidation, hybrid thermal/catalytic oxidation, and heat recovery) and internal combustion engines (ICE). Section 4.0 discusses adsorption technologies and three major sorbents: activated carbon, zeolites, and synthetic polymers. Section 5.0 evaluates biofiltration. Section 6.0 focuses on emerging technologies, including non-thermal plasma, photolytic and photocatalytic processes, membrane separation, and other technologies.

Section 7.0 summarizes the information provided in this document. References used to prepare this document and cited in text are listed in Section 8.0.

1.3 Sources of Information

The information presented in this document comes from a number of sources (see Section 8.0). In general, every attempt has been made to use peer-reviewed information and technical literature from authoritative sources, including technical papers, textbooks, research articles, technology reviews, U.S. EPA and other agency documents, and commercial database searches. In certain circumstances, Web sites were consulted for recent data, and where applicable, they are cited. For emerging and innovative technologies, vendor information was obtained from papers, Web sites, and personal communications.

1.4 Types of Environmental Remediation Systems

SVE systems generate off-gases by removing soil vapors directly from the subsurface or by transferring the contaminants to a vapor phase from an adsorbed phase on soil particles or from dissolved-phase (aqueous) or free-product liquids. These soil vapors often contain volatile organic compounds (VOC) that cannot be discharged to the atmosphere without treatment. A similar environmental remediation system that also generates vapors that require treatment is MPE, sometimes referred to as dual-phase extraction (DPE). Other systems that can create a vapor-phase off-gas requiring treatment are air strippers from groundwater pump-and-treat processes, ex-situ soil pile treatments, and bioventing systems. There are some exceptions to the need for treating off-gas (such as when the site-specific nature of the subsurface or operational flow of a system yields concentrations of off-gas chemicals that do not result in health effects or nuisance odors). Even in these cases, however, local ordinances may preclude direct venting of off-gases to the atmosphere.

Treatment of remediation system off-gases is important. In many instances, the VOCs in the off-gases are chemicals that are hazardous because of toxicity (acute or long-term carcinogenicity), ignitability, or other reasons. The goal of off-gas treatment is to improve the quality of off-gas for release to the atmosphere, with minimal impact to human health and the environment.

1.5 Summary of Off-Gas Treatment Technologies Evaluated

Currently available commercial technologies for off-gas treatment can be categorized into three main groups: thermal treatment, adsorption, and biofiltration. Thermal treatment is an oxidation process in which the temperature is increased to destroy contaminants in the vapor phase. Adsorption technologies involve the separation of contaminants by medium or matrix. Biofiltration treatment technologies take advantage of living organisms that consume or metabolize off-gas chemicals prior to off-gas discharge. Other emerging technologies include photolytic treatment and non-thermal plasma treatment, which destroy contaminants using ultraviolet (UV) light or electrical energy. Although these technologies are used for industrial applications, they are considered emerging because of limited SVE applications to date.

1.5.1 Thermal Treatment

Thermal treatment of contaminants is a frequently used technology combusting or oxidizing VOCs to byproducts such as carbon dioxide and water. Section 3.0 discusses this technology in detail. Specific applications include direct-flame thermal oxidation, flameless thermal oxidation, catalytic oxidation, hybrid thermal/catalytic oxidation, heat recovery and ICEs. Thermal (non-catalytic) processes typically operate at temperatures exceeding 1,400 °F, with a typical minimum residence time over 0.5 seconds. Regenerative and recuperative system designs can be used to minimize operating costs by recovering a portion of the energy generated in the combustion process to preheat influent gases. Catalytic oxidation, the most commonly used thermal treatment off-gas technology,

uses a catalyst and heat to oxidize contaminants in the vapor stream (U.S. EPA 2004). The low VOC concentrations typically seen in SVE applications often require additional fuel or heat input to sustain oxidation. Halogenated contaminants, however, also form halogen acids, which cannot be discharged directly into the atmosphere. The acids also tend to "poison" the catalyst. Traditionally, the gas stream must be passed through a scrubber to remove the acid. In addition, thermal treatment of chlorinated organic compounds has the potential to form various products of incomplete combustion (for example, carbon monoxide).

1.5.2 Adsorption

The simplest process for off-gas treatment discussed in this document is adsorption of contaminants. Section 4.0 discusses this technology in detail. Adsorption refers to the attraction and retention of organic contaminants to the surface of an adsorbent material. The key feature of the adsorbent material is that it is extremely porous and provides a large surface area for adsorption to take place. Although this technology concentrates contaminants and can be used to treat reasonably large volumes of off-gas, ultimately the adsorbent must either be disposed of as a hazardous waste or regenerated, thus releasing the contaminants for further treatment. Activated carbon is the most widely used adsorbent material. Other adsorbent materials include alumino-silicate crystal structures known as "zeolites" and synthetic polymers. Selection of an appropriate adsorbent material is primarily a function of the contaminant to be adsorbed, although the adsorption capacity of certain materials may be adversely affected by the relative humidity of the off-gas stream.

1.5.3 Biofiltration

Biofiltration processes are used to biologically degrade VOCs present in remediation off-gas streams. Section 5.0 discusses this technology in detail. Off-gas streams are passed through a bed or vessel of biologically active filter material. The organic VOCs in the vapor stream are adsorbed onto the filter media and subsequently degraded to inert compounds, usually carbon dioxide and water, by the microorganisms. Various biofiltration media (organic or synthetic) can be used for these systems.

1.5.4 Emerging Technologies

A number of new or emerging technologies are either not commercially available or do not have substantial performance information available for SVE applications. Nonetheless, depending on the site circumstances, these technologies may warrant consideration for an SVE practitioner. These technologies are briefly summarized below and discussed in detail in Section 6.0.

1.5.4.1 Non-Thermal Plasma

Non-thermal plasma technologies are relatively new technologies and involve the destruction of vapor-phase compounds by ionizing the compounds in the gas stream, thereby creating a plasma. This process typically occurs at temperature ranging from 90 to 250 °F (hence the term "non-thermal"). By adjusting conditions under which plasma formation occurs, the free radicals formed recombine into (generally) non-toxic simple compounds that can be released to the atmosphere. Specific plasma technologies include silent discharge plasma, gas-phase corona reactor, tunable hybrid plasma, and low-pressure surface wave plasma. The techniques differ principally in the (1) methods of applying electric fields to impart energy to the air stream and destroy the VOCs, and (2) amount of energy required. Each technique uses a power source and a flow-through reactor vessel.

1.5.4.2 Photolytic and Photocatalytic Technologies

Photolytic technologies use UV light to ionize the VOC-laden vapor stream. The UV light furnishes energy to excite and break the molecular bond of the VOCs creating free radicals. Photocatalytic technologies are similar to photolytic technologies; however, UV light is used in the presence of a catalyst (usually titanium dioxide [TiO_2]). The reaction resulting from the contact between the UV light and the catalyst produces hydroxyl radicals that destroy the VOC. The use of the catalyst allows VOC destruction to occur at, or near, room temperature.

1.5.4.3 Membrane Separation

Membrane separation technologies remove VOC vapors from the air/vapor mixture by passing the waste stream through a membrane designed to be more permeable to organic molecules than to air. These membrane separation systems can be configured as single-stage systems (typically used to treat concentrated industrial process streams) or as two-stage systems (commonly used to treat more dilute streams generated from site remediation).

1.5.4.4 Other Technologies

Other emerging technologies discussed in this document include gas absorption and vapor condensation technologies, which are summarized below.

Gas Absorption

Gas absorption technologies involve processes in which contaminant vapors are dissolved into a liquid solution. This process is referred to as "scrubbing." In some cases, the contaminant in the vapor stream chemically reacts with a component of the absorbent solution (for example, acid gases are absorbed into a caustic solution). The main difference between absorption and adsorption is that

absorption incorporates the contaminant into the absorbent medium, while adsorption takes place on the medium.

Vapor Condensation

During treatment of contaminated vapor streams, cooling or condensation of the vapor-phase contaminants can be used as a stand-alone control system or as an enhancement to other vapor control technologies. In a condensation system, the contaminant-laden vapor stream is cooled below the dew point of the contaminants. The vapor-phase contaminants are then condensed and can be collected for recycling or disposal in the liquid phase.

1.6 Evaluation Criteria

Each technology-specific section of this document provides a description of the technology and a generalized graphical representation of a typical system. Criteria are then presented to support an evaluation of the off-gas treatment technologies.

Applicability: This criterion evaluates the types of contaminants treated by each technology and the system's ability to effectively treat a variety of contaminant types as well as mixed waste streams within a wide range of contaminant concentrations and flow rates. This criterion also addresses the use of the technology for industrial applications and environmental remediation systems, as well as the use of a particular technology in a treatment train with other technologies.

Limitations: This criterion addresses whether the technology is easily used with SVE or other remediation systems and regulatory awareness and acceptance of the technology. This criterion also evaluates technology reliability and operation and maintenance (O&M) requirements for the technology to achieve its design performance standard (that is, considerations such as ease of maintenance and downtime). This criterion also considers technical limitations such as moisture content, flow rate, and residence time.

Performance: This criterion allows evaluation of technology performance, including proven destruction and removal efficiency (DRE) values for each technology based on available literature and vendor data. This criterion considers performance monitoring procedures and equipment, and the ability of each technology to handle mass loading. Issues related to start-up and maintenance of steady-state conditions are also discussed.

Engineering Considerations: This criterion considers various required engineering design parameters and their impact on the optimization of a specific technology. Problems typical in the operation of a system and means to circumvent these problems are discussed under this criterion.

Residuals Management: This criterion evaluates whether the technology generates treatment residuals (including solid, liquid, and vapor waste streams) that require additional treatment or disposal. Residual management environmental concerns include the potential of a technology to generate products of incomplete combustion (PIC) and toxic breakdown products, including dioxins and furans.

Cost and Economics: This criterion evaluates technology costs, relative capital investment costs, and O&M costs associated with each technology. When cost information is limited, factors that significantly affect the cost of each technology are considered, and case-specific examples are presented as benchmark applications representing particular conditions.

Developmental Status: This criterion addresses the commercial availability of the technology. Also considered are the status of the technology (indicated by regulatory approval or conference proceedings), availability of equipment, ongoing research projects, and pilot-scale and full-scale systems in place. Vendors for the technologies are also presented under this criterion.

2.0 BACKGROUND

Off-gas treatment systems are used to prevent or minimize the discharge of vapor-phase chemicals associated with SVE or other environmental remediation systems. Untreated vapor-phase chemicals may pose risks or be a nuisance to surrounding human or environmental receptors. To support evaluation of off-gas treatment technologies and provide a frame of reference for understanding the nature of the off-gases, this section discusses the state of the practice of off-gas treatment, the history of SVE, SVE and MPE treatment systems, sources of contaminants typically present in off-gases treated using SVE and associated off-gas characteristics, and regulatory requirements.

2.1 State of Practice for Off-Gas Treatment

This document provides information regarding off-gas treatment technologies ranging from conventional to innovative methods. The state of the practice is quite varied. For example, of the 170 Superfund remedial action sites having SVE systems with reported information from 1982 to 2002, 24 systems do not include off-gas treatment of discharges. When off-gas treatment is used, the primary treatment documented is adsorption with activated carbon. For Superfund sites with data available, 70 percent of off-gas control systems for ongoing remediation projects use carbon adsorption. The second most popular method is thermal oxidation at 25 percent (U.S. EPA 2004). Alternatives to thermal oxidation and carbon adsorption are being developed; however, experience with these emerging technologies for off-gas treatment is currently limited within the Superfund program.

2.2 History of Soil Vapor Extraction

SVE is one of the most efficient and cost-effective methods of removing VOCs from contaminated soils (USACE 2002). In the United States, SVE is an accepted technology that has been used at landfill sites and at leaking underground storage tank (UST) sites since the 1970s. As early as 1972, Duane Knopik began using SVE to clean up gasoline that had leaked from a UST at his service station in Forest Lake, Minnesota. By 1982, Knopik had used his by-then patented system at approximately 100 sites throughout the United States. Other early developers of SVE systems in the late 1970s and early 1980s included Oil Recovery Systems, Inc.; Exxon Company USA; Shell Oil Company; Upjohn Company; and the American Petroleum Institute (Thornton and Wootan 1982). More recently, the practice of SVE has been applied to remediate non-petroleum related hazardous waste sites. In 1993, U.S. EPA designated SVE as a presumptive remedy for Superfund sites contaminated with VOCs (U.S. EPA 1993b).

MPE is, in many ways, a very similar technology to SVE and has similar off-gas control requirements. MPE uses a combination of SVE and liquid (both water and nonaqueous-phase liquid [NAPL]) extraction at the same well. MPE was used as a remediation technology as early as the mid-1980s (Blake and Gates 1986). In 1997, U.S. EPA identified MPE as a presumptive remedy for VOCs in soil

and groundwater (U.S. EPA 1997a). MPE is often considered an enhanced application of SVE (U.S. EPA 1997c).

The status of these technologies as presumptive remedies, their cost-effectiveness, and the ease with which they are employed have resulted in their frequent application at contaminated sites. As of 2004, approximately 222 Superfund sites had SVE and MPE identified as remedial technologies (approximately 15 percent of all sites) (U.S. EPA 2004). SVE is also widely used in Europe and is considered standard protocol in Germany (Hiller 1991).

Many of the treatment technologies described in this document also have been applied to industrial processes that emit off-gases. Because of the pollution control needs of industries, commercialization of treatment technologies often begins with industrial uses and then becomes applied for site remediation. Some of the performance data from industrial systems are directly applicable to remediation systems. For these reasons, where applicable and necessary, information from industrial off-gas treatment systems is included in this document.

2.3 Soil Vapor Extraction and Multi-Phase Extraction Treatment Systems

The following sections discuss SVE and MPE treatment system components and operations.

2.3.1 Treatment System Components

An SVE system consists of one or more extraction wells screened in the unsaturated zone connected to a regenerative blower or vacuum pump to withdraw the soil vapor. Sometimes, SVE systems include air-injection or passive-pressure venting wells to allow inflow of air to the subsurface. A low-permeability cap at the ground surface may also be incorporated into the design to prevent the flow of atmospheric air into the SVE wells. An air-water separator (moisture knock-out pot) is typically installed upstream of the blower or pump to remove excess liquid water in the soil vapor to avoid damage to equipment. SVE induces air flow in the unsaturated zone by creating a pressure gradient through the withdrawal of air from the wells. The unsaturated zone air flow results in desorption of contaminants from the surface of soil particles, volatilization of contaminants dissolved in groundwater, and evaporation of NAPLs. Figure 2-1 shows a typical SVE system.

Figure 2-1. Typical Soil Vapor Extraction System

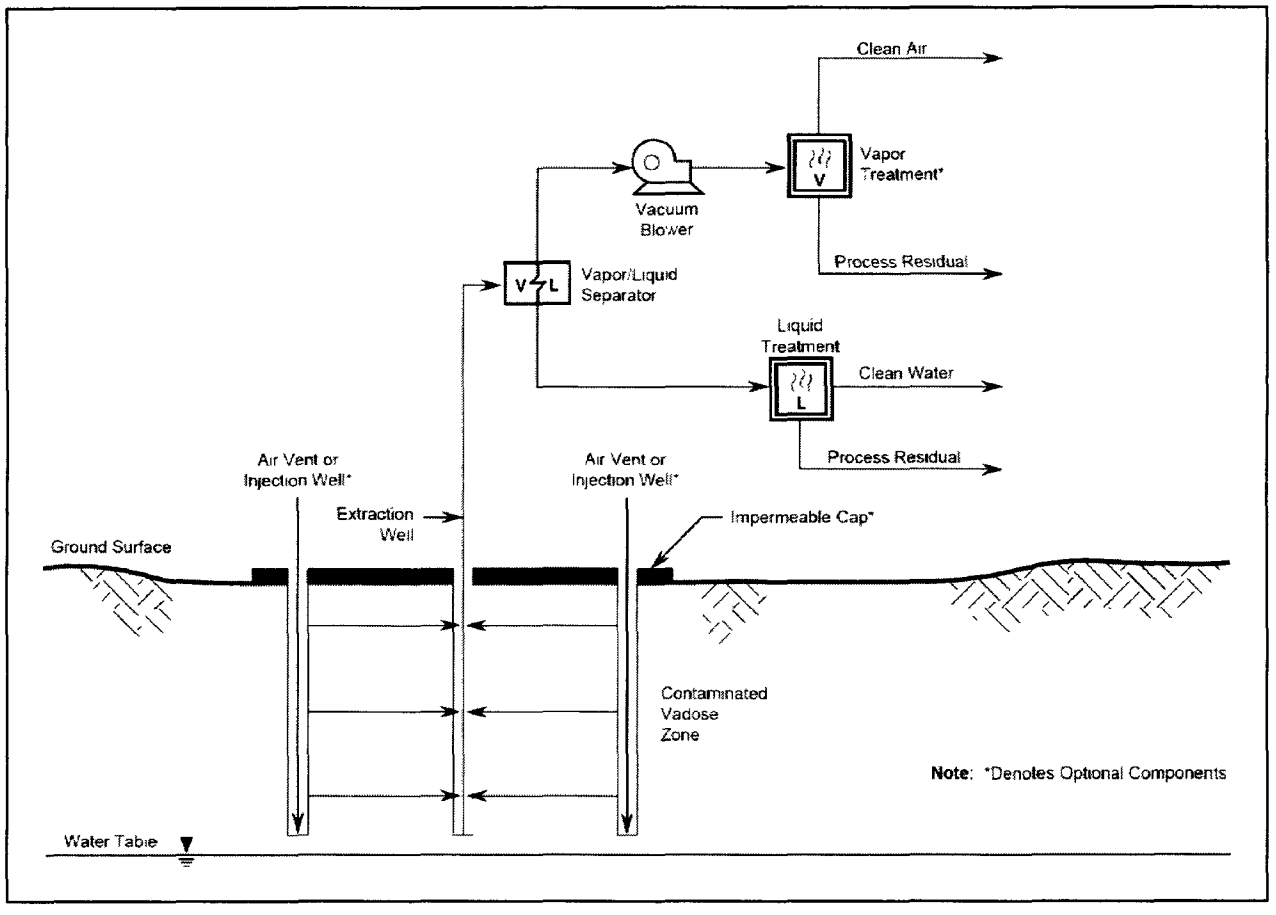

Source: U.S. EPA 1991c

MPE applications use the pressure gradient in a more aggressive manner. MPE systems incorporate a modification of the conventional SVE technology. MPE systems simultaneously extract both groundwater and soil vapor. A vacuum is placed on the extraction well, which facilitates inflow of groundwater and NAPLs to the well. This technique may make extraction of liquids in low-permeability soils feasible when liquid flow rates would normally be very slow. MPE systems often employ high vacuum (greater than 12 inches of mercury) pumps. A suction pipe can be lowered into the extraction well to extract soil vapor and groundwater, or a submersible pump can be used to draw the water table down while the vacuum removes soil vapor. Figure 2-2 shows a typical MPE system.

Figure 2-2. Typical Multi-Phase Extraction System

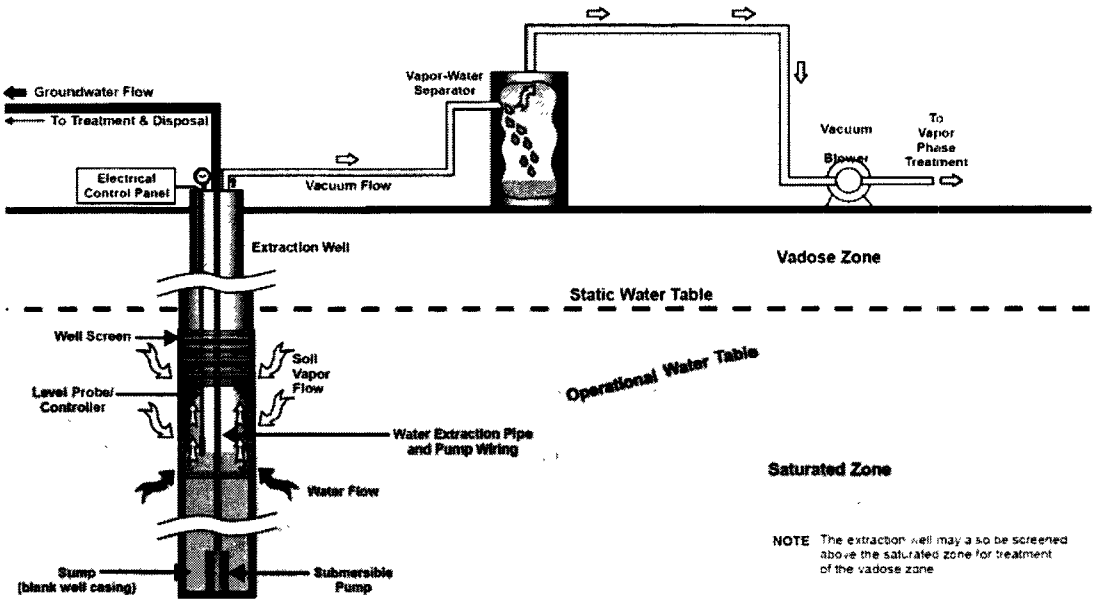

Source: U.S. EPA 1997a

The final component in both SVE and MPE systems is generally the off-gas treatment system. Off-gas treatment is necessary for almost all systems. Although off-gas treatment does not directly affect the rate of site remediation, technical issues and costs related to the off-gas treatment process are often major factors when considering whether to apply SVE or MPE at a site. The off-gas treatment portion of the SVE system can be either a minor or a significant portion of the remediation capital costs; however, off-gas treatment is typically the most expensive portion of the system O&M costs.

2.3.2 Treatment System Operations

A typical SVE or MPE system can operate at a site for approximately six months to several years, depending on the site, the system, and the remediation goals. Sites with the most stringent soil cleanup criteria or with very large contaminant masses, however, may employ SVE systems for much longer. Off-gas streams generated from site remediation systems are generally low- to medium-flow streams containing dilute concentrations of VOCs. The vapor flow rates for most SVE systems generally range from 100 to 1,500 standard cubic feet per minute (scfm). In comparison, industrial vapor treatment applications, which can have many attributes similar to SVE off-gas treatment applications, usually treat much greater volumes of air, can have flow rates of 100,000 scfm or more, and address average concentrations of vapor contaminants much higher than those generated by remedial treatment processes (Rafson 1998).

Separation and recovery of chemicals present in the vapor streams of industrial processes may result in economic benefit to the manufacturing operation by recycling recovered solvents or other materials back into the manufacturing process. Contaminants recovered from site remediation activities rarely can be reused or recycled for any significant economic benefit. SVE off-gas streams typically contain a mixture of VOCs, do not have consistent influent VOC concentrations over time, and have high water-vapor content. Based on these factors, distinctly different strategies may be used to treat off-gases from site remediation versus industrial process systems.

2.4 Contaminant Sources and Off-Gas Characteristics

Numerous potential sources of contamination of soil and groundwater may require treatment by SVE or MPE systems, including spills or leaks from USTs and aboveground storage tanks (AST). Other major sources of contaminants treatable by these systems include the following industrial operations: semiconductor, plastics, and adhesives manufacturing; metal fabrication shops; chemical blending processes; and dry cleaning. Private and military landfills created from uncontrolled waste disposal are also candidate sites for SVE treatment and methane collection through vapor extraction.

In general, chemicals that can be treated by SVE and MPE systems include halogenated and non-halogenated VOCs, some semivolatile organic compounds (SVOC), and certain other polar and non-polar organic compounds. Examples of these compounds include common chemical mixtures such as gasoline, kerosene, jet fuels, and "lighter" fuel oils (such as No. 2 heating oil). Specific chemicals that are treated using SVE include benzene, toluene, ethylbenzene, and xylene (BTEX), major components of most fuels. Other VOCs include styrene, chlorobenzene, chloroform, carbon tetrachloride, tetrachloroethene (PCE), trichloroethene (TCE), dichloroethene (DCE), vinyl chloride, trichloroethane (TCA), dichloroethane (DCA), ethylene dibromide, methylene chloride, acetone, methyl ethyl ketone (MEK), and methyl isobutyl ketone (MIBK).

VOCs can be released into the subsurface environment dissolved in water if (for example) the release is from a wastewater stream. More typically, VOCs are released into the subsurface environment as NAPLs. As the NAPL travels through the soil, residual "droplets" of NAPL are left in the pores of soil and, if released in sufficient quantity, may form subsurface "pools." The NAPL will adsorb to soil, dissolve into groundwater, or volatilize into soil gas, depending on the individual physical and chemical properties of the NAPL and its interaction with the subsurface environment. The extent to which the NAPL becomes distributed into these various subsurface environmental "compartments" governs the subsequent behavior of the contaminants and the nature of the remediation system for off-gas treatment.

Organic liquids that are less dense than water are called light nonaqueous-phase liquids (LNAPL), and liquids more dense than water are called dense nonaqueous-phase liquids (DNAPL). This density determines how the NAPL is distributed in the subsurface environment as the NAPL achieves equilibrium after release. Most chlorinated VOCs (such as TCE) are DNAPLs, and most non-chlorinated VOCs (such as benzene and fuel oil) are LNAPLs. At significant quantities, DNAPLs tend

to sink through both unsaturated and saturated permeable soils until they reach the lowest point on the top of a confining layer. LNAPLs sink through unsaturated permeable soils and will float on the water table, migrating to the lowest water table elevation. Capillary forces can trap NAPLs in porous media above or below the water table as the groundwater elevation changes over time.

The distribution of a contaminant after a release is also determined by complex interaction of the chemical properties of the contaminant (such as solubility and volatility), the properties of the soil (such as heterogeneity and permeability), and the quantity and duration of the release. Both chlorinated and non-chlorinated VOCs have relatively high vapor pressures, which is the characteristic that governs the extent to which they can be removed from soil as vapor. The vapor-phase concentrations of VOCs extracted and the change in these concentrations over time varies significantly between sites, depending on initial subsurface distribution and many chemical and soil properties. Despite a wide variety of patterns of contaminant distribution, SVE and MPE systems commonly remove VOCs as vapors that typically require additional treatment.

The nature of the off-gas streams from remediation systems is governed by distribution of the VOCs in the subsurface. Some important site characteristics that significantly affect the off-gas streams and subsequent selection of off-gas treatment technologies are listed below. These attributes may also influence the overall remediation strategy for a site.

- Sites with a relatively small VOC mass in the vadose zone tend to have lower off-gas VOC concentrations that decline rapidly.
- Sites with substantial quantities of residual NAPL in unsaturated soil will tend to have high VOC off-gas concentrations for sustained periods of time. The concentration will only significantly decline once the NAPL is removed. Substantial quantities of NAPL are more common at petroleum release sites with LNAPL than at sites with chlorinated VOCs (for example, DNAPL) contamination.
- Off-gas concentrations at sites where contamination is present in high-permeability, coarse-grained soils (such as sand and gravels) will tend to decrease more rapidly than at sites with less permeable soils because VOCs are more readily removed from permeable soils; therefore, in high-permeability soil, the nature of the off-gas will tend to change more rapidly.
- The off-gas composition at a site where the release was a mixture (such as jet fuel) will change over time as the more volatile compounds are more quickly "stripped" from the subsurface; therefore, compounds that are the basis of selection of an off-gas treatment technology may change during the progress of the remediation.
- MPE is often applied to sites that contain accessible pools of NAPL, either floating LNAPL or DNAPL trapped above a confining layer (either above or below the water table). The high vacuums applied to achieve MPE generally enhance the volatilization of VOCs entering the extraction wells as liquid; therefore, off-gas streams from MPE systems tend to have high VOC concentrations that remain high until the NAPL has been remediated.

Physical and chemical properties of the chemical constituents in the SVE off-gas also influence the selection of treatment technologies. Several general characteristics of SVE off-gas are summarized below. Specific off-gas properties relevant to each technology are discussed in Sections 3.0 through 6.0.

- The relative humidity of off-gas is typically very close to 100 percent. Some technologies (such as carbon adsorption) are less effective with high relative humidity, but others (such as biofiltration) are effective at high relative humidity.
- Henry's law determines the extent of volatilization of a contaminant dissolved in water. The higher the Henry's law constant for a given compound, the higher its concentration will be in the extraction air stream.
- Vapor pressure governs the tendency of a solid or liquid to evaporate. Vapor pressure is the force per unit area exerted by the vapor of the chemical in equilibrium with its solid or liquid form. Vapor pressure is applicable when NAPL is present and increases with increasing temperature.
- Boiling point indicates the temperature at which a compound's vapor pressure equals the vapor pressure of the atmosphere, which at sea level is approximately 760 millimeters of mercury (mm Hg). Inducing a vacuum in soil causes the pressure in the air-filled soil pores to decrease, leading in turn to a lowering of the boiling point and an increase in volatilization of the contaminant (USACE 2002).
- The molecular weight of compounds impacts adsorption ability. Adsorbents have different capacities for adsorbing different contaminants. Generally, high molecular weight compounds will adsorb better than low molecular weight compounds.
- Compounds exhibit different lower explosive limit (LEL) concentrations in air. Compounds with low LEL concentrations will require more dilution air to prevent explosive SVE air streams.

2.5 Regulatory Requirements

The requirements for application of SVE, MPE, and other systems for site remediation as well as the requirements for control of vapor-phase discharges from these systems are based on applicable regulations promulgated by federal, state, and local regulatory agencies. These regulations generally fall into the following three categories of requirements:

1. Control of off-gases to a best available control technology (BACT) standard (usually 95 percent contaminant destruction standard)
2. Exemption for treatment of SVE off-gases due to acceptably small contaminant emission rates (compared to industrial process emission rates)

3. Need for treatment of off-gases based on site-specific considerations (risks), including the type and concentration of contaminant(s) being treated and the distance to the nearest potentially impacted receptor

At the federal level, the 1990 amendments to the Clean Air Act (CAA) introduced new requirements for the control of hazardous air pollutant (HAP) emissions. These amendments identify 189 chemicals as HAPs as well as several sources of HAP emissions. All sources of HAPs within each category must be treated to a maximum achievable control technology (MACT) standard defined for that specific category. Many HAPs are likely to be extracted by SVE, MPE, and groundwater pump-and-treat systems that use air strippers. In addition, site remediation has been identified as a source category for HAP emissions. However, air emissions from site remediation regulated by rules established under federal corrective authorities are exempt from the site remediation National Emission Standard for Hazardous Air Pollutant (NESHAP). Cleanups conducted under State or voluntary cleanup programs are not exempted, and therefore, may be subject to the site remediation NESHAP.

The emission rates observed at SVE and MPE remediation sites are generally much lower than the rates defined under the MACT standards. The CAA stipulates that MACT standards apply when the off-gas is emitted from a "major" source, one that has the potential to emit 10 tons per year or more of a listed pollutant or 25 tons per year or more of a combination of pollutants. Although many of the compounds extracted in a typical SVE remediation system may be HAPs, emission rates are typically less than the 10- or 25-ton-per-year thresholds. For example, in order to meet the major source permit 10-ton-per-year threshold, a system treating 900 scfm of vapor would require a HAP concentration of at least 1,000 parts per million (ppm) as methane after any control system.

U.S. EPA, a state, or local agency may implement the air toxics program for control of HAPs. The CAA allows U.S. EPA to delegate authority to a state or local agency to implement an air toxics program in lieu of the federal program. Many states have specified emission control equipment and specific emission limits for sources emitting VOCs and other HAPs. State requirements are frequently more stringent than federal requirements, and many states have regulations and standards not addressed under federal regulations.

Some state agencies allow SVE-type systems to operate without off-gas treatment if the annual discharge of individual compounds or total mass is below a set default value or if the system can be shown to pose no significant risk to human health or the environment. Thus, regulations applicable to SVE off-gas treatment can be site-specific. For example, the Massachusetts Contingency Plan (MCP) provides graphs that indicate when off-gas treatment is, and is not, required for five specific groups of chemicals (such as gasoline). The criteria used for this distinction are chemical type, mass emission rate, and distance to the nearest receptor; however, in all cases, the MCP requires that SVE systems include an off-gas treatment component for the first 1,500 hours of operation to "guard against transient discharge anomalies" that can occur during initial SVE system operation. This provision reflects the observed phenomenon that SVE systems typically extract high concentrations of VOCs in the early stages of operation, followed by a steep decline in VOC removal rates (Massachusetts General Laws 1994).

3.0 THERMAL TREATMENT TECHNOLOGIES

Thermal treatment technologies destroy hydrocarbons in a vapor stream at elevated temperatures (exceeding 600 °F) by combusting or oxidizing the hydrocarbons to carbon dioxide and water. The general chemical reaction for hydrocarbon oxidation is as follows:

$$HC + O_2 + \text{heat} \rightarrow CO_2 + H_2O + \text{heat} \quad (1)$$

where

HC	=	Hydrocarbon
O_2	=	Atmospheric oxygen
CO_2	=	Carbon dioxide
H_2O	=	Water

Heat is required to achieve the necessary temperature for this reaction to occur; the required temperature is a function of several factors, including the presence of a catalyst. The heat shown on the right side of the equation represents the heat released by the reaction. Hydrocarbons in off-gas from SVE and other environmental remediation systems are typically in the form of VOCs as described in Section 2.0.

Thermal oxidation systems and ICEs are the two different types of thermal VOC treatment technologies discussed in this section. Additional information about these technologies is presented in the "Soil Vapor Extraction and Bioventing Engineer Manual" (USACE 2002) and "Air Pollution Control Cost Manual" (U.S. EPA 2002).

3.1 Thermal Oxidation

Thermal oxidation systems are commonly used to control VOC vapors generated from soil and groundwater remediation systems as well as to treat a wide variety of vapor streams from chemical processing, painting, printing, and pharmaceutical industrial sources. As of 1997, approximately 6,000 thermal oxidation systems were in operation worldwide and approximately 20 percent of these systems were used for remediation (ENSR 2000a and b). A survey of Superfund sites from 1982 through 2002 shows that thermal treatment (primarily catalytic oxidation) was the selected technology for SVE off-gas treatment for 25 percent of the 170 sites at which the type of off-gas treatment was reported (U.S. EPA 2004). The Federal Remediation Technologies Roundtable (FRTR), a collaborative group of government agencies involved in hazardous waste site cleanup, estimates that over 20 firms currently manufacture catalytic oxidation systems specifically for remedial activities (FRTR 2004).

3.1.1 Technology Description

A thermal oxidation unit typically consists of a fan or blower to move VOC-laden air; a filter-mixer to mix the VOC-laden air; a fan to supply combustion air; a combustion unit (reaction chamber) consisting of a refractory-lined chamber and one or more burners; heat recovery equipment (heat exchanger); and a stack for atmospheric discharge of the treated exhaust (Naval Facilities Engineering Service Center 2004). In some cases, post-oxidation treatment units are included. Figure 3-1 shows a generalized flow diagram for a typical SVE off-gas thermal oxidation system.

Figure 3-1. Generalized Flow Diagram of Typical Thermal Oxidation System

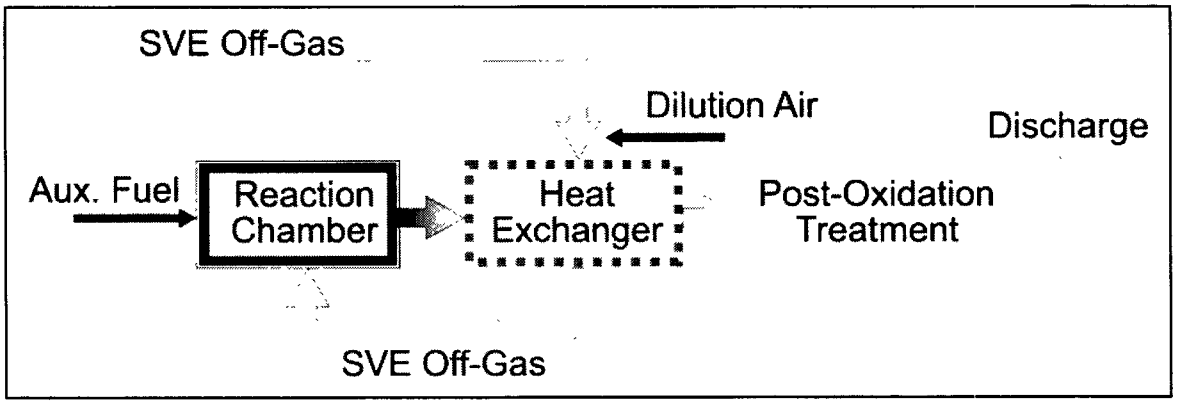

Source: Modified from U.S. EPA 2002
Processes in dashed boxes are not applicable to all oxidation systems.

Three general types of thermal oxidation systems are available for controlling VOC emissions[1]:

- Direct-flame thermal oxidizers (DFTO)
- Flameless thermal oxidizers (FTO)
- Catalytic oxidizers (Cat-Ox)

Key variables within each type of thermal oxidation system include the following:

- Extent and type of heat recovery system
- Post-oxidation treatment requirements (such as scrubbing)
- Metallurgy requirements for equipment
- Utility energy cost and source (heat from electricity, propane, natural gas, or fuel oil)

[1]A fourth thermal treatment technology that is not strictly a thermal oxidation process is the ICE, which is discussed in Section 3.2.

Each type of system operates somewhat differently, but all types destroy contaminants by raising the temperature of the gas stream to a sufficient level to promote oxidation (or combustion) of contaminants to carbon dioxide and water as shown in Equation (1). The VOCs in the off-gas act as a fuel source for the oxidation reaction. If the VOC concentrations are relatively low, there may be insufficient "fuel" to promote oxidation, and auxillary fuel must be added (such as natural gas or "fuel oil"). Sometimes the VOC concentrations are too high for the oxidation reaction to proceed safely, and the off-gas must be diluted with ambient air.

High VOC concentrations are typically treated using non-catalytic thermal oxidation systems, and lower VOC concentrations are often treated using Cat-Ox systems. DFTO and FTO non-catalytic thermal oxidizers typically operate at 1,200 to 2,000 °F (Alley 1998), and Cat-Ox systems typically operate at 500 to 900 °F. If the off-gas contains sufficient concentrations of VOCs to sustain the high operating temperatures, a catalyst is not needed. Where the off-gas VOC concentrations are relatively low, a catalyst will lower the amount of auxiliary fuel that must be supplied to sustain the oxidation reaction, and operational expenses will be reduced compared to a non-catalytic system.

In a complete oxidation reaction, VOCs are oxidized to carbon dioxide and water. If halogenated compounds are present in the SVE off-gas (such as a chlorinated VOC like TCE), the resulting combustion products can include acid gases (such as hydrochloric acid). The acid gases require further treatment with an acid scrubber (for example, caustic solution to neutralize the acid) prior to discharge. The efficiency of a thermal oxidation system is a function of "the three Ts": temperature, time (residence time in the combustion zone), and turbulence (mixing of the VOCs and oxygen) as discussed in Section 3.1.4.

The following sections discuss DFTOs, FTOs, Cat-Ox, hybrid thermal/Cat-Ox systems, and recovery of heat generated during thermal oxidation.

3.1.1.1 Direct-Flame Thermal Oxidizers

The simplest type of thermal oxidizer is a DFTO system without heat recovery (no heat exchanger following the combustion chamber). These systems are sometimes called "direct-fired thermal oxidizers" or "afterburners" and do not use a catalyst. In a DFTO system, contaminated vapor from SVE system off-gases enters a reaction chamber, where an open flame burns the vapors and additional fuel. VOCs are oxidized as they are exposed to the necessary oxidation temperatures.

3.1.1.2 Flameless Thermal Oxidizers

Combustion in FTO systems occurs within a chemically inert, porous ceramic bed heated to oxidation temperatures. In FTO systems, the mixing zone is where the fuel is pre-mixed with off-gas at the inlet of the reactor before it passes through a pre-heated ceramic matrix, which heats the organic vapors (Thermatrix 2005). Once the vapors reach oxidation temperature, they auto-ignite in the system's

reaction zone. The energy released by combustion heats the ceramic matrix of the mixing zone. If the waste stream has sufficient energy content, then the system is self-sustaining after it reaches its operating temperature. One vendor claims that VOC vapor streams with as little as 10 British thermal units per cubic foot (BTU/cubic ft) can sustain the temperatures necessary for oxidation (Thermatrix 2005). Like DFTO systems, this approach does not use a catalyst to aid combustion. Figure 3-2 presents a schematic diagram of an FTO system.

Figure 3-2. Flameless Thermal Oxidizer System

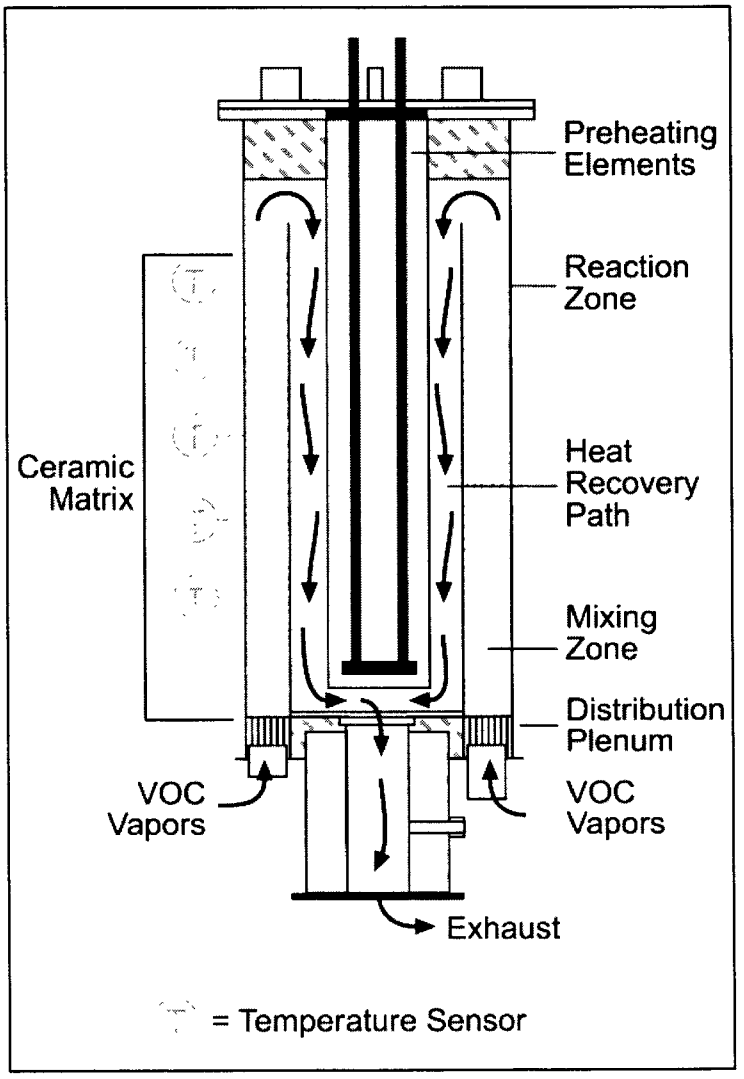

Source: Thermatrix 2005
System operates with straight-through flow and no heat recovery

3.1.1.3 Catalytic Oxidizers

A Cat-Ox system uses a catalyst and heat to oxidize SVE off-gas contaminants. The catalyst enables the oxidation reaction to occur at much lower temperatures than required by non-catalytic thermal oxidation systems. Most Cat-Ox systems operate at 500 to 900 °F depending on the compound being oxidized and the catalyst. The addition of a catalyst accelerates the rate of oxidation by adsorbing oxygen and the contaminant on the catalyst surface, where they react to form carbon dioxide and water. As with non-catalytic thermal oxidation systems, when chlorinated VOCs are present in the contaminant off-gas stream, acid gas is produced.

The most common catalysts for VOC combustion are the noble metals platinum, palladium, and rubidium. The metal is deposited on an aluminum oxide-coated ceramic or stainless steel substrate to produce the monolith (or honeycomb) form of the catalyst. Other types of catalyst are base-metal catalysts, such as chromium- or manganese-oxides. Base-metal catalysts are usually supplied in pelletized form (Alley 1998). Metal oxide catalysts are typically used to treat vapor streams containing chlorinated compounds (U.S. EPA 1991a).

In a Cat-Ox system, the contaminated SVE off-gas stream is preheated prior to its interaction with the catalyst. The off-gas stream then enters the catalytic chamber and is evenly distributed over the catalytic beds. An exothermic combustion reaction takes place and the treated vapor (combustion products and byproducts) is then discharged.

The primary advantage of Cat-Ox systems compared to other thermal oxidation systems is the lower energy requirement resulting from lower oxidizing temperatures. Consequently, operating costs are lower. Also, less costly metallurgy can be used in Cat-Ox systems than in non-catalytic oxidizers because of the lower operating temperatures. In addition, the catalyst increases the rate of reaction, which lowers the residence time of the contaminants in the reaction chamber and allows use of a smaller reaction chamber than with non-catalytic systems to process the same flow rate.

3.1.1.4 Hybrid Thermal/Catalytic Oxidizer Systems

Because off-gas from SVE systems fluctuates in concentration over time, hybrid thermal/Cat-Ox systems (also called hybrid systems) are designed to allow the SVE system to be operated at a higher temperature without a catalyst (thermal mode) in the initial stages of an SVE project when the extracted VOC contaminant concentrations are usually at their highest. When the VOC concentrations in the SVE off-gas decrease, the hybrid system converts to operate as a Cat-Ox system. Many vendors offer hybrid oxidizer systems. Figure 3-3 shows a typical hybrid system.

Figure 3-3. Hybrid Thermal/Catalytic Oxidizer System

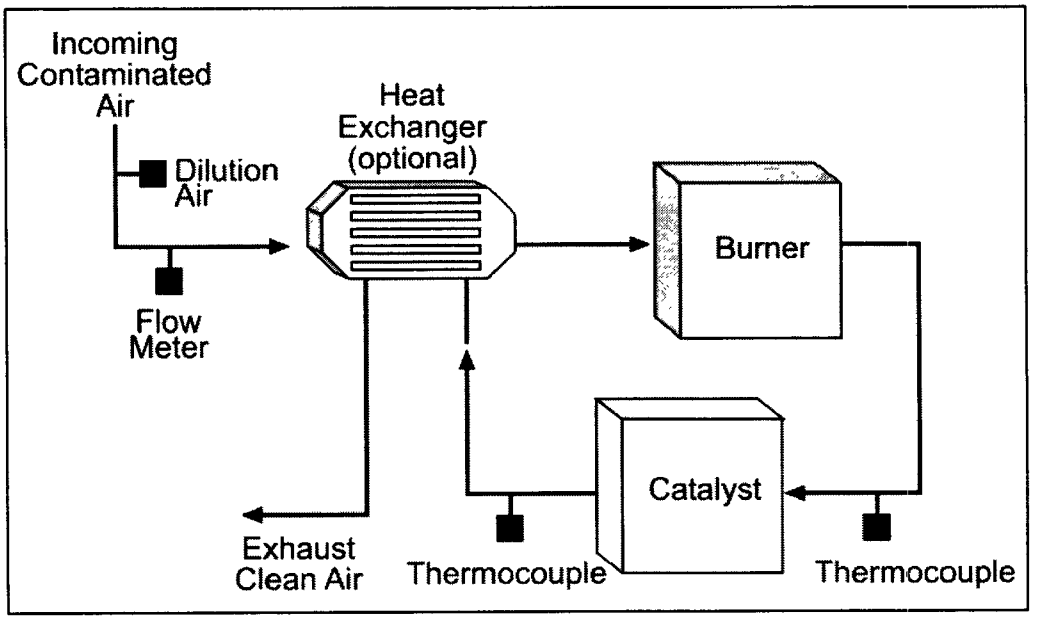

Source: Anguil 2004

3.1.1.5 Heat Recovery

Thermal and Cat-Ox systems can be designed to reuse heat generated during combustion. Heat recovery methods use either recuperative or regenerative heat exchangers to reuse heat energy, reduce the residence time of the waste stream in the system, and reduce fuel costs. Heat recovery can be applied to both catalytic and non-catalytic oxidation systems.

Recuperative Thermal Oxidizers

Figure 3-4 shows a recuperative thermal oxidizer. In these systems, combustion takes place, and then the hot, treated vapor from the reaction or catalytic chamber is directed to a heat exchanger shell. Incoming SVE off-gas flows through the tubes of the shell-and-tube heat exchanger, and heat is exchanged from the hot, treated vapor stream to the cool, incoming untreated vapor stream. The streams do not mix. Because the influent stream is preheated in the heat exchanger, less fuel is needed to bring the contaminated vapor up to oxidation temperature. Recuperative systems can recover up to 70 percent of the heat of the reaction chamber effluent (U.S. EPA 2002); therefore, they require substantially less energy than non-recuperative systems. When chlorinated solvents are extracted, the design of recuperative heat exchangers generally limits flue gas cooling to avoid condensing acid gases onto heat exchanger surfaces and minimize corrosion.

Figure 3-4. Recuperative Thermal Oxidizer

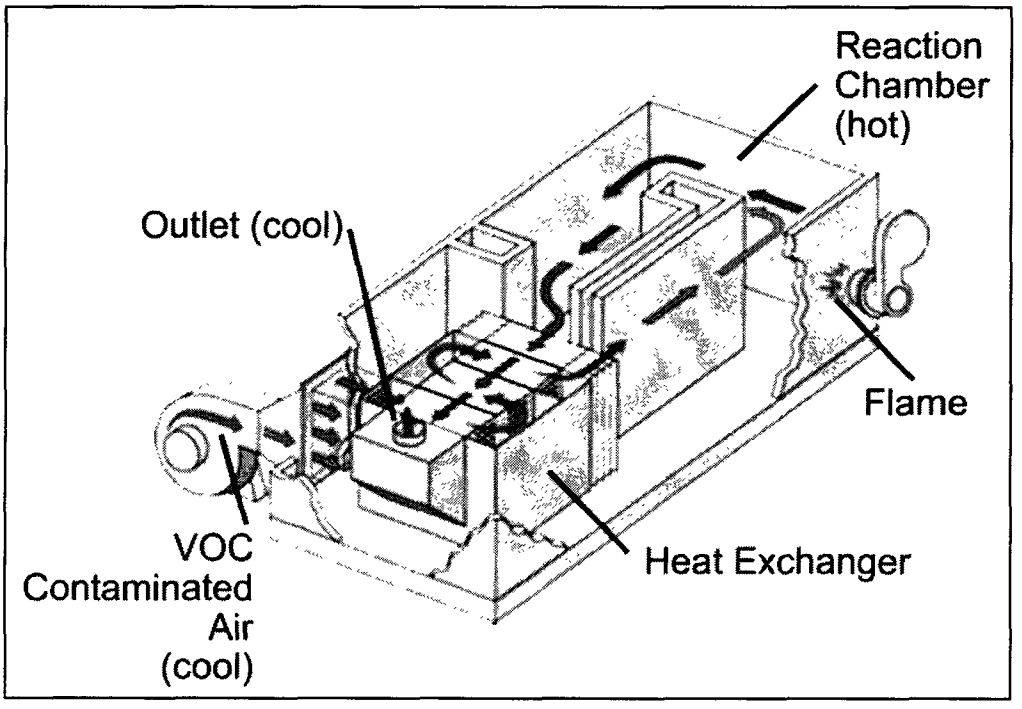

Source: Rafson 1998
Cool off-gas enters the system and flows directly through the tubes of the heat exchanger for heating before entering the reaction chamber. The flame in the reaction chamber oxidizes the contaminants and generates a hot vapor stream that flows through the shell of the heat exchanger to be cooled before discharge. The heat recovered in the heat exchanger is used to heat the incoming off-gas.

Regenerative Thermal Oxidizer

Regenerative thermal oxidizers (RTO) use more complex and more efficient heat exchange systems than recuperative systems to heat incoming SVE off-gas and promote the oxidation reaction. These units consist of a series of beds of heat-resistant media (such as ceramic) that absorb energy from the hot combustion product outlet gas. That energy is then used to preheat the incoming SVE off-gas. Figure 3-5 shows a typical regenerative thermal oxidizer system. The inlet gas first passes through a hot bed of ceramic transfer blocks that heats the stream to its ignition temperature (and cools the bed). If the desired temperature is not attained, a small amount of auxiliary fuel is added in the combustion chamber. The hot gases then react, releasing energy in the combustion chamber and while passing through another bed of ceramic transfer blocks, thereby heating the second bed to the combustion chamber outlet temperature. The process flows are then switched: now the inlet stream is fed to the hot bed. This cyclic process affords very high energy recovery (up to 95 percent) and may occur several times each hour (U.S. EPA 2002). It should be noted that complex controls and large, high-temperature valves add to the capital cost of these types of systems. However, the lower expense for energy can off-set these higher capital costs in some cases.

Figure 3-5. Regenerative Thermal Oxidizer

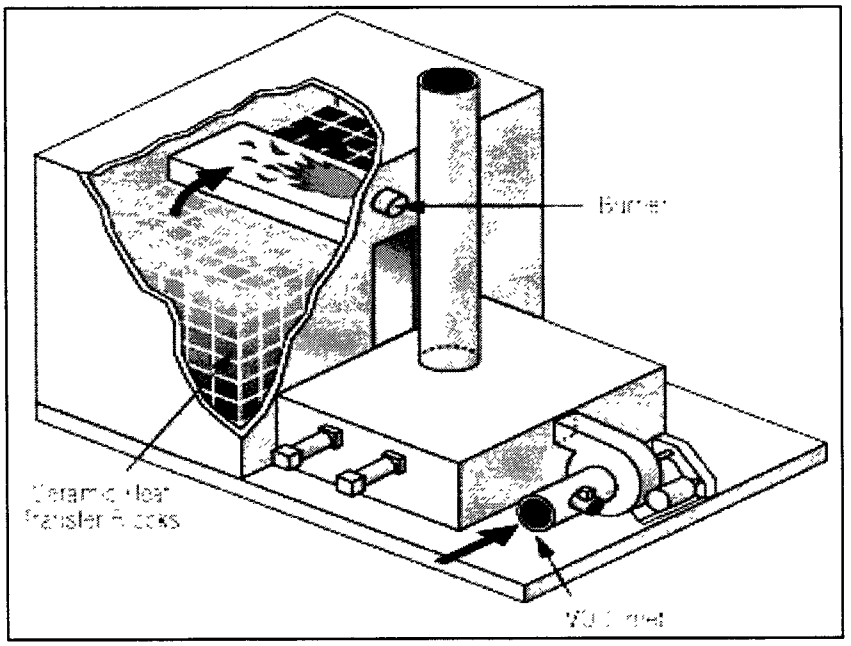

Source: Rafson 1998
Off-gas first passes through a hot bed of ceramic transfer blocks that heats the off-gas to its ignition temperature (and cools the bed). The hot gases then react and release energy while passing through another bed of ceramic transfer blocks, which is heated by the reaction. The process flows are then switched, and the incoming off-gas is fed to the hot bed.

3.1.2 Applicability

Thermal oxidizers are often chosen for their reliability in achieving high VOC DREs. Thermal oxidizers are capable of treating waste streams containing a wide range of VOC concentrations if sufficient oxygen is present. Generally, thermal oxidizers easily reach DREs higher than 99 percent except for RTOs, which achieve somewhat lower DREs. Thermal oxidation is a dependable treatment method when strict release standards must be achieved. In addition, thermal treatment can produce a buoyant plume that disperses well in the atmosphere.

Target contaminant groups for SVE off-gas thermal oxidation include non-halogenated VOCs, SVOCs, and fuel hydrocarbons (FRTR 2004). Specific classes of compounds readily destroyed in thermal oxidizers include alcohols, aliphatics, aromatics, esters, and ketones. Halogenated VOCs are also readily destroyed; however, post-treatment is often required (typically a caustic scrubbing system) to capture acid gases formed by the oxidation of halogenated compounds. The type of thermal oxidation system most appropriate for a specific site depends on the type(s) and concentration(s) of contaminant(s); off-gas extraction flow rate; required DRE; and the British thermal unit (BTU) value of the contaminant streams to be treated.

The influent concentration to a thermal oxidizer system is often expressed as the waste stream's BTU content or a percentage of the treated contaminant stream's LEL. The LEL is defined as the minimum concentration of a chemical vapor in atmospheric air (for example, 21 percent oxygen at 20 °C) that is sufficient to support combustion ("burning"). For safety reasons, the influent concentrations to an oxidizer are generally limited to a fraction of the LEL. Concentrations below the LEL can be obtained by diluting the SVE off-gas with ambient air using an LEL detector to regulate the amount of ambient air added. For SVE systems, influent concentrations are typically limited to 10 to 25 percent of the LEL to ensure safe operation. In industrial settings where the influent concentrations are more predictable, thermal oxidation systems are often safely operated at higher fractions of the LEL, sometimes higher than 50 percent of the LEL. It is important to recognize that different gases have different LELs. Table 3-1 lists LELs (presented as percent-of-gas-in-air) for an assortment of hydrocarbons commonly extracted by SVE systems.

Table 3-1. Lower Explosive Limits for Selected Hydrocarbons

Hydrocarbon	LEL in Air (%)[a]	Hydrocarbon	LEL in Air (%)[a]
Methane	5.0	Gasoline	1.4
Ethane	3.0	Acetone	2.5
Propane	2.1	Methanol	6.0
n-Butane	1.6	Toluene	1.1
n-Pentane	1.5	m- and p-Xylenes	1.1
n-Hexane	1.1	1,4-Dioxane	2.0
Benzene	1.2	Methyl ethyl ketone	1.4

Source: NIOSH 2005, Canadian Association of Petroleum Producers 1999

Notes:

LEL = Lower explosive limit

ppmv = Part per million by volume

a One percent (%) in air is equivalent to 10,000 ppmv. For example, the LEL for methane can also be expressed as 50,000 ppmv.

As described above, the thermal oxidation system selection process for a remediation site is affected by a number of important factors. Some generalizations can be made for when each type of system is most appropriate; however, almost all SVE off-gases can be treated using the different thermal oxidation systems discussed. In general, DFTO systems are best suited for low-flow, high-BTU, and high-VOC concentration SVE off-gases (such as vapors extracted from a recent gas station release). In contrast, FTOs are most often used for high-flow, low-BTU, and low-VOC concentration off-gas streams (such as industrial sites with historic solvent contamination). Cat-Ox systems are used for both low- and high-flow rates, with relatively low-BTU and low-VOC concentration streams. These generalizations are somewhat different for remediation systems (in which flow rates range from 100 to 1,500 scfm) than for industrial systems, which typically have higher flow rates of up to 100,000 scfm. The higher flow-rate industrial off-gas streams are generally treated using non-catalytic oxidation systems.

The likelihood that influent VOC concentrations to the thermal treatment system will decrease over time, thereby affecting both cost to operate and achievable DREs, is an important consideration for SVE off-gas application selection. This consideration must be accounted for in the engineering and economic analysis to select both thermal treatment as well as the specific type of thermal treatment system. For this reason, some practitioners choose hybrid thermal treatment systems that can be readily converted from thermal to Cat-Ox mode.

Also, because thermal oxidizers treat relatively small off-gas flow rates generated by most SVE systems and are in use for a limited period of time (usually less than 5 years), many SVE practitioners manage the challenge of decreasing concentrations by employing a mobile system. For example, a portable, skid-mounted RTO system can be used during initial treatment when concentrations are highest. Then, depending on the expected rate of decrease in VOC concentrations over time, the regenerative system can be removed and replaced by a portable Cat-Ox or other treatment system. Another option is to rent a thermal treatment unit to treat higher concentrations and then switch to a more permanent treatment system (such as carbon adsorption) once concentrations have decreased.

3.1.3 Limitations

Thermal oxidation is a mature technology that has been successfully implemented at many sites. It is a robust and well understood technology and thus readily implemented at SVE sites. Nevertheless, there are some technical and logistical limitations to using thermal oxidation. A significant limitation of thermal oxidation for treating SVE off-gas is the comparatively high capital expense as well as the often high cost for energy to heat the incoming SVE off-gas. For example, compared to the use of activated carbon for treating off-gas, the cost of auxiliary fuel (utility costs) can often exceed the cost of carbon replacement, making thermal oxidation cost-prohibitive.

There are also environmental regulatory concerns about using thermal oxidizers. Although thermal oxidizers are capable of treating waste streams containing virtually any VOC concentrations, incomplete combustion will occur if sufficient oxygen is not present or if the "three Ts" are not adequately addressed (temperature, time, and turbulence; see Section 3.1.4). Other potential limitations include community acceptance and ability to obtain the necessary permits for operation.

The oxidation process can result in treated vapor streams that contain undesirable byproducts. Generally, there are two classes of oxidation byproducts: products of complete combustion (PCC) and PICs. The PCCs are carbon dioxide and water. These compounds are innocuous and can be discharged directly to the atmosphere. Other compounds generated can include nitrogen oxides (NO_x) and/or sulfur oxides (SO_x) (if sulfur compounds such as hydrogen sulfide are extracted from the subsurface); however, these compounds are not typically formed during SVE off-gas treatment using thermal oxidizers. At sites where chlorinated or fluorinated hydrocarbons are present in the off-gas, hydrochloric or hydrofluoric acid gases may be produced from combustion. The acid gas produced can generally be treated using a mild caustic scrubbing solution following oxidation, although metal compatibility must be considered during equipment selection. For example, the presence of these

compounds requires specialty steel, which greatly increases the capital cost for the system and makes heat recovery less cost-effective or even impractical. Hastelloy® is one example of a common upgrade material used when acid gases are produced.

PICs are undesirable and include untreated VOCs, carbon monoxide, and toxic compounds, such as polychlorinated dibenzo-p-dioxins (PCDD) and polychlorinated dibenzofurans (PCDF), collectively referred to as PCDD/Fs (see Section 3.1.6 for additional information). The presence of significant concentrations of PICs often results from thermal oxidation systems that are not operated properly. Proper operation of the thermal oxidizer or additional vapor treatment should assist in minimizing the production of PICs.

Cat-Ox systems require more maintenance than non-catalytic thermal systems. An operating problem associated with Cat-Ox systems is their vulnerability to chemicals and/or particulate matter that "poison" the surface of the catalyst. Poisons mask active sites or change the selectivity of the catalyst for particular reactions or reaction types. Poisons can also deactivate the catalyst by physically preventing interaction of VOCs and the catalyst. Compounds poisonous to catalysts include halogens; metals; and silicon-, phosphorus-, or sulfur-containing compounds. Catalysts can also be deactivated if the vapor stream becomes too hot, either chemically or physically altering the catalyst. Deactivated catalysts must be regenerated or disposed and replaced.

Certain aliphatic compounds, such as propane, ethane, and methane, combust at higher temperatures (more than 900 °F) than typical for Cat-Ox systems (Rafson 1998). To heat the waste stream to sufficient temperatures to destroy these compounds would risk thermally deactivating the catalyst. In addition, energy costs to heat the waste stream to such temperatures could render the technology uneconomical. Thorough characterization of the vapor stream is required to ensure that the catalyst is compatible with the contaminants.

Finally, thermal oxidizers are generally more complex to start up and operate than carbon treatment systems and require more maintenance. More operator training is typically required than for adsorption systems to address safety considerations, management of auxiliary fuel, and other system issues. When an SVE system is first turned on, the extracted vapor concentrations often exceed 10 to 25 percent of the LEL for the SVE off-gas mixture, particularly at fuel release sites. Consequently, a trained operator is necessary to ensure that sufficient clean ambient air (often termed "dilution air") is added to the extracted vapor stream to maintain the oxidizer influent vapor concentrations at safe levels. As the extracted vapor concentrations decrease, less dilution air is necessary, until eventually none is needed.

3.1.4 Performance

Thermal oxidation systems are robust and can treat a broad range of SVE off-gas streams. The systems can be designed to oxidize 95 percent to greater than 99 percent of the influent VOCs,

independent of the mass of contaminants entering the oxidizer (sometimes referred to as the "mass loading").

RTOs have somewhat lower efficiencies because of the alternating flow between beds; however, a survey of four systems showed DREs ranging from 98 to 99.8 percent for low-concentration inlet streams of less than 100 parts per million by volume (ppmv) (U.S. EPA 1995b). According to Heumann (1997), catalytic systems are designed to achieve DREs from 90 to 98 percent. U.S. EPA (1995b) reported DREs ranging from 72 to 99.6 percent for several sites where Cat-Ox was being used. Lower DREs were generally seen at sites where higher concentrations of chlorinated hydrocarbons were present.

The performance of a thermal oxidation system is largely defined by the DRE, and DRE depends primarily on three essential factors (the "three Ts"):

1. Temperature - achieving and maintaining the required oxidation temperature
2. Time - allowing sufficient residence time for the reaction to occur
3. Turbulence - ensuring sufficient reactant mixing

To improve performance and increase the DRE, it is necessary to increase the temperature of the reaction, increase the residence time, or increase both. Increasing the residence time generally requires reducing flow (extraction) rates, which would in turn increase the duration of remediation. Thus, to avoid reducing extraction rates, it is generally necessary to raise the system temperature to achieve higher DREs. Similarly, to address fluctuations in concentrations and composition of off-gas streams, the oxidation temperature is the easiest operating parameter to adjust to achieve the desired DRE. The operating temperature of the unit can be adjusted by changing the amount of heat added to the system. For DFTO and FTO systems, the flow of auxiliary fuel to the combustion chamber or reaction zone can be adjusted. For Cat-Ox systems, the amount of time the waste stream is preheated prior to entering the catalyst bed can be adjusted.

Table 3-2 lists the theoretical non-catalytic oxidation temperatures for select VOCs required for 99 percent DRE for residence times of 0.5, 1, and 2 seconds. The chlorinated compounds in this table require significantly higher temperatures for oxidation. It is important to note that the oxidation temperatures listed are idealized values. Because most waste streams contain mixtures of VOCs, the actual oxidation temperatures required will vary and usually can only be determined after system start-up. Field test data show that non-catalytic thermal oxidizers should generally be run at a temperature of approximately 1,600 °F and with a residence time of at least 0.75 second to ensure a 98 percent DRE for non-halogenated VOCs (U.S. EPA 1995b). Temperatures of near 2,000 °F are required for waste streams containing chlorinated VOCs.

Table 3-2. Required Oxidation Temperatures to Achieve 99% Destruction and Removal Efficiencies for Select Compounds

Compound	Theoretical Combustion Temperature (°F)		
	Residence Time of 0.5 Second	Residence Time of 1.0 Second	Residence Time of 2.0 Seconds
Acetic anhydride	805	771	738
Acetonitrile	1,997	1,887	1,786
Acrylonitrile	2,056	1,909	1,778
Aniline	1,440	1,402	1,366
Azomethane	892	866	841
Benzene	1,622	1,538	1,461
Butene	1,708	1,653	1,600
Carbon tetrachloride	1,987	1,822	1,679
Chloroform	1,262	1,217	1,174
Dichlorobenzene	1,668	1,583	1,504
Dichloromethane	1,602	1,553	1,506
Ethane	1,994	1,816	1,662
Ethyl chlorocarbonate	1,028	972	920
Ethyl nitrile	692	666	641
Ethyl peroxide	463	442	423
Ethylene dibutyrate	985	938	894
Ethylidene dichloride	1,341	1,293	1,246
Hexachlorobenzene	1,802	1,711	1,626
Hexachlorobutane	1,553	1,502	1,453
Hexachloroethane	1,438	1,347	1,265
Methane	1,822	1,742	1,667
Methyl iodide	1,034	966	959
Monochlorobenzene	2,028	1,838	1,675
Nitrobenzene	1,355	1,316	1,279
Paracetaldehyde	796	770	744
Pentachlorobiphenyl	1,404	1,367	1,331
Propylene oxide	1,312	1,272	1,233
Pyridine	2,041	1,856	1,697
Tetrachlorobezene	1,895	1,761	1,642
Tetrachloroethene	2,062	1,922	1,798
Toluene	1,379	1,334	1,292
Trichlobenzene	1,653	1,567	1,487
Trichloroethane	1,336	1,262	1,194
Vinyl chloride	1,415	1,373	1,334

Source: Alley 1998

3.1.5 Engineering Considerations

Engineering considerations include design issues and operating issues as discussed below.

3.1.5.1 Design Issues

The proper size for a thermal oxidation system is governed by several factors. The required performance of the system is largely defined by the DREs required. The DREs achieved depend primarily on the "three Ts" (temperature, time, and turbulence). Temperature can be adjusted in the field, but the size of the combustion chamber impacts residence time and is designed by the manufacturer. Thermal treatment systems should be designed so that the required combination of temperature, residence time, and turbulence can be achieved under all expected flow and concentration conditions; however, if insufficient time or attention is devoted to adequate system design, then thermal oxidizer systems can fail and, in some cases, equipment can catch fire or melt.

Most thermal oxidizers used for industrial processes have a life expectancy of approximately 20 years (ENSR 2000b). Because SVE remediation systems typically operate for 5 years or less, owners and operators of thermal oxidation systems will often move the systems after completing treatment at each site. The most common heat recovery technique for SVE off-gas treatment is to use hot exhaust gas from the combustion chamber to preheat the cooler incoming vapor stream; however, thermal oxidizers for SVE systems can be integrated into operating facilities that may have other desirable uses for the recovered heat (such as to heat boilers). Heat recovery systems can range from simple shell-and-tube heat exchangers to complex systems of ceramic beds with sophisticated controls and valves. In general, the greater the degree of heat recovery, the greater the capital cost and the more complex the system. The cost of heat recovery can be a significant portion of the overall installed cost of the thermal treatment system. The benefits of heat recovery (lower energy costs and ancillary use of recovered heat) must be weighed against the capital cost for the heat recovery system.

For most SVE applications, when the system is not integrated into an operating facility (such as a chemical plant, oil refinery, or manufacturing facility), there are no practical applications for facility reuse of recovered heat. In these cases, the capital cost of heat recovery must be weighed against the cost savings in decreased energy required to heat SVE off-gases in the thermal treatment system.

The PCCs for VOCs are carbon dioxide and water. When chlorinated or fluorinated hydrocarbons are present in the waste stream, hydrochloric or hydrofluoric acid gas may be produced by combustion. The acid gas produced can be treated using a mild caustic scrubbing solution before the treated vapor stream is discharged to the atmosphere; however, the presence of these compounds requires specialty steel for construction, which greatly increases capital costs. This requirement for special materials resulting from the need to treat acid gases also makes heat recovery much less cost-effective or sometimes even impractical when such contaminants are present.

3.1.5.2 Operating Issues

Thermal oxidation systems are successful at treating most SVE off-gases if the proper temperature, residence time, and turbulence are maintained. Optimization of these parameters is usually not difficult, and thermal oxidation systems often require only minimal maintenance after start-up; however, if thermal oxidation systems are not properly operated, they can form PICs, including PCCD/Fs (see Section 3.1.6).

Cat-Ox systems are also able to maintain high DREs, but these systems typically require more maintenance and are more sensitive to changing VOC concentrations and process conditions than non-catalytic thermal oxidation systems. In addition, the potential for catalyst deactivation is a major concern. Recent generations of catalysts have much longer lives and greater poison resistance than their predecessors, and have greater capabilities, including the destruction of chlorinated organic materials (ICAC 2005). A catalyst bed should last for approximately 5 years of continuous operation (Rafson 1998). Catalyst life may exceed 5 years with proper washing and regeneration techniques.

Proper mixing of the waste stream with oxygen (turbulence) is a critical factor in achieving and maintaining thermal oxidation DREs. The theoretical oxygen requirement for complete oxidation of a given compound can be determined stochiometrically from Equation (1) in Section 3.0. If the SVE off-gas stream does not contain sufficient oxygen and additional oxygen is required for complete oxidation, then ambient air can be mixed with the SVE off-gas before the gas enters the combustion chamber. In the early stages of operation of an SVE system, free product and VOC-saturated soils can be present. During this period, the oxygen content of the extracted vapors is often relatively low and the VOC concentrations are relatively high. Under these conditions, addition of ambient air will improve the DREs of the thermal oxidizer (both catalytic and non-catalytic). Further, the maximum desired influent vapor concentration is typically 10 to 25 percent of the LEL (see Section 3.1.2). For both of these reasons, substantial dilution air is often required in the initial stages of system operation.

3.1.6 Residuals Management

Residuals associated with thermal oxidation systems include PCCs and PICs. Their management is discussed below. Cat-Ox systems have an additional residual management concern, which includes the disposal of spent catalysts.

3.1.6.1 Products of Complete Combustion

The high operating temperatures of thermal oxidizers can cause the formation of undesirable byproducts that require additional treatment. High temperatures are conducive to the production of the NOx gases, nitric oxide and nitrogen dioxide. Nitric oxide forms at temperatures above 1,300 °F when molecular nitrogen (from the air) and oxygen react as follows:

$$N_2 + O_2 \leftrightarrow 2NO \quad (2)$$

Nitric oxide and oxygen can react at cooler temperatures, generally below 1,300°F, to form nitrogen dioxide as follows:

$$NO + \frac{1}{2} O_2 \leftrightarrow NO_2 \quad (3)$$

NO_x gases initiate the formation of photochemical smog, and at high atmospheric levels trigger respiratory-related health problems. NO_x gases are not commonly produced from SVE applications; however, significant NO_x can be formed from VOCs that contain nitrogen. Because of the relatively low volume of SVE off-gases treated by thermal oxidation, the contribution of NO_x to atmospheric levels is relatively small compared to other combustion sources. SO_x could similarly be formed during SVE off-gas treatment if sufficient sulfur-containing compounds are present and sufficiently high temperatures; however, suitable conditions for SO_x formation are extremely rare or non-existent during SVE off-gas treatment.

3.1.6.2 Products of Incomplete Combustion

The most common PIC generated by thermal oxidation is carbon monoxide (CO). PCDD/Fs may also be formed as PICs, and the concern over their potential formation has become a limitation for using thermal oxidizers at some sites. To minimize the formation of PICs, most commercial thermal oxidation systems are designed to have sufficient fuel/air mixing processes and operate at high temperatures (U.S. EPA 1997b).

U.S. EPA (2003) describes three primary scenarios for the formation of PCDD/Fs during combustion processes:

1. Incomplete destruction of PCDD/Fs present in the source materials during combustion
2. Formation of PCDD/Fs during combustion from precursor compounds, which can be chlorinated aromatic ("ringed") hydrocarbons that may be structurally similar to PCDD/Fs
3. Formation of PCDD/Fs from simple organic compounds in the ductwork downstream of the combustion chamber as the treated gas stream is cooled (referred to as "*de novo* synthesis")

Dioxin formation is catalyzed by the following additional conditions (Alley 1998; U.S. EPA 1996):

- Temperatures between 480 and 840 °F (they showed the highest concentrations of PCDD/F);
- The presence of particulate matter in the waste gas that contains a metal as an element oxide or other compound; or
- A transition metal catalyst (such as copper, iron, zinc, nickel, manganese, chromium, titanium, or vanadium) in the gas phase.

PCDD/F formation has long been a concern in municipal refuse incineration, where parameters that promote their formation are often ideal. Incinerators, including industrial, municipal, and stationary Resource Conservation and Recovery Act (RCRA) hazardous waste incinerators, may process materials containing PCDD/Fs. By improving combustion efficiencies that reduce PIC formation, these incinerators have been able to reduce emissions to acceptable levels (Alley 1998).

Incomplete combustion is generally due to inadequate air (oxygen), mixing, and/or temperature conditions to support the complete destruction of PCDD/Fs during combustion. Processing of chlorinated or fluorinated compounds at these incinerators can form PCDD/F precursors with temperatures at about 930 °F. This temperature range can occur for fairly long periods in refuse incinerator heat recovery systems, where high-pressure steam generation is common. In addition, gases within these incinerators typically have significant time after combustion in the so-called *de novo* temperature range (between 480 to 840 °F). This temperature range is typical in refuse incinerator semi-dry scrubbing units. Refuse incinerators also have the necessary particulate matter for *de novo* synthesis. These incinerators produce a substantial amount of particulate matter containing very high concentrations of heavy metals. The combustion flue gases can contact these particulates and catalyze PCDD/F formation reactions. Additional information about PCDD/F formation is presented in U.S. EPA's "The Inventory of Sources and Environmental Releases of Dioxin-Like Compounds in the United States: The Year 2000 Update" (U.S. EPA 2005b).

Although there are well-documented reports of PCDD/F emissions from refuse incinerators as well as a variety of chemical and manufacturing industry sources, data for SVE off-gas thermal oxidizers are limited (U.S. EPA 2003). The limited data available are summarized below for potential PCDD/F formation as a result of thermal oxidation of SVE off-gases for the three primary scenarios listed previously.

Scenario 1 - Because SVE systems are not used typically to treat sites where PCDD/F contamination is present, this scenario is not probable. Limited measurements of PCDD/F emissions from thermal oxidizers used to treat SVE off-gases indicate that when aromatic compounds are present in the SVE off-gases (either extracted from the ground or from ambient dilution air), they are destroyed within the oxidizer (Hart 2004).

Scenario 2 - This scenario is not likely at most SVE sites because the most common compounds considered precursors of PCDD/Fs are chlorobenzenes, chlorophenols, and polychlorinated biphenyls (PCB), which are not frequently present at sites remediated using SVE (U.S. EPA 2003). Of these compounds, only the lower molecular weight compounds, including mono-chlorobenzene, phenol, and possibly dichlorobenzene, are sufficiently volatile to be extracted by an SVE system. In addition, thermal oxidation for SVE systems operating at 930 °F lasts a very short period when flue gas quenching is applied and a relatively short period when heat recovery systems are used.

Scenario 3 - Chlorinated VOCs commonly observed at SVE remediation sites are chlorinated aliphatics, such as chloroethanes and chloroethenes. These compounds are not typically identified as precursors for PCDD/F formation, but they may be candidates for source material for *de novo* synthesis. This scenario is the most likely mechanism for PCDD/F formation for SVE systems using thermal treatment units (Hart 2004). However, design temperatures and residence times can be increased to limit PIC formation when chlorinated compounds are combusted. Also, wet scrubbing systems are generally used when chlorinated VOCs are combusted. These systems operate below 200 °F, rapidly cooling combustion gases below the *de novo* synthesis temperature range and minimizing dioxin formation potential.

3.1.7 Cost and Economics

Thermal treatment is generally the most cost-effective remedial technology for SVE off-gas treatment when high VOC concentrations are involved, and this technology offers the advantage of permanent, efficient contaminant destruction within a relatively short time-frame. The costs to design, build, install, and operate thermal treatment systems for SVE off-gases are driven by several factors, including the expected waste stream flow rate, waste stream composition and changes in composition over time (which impacts metallurgy and post-combustion treatment requirements), the degree of heat recovery, and the required DRE.

It is difficult to compare costs for different thermal treatment systems because of the large cost impact of key site-specific variables (such as degree of heat exchange, type and cost of energy available, and concentrations and types of contaminants treated). Standard cost curves depicting cost versus capacity are generally not available for these reasons, and costs are quoted on a site-specific, case-by-case basis; however, some cost guidelines based on case studies are provided for both capital and operating costs.

3.1.7.1 Capital Cost

Capital costs include the design, procurement, construction, and installation costs for the thermal treatment system. Key variables that influence capital costs include the following:

- SVE off-gas flow rate and composition
- Presence or absence of a catalyst
- Degree of heat recovery desired
- Requirements for management of residuals (post-thermal treatment requirements)
- Expected life (and reuse) of the equipment

A key management tool for capital cost control is flexibility – the portability of the system for use at other SVE off-gas treatment sites (or for other remediation applications, such as treatment of vapors by an air stripper) will allow some capital costs to be shared by various users.

The FRTR estimates the following capital equipment costs for a range of thermal oxidation unit sizes. Equipment costs range from $20,000 for a 100-scfm unit, $100,000 for a 500-scfm unit, and $200,000 for a 2,000-scfm unit (FRTR 2004). Actual capital costs can vary substantially from these estimates, depending on the variables described above. The case studies summarized below provide some insight into the capital costs for specific site conditions.

Case Study 1: An electric-powered Cat-Ox system was used for five years to treat off-gas from an SVE system in Massachusetts. The main contaminant of concern was toluene. Electricity rather than natural gas was selected for supplemental heat energy because of availability issues and ease of use. The Cat-Ox system had a capacity 300 scfm, a process catalytic temperature of 630 °F and a 65 percent effective air-to-air heat exchanger. The cost to purchase the oxidizer was $42,000, and the installation cost was $6,000 (ENSR 2004c).

Case Study 2: A natural gas-fueled thermal oxidizer (non-catalytic) was used for one year for an SVE system at an active retail petroleum station in California. The main contaminant in the SVE off-gas was gasoline. The specification for the oxidizer included a capacity rating of 300 scfm, a combustion chamber process temperature of 1,460 °F and no heat recovery (no heat exchanger). The cost to purchase the oxidizer was $32,000, and the installation cost was $8,000. The salvage value of the oxidizer after 1 year was about half its original purchase price (ENSR 2004c).

Case Study 3: A natural gas-fueled Cat-Ox system was installed to treat PCE vapors from an SVE system. The design flow rate was 500 scfm. A polyvinyl chloride scrubber was included to treat acid gases from the oxidizer, and there was no heat recovery system. The purchase price was approximately $250,000, including the scrubber. The DRE for the system was increased from 91 percent at the start to 99 percent over the first 7 months by adding additional ceramic heat recovery elements, effectively increasing the reaction temperature without increasing utility fuel consumption (ENSR 2004c).

3.1.7.2 Operating Cost

Operating cost is the cost to implement the system once it is installed. Key variables that influence operating cost include the type, price, and amount of energy required (most common are electric, propane, and natural gas); the extent of safety systems incorporated into the thermal treatment unit (which can, for example, influence the amount of energy required if off-gas stream dilution is required for safety reasons); the level of O&M required; and, for Cat-Ox systems, the cost of maintaining, disposing of, and replacing catalyst. It is important to consider operating costs during SVE off-gas

treatment analysis and selection because these are often the predominant costs over the lifetime of the SVE application.

Typically, the annual energy cost for a Cat-Ox system operating at 100 to 200 scfm ranges from $20 to $40 per scfm for natural gas- or propane-fired systems and from $50 to $100 per scfm for electrically heated systems. Natural gas costs to run a 100-scfm oxidizer will generally range from $2,000 to $4,000 per year, and the energy costs for the same system using electricity for supplemental heat would cost $5,000 to $10,000 per year. For gasoline and petroleum compounds, higher contaminant concentrations would result in lower fuel use and therefore lower annual operating costs (ENSR 2004c).

Energy costs can also be expressed on a daily basis. Typical daily energy costs for a Cat-Ox system alone operating at 100 to 200 scfm may range from $8 to $15 per day (for natural gas or propane-fired systems) and $20 to $40 per day (for electrically heated systems). A 100-scfm oxidizer operating for 250 days per year will therefore generally entail $2,000 to $5,000 of annual energy costs, depending on whether natural gas or electricity is used for supplemental fuel (ENSR 2004c). In addition, energy costs will fluctuate with market conditions.

The case studies summarized below provide some insight into the operating costs for site-specific site conditions.

For Case Study 1 discussed in Section 3.1.7.1 above, the typical off-gas flow rate was 250 scfm, with a maximum contaminant rate of 22 pounds per day (260 ppmv toluene). The remediation system ran approximately 70 percent of any year because of seasonal high water tables and winter weather. Electric utility rates were 6.5 cents per kilowatt-hour (not including monthly service charges). A total mass of 10,000 pounds of contaminant was destroyed over the life of the remediation project. The daily electrical cost for running the oxidizer was between $35 per day for near-zero concentrations in the off-gas to $25 per day for the highest concentrations of contaminants in the off-gas. The total electricity cost for the oxidizer over 5 years was $42,000 (ENSR 2004c).

For Case Study 2 discussed in Section 3.1.7.1 above, the typical extracted flow from the subsurface was 230 scfm, with a maximum contaminant extraction rate of 130 pounds per day (1,600 ppmv) for several weeks. One year later, the concentrations fell below 10 pounds per day, at which time the oxidizer was replaced with an activated carbon system. During the year of operation, the oxidizer destroyed 16,000 pounds of gasoline vapor. The fuel cost for the oxidizer over the year was $48,000, or an average cost of approximately $130 per day. If the oxidizer had used electricity for heating the off-gas, the average daily cost would have been $350 per day (at an electricity cost of 6.5 cents per kilowatt-hour) (ENSR 2004c).

For Case Study 3 discussed in Section 3.1.7.1 above, natural gas consumption was approximately $190 per day ($69,000 per year) at an equivalent fuel cost of 6.5 cents per kilowatt-hour (ENSR 2004c).

3.1.8 Developmental Status

Thermal oxidation is a well established, effective, and frequently cost-competitive treatment technology for SVE off-gases. Research and development for thermal oxidation are primarily focused on technology refinements.

There are many vendors of thermal oxidation systems, although not all vendors supply systems for use in SVE off-gas treatment. An example of a Web site that contains information on treatment technology vendors is http://www.cluin.org/vendor.

Additional information and case studies are also available on the FRTR Web site at the following address, http://www.frtr.gov/matrix2/section3/sec3_int.html.

Often the vendors differ in the ancillary equipment offered in a package (for example, heat exchangers, concentrators, post-oxidation treatment systems, and control systems). For SVE applications, portability is a key factor, and packages on skids and trailers are readily available.

3.2 Internal Combustion Engines

The ICE is a thermal treatment technology used to treat SVE off-gases extracted from petroleum-contaminated sites. ICEs are most effective in controlling emissions when high VOC concentrations are present in the SVE off-gas. These systems are primarily used for tank degassing operations in the initial stage of SVE operation and at gas station sites with substantial amounts of "floating" or residual NAPLs present in unsaturated soil.

The use of an ICE to treat contaminated off-gases can provide site-specific advantages. The contaminated off-gas stream is mixed in the carburetor of the engine with air and, if necessary, additional fuel, which is then combusted normally in the engine. The advantages of using an ICE for destruction of VOCs in contaminated off-gas streams include simplicity of operation, production of useful mechanical energy from the engine that can be used to extract the vapors from the wells (no additional blower or pump needed), relatively high DREs, and the ability to operate at very high influent conditions throughout the explosive range of the contaminants. Numerous standard fuels, including natural gas and propane, can provide the auxiliary fuel used in the engine. This technology is normally not used to treat chlorinated VOC compounds unless they are co-mingled with petroleum VOCs. The commercial vendor Remediation Services, International (RSI, formerly VR Systems Inc.), estimates that 200 to 300 ICE systems are currently being used to treat SVE off-gases (ENSR 2004a). A survey of Superfund sites from 1982 through 2002 shows that thermal treatment using ICE technology was selected for SVE off-gas treatment in only 1 percent of more than 170 sites listed with off-gas treatment (U.S. EPA 2004).

3.2.1 Technology Description

Currently, RSI is the only commercial vendor of ICE remediation equipment. This company manufactures three system sizes to handle SVE off-gas flow rates from 65 to 500 cubic feet per minute (cfm) and to produce vacuums of up to 18 inches of mercury. Figure 3-6 shows a picture of a representative ICE system.

The systems manufactured by RSI are Ford® gasoline-powered engines. Hydrocarbon vapors extracted from the subsurface by SVE are combusted as fuel to run the ICE. The ICE provides a method for treating SVE off-gases and also can generate the vacuum required for vapor extraction from the subsurface; however, the achievable vacuum may not be sufficient for all applications. The exhaust gases from the ICE can be passed through a standard automobile catalytic converter for complete oxidation or activated carbon before discharge to the atmosphere. Depending on the concentration and BTU value of the influent off-gas stream, supplemental fuel such as propane or natural gas may be used to maintain smooth operation of the engine because hydrocarbon concentrations may fluctuate during SVE system operation (RSI 2005).

Figure 3-6. Internal Combustion Engine Remediation System

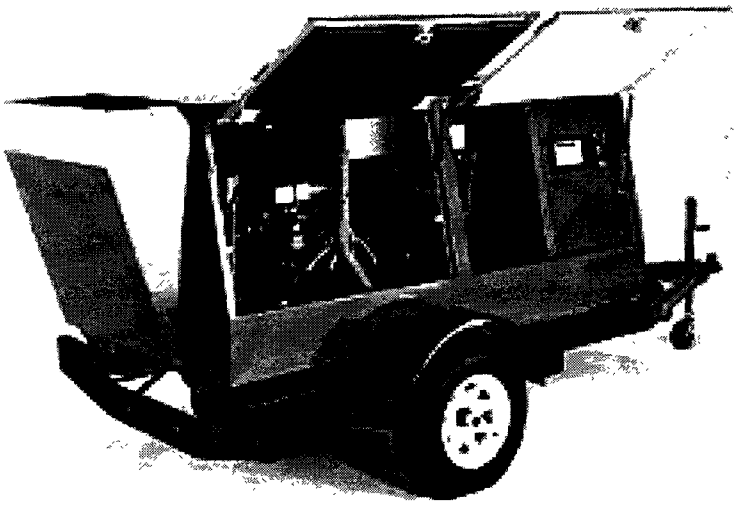

Source: RSI 2005

3.2.2 Applicability

The main factors in determining the applicability of ICE for a particular site are the contaminant's chemical characteristics, the anticipated influent off-gas concentration, and the permeability of the soil being treated. ICE systems are used only to treat non-chlorinated VOCs and are becoming more common at MPE sites where free-product recovery is being conducted. ICE is most effective at

treating high concentrations of VOCs in off-gases (typically 3,000 ppmv or greater). Off-gas with low contaminant concentrations (less than 1,000 ppmv) may not be suited for ICE technology.

The combustion of halogenated VOCs produces corrosive gases that can destroy engine components and the catalytic converter. Most ICE systems can handle influent vapor concentrations well above the LEL (for example, about 1 percent for gasoline in air) and even approaching the upper explosive limit (UEL) (for example, about 7 or 8 percent for gasoline in air). If the sites soils have very low permeability (an intrinsic permeability less than 10^{-10} square centimeters), then the 18 inches of mercury vacuum provided by the ICE intake may not be sufficient for SVE operation; however, the ICE can generate power for a separate, high-vacuum SVE blower to treat lower permeability soils and still provide treatment of the extracted vapors (RSI 2005). ICE units are self-contained, requiring no outside power source. This feature is particularly useful in areas where electric power is not readily or economically available.

3.2.3 Limitations

As previously discussed, ICEs are not capable of treating halogenated VOCs. Other limitations are listed below (AFCEE 1998; Archabal and Downey 1994).

- Relative humidity should be less than 95 percent. High humidity vapors may condense following a decrease in temperature or an increase in pressure. Condensation can reduce the efficiency of off-gas treatment and degrade system components. An air-water separator can be added to minimize condensation.
- ICEs often have limited warranties. A demonstration project by the Air Force Center for Environmental Excellence (AFCEE) found that an ICE used for SVE off-gas treatment can last 15,000 hours with factory-recommended maintenance (equivalent to 1.7 years of continuous operation) (AFCEE 1998). ICEs can be rebuilt as necessary.
- ICE systems can generate nuisance noise conditions if operated near residential areas. (The nuisance can be mitigated with noise suppression insulation and privacy fences.)
- ICE units are complex systems that require skilled technicians to maintain, and as ICE units age, more intensive maintenance is required.

3.2.4 Performance

ICEs can effectively treat relatively high concentrations of non-chlorinated VOCs, achieving DREs generally between 90 and 98 percent (USACE 2002); however, they have been reported to achieve greater than 99 percent DRE for petroleum hydrocarbon vapors given proper air-to-fuel ratios (Archabal and Downey 1994). If the air-to-fuel ratio is not correct (for example, if the oxygen or hydrocarbon content of the SVE off-gas changes substantially), the DRE drops accordingly. ICE systems are most cost-effective when treating vapor streams with high VOC concentrations. Influent

concentrations of 30,000 to 40,000 ppmv are usually sufficient to maintain smooth system operation without requiring supplemental fuel.

Since 1993, ICE technology has been tested at more than 25 U.S. Air Force Base sites. Each of these systems was supplied by RSI. At Patrick Air Force Base (AFB) in Florida, an ICE was used to treat gasoline vapors and achieved greater than 99 percent DRE for BTEX compounds and over 96 percent DRE for total volatile hydrocarbons (AFCEE 1998; Archabal and Downey 1994). The ICEs operated at three AFB sites in Arizona and one AFB site in Washington, DC, achieved DREs of over 99 percent for vapor streams containing both gasoline and JP-4 constituents (Archabal and others 1997a and b).

3.2.5 Engineering Considerations

RSI's ICE systems are designed as fully automated systems using data loggers to monitor and control system performance. The ICE operating parameters that are monitored regularly by the data logger include oil pressure and temperature, coolant temperature, exhaust temperature, percent oxygen in the exhaust, extraction flow rate, applied vacuum, air-to-fuel ratio, supplemental fuel consumption, and engine operating time. Adjustments of the air-to-fuel ratio and supplemental fuel input rate can be made automatically by the on-board computer to maintain acceptable DREs (Archabal and Downey 1994).

ICEs require routine maintenance based on hours of engine operation (similar to automobile engines). Long-term ICE maintenance includes battery and catalytic converter replacement every 5,000 to 10,000 hours of operation (Archabal and others 1997a and b; Parker 1992). Also, complex maintenance may be required to maintain the proper air-to-fuel ratio, and to troubleshoot the on-board computer or data logger when excessive heat, dust, or engine vibrations are present.

RSI offers several enhancements to its ICE units, including a generator module that can produce up to 25 kilowatts of power per engine, a load module to provide backpressure and increase VOC DRE, and integrated extraction/treatment systems such as vacuum stripping and MPE systems.

3.2.6 Residuals Management

With the exception of lubricant oils and coolants (which are recyclable), no major ancillary waste streams requiring further treatment or disposal are associated with the ICE technology. As with thermal oxidizers, most of the contaminants present in the influent off-gas and the supplemental fuel are combusted in the ICE. Any remaining hydrocarbons in the ICE exhaust are oxidized using a standard catalytic converter.

Combustion byproducts such as CO, NO_x, and SO_x can be generated in an ICE as in a thermal oxidizer; however, these compounds are not typically a problem for SVE off-gas treatment using ICE. If an ICE is operating at 99 percent DRE, then the production of byproducts may not be an issue;

however, because ICEs require monitoring and maintenance to remain properly "tuned" (as with a car engine), the formation of these byproducts may increase between maintenance periods.

3.2.7 Cost and Economics

The capital cost of an ICE is most dependent on the flow volume it is designed to handle. The overall cost to treat hydrocarbon vapors depends on factors such as the cost and amount of auxiliary fuel required.

ICE appears to be a cost-effective off-gas treatment technology under suitable site conditions. In general, the ICE technology becomes more cost-effective with higher influent VOC concentrations. The AFCEE (1998) report suggests that the cost for SVE off-gas treatment for a 100-scfm extraction rate and 1,000 ppmv of average total vapor hydrocarbon content is about the same as the cost for thermal oxidation, about 20 percent more than for a Cat-Ox system, and about 40 percent of the cost of treatment using granular activated carbon (GAC). At a 5,000 ppmv average total hydrocarbon content, costs for ICE and thermal or Cat-Ox systems for the 100-scfm rate are about the same and about 10 percent of the cost of GAC treatment (depending on the cost of fuel for the different thermal treatment systems).

3.2.8 Developmental Status

ICE systems are commercially available for treating non-chlorinated site remediation off-gases. Based on available data, ICE appears to be a cost-effective technology. This cost-effectiveness is likely due to the fact that the system provides a method for treating remediation off-gases and also generates the vacuum required for SVE system operation.

4.0 ADSORPTION TECHNOLOGIES

Adsorption is a traditional technological approach for treating off-gases containing VOCs, both in industrial processes and soil remediation applications. Of SVE projects at Superfund sites that had data available about off-gas treatment, 70 percent used adsorption (U.S. EPA 2004). The adsorbent most often used to treat SVE off-gas is activated carbon. Other adsorbents include alumino-silicate "zeolites" and synthetic polymers. All three classes of materials treat the contaminated waste stream by capturing and removing the VOCs through physical adsorption.

In adsorption, the pollutant is collected on the surface (primarily the internal surface) of a granule, bead, or crystal of sorbent medium. The adsorbed compound is held physically and somewhat loosely, and can be released (desorbed) relatively easily by either heat or vacuum processes.

Each material has a different adsorption capacity referred to as the "adsorption isotherm." This capacity is measured in pounds of pollutant adsorbed per pound of adsorbent at a given temperature. This isotherm is a function of the contaminant concentration (or partial pressure) in the vapor, the temperature, the total ambient pressure, and the adsorptive areas of the medium that the VOCs can reach. Because carbon, zeolites, and polymers each have different pore sizes and surface areas vary, the adsorption isotherm is different for each material and each type of pollutant. These factors dictate the amount of contaminant that each sorbent can adsorb. Selection of an appropriate adsorbent material is primarily a function of the contaminant to be adsorbed, but the adsorption capacity of certain sorbents may be reduced by the relative humidity of the gas stream.

Carbon was the first material observed to have a large surface area and the property of decreasing a chemical's ability to escape the closer it approaches the carbon's internal surface area. Zeolite and polymer adsorbents have more recently been found to also have large internal surface areas with this property. Each class of adsorbent material has advantages for particular applications. Activated carbon has a long history of usage and hundreds of case studies, while other sorbents have been applied to SVE treatment system off-gases only more recently. Additional information about adsorption technologies can be found in U.S. EPA's "Technical Bulletin: Choosing an Adsorption System for VOC: Carbon, Zeolite, or Polymers" (U.S. EPA 1999) and USACE's "Engineering and Design – Adsorption Design Guide" (USACE 2001).

4.1 Activated Carbon Adsorption

Activated carbon is an excellent adsorption medium because of its large specific surface area and micropores (smaller than the smallest pores manufactured in polymer adsorbents) of 2 to 500 angstroms (Å) (1 angstrom = 1×10^{-10} meter). Activated carbon typically has surface areas ranging from 800 to 1,400 square meters per gram (Alley 1998). In vapor-phase activated carbon adsorption, contaminants are removed from a vapor stream by physical adsorption onto the surface of "activated" carbon pellets, beads, granules, or powder. Because the granular form of activated carbon is

generally used as the adsorbent, the systems are referred to as GAC systems. Before use, the carbon is activated by high-temperature steam pyrolysis in an oxygen-limited environment of coal, wood, bark, coconut husks, and other materials to remove all volatile material as a gas or vapor and to leave only the carbon. Various starting materials produce GAC with slightly different properties to address specific applications. For example, coconut-based carbons generally perform better at higher humidity than coal-based carbons. Following activation, carbon may be partially oxidized to enlarge its pores prior to use.

4.1.1 Technology Description

The treatment process of carbon adsorption is relatively simple. The off-gas from an SVE system (or the vapor emissions of an industrial process) is blown or sucked by blowers and vacuum pumps through the activated carbon. The vapor-phase contaminants flow through a packed bed or vessel containing activated carbon and are adsorbed onto the surface of the carbon until the concentration of VOCs in the effluent from the carbon bed exceeds acceptable levels. Most adsorption systems consist of one or more vessels connected in series or in parallel. These vessels can be cartridges, canisters, drums, tanks, or bins. Typical equipment sizes include 55-gallon drums containing 150 pounds of carbon; 8-foot-diameter containers with approximately 4,000 pounds of carbon; and 12-foot-diameter containers or larger containing more than 10,000 pounds of carbon. Activated carbon typically sorbs 10 to 20 percent of its weight; however, when relative humidity is above 50 percent, this capacity is reduced by sorption of water.

The adsorbent system employs fixed, moving, or fluidized beds. In fixed-bed systems, the adsorbent is contained within a square or cylindrical chamber, and the contaminated vapor is directed vertically downward or horizontally through the chamber. Fixed-bed adsorption systems are the most common for SVE off-gas treatment. In moving-bed systems, the adsorbent is contained between two coaxial rotating cylinders, and the vapor flows between the two cylinders. As the cylinders rotate, part of the adsorbent is regenerated, while the rest continues to remove contaminants from the vapor stream. In fluidized-bed systems, the contaminated vapor flows upward through the adsorbent vessel. As the adsorbent becomes saturated, it slowly migrates downward in the vessel to a surge bin, where it is passed to a regeneration chamber and finally to the top of the adsorbent chamber for reuse. Figure 4-1 shows a typical regenerable system.

Activated carbon may be regenerated once it has reached its adsorption capacity. Some types of carbon systems are non-regenerable (for example, carbon canisters), and others are regenerable (for example, fixed beds). Once saturated with sorbed compounds, the carbon in regenerable systems is treated to remove the adsorbed chemicals and allow the carbon to be used again. Regeneration is performed by changing the conditions in the bed to desorb the contaminants from the carbon. This process is achieved by increasing the temperature using hot air or steam, decreasing the partial pressure, or introducing a stronger adsorbed material to displace the VOCs (Rafson 1998).

Regenerable carbon can be regenerated in place (generally by steam or hot air regeneration) or at an off-site regeneration facility, or it can be disposed when spent. In on-site regenerable systems, one or more carbon vessels are typically kept in operation while others are regenerated. Systems using steam for on-site regeneration typically include a boiler, a feed water supply and treatment system, a condenser, a separator, storage for the recovered contaminants (either a tank or drums), and a source of drying air, such as process gas exiting an on-line adsorber or compressor. Systems using hot gas for on-site regeneration include gas storage (either in cylinders or tanks) or on-site gas generators, heaters for the gas, condensers, and contaminant storage equipment. A separator is not usually required for gas systems because the condensate is a single organic phase, but a fan or pump for the cooling fluid may be needed. Regeneration may result in some contaminants remaining adsorbed and unaltered within the carbon. The adsorption capacity of the carbon will likely be reduced by these residual contaminants. The number of times carbon can be regenerated is based on these residual contaminants, and when the adsorption capacity becomes too low, the carbon requires replacement (USACE 2001).

Figure 4-1. Typical Regenerable Activated Carbon System

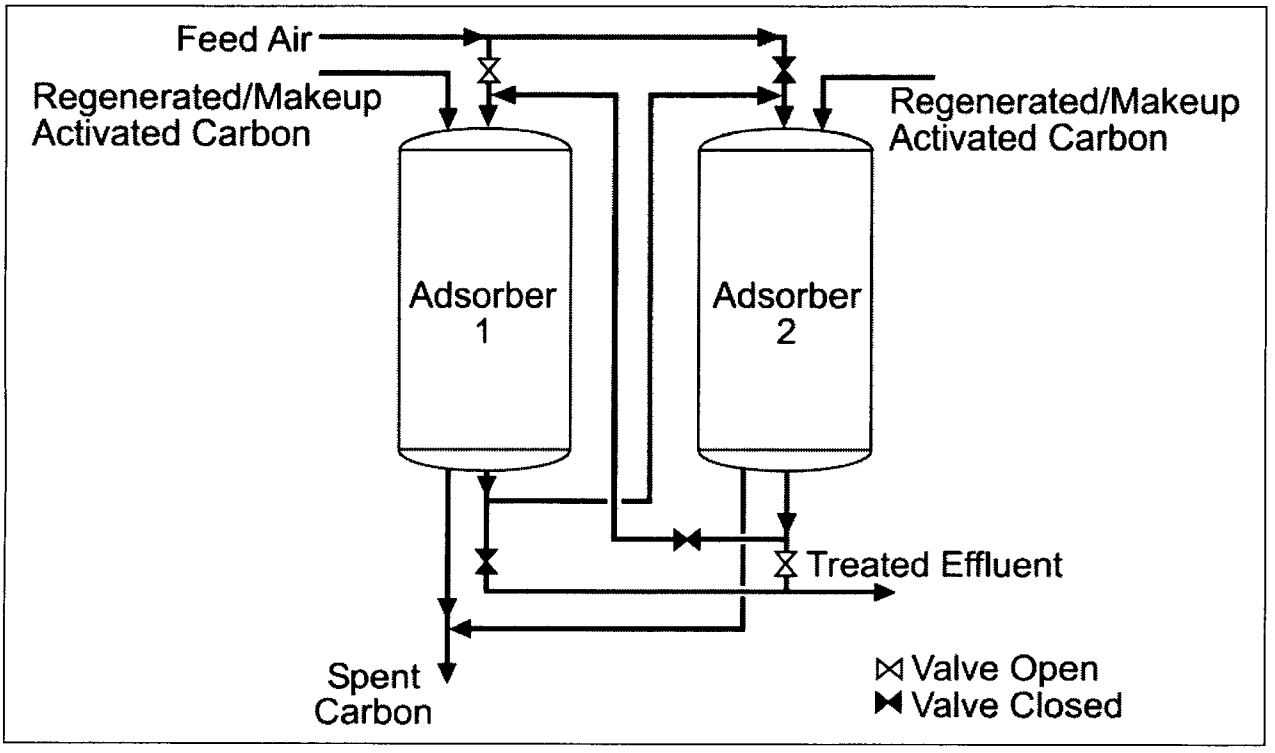

Source: FRTR 2004

4.1.2 Applicability

GAC systems are robust in that they are not sensitive to rapid changes in extracted vapor concentration. Another attribute of GAC systems is that they can be used to treat a wide range of VOCs, although some highly polar and/or volatile VOCs (such as vinyl chloride) and VOCs having smaller molecules (such as methanol and formaldehyde) do not adsorb well. Thus, GAC systems can be used to capture and control most VOC and chlorinated VOC emissions from both site soil remediation and industrial processes. GAC can also be impregnated to remove additional contaminants, such as hydrogen sulfide, mercury, and ammonia (Calgon 2005; General Carbon Corporation 2005). GAC systems are more efficient in removing non-polar organics than either zeolite or synthetic polymer systems.

For high flow-rate industrial applications, GAC systems may be used with other technologies, such as condensation or thermal treatment. In some industrial applications, GAC systems act as a concentrator to make condensation or thermal treatment more cost-effective. The most common use of activated carbon in conjunction with another technology is as a "polishing" process. That is, GAC is often used after less effective off-gas treatment technologies such as biofiltration or condensation to achieve VOC discharge limits.

The relatively low initial capital cost of carbon adsorption systems makes them particularly attractive for short-term SVE off-gas treatment applications where dilute concentrations of VOCs are present; however, carbon usage increases as the concentration of the vapor to be treated or flow rate of the off-gas increases (increasing O&M costs).

A carbon bed will adsorb more VOCs at high vapor concentration than at low concentration; however, sustained high vapor concentration will result in faster carbon "breakthrough" (resulting in unacceptable VOC concentrations in the effluent). Adsorption systems are most effective (in terms of both cost and waste management) in remediation projects involving dilute contaminant concentrations (less than 100 ppmv) and moderate flow rates. These relatively low concentrations may be difficult or uneconomical to meet using another technology. Adsorption is also common when expected VOC emissions are in the range of 500 to 5,000 ppmv initially but are not expected to remain high for long periods (Govind and others 1994). For higher concentrations or extended periods of high concentrations, thermal treatment (see Section 3.0), membrane separators (see Section 6.3), and condensers (see Section 6.4.2) may be more economically feasible.

4.1.3 Limitations

In general, GAC is a very robust and cost-effective vapor treatment technology; therefore, it is routinely used for vapor treatment applications, particularly SVE off-gas treatment. There are, however, a variety of limitations to the use of GAC for SVE off-gas treatment that are important considerations.

The main limitation of this technology is the high operating costs associated with adsorbent replacement or regeneration when high influent concentrations are present. The use of more capital-intensive, on-site regenerative systems can help minimize these costs. Carbon should be replaced every 6 months to 5 years, depending on the frequency of regeneration and temperatures at which the system operates (U.S. EPA 1999).

Carbon is neither fully hydrophobic nor hydrophilic and has an affinity for both polar and non-polar molecules. Because of its affinity for polar molecules, water is easily adsorbed by activated carbon. This factor causes high-humidity off-gas streams to diminish carbon's adsorptive ability because the carbon will preferentially adsorb polar water molecules and a layer of water will form on the surface of the carbon. This water film hinders the natural attraction forces of the VOCs to carbon. When the contaminated vapor has a relative humidity of greater than 50 percent, zeolite or synthetic polymers may be considered as more appropriate adsorbents because they have less affinity for water than activated carbon. However, these materials may not be as cost-effective as adding dehumidification equipment.

Temperatures above 100 °F in gas streams also can significantly reduce carbon's adsorption capacity. Activated carbon generally is not used with thermal treatment technologies because of the inherent high efficiencies of thermal units and their associated high-temperature effluent.

Carbon usage increases as the concentration of contaminants in the vapor increases. The associated cost of carbon disposal or regeneration also increases as a function of the influent vapor concentration; therefore, other vapor treatment alternatives may be more cost-competitive at the higher vapor concentrations typically encountered during the initial phases of SVE system operation. Adsorption systems can be designed to handle high flow rates and high vapor concentrations, but the costs associated with frequent carbon replacement or regeneration may make the use of other off-gas treatment technologies (such as thermal oxidation) more attractive.

Activated carbon is not effective for VOCs with high polarity, such as alcohols and organic acids, or high vapor-pressure (highly volatile) compounds, such as vinyl chloride, methyl tert-butyl ether (MTBE), or methylene chloride.

When treating VOCs that are monomers for plastics (such as styrene), the system design needs to consider the possibility of polymerization reactions on the GAC bed. This situation may result in bridging and clumps in the bed. Polymerization reactions generally require heat input; therefore, this factor is of particular concern with on-site regenerable GAC systems.

Another concern is that certain chemicals, once adsorbed, can cause carbon bed fires. Most adsorption of VOCs by activated carbon is exothermic (energy-releasing). Because the heat of adsorption is especially high with ketones (such as MEK and MIBK), aldehydes, and similar organic compounds (Naujokas 1985), the heat released during sorption can cause carbon to auto-ignite and

produce a bed fire. Therefore, special fire protection measures may be needed when treating these compounds (USACE 2001).

Effluent streams can be treated until the concentrations (in gas or the adsorption bed) reach 25 percent of the VOC's LEL. At these concentrations, fire safety issues arise and the off-gas must be diluted with ambient (clean) air. For most VOCs, 25 percent of the LEL would be in the range of 2,500 to 10,000 ppmv (see Table 3-1).

4.1.4 Performance

Well-designed adsorber systems should achieve 95 to 98 percent DREs at input concentrations of 500 to 2,000 ppmv (U.S. EPA 1999). At lower concentrations, DREs are generally greater than 98 percent. These levels of removal will be achieved until the adsorption capacity of the sorbent bed is reached. The carbon adsorption capacity is defined as the mass of contaminant that can be adsorbed onto a given mass of carbon until breakthrough occurs.

There is no theoretical method that consistently and accurately predicts the performance of adsorption systems (Rafson 1998). Carbon adsorption is based on the principle of equilibrium partitioning from the vapor phase to the surface of the carbon. The carbon adsorption capacity is strongly influenced by the contaminant concentration in the process stream and the temperature at which the adsorption is taking place. In general, the higher the concentration of contaminant in the vapor stream, the higher the contaminant adsorption capacity of the carbon. Conversely, the higher the temperature, the lower the adsorption capacity.

Most carbon manufacturers have empirical adsorption isotherm data (adsorption capacity as a function of concentration at a constant temperature) used to predict when the adsorption capacity of a particular adsorbent will be reached for specific contaminants at varying influent concentrations.

As discussed above, the performance of a GAC system in particular can be greatly influenced by the relative humidity of the vapor stream (FRTR 2004). Thus, a moist, hot regenerated carbon bed will not remove VOCs as effectively as cool dry carbon. Steam regenerable carbon systems typically include a drying cycle using clean ambient air for regeneration. Moisture in the GAC bed can also promote biological growth on the carbon, which can reduce the surface area in the bed available for sorption and provide resistance to air flow through the bed. High particulate loading from influent vapor can also reduce flow through the bed.

4.1.5 Engineering Considerations

As described in Section 4.1.4, the time until carbon breakthrough occurs may be short for several reasons, and frequent carbon replacement or regeneration may be required (for example, when high influent vapor concentrations, poorly sorptive compounds [such as MTBE], or very high humidity vapor

are present). Two or more GAC beds are typically aligned in series to prevent contaminant emissions from exceeding local regulatory requirements if breakthrough in the primary treatment vessel occurs. Most fixed-bed adsorption systems consist of one or more adsorbent bed vessels connected in series or in parallel. Series arrangements permit more contact time for the contaminant and the adsorbent and allow breakthrough monitoring of the effluent of the primary vessel without risking contaminant emissions to the atmosphere. Parallel arrangements accommodate higher flow rates and increase the overall adsorption capacity of the system. For multi-vessel systems, flexible piping is generally used to allow easy interchange between parallel or series configurations.

Adsorption isotherm data are available from manufacturers for many compounds, and these should be consulted during system design. For special circumstances, batch isotherm tests can be used to determine system size and carbon usage requirements.

Linear bed velocities for carbon adsorption typically range from 8 to 100 feet per minute (fpm), although depending on the system, velocities as high as 200 fpm have been achieved. Residence times are typically a few seconds, but they can be up to hundreds of minutes (U.S. EPA 1991b).

High temperature and relative humidity in the process stream can reduce the adsorption capacity of the system; however, short-term fluctuations in temperature and moisture will not result in significant system upsets. Moisture separators are typically used to remove entrained water droplets prior to carbon treatment. Although higher temperatures can also reduce adsorption capacity, this effect is less severe; therefore, designs sometimes incorporate a small reheater to reduce incoming humidity. More efficient humidity control can be accomplished by cooling prior to the moisture separator followed by reheating to a lower temperature. For SVE applications, particulate concentrations are typically not of concern, so particle filtration "upstream" of the GAC units is not common. In addition, bed plugging or masking from particulate matter or biological growth can also diminish the adsorption capacity by reducing the carbon surface area available for adsorption (Rafson 1998).

A fire hazard can also exist during the virgin operating cycle because there is little moisture present on the carbon to act as a heat sink and because more contaminants are likely to be adsorbed during this cycle than any other cycle. This situation occurs during the initial operation of an SVE system when VOC concentrations are high. Because the sorption reaction is exothermic (as described in Section 4.1.3), the adsorption of relatively large amounts of VOCs on dry virgin carbon can release enough energy to raise the temperature of the vapor from 100 to over 250 °F, which can melt plastic piping at the outlet of the adsorber. This heat can also cause an explosion or fire hazard, especially if the vapors contain flammable or combustible compounds (Rafson 1998). This situation is especially an issue when ketones, aldehydes, and similar organic compounds are treated. Most carbon bed fires occur when units stay stagnant for prolonged periods of time. To minimize the potential for these fires, one or more of the following can be conducted: (1) lowering the temperature by convectional and evaporational cooling, (2) maintaining flow at more than 2 fpm, and (3) removing oxygen from the system using nitrogen or water (Naujokas 1985).

Carbon beds requiring regeneration need to be regenerated in cycles of adsorption and desorption until they achieve a stable amount of adsorption capacity and desorption. Because there is equilibrium between the captured and escaping molecules, carbon (and some polymers) continue to recapture molecules in micropores during regeneration; therefore, after regeneration, carbon is capable of adsorbing only 50 percent of the amount adsorbed by the virgin material due to these residual contaminants (U.S. EPA 1999). The number of times carbon can be regenerated is based on these residual contaminants, and when the adsorption capacity becomes too low, the carbon will need to be replaced. This issue must be considered when sizing an adsorbent bed (USACE 2001).

The traditional carbon adsorber regeneration system uses steam to raise the temperature of the adsorbed VOCs and boil them from the carbon. This process is known as "thermal swing regeneration" because the temperature usually swings during the process from ambient temperatures to 250 to 350 °F. After desorption, cooling air blown into the carbon bed in place of the steam helps to dry the bed and remove any excess water that may inhibit future adsorption. If air flow and concentration vary, a sensor indicates when regeneration has been accomplished. Thermal regeneration has also been performed using other methods such as microwaves and heated nitrogen. Purifics ES Inc. also has a patent pending on a technology called Phase Extraction Technology, which uses heat to regenerate activated carbon filter beds to treat VOCs and SVOCs (Purifics 2006).

To enhance solvent recovery from carbon when chemical reuse may be considered and to minimize contamination of the solvent by steam, vacuum regeneration may be used. This process uses a vacuum pump to lower the pressure below the vapor pressure of the VOCs adsorbed, which causes the VOCs to boil off without the use of heat. Sometimes, a purge gas is used to enhance the flow of the VOCs. The VOCs can then be separated from the vacuum flow by condensation, compression, or membrane separation. If the purity of the separated VOCs is too low to make separation practical, they can be destroyed by incineration.

4.1.6 Residuals Management

The carbon from SVE off-gas adsorption treatment systems is most often taken off site for regeneration or disposal. Less commonly, adsorbents can be regenerated on site. During regeneration, the contaminants are thermally desorbed and must be further treated using some other technology (usually incineration). Spent carbon designated for disposal may need to be managed as a hazardous waste (FRTR 2004).

4.1.7 Cost and Economics

The capital cost of a carbon adsorption system is almost directly proportional to the off-gas flow rate and concentration. The total cost of an activated carbon system is generally driven by the amount of carbon used (an O&M cost), which is a function of the amount of time the SVE system is operated. The amount of carbon needed also impacts the capital costs in terms of blower pressure drop, bed

size, and, for on-site regenerable systems, boiler and condenser size. Based on a 20,000-cfm fixed bed system, Rafson (1998) indicates that the purchase price of an activated carbon adsorption system ranges from $20 to $25 per cfm.

Portable canister systems are typically used for SVE off-gas treatment applications and generally have lower purchase costs than permanent, large-scale industrial systems. A typical 180-pound canister costs approximately $600 for the vessel, carbon, and connections, without taxes, freight, or installation. Table 4-1 lists costs for larger sorption systems (RTN 1999a). These costs include initial filling with carbon. The cost range is based on whether virgin or regenerated carbon is initially provided and is consistent with cost estimates provided by other carbon vendors.

Table 4-1. Estimated Capital Cost Range for Vapor-Phase Activated Carbon Treatment Units (Including Carbon)

Canister Size	Diameter (feet)	Capability (cfm)	Capital Cost Range
1,000-pound unit	8	6,000	$6,000 - $7,500
2,000-pound unit	12	8,000	$7,000 - $8,500

Source: RTN 1999a

Calgon reports typical installation costs of $3,200 and $4,600 for the 1,000- and 2,000-pound units, respectively. Activated carbon replacement cost ranges from $0.85 to $2.00 per pound, depending on mesh size, activity preparation, and volume, with a median price of $1.50 per pound. Reactivated carbon replacement costs per pound would be approximately 25 percent less. Annual maintenance costs range from 3 to 10 percent of the installed capital costs (RTN 1999a).

4.1.8 Developmental Status

Activated carbon adsorption is a mature, demonstrated, established technology and is frequently part of remedial designs. This readily available technology is offered by many vendors.

4.2 Zeolite Adsorption

In a zeolite adsorption treatment system, hydrophobic zeolite packing is the adsorption medium instead of activated carbon. The process components of a zeolite adsorption system are similar to those of a GAC adsorption system in that contaminants are captured and removed from a vapor stream through physical adsorption.

4.2.1 Technology Description

Zeolites act like a reverse filter to capture small molecules while letting larger molecules pass through. They are sometimes referred to as "molecular sieves" because of their crystalline structures with

uniform and regularly spaced pores (U.S. EPA 1998). The pore sizes of zeolites can range from approximately 8 Å (Munters Zeol) to 13 Å (Alley 1998). Zeolite crystals also have specific surface areas of approximately 1,200 square meters per gram, which is comparable to the surface area of activated carbon (Alley 1998). Zeolites are also capable of selective ion exchange.

Natural zeolites are hydrophilic, anhydrous, aluminosilicate minerals found in volcanic rock and ancient seabed sedimentary formations. Approximately 40 natural zeolites have been identified (U.S. EPA 1998). Synthetic zeolites may be either hydrophilic or hydrophobic and are manufactured to have specific properties. For example, synthetic zeolites can be made hydrophobic to provide them with an affinity for non-polar compounds such as many VOCs or can be chemically-enhanced to target specific contaminants. Zeolites (both natural and synthetic) are packaged in a variety of container sizes for vapor stream treatment of SVE off-gases, or they can be placed into containers at the point of use. Once the sorbent bed is saturated, the zeolite material can be regenerated and reused. However, the desorbed contaminants must subsequently be disposed of or treated by some other process.

Zeolites may be synthesized to have specific properties. For example, zeolites can be made hydrophobic to provide them with an affinity for non-polar compounds such as many VOCs or can be chemically-enhanced to target specific contaminants. Zeolites (both natural and synthetic) are packaged in a variety of container sizes for vapor stream treatment of SVE off-gases, or they can be placed into containers at the point of use. Once the sorbent bed is saturated, the zeolite material can be regenerated and reused. However, the desorbed contaminants must subsequently be disposed of or treated by some other process.

Because of zeolite's ability to adsorb at high humidity, its resistance to burning, its higher DRE for VOCs at lower concentrations, and its more complete regeneration, zeolites could be more advantageous in certain system applications than activated carbon. Figure 4-2 shows a typical zeolite adsorption system. The system shown includes a zeolite rotary concentrator, two heat exchangers, and an optional catalyst.

4.2.2 Applicability

Zeolite adsorption appears to have limited use in soil and groundwater remediation applications, although it is widely applied in air pollution control technologies for industrial applications. Currently, there are no reported applications of zeolite adsorption to treat SVE off-gases, according to the references used for this report. However, Munters Corporation has a system operating at a U.S. government-owned facility to treat chlorinated vapors generated from a groundwater remediation project (ENSR 2003b).

Figure 4-2. Zeolite Adsorption System

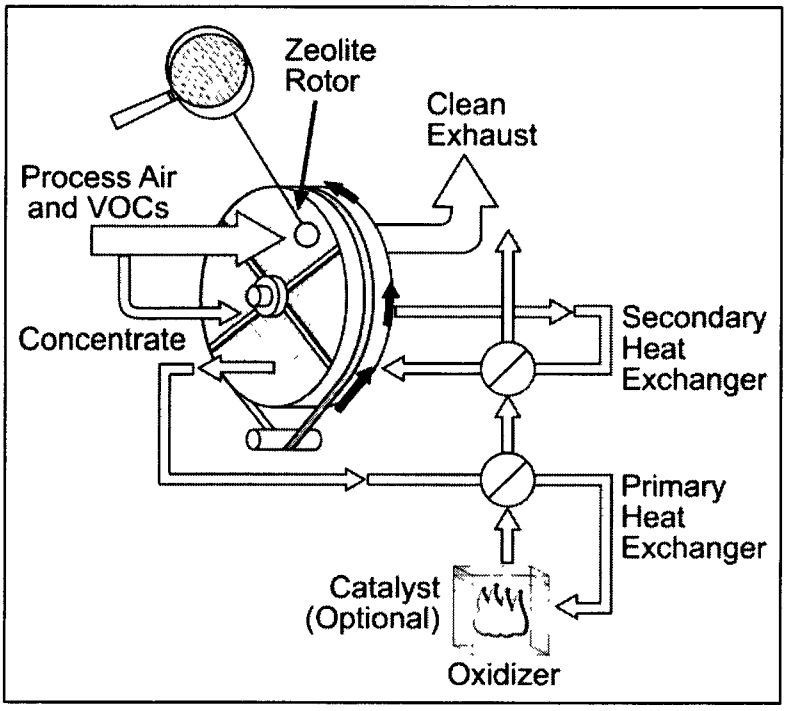

Source: Munters Corporation 2005

Zeolite systems appear to be primarily used in industrial applications as concentrator systems in conjunction with thermal oxidation (U.S. EPA 1995). Inorganic crystalline zeolite is the only hydrophobic adsorbent not damaged by temperatures of up to 1,800 °F (Munters Corporation 2005).

Zeolites can be used to treat vapor streams containing NO_x emissions, most chlorinated VOCs, and non-chlorinated VOCs. According to U.S. EPA (1995), Munters Corporation's hydrophobic zeolites can also be used to effectively treat high boiling-point solvents. Highly polar and volatile VOC degradation products such as vinyl chloride, formaldehyde, sulfur compounds, and alcohols are better adsorbed by hydrophilic zeolites than by activated carbon (U.S. EPA 1995). Hydrophilic zeolites impregnated with potassium permanganate are also effective at removing polar substances such as sulfur compounds, alcohols, vinyl chloride, and formaldehyde.

Current zeolite systems generally treat high-flow and very-low concentration vapor streams less commonly encountered for SVE off-gas treatment applications. This may explain their limited use for SVE off-gas treatment to date. The influent concentration range for 32 Munters Corporation systems reported in U.S. EPA (1995) ranged from 20 to 150 ppmv for industrial influent vapor streams containing petroleum compounds, paint solvents, and plastic fumes. Some of the zeolite adsorption systems identified in U.S. EPA (1995) were stand-alone, fixed-bed systems with flow rates ranging from 3,000 to 30,000 cfm.

An advantage of hydrophobic zeolite adsorption over carbon adsorption systems is that it can be applied to humid vapor streams without adversely affecting the working capacity of the adsorption bed. The zeolite's pore size is determined by its strictly regular crystalline structure, whereas carbon has a broad range of pore sizes. Carbon tends to adsorb large highly volatile organic compounds such as naphthalene, but zeolite does not adsorb large molecules. Highly volatile contaminants will therefore gradually block smaller carbon pores, preventing further adsorption and decreasing carbon's adsorptive capacity. Highly volatile organic compounds are also difficult to desorb. In contrast, the narrow pore size of zeolite does not allow organic molecules to enter the zeolite structure (Munters Corporation 2005).

Zeolite has a greater sorption capacity than carbon because of its more consistent pore size. This uniformity can be particularly important in VOC abatement applications that require a high percentage removal rate from low-concentration inlet streams, such as those commonly associated with SVE applications, at relatively low capital and operating costs (Munters Corporation 2005).

4.2.3 Limitations

Typically, zeolites can adsorb molecules up to approximately 8 Å in diameter such as formaldehyde, methane, acetone, MEK, vinyl chloride, phenol, and styrene; however, certain contaminants tend to polymerize on this adsorbent, complicating the removal and ultimate destruction of the contaminant. Styrene, for example, polymerizes to polystyrene, which has a high boiling point and large molecular weight, making it relatively impossible to desorb without very high temperatures. The use of high temperatures to desorb contaminants requires fuel and leads to higher operating costs for zeolite systems used to treat these types of chemicals.

Zeolite has a non-linear adsorption isotherm relative to vapor pressures for the molecules for which it has an affinity. This non-linearity makes either carbon or polymers the better adsorbent when the vapor pressure (or concentration) is higher.

Zeolites are generally not useful in treating vapor streams with a wide assortment of contaminants because not all contaminants may be removed from the stream. Carbon or synthetic polymer adsorbents are better suited to treat multi-contaminant waste streams because these adsorbents have a wider range of pore sizes. In addition, zeolites allow larger molecules to pass through and the potential exists for large-sized molecules not retained in the zeolite to be discharged to the atmosphere.

4.2.4 Performance

The performance of zeolite adsorption systems is a function of the chemical and physical properties of both the adsorbent and influent. The ability of the zeolite to adsorb certain compounds depends on its adsorption area and whether the pore size of the sieve is large enough to allow the targeted

compounds to pass through. Molecules much larger than 8 Å in diameter are not adsorbed effectively. Typical DREs for zeolite adsorption systems range from 95 to 98 percent at inlet concentrations ranging from 500 to 2,000 ppmv in air. Zeolite adsorption has been shown to reduce VOC inlet concentrations of 400 to 2,000 ppmv to less than 50 ppmv. In some cases, VOC concentrations have been reduced to 20 ppmv (U.S. EPA 1999).

Compared to carbon adsorption, zeolite adsorbers have even higher adsorption capacity at influent concentrations less than 100 ppmv (U.S. EPA 1999). At higher inlet concentrations, the relative adsorption capacity of activated carbon becomes greater compared to zeolites. The adsorption capacity of zeolites is not adversely affected until the relative humidity of the influent streams reaches approximately 90 percent (U.S. EPA 1995). Figures 4-3 and 4-4 compare the relative adsorption capacities of activated carbon and Munters Zeol (a proprietary product) in terms of inlet concentration and relative humidity, respectively.

The effectiveness of zeolite adsorbent is monitored similarly to GAC's effectiveness by comparing influent and effluent concentrations. As with carbon adsorption, there are limitations to total mass loading and as the adsorptive capacity is exhausted, breakthrough occurs, requiring bed change-out or regeneration. Zeolite adsorbents have no particular or unique start-up or steady-state use issues, and the material is reliable if properly applied.

Figure 4-3. Comparison of Inlet Concentration Effects on Adsorption Capacity of Adsorbents

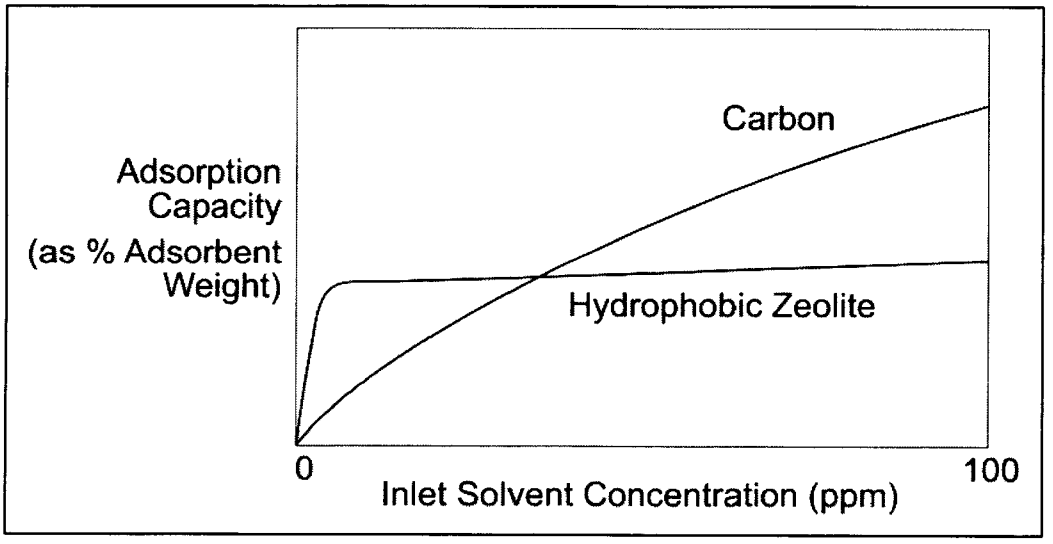

Source: U.S. EPA 1995b
Note:
ppm = Part per million

Figure 4-4. Comparison of Humidity Effects on Adsorption Capacity of Adsorbents

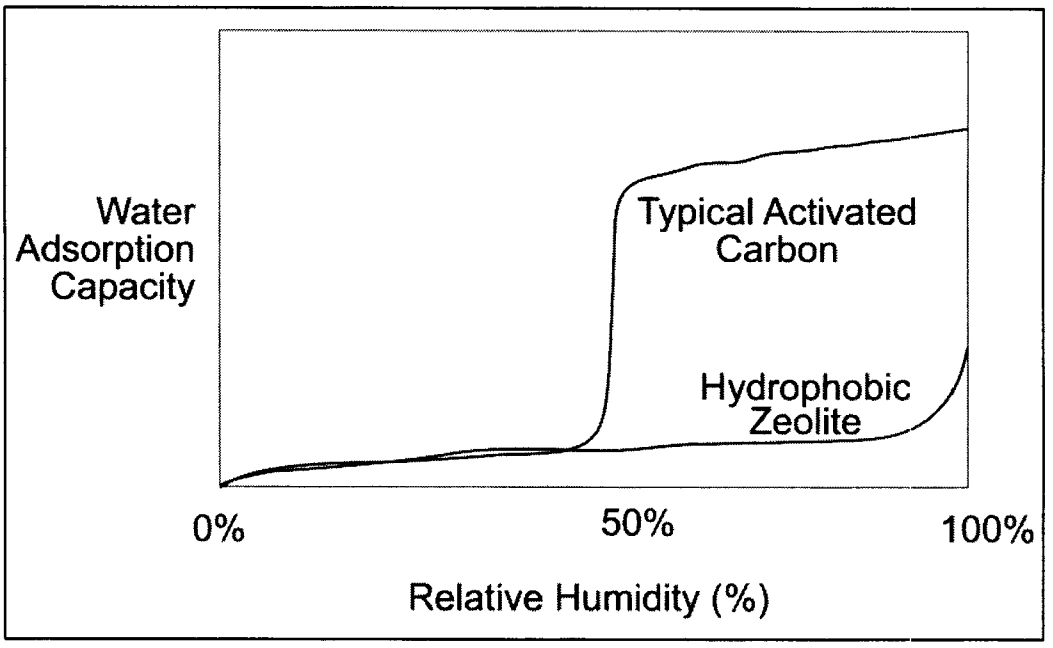

Source: U.S. EPA 1995b

4.2.5 Engineering Considerations

Regeneration of a zeolite consists of heating or evacuating the zeolite to desorb the hydrating water or other material from the adsorption area, similar to carbon regeneration. As with GAC systems, the predicted time to breakthrough of a zeolite adsorbent can be determined using empirical adsorption isotherm equilibrium data, expected or actual system flow rates, and influent concentrations. In choosing zeolites, the effective pore size (sometimes referred to as "window" size) and the effective molecular diameter for each VOC to be removed must be known. It is necessary to accurately match the pore (or window) size with the VOC molecular diameter to ensure that the VOC will be trapped within the bed rather than escape because the pores are too small.

The adsorption capacity or adsorption isotherm (pounds of VOCs adsorbed per pound of adsorbent) is a function of concentration, temperature, area, and pressure. This capacity must be evaluated based on the VOCs, flow rates, and expected treatment duration. The critical temperature and pressure (for polymerization and oxidation) for catalyzing reactions must be known for each VOC and each zeolite to design the system properly and avoid such reactions. The effective bed life or "working capacity" for a zeolite adsorption system is substantially longer than for activated carbon. Zeolites have a more uniform pore size than carbon or polymers and therefore are able to adsorb about 90 percent of the amount of contaminant mass during subsequent regenerations as the virgin material. In fact, zeolite replacement after regeneration occurs very rarely. Zeolite beds can withstand high desorption

temperatures of up to 1,000 °F, which allows for better VOC desorption during regeneration (U.S. EPA 1999). For safety reasons, the VOC level after the vapor stream has been concentrated by zeolite treatment should remain below one-fourth of the LEL for that mixture of compounds.

Compounds not easily adsorbed by activated carbon or zeolite may be target contaminants for chemically-enhanced zeolite treatment. For example, zeolite impregnated with potassium permanganate specifically targets acid gases and low molecular-weight aliphatics such as formaldehyde, acetone, and vinyl chloride. The zeolite acts as a carrier vehicle for the potassium permanganate and provides surface area for the oxidizing reactions to take place between the contaminants and the potassium permanganate. Zeolite is chosen as the substrate over other materials such as sand or activated alumina because of its porous structure, superior crush strength, and lower cost. Six percent of the weight of the final impregnated zeolite material is potassium permanganate. The ultimate density of the impregnated material is 60 pounds per cubic foot, which is approximately twice the density of activated carbon. The higher density of the impregnated zeolite is a factor in the material's longevity because it is less apt to break apart or turn to dust than activated carbon or activated alumina substrates. One manufacturer's field studies show that 70 pounds of impregnated zeolite will remove 1 pound of vinyl chloride from a vapor stream (Hydrosil International 2005).

Potassium permanganate-impregnated zeolite is applied most often for the removal of vinyl chloride from vapor streams. When hydrated, potassium permanganate forms the products potassium hydroxide, manganese tetraoxide, and manganese dioxide. Manganese tetraoxide reacts with vinyl chloride to form potassium chloride and carbon dioxide. The carbon dioxide is released while the potassium chloride resides in the zeolite. For greatest efficiency, vinyl chloride removal systems may have two or three adsorbent beds placed in series. The first is an activated carbon bed that removes most non-polar VOCs from the vapor stream but leaves vinyl chloride unaffected. The vapor stream passes next through a bed of impregnated zeolite, where the vinyl chloride is removed by reactions with the potassium permanganate. A third bed of activated carbon captures any breakthrough from the previous two beds.

4.2.6 Residuals Management

Similar to carbon adsorption, zeolite technology requires sequential replacement or regeneration to remove and destroy VOCs sorbed onto the zeolite bed. This requirement generates residuals that may be classified as hazardous waste requiring further treatment or destruction.

Regeneration can be achieved by either vacuum adsorption or temperature swing adsorption. In vacuum adsorption, a vacuum pump lowers the pressure of the adsorbent to below the vapor pressure of the contaminants. Consequently, the contaminants boil off the adsorbent without an increase in temperature. In temperature swing adsorption, the adsorption bed is subjected to steam or a different source of heat, allowing the contaminants to boil off. During regeneration, the temperature swings

from ambient temperatures to 250 to 350 °F (U.S. EPA 1999). The concentrated air stream is often fed into an oxidizer where the contaminants are destroyed.

4.2.7 Cost and Economics

The cost of manufactured hydrophobic zeolites ranges from $6.50 to $40.00 per pound. Generally, a minimum of 1 ton of zeolite is needed for treatment of VOCs, and this amount can handle up to 8,000 cfm (U.S. EPA 1998). Similar to activated carbon systems, zeolite system costs depend greatly on factors such as vapor flow rate and VOC concentrations. As examples, a unit sized for an influent concentration of 110 ppmv costs $1,000 to $1,500 per ton of VOCs removed. This cost increases to approximately $3,250 per ton of VOCs removed for a stream with an initial concentration of only 20 ppmv (Munters Corporation 2005). By comparison, activated carbon costs range from $1.40 to $2 per pound ($2,800 to $4,000 per ton) (U.S. EPA 1998).

A zeolite rotary concentrator system sized for a 970-scfm vapor flow rate with a less than 110-ppmv VOC influent concentration costs approximately $67,000. Including a Cat-Ox that would then thermally treat the desorbed VOCs would increase the cost to approximately $160,000. A fuel savings of 80 percent can be achieved by a zeolite rotary concentrator/oxidizer system compared to a conventional catalytic oxidation system without the zeolite rotary concentrator (Munters Corporation 2005).

Zeolite systems regenerated using pressure swing adsorption at room temperatures do not require a source of heat during regeneration and therefore would allow some cost savings over activated carbon systems. As described in Section 4.2.3, certain compounds tend to polymerize on the zeolites, requiring added costs for desorption.

4.2.8 Developmental Status

Zeolites are naturally occurring and manufactured materials used extensively in several commercial applications. Zeolites are used fairly extensively for industrial air pollution control; therefore, the technology is relatively well developed. As described in Section 4.2.2, however, there are few, if any, commercial applications of zeolite adsorption for SVE off-gas treatment.

Because zeolites have had limited use for treating SVE off-gases, there is limited regulatory awareness of this adsorbent. Zeolites challenge activated carbon as the preferred adsorbent in certain fixed-bed adsorbers. Zeolite has reportedly been used instead of carbon in systems in Europe (U.S. EPA 1998).

Vendors of this technology are listed below. This list is not meant to be comprehensive and was developed from mention in literature and from Web sites providing descriptions of technologies applicable to SVE off-gas treatment. Mention of trade names or commercial products does not constitute endorsement or recommendation for use.

- Munters Corporation; Amesbury, MA; www.munters.com
- Hydrosil International, Ltd.; Elgin, IL; www.hydrosilintl.com
- PQ Corporation; Berwyn, PA; www.pqcorp.com
- Grace Davison; Columbia, MD; www.gracedavison.com
- Dedert Corporation; Olympia Fields, IL; www.dedert.com
- Dürr Industries; Plymouth, MI; www.durr.com/en/
- Zeolyst International; Valley Forge, PA; www.zeolyst.com

4.3 Synthetic Polymer Adsorption

Polymer adsorption is similar to carbon and zeolite adsorption in that contaminants are captured and removed from a vapor stream through physical adsorption. The process components are similar to those of a GAC or zeolite adsorption system. In general, polymeric adsorbents (such as plastics, polyesters, polyethers, or rubbers) are not considered highly selective of the VOCs adsorbed. They are more expensive than carbon but do not need replacement as frequently. Relative to carbon, they are less sensitive to humidity, less subject to fire, and less subject to loss of integral structure. The polymers can be regenerated as the other adsorbents can, and synthetic polymers have been observed to desorb more quickly than carbon.

4.3.1 Technology Description

Polymer adsorption uses synthetic polymer adsorbent packing instead of activated carbon or zeolites. Polymeric adsorbents have manufactured pores, and pore sizes range from macro-porous through molecular sizes. The smallest pore size is still larger than the micropores of activated carbon (U.S. EPA 1999). Polymer adsorbents are used as granules or beads and are usually plastic.

The use of polymer adsorbents for SVE off-gas treatment is not particularly well developed compared to the use of activated carbon, but polymer adsorbents are more commonly used than zeolites. Dow Chemical Company developed a polymer adsorbent (DOWEX OPTIPORE™) in 1997 designed for adsorption of chlorinated VOCs from SVE and groundwater off-gases generated from site remediation (RTN 1999a). Thermatrix Inc. (Thermatrix; formerly PURUS, Inc.) is currently marketing the PADRE® system for SVE off-gas treatment in the United States. In general, the system resembles other activated carbon and zeolite filter bed systems but uses a hydrophobic polymer adsorption medium made by Dow Chemical Company. A regeneration loop feed from the adsorbent bed allows air flow through a chiller and condenser, where contaminant chemicals are separated and drain to a waste storage tank. Figure 4-5 shows a typical polymer adsorption system.

Figure 4-5. Polymer Adsorption System

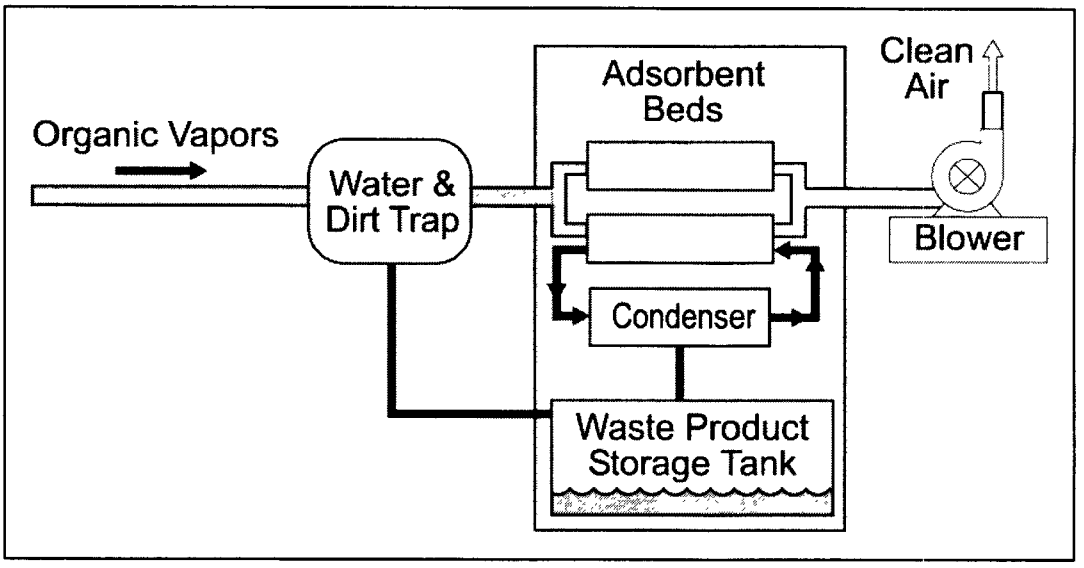

Source: AFCEE 1995

4.3.2 Applicability

Because polymeric adsorption is non-selective in nature, this technology is applicable to a wide range of VOCs and chlorinated VOCs and has been shown to be effective in various applications, including SVE off-gas treatment. Thermatrix reports that the PADRE® system treated off-gases from an air stripper containing PCE, TCE, TCA, and DCE at concentrations ranging from 1.8 to 9 ppmv (RTN 1999a). Other chemicals successfully treated using this polymeric adsorption technology include freons, toluene, xylenes, aldehydes, ketones, and alcohols.

Polymer adsorption systems can be applied to a wide range of vapor flow rates. One manufacturer reports that its systems have been used to treat vapor flow rates ranging from 100 to 10,000 scfm and can accommodate mass loadings of up to 30 pounds of VOCs per hour (RTN 1999a).

Polymer adsorbents are much less sensitive to humidity compared to activated carbon, so they can be applied to off-gas streams with humidity greater than 90 percent without the loss of adsorption efficiency. Polymers are usually hydrophobic and do not adsorb water readily; however, they can be specifically made with other affinities. For example, amphophilic block co-polymers can have both hydrophilic and hydrophobic affinities (U.S. EPA 1999). Polymers, like carbon, have a linear adsorption isotherm relative to vapor pressure (concentration) of VOCs; therefore, they are similar in usefulness when concentrations of influent vapors are higher.

The polymer bed capacity is somewhat lower than for zeolites but somewhat higher than for carbon. Desorption time is less than for carbon or zeolite systems, and desorption requires lower temperatures. Polymer adsorbents are also less prone to fires than carbon and are more structurally stable.

4.3.3 Limitations

Use of polymer adsorbents is not as effective for low VOC concentrations as carbon and zeolites since polymer sorbents have linear adsorption isotherms relative to influent VOC concentrations. The cost of polymer adsorbents is in the range of zeolites. For example, DOWEX OPTIPORE™ is $14 per pound. Also, technical experience and results for polymer adsorbents in SVE off-gas applications are limited. One manufacturer's system is not appropriate for air streams containing vinyl chloride because it is difficult to maintain this compound in a condensed form during the system's regeneration cycle (RTN 1999a).

4.3.4 Performance

Polymer adsorption systems appear to be capable of achieving DREs greater than 95 percent. The PADRE® process is an ex situ off-gas treatment technology marketed by Thermatrix. As of 1995, 30 field installations of this system existed, and the system is still commercially available today. This system includes a regenerative component and involves one on-line treatment bed for influent air, and another bed undergoes a desorption cycle. A controller switches the beds between adsorption and desorption cycles. The desorption cycle uses a combination of heat, pressure, and nitrogen purge gas. Contaminants are removed, condensed, and transferred as a liquid to a storage tank for reclamation and disposal. The PADRE® system has been demonstrated to achieve 95 to more than 99 percent removal of several chlorinated VOCs, including TCE, PCE, DCE, and TCA. Outlet concentrations were all reported as not detected (RTN 1999a).

A field demonstration of the PADRE® system was conducted in 1994 at Vandenburg AFB in California to treat hydrocarbon vapors. Maximum soil gas concentrations at this site were 54,000 ppmv for hydrocarbons and 400 ppmv for benzene. Treatment flow rates ranged from 20 to 49 scfm during the 110-day demonstration. Average removal rates for the PADRE® system were greater than 98 percent for total hydrocarbons and greater than 99 percent for benzene. The cost of the demonstration was $23 per kilogram of hydrocarbon removed (AFCEE 1995).

General Electric Company evaluated more than 100 adsorbents compared to activated carbon. Commercial polyether/polyester block co-polymers and rubber were shown to have a high capacity for adsorbing chlorinated VOCs in saturated vapors, but their capacity at low concentrations was orders of magnitude below that of the other types of sorbents. This characteristic would severely limit the value of synthetic polymers in environmental remediation applications. One polymeric sorbent, DOWEX OPTIPORE™, was observed to be an excellent alternative to activated carbon. In general, it desorbed faster and at lower temperatures than carbon and had at least as great or larger adsorption capacity in

either high or low humidity (U.S. EPA 1999); however, the maximum temperature for desorption must exceed the boiling point for the VOC and not exceed the polymer's melting point.

Polymer materials can be regenerated using a combination of relatively low-temperature heat (compared to GAC), pressure, and a nitrogen purge gas. Polymers vary from 50 to 90 percent in their ability to adsorb contaminants after regeneration compared to the virgin material; carbon only has a 50 percent adsorption capacity after regeneration. Adsorbent beds used in the PADRE® system have been recycled on a test basis more than 2,000 times, with no measurable loss of adsorption capacity. Similar to zeolite adsorbents, polymeric adsorbents rarely need replacement (only slightly more frequently than zeolite) because they are less sensitive to humidity and less subject to fire, crumbling, or powdering (U.S. EPA 1999).

4.3.5 Engineering Considerations

The use of polymer adsorption systems is similar to that of carbon and zeolite adsorption systems. Polymer adsorption systems can be designed as stand-alone units or combined in series and used as add-on polishing treatment for less effective technologies. The effect of regeneration (as discussed in Section 4.1.5) should be considered when the size of the synthetic polymer adsorption bed is designed. This effect will reduce the working capacity and can therefore require up to twice as much adsorbent in the bed. The capacity of the bed is based on the chemicals in the contaminant stream, the concentrations of the chemicals, the air flow rate, the working capacity, and the regeneration frequency. Because polymer regeneration is not needed as often as carbon regeneration, system designers should perform a cost-benefit analysis to determine if off-site remote regeneration or on-site regeneration is the most desirable.

4.3.6 Residuals Management

A residuals management concern for polymeric adsorption is that, like other adsorption technologies, VOCs are captured and removed from air only. Follow-up treatment of the desorbed contaminants may be required. The use of low temperatures during regeneration allows for more efficient reclamation of solvents and other recyclable materials.

4.3.7 Cost and Economics

Limited cost information is available for polymer adsorbents. Information provided by a U.S. EPA technical bulletin comparing carbon, zeolites, and polymer adsorbents indicates that the cost of synthetic polymers is as much as 20 times that of activated carbon (U.S. EPA 1999). DOWEX OPTIPORE™ is $14 per pound (RTN 1999a). The replacement frequency of polymer sorbents is far less than for the other adsorbents.

Factors that significantly impact unit prices include initial contaminant concentration, volume of gas stream to be treated, and target cleanup levels. For example, polymeric adsorption is generally not cost-effective for streams with VOCs concentrations of less than 100 ppmv.

4.3.8 Developmental Status

Polymeric adsorption systems are a readily available technology for a variety of industrial applications but do not appear to be used very frequently for SVE off-gas treatment applications. Consequently, there is not much experience in the use of these sorbents for remediation applications. As of September 1994, there were 23 PADRE® systems installed across the country (AFCEE 1995). Polymeric adsorption systems likely have not been used as often for SVE off-gas treatment because of the higher costs of the sorbent material and the substantial historical use of carbon for SVE off-gas treatment.

In 1995, a site demonstration was performed at McClellan AFB in California. The 2-month study was conducted using an elastomeric polymer filter medium to treat VOCs and petroleum hydrocarbons in the vapor phase from a SVE system in operation at the site. The filter medium was a blend of cross-linked polymer and activated carbon (PetroLOK™ PL22 by Advanced Water Systems). The site contained soils impacted with TCE, cis-DCE, benzene, and vinyl chloride. One-hundred-pound canisters placed between an air-water separator and a blower were tested and compared. The canisters included the polymer/carbon blend and the polymer alone operating at flow rates of 11 to 35 cfm and inlet VOC concentrations of 350 to 740 ppmv. The polymer/carbon blend medium had a DRE of 89 percent during the test but a maximum adsorptive capacity of only 15 percent. When the inlet concentration was diluted 50 percent, the DRE increased to 99 percent. The polymer medium alone was not observed to remove any VOCs from the off-gas stream. The overall performance of the polymer/carbon media was about the same as the GAC used for the existing SVE system.

Under the U.S. EPA's "Waste Reduction Evaluation at Federal Sites," the PADRE® system was successfully demonstrated at the Tinker AFB for the capture and recovery of MEK used in paint stripping (RTN 1999a).

Vendors of this technology are listed below. This list is not meant to be comprehensive and was developed from available literature and from Web sites providing descriptions of technologies applicable to SVE off-gas treatment. Mention of trade names or commercial products does not constitute endorsement or recommendation for use.

- Thermatrix (formerly Purus Inc.); Blue Bell, PA; www.thermatrix.com
- Advanced Water Systems; Woodinville, WA; www.advanced-water.com
- DOW Chemical Company; Midland, MI; www.dow.com

5.0 BIOFILTRATION TECHNOLOGIES

Biofiltration processes biologically degrade VOCs present in remediation off-gas streams using microorganisms located on a fixed media. Throughout the 1960s, 1970s, and 1980s, biofiltration has been used increasingly throughout Europe (particularly in Germany and the Netherlands) and Japan as an accepted technology for controlling VOCs and odors. The technology has treated various VOCs and odor-producing compounds (such as hydrogen sulfide, mercaptans, and air toxics) from a variety of sources, including wastewater treatment plants and chemical and food processing facilities. By the 1990s, as many as 500 biofilters were in operation throughout Germany and the Netherlands (Leson and Winer 1991).

Use of biofiltration as an air pollution control technology began in the United States during the 1990s. The technology has been used to treat odors and HAPs from several sources, including composting facilities, biological wastewater treatment plants, petroleum refineries, commercial bakeries, and chemical manufacturing facilities. In the past 5 to 10 years, a number of different industries in the United States have accepted biofiltration as an alternative to thermal and sorptive VOC control technologies. Biofiltration can be a low-cost technology for treating off-gases generated from SVE systems when BTEX components are the contaminants of concern, and DREs are generally greater than 90 percent. Biofiltration offers the advantage of destroying the contaminant compared to carbon adsorption, which merely transfers the contaminant to an adsorptive medium requiring further treatment or disposal. However, according to several principal companies installing biofiltration units, fewer than 20 full-scale biofiltration systems are currently treating off-gas vapors from soil and groundwater remediation applications. In addition, many projects conducive to SVE and biofiltration are also candidates for bioventing, unless air injection is infeasible for practical or safety reasons.

5.1 Technology Description

Biofiltration occurs within a bed or vessel of biologically active filter material called the "treatment cell." This filter material acts as a support matrix for the location and attachment of microorganisms that eventually form an aqueous biofilm. The microorganisms can include bacteria, heterotrophs, oligotrophs, and fungi, and can be naturally occurring or added to the filter. The biofilm resides in the moisture (water) layer, which coats the filter. Sometimes the filter also provides nutrients for the microorganisms. As the contaminated vapor stream passes through the treatment cell, the filter does not trap contaminants as in adsorption but rather retains them so that the organic contaminants diffuse through the biofilm formed around the solid filter material. The microorganisms within the biofilm obtain primary energy and carbon by oxidizing (consuming) the organic contaminants. The resultant end products are usually carbon dioxide and water, plus mineral salts if the constituents contain molecules such as sulfur, nitrogen, and chloride. The microorganisms regenerate themselves and ultimately die and are recycled.

A typical biofiltration system (both for SVE off-gas and industrial vapor stream treatment) involves the general configuration and process components summarized below (Swanson and Loehr 1997).

Particulate Removal: Pre-treatment of the waste stream for particulate removal is performed to protect downstream system components from particle build-up or clogging. Pre-treatment can be accomplished with simple screen filters, more complex Venturi scrubbers, or electrostatic precipitators.

Flow Equalization: Depending on the design of the biofiltration system, the performance of the system and microorganisms are often slow to respond to transient spikes in influent VOC concentrations. The system can also be upset by such "shocks;" therefore, a flow equalization vessel (sometimes containing GAC) leading to some type of diffuser may be used to dampen spikes and better distribute peak VOC loadings on the biofilter unit. Uniform distribution of the influent stream is required to ensure that the vapor contact time with the biofilm is adequate for consistent contaminant DREs.

Humidification Regulation: Humidity is the single most important parameter affecting biofilter performance. The influent vapor stream's relative humidity should be as close to 99 percent as possible. Moisture content is typically maintained by humidifying the influent vapor stream before it enters the filter bed using equipment such as quench ducts, atomizing nozzles, and packed towers. This technique prevents moisture and chemicals targeted for treatment from being stripped from the filter material as the vapor stream passes through it. The moisture is also necessary to allow the microorganisms (and thus biofilm) to develop. Many systems use an overhead spraying mechanism to add moisture and nutrients to the filter material.

Temperature Regulation: Temperature regulation is also important for both the microorganisms and efficient adsorption of the contaminants in the biofilter. For example, mesophilic bacteria that operate in biofilters have an optimal temperature range of 50 to 105 °F. Metabolic rates of bacteria can double with each 10 °F increase in temperature. Temperature and humidity of the influent vapor stream are somewhat interdependent. The influent vapor stream may need to be heated or cooled to the optimal temperature for microbial activity prior to being passed through the biofilter. Most SVE off-gas treatment systems are exposed to ambient conditions and often require heat input unless insulated adequately. Heating can be accomplished by injecting steam or by direct heating of the air stream using natural gas or electricity. Cooling can be accomplished with evaporative or forced cooling (heat exchanger). Humidification and temperature regulation are generally performed during the same step, although heating of the gas stream may sometimes precede humidification.

Residence Time in Filter Bedding: A typical parameter frequently used to describe biofilters is empty bed contact time (EBCT). EBCT represents a standard measure of gas residence time and is used to compare the design of different biofilters and the effects of different mass loadings within the same biofilter. EBCT is the bulk volume of the filter material divided by the volumetric flow through the system; therefore, the inlet gas flow rate (blower design) may affect the mass transfer driving force from vapor to biofilm and require adjustments in residence time. The average gas residence time is a function of the porosity and moisture content of the filter bedding material. Together, these parameters

comprise the effective porosity of the media. Choice of biofilter media can affect pressure drop and compaction rates, which can vary substantially for different media and impact residence time. Actual residence time will vary depending on how evenly the air flows through the biofilter. An EBCT of 1 to 2 minutes is generally considered the upper limit for cost-effective treatment using biofiltration (Leson and Smith 1997). Lesser residence times may not result in sufficient treatment, and longer times could make the biofilter too big to be cost-effective.

Measurement and Control: Depending on the location and sensitivity of the biofiltration system, operation and performance measurement and programmable logic controller equipment may be necessary. Information can be directly observed at the system or by remote monitoring and controlled using system collection and data acquisition designs. Typical measurement parameters include pH, temperature, head loss, moisture, air flow rate, influent and effluent concentrations, biomass, and DREs.

Biofiltration reactor units can vary greatly in size and shape depending on the contaminants to be removed from the waste stream and the required DRE. Most biofiltration systems used to treat low-flow remediation off-gas streams are fully enclosed vessels or columns. Column systems may range in size from a few inches to a few feet in diameter and from approximately 3 to 10 feet in height. Many small systems employ 55-gallon drums packed with filter media. One or more biofiltration vessels can be stacked or aligned in series to improve performance. Other types of biofiltration systems are open-top bed systems. Typical SVE system flow rates range from 100 to 1,500 scfm. Large systems are usually rectangular and resemble light industrial/commercial buildings. These systems are mainly used to treat industrial process emissions with high flow rates. One of the largest industrial biofiltration systems in the world is located in Germany and has 85,000 cubic feet of filter material. In the Netherlands, there are biofiltration systems with flow rates of up to 240,000 cfm. Figure 5-1 shows a schematic diagram of a typical biofiltration process.

Figure 5-1. Typical Biofiltration System

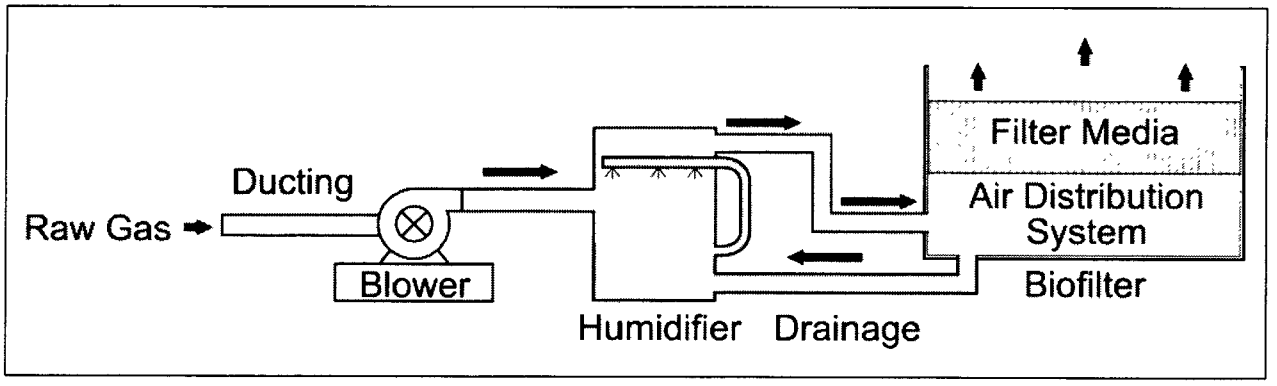

Source: U.S. EPA 1995b

5.2 Applicability

Biofiltration has been used successfully in commercial applications in the United States and Europe but does not have a long history or a large number of case studies for use with SVE systems. Commercial applications include petrochemical, furniture manufacturing, various food industry, and printing operations. Vendor information indicates that biofilters can also be used to control chemical and odor emissions from a variety of manufacturing operations, including petroleum refining, chemical processing, wood and paper processing, wastewater treatment, and paint spraying (RTN 1999a).

Specific classes of compounds that are readily biodegradable in biofilters include mono-aromatic hydrocarbons, alcohols, aldehydes, and ketones. Biofilters have also been used with mixtures of VOCs including compounds such as hydrogen sulfide that create problematic byproducts when oxidized, such as sulfuric acids that kill the microbes. In such cases, two-stage reactors can be constructed. The first stage can use (1) non-compacting inert media that are acid-resistant to treat the low-pH hydrogen sulfide or (2) calcium carbonate minerals to neutralize the pH. The second stage then treats the other VOCs at a more neutral pH. Depending on the application, biofilters can also be designed to accept continuous low flows of aqueous waste streams. These types of biofilters are also known as "biotrickling filters." Biotrickling filters can operate as up-flow reactors with open tops and as enclosed, insulated reactors with engineered media.

In the last few years, approximately 100 smaller systems (less than 500 cfm) have been used to treat landfill gas collected using SVE as well as gasoline vapors from SVE systems at many U.S. service stations (Skladany and others 1995; Bohn Biofilter Corporation 2005). Biofiltration is most effective in treating vapor streams from SVE systems remediating leaking USTs at gas stations. These systems require the destruction of aliphatic petroleum hydrocarbons as well as aromatic compounds such as BTEX compounds. Bacteria degrade simple short-chained compounds first, then successively larger compounds (such as C-8 aliphatics), then aromatics. Hydrocarbons up to the heavier constituents in JP-4 and JP-5 jet fuels (which are likely to be removed by a typical SVE system) are the simplest compounds to treat using biofiltration. Higher molecular weight compounds require longer EBCT for complete oxidation, making removal of these compounds by biofiltration somewhat less economical.

Biofilters may be used to treat relatively dilute VOC concentrations of typically less than 1,500 total ppmv, although concentrations as high as 5,000 ppmv can be treated. Treatment efficiency depends on the mix of the compounds and the duration of the mass load. If concentrations vary widely in the influent over time, the bacteria may not adapt to the variety of compounds or high concentrations. Higher concentrations may become toxic to microorganisms and inhibit biodegradation of the waste stream (Leson and Winer 1991; RTN 1999b, c, and h).

Biofilter systems have been designed and installed to treat vapor flow rates ranging from less than 100 to approximately 240,000 cfm (RTN 1999a). For most SVE applications, system flow rates typically range from 100 to 1,500 scfm. In general, higher vapor or mass flow rates require larger biofilter designs to maintain the required DRE and necessary EBCT.

SVE off-gas treatment systems are typically designed with emphasis on high initial expected off-gas contaminant concentrations and an assumed short duration of SVE system operation. Based on these criteria, biofiltration would likely be limited for most SVE off-gas applications; however, off-gas concentrations generally quickly decline to substantially less than initial levels. In addition, SVE remediation systems are often operated for longer than initial design expectations. When these factors are taken into account, biofiltration may be applicable to a greater number of sites.

Biofiltration systems can be designed to operate with other off-gas treatment technologies as well. The most common companion technology used with biofiltration is activated carbon to "polish" the biofilter effluent. In this way, temporary system upsets are readily managed.

5.3 Limitations

A significant limitation to biofiltration is its sensitivity to variations in operating parameters such as moisture content, temperature, pH, and nutrient levels. This sensitivity is likely because the system incorporates living microorganisms. Constant monitoring and maintenance of these operating parameters is necessary to sustain the microorganisms and achieve the required contaminant removal rates. System performance can also be upset by a build-up of biomass within the treatment cell; therefore, frequent backwashing of the system is required.

Most biofiltration systems in operation are used for odor reduction for wastewater treatment facilities and food processing operations or as an air pollution control technology for VOC emissions from industrial operations. Therefore, another limitation is the lack of data associated with the limited number of systems used specifically for SVE applications.

Most biofilter systems experience an initial period of low or no contaminant removal while the microorganisms acclimate to the contaminants and multiply to sufficient quantities. This initial acclimation period can be as long as 30 days; therefore, biofilters are not reliable for maximum contaminant DREs after installation. Interruptions in system operation will also result in brief periods of reduced DREs immediately after system restart. For these reasons, biofilters may not be appropriate when intermittent or cycled operation of an SVE system is planned (such as during the later stages of site remediation).

As discussed in Section 5.2, biofiltration is limited to relatively low concentrations of total VOCs (0 to 5,000 ppmv, with an optimum concentration of no more than 1,500 ppmv). In addition, depending on the mass loading and design of the treatment system, a relatively stable variety of influent constituents that are degradable is also required. Excessive influent concentrations could be managed by diluting the vapor stream with ambient air to avoid this limitation. This dilution may cause the volumetric flow rates to increase and the size of the unit to provide the necessary EBCT may no longer be economically feasible or practical for the location.

The type of contaminants targeted for treatment is also very important. For example, a 50,000-cfm vapor stream with an ethylbenzene concentration of only 50 ppm could be treated using biofiltration, but the residence time would be about 4 minutes and therefore would not be feasible given economic limitations. In contrast, a system with the same flow rate and 50-ppm concentration of MEK would only require a residence time of 25 seconds, making biofiltration a very feasible treatment option.

Another limitation is that DREs can drop as the concentration of the vapor stream drops. Depending on the VOCs involved, the mass transfer limitation, and not the biodegradation rate, would control the biofilter at low concentrations. For volatile but only slightly soluble VOCs, therefore, diffusion into the biofilter may decrease, causing a decrease in DRE.

Based on the DREs that are attainable for a given biofilter design and influent vapor stream, this technology may not be effective in achieving strict regulatory emission standards that exceed 99.8 percent, for example. This technology can be successful at attaining performance-based reductions such as those of some agencies for limiting the total mass discharged to a certain number of pounds of VOCs per year.

Chlorinated VOCs such as PCE and TCE are not effectively treated by biofiltration. These VOCs are not highly water-soluble or easy to biodegrade. Highly aerobic conditions achieve good removal of light to moderately halogenated organics. Heavily halogenated species appear to require anaerobic or co-metabolic (added methane, propane, or aromatics) conditions for at least the first stages of decomposition. The limited data regarding the use of biofiltration to treat chlorinated VOCs indicates that biofiltration is not yet applicable to these compounds on a commercial basis. Likewise, the current generation of biofilters does not address other complex compounds on a commercial scale. One exception is MTBE, which studies have shown is destroyed at a high efficiency rate by biofilters (Fortin and Deshusses 1999).

5.4 Performance

Consistent DREs of greater than 90 percent have been achieved for many common air pollutants in industrial off-gas treatment systems. Information regarding performance of biofilters for SVE off-gas treatment is only now becoming available as their use increases. To monitor performance, various methods are used, including interval and continuous monitoring of influent, effluent, or both. U.S. EPA Methods 25 and 25A are often used to monitor total VOCs. Methane is poorly filtered out of most air streams and can yield false-positive results because methane is not usually of regulatory concern. In addition, some analytical detectors have a low response to certain chemicals, and high relative humidity can affect instrument readings. Gas chromatography/mass spectroscopy testing can yield better confirmation of influent and effluent concentrations.

Mass loading is an important parameter that directly relates to the performance of a biofilter. Mass loading is the amount of contaminant that can be applied per volume of filter material within a given time period. It is typically expressed in units of grams per cubic meters per hour ($g/m^3/hr$) and ranges

from approximately 10 to 150 g/m^3/hour. SVE biofiltration systems, which often treat slightly less biodegradable hydrocarbons than alcohols and ketones, usually achieve the lower end of this range. The mass-loading rate of a particular system is dictated by the required DRE (Swanson and Loehr 1997).

The maximum elimination capacity (MEC) is a measure of a biofilter's capacity to remove contaminants at a given mass-loading rate and is used to define the effectiveness of biofiltration systems. MECs vary for different chemicals, filter materials, and operating conditions, and are ideally equal to or slightly greater than the mass loading rate. Mass loading rates that exceed the MECs may result in system clogging and/or toxic conditions that inhibit biodegradation (RTN 1999g). In addition, regardless of the DREs of a particular biofilter, the filter will have a finite mass removal limit before it requires recharging and re-start-up. This limit depends on compaction, longevity of filter media, and limitations on maximum biological growth.

At optimum conditions, biofiltration has been demonstrated to effectively treat VOC waste streams; however, biofilters are relatively sensitive to deviations in system inputs. Fluctuations in contaminant concentrations, air stream moisture content, and flow rates will all substantially affect biofilter performance. For example, a laboratory study of BTEX removal using biofiltration reported greater than 95 percent removal for all BTEX compounds at an EBCT as low as 1 minute and a mass loading of 4.2 kilograms of chemical oxygen demand per cubic meter per day (Sorial and others 1997). The overall DRE dropped to 88 percent when the mass loading was increased to 6.2 kilograms of chemical oxygen demand per cubic meter per day, and the EBCT decreased to 40 seconds. Another study reported DREs of greater than 95 percent for the following compounds when the influent concentrations of these constituents were below 300 ppmv: styrene, methanol, ethanol, formaldehyde, MEK, ethyl acetate, ammonia esters, ethers, and phenol (RTN 1999h).

Provided that optimum conditions are maintained, a properly designed biofilter should achieve greater than 90 and perhaps more than 95 percent DRE. Vendors report better than 99 percent removal of hydrogen sulfide, 95 to 99 percent removal of odors (ENSR 2004b), and greater than 90 percent removal of VOCs (RTN 1999c). The high DREs occur, however, only after steady-state operating conditions have been achieved (Heumann 1998).

DREs for biofilters are very much related to the biofilter matrix used. Certain materials provide more optimum porosity, a wider microorganism population, more adsorption capacity, or better pH buffering. In bench-scale testing, a number of organic biofilter media were evaluated for the treatment of hydrocarbon fuel vapors from both jet fuel and diesel fuel (Hodge and others 1991). Activated carbon was a better filter medium than soil, diatomaceous earth, or a combination of carbon and diatomaceous earth. Jet fuel vapors were removed more rapidly than diesel fuel vapors, and the concentrations declined linearly, signifying zero-order kinetics with respect to the substrate concentration. Chang and Devinny (1996) document a bench-scale study in which GAC, bark compost, and yard compost were evaluated for biofiltration effectiveness on JP-4 jet fuel vapors. GAC

had a good efficiency and tolerated load shocks well, whereas yard compost had slow acclimation, good shock recovery, excellent DRE (more than 99 percent) but significant compaction.

DREs also vary depending on the type of contaminants treated. Three published studies indicate that biofilters can be expected to have DREs of 90 percent or greater for BTEX compounds in off-gas from SVE systems but less for total VOCs and total petroleum hydrocarbon (TPH) removal (Leson and Smith 1997; Wright and others 1997; Swanson and Loehr 1997). The reduction in DRE depends on the site-specific mass transfer from the gas phase to the filter media. Leson and Smith (1997) present results from a field pilot study funded by the Petroleum Environmental Research Forum, a consortium of several major oil companies that confirmed aromatic removal greater than 90 percent at residence times of less than 1 minute. The removal of total VOCs, however, only exceeded 70 percent and required substantially longer residence times (Skladany and others 1995).

The DREs for biofilters used for eight gasoline service station SVE systems in Arizona averaged 90 percent for TPH, 95 percent for BTEX, and 80 percent for aliphatic petroleum VOCs (Bohn Biofilter Corporation 2003). Biofiltration research for MTBE, another compound often present in SVE off-gas from petroleum remediation, has begun to show promise. Fortin and Deshusses (1999) report greater than 97 percent removal of MTBE when the system was allowed an acclimation period of 6 months.

From August 1995 to April 1996, a full-scale biofilter was contracted by Black and Veatch to treat jet fuel from an enhanced SVE system at March AFB, Site 18 (Chang and Devinny 1996; TRG 2004). Bench-scale modeling tests showed compost media to be effective. The full-scale biofilter (18 cubic yards) was operated at 100 to 180 cfm continuously 24 hours per day, 7 days per week. Influent concentrations ranged from 128 to 1,400 ppmv, and the biofilter had an acclimation period of 2 to 3 weeks. The DRE of the full-scale biofilter was greater than 90 percent; however, the project was not run long enough to determine the longevity of the filter media. Key performance factors included consistent airflow, proper insulation of the biofilter, maintenance of adequate moisture conditions, and prevention of short-circuiting of the influent air.

Many chlorinated VOCs are not effectively treated by conventional biofilters because of the function of the microbial degradation mechanisms required (anaerobic or co-metabolic). Chlorinated VOCs can degrade the biofiltration performance for non-chlorinated VOCs (Heumann 1998). Biofiltration of chlorinated VOCs is a field of ongoing research. Aerobic biodegradation of the most prevalent chlorinated VOCs (such as TCE) extracted by SVE systems occurs co-metabolically. Cox and others (1998) indicate that under appropriate reduction-oxidation and substrate conditions, the DRE for TCE could exceed 95 percent for a co-metabolic biofilter intermittently fed toluene as a co-metabolite; however, data from several studies showed relatively poor DREs for these types of systems (the maximum DRE reported was 74 percent) (Lewis and McPherson 1996; Devinny and Hodge 1995; Tonga and Magar 1997).

5.5 Engineering Considerations

Moisture content, temperature, pH, nutrient levels, contaminant concentrations, air flow, and influent constituents all must be continuously monitored and maintained at optimum levels for proper biofilter performance. Deviations from optimum ranges can result in system upset. Because biofiltration systems are sensitive to relatively minor fluctuations of these parameters and because many parameters are inter-related, significant engineering effort is required to specify and design a proper biofilter for a site-specific application.

Three important engineering considerations that must be known or at least estimated prior to use of a biofilter for SVE off-gas treatment are (1) the chemical constituents in the vapor, (2) the concentrations of the system influent constituents, and (3) the allowable effluent concentrations required to meet regulatory standards. Pretreatment of the inlet stream can be performed using GAC to prevent unacceptable discharges during the initial acclimation period of the biofilter and to control influent concentration spikes. However, use of GAC with a biofilter could increase both the capital and operating costs.

If particulates are present in the SVE off-gas, they may clog either a GAC pre-filter or the biofilter. A simple bag or screen mesh filter can be used to filter particulates, which are typically measured using U.S. EPA Method PM-10. More complex systems for particulate removal of industrial off-gases include Venturi scrubbers or electrostatic precipitators. Additionally, water-soluble condensed chemical constituents may accumulate in pre-filters, requiring monitoring and management. For off-gases with particulates that are both filterable and condensable, monitoring can be performed using U.S. EPA Method 5 for the front-half of the filter and U.S. EPA Method 202 for back-half condensables. Filters used in certain applications may also become clogged from slime growth of microorganisms caused by high humidity.

Moisture content is probably the most critical parameter associated with biofilter performance. Biofilter DRE is directly related to the health of the biodegrading microbial population, which is related to the filter media moisture content. Insufficient moisture can inhibit diffusion of the contaminants through the biofilm. If conditions are extremely dry, channelization of the media and excessive fungal growth can occur. For these reasons, the influent air should remain moist at all times and be brought to saturation humidity to prevent wide fluctuations in moisture content. Relative humidity also changes with the ambient conditions; therefore, these parameters should be measured and logged. Depending on the level of humidification necessary, atomizing nozzles or packed towers can be used. If the media dries out, spray irrigation can be used. However, humidifiers can also cause slime growth to develop on the packed beds of the biofilter. This growth can be removed by cleaning, washing, and re-loading the bedding material. However, the problem often recurs. Biocides typically used in cooling towers are not recommended as carryover to the biofilter media because they can impair the microorganisms.

Conversely, too much moisture can also adversely affect system performance. Elevated moisture levels reduce the interfacial area between the biomass and the vapor stream, which reduces the ability

of oxygen and contaminants to diffuse through the biofilm. Elevated moisture content can also reduce the effective porosity of the media and impede gas flow so that anaerobic zones develop. Decreased porosity can result in increased back-pressure and increased overall operating cost of the system. Biofilter moisture targets are within the range of 40 to 60 percent relative humidity (Swanson and Loehr 1997; Leson and Winer 1991). De-misters can help prevent excess water carryover into the filter media, often by decreasing the off-gas velocity in ducts or pipes carrying the off-gas to the biofilter (PPC Biofilter Inc. 2004). Maintaining uniform moisture in the media is often more important than trying to keep an optimal target moisture level; however, this situation depends on the biofilter media.

Moisture content also plays a role in modifying the influent gas temperature. Most gas streams do not automatically fit operational requirements and must be conditioned before entering the biofilter. The temperature of the system should be between 77 and 95 °F for optimal microbial biodegradation (Swanson and Loehr 1997). Based on the minimum air temperatures necessary for optimum biofilter operation and the effect moisture has on temperature when it is added to maintain humidity, a minimum wet-bulb temperature of 70 °F should be specified.

Wet-bulb temperature is measured using a standard mercury-in-glass thermometer, with the thermometer bulb wrapped in muslin that is kept wet. The evaporation of water from the thermometer has a cooling effect, so the temperature indicated by the wet-bulb thermometer is less than the temperature indicated by a dry-bulb (normal unmodified) thermometer. The rate of evaporation from the wet-bulb thermometer depends on the humidity of the air; evaporation is slower when the air is already full of water vapor. For this reason, the difference in the temperatures indicated by the two thermometers gives a measure of atmospheric humidity. An increase of the wet-bulb temperature of 1 °F can typically increase DRE by 1 percent. When air is cold and dry, wet-bulb thermometer temperature can be increased by injecting steam into the gas. Within limits, the higher the operating temperature, the more active the bacteria and the shorter the residence time necessary, thereby requiring less biofilter mass. Metabolic rates of bacteria can double with about every 10 °F increase in temperature. Although increasing temperature will enhance the physical properties of the biofilm (solubility, molecular diffusivity, and bacterial metabolism), it will adversely affect the physical properties of the contaminants in the gas state (vapor pressure and Henry's law constant).

Temperature adjustments are usually performed during or prior to the humidification step. If the temperature is greater than 105 °F, the air stream requires cooling such as with a heat exchanger or packed cooling tower. If the temperature is less than 50 °F, the influent requires heating such as with steam or a heater. The influent stream temperature and the exothermic biological reactions that occur within the filter affect the system temperature. Elevated temperatures can result in evaporation of moisture from the filter bed, thereby reducing system DRE. Any heat generated during biological reaction can be recovered and used to heat the system influent stream; however, because most SVE off-gas treatment systems are exposed to ambient conditions, they more often require heat input unless they are well insulated.

The filter materials used in the design of a biofiltration system should have the following properties (Swanson and Loehr 1997):

- High moisture and nutrient retention properties to sustain microbial growth
- A large specific surface area to allow sufficient contact between the vapor-phase compounds and the biologically active material present in the biofilm
- Adequate and relatively uniform porosity to promote even distribution of air flow through the filter materials and to minimize pressure drop through the system
- Ability to maintain a relatively constant and neutral pH
- A low bulk density to minimize the potential for compaction of the material during use

Two types of media are typically used within the filter bed: (1) organic biofilters consisting of soil and compost, leaves, wood, bark, peat, or other organic materials are one common form, and (2) synthetic filter media consists of inert agents such as perlite, vermiculite, polystyrene spheres, or GAC (Swanson and Loehr 1997).

The specific advantages and disadvantages summarized below are associated with each type of filter material.

- Organic filter materials have an inherent nutrient supply, so the addition of nutrients is often not necessary. The nutrients within the reactor will be exhausted eventually, and then supplemental nutrients are necessary or the filter bed must be replaced. Organic filter materials are better at retaining moisture than synthetic filter materials.
- Organic filter materials typically have a wide range of indigenous microorganisms; therefore, shorter acclimation periods are required.
- Organic filters generally eliminate the need to dispose of spent filter material as a regulated solid waste; however, this advantage depends on site-specific situations. Used compost can generally be returned to the earth without environmental impact (Leson and Winer 1991).
- Organic filter materials are subject to compaction ("aging"), which reduces the porosity of the material (Sorial and others 1997; Swanson and Loehr 1997); therefore, organic filter materials need to be replaced more often than synthetic materials.
- Synthetic filter materials are more durable and may have higher surface areas for contact between the biomass and the vapor-phase contaminants. These materials typically require the addition of nutrients with the humidifying water spray.

Some vendors have used soil as a biofilter media. However, soil has a large pressure drop and is not economically feasible on large gas streams (10,000 to 100,000 cfm) because the fan blowers required must be very large resulting in significant power consumption. Organic media are relatively dense and

therefore require a larger footprint for a given system. It is possible to produce biofilters that are stackable in series up to 15 to 20 feet tall in order to reduce the footprint of the system. However, because of density and potential compaction of the biofilter media, consistent air velocities become an issue. For example, stacking compost or peat biofilters is not practical because air velocities greater than 10 fpm usually cannot be sustained. Also, wood-based media experience more fungal growth, which can increase the pressure drop over time. To overcome these problems, a portion of inert media can be added to create an engineered media, which would decrease compaction and the resulting pressure drop and allow use of a smaller fan with a smaller electrical cost. Engineered media allow velocities of greater than 20 fpm but are often hydrophobic and do not have uniform moisture holding capacity. Media with a very large void fraction may attain velocities of 40 fpm but experience a net loss of mass transfer of vapor-phase constituents from the gas phase to the biofilm.

The microorganisms used for a biofilter can come from a number of sources. Often, they are present in the compost media itself and are used as the inoculum because of their diverse existing population. In other cases, microorganisms are derived from sludges or acclimated cultures derived from the contaminated soil or groundwater. Some acclimation period is always necessary, whether for the organisms to become stable in a consortium of other organisms or for them to multiply and seed the entire biofilter with enough biomass to biodegrade the influent effectively. In very few cases, seeding of unique strains of organisms into the biofilter may be required, such as when degradation of recalcitrant compounds is necessary. Reseeding may be necessary if toxic shock loads or other hostile environments (such as low pH) affect the microorganisms.

As described above, biological activity is directly related to temperature. DREs of greater than 98 percent at a temperature of 95 °F have been observed to drop to 70 percent as the temperature fell below 65 °F. This factor is an important design consideration because ambient air to decrease contaminant concentrations may also decrease the temperature of the off-gas. The supply of nutrients to a growing and metabolizing population of microorganisms is important in sustaining biological activity within the filter material. Nutrient addition is a well-known process, and specific guidelines on the required level of nutrients to support microbial health are available in numerous texts on the subject. Because the biofilter is continually used, the nutrients available to the microorganisms may no longer be sufficient for the biomass or may require supplementation. When filter media or biomass become exhausted, the biofilter is often replaced or recharged and restarted.

Generally, optimum microbial degradation occurs at pH readings of 7 to 8. Biodegradation of VOCs can produce acidic intermediate byproducts that can reduce the pH of the system and upset system performance. To overcome the potential for pH reduction within the biofilter, buffering materials (such as lime, marl, and crushed oyster shells) are often added to the filter media. Buffering solution can be added along with moisture and nutrient additions by overhead spraying mechanisms. System performance can also be affected by build-up of biomass within the reactor vessel (such as slime growth or fungal mats), which reduces the filter bed surface area available for biodegradation (Alonso and others 1998) and also increases the pressure drop over the filter bed.

5.6 Residuals Management

Depending on the type of waste being treated, degradation of organic contaminants can result in the generation of acidic intermediates or byproducts. Acidic intermediates occur when the mass loading (VOC concentration) exceeds the MEC. In such cases, the contaminant is only partially degraded and acidic intermediates accumulate. Devinny and Hodge (1995) identify the formation of acetaldehyde and acetic acid when laboratory-scale biofilters were overloaded with ethanol. When the system operated under well-balanced influent concentrations, the acetaldehyde and acetic acid were rapidly degraded and acidic intermediate products were avoided.

Acidic end-products may also result from the biodegradation of some pollutants, including sulfur or nitrogen-containing compounds and chlorinated hydrocarbons (Leson and Winer 1991). The products that can form include sulfuric acid, nitric acid, and hydrochloric acid (Swanson and Loehr 1997). If this build-up becomes excessive and the biofilter becomes inactive, the entire filter media may require disposal. This situation is however, an extreme scenario.

As discussed in Section 5.5, use of compost biofilters eliminates the need to dispose of spent filter material such as activated carbon as a solid or hazardous waste. If an activated carbon pre-filter is used, it must be handled as either a hazardous or special waste, depending on the chemical concentrations it has adsorbed. Dust and particulate filters can usually be managed as general trash. After the filter media are spent, if no contaminants of concern adsorbed to the media, the media can be disposed as universal waste or recycled. For example, compost media can be reused as regular compost at nurseries or as landfill cover material.

Biofiltration systems may also require periodic backwashing to remove excess biomass or slime. Alonso and others (1998) found that build-up of excess biomass in a laboratory-scale biofilter led to significant loss of system DRE resulting from channeling or short-circuiting. The handling of biomass wastes depends on the waste composition and local ordinances, but after dewatering, these wastes may be managed as either a hazardous, special, or municipal waste.

If any chemicals condense out of the influent gas, they will generate a waste stream that may require additional management. This situation is not common but occurs when the influent gas stream is much warmer than the ambient temperature of the biofilter. During cooling (either naturally or forced), heavier molecular weight compounds can condense in ducts and piping leading into the biofilter. In addition, condensates can form on pre-filters that are not heated. Typically, these condensates are in liquid form and can also develop during humidification. System operators must manage and properly dispose of condensate and other liquid residuals based on their chemical composition and local regulatory requirements. Depending on the flow volume and composition, discharge to a publicly operated treatment works may be an option.

5.7 Cost and Economics

Biofiltration is often more economical than activated carbon or thermal treatment when airflow rates are high and concentrations are less than 3,000 ppm (or more frequently, below 1,000 ppm). Start-up costs are generally comparable to conventional technologies such as carbon adsorption and thermal treatment, but O&M costs are substantially lower. The lower operating costs for biofilter systems are the main advantage of these systems.

Capital costs depend on the size of the reactor, which depends on the flow rate, chemical composition, and chemical concentrations. Operating costs largely correspond to electricity and natural gas consumption, water usage, and disposal of the media. These factors in turn are also related to the size of the unit. In general, most operating costs come from operating humidifier pumps and blower fans.

Cost data for biofilter treatment of SVE off-gas are limited because not many projects use biofilters as part of a SVE system. FRTR (2004) reports a unit cost for biofiltration of $0.60 to $1.50 per 100,000 cubic feet of off-gas treated. This cost combines both capital and operational costs into the unit cost and appears to be for a large system and independent of the concentrations in the air stream. FRTR (2004) also reports a unit cost (capital and operation costs included) of $2.27 to $4.55 per pound of contaminant treated. However, these cost ranges are not necessarily applicable to SVE systems, and project-specific details are unknown, such as filter media, capital or operational cost breakdown, contaminants, or concentrations.

The following examples of biofiltration projects are provided to further illustrate the range of costs relative to key factors in biofiltration treatment.

Cost estimates were developed for off-gas treatment at an industrial printing press operation with a flow rate of 6,000 cfm and eight separate VOCs in the influent at concentrations of 0.1 pound per hour (lb/hr) (methanol) to 19.2 lb/hr (propanol). Biofiltration and regenerative Cat-Ox systems were compared, and biofiltration was observed to be the most economical alternative for treating the off-gas stream. The total cost for the biofiltration system over 5 years was $413,500, which included $342,000 for capital costs; $4,300 for operating costs; and $50,000 for media replacement over 5 years. The total cost for the regenerative Cat-Ox system over 5 years was $628,200, which included $350,000 for capital costs; $43,400 for operating costs; and $61,200 for catalyst replacement over 5 years. The low operating cost of biofiltration reduced the 5-year costs significantly (PPC Biofilter Inc. 2004).

Another biofiltration project included eight separate biofilter systems installed at former and operating service stations in Arizona to address SVE off-gas associated with leaking USTs. Each system had a capacity of approximately 50 cfm drawing vapors from one to three wells using compost as the biofilter media. BTEX DRE was 95 percent, TPH DRE was 90 percent, and aliphatic DRE was 80 percent. The duration of these projects ranged from 12 to 36 months, and closure at the sites was completed.

Capital costs for biofiltration at each site were $8,000, with an operating cost of approximately $200 per month (Bohn Biofilter Corporation 2003).

5.8 Developmental Status

Biofiltration is a readily available technology offered by several vendors. Off-the-shelf units are available for smaller flow rates (up to 5,000 cfm); larger flow rates require custom-designed steel or synthetic tanks, masonry structures, or in-ground beds. Currently, commercial biofilters are only applicable for SVE systems that treat non-chlorinated VOCs. Several companies and universities are currently researching the use of biofilters to treat chlorinated VOCs and MTBE.

Because many factors require evaluation to engineer a biofilter for a particular application, a pilot test of a smaller unit (approximately 250 cfm) for an acclimation period of 2 weeks and an operation period of 60 days is often warranted. Based on the results of such a test, applicability of a biofilter to a site-specific air stream can be determined, operating parameters can be modified, and the full-scale biofilter system can be designed. Typical costs for pilot-plant operation range from $15,000 to $25,000, and several vendors have packaged plants for rent to accomplish the pilot testing.

Vendors of this technology are listed below. This list is not meant to be comprehensive and was developed from mention in literature and from Web sites providing descriptions of technologies applicable to SVE off-gas treatment. Mention of trade names or commercial products does not constitute endorsement or recommendation for use.

- Air & Water Solutions, Inc.; Nutley, NJ; www.cleanairplant.com
- Biocube, Inc. (formerly EG&G Biofiltration); Victor, NY; www.biocube.com
- Bio Reaction Industries, LLC; Tualatin, OR; www.bioreaction.com
- Bohn Biofilter Corporation; Tucson, AZ; www.bohnbiofilter.com
- Envirogen/Shaw; Lawrenceville, NJ; www.shawgrp.com
- Matrix Environmental Technologies Inc.; Orchard Park, NY; www.matrixbiotech.com
- PPC Air Pollution Control; Longview, TX; www.ppcbio.com
- The Reynolds Group; Tustin, CA; www.reynolds-group.com

6.0 EMERGING TECHNOLOGIES

A number of emerging technologies that have been applied and developed show promise for treating SVE off-gases. They include non-thermal plasma, photolytic and photocatalytic technologies, membrane separation, absorption, and vapor condensation technologies. Information on the use of these emerging technologies for SVE off-gas treatment is limited compared to the more commercialized processes described in Sections 3.0 through 5.0; therefore, the format of this section is modified to discuss only the technology description and applicability; developmental status; performance; and engineering considerations, limitations, and costs.

Because these technologies are more in the research and testing stage for SVE applications, the information presented herein may change more rapidly than for more commercialized technologies; therefore, if any of these emerging technologies are of particular interest, it may be desirable to perform additional literature investigation to explore new relevant information on the performance, limitations, and state of development for these technologies.

6.1 Non-Thermal Plasma Technologies

Plasma is a gaseous state where molecules or atoms are broken apart to form ions, radicals, and free electrons. In general, non-thermal plasma techniques do not use direct heat or flame but instead use electric fields or energetic beams to destroy vapor-phase contaminants by breaking the molecules into radicals and highly energetic electrons. Non-thermal plasmas operate at 85 to 250 °F but can produce the same radicals and other reactive species normally associated with high-temperature reactions. High-temperature plasma techniques may operate at 3,600 to 18,000 °F. High-temperature plasmas are more commonly used in industrial applications, allow either liquid or gaseous feed streams, and completely destroy any complex molecules.

Under suitable operating conditions in non-thermal plasma treatment, the free radicals formed during the process recombine into non-toxic, simple compounds that can be released to the atmosphere. Non-thermal plasma treatment can achieve high DREs for a wide range of chemicals in off-gases generated from SVE systems.

6.1.1 Technology Description and Applicability

Variations of non-thermal plasma technology include "silent discharge plasma," "tunable hybrid plasma," "electron beam," "low-pressure surface wave plasma," and "gas-phase corona." Each technique uses an electric power source to generate the electric field or energetic beam and a flow-through reactor vessel where the SVE off-gas is treated. These technology variants differ principally in (1) the temperature at which the contaminated vapor is treated and (2) the type and magnitude of the energy applied to ionize the gas.

Silent discharge plasma technology operates at ambient temperatures and uses a 15- to 18-kilovolt (kV) alternating electric field.

Tunable hybrid plasma technology uses a 150- to 175-kV electron beam to create the plasma in the gas stream. Varying the electron energy and density accommodates varying contaminant levels and types. This technique requires a virtually dry gas stream.

In electron beam technology, electrons are generated in a vacuum tube and the resultant beam is used to bombard off-gas vapors flowing through a reaction chamber to ionize the gas stream into plasma. Water vapor in the gas can interfere with the effectiveness of the technique but is sometimes useful in creating additional hydroxyl ions.

The low-pressure surface wave plasma reactor requires the contaminated gas stream to be below ambient pressure. It uses a high-frequency radio source to ionize gas and create the plasma.

The gas-phase corona reactor is similar to the silent discharge plasma reactor but includes a bed of dielectric beads to provide more discharge paths and to catalytically assist decomposition. The system operates at ambient conditions and requires a 25- to 30-kV alternating electric field.

The principle components of the non-thermal plasma system are the reactor vessel and, if chlorinated VOCs are treated, an acid scrubber. The reactor vessel is either a glass or stainless-steel vessel, usually cylindrical and scaled to handle anticipated off-gas flow rates. The reactor vessel (sometimes called the "reactor cell") is connected to the power supply and control system for corona production. As contaminants pass through this chamber, they are converted to radicals. The free radicals recombine further downstream and either emerge from the stack of the reactor directly into the atmosphere (as in the case of non-halogenated VOCs) or continue through an acid scrubber that removes halogen acids (formed when chlorinated VOCs are treated). Multiple reactor cells can be arranged in series or in parallel either to increase the DREs for the contaminants, handle higher volumes of gas, or both. Co-located with the reactor cell array are the high-voltage power supply and necessary electrical control systems. All of the equipment can be mounted in a trailer to make it transportable.

Most often, the results of non-thermal plasma treatment are benign compounds such as carbon dioxide, water vapor, or low concentrations of NOx. When acids are generated (typically when chlorinated VOCs are present in the influent), the effluent must pass through a scrubber before being released to the atmosphere. The scrubber usually contains a mild caustic solution for acid removal but can contain any solution components necessary to remove hazardous contaminants.

The off-gas influent to the reactor is typically filtered and dehumidified. Filtering prevents the reactor from clogging, the electrodes from being coated and damaged, and the air pump (vacuum blower) from being damaged. Dehumidification minimizes corrosion and protects the electric field from

disruption. An air cooler (heat exchanger) may also be added to the gas stream influent treatment train prior to the reaction vessels if a hot inlet gas is treated or may be required to cool the actual equipment for certain forms of non-thermal plasma treatment, although this situation would not typically be a factor for SVE systems.

Of all these forms of non-thermal plasma technology, the two most tested in site remediation applications are those using an alternating electric field: the silent discharge plasma and the gas-phase corona reactor. These technologies are further discussed below.

6.1.1.1 Silent Discharge Plasma

In silent discharge plasma treatment, the contaminated off-gas stream is routed from the SVE blower to a Pyrex® reaction chamber. The chamber is sandwiched between two electrodes attached to a high-voltage power supply. When a high-voltage alternating current (AC) electric field is applied across the electrodes, microbursts of plasma form in the chamber. These plasma bursts create free radicals of the contaminants in the gas stream. The free radicals recombine to form harmless organic molecules, mostly carbon dioxide and water vapor. Chlorinated VOCs in the gas stream will also produce halogen acids that must later be removed by an acid scrubber. The plasma chambers are small because of the small free path length of the plasma, but the chambers can be replicated inexpensively and placed in parallel to handle large volumes of gas.

6.1.1.2 Gas-Phase Corona Reactor

In a gas-phase corona reactor, contaminated influent gas is forced through a reaction chamber, where it reacts with plasma containing high-energy electrons. The reaction of the organic compounds in the vapor stream and the electrons typically produces carbon dioxide and water, and in the case of halogenated hydrocarbons, halogen acids.

Two types of gas-phase corona reactors are typically used for off-gas treatment: a packed bed corona reactor or a pulsed corona reactor. The packed bed corona reactor contains a bed of dielectric packing material (see Figure 6-1). The packing material may be as simple as glass beads or may consist of more exotic materials such as Perovskite ($BaTiO_3$). These more exotic materials possess catalytic properties and increase the effectiveness of this technology but also increase costs. Wire-mesh electrodes are located on each end of the packing bed and are attached to a high-energy AC power source. As the gas flows through the packing material, a high-voltage, low-current AC is applied to the electrodes. The electrons generated from the resulting discharges of the bead "capacitors" create radicals out of the contaminants in the gas stream. According to Current Environmental Solutions (CES), the packing material performs the following three critical functions (ENSR 2004d):

1. Amplifies the electric fields between the beads by refracting the electric currents as much as 10 to 250 times more than would otherwise be possible

2. Acts as a catalyst for chemical reactions with contaminants in the vapor stream
3. Provides adsorption sites for contaminants, which effectively increases the residence time of the contaminant in the reaction vessel

Figure 6-1 shows a simplified schematic diagram of packed bed corona reactor treatment.

Figure 6-1. Packed Bed Corona Reactor

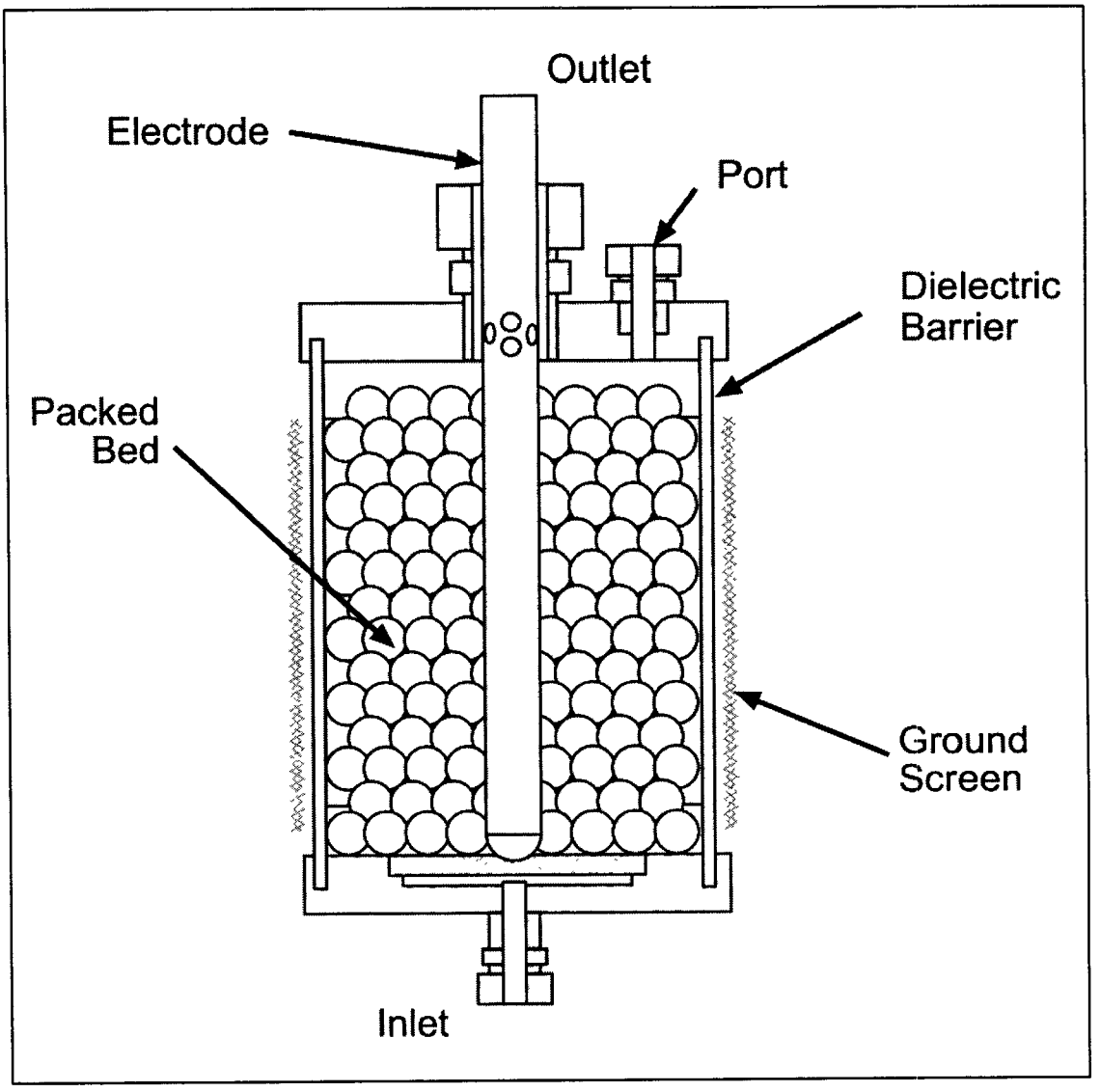

Source: CES 2005

Pulsed corona reactors consist of a single wire centered between two steel electrodes within an unfilled tube. The wire is connected to a high-voltage spark gap power supply. As the contaminated vapor stream flows through the reactor vessel, nanosecond-length corona pulses are used to ionize the organic vapors.

Non-thermal plasma technology can effectively treat a variety of compounds, including aromatic VOCs (such as BTEX) and chlorinated VOCs (such as chlorinated ethenes and ethanes, and freons). CES reports that vapor stream concentrations ranging from 10 to 10,000 ppmv have been successfully treated with generally greater than 99 percent DREs (ENSR 2004d). Because efficiency does not depend on high temperatures, other benefits include rapid start-up and low operating costs, with much lower requirements for supplemental fuel or energy during treatment than required for thermal treatment alternatives. Korzekwa and others (1998) report DREs somewhat lower than 99 percent for pulsed corona reactors and determined that the amount of energy necessary for destruction is affected by the relative humidity of the gas stream (that is, higher humidity causes lower DREs). More significantly, their study shows that the amount of energy required to destroy VOCs is highly compound-specific. For example, freon requires more than an order of magnitude higher energy input than toluene under similar treatment conditions.

6.1.2 Developmental Status

Non-thermal plasma technology has the potential to compete with traditional off-gas treatment technologies because of its potential to operate for long periods without requiring much O&M and its potential to be scaled up to handle large contaminant loads (Chapman and others 1997). Although the technology has been the process of choice for the production of ozone in industrial settings for several years, it needs further development, refining, and marketing for use in SVE off-gas treatment applications.

The silent discharge plasma technology was originally developed by the U.S. Department of Energy's (DOE) Los Alamos National Laboratory (LANL) in the early 1990s. The technology was field tested on an SVE system at McClellan AFB from October 1995 to January 1996. In the test, cells were constructed of Pyrex® and sandwiched between electrodes. The Pyrex® cells provided the dielectric barrier. Forty such cells were connected in series to form the primary treatment chain during this field test of the silent discharge plasma equipment. Results indicated greater than 95 percent DREs for several chlorinated hydrocarbons. The process has not subsequently been successfully commercialized (ENSR 2004d).

The gas-phase corona technique has been used as an industrial pollution control technology for years to control NO_x, SO_x, and mercury compounds (among other pollutants) and is sometimes used in conjunction with electrostatic precipitators and electron beams. Performance information available for gas-phase corona technology, although limited, indicates that the technology is capable of achieving DREs of more than 99 percent for chlorinated VOCs with proper gas residence time and voltage within the reactor vessel.

In 1992, Battelle Pacific Northwest Laboratories (Battelle) completed bench-scale testing of the gas-phase corona technology. This testing demonstrated the ability of the corona reactor to destroy up to 1,500 ppmv TCE with DREs of greater than 99 percent. Battelle reported that DREs were found to be a function of residence time, concentration, and applied voltage (RTN 1999d). Later studies by Nunez and others (1993) revealed that compound-specific DREs could be correlated to the ionization potential (IP) of that compound. The lower the IP of a particular compound, the higher the DRE at constant operating conditions.

Battelle also conducted pilot-scale field testing of gas-phase corona technology for site remediation at the DOE Savannah River site in Aiken, South Carolina (see Section 6.1.3 below). This technology is being marketed for full-scale site remediation applications by CES in partnership with Battelle. In 1998, gas-phase corona technology was applied at bench scale for the treatment of SVE off-gases at the Silresim Superfund Site in Lowell, Massachusetts. The technology proved successful in destroying chlorinated and fluorinated contaminants but was not tested during subsequent treatment studies at the site. A pilot system is now developed and marketed by CES for treating automotive and diesel exhausts. CES has indicated that a full-scale demonstration of this technology will continue to be marketed, but to date, such a demonstration has not been performed (ENSR 2003a).

The other non-thermal plasma technologies (tunable hybrid plasma, electron beam, and low-pressure surface wave plasma) are not commercialized and are still in the research and development stages.

6.1.3 Performance

In 1993, Battelle continued bench-scale research of gas-phase corona technology and performed a pilot-scale test at the DOE Savannah River site in Aiken, South Carolina. The test was performed on TCE and PCE vapors from an SVE system at concentrations of 130 and 720 ppmv, respectively. The reported results show that DREs for TCE and PCE could be raised to greater than 99.9 percent for gas residence times of 1.8 and 7.7 seconds, respectively. DREs increased as the residence time increased (RTN 1999d).

Battelle has also tested this technology for a variety of other compounds. Table 6-1 summarizes typical DREs for the other compounds tested by Battelle. As the table shows, the technology was able to achieve 99 percent DREs or greater for several contaminants and greater than 95 percent DREs for all but one of the contaminants tested.

Table 6-1. Gas-Phase Corona Plasma Reactor Technology Results

Compound	Destruction and Removal Efficiency (%)
Overall	97
Acetone	97.9
Benzene	97.85[a]
Carbon tetrachloride	>99[a]
1,1-Dichloroethane	>96.6
1,2 Dichlorobenzene	>97.0
1,1-Dichloroethene	>97.4
cis-1,2-Dichloroethene	>95.3
Ethylbenzene	>96.3
GD (Nerve Agent)	>99.8[a]
Methane	>97[a]
Methylene chloride	95[a]
Naphthalene	>99.9[a]
Phosgene	99.84[a]
Tetrachlorothene	99.5 - 99.9[a]
1,1,1-Trichloroethane	95.4
1,2,4-Trimethylbenzene	>98.2
Trichlorotrifluoroethane	67[a]
Semivolatile organic compounds	>99.9
Trichloroethene	99.6 - 99.9[a]
Total nonmethane organic compounds	97.0
Xylenes	99.4
Others (hydrogen cyanide, etc.)	>99[a]

Note:
a Reported result obtained using a packed bed corona reactor
Source: RTN 1999d

The McClellan AFB study notes that average DREs as high as 97 percent were demonstrated with dehumidified and hydrogen-enriched influent in the silent discharge reactor. DREs dropped to less than 90 percent in the presence of significant humidity in the gas stream; therefore, the gas stream should be dehumidified for optimal operation (Chapman and others 1997). An electron beam bench-scale study at McClellan AFB indicated DREs of 93 to 99 percent for a mixed VOC and chlorinated VOC waste stream from an SVE off-gas (Chapman and others 1997). Non-thermal plasma technology has proven effective in treating a wide range of contaminants, including those shown in Table 6-1,

which are typical of SVE off-gases as well as for treating chlorofluorocarbons, SOx, NOx, and PCB surrogates.

At the current stage of development, the gas-phase corona technology is limited to relatively low flow rates (less than 20 cfm) for both industrial and remediation applications of single-unit systems. Systems can be designed with several corona reactors in parallel to increase treatment capacity. At the DOE Savannah River site, 21 parallel reactors achieved a maximum treatment rate of 105 scfm. Battelle indicates that plans have been developed for a commercial system capable of treating 250 cfm using six reactors (ENSR 2003a).

6.1.4 Engineering Considerations, Limitations, and Cost

As of the mid-1990s, none of the systems had been demonstrated at the scale necessary for practical remediation systems. The chief deficiency was that the systems only operated at about 10 scfm. Although this flow rate is low, certain SVE remediation systems operate in this range. Placing reactors in parallel can increase flow capacity.

A general disadvantage of the systems is that they may generate products that require further treatment. Depending on plasma temperature and input energy, free radicals formed within the plasma can sometimes recombine into compounds more toxic than their precursors. This situation results in the need for continuous monitoring of the exhaust products and, in many cases, the need for off-gas scrubbers. For specific applications, however, tailoring system conditions can result in very high DREs with a low probability that further off-gas treatment will be required (except for halogenated contaminants that result in acid formation). Contaminant destruction is linked to the treatment rate. For greater DREs, lower treatment rates (flow rates) may be required (RTN 1999d). Because the technology is not fully developed, not all potential problems associated with full-scale operation are well understood, especially with regard to full control of the process and the impact of corrosiveness.

To date, no significant environmental concerns are associated with this technology. Production of NOx and ozone is low to moderate. At higher temperatures (and power consumption), ozone production ceases but NOx and nitric acid production increases (RTN 1999a). No evidence has been found of the production of dioxin or furans with this treatment technology. The potential for production of toxic or carcinogenic compounds in the effluent stream depends on the influent compounds and therefore possible free radical combinations that can occur. The use of free radical scavengers such as hydrogen and water vapor in the influent minimizes the formation of such toxics. This technology's low operating temperatures generally preclude the formation of toxics.

As with most off-gas treatment technologies, the system produces halogen acids from halogenated contaminants and requires an acid scrubber when these contaminants are present. Depending on the other contaminants collected in the scrubber solution, the subsequent liquid waste stream may require testing and treatment prior to disposal. Dehumidification (air-water separator) condensate, if any, should be managed separately.

For gas-phase corona technology, power consumption is expected to be the primary operating cost, with consumption rates of 12 to 15 kilowatts at 25 to 30 kV. As with Cat-Ox, a significant capital cost could be for acid-resistant catalyst beads in the reactor. Although not necessary to the operation of the process, catalyst beads make the process more efficient and allow larger mass flow rates (higher concentrations, lower residence times, or both), thereby allowing smaller reaction vessel size. The unit cost of gas-phase corona technology is also very dependent on the contaminant mass loading. Cummings and Booth (1997) used data obtained from field testing of the corona technology and additional data provided by Battelle to estimate the unit cost (price per pound) of off-gas treatment by gas-phase corona technology over a range of influent concentrations and flow rates. The calculated estimates ranged from approximately $1 per pound at a 500-cfm flow rate and 1,000-ppmv influent vapor concentration to $34 per pound for a 100-cfm flow rate and 50-ppmv influent vapor concentration (the influent vapor stream was assumed to contain a ratio of 70 percent PCE to 30 percent TCE).

These estimates are supported by the data presented by Chapman and others (1997) from field testing of the silent discharge plasma technology (which is almost identical to the gas-phase corona technology) at McClellan AFB in 1995 and 1996. At a relatively low contaminant mass loading rate of 0.05 kilogram per hour, the operating costs were estimated to be about four times as great as for a Cat-Ox because of energy requirements. Capital costs were estimated to be double those of a Cat-Ox with the same capacity. Energy costs are a primary challenge for this non-thermal plasma technology.

Costs are contaminant-specific; the lower the contaminant bond strength (IP) and gas stream loading rate, the lower the cost (RTN 1999a). Conversely, cost information provided by CES indicates that at a relatively high contaminant mass loading rate of approximately 6 kilograms per hour of benzene (equivalent to SVE treatment of a 2,000-ppm influent stream at a 500-cfm flow rate), the cost of non-thermal plasma treatment could be approximately one-fourth that of Cat-Ox treatment (ENSR 2003a).

Taking into account all capital and O&M costs, FRTR (2004) recently estimated that gas-phase corona technology costs $10 per pound of contaminant. It is clear from the wide variations in estimates that additional data are necessary to develop a better understanding of costs relative to performance and associated limitations.

Developers of this technology are listed below. This list is not meant to be comprehensive and was developed from mention in literature and from Web sites providing descriptions of technologies applicable to SVE off-gas treatment. Mention of trade names or commercial products does not constitute endorsement or recommendation for use.

- Current Environmental Solutions; Kennewick, WA; gas-phase corona; www.cesiweb.com
- ENV America; Irvine, CA; silent discharge plasma; www.envamerica.com
- Los Alamos National Laboratory; Dr. Louis A. Rosocha; gas-phase corona; e-mail address: rosocha@lanl.gov

- Thermo Electron, Inc.; Waltham, MA; tunable hybrid plasma; www.thermo.com
- First Point Scientific, Inc.; Agoura Hills, CA; electron beam and corona discharge; www.firstpsi.com

6.2 Photolytic and Photocatalytic Technologies

Light energy in the UV wavelength spectrum can be used to oxidize or otherwise break down vapor-phase organic contaminants in air streams. Two related processes, photolytic destruction and photocatalytic destruction, use this phenomenon to treat off-gases generated from SVE systems. These two processes have also been proposed to improve general indoor air quality by removing VOCs and tobacco smoke from the air as well as to mitigate NO_x in industrial flue gas streams (U.S. EPA 2000a, b, c, and d). Although these proposals are encouraging, these technologies have not been fully developed or widely used for SVE off-gas treatment applications.

6.2.1 Technology Description and Applicability

Both photolytic and photocatalytic destruction technologies use an ionization source of UV light or near-UV light (light having a wavelength of 150 to 350 nanometers [nm]) to ionize components of a vapor stream (such as oxygen and VOCs), causing the formation of reactive free radicals. Other wavelengths could provide more energetic photons for higher-bonding energy compounds, but for the purpose of destroying VOCs and chlorinated VOCs, the wavelength ranges of UV light and near-UV light are sufficient.

In photolytic destruction systems, radicals are formed in reactors made of quartz. These highly energetic free radicals then recombine to form mostly harmless products such as water vapor and carbon dioxide. In addition to the UV energy source and the quartz reactor, photolytic destruction can also require follow-on treatment processes to manage other products that are formed. For example, oxygen radicals can combine with nitrogen (from air) to form NO_x. Also, as with other technologies, destruction of chlorinated VOCs produces halogenated acids (such as hydrochloric acid). The less desirable reaction byproducts may be released directly to ambient air at small concentrations or be removed by equipment such as acid scrubbers.

Photocatalytic processes similarly use UV light as an ionization source to create free radicals but also use a catalyst to promote reactions. In this process, radicals are formed either in the gas stream (when the contaminant molecule absorbs the UV light energy directly) or when the influent vapor stream contacts the catalyst (usually TiO_2). The catalyst is activated by the UV light energy. The radicals then recombine to form water vapor, carbon dioxide, and, if chlorinated VOCs are treated, halogenated acids.

The process components of UV oxidation systems vary depending on the technology developer and whether photolytic or photocatalytic processes are used. One photolytic destruction system developed

by Process Technologies, Inc. (PTI), feeds off-gas from an SVE system to a sorption chamber containing a fluidized bed of adsorbent material. In the sorption chamber, the contaminants are prepared for photolysis by concentrating the vapor stream. The adsorbent material is continuously moved to a separate chamber where the VOCs are desorbed from the adsorbent by steam stripping. Ultimately, the adsorbent must be replaced. The VOC-laden air stream resulting from the steam stripping is sent to a reaction chamber with a special cement liner for irradiation with UV light in the 150- to 254-nm wavelength range. The UV light generates free radicals and destroys the VOCs, converting them to carbon dioxide and water.

A representative implementation of a photocatalytic system, developed by Matrix Photocatalytic, Inc. (no longer in business), feeds off-gas from an SVE system directly into a reaction chamber. The off-gas contacts a TiO_2-coated fiberglass open-cell mesh in the reaction chamber and becomes irradiated with UV light, which causes free radicals to form. Generally, the mesh is wrapped around the UV lamp and the air stream flows between the UV lamp and the catalyst mesh. Other photocatalytic systems use reaction vessels containing patented catalyst beads spread on trays irradiated by a UV lamp (RTN 1999a). In addition, a photocatalytic system, developed by Purifics ES Inc., uses the TiO_2 catalyst in a slurry form (Purifics 2006).

Photolytic and photocatalytic technologies effectively treat a broad range of halogenated and non-halogenated VOCs, including PCE, TCE, and vinyl chloride, which are common SVE off-gas components. Other VOCs that can be destroyed by these processes include aromatic and aliphatic hydrocarbons, alcohols, ethers, ketones, and aldehydes. Photolytic technology works best on concentrated VOC waste streams (1 to 3,000 ppmv) at low flow rates; therefore, this technology is applicable for some SVE off-gas treatment scenarios.

6.2.2 Developmental Status

Research and development on photolytic and photocatalytic technologies have advanced to the point that the technologies are used for industrial air treatment; however, no operating SVE systems appear to be using UV technologies for off-gas treatment. However, photolytic and photocatalytic technologies have been tested on several SVE off-gas streams and have performed well. Examples of successful demonstrations of photolytic and photocatalytic technologies are described below. Also, photocatalytic technologies are widely used for treating water in industrial and remediation applications.

6.2.2.1 Photolytic Treatment

The PTI photolytic destruction technology was tested as part of the U.S. Navy Environmental Leadership Program at Naval Air Station (NAS) North Island's Site 9 SVE system. The system was installed to treat a 250-cfm slip stream from the operating SVE system already installed on site. Compounds treated in the system included halogenated and non-halogenated VOCs, such as 1,2-DCE, TCE, PCE, toluene, and octane. During the 4-month test, the system successfully treated VOCs in the SVE off-gas from an average concentration of 192 ppmv to below the maximum allowable

emissions of 25 ppmv. The average total DRE for VOCs was 95 percent. The U.S. Navy estimated the cost of scaling up the system to 3,000 scfm to treat all SVE off-gas from NAS North Island's Site 9 would be $3.77 per pound of VOCs treated (U.S. Navy 2002). PTI's system had similar positive results in the mid-1990s at other test sites, including McClellan AFB in California and Hill AFB in Utah; however, PTI is no longer in business, and its technology is not currently commercially marketed.

In October 1991, Thermatrix began a field test of its photolytic oxidation technology at the Lawrence Livermore National Laboratory Superfund site in California under the Superfund Innovative Technology Evaluation (SITE) Demonstration Program. The photolytic process treated flows of up to 500 cfm and used a xenon pulsed-plasma flash lamp to emit UV light at high densities. Initial TCE concentrations were approximately 250 ppmv and were reduced by more than 99 percent under all conditions except when the lowest flash frequencies and fewest lamps were used (U.S. EPA 1993a).

6.2.2.2 Photocatalytic Treatment

The AIR-I process developed by KSE, Inc. (KSE) is an adsorption integrated reaction in which a contaminated air stream flows into a photocatalytic reactor where VOCs are trapped on the surface of a proprietary catalytic adsorbent. This process was successfully tested at the laboratory scale on chlorinated VOCs at inlet concentrations of 1 to 3,000 ppmv. The process was then demonstrated as part of a groundwater remediation demonstration project at Dover AFB in Delaware, where effluent air from a groundwater stripper was treated. Results indicated over 99 percent removal of DCA from air containing 1 ppmv and saturated with water vapor.

The photocatalytic destruction process has been tested for SVE off-gas treatment during remediation demonstrations. KSE's AIR-II process was accepted into the SITE Emerging Technology Program in 1995. This process was initially evaluated at full-scale operation for treating SVE off-gas at Loring AFB. The DRE for PCE exceeded 99.8 percent (U.S. EPA 2005a). A study at the former National Environmental Test facility at McClellan AFB was conducted from October 1995 to January 1996. This study demonstrated that KSE's AIR-II process had VOC DREs as high as 98 percent.

Recently, KSE conducted research under the National Institute of Environmental Health and Sciences, Superfund Basic Research Program to evaluate TCE destruction and byproducts of their AIR process. More than 40 different catalysts containing copper, manganese, cerium, cobalt, tungsten, TiO_2, tin oxide, and noble metals such as platinum were included in the study. The research brief for this study (number 131) can be found at http://www-apps.niehs.nih.gov/sbrp/researchbriefs.

Another demonstration project was conducted at the Stamina Mills Superfund site in North Smithfield, Rhode Island, from August to October 1999. A 700-scfm photocatalytic oxidizer developed by KSE and manufactured by Trojan Technologies, Inc. (Trojan), treated SVE off-gases containing primarily TCE at influent concentrations of 10 to 78 ppmv. DREs exceeded 99.6 percent for TCE, even at a maximum flow rate of 0.72 lb/hr. Unexpectedly, however, chloroform was emitted as a byproduct of

the reaction. KSE subsequently reported that chloroform formation can be reduced through the use of different photocatalysts or reactor configurations (U.S. EPA 2001a).

The photocatalytic technology has been commercialized by a number of companies, including KSE through its licensee, Trojan; Purifics ES Inc.; and Zentox Corporation. Trojan reported fielding four systems for industrial applications and providing quotes on dozens of others; however, Trojan is not currently constructing or selling systems for SVE off-gas treatment (U.S. EPA 2001a). Purifics ES Inc. reports a number of photocatalytic deployments; however, almost all of these applications are for treating ground water or process water (Purifics 2006).

More novel ideas being evaluated for photocatalytic systems include coating glass fibers with TiO_2 and filling the reaction vessel with UV-lit fibers. Another approach being researched is a solar-powered version in which UV light from the sun activates the TiO_2.

6.2.3 Performance

Table 6-2 summarizes data from KSE for its photocatalytic technology and patented catalyst. This mixture of chemicals may not accurately reflect a typical mixture or many of the individual compounds often present in SVE off-gases.

Table 6-2. Representative Destruction and Removal Efficiencies for Photocatalytic Treatment of Volatile Organic Compound-Contaminated Air

Compound	Destruction and Removal Efficiency (%)
Average total volatile organic compounds	95 - >99
Dichloroethene	>99
1,2- Dichloroethane	>99
Formaldehyde	100
Acetaldehyde	99
Trichloroethene	84 - >99
1,1,1- Trichloroethane	>99
Toluene	96
Vinyl chloride	>99
Hexane	99
Carbon monoxide	94
Ammonia	100

Source: RTN 1999e

During the first McClellan AFB project, PTI's photolytic system achieved SVE off-gas VOC DREs as high as 98 percent under high-concentration, low flow-rate conditions. The technology was shown to be effective in treating a wide range of contaminants. Table 6-3 summarizes the VOCs treated for this demonstration and DREs for each contaminant.

Table 6-3. Destruction and Removal Efficiencies for Photolytic Treatment of Soil Vapor Extraction Contaminants from McClellan Air Force Base

Compound	Destruction and Removal Efficiency (%)
Average total volatile organic compounds	98
1,1- Dichloroethane	>81.7
1,1-Dichloroethene	>85.7
cis-1,2-Dichloroethene	>83.4
Ethylbenzene	>87.7
Methylene chloride	>67.4
Toluene	>98.6
Trichloroethene	>99.5
1,1,1-Trichloroethane	84.5
Xylenes	>97.7
1,2,4-Trimethylbenzene	>95.3
Methylisobutylketone	>95.7
Acetone	>99.9
Semivolatile organic compounds	97.9

Source: Chapman and others 1997

Photolytic and TiO_2-based photocatalytic oxidation does not effectively destroy long-chain (greater than six carbon atoms) alkanes. When TiO_2 catalysts are used, the alkanes partially oxidize and then foul the catalysts. This situation may not apply to the patented Trojan/KSE catalysts, which are not primarily composed of TiO_2. The technologies have not been extensively tested on substituted aromatics and seem to have lower DREs for BTEX-like compounds. To treat compounds with higher energies of dissociation (such as TCA and methylene chloride), the energy of the UV light photons must be increased (Chapman and others 1997). At influent temperatures above about 150 °F, the efficiency of the UV lamps drops. Tables 6-2 and 6-3 indicate how DREs for different compounds vary for a particular application and off-gas stream. For example, the McClellan AFB photolytic DRE for TCE was greater than 99 percent, but the DREs for methylene chloride and TCA were less than 90 percent, which may be insufficient at some sites to meet performance standards.

Overall, photolytic and photocatalytic technologies have low environmental impact (minimal formation of waste byproducts), which makes them an attractive SVE vapor treatment method. In early tests, however, a tendency was noted for the process to produce low concentrations of phosgene as the residence time of chlorinated contaminant vapor in the reactor increased, although dangerous levels were never reached (CDC 2005).

Over time, these technologies have become relatively simple to implement and generally do not produce waste products that require further treatment. Hydrochloric acid formed from the treatment of chlorinated VOCs may require removal by an acid scrubber. Alternatively, hydrochloric acid may be treated by absorption and neutralization in cement liners used in the reactors. The cement liner would ultimately become saturated with neutralized halogens and require replacement. Waste from the liner can be disposed of as solid waste.

The effluent from the oxidation/destruction chamber is generally benign enough for direct release to the atmosphere; however, the potential generation of other waste products (such as chloroform) may represent a disadvantage with this technology. If an adsorbent is used as a fluidized bed in the process, it can be regenerated and ultimately disposed of as solid waste.

6.2.4 Engineering Considerations, Limitations, and Cost

Photolytic and photocatalytic systems require relatively little maintenance or replacement parts. The systems are designed for unattended operation, and any wastes produced may be readily managed. Catalysts typically last 2 or 3 years, and UV lamps, which are widely available and inexpensive, require replacement approximately annually.

There are engineering concerns associated with photolytic and photocatalytic technologies. In photocatalytic systems, the UV lamps must illuminate and activate the catalyst, which must be thin enough for the UV light to penetrate it. Large influent mass loadings therefore require large catalytic surface areas for photocatalytic oxidation to occur. In addition, the influent must be filtered to prevent the degradation of the catalyst by particulates entrained in the vapor stream. The internal equipment of photolytic and photocatalytic systems is sometimes difficult to reach, which could prove troublesome if maintenance or periodic replenishment is required. In larger systems that process larger mass loads of contaminants, reaction vessels may require cooling systems because catalytic reactions generate heat. Cooling water may be considered a waste stream but could be recirculated.

Although the basic photo-energetic concept of these technologies is relatively straightforward, the related processes used by some systems can add complexity. For example, systems that temporarily fix contaminants onto adsorbents require intricate air-flow configurations to properly fluidize the bed. These same types of systems, which then use steam to regenerate the adsorbents, must be engineered so that the steam does not affect photolysis. Further, energy required to generate the steam adds cost. Depending on the system design and generation of halogen acids, periodic replacement and disposal of liners and adsorbents may be necessary. Finally, more energy and

additional equipment may be needed for UV light production and supplemental water cooling to remove heat (if larger vessels or higher mass loadings are used).

The photolytic destruction process is not cost-effective compared to activated carbon treatment for off-gases with contaminant inlet concentrations of less than 100 ppm. Energy costs to operate the UV lamps are the principal economic driver. The technology appears to be relatively independent of contaminant loading except for technologies that require replacement of reactor liners. Operating costs for photolytic systems are about two-and-a-half times as great as for an acid-resistant Cat-Ox system, because of energy costs. Capital costs for photolytic systems are estimated to be twice those of Cat-Ox systems of the same capacity (Chapman and others 1997).

Compared to thermal Cat-Ox systems, photocatalytic technology has higher capital costs but lower O&M costs according to a former vendor of this technology (RTN 1999a). Operating energy costs may be sufficiently lower so that the higher capital cost is recouped over the life of the unit. For one photocatalytic technology project, $1.5 million was reportedly saved over the life of the project compared to the use of GAC (Brunet and others 1999). However, because few examples of this technology have been used for SVE off-gas treatment, the life of such a unit and its components cannot be reliably stated. Maintenance costs are expected to be small and are mostly associated with yearly replacement of UV lamps and biennial replacement of catalyst.

Developers of this technology are listed below. This list is not meant to be comprehensive and was developed from mention in literature and from Web sites providing descriptions of technologies applicable to SVE off-gas treatment. Mention of trade names or commercial products does not constitute endorsement or recommendation for use.

- KSE Inc.; Amherst, MA; photocatalytic; www.kse-online.com
- Purifics ES Inc.; London, Ontario, Canada; photocatalytic; www.purifics.com
- Trojan Technologies Inc.; London, Ontario, Canada; photocatalytic; www.trojanuv.com
- Zentox Corporation; Newport News, VA; photocatalytic; www.zentox.com

6.3 Membrane Separation Technologies

Membrane separation technologies have limited use for treating SVE off-gases from site remediation applications. Membrane separation techniques are used extensively in industrial applications to remove VOCs from process air emissions. One major use of this technology is to separate carbon dioxide from natural gas. The membrane separation process combines compression and condensation with membrane separation, and results in significantly more solvent recovery than compression and condensation alone.

6.3.1 Technology Description and Applicability

Membrane separation technology involves separation of VOCs from the contaminated vapor stream by passing the stream through a membrane designed to be up to 100 times more permeable to organic molecules than to air. Membrane separation systems are typically spiral-wound modules ranging from 4 to 8 inches in diameter and 3 feet in length. As the feed gas enters the module, a partial vacuum on the other side of the membrane sheet draws the organic vapors through the spiral membrane to a central permeate collection pipe. The purified air stream excluded by the membrane exits the separator. This stream, sometimes called the "residue stream," may require additional treatment by activated carbon prior to discharge to the atmosphere (MTR 2004).

Membrane separation systems can be configured either as single-stage systems, which are typically used to treat concentrated vapor streams, or as two-stage systems, which are used to treat more dilute vapor streams. In the single-stage system, the contaminated vapor stream is initially routed through a condenser, where a portion of the organic vapor is cooled and condensed. The liquid condensate is recovered for recycling or reuse. The uncondensed air-vapor mixture is then routed to a membrane to separate the VOCs from the air stream. Two effluent streams are generated from the membrane: a purified stream containing low levels of VOC vapor that may be discharged to the atmosphere or further treated by activated carbon, and a concentrated vapor stream that is recirculated back to the condenser. It is uncommon for SVE off-gas streams to be concentrated enough for treatment by a single-stage system; however, SVE off-gas for systems treating substantial amounts of NAPL and significant VOC concentrations may be appropriate for such treatment.

Two-stage systems are used when the vapor concentration in the off-gas stream is too dilute for an effective initial condensation step prior to separation. As the air-vapor mixture passes through the first of two membranes, most of the VOCs are separated from the clean air, which is discharged to the atmosphere. The VOC-containing permeate is then compressed and condensed, typically producing water and minor amounts of liquid VOCs. The bleed stream from the condenser passes through a second membrane that again produces a clean air discharge and a highly concentrated VOC permeate that is compressed and condensed. The liquid condensate from this second stage may be suitable for recycling, and the bleed stream from the second condenser is recirculated through the first membrane. In general, two-stage systems are too costly to be practical for most SVE applications. Figure 6-2 shows a typical two-stage membrane separation system schematic diagram.

According to Membrane Technology and Research Inc. (MTR), its VaporSep® technology can treat a variety of VOCs, including chlorinated and non-chlorinated VOCs typically associated with SVE off-gases. The single-stage membrane separation process was initially developed to remove and recover gasoline hydrocarbon vapors from fuel storage tanks at retail service stations. Other commercial applications involve recovery of vinyl chloride monomer from industrial processes. In these situations, the VaporSep® system can recover up to 100 lb/hr of the monomer. The technology can also be used to treat a wide range of vapor concentrations, which may make it applicable to both start-up and long-term SVE off-gas treatment applications. Compounds that can be recovered include common SVE off-

gas constituents such as benzene, carbon tetrachloride, chlorofluorocarbons, methanol, methylene chloride, PCE, TCA, TCE, toluene, and vinyl chloride.

Figure 6-2. Typical Two-Stage Membrane Separation System

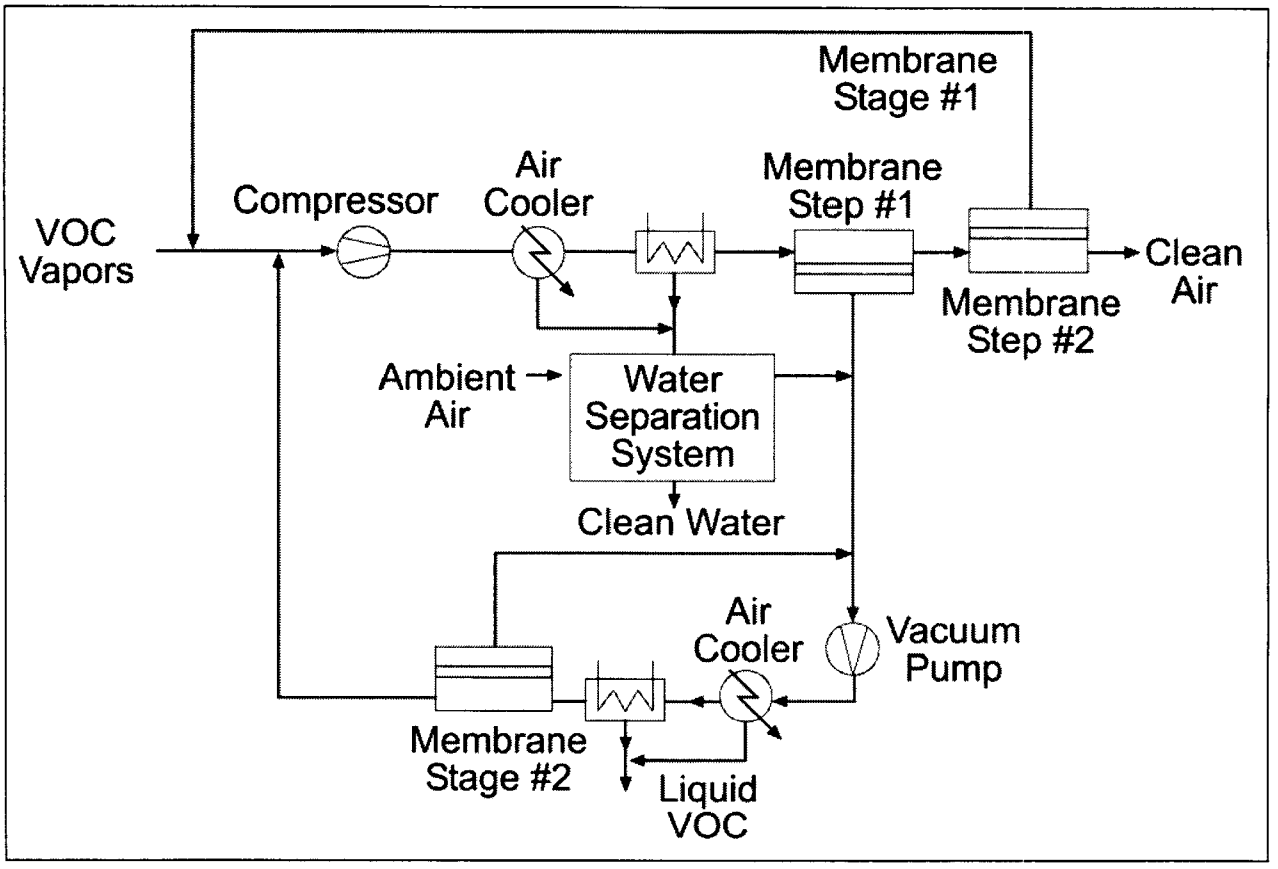

Source: DOE 2001

According to MTR, the VaporSep® system works best at influent concentrations of 100 to 10,000 ppmv. Single-stage systems are best suited for concentrations exceeding 1,000 ppmv. Two-stage systems can be used to treat influent vapor concentrations less than 1,000 ppmv. Membrane separation systems have been designed for industrial applications to treat vapor flow rates of up to 3,500 scfm and have been tested at influent concentrations of up to 100,000 ppmv; therefore, the technology should be adaptable for larger SVE systems, but treatment from typical low flow-rate SVE systems (less than 200 cfm) may not be cost-effective.

6.3.2 Developmental Status

A two-stage VaporSep® system was tested in a pilot-scale application as part of the U.S. EPA SITE Demonstration Program in 1994 (U.S. EPA 1994). The technology was also field-demonstrated on a

SVE system removing carbon tetrachloride and chloroform from subsurface soils at the DOE Hanford Reservation site in Richland, Washington. The influent concentrations were 1,000 ppmv, and the observed DRE was 95 percent (FRTR 2004). This technology was also tested for a SVE system at McClellan AFB in California. The demonstration at this site was conducted from March 1999 through May 2000, and initial chlorinated VOC concentrations ranged from 23 to 101 ppm (DOE 2001). Commercial installations of VaporSep® systems have been exclusively for industrial applications.

6.3.3 Performance

This technology has limited use in treating off-gases from site remediation applications, because it becomes more cost-effective when solvent recovery is desirable. During the U.S. EPA SITE study, the average DREs for perchloroethylene, hexane, and iso-octane were approximately 90 percent at influent concentrations ranging from 43 to 890 ppmv (U.S. EPA 1994). Depending on performance standards, these reductions may not yield acceptable concentration levels. The concentrations of organic compounds in the purified air stream are generally low enough for discharge to the atmosphere but can be further treated by other methods, if necessary. During the DOE demonstration, DREs of more than 95 percent were achieved by a system treating a stream containing 200 to 1,000 ppmv of carbon tetrachloride (FRTR 2004). The demonstration at McClellan AFB reduced chlorinated VOC concentrations to less than 10 ppm before performance was impacted due to the presence of carbon dioxide, which was not accounted for in the design, and mechanical issues (the presence of oil and water in the system) (DOE 2001).

6.3.4 Engineering Considerations, Limitations, and Costs

As discussed in Section 6.3.1, single-stage systems are best suited for influent concentrations exceeding 1,000 ppmv (up to 10,000 ppmv). The capacity of current systems ranges from 1 to 100 scfm, although MTR has constructed a unit capable of processing up to 140 scfm of feed air. Two-stage systems can be used to treat influent vapor concentrations less than 100 ppmv; however, at these levels, carbon adsorption may be more cost-effective because low-volume, low-concentration conditions do not yield significant solvent recoveries.

The capital cost of the two-stage system tested at the DOE Hanford Reservation site capable of handling 7,000 scfm was approximately $2.5 million. This system treated SVE concentrations of 200 to 1,000 ppmv of carbon tetrachloride and chloroform. More than 95 percent of the carbon tetrachloride was recovered as liquid, and the remaining VOCs (2 to 25 ppmv) were treated using activated carbon prior to discharge. More generalized capital costs are expected to range from $400 to $1,000 per scfm of system capacity, with the cost per unit volume generally decreasing as treatment capacity increases (MTR 2004).

O&M costs for the DOE Hanford Reservation site system were reportedly $6,000 per year for actual membrane maintenance and for assumed replacement every 3 years. At the test site, overall costs

were estimated to be $2,000 to $5,000 per pound of VOCs recovered, although the complete life cycle of the technology for this application has not been evaluated (FRTR 2004). Operation costs are generally quoted as $0.50 to $1.00 per 1,000 scfm treated. Costs associated with the demonstration at McClellan AFB (with a design flow rate of 100 scfm) were scaled up for a 500-scfm membrane separation system. For the larger system, estimated capital costs were $660,000 and O&M costs were $675,000 per year assuming membrane replacement every 3 years (DOE 2001).

The only known developer of this technology is listed below. This list is not meant to be comprehensive and was developed from mention in literature and from Web sites providing descriptions of technologies applicable to SVE off-gas treatment. Mention of trade names or commercial products does not constitute endorsement or recommendation for use.

- Membrane Technology and Research, Inc.; Menlo Park, CA; VaporSep® Membrane; www.mtrinc.com

6.4 Other Technologies

Gas absorption and vapor condensation technologies, with further development, are two other technologies that may be applicable under certain circumstances for treating SVE off-gas. These technologies are used in industrial applications and in some cases for regenerating activated carbon or other adsorbents. In other cases, they may be combined with other technologies already presented in this document. Because gas absorption and vapor condensation technologies are not frequently used, detailed information with respect to the evaluation criteria discussed in Section 1.6 was not available. This section presents a description of each technology and, when available, a brief discussion of technology performance during field applications.

6.4.1 Gas Absorption Technologies

In gas absorption processes, contaminant vapors are dissolved into a liquid solution. This process is referred to as "scrubbing" and is widely used in both industrial and site remediation applications as an ancillary treatment process to eliminate acid gases formed during thermal treatment; however, the technology is rarely used as the primary treatment method for site remediation off-gases.

Absorption and adsorption are related physical-chemical processes. The fundamental difference between absorption and adsorption is that absorption involves the dissolving and/or mixing of the contaminant into the absorbent (usually liquid) medium, and adsorption involves the attraction and adhering of vapor or liquid to the surface of an adsorbent medium such as activated carbon. During the gas absorption process, contaminated vapor flows through a column in a counter-current direction to that of a low-volatility scrubbing solution (solvent). The scrubbing solution is usually distributed through the column as a spray or mist to maximize contact between the vapor and liquid phases. The concentration gradient between the gas and liquid phases and vapor-liquid equilibrium processes drive

dissolution of the gas-phase contaminants into the liquid solution; therefore, for this approach to work, it is necessary to select a suitable solvent for the chemical(s) targeted for recovery or removal from the air stream.

In some cases, the contaminants in the vapor stream chemically react with a component of the absorbent solution to form chemically inert compounds (for example, acid gases absorbed into a caustic solution). In other cases, the contaminant simply dissolves into the absorbent solution, which requires further treatment or disposal. Gas absorption system configurations can include packed-tower, sieve plate/tray-tower, Venturi, and fluidized bed configurations. Some solvents used include water, mineral oils, and non-volatile petroleum oils. The most typical solvent used in absorption applications is water, which works well for polar compounds but not for most compounds targeted in SVE remedies. Specialized, low-volatility, non-polar organic solvents can also be used, and these types of solvents are most applicable to SVE off-gas treatment applications.

In 1989, the Chemtact™ absorption process marketed by Quad Environmental Technologies Corporation was used as part of a demonstration project. In this technology, a proprietary chemical absorbent solution treats the contaminated vapor stream in a once-through (non-regenerable) absorption process. The liquid absorbent is dispersed through the reaction chamber as finely atomized droplets (less than 10 microns in diameter). In the 1989 demonstration, mobile Chemtact™ systems capable of treating 800 to 2,500 cfm treated a vapor stream containing unspecified hydrocarbons plus phenol and formaldehyde. The process was reported to have achieved 85 to 100 percent DREs for the hydrocarbons and 94 percent DREs for both phenol and formaldehyde. During other projects, the DRE for benzene was effectively 100 percent; however, the toluene DRE was only 50 to 93 percent. The Chemtact™ technology may no longer be commercially available. Attempts to contact the vendor have been unsuccessful (RTN 1999i).

In the early 1990s, the University of Connecticut developed a process called "Contaminant Absorption and Recovery." This process involves absorption of vapor-phase contaminants using a non-volatile liquid solvent (typically corn oil). The liquid solvent then passes through a second column, where the organic contaminants are stripped from the solvent at elevated temperatures and reduced pressure. This second process produces a low-flow vapor stream that can be condensed, and the liquid contaminants are recovered for recycling or disposal. The solvent solution can then be recirculated through the process (RTN 1999j). Water entrained in the soil vapor decreases the efficiency of this technology; therefore, SVE systems would need to include an efficient air-water separator to avoid this problem.

Most research on this technology has been at the laboratory scale; however, a diffused bubble-contactor and a packed column contactor were each investigated for pilot-scale off-gas treatment at a sparge-and-vent remediation site. Off-gas VOCs from the system were successfully treated using both contactors. The TCE DRE was greater than 95 percent for both configurations. A patent was issued to the University of Connecticut for this technology in 1993, and a single field-scale application was conducted at that time; however, this technology was not subsequently commercialized (RTN 1999j).

One developer of this technology is listed below. This list is not meant to be comprehensive and was developed from mention in literature and from Web sites providing descriptions of technologies applicable to SVE off-gas treatment. Mention of trade names or commercial products does not constitute endorsement or recommendation for use.

- Environmental Research Institute, University of Connecticut; Storrs, CT

In addition, gas absorption systems are commonly available from many vendors that serve manufacturing installations and the chemical processing industry.

6.4.2 Vapor Condensation Technologies

When treating contaminated vapor streams, the vapors can be cooled to condense the contaminants using a stand-alone control system or as an enhancement to other off-gas treatment technologies. Removing water vapor from the off-gas (as condensate) enhances the effectiveness of subsequent off-gas treatment methods. Stand-alone condensation systems are typically used when the air stream contains concentrations of contaminants greater than 5,000 ppm (Govind and others 1994) or when it is economically desirable to recover the organic contaminant contained in the vapor stream for reuse or recycling (similar to vapor recovery systems for industrial processes). This process is generally not applied to SVE systems because the recovered products are generally not economically viable; however, if concentrations during the initial stages of an SVE system are high or the contaminated stream is not a mixture but consists of a single chemical, this process could be applicable. Particular applications that use condensation for SVE treatment generally use heat (such as steam or electrical heat) to enhance the effectiveness of SVE. The off-gases extracted by such systems are generally hot and have high vapor concentrations.

Other configurations of vapor condensation include adsorbing or otherwise concentrating compounds from low-concentration vapors using another technology and then performing condensation for recovery for disposal or recycling as a feedstock into an ongoing industrial process (such as at an oil refinery). Recovered chemicals can also be used as a supplemental fuel source for off-gas treatment such as with ICE (see Section 3.2).

In a condensation system, the contaminant-laden vapor stream is cooled below the dew point of the contaminants (assuming that the VOCs have sufficiently high dew points to allow condensation). Depending on the composition and concentration of contaminants, the temperature required for condensation may be extremely low. The vapor-phase contaminants, once condensed, can be collected for recycling or disposal. Methods used to cool the vapor stream may include the use of liquid nitrogen, mechanical chilling, or a combination of the two. The primary advantage of using a vapor condensation system for SVE off-gas treatment is that such a system is quite safe, even when applied to off-gases whose concentrations approach or exceed the LELs of the constituents. In contrast, oxidation systems must have significant protection and safeguards to ensure safe operation at LEL-range concentrations.

Pure-phase product recovery is possible using vapor condensation for SVE off-gas treatment; however, materials that are readily condensable do not usually volatilize well at typical soil temperatures. This technology is better suited to applications where heating is used to increase the hydrocarbon removal rate from the subsurface.

Although vapor condensation technologies are not commonly used for SVE systems, demonstrations of this application have been performed. The BRAYSORB system marketed by NUCON International, Inc. (NUCON), was demonstrated at the DOE Savannah River site in South Carolina in 1993 and at a Chevron facility in California in 1994. In the BRAYSORB process, the low-concentration vapor stream is adsorbed onto activated carbon to concentrate the vapor stream prior to condensation. Two carbon units are provided in series. Initially, only the first carbon canister is used until the concentration in the effluent exceeds a predetermined level. When saturation of the first carbon unit is achieved, the unit is taken off line for regeneration and the second carbon unit is used. This technology is efficient only for compounds that are reasonably well adsorbed on activated carbon and subsequently can be stripped at temperatures lower than 350 °F. The typical flow rate for this system is 8,000 to 10,000 scfm.

During regeneration, hot nitrogen is passed through the spent carbon unit and solvents are desorbed from the carbon. The nitrogen and solvent vapors are compressed and cooled using a regenerative heat exchanger. Following the heat exchanger is a separator, where greater than 90 percent of the solvents in the vapor stream are condensed. Additional solvent is condensed by passing it through the compressor. After regeneration, the carbon bed is cooled and made ready for adsorption (RTN 1999f). NUCON has developed a mobile carbon regeneration system to perform the necessary regenerations.

At the DOE Savannah River site, vapor condensation used for the recovery of SVE off-gas from treatment of soils impacted by machine shop wastes was performed at a flow rate of 250 scfm using a mobile unit. TCE and PCE concentrations in the influent were 2,000 and 5,000 ppm, respectively. Treatment using vapor condensation resulted in effluent TCE and PCE concentrations of 20 and 50 ppm, respectively, or DREs of 99 percent (although the actual solvent recovery efficiency was not reported). Another application occurred at a Chevron site (a gasoline service station with an existing SVE system). The off-gas was treated at 500 scfm with an influent concentration of total BTEX of 900 ppm. The resultant effluent had a BTEX concentration of 20 ppm, which correlates to a DRE of 98 percent, during an 18-month period (RTN 1999f).

This technology is considered to have low capital costs, because the absorber vessels can be constructed of less expensive materials. No corrosion results from condensing steam and soluble acids. This factor also reduces operating costs. Unlike conventional steam regeneration of activated carbon, no contaminated water stream is generated by this technology. Through the use of heat interchangers, this process results in reductions of up to 75 percent in energy requirements compared to conventional systems (NUCON 2005). Total costs for the DOE Savannah River site system (10 wells) were approximately $25,000 per well for operating costs and $125,000 per well for capital costs. Each regeneration performed at the Chevron site cost $1,800, and the total cost for the unit at the Chevron site was $32,400 (RTN 1999f).

The only known developer of this technology is listed below. This list is not meant to be comprehensive and was developed from mention in literature and from Web sites providing descriptions of technologies applicable to SVE off-gas treatment. Mention of trade names or commercial products does not constitute endorsement or recommendation for use.

- NUCON International Inc.; Columbus, OH; BRAYSORB process; www.nucon-int.com

In addition, vapor condensing equipment is commonly available from many vendors that serve manufacturing installations and the chemical processing industry.

7.0 SUMMARY

A variety of technologies are capable of treating off-gas from SVE remediation systems. By far, the most common types of off-gas treatment systems use activated carbon adsorption and thermal oxidation (primarily catalytic oxidation). Other commercially available but less frequently used technologies include biofiltration and ICEs. Emerging technologies have been explored for remediating SVE off-gas in recent years, although none have matured to become significant commercially available options.

This document presents available information for various technologies based on applicability, limitations, performance, engineering considerations, residuals management, cost and economics, and developmental status. This information is intended to present the state of the practice of off-gas treatment technologies for SVE systems. The information is also applicable to vapors generated from MPE and groundwater treatment systems. The document is intended to assist remediation project managers and engineers in evaluating and selecting appropriate off-gas treatment technologies for these systems. Project managers and engineers seeking guidance for the design and operation of such systems should consult engineering manuals or other specific guidance documents for specific technologies of interest (see Section 1.1 for examples).

Selection of the most appropriate off-gas treatment alternative is a function of the following factors:

- Types of contaminants present in the extracted vapor stream
- Vapor concentration(s)
- System flow rates
- Anticipated duration of system operation
- Local air emission and treatment requirements
- Estimates of how the off-gas concentration will change during remediation

Table 7-1 provides general concentration ranges of SVE off-gas applicable for commercially available technologies. As the table shows, more than one technology may be applicable for treating a specific off-gas. For example, SVE system off-gas concentrations of 500 ppmv of petroleum hydrocarbons (VOCs) could be treated by carbon adsorption, thermal oxidation, or biofiltration. Other less readily available technologies discussed in this report might also be applicable.

Table 7-1. Generalized Volatile Organic Compound Influent Concentration Ranges for Commercially Available Technologies

Technology	Influent Volatile Organic Compound Concentration (ppmv)
Carbon Adsorption	<5,000
Thermal Oxidation	100 – 4,000
Biofiltration	<1,000

Notes:

ppmv = Part per million by volume
Source: USACE 2002

In most instances, remediation practitioners evaluate and select thermal oxidation or carbon adsorption at sites with SVE systems. These two technologies are both robust, demonstrated, mature off-gas treatment methods that can treat a wide variety of contaminants. Compared to thermal oxidation or carbon adsorption, the other technologies presented in this document are generally cost prohibitive or are not sufficiently demonstrated for SVE off-gas treatment except under very specific circumstances.

Currently, selection of off-gas treatment technology is based on cost and operational considerations that differentiate thermal oxidation and carbon adsorption systems. Although many factors affect the cost of an off-gas treatment system, the general rule for selecting between thermal oxidation and carbon adsorption is that more dilute off-gases are more cost-effectively treated by carbon adsorption. Thermal oxidation becomes more cost-effective when off-gases contain higher concentrations of vapor contaminants. Table 7-2 summarizes evaluation factors for selecting thermal oxidation and carbon adsorption technologies.

Although thermal oxidation and carbon adsorption are currently the most common treatment technologies for SVE off-gas, some emerging technologies presented in this document have the potential to be cost-effective alternatives to thermal oxidation and carbon adsorption. In the future, cost-efficiency improvements or reports of new, positive experiences in applying these alternatives may result in their selection more frequently. With development, some of the emerging technologies, such as non-thermal plasma and photolytic technologies, have the potential to be cost-effective alternatives to thermal oxidation and carbon adsorption for SVE off-gas treatment.

Table 7-2. Evaluation Factors for Thermal Oxidation and Carbon Adsorption Technology Selection

Factor	Thermal Oxidation	Carbon Adsorption
Concentration	More commonly used for higher contaminant concentrations (> 500 ppmv); treatment costs per pound of contaminant decrease as VOC concentrations increase because less supplemental energy is required per pound removed	More frequently used for dilute vapor concentrations (< 1,000 ppmv); treatment costs per pound of contaminant tend to stay same or increase as concentration of vapors increase because carbon replacement frequency increases
O&M requirements	Tends to require more labor and more skilled labor to operate because of safety considerations	Tends to be simpler and less labor-intensive to operate and maintain unless vapor-phase concentrations are high and "breakthrough" occurs frequently
Safety	More safeguards necessary if it is possible for off-gases to reach high concentrations (significant fractions of the lower explosive limits of the contaminants in the vapor); formation of dioxins and furans is possible if not properly operated	Tends to be very safe under most conditions; however, high levels of ketones or similar compounds may pose a fire hazard
Chlorinated vs. non-chlorinated VOCs	Less commonly used for chlorinated VOCs because of formation of hydrochloric acid during vapor combustion, which requires special acid-resistant materials for piping and equipment after combustion chamber	Equally applicable to chlorinated and non-chlorinated VOCs; acid formation not typically an issue
Variety of compounds that can be treated	Except for acid formation during combustion of chlorinated VOCs, wide variety of compounds can be treated	Not all compounds adsorb well to activated carbon (depends on sorptive capacity); some common compounds (such as vinyl chloride) not readily treated; therefore, each compound in off-gas must be considered
Capital vs. O&M costs	Equipment significantly more expensive to purchase than carbon units; however, at high VOC concentrations, O&M costs lower than carbon units	Capital costs fairly low; O&M costs proportional to off-gas flow rates and vapor concentrations

Notes:

O&M = Operation and maintenance
ppmv = Part per million by volume
VOC = Volatile organic compound

8.0 REFERENCES

Agency for Toxic Substances and Disease Registry (ATSDR). 2001. "Health Consultation: Site Summary Outlining Public Health Issues from February 2001 Site Visit, Edwards Air Force Base, Los Angeles, Kern and San Bernardino Counties, California." May.

Air Force Center for Environmental Excellence (AFCEE). 1995. "A Performance and Cost Evaluation for Purus PADRE® Regenerative Resin System for the Treatment of Hydrocarbon Vapors from Fuel-Contaminated Soils." April.

AFCEE. 1998. "Final Comprehensive Technical Report for the Evaluation of Soil Vapor Extraction and Treatment using Internal Combustion Engine Technology." Technology Transfer Division. July.

Alley, E. Roberts, and Associates, Inc. (Alley). 1998. "Chapter 22, Incineration of Gaseous Emissions." *Air Quality Control Handbook.* Pages 22.1 through 22.26. McGraw Hill.

Alonso, C., and others. 1998. "Dynamic Mathematical Model for the Biodegradation of VOCs in a Biofilter: Biomass Accumulation Study." *Environmental Science and Technology*, Volume 32, Number 20. Pages 3118 through 3123.

Anguil Environmental Systems, Inc. (Anguil). 2004. "Anguil Environmental Systems." Product Literature. Huntington Environmental Systems and EPG Companies Inc. Accessed in August 2005. On-line Address: http://www.anguil.com

Archabal, S.R., and D.C. Downey. 1994. "A Performance and Cost Evaluation of Internal Combustion Engines for the Destruction of Hydrocarbon Vapors from Fuel-Contaminated Sites." AFCEE Technology Transfer Division. December.

Archabal, and others. 1997a. "The Internal Combustion Engine as a Low-Cost Soil Vapor Treatment Technology." Presented at the Second Tri-Service Environmental Technology Workshop. St. Louis, MO. June 10 through 12.

Archabal, S.R., and others. 1997b. "The Internal Combustion Engine as a Low-Cost Soil Vapor Treatment Technology." Presented at the Water Environment Federation 70th Annual Conference and Exposition. Chicago, IL. October 18 through 22.

Blake, S. B., and M.M. Gates. 1986. "Vacuum Enhanced Hydrocarbon Recovery: A Case Study." *Proceedings: Petroleum Hydrocarbons and Organic Chemicals in Groundwater* – Prevention, Detection, and Restoration, Houston, TX. November 12 through 14. Pages 709 through 721.

Bohn Biofilter Corporation. 2003. Fax Regarding Biofilter Projects. From Dr. Heinrich Bohn. To Christine Dobson, ENSR. August 21 and 26.

Bohn Biofilter Corporation. 2005. "Bohn Biofilter Corp." Product Information. On-line Address: http://www.bohnbiofilter.com

Brunet, R.A.H., and others. 1999. "Site Remediation Using Photocatalytic VOC Destruction of Chlorinated Hydrocarbons." AWMA Conference, St. Louis. Paper # 99-826.

Buck, F.A.M. 2000. "Test for Chlorinated Dioxins/Furans in Effluent Vapor from a Catalytic Oxidizer Whose Feed Streams Contained Both Chlorinated and Petroleum VOCs." Presented at the Tenth Annual West Coast Conference on Contaminated Soils and Water – Innovative Technologies Session. AEHS and U.S. Navy. March 20 through 23.

Calgon Carbon Corporation (Calgon). 2005. "Calgon Carbon Corporation." Product Information. Accessed on August 9. On-line Address: http://www.calgoncarbon.com

Canadian Association of Petroleum Producers. 1999. "Occupational Health and Safety of Light Hydrocarbons." 1999-0002. January.

Centers for Disease Control (CDC). 2005. "Facts About Phosgene." Accessed on August 9. On-line Address: http://www.bt.cdc.gov

Chang, A.N., and J.S. Devinny. 1996. "Biofiltration of JP4 Jet Fuel Vapors." *University of Southern California and The Reynolds Group Conference on Biofiltration.* Los Angeles, California. October 24 and 25.

Chapman, T.E., and others. 1997. "A Comparison of Innovative Air Pollution Control Technology Demonstrations at McClellan Air Force Base." *Air & Waste Management Association's 90th Meeting & Exhibition.* Toronto, Canada. June 8 through13.

Cox, C.D., and others. 1998. "Cometabolic Biofiltration of TCE Using Bioluminescent Reported Bacteria." *Bioremediation and Phytoremediation: Remediation of Chlorinated and Recalcitrant Compounds.* Battelle Press. Columbus, OH. Pages 221-226.

Cummings, M. and S.R. Booth. 1997. "A Summary of the Cost Effectiveness of Innovative Off-gas Treatment Technologies." Los Alamos National Laboratory.

Current Environmental Solutions (CES). 2005. "Gas Phase Corona Reactor." Accessed on November 8. On-line Address: http://www.cesiweb.com/gpcr.htm

Devinny, J.S., and D.S. Hodge. 1995. "Formation of Acidic and Toxic Intermediates in Overloaded Ethanol Biofilters." *Journal of Air and Waste Management Association.* Volume 45, Number 2. Pages 125 through 131.

ENSR. 2000a. Personal Communication Regarding Thermal Treatment Technologies. Between Mark Casey and Anguil.

ENSR. 2000b. Personal Communication Regarding Thermal Treatment Technologies. Between Mark Casey and Thermatrix.

ENSR. 2003a. Personal Communication Regarding Non-Thermal Plasma Technologies. Between Dan Groher and CES.

ENSR. 2003b. Record of Telephone Conversation Regarding Munters Zeolite Systems. Between Christine Dobson and Peter Cronisky, Munters Corporation. September 2.

ENSR. 2004a. Personal Communication Regarding Internal Combustion Engines. Between Dan Bostrom and Remediation Services, International.

ENSR. 2004b. Personal Communication Regarding Biofilter Technologies. Between Arthur Taddeo and Biocube Inc.

ENSR. 2004c. "Project Experiences with Oxidation Systems." By Dan Bostrom, Senior Program Manager.

ENSR. 2004d. Personal Communication Regarding Gas-Phase Corona Reactor. Between ENSR and Joseph Pezzullo, CES. May.

Federal Remediation Technology Roundtable (FRTR). 2004. "Federal Remediation Technology Roundtable." On-line Address: http://www.frtr.gov

Fortin, N.Y., and M.A. Deshusses. 1999. "Treatment of Methyl tert-Butyl Ether Vapors in Biotrickling Filters. Reactor Startup, Steady State Performance and Culture Characteristics." *Environmental Science and Technology.* Volume 33, Number 17. Pages 2980 through 2986.

General Carbon Corporation. 2005. "General Carbon Corp." Accessed on August 9. On-line Address: http://www.generalcarbon.com

Govind, R., and others. 1994. "Development of Novel Biofilters for Treatment of Volatile Organic Compounds." Institute of Gas Technology. *Proceedings: IGT Symposium on Gas, Oil, and Environmental Technology.* Colorado Springs, CO. November 29 through December 3.

Hart, J.R. 2004. "Emissions of Polychlorinated Dibenzo-p-Dioxins and Dibenzofurans from Catalytic and Thermal Oxidizers Burning Dilute Chlorinated Vapors." *Chemosphere*. Volume 54, Issue 10. Pages 1539 through 1547. March.

Heumann, W.L. 1997. *Industrial Air Pollution Control Systems*. "Chapter 14 – Thermal Oxidizers." McGraw Hill. New York, NY. Pages 567 through 585.

Heumann, W.L. 1998. *Industrial Air Pollution Control Systems*. McGraw Hill, New York, NY.

Hiller, D.H. 1991. "Performance Characteristics of Vapor Extraction Systems Operated in Europe."

Hodge, D., and others. 1991. "Treatment of Hydrocarbon Fuel Vapors in Biofilters." Online address: http://www.reynolds-group.com

Hydrosil International. 2005. "Hydrosil International Ltd." Online Address: http://www.hydrosilintl.com

Institute of Clean Air Companies (ICAC). 2005. "Control Technology Information." On-line Address: http://www.icac.com

Korzekwa, R.A., and others. 1998. "Destruction of Hazardous Air Pollutants Using a Fast Rise Time Pulsed Corona Reactor." *Review of Scientific Instruments*, Volume 69, Number 4. Pages 1886 through 1892.

Leson, G., and A.M. Winer. 1991. "Biofiltration: An Innovative Air Pollution Control Technology for VOC Emissions." *Journal of Air and Waste Management Association.* Volume 41, Number 8. Pages 1045 through 1053.

Leson, G., and B.J. Smith. 1997. "Petroleum Environmental Research Forum Field Study on Biofilters for Control of Volatile Hydrocarbons." *Journal of Environmental Engineering.* Volume 123, Number 6. Pages 556 through 562.

Lewis, R.F., and J. McPherson. 1996. "Site Demonstration of Allied Signal Biological Air Treatment Systems for Chlorinated Solvents." *89th Annual Meeting and Exhibition of the Air and Waste Management Association.* Nashville, TN. June 23 and 24.

Massachusetts General Laws, 1994. "Policy #WSC-94-150: Off-Gas Treatment of Point-Source Remedial Air Emissions." May.

Membrane Technology and Research Inc. [MTR]. 2004. "Membrane Technology and Research, Inc." VaporSep® Product Literature. On-line Address: http://www.mtrinc.com

Munters Corporation. 2005. "Welcome to Munters Corporation." Accessed on August 9. On-line Address: http://www.munters.us

National Institute for Occupational Safety and Health (NIOSH). 2005. "Pocket Guide to Chemical Hazards." Accessed on November 9. On-line Address: http://www.cdc.gov/niosh/npg/default.html

Naujokas, A.A. 1985. "Spontaneous Combustion of Carbon Beds." *Plant Operations/Progress.* Volume 4, Number 2. Pages 120 through 126. Eastman Kodak. Rochester, NY. April.

Naval Facilities Engineering Service Center. 2004. "NAVFAC: Naval Facilities Engineering Command." On-line Address: https://portal.navfac.navy.mil/portal/page?_pageid=181,1&_dad=portal&_schema=PORTAL

NUCON International, Inc. (NUCON). 2005. BRAYSORB® Product Literature. Columbus, OH. On-line Address: http://www.nucon-int.com

Nunez, C., and others. 1993. "Corona Destruction: An Innovative Control Technology for VOCs and Air Toxics." *Air and Waste.* Volume 43. February.

Parker, N.H. 1992. "Survey of the use of Internal Combustion (I.C.) Engines in Soil Vapor Extraction Systems." Hydrocarbon Contaminated Soils. Volume II. Lewis Publishers.

PPC Biofilter Inc. 2004. Product Information. Online address: http://www.ppcbio.com

Purifics ES Inc. 2006. Product Information. Accessed on February 28. On-line Address: http://www.purifics.com

Rafson, H.J. 1998. *Odor and VOC Control Handbook.* "Section 8 -Thermal Oxidation." McGraw Hill. New York, NY. Pages 8.31 through 8.65.

Remediation Services, International (RSI). 2005. "Remediation Service, International." On-line Address: http://www.rsi-save.com

Remediation Technologies Network (RTN). 1999a. *Remediation Information Management System 2000 (RIMS2000).* Web Site No Longer Available.

RTN. 1999b. *RIMS2000.* Ambient Engineering Inc, BIOTON. Web Site No Longer Available.

RTN. 1999c. *RIMS2000.* AMETEK Rotron Biofiltration Products, Biocube Aerobic Biofilter. Web Site No Longer Available.

RTN. 1999d. *RIMS2000.* Battelle Pacific Northwest Laboratory, Gas-Phase Corona Technology. Web Site No Longer Available.

RTN. 1999e. "Final Report: Investigation of Model Titania Catalysts for Photocatalytic Oxidation of Chlorinated Organics." *RIMS2000.* KSE, Inc., AIR-II Process. Web Site No Longer Available.

RTN. 1999f. *RIMS2000. NUCON International, Inc., Braysorb.* Web Site No Longer Available.

RTN. 1999g. *RIMS2000.* Peat/Compost Biofiltration. Web Site No Longer Available.

RTN. 1999h. RIMS2000. PPC Biofilter. Web Site No Longer Available.

RTN. 1999i. *RIMS2000.* Quad Environmental Technologies Corporation, Chemtact™ Gaseous Waste Treatment. Web Site No Longer Available.

RTN. 1999j. *RIMS2000. University of Connecticut, Contaminant Absorption and Recovery.* Web Site No Longer Available.

Skladany, G., and others. 1995. *USC-TRG Conference on Biofiltration.* Los Angeles, CA, October 5 and 6, 1995.

Sorial, G.A., and others. 1997. *Journal of Environmental Engineering.* Volume 123, Number 6. Pages 530 through 537.

Swanson, W.J., and R.C. Loehr. 1997. "Biofiltration Fundamentals, Design and Operation Principles and Applications." *Journal of Environmental Engineering.* Volume 123, Number 6. Pages 538 through 546.

The Reynolds Group Environmental Services (TRG). 2004. Company Information. Online address: http://www.reynolds-group.com

Thermatrix Inc. (Thermatrix). 2001. "Dioxin Performance of Thermatrix Flameless Thermal Oxidation vs. Flame-based Thermal Oxidation Technologies." Thermatrix Company Technical Paper. September 18.

Thermatrix. 2005. "Your Source for Flameless Thermal Oxidation Solutions." Accessed in August. On-line Address: http://www.thermatrix.com

Thornton J.S., and W.L. Wootan. 1982. "Venting for the Removal of Hydrocarbon Vapors from Gasoline Contaminated Soil." *Journal of Environmental Science and Health*, A17(1). Pages 31 through 44.

Tonga, P., and V. Magar. 1997. "Biological Destruction of Volatile Organic Compounds in the Vapor Phase." *Strategic Environmental Research and Development Program (SERDP) NETTS Project/Demonstration Summary.* November 1997 to April 1998.

U.S. Army Corps of Engineers (USACE). 1999. "Multi-Phase Extraction Engineer Manual." EM 1110-1-4010. June 1.

USACE. 2001. "Engineering and Design – Adsorption Design Guide." Chapter 3. Publication No. DG 1110-1-2. March 1.

USACE. 2002. "Soil Vapor Extraction and Bioventing Engineer Manual." EM 1110-1-4001. June 3.

U.S. Department of Energy (DOE). 2001. "Membrane System for the Recovery of Volatile Organic Compounds from Remediation Off-Gases." Innovative Technology Summary Report. DOE/EM-0614. September.

U.S. Environmental Protection Agency (U.S. EPA). 1991a. "Control Technologies for Hazardous Air Pollutants." EPA/625/6-91/014. Office of Air Quality Planning and Standards (OAQPS). Washington, DC. June.

U.S. EPA. 1991b. "Granular Activated Carbon Treatment." Engineering Bulletin. EPA/540/2-91/024. Office of Emergency and Remedial Response. Washington, DC.

U.S. EPA. 1991c. "Guide for Conducting Treatability Studies Under CERCLA, Soil Vapor Extraction." EPA/540/2-91/019A. September.

U.S. EPA. 1993a. "Emerging Technology Report: Destruction of Organic Contaminants in Air Using Advanced Ultraviolet Flashlamps." EPA/540/R-93/516. Office of Research and Development.

U.S. EPA. 1993b. "Presumptive Remedies: Site Characterization and Technology Selection for CERCLA Sites with Volatile Organic Compounds in Soils." EPA/540/F-93/048. Office of Solid Waste and Emergency Response. Washington, DC.

U.S. EPA. 1994. "Superfund Innovative Technology Evaluation (SITE) Technology Profile - Emerging Technology Program, Membrane Technology and Research, Inc, VaporSep™ Membrane Process." November.

U.S. EPA. 1995. Survey of Control Technologies for Low Concentration Organic Vapor Streams, EPA-456/R-95-003. OAQPS. Washington, DC. May.

U.S. EPA. 1996. Draft Technical Support Document for HWC MACT Standards, Volume IV: Compliance with the Proposed MACT Standards. Office of Solid Waste and Emergency Response. February.

U.S. EPA. 1997a. "Presumptive Remedy: Supplemental Bulletin Multi-Phase Extraction (MPE) Technology for VOCs in Soil and Groundwater." EPA 540-F-97-004. Office of Solid Waste and Emergency Response. Washington, DC. April.

U.S. EPA. 1997b. "Locating and Estimating Air Emissions from Sources of Dioxins and Furans." EPA-454/R-97-003. May.

U.S. EPA. 1997c. "Analysis of Selected Enhancements for Soil Vapor Extraction." EPA-542-R-97-007. Office of Solid Waste and Emergency Response. Washington, DC. September.

U.S. EPA. 1998. "Technical Bulletin: Zeolite, A Versatile Air Pollutant Adsorber." EPA 456/F-98-004. Office of Air Quality, Clean Air Technology Center. July.

U.S. EPA. 1999. "Technical Bulletin: Choosing an Adsorption System for VOC: Carbon, Zeolite, or Polymers." EPA 456/F-99-004. Office of Air Quality. May.

U.S. EPA. 2000a. *Photocatalytic AIR Cleaner for Indoor Air Pollution Control.* Office of Research and Development, National Center for Environmental Research (NCER). May.

U.S. EPA. 2000b. *Photocatalytic Oxidation of NOx and Recovery as Nitric Acid.* Office of Research and Development, NCER. May.

U.S. EPA. 2000c. *Photocatalytic Air Pollution Control Technology for Dilute VOC/TAP Destruction.* Office of Research and Development, NCER. May.

U.S. EPA. 2000d. *Photocatalytic Destruction of VOCs in Secondhand Cigarette Smoke.* Office of Research and Development, NCER. May.

U.S. EPA. 2001a. "Demonstration Bulletin, Adsorption-Integrated-Reaction (AIR 2000) Process, KSE, Inc." Superfund Innovative Technology Evaluation. EPA 540/MR-01/503. May.

U.S. EPA. 2001b. "Development of Recommendations and Methods to Support Assessment of Soil Venting Performance and Closure." EPA 600-R-01-070. September.

U.S. EPA. 2002. "Air Pollution Control Cost Manual." Office of Air Quality Planning and Standards. EPA 452-B-02-001. January.

U.S. EPA. 2003. "Exposure and Human Health Reassessment of 2,3,7,8-Tetrachlorodibenzo-p-Dioxin (TCDD) and Related Compounds." National Academy Sciences (NAS) Review Draft. EPA/600/P-00/001Cb.

U.S. EPA. 2004. "Treatment Technologies for Site Cleanup: Annual Status Report." 11th Edition. EPA-542-R-03-009. Office of Solid Waste and Emergency Response. Washington, DC. February.

U.S. EPA. 2005a. "Hazardous Waste Clean-up Information." Office of Superfund Remediation and Technology Innovation. On-line Address: http://www.clu-in.org/

U.S. EPA. 2005b. "The Inventory of Sources and Environmental Releases of Dioxin-Like Compounds in the United States: The Year 2000 Update. External Review Draft." Office of Research and Development. EPA/600/P-03/002A. March.

U.S. Navy. 2002. Navy Air Station North Island – Navy Region Southwest. Navy Environmental Leadership Program. March 1.

Wright, W.F., and others. 1997. *Journal of Environmental Engineering.* Volume 123, Number 6. Pages 547 through 555.