United States
Environmental Protection
Agency

Office of
Solid Waste
Washington, D.C. 20460

EPA/530-SW-88-0009-n
May 1988

Solid Waste

EPA

Best Demonstrated Available Technology (BDAT) Background Document for K086

Proposed

Volume 15

Non Confidential Business Information (CBI) Version

PROPOSED

BEST DEMONSTRATED AVAILABLE TECHNOLOGY (BDAT) BACKGROUND DOCUMENT FOR K086 SOLVENT WASH

U.S. Environmental Protection Agency
Office of Solid Waste
401 M Street, S.W.
Washington, D.C. 20460

James R. Berlow, Chief
Treatment Technology Section

Jose Labiosa
Project Manager

May 1988

U.S. Environmental Protection Agency
Library (5PL-16)
Dearborn Street, Room 1670
Chicago, IL 60604

BDAT BACKGROUND DOCUMENT FOR K086 SOLVENT WASH

TABLE OF CONTENTS

VOLUME 15		Page
EXECUTIVE SUMMARY		vi
1. INTRODUCTION		1
1.1	Legal Background	1
1.1.1	Requirements Under HSWA	1
1.1.2	Schedule for Developing Restrictions	4
1.2	Summary of Promulgated BDAT Methodology	5
1.2.1	Waste Treatability Groups	7
1.2.2	Demonstrated and Available Treatment Technologies	7
1.2.3	Collection of Performance Data	11
1.2.4	Hazardous Constituents Considered and Selected for Regulation	17
1.2.5	Compliance with Performance Standards	30
1.2.6	Identification of BDAT	32
1.2.7	BDAT Treatment Standards for "Derived-From" and "Mixed" Wastes	36
1.2.8	Transfer of Treatment Standards	40
1.3	Variance from the BDAT Treatment Standard	41
2. INDUSTRIES AFFECTED AND WASTE CHARACTERIZATION		46
2.1	Industry Affected and Process Description	47
2.2	Waste Characterization	50
3. APPLICABLE/DEMONSTRATED TREATMENT TECHNOLOGIES		54
3.1	Applicable Treatment Technologies	54
3.2	Demonstrated Treatment Technologies	56
3.2.1	Incineration	58
3.2.2	Fuel Substitution	77
3.2.3	Stabilization	93
3.2.4	High Temperature Metals Recovery	100
3.2.5	Chromium Reduction	108
3.2.6	Chemical Precipitation	113
3.2.7	Polishing Filtration	125
3.2.8	Sludge Filtration	130
3.3	Performance Data	134
3.3.1	Organics Performance Data	134
3.3.2	Metals Treatment Data	136

4. IDENTIFICATION OF THE BEST DEMONSTRATED AVAILABLE TECHNOLOGY FOR K086 SOLVENT WASH 150

4.1 BDAT for Treatment of Organics 150
4.2 BDAT for Treatment of Metals 152
4.2.1 Wastewater 152
4.2.2 Nonwastewater 154

5. SELECTION OF REGULATED CONSTITUENTS 157

5.1 Identification of Constituents in the Untreated Waste and Waste Residuals 158
5.2 Evaluation of the Process Generating the K086 Solvent Wash Wastes 159
5.3 Determination of Significant Treatment from BDAT 159
5.3.1 BDAT List Organic Constituents 160
5.3.2 BDAT List Metal Constituents 161
5.4 Rationale for Selection of Regulated Constituents 161

6. CALCULATION OF BDAT TREATMENT STANDARDS 175

6.1 Calculation of Treatment Standards for Nonwastewater Forms of K086 Solvent Wash 175
6.1.1 Organic Treatment Standards 176
6.1.2 Metal Treatment Standards 178
6.2 Calculation of Treatment Standards for Wastewater forms of K086 Solvent Wash 180
6.2.1 Organic Treatment Standards 180
6.2.2 Metal Treatment Standards 180

Appendix A Statistical Methods 183

Appendix B Analytical QA/QC 197

Appendix C Detection Limits for the K086 Scrubber Water Samples 212

Appendix D Method of Measurement for Thermal Conductivity 221

Appendix E Organic Detection Limits for K086 Solvent Wash Nonwastewaters 226

References 228

LIST OF TABLES

		Page
Table 1-1	BDAT Constituent List	19
Table 2-1	Number of Ink Formulators by State and by EPA Region	49
Table 2-2	Major Constituent Analysis of Untreated K086 Solvent Wash	52
Table 2-3	BDAT Constituent Composition and Other Data	53
Table 3-1	Incineration - EPA Collected Data for K086 Solvent Wash	135
Table 3-2	Chromium Reduction Chemical Precipitation Followed by Vacuum Filtration - EPA Collected Data from Envirite	139
Table 5-1	BDAT Constituents Detected or Not Detected in the K086 Solvent Wash and Scrubber Water Samples	164
Table 5-2	BDAT Constituent Concentrations in Untreated K086 Solvent Wash Waste and Scrubber Water Residual	172
Table 5-3	Calculated Bond Energy for the Candidate Organic Constituents	173
Table 5-4	Candidate Constituents for Regulation of K086 Solvent Wash	174
Table 6-1	Calculation of K086 Solvent Wash Nonwastewater Treatment Standards	179
Table 6-2	Calculation of K086 Solvent Wash Wastewater Treatment Standards	181
Table A-1	95th Percentile Values for the F Distribution	185
Table B-1	Analytical Methods for K086 Solvent Waste Regulated Constituents	200
Table B-2	Specific Procedures or Equipment Used in Extraction of Organic Compounds When Alternatives or Equivalents Are Allowed in the SW-846 Method	202

LIST OF TABLES
(continued)

		Page
Table B-3	Specific Procedures or Equipment Used for Analysis of Organic and Metal Compounds When Alternatives or Equivalents Are Allowed in SW-846	204
Table B-4	Matrix Spike Recoveries Used to Calculate Correction Factors for K086 Solvent Wash Scrubber Water Organic Concentrations	206
Table B-5	Matrix Spike Recoveries Used to Calculate Correction Factor for the Envirite Wastewater and TCLP Extract Metal Concentrations	207
Table B-6	Matrix Spike Recoveries Used to Calculate Correction Factors for the Envirite Filter Cake Organic Detection Limits	208
Table B-7	Accuracy-Corrected Envirite Metals Data for Treated Wastewater from Chromium Reduction, Lime Precipitation and Sludge Filtration	209
Table B-8	Accuracy-Corrected Envirite Metals Data for Filter Cake Residuals from Lime Stabilization and Sludge Filtration	210
Table B-9	Accuracy-Corrected Organic Concentrations for Envirite Filter Cake and K086 Solvent Wash Scrubber Water	211
Table C-1	Detection Limits for the Scrubber Effluent Water Samples	214
Table E-1	Organic Detection Limits for Envirite Filter Cake Residuals from Chromium Reduction, Chemical Precipitation, and Sludge Filtration	227

LIST OF FIGURES

		Page
Figure 2-1	Geographical Distribution of Ink Manufacturing Sites ..	48
Figure 2-2	Ink Formulation and K086 Waste Generation	51
Figure 3-1	Liquid Injection Incinerator	62
Figure 3-2	Rotary Kiln Incinerator	63
Figure 3-3	Fluidized Bed Incinerator	65
Figure 3-4	Fixed Hearth Incinerator	66
Figure 3-5	Example of High Temperature Metals Recovery System	104
Figure 3-6	Continuous Hexavalent Chromium Reduction System	110
Figure 3-7	Continuous Chemical Precipitation	116
Figure 3-8	Circular Clarifiers	119
Figure 3-9	Inclined Plate Settler	120
Figure D-1	Schematic of the Comparative Method	223

EXECUTIVE SUMMARY

BDAT Treatment Standards
K086 Solvent Wash

Pursuant to the Hazardous and Solid Waste Amendments (HSWA) enacted on November 8, 1984, and in accordance with the procedures for establishing treatment standards under section 3004 (m) of the Resource Conservation and Recovery Act (RCRA), the Environmental Protection Agency (EPA) is proposing treatment standards for one subcategory of the K086 listed waste. According to 40 CFR Part 261.32, waste code K086 is defined as "solvent washes and sludges, caustic washes and sludges, or waterwashes and sludges, from cleaning tubs and equipment used in formulation of ink from pigments, driers, soaps and stabilizers containing chromium and lead."

The Agency has determined that K086 represents three treatability groups based on physical and chemical composition: the solvent wash group, the solvent sludge group, and the caustic/water wash and sludge group. This background document pertains to the development of treatment standards for the K086 solvent wash treatability group. Treatment standards for the K086 solvent sludge treatability group and the K086 caustic/water wash and sludge treatability group have been deferred because there is insufficient characterization data and no treatment performance data available to the Agency such that treatment standards can be developed.

Treatment standards for organics are based on the performance of incineration. The treatment of K086 solvent wash using incineration generates a scrubber water residual which may contain metals and require further treatment. Treatment of the scrubber water generates a precipitated solids residual which may also need further treatment. Treatment standards for metals in the scrubber water are based on chromium reduction followed by lime precipitation and vacuum sludge filtration; for metals in the lime-precipitated residuals, treatment standards are based on the TCLP leachate values following vacuum filtration (i.e., based on lime stabilization). These technologies were determined by the Agency to represent the Best Demonstrated Available Technology (BDAT) for organics and metals present in the K086 solvent wash wastes.

The Agency has chosen to set treatment levels for these wastes rather than designating the use of a specific technology. These levels are established as a prerequisite for disposal of these wastes in units designated as land disposal units according to 40 CFR part 268. Wastes that, as generated, contain the regulated constituents at concentrations that do not exceed the treatment standards are not restricted from land disposal units. The proposed effective date for these standards is August 8, 1988.

Treatment standards have been proposed for a total of 2 metals and 17 organics that the Agency believes are indicators of effective treatment for all of the BDAT list hazardous constituents identified as typically present in K086 solvent wash. The regulated metals are total chromium and lead. The regulated organics include the organics found in the tested waste, as well as all BDAT listed organics which Agency data indicate are organic solvents used in the ink formulation process and/or in cleaning ink formulating equipment. The regulated organics include acetone, n-butyl alcohol, ethyl acetate, ethylbenzene, methanol, methyl isobutyl ketone, methyl ethyl ketone, methylene chloride, toluene, 1,1,1-trichloroethane, trichloroethylene, xylenes, bis(2-ethylhexyl) phthalate, cyclohexanone, 1,2-dichlorobenzene, napthalene, and nitrobenzene.

The table at the end of this summary lists the specific BDAT standards for wastes identified as K086 solvent wash. For the purpose of determining the applicability of the BDAT treatment standards, wastewaters are defined as wastes containing less than 1 percent (weight basis) solids and less than 1 percent (weight basis) total organic carbon (TOC). Wastes not meeting this definition must comply with treatment standards for nonwastewaters.

The Agency is setting standards for wastewaters based on analysis of total constituent concentration for BDAT list organics and BDAT list metals. For K086 solvent waste nonwastewaters, the standards are based on total constituent concentration for BDAT list organics and analysis of leachate for BDAT list metals. The leachate is obtained by use of the Toxicity Characteristic Leaching Procedure (TCLP).

The units for total constituent concentration in the nonwastewaters are in parts per million (mg/kg) on a weight-by-weight basis. The units for total constituent concentration in the wastewaters and the leachate are in parts per million (mg/l) on a weight-by-volume basis. Testing procedures are specifically identified in the quality assurance sections of this document.

EPA wishes to point out that, because of facility claims of confidentiality, this document does not contain all of the data that EPA used in its regulatory decision-making process, including selection of constituents to regulate, determination of substantial treatment, and development of BDAT treatment standards. Under 40 CFR Part 2, Subpart B, facilities may claim any or all of the data that are submitted to EPA as confidential. Any determinations regarding the validity of the facility's claim of confidential business information (CBI) will be done by EPA according to 40 CFR Part 2, Subpart B. In the meantime, the Agency will treat the data as CBI. Additionally, the Agency would like to emphasize that all the data evaluated for the development of BDAT treatment standards for K086 solvent washes have been done according to our methodology presented in Section 1 of this document. All deletions of confidential business information (CBI) are noted in the appropriate place in this background document.

BDAT TREATMENT STANDARDS
K086 Solvent Wash

BDAT reference no	BDAT list constituents	Total composition Nonwastewater (mg/kg)	Total composition Wastewater (mg/l)	TCLP Extract Nonwastewater (mg/l)
	Organics			
	Volatile Organics			
222	Acetone	0 37	0 015	NA
223	n-Butyl alcohol	0 37	0.031	NA
225	Ethyl acetate	0 37	0.031	NA
226	Ethylbenzene	0 031	0.015	NA
228	Methanol	0 37	0 031	NA
229	Methyl isobutyl ketone	0 37	0 031	NA
34	Methyl ethyl ketone	0 37	0 031	NA
38	Methylene chloride	0 037	0 031	NA
43	Toluene	0 031	0 029	NA
45	1,1,1-Trichloroethane	0 044	0 031	NA
47	Trichloroethylene	0 031	0 029	NA
215-217	Xylene (total)	0 015	0 015	NA
	Semivolatile Organics			
70	Bis(2-ethylhexyl)phthalate	0 49	0 044	NA
232	Cyclohexanone	0.49	0 022	NA
87	1,2-Dichlorobenzene	0 49	0 044	NA
121	Naphthalene	0 49	0 044	NA
126	Nitrobenzene	0 49	0 044	NA
	Metals			
159	Chromium (Total)	NA	0 32	0 094
161	Lead	NA	0 037	0 37

NA = Not applicable

1. INTRODUCTION

This section of the background document presents a summary of the legal authority pursuant to which the BDAT treatment standards were developed, a summary of EPA's promulgated methodology for developing BDAT, and finally a discussion of the petition process that should be followed to request a variance from the BDAT treatment standards.

1.1 Legal Background

1.1.1 Requirements Under HSWA

The Hazardous and Solid Waste Amendments of 1984 (HSWA), which were enacted on November 8, 1984, and which amended the Resource Conservation and Recovery Act of 1976 (RCRA), impose substantial new responsibilities on those who handle hazardous waste. In particular, the amendments require the Agency to promulgate regulations that restrict the land disposal of untreated hazardous wastes. In its enactment of HSWA, Congress stated explicitly that "reliance on land disposal should be minimized or eliminated, and land disposal, particularly landfill and surface impoundment, should be the least favored method for managing hazardous wastes" (RCRA section 1002(b)(7), 42 U.S.C. 6901(b)(7)).

One part of the amendments specifies dates on which particular groups of untreated hazardous wastes will be prohibited from land disposal unless "it has been demonstrated to the Administrator, to a reasonable degree of certainty, that there will be no migration of hazardous constituents from the disposal unit or injection zone for as long as the wastes remain hazardous" (RCRA section 3004(d)(1), (e)(1), (g)(5), 42 U.S.C. 6924 (d)(1), (e)(1), (g)(5)).

For the purpose of the restrictions, HSWA defines land disposal "to include, but not be limited to, any placement of . . . hazardous waste in a landfill, surface impoundment, waste pile, injection well, land treatment facility, salt dome formation, salt bed formation, or underground mine or cave" (RCRA section 3004(k), 42 U.S.C. 6924(k)). Although HSWA defines land disposal to include injection wells, such disposal of solvents, dioxins, and certain other wastes, known as the California List wastes, is covered on a separate schedule (RCRA section 3004(f)(2), 42 U.S.C. 6924 (f)(2)). This schedule requires that EPA develop land disposal restrictions for deep well injection by August 8, 1988.

The amendments also require the Agency to set "levels or methods of treatment, if any, which substantially diminish the toxicity of the waste or substantially reduce the likelihood of migration of hazardous constituents from the waste so that short-term and long-term threats to human health and the environment are minimized" (RCRA section 3004(m)(1), 42 U.S.C. 6924 (m)(1)). Wastes that meet treatment standards established by EPA are not prohibited and may be land disposed. In setting treatment standards for listed or characteristic wastes, EPA may establish different standards for particular wastes within a single waste code with differing treatability characteristics. One such characteristic is the physical form of the waste. This frequently leads to different standards for wastewaters and nonwastewaters.

Alternatively, EPA can establish a treatment standard that is applicable to more than one waste code when, in EPA's judgment, all the waste can be treated to the same concentration. In those instances where a generator can demonstrate that the standard promulgated for the generator's waste cannot be achieved, the Agency also can grant a variance from a treatment standard by revising the treatment standard for that particular waste through rulemaking procedures. (A further discussion of treatment variances is provided in Section 1.3.)

The land disposal restrictions are effective when promulgated unless the Administrator grants a national variance and establishes a different date (not to exceed 2 years beyond the statutory deadline) based on "the earliest date on which adequate alternative treatment, recovery, or disposal capacity which protects human health and the environment will be available" (RCRA section 3004(h)(2), 42 U.S.C. 6924 (h)(2)).

If EPA fails to set a treatment standard by the statutory deadline for any hazardous waste in the First Third or Second Third of the schedule (see Section 1.1.2), the waste may not be disposed in a landfill or surface impoundment unless the facility is in compliance with the minimum technological requirements specified in section 3004(o) of RCRA. In addition, prior to disposal, the generator must certify to the Administrator that the availability of treatment capacity has been investigated, and it has been determined that disposal in a landfill or surface impoundment is the only practical alternative to treatment currently available to the generator. This restriction on the use of

landfills and surface impoundments applies until EPA sets a treatment standard for the waste or until May 8, 1990, whichever is sooner. If the Agency fails to set a treatment standard for any ranked hazardous waste by May 8, 1990, the waste is automatically prohibited from land disposal unless the waste is placed in a land disposal unit that is the subject of a successful "no migration" demonstration (RCRA section 3004(g), 42 U.S.C. 6924(g)). "No migration" demonstrations are based on case-specific petitions that show there will be no migration of hazardous constituents from the unit for as long as the waste remains hazardous.

1.1.2 Schedule for Developing Restrictions

Under section 3004(g) of RCRA, EPA was required to establish a schedule for developing treatment standards for all wastes that the Agency had listed as hazardous by November 8, 1984. Section 3004(g) required that this schedule consider the intrinsic hazards and volumes associated with each of these wastes. The statute required EPA to set treatment standards according to the following schedule:

1. Solvents and dioxins standards must be promulgated by November 8, 1986;

2. The "California List" must be promulgated by July 8, 1987;

3. At least one-third of all listed hazardous wastes must be promulgated by August 8, 1988 (First Third);

4. At least two-thirds of all listed hazardous wastes must be promulgated by June 8, 1989 (Second Third); and

5. All remaining listed hazardous wastes and all hazardous wastes identified as of November 8, 1984, by one or more of the characteristics defined in 40 CFR Part 261 must be promulgated by May 8, 1990 (Third Third).

The statute specifically identified the solvent wastes as those covered under waste codes F001, F002, F003, F004, and F005; it identified the dioxin-containing hazardous wastes as those covered under waste codes F020, F021, F022, and F023.

Wastes collectively known as the California List wastes, defined under section 3004(d) of HSWA, are liquid hazardous wastes containing metals, free cyanides, PCBs, corrosives (i.e., a pH less than or equal to 2.0), and any liquid or nonliquid hazardous waste containing halogenated organic compounds (HOCs) above 0.1 percent by weight. Rules for the California List were proposed on December 11, 1986, and final rules for PCBs, corrosives, and HOC-containing wastes were established August 12, 1987. In that rule, EPA elected not to establish standards for metals. Therefore, the statutory limits became effective.

On May 28, 1986, EPA published a final rule (51 FR 19300) that delineated the specific waste codes that would be addressed by the First Third, Second Third, and Third Third. This schedule is incorporated into 40 CFR 268.10, 268.11, and 268.12.

1.2 Summary of Promulgated BDAT Methodology

In a November 7, 1986, rulemaking, EPA promulgated a technology-based approach to establishing treatment standards under section 3004(m). Section 3004(m) also specifies that treatment standards must "minimize" long- and short-term threats to human health and the environment arising from land disposal of hazardous wastes.

Congress indicated in the legislative history accompanying the HSWA that "[t]he requisite levels of [sic] methods of treatment established by the Agency should be the best that has been demonstrated to be achievable," noting that the intent is "to require utilization of available technology" and not a "process which contemplates technology-forcing standards" (Vol. 130 Cong. Rec. S9178 (daily ed., July 25, 1984)). EPA has interpreted this legislative history as suggesting that Congress considered the requirement under section 3004(m) to be met by application of the best demonstrated and achievable (i.e., available) technology prior to land disposal of wastes or treatment residuals. Accordingly, EPA's treatment standards are generally based on the performance of the best demonstrated available technology (BDAT) identified for treatment of the hazardous constituents. This approach involves the identification of potential treatment systems, the determination of whether they are demonstrated and available, and the collection of treatment data from well-designed and well-operated systems.

The treatment standards, according to the statute, can represent levels or methods of treatment, if any, that substantially diminish the toxicity of the waste or substantially reduce the likelihood of migration of hazardous constituents. Wherever possible, the Agency prefers to establish BDAT treatment standards as "levels" of treatment (i.e., performance standards), rather than adopting an approach that would require the use of specific treatment "methods." EPA believes that concentration-based treatment levels offer the regulated community greater

flexibility to develop and implement compliance strategies, as well as an incentive to develop innovative technologies.

1.2.1 Waste Treatability Group

In developing the treatment standards, EPA first characterizes the waste(s). As necessary, EPA may establish treatability groups for wastes having similar physical and chemical properties. That is, if EPA believes that wastes represented by different waste codes could be treated to similar concentrations using identical technologies, the Agency combines the codes into one treatability group. EPA generally considers wastes to be similar when they are both generated from the same industry and from similar processing stages. In addition, EPA may combine two or more separate wastes into the same treatability group when data are available showing that the waste characteristics affecting performance are similar or that one waste would be expected to be less difficult to treat.

Once the treatability groups have been established, EPA collects and analyzes data on identified technologies used to treat the wastes in each treatability group. The technologies evaluated must be demonstrated on the waste or a similar waste and must be available for use.

1.2.2 Demonstrated and Available Treatment Technologies

Consistent with legislative history, EPA considers demonstrated technologies to be those that are used to treat the waste of interest or a similar waste with regard to parameters that affect treatment selection (see November 7, 1986, 51 FR 40588). EPA also will consider as treatment those technologies used to separate or otherwise process chemicals and

other materials. Some of these technologies clearly are applicable to waste treatment, since the wastes are similar to raw materials processed in industrial applications.

For most of the waste treatability groups for which EPA will promulgate treatment standards, EPA will identify demonstrated technologies either through review of literature related to current waste treatment practices or on the basis of information provided by specific facilities currently treating the waste or similar wastes.

In cases where the Agency does not identify any facilities treating wastes represented by a particular waste treatability group, EPA may transfer a finding of demonstrated treatment. To do this, EPA will compare the parameters affecting treatment selection for the waste treatability group of interest to other wastes for which demonstrated technologies already have been determined. The parameters affecting treatment selection and their use for this waste are described in Section 3.2 of this document. If the parameters affecting treatment selection are similar, then the Agency will consider the treatment technology also to be demonstrated for the waste of interest. For example, EPA considers rotary kiln incineration to be a demonstrated technology for many waste codes containing hazardous organic constituents, high total organic content, and high filterable solids content, regardless of whether any facility is currently treating these wastes. The basis for this determination is data found in literature and data generated by EPA confirming the use of rotary kiln incineration on wastes having the above characteristics.

If no commercial treatment or recovery operations are identified for a waste or wastes with similar physical or chemical characteristics that affect treatment selection, the Agency will be unable to identify any demonstrated treatment technologies for the waste, and, accordingly, the waste will be prohibited from land disposal (unless handled in accordance with the exemption and variance provisions of the rule). The Agency is, however, committed to establishing treatment standards as soon as new or improved treatment processes are demonstrated (and available).

Operations only available at research facilities, pilot- and bench-scale operations, will not be considered in identifying demonstrated treatment technologies for a waste because these technologies would not necessarily be "demonstrated." Nevertheless, EPA may use data generated at research facilities in assessing the performance of demonstrated technologies.

As discussed earlier, Congress intended that technologies used to establish treatment standards under section 3004(m) be not only "demonstrated," but also available. To decide whether demonstrated technologies may be considered "available," the Agency determines whether they (1) are commercially available and (2) substantially diminish the toxicity of the waste or substantially reduce the likelihood of migration of hazardous constituents from the waste.

EPA will only set treatment standards based on a technology that meets the above criteria. Thus, the decision to classify a technology as "unavailable" will have a direct impact on the treatment standard. If

the best technology is unavailable, the treatment standard will be based on the next best treatment technology determined to be available. To the extent that the resulting treatment standards are less stringent, greater concentrations of hazardous constituents in the treatment residuals could be placed in land disposal units.

There also may be circumstances in which EPA concludes that for a given waste none of the demonstrated treatment technologies are "available" for purposes of establishing the 3004(m) treatment performance standards. Subsequently, these wastes will be prohibited from continued placement in or on the land unless managed in accordance with applicable exemptions and variance provisions. The Agency is, however, committed to establishing new treatment standards as soon as new or improved treatment processes become "available."

(1) Proprietary or patented processes. If the demonstrated treatment technology is a proprietary or patented process that is not generally available, EPA will not consider the technology in its determination of the treatment standards. EPA will consider proprietary or patented processes available if it determines that the treatment method can be purchased or licensed from the proprietor or is a commercially available treatment. The services of the commercial facility offering this technology often can be purchased even if the technology itself cannot be purchased.

(2) Substantial treatment. To be considered "available," a demonstrated treatment technology must "substantially diminish the

toxicity" of the waste or "substantially reduce the likelihood of migration of hazardous constituents" from the waste in accordance with section 3004(m). By requiring that substantial treatment be achieved in order to set a treatment standard, the statute ensures that all wastes are adequately treated before being placed in or on the land and ensures that the Agency does not require a treatment method that provides little or no environmental benefit. Treatment will always be deemed substantial if it results in nondetectable levels of the hazardous constituents of concern. If nondetectable levels are not achieved, then a determination of substantial treatment will be made on a case-by-case basis. This approach is necessary because of the difficulty of establishing a meaningful guideline that can be applied broadly to the many wastes and technologies to be considered. EPA will consider the following factors in an effort to evaluate whether a technology provides substantial treatment on a case-by-case basis:

- Number and types of constituents treated;
- Performance (concentration of the constituents in the treatment residuals); and
- Percent of constituents removed.

If none of the demonstrated treatment technologies achieve substantial treatment of a waste, the Agency cannot establish treatment standards for the constituents of concern in that waste.

1.2.3 Collection of Performance Data

Performance data on the demonstrated available technologies are evaluated by the Agency to determine whether the data are representative

of well-designed and well-operated treatment systems. Only data from well-designed and well-operated systems are included in determining BDAT. The data evaluation includes data already collected directly by EPA and/or data provided by industry. In those instances where additional data are needed to supplement existing information, EPA collects additional data through a sampling and analysis program. The principal elements of this data collection program are: (1) identification of facilities for site visits, (2) an engineering site visit, (3) a Sampling and Analysis Plan, (4) a sampling visit, and (5) an Onsite Engineering Report.

(1) Identification of facilities for site visits. To identify facilities that generate and/or treat the waste of concern, EPA uses a number of information sources. These include Stanford Research Institute's Directory of Chemical Producers; EPA's Hazardous Waste Data Management System (HWDMS); the 1986 Treatment, Storage, Disposal Facility (TSDF) National Screening Survey; and EPA's Industry Studies Data Base. In addition, EPA contacts trade associations to inform them that the Agency is considering visits to facilities in their industry and to solicit their assistance in identifying facilities for EPA to consider in its treatment sampling program.

After identifying facilities that treat the waste, EPA uses this hierarchy to select sites for engineering visits: (1) generators treating single wastes on site; (2) generators treating multiple wastes together on site; (3) commercial treatment, storage, and disposal facilities

(TSDFs); and (4) EPA in-house treatment. This hierarchy is based on two concepts: (1) to the extent possible, EPA should develop treatment standards from data produced by treatment facilities handling only a single waste, and (2) facilities that routinely treat a specific waste have had the best opportunity to optimize design parameters. Although excellent treatment can occur at many facilities that are not high in this hierarchy, EPA has adopted this approach to avoid, when possible, ambiguities related to the mixing of wastes before and during treatment.

When possible, the Agency will evaluate treatment technologies using commercially operated systems. If performance data from properly designed and operated commercial treatment methods for a particular waste or a waste judged to be similar are not available, EPA may use data from research facilities operations. Whenever research facility data are used, EPA will explain in the preamble and background document why such data were used and will request comments on the use of such data.

Although EPA's data bases provide information on treatment for individual wastes, the data bases rarely provide data that support the selection of one facility for sampling over another. In cases where several treatment sites appear to fall into the same level of the hierarchy, EPA selects sites for visits strictly on the basis of which facility could most expeditiously be visited and later sampled if justified by the engineering visit.

(2) Engineering site visit. Once a treatment facility has been selected, an engineering site visit is made to confirm that a candidate for sampling meets EPA's criteria for a well-designed facility and to ensure that the necessary sampling points can be accessed to determine operating parameters and treatment effectiveness. During the visit, EPA also confirms that the facility appears to be well operated, although the actual operation of the treatment system during sampling is the basis for EPA's decisions regarding proper operation of the treatment unit. In general, the Agency considers a well-designed facility to be one that contains the unit operations necessary to treat the various hazardous constituents of the waste, as well as to control other nonhazardous materials in the waste that may affect treatment performance.

In addition to ensuring that a system is reasonably well designed, the engineering visit examines whether the facility has a way to measure the operating parameters that affect performance of the treatment system during the waste treatment period. For example, EPA may choose not to sample a treatment system that operates in a continuous mode, for which an important operating parameter cannot be continuously recorded. In such systems, instrumentation is important in determining whether the treatment system is operating at design values during the waste treatment period.

(3) Sampling and Analysis Plan. If after the engineering site visit the Agency decides to sample a particular plant, the Agency will then develop a site-specific Sampling and Analysis Plan (SAP) according to the Generic Quality Assurance Project Plan for the Land Disposal Restriction

Program ("BDAT"), EPA/530-SW-87-011. In brief, the SAP discusses where the Agency plans to sample, how the samples will be taken, the frequency of sampling, the constituents to be analyzed and the method of analysis, operational parameters to be obtained, and specific laboratory quality control checks on the analytical results.

The Agency will generally produce a draft of the site-specific Sampling and Analysis Plan within 2 to 3 weeks of the engineering visit. The draft of the SAP is then sent to the plant for review and comment. With few exceptions, the draft SAP should be a confirmation of data collection activities discussed with the plant personnel during the engineering site visit. EPA encourages plant personnel to recommend any modifications to the SAP that they believe will improve the quality of the data.

It is important to note that sampling of a plant by EPA does not mean that the data will be used in the development of treatment standards for BDAT. EPA's final decision on whether to use data from a sampled plant depends on the actual analysis of the waste being treated and on the operating conditions at the time of sampling. Although EPA would not plan to sample a facility that was not ostensibly well designed and well operated, there is no way to ensure that at the time of the sampling the facility will not experience operating problems. Additionally, EPA statistically compares its test data to suitable industry-provided data, where available, in its determination of what data to use in developing treatment standards. The methodology for comparing data is presented later in this section.

(Note: Facilities wishing to submit data for consideration in the development of BDAT standards should, to the extent possible, provide sampling information similar to that acquired by EPA. Such facilities should review the Generic Quality Assurance Project Plan for the Land Disposal Restriction Program ("BDAT"), which delineates all of the quality control and quality assurance measures associated with sampling and analysis. (Quality assurance and quality control procedures are summarized in Section 1.2.6 of this document.)

(4) Sampling visit. The purpose of the sampling visit is to collect samples that characterize the performance of the treatment system and to document the operating conditions that existed during the waste treatment period. At a minimum, the Agency attempts to collect sufficient samples of the untreated waste and solid and liquid treatment residuals so that variability in the treatment process can be accounted for in the development of the treatment standards. To the extent practicable, and within safety constraints, EPA or its contractors collect all samples and ensure that chain-of-custody procedures are conducted so that the integrity of the data is maintained.

In general, the samples collected during the sampling visit will have already been specified in the SAP. In some instances, however, EPA will not be able to collect all planned samples because of changes in the facility operation or plant upsets; EPA will explain any such deviations from the SAP in its follow-up Onsite Engineering Report.

(5) Onsite Engineering Report. EPA summarizes all its data collection activities and associated analytical results for testing at a facility in a report referred to as the Onsite Engineering Report (OER). This report characterizes the waste(s) treated, the treated residual concentrations, the design and operating data, and all analytical results including methods used and accuracy results. This report also describes any deviations from EPA's suggested analytical methods for hazardous wastes (see Test Methods for Evaluating Solid Waste, SW-846, Third Edition, November 1986).

After the Onsite Engineering Report is completed, the report is submitted to the plant for review. This review provides the plant with a final opportunity to claim any information contained in the report as confidential. Following the review and incorporation of comments, as appropriate, the report is made available to the public with the exception of any material claimed as confidential by the plant.

1.2.4 Hazardous Constituents Considered and Selected for Regulation

(1) Development of BDAT list. The list of hazardous constituents within the waste codes that are targeted for treatment is referred to by the Agency as the BDAT constituent list. This list, provided as Table 1-1, is derived from the constituents presented in 40 CFR Part 261, Appendices VII and VIII, as well as several ignitable constituents used as the basis of listing wastes as F003 and F005. These sources provide a comprehensive list of hazardous constituents specifically regulated under RCRA. The BDAT list consists of those constituents that can be analyzed using methods published in SW-846, Third Edition.

Table 1-1 BDAT Constituent List

BDAT reference no	Parameter	CAS no
	Volatiles	
222	Acetone	67-64-1
1.	Acetonitrile	75-05-8
2	Acrolein	107-02-8
3	Acrylonitrile	107-13-1
4	Benzene	71-43-2
5	Bromodichloromethane	75-27-4
6.	Bromomethane	74-83-9
223	n-Butyl alcohol	71-36-3
7.	Carbon tetrachloride	56-23-5
8.	Carbon disulfide	75-15-0
9	Chlorobenzene	108-90-7
10	2-Chloro-1,3-butadiene	126-99-8
11	Chlorodibromomethane	124-48-1
12	Chloroethane	75-00-3
13	2-Chloroethyl vinyl ether	110-75-8
14	Chloroform	67-66-3
15.	Chloromethane	74-87-3
16.	3-Chloropropene	107-05-1
17	1,2-Dibromo-3-chloropropane	96-12-8
18	1,2-Dibromoethane	106-93-4
19	Dibromomethane	74-95-3
20	Trans-1,4-Dichloro-2-butene	110-57-6
21	Dichlorodifluoromethane	75-71-8
22	1,1-Dichloroetrane	75-34-3
23	1,2-Dichloroethane	107-06-2
24	1,1-Dichloroethylene	75-35-4
25	Trans 1,2 Dichloroethene	156-60-5
26	1,2 Dichloropropane	78-87-5
27	Trans 1,3-Dichloropropene	10061-02-6
28	cis-1,3-Dichloropropene	10061-01-5
29	1,4-Dioxane	123-91-1
224.	2-Ethoxyethanol	110-80-5
225.	Ethyl acetate	141-78-6
226.	Ethyl benzene	100-41-4
30	Ethyl cyanide	107-12-0
227	Ethyl ether	60-29-7
31.	Ethyl methacrylate	97-63-2
214	Ethylene oxide	75-21-8
32	Iodomethane	74-88-4

Table 1-1 (continued)

BDAT reference no	Parameter	CAS no
	Volatiles (continued)	
33.	Isobutyl alcohol	78-83-1
228.	Methanol	67-56-1
34.	Methyl ethyl ketone	78-93-3
229.	Methyl isobutyl ketone	108-10-1
35	Methyl methacrylate	80-62-6
37	Methacrylonitrile	126-98-7
38.	Methylene chloride	75-09-2
230	2-Nitropropane	79-46-9
39	Pyridine	110-86-1
40.	1,1,1,2-Tetrachloroethane	630-20-6
41.	1,1,2,2-Tetrachloroethane	79-34-6
42	Tetrachloroethene	127-18-4
43.	Toluene	108-88-3
44.	Tribromomethane	75-25-2
45.	1,1,1-Trichloroethane	71-55-6
46.	1,1,2-Trichloroethane	79-00-5
47.	Trichloroethene	79-01-6
48.	Trichloromonofluoromethane	75-69-4
49	1,2,3-Trichloropropane	96-18-4
231	1,1,2-Trichloro-1,2,2-trifluoro-ethane	76-13-1
50	Vinyl chloride	75-01-4
215	1,2-Xylene	97-47-6
216	1,3-Xylene	108-38-3
217	1,4-Xylene	106-44-5
	Semivolatiles	
51	Acenapnthalene	208-96-8
52	Acenaphthene	83-32-9
53	Acetophenone	98-86-2
54	2-Acetylaminofluorene	53-96-3
55	4-Aminobiphenyl	92-67-1
56	Aniline	62-53-3
57.	Anthracene	120-12-7
58	Aramite	140-57-8
59	Benz(a)anthracene	56-55-3
218.	Benzal chloride	98-87-3
60	Benzenethiol	108-98-5
61	Deleted	
62	Benzo(a)pyrene	50-32-8

Table 1-1 (continued)

BDAT reference no	Parameter	CAS no
	Semivolatiles (continued)	
63.	Benzo(b)fluoranthene	205-99-2
64.	Benzo(ghi)perylene	191-24-2
65	Benzo(k)fluoranthene	207-08-9
66	p-Benzoquinone	106-51-4
67	Bis(2-chloroethoxy)methane	111-91-1
68.	Bis(2-chloroethyl)ether	111-44-4
69.	Bis(2-chloroisopropyl)ether	39638-32-9
70.	Bis(2-ethylhexyl)phthalate	117-81-7
71	4-Bromophenyl phenyl ether	101-55-3
72	Butyl benzyl phthalate	85-68-7
73	2-sec-Butyl-4,6-dinitrophenol	88-85-7
74.	p-Chloroaniline	106-47-8
75	Chlorobenzilate	510-15-6
76	p-Chloro-m-cresol	59-50-7
77	2-Chloronaphthalene	91-58-7
78	2-Chlorophenol	95-57-8
79	3-Chloropropionitrile	542-76-7
80.	Chrysene	218-01-9
81.	ortho-Cresol	95-48-7
82	para-Cresol	106-44-5
232	Cyclohexanone	108-94-1
83	Dibenz(a,h)anthracene	53-70-3
84	Dibenzo(a,e)pyrene	192-65-4
85	Dibenzo(a,i)pyrene	189-55-9
86	m-Dichlorobenzene	541-73-1
87	o-Dichlorobenzene	[illegible]
88	p-Dichlorobenzene	[illegible]-46-7
89	3,3'-Dichlorobenzidine	[illegible]-94-1
90	2,4-Dichlorophenol	[illegible]
91	2,6-Dichlorophenol	87-65-0
92	Diethyl phthalate	84-66-2
93	3,3'-Dimethoxybenzidine	119-90-4
94	p-Dimethylaminoazobenzene	60-11-7
95.	3,3'-Dimethylbenzidine	119-93-7
96.	2,4-Dimethylphenol	105-67-9
97	Dimethyl phthalate	131-11-3
98	Di-n-butyl phthalate	84-74-2
99	1,4-Dinitrobenzene	100-25-4
100	4,6-Dinitro-o-cresol	534-52-1
101	2,4-Dinitrophenol	51-28-5

Table 1-1 (continued)

BDAT reference no.	Parameter	CAS no
	Semivolatiles (continued)	
102	2,4-Dinitrotoluene	121-14-2
103.	2,6-Dinitrotoluene	606-20-2
104.	Di-n-octyl phthalate	117-84-0
105	Di-n-propylnitrosamine	621-64-7
106	Diphenylamine	122-39-4
219.	Diphenylnitrosamine	86-30-6
107.	1,2-Diphenylhydrazine	122-66-7
108.	Fluoranthene	206-44-0
109.	Fluorene	86-73-7
110.	Hexachlorobenzene	118-74-1
111.	Hexachlorobutadiene	87-68-3
112	Hexachlorocyclopentadiene	77-47-4
113.	Hexachloroethane	67-72-1
114.	Hexachlorophene	70-30-4
115	Hexachloropropene	1888-71-7
116	Indeno(1,2,3-cd)pyrene	193-39-5
117.	Isosafrole	120-58-1
118.	Methapyrilene	91-80-5
119	3-Methylcholanthrene	56-49-5
120	4,4'-Methylenebis (2-chloroaniline)	101-14-4
36	Methyl methanesulfonate	66-27-3
121	Naphthalene	91-20-3
122	1,4-Naphthoquinone	130-15-4
123	1-Naphthylamine	134-32-7
124.	2-Naphthylamine	91-59-8
125	p-Nitroaniline	100-01-6
126	Nitrobenzene	98-95-3
127	4-Nitrophenol	100-02-7
128	N-Nitrosodi-n-butylamine	924-16-3
129	N-Nitrosodiethylamine	55-18-5
130	N-Nitrosodimethylamine	62-75-9
131	N-Nitrosomethylethylamine	10595-95-6
132.	N-Nitrosomorpholine	59-89-2
133.	N-Nitrosopiperidine	100-75-4
134	n-Nitrosopyrrolidine	930-55-2
135.	5-Nitro-o-toluidine	99-65-8
136.	Pentachlorobenzene	608-93-5
137.	Pentachloroethane	76-01-7
138.	Pentachloronitrobenzene	82-68-8

Table 1-1 (continued)

BDAT reference no.	Parameter	CAS no
	Semivolatiles (continued)	
139.	Pentachlorophenol	87-86-5
140	Phenacetin	62-44-2
141	Phenanthrene	85-01-8
142.	Phenol	108-95-2
220	Phthalic anhydride	85-44-9
143	2-Picoline	109-06-8
144	Pronamide	23950-58-5
145.	Pyrene	129-00-0
146	Resorcinol	108-46-3
147	Safrole	94-59-7
148	1,2,4,5-Tetrachlorobenzene	95-94-3
149	2,3,4,6-Tetrachlorophenol	58-90-2
150.	1,2,4-Trichlorobenzene	120-82-1
151	2,4,5-Trichlorophenol	95-95-4
152	2,4,6-Trichlorophenol	88-06-2
153	Tris(2,3-dibromopropyl) phosphate	126-72-7
	Metals	
154	Antimony	7440-36-0
155	Arsenic	7440-38-2
156	Barium	7440-39-3
157	Beryllium	7440-41-7
158	Cadmium	7440-43-9
159	Chromium (total)	7440-47-32
221	Chromium (hexavalent)	-
160	Copper	7440-50-8
161	Lead	7439-92-1
162	Mercury	7439-97-6
163	Nickel	7440-02-0
164	Selenium	7782-49-2
165	Silver	7440-22-4
166.	Thallium	7440-28-0
167	Vanadium	7440-62-2
168.	Zinc	7440-66-6
	Inorganics	
169	Cyanide	57-12-5
170	Fluoride	16984-48-8
171.	Sulfide	8496-25-8

Table 1-1 (continued)

BDAT reference no.	Parameter	CAS no.
	Organochlorine pesticides	
172.	Aldrin	309-00-2
173	alpha-BHC	319-84-6
174.	beta-BHC	319-85-7
175.	delta-BHC	319-86-8
176.	gamma-BHC	58-89-9
177	Chlordane	57-74-9
178	DDD	72-54-8
179	DDE	72-55-9
180.	DDT	50-29-3
181	Dieldrin	60-57-1
182	Endosulfan I	939-98-8
183	Endosulfan II	33213-6-5
184.	Endrin	72-20-8
185	Endrin aldehyde	7421-93-4
186	Heptachlor	76-44-8
187	Heptachlor epoxide	1024-57-3
188.	Isodrin	465-73-6
189.	Kepone	143-50-0
190.	Methoxyclor	72-43-5
191.	Toxaphene	8001-35-2
	Phenoxyacetic acid herbicides	
192	2,4-Dichloropnenoxyacetic acid	94-75-7
193	Silvex	93-72-1
194	2,4,5-T	93-76-5
	Organophosphorous insecticides	
195	Disulfoton	298-04-4
196	Famphur	52-85-7
197	Methyl parathion	298-00-0
198	Parathion	56-38-2
199	Phorate	298-02-2
	PCBs	
200	Aroclor 1016	12674-11-2
201	Aroclor 1221	11104-28-2
202	Aroclor 1232	11141-16-5

Table 1-1 (continued)

BDAT reference no	Parameter	CAS no
	PCBs (continued)	
203.	Aroclor 1242	53469-21-9
204	Aroclor 1248	12672-29-6
205.	Aroclor 1254	11097-69-1
206	Aroclor 1260	11096-82-5
	Dioxins and furans	
207	Hexachlorodibenzo-p-dioxins	-
208	Hexachlorodibenzofurans	-
209	Pentachlorodibenzo-p-dioxins	-
210	Pentachlorodibenzofurans	-
211	Tetrachlorodibenzo-p-dioxins	-
212	Tetrachlorodibenzofurans	-
213	2,3,7,8-Tetrachlorodibenzo-p-dioxin	1746-01-6

The initial BDAT constituent list was published in EPA's Generic Quality Assurance Project Plan, March 1987 (EPA/530-SW-87-011). Additional constituents will be added to the BDAT constituent list as more key constituents are identified for specific waste codes or as new analytical methods are developed for hazardous constituents. For example, since the list was published in March 1987, 18 additional constituents (hexavalent chromium, xylenes (all three isomers), benzal chloride, phthalic anhydride, ethylene oxide, acetone, n-butyl alcohol, 2-ethoxyethanol, ethyl acetate, ethyl benzene, ethyl ether, methanol, methyl isobutyl ketone, 2-nitropropane, 1,1,2-trichloro-1,2,2-trifluoroethane, and cyclohexanone) have been added to the list.

Chemicals are listed in Appendix VIII if they are shown in scientific studies to have toxic, carcinogenic, mutagenic, or teratogenic effects on humans or other life-forms, and they include such substances as those identified by the Agency's Carcinogen Assessment Group as being carcinogenic. Including a constituent in Appendix VIII means that the constituent can be cited as a basis for listing toxic wastes.

Although Appendix VII, Appendix VIII, and the F003 and F005 ignitables provide a comprehensive list of RCRA-regulated hazardous constituents, not all of the constituents can be analyzed in a complex waste matrix. Therefore, constituents that could not be readily analyzed in an unknown waste matrix were not included on the initial BDAT list. As mentioned above, however, the BDAT constituent list is a continuously growing list that does not preclude the addition of new constituents when analytical methods are developed.

There are five major reasons that constituents were not included on the BDAT constituent list:

1. Constituents are unstable. Based on their chemical structure, some constituents will either decompose in water or will ionize. For example, maleic anhydride will form maleic acid when it comes in contact with water and copper cyanide will ionize to form copper and cyanide ions. However, EPA may choose to regulate the decomposition or ionization products.

2. EPA-approved or verified analytical methods are not available. Many constituents, such as 1,3,5-trinitrobenzene, are not measured adequately or even detected using any of EPA's analytical methods published in SW-846 Third Edition.

3. The constituent is a member of a chemical group designated in Appendix VIII as not otherwise specified (N.O.S.). Constituents listed as N.O.S., such as chlorinated phenols, are a generic group of some types of chemicals for which a single analytical procedure is not available. The individual members of each such group need to be listed to determine whether the constituents can be analyzed. For each N.O.S. group, all those constituents that can be readily analyzed are included in the BDAT constituent list.

4. Available analytical procedures are not appropriate for a complex waste matrix. Some compounds, such as auramine, can be analyzed as a pure constituent. However, in the presence of other constituents, the recommended analytical method does not positively identify the constituent. The use of high pressure liquid chromatography (HPLC) presupposes a high expectation of finding the specific constituents of interest. In using this procedure to screen samples, protocols would have to be developed on a case-specific basis to verify the identity of constituents present in the samples. Therefore, HPLC is not an appropriate analytical procedure for complex samples containing unknown constituents.

5. Standards for analytical instrument calibration are not commercially available. For several constituents, such as benz(c)acridine, commercially available standards of a "reasonably" pure grade are not available. The unavailability of a standard was determined by a review of catalogs from specialty chemical manufacturers.

Two constituents (fluoride and sulfide) are not specifically included in Appendices VII and VIII; however, these compounds are included on the BDAT list as indicator constituents for compounds from Appendices VII and VIII such as hydrogen fluoride and hydrogen sulfide, which ionize in water.

The BDAT constituent list presented in Table 1-1 is divided into the following nine groups:

- Volatile organics;
- Semivolatile organics;
- Metals;
- Other inorganics;
- Organochlorine pesticides;
- Phenoxyacetic acid herbicides;
- Organophosphorous insecticides;
- PCBs; and
- Dioxins and furans.

The constituents were placed in these categories based on their chemical properties. The constituents in each group are expected to behave similarly during treatment and are also analyzed, with the exception of the metals and inorganics, by using the same analytical methods.

(2) Constituent selection analysis. The constituents that the Agency selects for regulation in each treatability group are, in general, those found in the untreated wastes at treatable concentrations. For certain waste codes, the target list for the untreated waste may have been shortened (relative to analyses performed to test treatment technologies) because of the extreme unlikelihood that the constituent will be present.

In selecting constituents for regulation, the first step is to summarize all the constituents that were found in the untreated waste at treatable concentrations. This process involves the use of the statistical analysis of variance (ANOVA) test, described in Section 1.2.6, to determine if constituent reductions were significant. The Agency interprets a significant reduction in concentration as evidence that the technology actually "treats" the waste.

There are some instances where EPA may regulate constituents that are not found in the untreated waste but are detected in the treated residual. This is generally the case where presence of the constituents in the untreated waste interferes with the quantification of the constituent of concern. In such instances, the detection levels of the constituent are relatively high, resulting in a finding of "not detected" when, in fact, the constituent is present in the waste.

After determining which of the constituents in the untreated waste are present at treatable concentrations, EPA develops a list of potential constituents for regulation. The Agency then reviews this list to determine if any of these constituents can be excluded from regulation because they would be controlled by regulation of other constituents in the list.

EPA performs this indicator analysis for two reasons: (1) it reduces the analytical cost burdens on the treater and (2) it facilitates implementation of the compliance and enforcement program. EPA's rationale for selection of regulated constituents for this waste code is presented in Section 5 of this background document.

(3) Calculation of standards. The final step in the calculation of the BDAT treatment standard is the multiplication of the average treatment value by a factor referred to by the Agency as the variability factor. This calculation takes into account that even well-designed and well-operated treatment systems will experience some fluctuations in performance. EPA expects that fluctuations will result from inherent mechanical limitations in treatment control systems, collection of treated samples, and analysis of these samples. All of the above fluctuations can be expected to occur at well-designed and well-operated treatment facilities. Therefore, setting treatment standards utilizing a variability factor should be viewed not as a relaxing of section 3004(m) requirements, but rather as a function of the normal variability of the treatment processes. A treatment facility will have to be designed to meet the mean achievable treatment performance level to ensure that the performance levels remain within the limits of the treatment standard.

The Agency calculates a variability factor for each constituent of concern within a waste treatability group using the statistical calculation presented in Appendix A. The equation for calculating the variability factor is the same as that used by EPA for the development of numerous regulations in the Effluent Guidelines Program under the Clean Water Act. The variability factor establishes the instantaneous maximum based on the 99th percentile value.

There is an additional step in the calculation of the treatment standards in those instances where the ANOVA analysis shows that more

than one technology achieves a level of performance that represents BDAT. In such instances, the BDAT treatment standard is calculated by first averaging the mean performance value for each technology for each constituent of concern and then multiplying that value by the highest variability factor among the technologies considered. This procedure ensures that all the BDAT technologies used as the basis for the standards will achieve full compliance.

1.2.5 Compliance with Performance Standards

All the treatment standards reflect performance achieved by the best demonstrated available technology (BDAT). As such, compliance with these standards requires only that the treatment level be achieved prior to land disposal. It does not require the use of any particular treatment technology. While dilution of the waste as a means to comply with the standard is prohibited, wastes that are generated in such a way as to naturally meet the standard can be land disposed without treatment. With the exception of treatment standards that prohibit land disposal, all treatment standards proposed are expressed as a concentration level.

EPA has used both total constituent concentration and TCLP analyses of the treated waste as a measure of technology performance. EPA's rationale for when each of these analytical tests is used is explained in the following discussion.

For all organic constituents, EPA is basing the treatment standards on the total constituent concentration found in the treated waste. EPA based its decision on the fact that technologies exist to destroy the

various organics compounds. Accordingly, the best measure of performance would be the extent to which the various organic compounds have been destroyed or the total amount of constituent remaining after treatment. (NOTE: EPA's land disposal restrictions for solvent waste codes F001-F005 (51 FR 40572) use the TCLP value as a measure of performance. At the time that EPA promulgated the treatment standards for F001-F005, useful data were not available on total constituent concentrations in treated residuals and, as a result, the TCLP data were considered to be the best measure of performance.)

For all metal constituents, EPA is using both total constituent concentration and/or the TCLP as the basis for treatment standards. The total constituent concentration is being used when the technology basis includes a metal recovery operation. The underlying principle of metal recovery is the reduction of the amount of metal in a waste by separating the metal for recovery; therefore, total constituent concentration in the treated residual is an important measure of performance for this technology. Additionally, EPA also believes that it is important that any remaining metal in a treated residual waste not be in a state that is easily leachable; accordingly, EPA is also using the TCLP as a measure of performance. It is important to note that for wastes for which treatment standards are based on a metal recovery process, the facility has to comply with both the total constituent concentration and the TCLP prior to land disposal.

In cases where treatment standards for metals are not based on recovery techniques but rather on stabilization, EPA is using only the TCLP as a measure of performance. The Agency's rationale is that stabilization is not meant to reduce the concentration of metal in a waste but only to chemically minimize the ability of the metal to leach.

1.2.6 Identification of BDAT

(1) Screening of treatment data. This section explains how the Agency determines which of the treatment technologies represent treatment by BDAT. The first activity is to screen the treatment performance data from each of the demonstrated and available technologies according to the following criteria:

1. Design and operating data associated with the treatment data must reflect a well-designed, well-operated system for each treatment data point. (The specific design and operating parameters for each demonstrated technology for this waste code are discussed in Section 3.2 of this document.)

2. Sufficient QA/QC data must be available to determine the true values of the data from the treated waste. This screening criterion involves adjustment of treated data to take into account that the type value may be different from the measured value. This discrepancy generally is caused by other constituents in the waste that can mask results or otherwise interfere with the analysis of the constituent of concern.

3. The measure of performance must be consistent with EPA's approach to evaluating treatment by type of constituents (e.g., total concentration data for organics, and total concentration and TCLP for metals in the leachate from the residual).

In the absence of data needed to perform the screening analysis, EPA will make decisions on a case-by-case basis as to whether to include the data. The factors included in this case-by-case analysis will be the

actual treatment levels achieved, the availability of the treatment data and their completeness (with respect to the above criteria), and EPA's assessment of whether the untreated waste represents the waste code of concern. EPA's application of these screening criteria for this waste code is provided in Section 4 of this background document.

(2) Comparison of treatment data. In cases in which EPA has treatment data from more than one technology following the screening activity, EPA uses the statistical method known as analysis of variance (ANOVA) to determine if one technology performs significantly better than the others. This statistical method (summarized in Appendix A) provides a measure of the differences between two data sets. If EPA finds that one technology performs significantly better (i.e., the data sets are not homogeneous), BDAT treatment standards are the level of performance achieved by the best technology multiplied by the corresponding variability factor for each regulated constituent.

If the differences in the data sets are not statistically significant, the data sets are said to be homogeneous. Specifically, EPA uses the analysis of variance to determine whether BDAT represents a level of performance achieved by only one technology or represents a level of performance achieved by more than one (or all) of the technologies. If the Agency finds that the levels of performance for one or more technologies are not statistically different, EPA averages the performance values achieved by each technology and then multiplies this value by the largest variability factor associated with any of the

acceptable technologies. A detailed discussion of the treatment selection metho and an example of how EPA chooses BDAT from multiple treatment systems is provided in Section A-1.

(3) Quality assurance/quality control. This section presents the principal quality assurance/quality control (QA/QC) procedures employed in screening and adjusting the data to be used in the calculation of treatment standards. Additional QA/QC procedures used in collecting and screening data for the BDAT program are presented in EPA's Generic Quality Assurance Project Plan for Land Disposal Restrictions Program ("BDAT") (EPA/530-SW-87-011, March 1987).

To calculate the treatment standards for the Land Disposal Restriction Rules, it is first necessary to determine the recovery value for each constituent (the amount of constituent recovered after spiking, which is the addition of a known amount of the constituent, minus the initial concentration in the samples divided by the amount added) for a spike of the treated residual. Once the recovery value is determined, the following procedures are used to select the appropriate percent recovery value to adjust the analytical data:

1. If duplicate spike recovery values are available for the constituent of interest, the data are adjusted by the lowest available percent recovery value (i.e., the value that will yield the most conservative estimate of treatment achieved). However, if a spike recovery value of less than 20 percent is reported for a specific constituent, the data are not used to set treatment standards because the Agency does not have sufficient confidence in the reported value to set a national standard.

2. If data are not available for a specific constituent but are available for an isomer, then the spike recovery data are transferred from the isomer and the data are adjusted using the percent recovery selected according to the procedure described in (1) above.

3. If data are not available for a specific constituent but are available for a similar class of constituents (e.g., volatile organics, acid-extractable semivolatiles), then spike recovery data available for this class of constituents are transferred. All spike recovery values greater than or equal to 20 percent for a spiked sample are averaged and the constituent concentration is adjusted by the average recovery value. If spiked recovery data are available for more than one sample, the average is calculated for each sample and the data are adjusted by the lowest average value.

4. If matrix spike recovery data are not available for a set of data to be used to calculate treatment standards, then matrix spike recovery data are transferred from a waste that the Agency believes is a similar matrix (e.g., if the data are for an ash from incineration, then data from other incinerator ashes could be used). While EPA recognizes that transfer of matrix spike recovery data from a similar waste is not an exact analysis, this is considered the best approach for adjusting the data to account for the fact that most analyses do not result in extraction of 100 percent of the constituent. In assessing the recovery data to be transferred, the procedures outlined in (1), (2), and (3) above are followed.

The analytical procedures employed to generate the data used to calculate the treatment standards are listed in Appendix B of this document. In cases where alternatives or equivalent procedures and/or equipment are allowed in EPA's SW-846, Third Edition (November 1986) methods, the specific procedures and equipment used are also documented in this Appendix. In addition, any deviations from the SW-846, Third Edition, methods used to analyze the specific waste matrices are documented. It is important to note that the Agency will use the methods and procedures delineated in Appendix B to enforce the treatment

standards presented in Section 6 of this document. Accordingly, facilities should use these procedures in assessing the performance of their treatment systems.

1.2.7 BDAT Treatment Standards for "Derived-From" and "Mixed" Wastes

(1) Wastes from treatment trains generating multiple residues. In a number of instances, the proposed BDAT consists of a series of operations, each of which generates a waste residue. For example, the proposed BDAT for a certain waste code is based on solvent extraction, steam stripping, and activated carbon adsorption. Each of these treatment steps generates a waste requiring treatment--a solvent-containing stream from solvent extraction, a stripper overhead, and spent activated carbon. Treatment of these wastes may generate further residues; for instance, spent activated carbon (if not regenerated) could be incinerated, generating an ash and possibly a scrubber water waste. Ultimately, additional wastes are generated that may require land disposal. With respect to these wastes, the Agency wishes to emphasize the following points:

1. All of the residues from treating the original listed wastes are likewise considered to be the listed waste by virtue of the derived-from rule contained in 40 CFR Part 261.3(c)(2). (This point is discussed more fully in (2) below.) Consequently, all of the wastes generated in the course of treatment would be prohibited from land disposal unless they satisfy the treatment standard or meet one of the exceptions to the prohibition.

2. The Agency's proposed treatment standards generally contain a concentration level for wastewaters and a concentration level for nonwastewaters. The treatment standards apply to all of the wastes generated in treating the original prohibited waste. Thus, all solids generated from treating these wastes would have

to meet the treatment standard for nonwastewaters. All derived-from wastes meeting the Agency definition of wastewater (less than 1 percent TOC and less than 1 percent total filterable solids) would have to meet the treatment standard for wastewaters. EPA wishes to make clear that this approach is not meant to allow partial treatment in order to comply with the applicable standard.

3. The Agency has not performed tests, in all cases, on every waste that can result from every part of the treatment train. However, the Agency's treatment standards are based on treatment of the most concentrated form of the waste. Consequently, the Agency believes that the less concentrated wastes generated in the course of treatment will also be able to be treated to meet this value.

(2) Mixtures and other derived-from residues. There is a further question as to the applicability of the BDAT treatment standards to residues generated not from treating the waste (as discussed above), but from other types of management. Examples are contaminated soil or leachate that is derived from managing the waste. In these cases, the mixture is still deemed to be the listed waste, either because of the derived-from rule (40 CFR Part 261.3(c)(2)(i)) or the mixture rule (40 CFR Part 261.3(a)(2)(iii) and (iv)) or because the listed waste is contained in the matrix (see, for example, 40 CFR Part 261.33(d)). The prohibition for the particular listed waste consequently applies to this type of waste.

The Agency believes that the majority of these types of residues can meet the treatment standards for the underlying listed wastes (with the possible exception of contaminated soil and debris for which the Agency is currently investigating whether it is appropriate to establish a separate treatability subcategorization). For the most part, these

residues will be less concentrated than the original listed waste. The Agency's treatment standards also make a generous allowance for process variability by assuming that all treatability values used to establish the standard are lognormally distributed. The waste also might be amenable to a relatively nonvariable form of treatment technology such as incineration. Finally, and perhaps most important, the rules contain a treatability variance that allows a petitioner to demonstrate that its waste cannot be treated to the level specified in the rule (40 CFR Part 268.44(a)). This provision provides a safety valve that allows persons with unusual waste matrices to demonstrate the appropriateness of a different standard. The Agency, to date, has not received any petitions under this provision (for example, for residues contaminated with a prohibited solvent waste), indicating, in the Agency's view, that the existing standards are generally achievable.

(3) Residues from managing listed wastes or that contain listed wastes. The Agency has been asked if and when residues from managing hazardous wastes, such as leachate and contaminated ground water, become subject to the land disposal prohibitions. Although the Agency believes this question to be settled by existing rules and interpretative statements, to avoid any possible confusion the Agency will address the question again.

Residues from managing First Third wastes, listed California List wastes, and spent solvent and dioxin wastes are all considered to be subject to the prohibitions for the underlying hazardous waste. Residues

from managing California List wastes likewise are subject to the California List prohibitions when the residues themselves exhibit a characteristic of hazardous waste. This determination stems directly from the derived-from rule in 40 CFR Part 261.3(c)(2) or, in some cases, from the fact that the waste is mixed with or otherwise contains the listed waste. The underlying principle stated in all of these provisions is that listed wastes remain listed until delisted.

The Agency's historic practice in processing delisting petitions that address mixing residuals has been to consider them to be the listed waste and to require that delisting petitioners address all constituents for which the derived-from waste (or other mixed waste) was listed. The language in 40 CFR Part 260.22(b) states that mixtures or derived-from residues can be delisted provided a delisting petitioner makes a demonstration identical to that which a delisting petitioner would make for the underlying waste. Consequently, these residues are treated as the underlying listed waste for delisting purposes. The statute likewise takes this position, indicating that soil and debris that are contaminated with listed spent solvents or dioxin wastes are subject to the prohibition for these wastes even though these wastes are not the originally generated waste, but rather are a residual from management (RCRA section 3004(e)(3)). It is EPA's view that all such residues are covered by the existing prohibitions and treatment standards for the listed hazardous waste that these residues contain and from which they are derived.

1.2.8 Transfer of Treatment Standards

EPA is proposing some treatment standards that are not based on testing of the treatment technology of the specific waste subject to the treatment standard. Instead, the Agency has determined that the constituents present in the subject waste can be treated to the same performance levels as those observed in other wastes for which EPA has previously developed treatment data. EPA believes that transferring treatment performance for use in establishing treatment standards for untested wastes is technically valid in cases where the untested wastes are generated from similar industries, have similar processing steps, or have similar waste characteristics affecting performance and treatment selection. Transfer of treatment standards to similar wastes or wastes from similar processing steps requires little formal analysis. However, in a case where only the industry is similar, EPA more closely examines the waste characteristics prior to deciding whether the untested waste constituents can be treated to levels associated with tested wastes.

EPA undertakes a two-step analysis when determining whether wastes generated by different processes within a single industry can be treated to the same level of performance. First, EPA reviews the available waste characteristic data to identify those parameters that are expected to affect treatment selection. EPA has identified some of the most important constituents and other parameters needed to select the treatment technology appropriate for a given waste. A detailed discussion of each analysis, including how each parameter was selected for each waste, can be found in Section 5 of this document.

Second, when an individual analysis suggests that an untested waste can be treated with the same technology as a waste for which treatment performance data are already available, EPA analyzes a more detailed list of constituents that represent some of the most important waste characteristics that the Agency believes will affect the performance of the technology. By examining and comparing these characteristics, the Agency determines whether the untested wastes will achieve the same level of treatment as the tested waste. Where the Agency determines that the untested waste is easier to treat than the tested waste, the treatment standards can be transferred. A detailed discussion of this transfer process for each waste can be found in later sections of this document.

1.3 Variance from the BDAT Treatment Standard

The Agency recognizes that there may exist unique wastes that cannot be treated to the level specified as the treatment standard. In such a case, a generator or owner/operator may submit a petition to the Administrator requesting a variance from the treatment standard. A particular waste may be significantly different from the wastes considered in establishing treatability groups because the waste contains a more complex matrix that makes it more difficult to treat. For example, complex mixtures may be formed when a restricted waste is mixed with other waste streams by spills or other forms of inadvertent mixing. As a result, the treatability of the restricted waste may be altered such that it cannot meet the applicable treatment standard.

Variance petitions must demonstrate that the treatment standard established for a given waste cannot be met. This demonstration can be

made by showing that attempts to treat the waste by available technologies were not successful or by performing appropriate analyses of the waste, including waste characteristics affecting performance, which demonstrate that the waste cannot be treated to the specified levels. Variances will not be granted based solely on a showing that adequate BDAT treatment capacity is unavailable. (Such demonstrations can be made according to the provisions in Part 268.5 of RCRA for case-by-case extensions of the effective date.) The Agency will consider granting generic petitions provided that representative data are submitted to support a variance for each facility covered by the petition.

Petitioners should submit at least one copy to:

The Administrator
U.S. Environmental Protection Agency
401 M Street, S.W.
Washington, DC 20460

An additional copy marked "Treatability Variance" should be submitted to:

Chief, Waste Treatment Branch
Office of Solid Waste (WH-565)
U.S. Environmental Protection Agency
401 M Street, S.W.
Washington, DC 20460

Petitions containing confidential information should be sent with only the inner envelope marked "Treatability Variance" and "Confidential Business Information" and with the contents marked in accordance with the requirements of 40 CFR Part 2 (41 FR 36902, September 1, 1976, amended by 43 FR 4000).

The petition should contain the following information:

1. The petitioner's name and address.

2. A statement of the petitioner's interest in the proposed action.

3. The name, address, and EPA identification number of the facility generating the waste, and the name and telephone number of the plant contact.

4. The process(es) and feed materials generating the waste and an assessment of whether such process(es) or feed materials may produce a waste that is not covered by the demonstration.

5. A description of the waste sufficient for comparison with the waste considered by the Agency in developing BDAT, and an estimate of the average and maximum monthly and annual quantities of waste covered by the demonstration. (Note: The petitioner should consult the appropriate BDAT background document for determining the characteristics of the wastes considered in developing treatment standards.)

6. If the waste has been treated, a description of the system used for treating the waste, including the process design and operating conditions. The petition should include the reasons the treatment standards are not achievable and/or why the petitioner believes the standards are based on inappropriate technology for treating the waste. (Note: The petitioner should refer to the BDAT background document as guidance for determining the design and operating parameters that the Agency used in developing treatment standards.)

7. A description of the alternative treatment systems examined by the petitioner (if any); a description of the treatment system deemed appropriate by the petitioner for the waste in question; and, as appropriate, the concentrations in the treatment residual or extract of the treatment residual (i.e., using the TCLP, where appropriate, for stabilized metals) that can be achieved by applying such treatment to the waste.

8. A description of those parameters affecting treatment selection and waste characteristics that affect performance, including results of all analyses. (See Section 3.0 for a discussion of waste characteristics affecting performance that the Agency has identified for the technology representing BDAT.)

9. The dates of the sampling and testing.

10. A description of the methodologies and equipment used to obtain representative samples.

11. A description of the sample handling and preparation techniques, including techniques used for extraction, containerization, and preservation of the samples.

12. A description of analytical procedures used, including QA/QC methods.

After receiving a petition for a variance, the Administrator may request any additional information or waste samples that may be required to evaluate and process the petition. Additionally, all petitioners must certify that the information provided to the Agency is accurate under 40 CFR Part 268.4(b).

In determining whether a variance will be granted, the Agency will first look at the design and operation of the treatment system being used. If EPA determines that the technology and operation are consistent with BDAT, the Agency will evaluate the waste to determine if the waste matrix and/or physical parameters are such that the BDAT treatment standards reflect treatment of this waste. Essentially, this latter analysis will concern the parameters affecting treatment selection and waste characteristics affecting performance parameters.

In cases where BDAT is based on more than one technology, the petitioner will need to demonstrate that the treatment standard cannot be met using any of the technologies, or that none of the technologies are appropriate for treatment of the waste. After the Agency has made a determination on the petition, the Agency's findings will be published in the Federal Register, followed by a 30-day period for public comment.

After review of the public comments, EPA will publish its final determination in the Federal Register as an amendment to the treatment standards in 40 CFR Part 268, Subpart D.

2. INDUSTRIES AFFECTED AND WASTE CHARACTERIZATION

The previous section presents the generic methodology for developing BDAT standards. The purpose of this section is to discuss the rationale for dividing the K086 listed waste into three treatability groups and provide a complete characterization of the K086 solvent wash by describing the industry that generates the waste, the process generating the waste, and the available data characterizing the waste.

According to 40 CFR Part 261.32, the waste identified as K086 is specifically generated by ink formulating facilities and includes washes and sludges from both solvent cleaning and caustic/water cleaning. These solvent washes, solvent sludges, and caustic/water cleaning wastes are inherently different from a treatment perspective because of the chemical and physical properties of the wastes. These treatability groups have been divided as follows:

1. K086 solvent wash treatability group - Solvent washes from cleaning tubs and equipment used in formulation of ink from pigments, driers, soaps, and stabilizers containing chromium and lead.

2. K086 solvent sludge treatability group - Solvent sludges from cleaning tubs and equipment used in formulation of ink from pigment, driers, soaps and stabilizers containing chromium and lead.

3. K086 caustic/water treatability group - Caustic washes and sludges, or water washes and sludges from cleaning tubs and equipment used in formulation of ink from pigments, driers, soaps, and stabilizers containing chromium and lead.

The solvent wash treatability group has high organics concentrations and a low filterable solids concentration; as a consequence, liquid injection incineration can be applied. The solvent sludge treatability group also has a high organic content but does not allow for the use of

liquid injection incineration because of a high solids content. The caustic/water treatability group is considered by EPA as a wastewater containing organics and metals for which EPA would evaluate technologies other than incineration.

2.1 Industry Affected and Process Description

The Agency estimates that there are approximately 460 facilities that formulate ink and may generate K086 solvent wash waste. The locations of these facilities are provided on Figure 2-1 by State and in Table 2-1 by State and by EPA Region. While this waste can be generated in almost all of the listed facilities, a large percentage of the facilities generating K086 solvent wash are located in California, New Jersey, and States surrounding the Great Lakes.

Ink production involves the formulation of a desired product from various raw materials. The blending process takes place in mixing tubs ranging in size from 5 gallons to over 1,000 gallons. Because of the demand for various types of inks having different properties, the inks are made in batch operations.

Inks are a complex mixture of pigments, solvents, resins, soaps, plasticizers, and stabilizers, combined to give the desired properties for application. There are many types of pigments and dyes available to produce any color ink, but certain inorganic pigments are the primary source of lead and chromium. Chrome yellow is a compound consisting of lead and hexavalent chromium. Molybdate orange contains lead, chromium, and molybdenum.

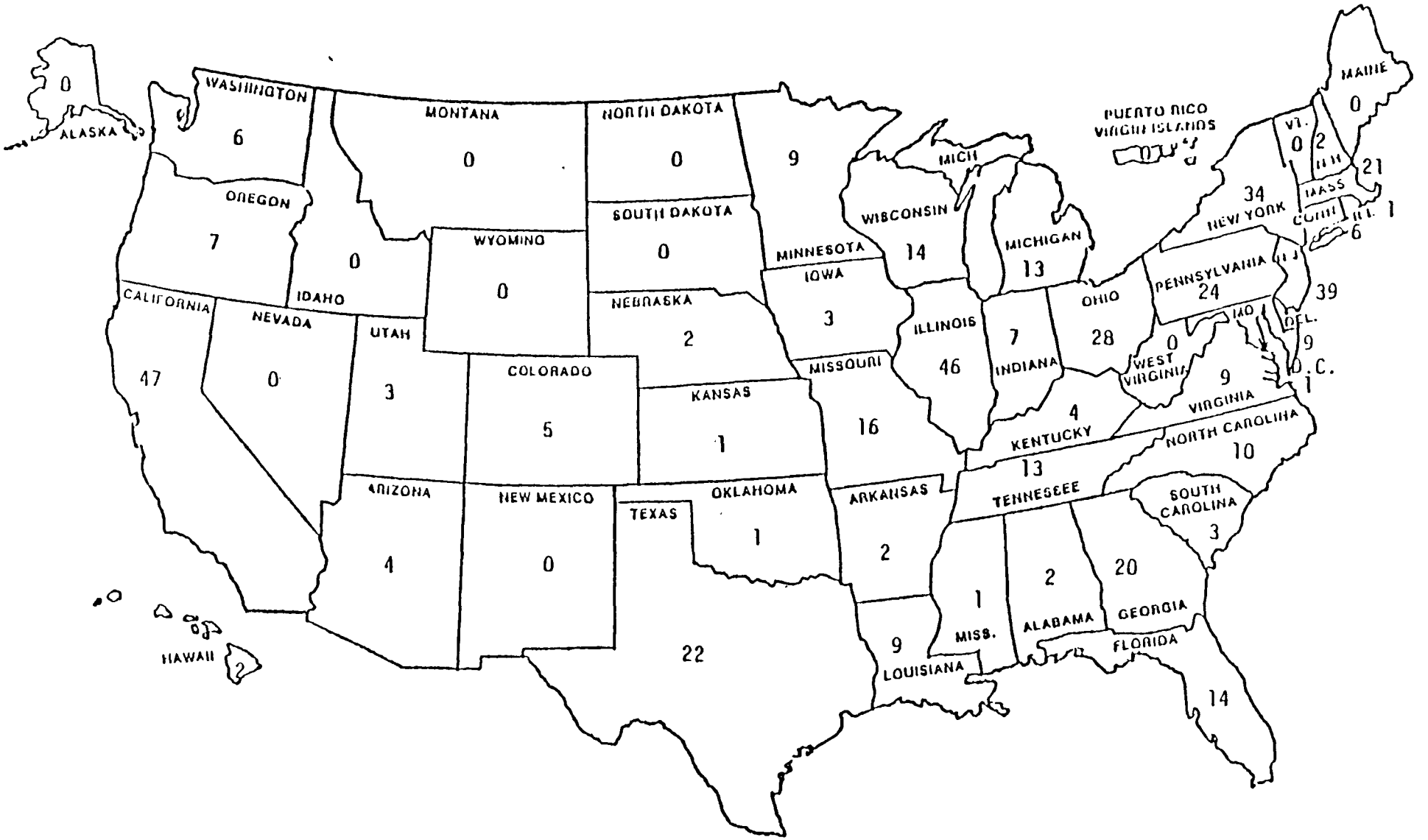

Figure 2-1
GEORGRAPHICAL DISTRIBUTION OF INK MANUFACTURING SITES

Reference: USEPA 1979

Table 2-1 Number of Ink Formulators by State and by EPA Region

EPA Region	State	Number of producers	EPA Region	Number of producers
I	Connecticut	6	I	30
	Massachusetts	21		
	New Hampshire	2		
	Rhode Island	1		
II	New Jersey	39	II	73
	New York	34		
III	D C.	1	III	43
	Maryland	9		
	Pennsylvania	24		
	Virginia	9		
IV	Alabama	2	IV	67
	Florida	14		
	Georgia	20		
	Kentucky	4		
	Mississippi	1		
	North Carolina	10		
	South Carolina	3		
	Tennessee	13		
V	Illinois	46	V	117
	Indiana	7		
	Michigan	13		
	Minnesota	9		
	Ohio	28		
	Wisconsin	14		
VI	Arkansas	2	VI	34
	Louisiana	9		
	Oklahoma	1		
	Texas	22		
VII	Iowa	5	VII	22
	Kansas	1		
	Missouri	16		
	Nebraska	2		
VIII	Colorado	5	VIII	8
	Utah	3		
IX	Arizona	4	IX	53
	California	47		
	Hawaii	2		
X	Oregon	7	X	13
	Washington	6		
			TOTAL	460

Reference USEPA 1979
U S Department of Commerce 1982

Ink formulation consists of a batch mixing of the pigments, vehicles, solvents, and other speciality additives (see Figure 2-2). The pigment may be in a powder or in a paste form. The even dispersion is accomplished by the use of ball mills, sand mills, or high speed mixers. The wetted form of pigment does not require as much dispersion as the powdered form. After each batch, the mills, mixers, and tubs must be washed clean of all residuals in preparation for the next batch. The method of equipment cleaning depends upon the type of ink produced.

In tubs used to formulate solvent-based or oil-based ink, solvent washes are needed to remove the residuals. The solvent wash can be used numerous times until the solvent becomes spent. The spent solvent can be used in the next batch of ink as part of the vehicle if the color desired is compatible with that of the previous batches; otherwise, it is disposed of as K086 solvent wash waste.

2.2 Waste Characterization

This section includes all waste characterization data available to the Agency for the untreated K086 solvent wash waste. The approximate percent concentrations of major constituents making up K086 solvent wash are listed in Table 2-2. The percent concentration in the waste was determined from the analyses of K086 solvent wash wastes presented in Table 2-3. It is important to realize that the composition of the waste can vary depending upon which solvent or solvents are used to clean the ink formulating equipment.

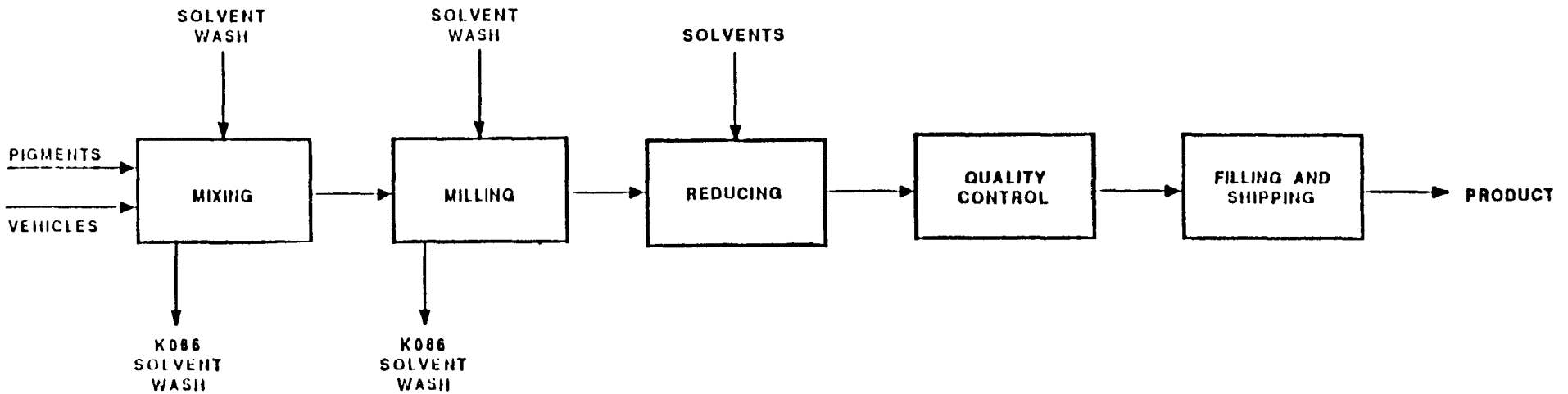

Figure 2-2. INK FORMULATION AND K086 WASTE GENERATION

Table 2-2 Major Constituent Analysis of Untreated K086 Solvent Wash

Major constituent	Solvent wash concentration (wt %)
Water	<0 5
BDAT list metal constituents (including lead and chromium)	<0.1
Spent solvents (may be BDAT list organic constituents)	97 0
Total Solids*	2 4

* These are volatile and nonvolatile solids remaining after the waste has been heated to 103-105°C. The solids may be organic ink pigments

Reference USEPA 1985

Table 2-3 BDAT Constituent Composition and Other Data

BDAT Reference No.	Analysis	Untreated K086 solvent wash waste charcterization (mg/kg) (a)	(b)
	BDAT Volatile Organics		
222	Acetone	CBI	-
226	Ethylbenzene	CBI	-
225	Ethyl acetate	CBI	256,000
229	Methyl isobutyl ketone	CBI	-
38	Methylene chloride	CBI	-
43	Toluene	CBI	-
215-217	Xylene (Total)	CBI	-
	BDAT Semivolatile Organics		
70	bis(2-Ethylhexyl)phthalate	CBI	-
232	Cyclohexanone	CBI	-
121	Napthalene	CBI	-
	BDAT Metals		
154	Antimony	CBI	-
156	Barium	CBI	0 54
158	Cadmium	CBI	4.3
159	Chromium	CBI	116
160	Copper	CBI	17
221	Hexavalent chromium	CBI	-
161	Lead	CBI	1 06
163	Nickel	CBI	2.4
164	Selenium	CBI	0 05
165	Silver	CBI	0 32
168	Zinc	CBI	1 1
	Other BDAT Inorganics		
169	Cyanide	CBI	-
171	Sulfide	CBI	-
	Other Parameters		
	pH	CBI	6 3
	Total solids	CBI	5,700
	Water content	CBI	-
	Heating value (Btu/lb)	CBI	13,600
	Total organic carbon	CBI	-
	Ash content	CBI	-
	Organic ink pigments	CBI	77,000
	Ethyl alcohol	CBI	667,000
	High flash point naptha compounds	CBI	-

CBI = Confidential Business Information
- = No analysis performed
(a) Reference USEPA 1987a
(b) Reference USEPA 1985

3. APPLICABLE/DEMONSTRATED TREATMENT TECHNOLOGIES

This section describes the applicable treatment technologies, demonstrated treatment technologies, and any available performance data pertinent to the treatment of K086 solvent wash. Since the waste characterization data in Section 2 reveal that K086 solvent wash wastes contain both BDAT list organics and BDAT list metals, the technologies considered applicable are those that destroy or recover the various BDAT list organic compounds and stabilize or remove the various BDAT list metals present in the K086 solvent wash wastes.

3.1 Applicable Treatment Technologies

The methodology used to determine the applicable technologies is called analysis of parameters affecting treatment selection. This analysis involves the identification of applicable treatment technologies based on the physical and chemical composition of the waste. The K086 solvent wash wastes primarily consist of the particular solvent(s) used in the cleaning process; these wastes also contain water, BDAT list metals, and solids with boiling points higher than 105°C. The waste also has a high heating value, a high total organic carbon (TOC) content, and a nondetectable ash content.

The applicable technologies that the Agency has identified for treatment of BDAT list organics are incineration, batch distillation, fractional distillation, and fuel substitution systems with air pollution control devices. Incineration is a technology that destroys the organic components in the waste. Batch distillation and fractional distillation

can be used to separate and recover components having different boiling points. The distillation technologies reduce the amount of material to be treated; nevertheless, residues from these processes still contain BDAT list organic concentrations and would still require further treatment prior to land disposal. Fuel substitution, like incineration, destroys the organic constituents in the waste. In fuel substitution, however, fuel value is also derived from the waste. The fuel substitution unit should be equipped with an air pollution control device to eliminate potential emissions of lead and chromium in the stack gas.

Incineration of K086 solvent wash results in the formation of a scrubber water treatment residual that may need metals treatment. For the BDAT list metals present in the wastewater residual (i.e., scrubber water), the applicable treatment technologies are chromium reduction followed by chemical precipitation and removal of precipitated solids, using settling or sludge filtration. Polishing filtration may also be applicable if the solids formed are difficult to settle or remove by the sludge filtration process. The chromium reduction process converts hexavalent chromium to trivalent chromium. Chemical precipitation removes dissolved metals from solution, and settling/sludge filtration removes suspended solids.

Treatment of the scrubber water generates a precipitated solids residual that may also require treatment. For the BDAT list metals present in these solid residuals, potentially applicable treatment technologies are stabilization and high temperature metals recovery. Stabilization immobilizes the metal constituents to minimize leaching.

High temperature metals recovery provides for recovery of metals from wastes primarily by volatilization of some of the metals, subsequent condensation, and collection. The process yields a metal product for reuse and reduces the amount of waste that needs to be land disposed.

It is important to mention that stabilization can be incorporated as part of the chemical precipitation process by the addition of excess lime in concentrations significantly greater than the stoichiometric amount; this treatment is sometimes referred to as lime stabilization. In some instances, when lime stabilization of the precipitated residual is performed as part of the chemical precipitation process, sludge filtration is the only additional treatment step necessary to minimize the leachability of the metals in the precipitated/stabilized waste. EPA considers the combined process to be effectively the same as stabilization of the precipitated residuals and will refer to the combination process as stabilization in the context of treatment for nonwastewaters. Relative to wastewaters, this treatment is chemical precipitation, as already discussed.

3.2 Demonstrated Treatment Technologies

The Agency believes that all the applicable technologies for organics treatment are demonstrated to treat K086 solvent wash since they are currently used to treat such wastes. The Agency has identified at least one facility using incineration, one facility using batch distillation, one facility using fractional distillation, and one facility using fuel substitution.

The Agency has not identified any facilities using chromium reduction followed by chemical precipitation and settling or sludge filtration on the scrubber water generated by incineration of K086 solvent wash. This treatment, however, is demonstrated on a metal-bearing wastewater that has similar parameters affecting treatment selection, and thus the Agency considers the treatment to be demonstrated for the K086 scrubber water. Sections 3.2.5 through 3.2.8 describe chromium reduction, chemical precipitation, settling filtration, and the parameters affecting selection of these treatment technologies. Performance data for chromium reduction precipitation and sludge filtration of the metal bearing wastewater are presented in Section 3.3. A comparison of these data to those of the K086 scrubber water shows that the parameters affecting treatment selection are similar.

The Agency has not identified any facilities using stabilization on the precipitate that would be generated by treatment of K086 scrubber water generated during incineration of K086 solvent wash. Stabilization, however, is used to treat metals in wastes (e.g., Envirite wastewater treatment precipitates) that have similar parameters affecting treatment selection. Thus, the Agency considers stabilization to be demonstrated for K086 wastewater treatment precipitates. Stabilization is described in Section 3.2.3. Performance data for stabilization of waste are presented in Section 3.3.

High temperature metals recovery has been identified as potentially applicable for treatment of K086 precipitated solids. At this time, EPA

does not have any treatment performance data for high temperature metals recovery of wastewater treatment precipitated solids; however, the data have been requested. When the data are received, EPA will continue to investigate the application and demonstration of high temperature metals recovery for treatment of the K086 solvent wash nonwastewaters such as the precipitated solids residual from wastewater treatment.

Detailed discussions of the high temperature metals recovery and the demonstrated technologies, including incineration, fuel substitution, stabilization, chromium reduction, chemical precipitation, polishing filtration, and sludge filtration, are presented below. Following the technology discussions is the technology performance data base for treatment of K086 solvent wash wastes.

3.2.1 Incineration

This section addresses the commonly used incineration technologies: liquid injection, rotary kiln, fluidized bed, and fixed hearth. A discussion is provided regarding the applicability of these technologies, the underlying principles of operation, a technology description, waste characteristics that affect performance, and finally important design and operating parameters. As appropriate the subsections are divided by type of incineration unit.

(1) Applicability and use of this technology

(a) Liquid injection. Liquid injection is applicable to wastes that have viscosity values sufficiently low so that the waste can be atomized in the combustion chamber. A range of literature maximum viscosity values are reported, with the low being 100 Saybolt seconds

universal (SSU) and the high being 10,000 SSU. It is important to note that viscosity is temperature dependent; while liquid injection may not be applicable to a waste at ambient conditions, it may be applicable when the waste is heated. Other factors that affect the use of liquid injection are particle size and the presence of suspended solids. Both of these waste parameters can cause plugging of the burner nozzle.

(b) Rotary kiln/fluidized bed/fixed hearth. These incineration technologies are applicable to a wide range of hazardous wastes. They can be used on wastes that contain high or low total organic content, high or low filterable solids, various viscosity ranges, and a range of other waste parameters. EPA has not found these technologies to be demonstrated on wastes that are composed essentially of metals with low organic concentrations. In addition, the Agency expects that some of the high metal content wastes may not be compatible with existing and future air emission limits without emission controls far more extensive than those currently in use.

(2) Underlying principles of operation

(a) Liquid injection. The basic operating principle of this incineration technology is that incoming liquid wastes are volatilized and then additional heat is supplied to the waste to destabilize the chemical bonds. Once the chemical bonds are broken, these constituents react with oxygen to form carbon dioxide and water vapor. The energy needed to destabilize the bonds is referred to as the energy of activation.

(b) Rotary kiln and fixed hearth. There are two distinct principles of operation for these incineration technologies, one for each of the chambers involved. In the primary chamber, energy, in the form of heat, is transferred to the waste to achieve volatilization of the various organic waste constituents. During this volatilization process some of the organic constituents oxidize to carbon dioxide and water vapor. In the secondary chamber, additional heat is supplied to overcome the energy requirements needed to destabilize the chemical bonds and allow the constituents to react with excess oxygen to form carbon dioxide and water vapor. The principle of operation for the secondary chamber is similar to that of liquid injection.

(c) Fluidized bed. The principle of operation for this incinerator technology is somewhat different from that for rotary kiln and fixed hearth incineration, in that there is only one chamber, which contains the fluidizing sand and a freeboard section above the sand. The purpose of the fluidized bed is to both volatilize and combust the waste. Destruction of the waste organics can be accomplished to a better degree in this chamber than in the primary chamber of the rotary kiln and fixed hearth because of (1) improved heat transfer from the fluidization of the waste using forced air and (2) the fact that the fluidization process provides sufficient oxygen and turbulence to convert the organics to carbon dioxide and water vapor. The freeboard generally does not have an afterburner; however, additional time is provided for conversion of

the organic constituents to carbon dioxide, water vapor, and hydrochloric acid if chlorine is present in the waste.

(3) Description of incineration technologies

(a) Liquid injection. The liquid injection system is capable of incinerating a wide range of gases and liquids. The combustion system has a simple design with virtually no moving parts. A burner or nozzle atomizes the liquid waste and injects it into the combustion chamber, where it burns in the presence of air or oxygen. A forced draft system supplies the combustion chamber with air to provide oxygen for combustion and turbulence for mixing. The combustion chamber is usually a cylinder lined with refractory (i.e., heat-resistant) brick and can be fired horizontally, vertically upward, or vertically downward. Figure 3-1 illustrates a liquid injection incineration system.

(b) Rotary kiln. A rotary kiln is a slowly rotating, refractory-lined cylinder that is mounted at a slight incline from the horizontal (see Figure 3-2). Solid wastes enter at the high end of the kiln, and liquid or gaseous wastes enter through atomizing nozzles in the kiln or afterburner section. Rotation of the kiln exposes the solids to the heat, vaporizes them, and allows them to combust by mixing with air. The rotation also causes the ash to move to the lower end of the kiln, where it can be removed. Rotary kiln systems usually have a secondary combustion chamber or afterburner following the kiln for further combustion of the volatilized components of solid wastes.

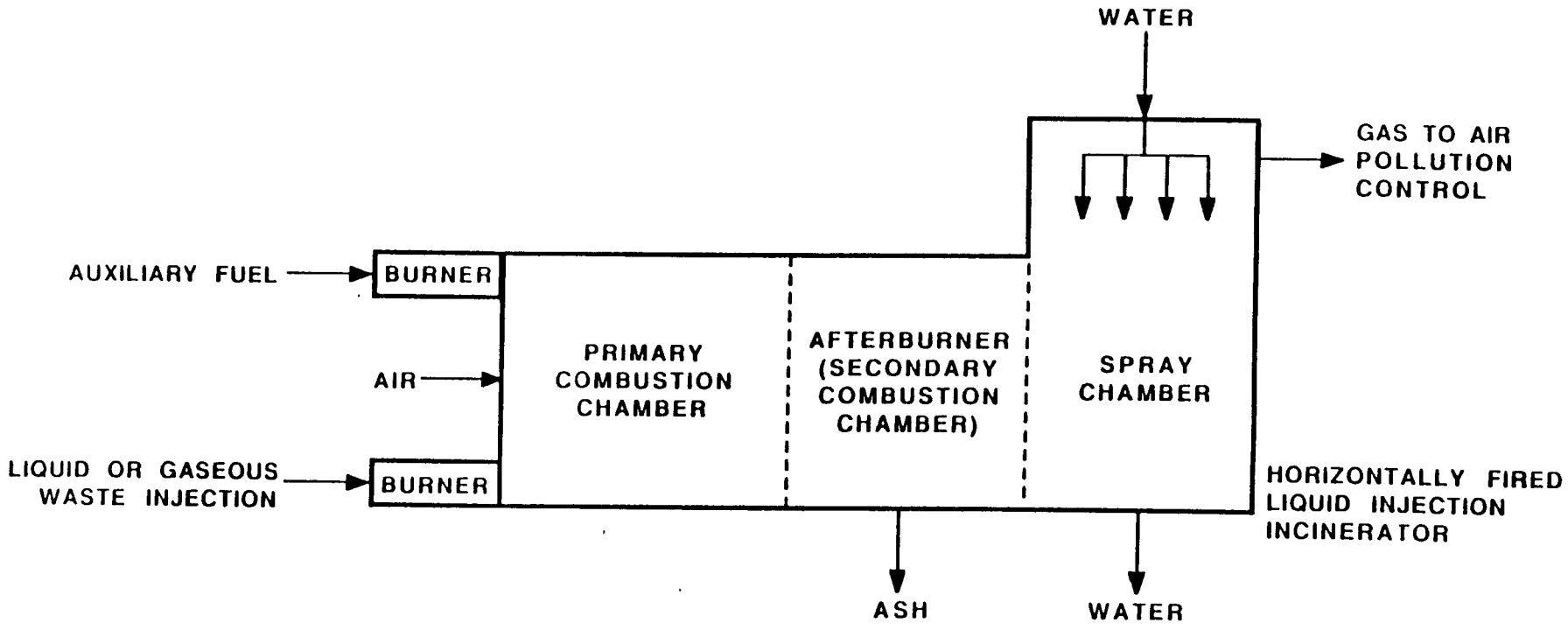

FIGURE 3-1
LIQUID INJECTION INCINERATOR

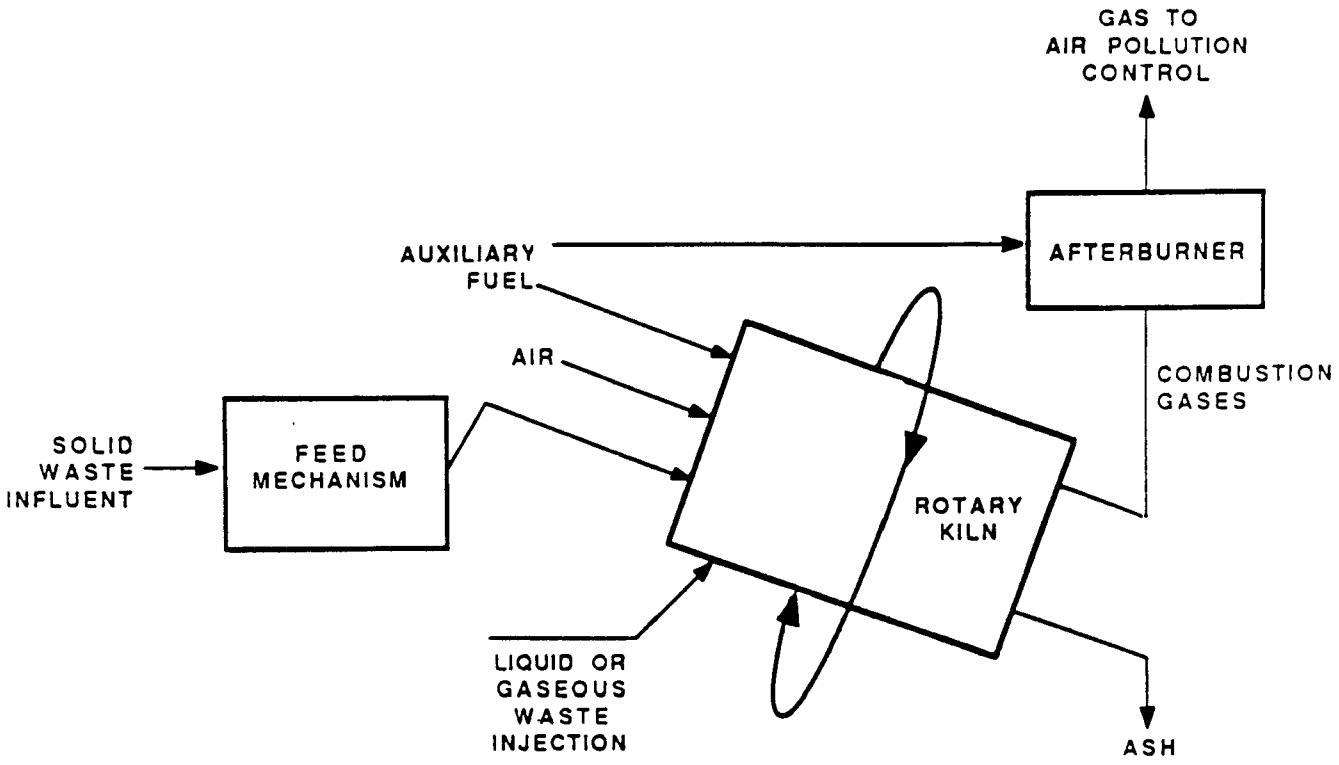

FIGURE 3-2
ROTARY KILN INCINERATOR

(c) Fluidized bed. A fluidized bed incinerator consists of a column containing inert particles such as sand, which is referred to as the bed. Air, driven by a blower, enters the bottom of the bed to fluidize the sand. Air passage through the bed promotes rapid and uniform mixing of the injected waste material within the fluidized bed. The fluidized bed has an extremely high heat capacity (approximately three times that of flue gas at the same temperature), thereby providing a large heat reservoir. The injected waste reaches ignition temperature quickly and transfers the heat of combustion back to the bed. Continued bed agitation by the fluidizing air allows larger particles to remain suspended in the combustion zone (See Figure 3-3).

(d) Fixed hearth. Fixed hearth incinerators, also called controlled air or starved air incinerators, are another major technology used for hazardous waste incineration. Fixed hearth incineration is a two-stage combustion process (see Figure 3-4). Waste is ram-fed into the first stage, or primary chamber, and burned at less than stoichiometric conditions. The resultant smoke and pyrolysis products, consisting primarily of volatile hydrocarbons and carbon monoxide, along with the normal products of combustion, pass to the secondary chamber. Here, additional air is injected to complete the combustion. This two-stage process generally yields low stack particulate and carbon monoxide emissions. The primary chamber combustion reactions and combustion gas are maintained at low levels by the starved air conditions so that particulate entrainment and carryover are minimized.

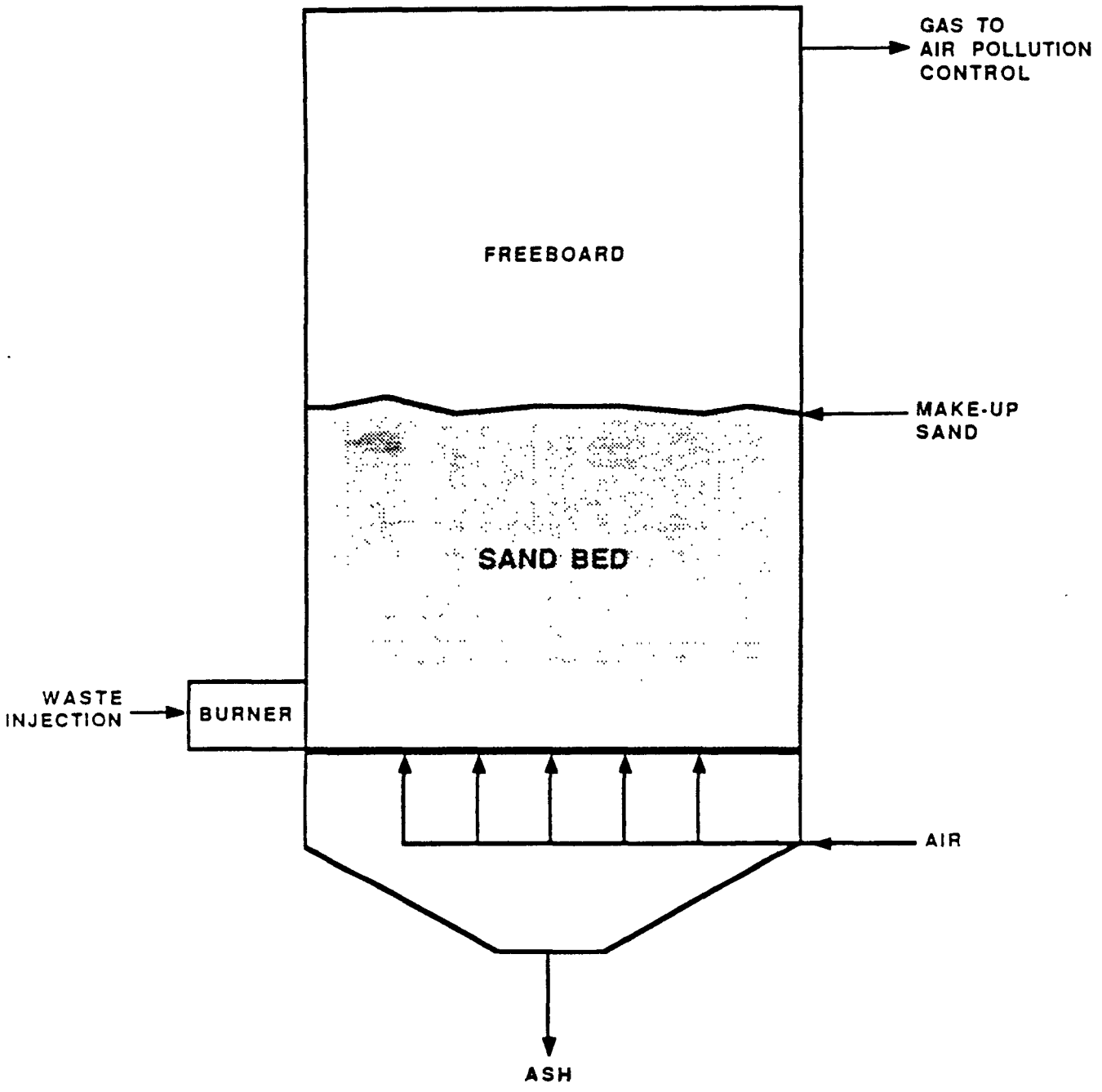

FIGURE 3-3
FLUIDIZED BED INCINERATOR

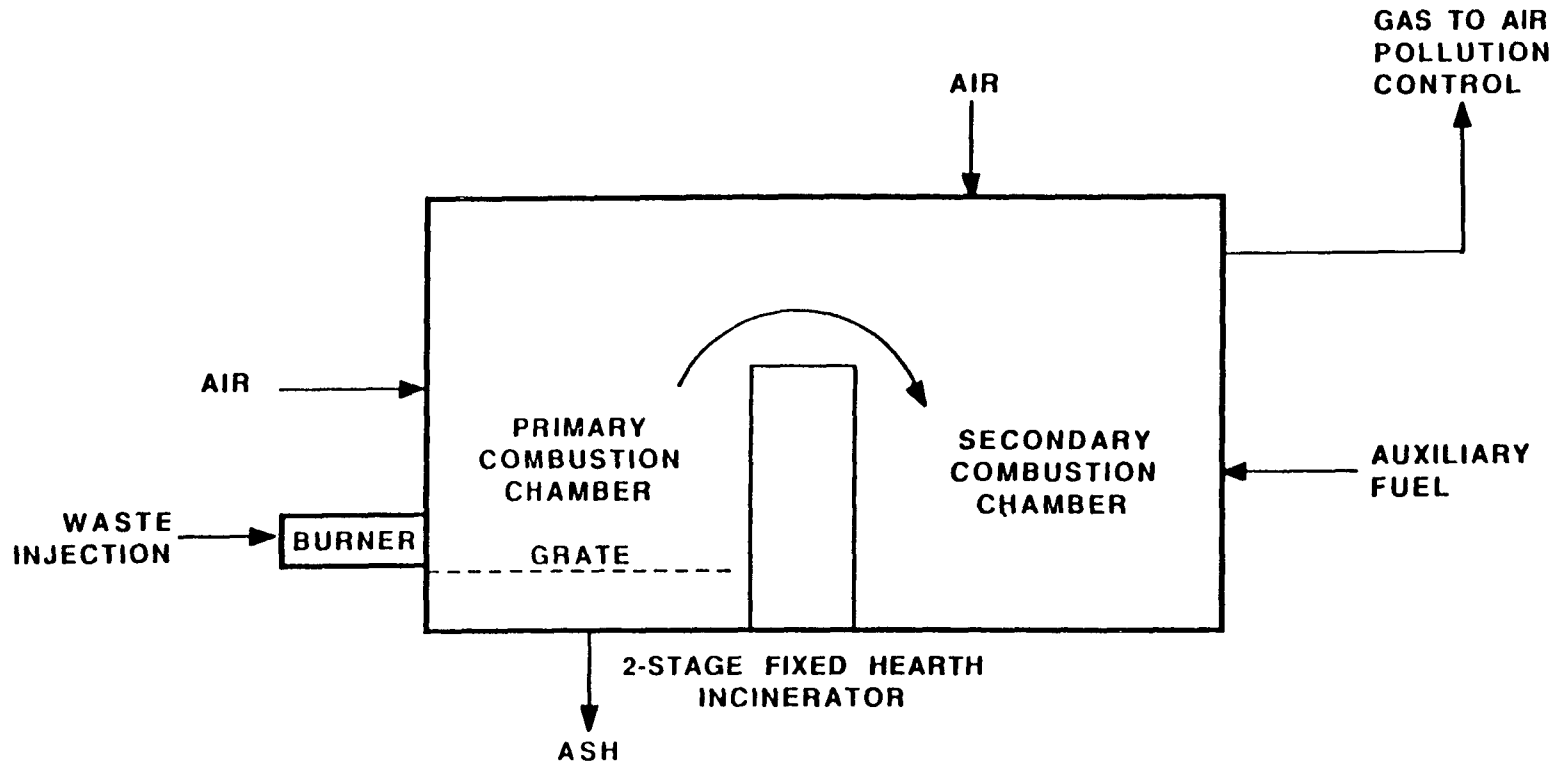

FIGURE 3-4
FIXED HEARTH INCINERATOR

(e) Air pollution controls. Following incineration of hazardous wastes, combustion gases are generally further treated in an air pollution control system. The presence of chlorine or other halogens in the waste requires a scrubbing or absorption step to remover hydrochloric acid and other halo-acids from the combustion gases. Ash in the waste is not destroyed in the combustion process. Depending on its composition, ash will either exit as bottom ash, at the discharge end of a kiln or hearth, for example, or as particulate matter (fly ash) suspended in the combustion gas stream. Particulate emissions from most hazardous waste combustion systems generally have particle diameters of less than one micron and require high-efficiency collection devices to minimize air emissions. In addition, scrubber systems provide an additional buffer against accidental releases of incompletely destroyed waste products as a result of poor combustion efficiency or combustion upsets, such as flameouts.

(4) Waste characteristics affecting performance (WCAP)

(a) Liquid injection. In determining whether liquid injection is likely to achieve the same level of performance on an untested waste as on a previously tested waste, the Agency will compare dissociation bond energies of the constituents in the untested and tested waste. This parameter is being used as a surrogate indicator of activation energy, which, as discussed previously, destabilizes molecular bonds. In theory, the bond dissociation energy would be equal to the activation energy;

however, in practice this is not always the case. Other energy effects (e.g., vibrational effects, the formation of intermediates, and interactions between different molecular bonds) may have a significant influence on activation energy.

Because of the shortcomings of bond energies in estimating activation energy, EPA analyzed other waste characteristic parameters to determine if these parameters would provide a better basis for transferring treatment standards from an untested waste to a tested waste. These parameters include heat of combustion, heat of formation, use of available kinetic data to predict activation energies, and general structural class. All of these were rejected for reasons provided below.

The heat of combustion measures only the difference in energy of the products and reactants; it does not provide information on the transition state (i.e., the energy input needed to initiate the reaction). Heat of formation is used as a predictive tool for whether reactions are likely to proceed; however, these data are not available for a significant number of hazardous constituents. Use of kinetic data was rejected because these data are limited and could not be used to calculate free energy values (ΔG) for the wide range of hazardous constituents to be addressed by this rule. Finally, EPA decided not to use structural classes because the Agency believes that evaluation of bond dissociation energies allows for a more direct determination of whether a constituent will be destabilized.

(b) Rotary kiln/fluidized bed/fixed hearth. Unlike liquid injection, these incineration technologies also generate a residual ash. Accordingly, in determining whether these technologies are likely to achieve the same level of performance on an untested waste as on a previously tested waste, EPA would need to examine the waste characteristics that affect volatilization of organics from the waste, as well as destruction of the organics, once volatilized. Relative to volatilization, EPA will examine thermal conductivity of the entire waste and boiling point of the various constituents. As with liquid injection, EPA will examine bond energies in determining whether treatment standards for scrubber water residuals can be transferred from a tested waste to an untested waste. Below is a discussion of how EPA arrived at thermal conductivity and boiling point as the best methods to assess volatilization of organics from the waste; the discussion relative to bond energies is the same for these technologies as for liquid injection and will not be repeated here.

(i) Thermal conductivity. Consistent with the underlying principles of incineration, a major factor with regard to whether a particular constituent will volatilize is the transfer of heat through the waste. In the case of rotary kiln, fluidized bed, and fixed hearth incineration, heat is transferred through the waste by three mechanisms: radiation, convection, and conduction. For a given incinerator, heat transferred through various wastes by radiation is more a function of the design and type of incinerator than of the waste being treated. Accordingly, the type of waste treated will have a minimal impact on the

amount of heat transferred by radiation. With regard to convection, EPA also believes that the type of heat transfer will generally be more a function of the type and design of incinerator than of the waste itself. However, EPA is examining particle size as a waste characteristic that may significantly impact the amount of heat transferred to a waste by convection and thus impact volatilization of the various organic compounds. EPA believes that the final type of heat transfer, conduction, will have the greatest impact on volatilization of organic constituents. To measure this characteristic, EPA will use thermal conductivity; an explanation of this parameter, as well as how it can be measured, is provided below.

Heat flow by conduction is proportional to the temperature gradient across the material. The proportionality constant, which is a property of the material, is referred to as the thermal conductivity. (Note: The analytical method that EPA has identified for measurement of thermal conductivity is named "Guarded, Comparative, Longitudinal Heat Flow Technique"; it is described in Appendix D.) In theory, thermal conductivity would always provide a good indication of whether a constituent in an untested waste would be treated to the same extent in the primary incinerator chamber as the same constituent in a previously tested waste.

In practice, thermal conductivity has some limitations in assessing the transferability of treatment standards; however, EPA has not identified a parameter that can provide a better indication of heat transfer characteristics of a waste. Below is a discussion of both the

limitations associated with thermal conductivity, as well as other parameters considered.

Thermal conductivity measurements, as part of a treatability comparison for two different wastes through a single incinerator, are most meaningful when applied to wastes that are homogeneous (i.e., major constituents are essentially the same). As wastes exhibit greater degrees of nonhomogeneity (e.g., significant concentration of metals in soil), thermal conductivity becomes less accurate in predicting treatability because the measurement essentially reflects heat flow through regions having the greatest conductivity (i.e., the path of least resistance) and not heat flow through all parts of the waste.

Btu value, specific heat, and ash content were also considered for predicting heat transfer characteristics. These parameters can no better account for nonhomogeneity than thermal conductivity; additionally, they are not directly related to heat transfer characteristics. Therefore, these parameters do not provide a better indication of the heat transfer that will occur in any specific waste.

(ii) Boiling point. Once heat is transferred to a constituent within a waste, then removal of this constituent from the waste will depend on its volatility. As a surrogate for volatility, EPA is using boiling point of the constituent. Compounds with lower boiling points have higher vapor pressures and, therefore, would be more likely to vaporize. The Agency recognizes that this parameter does not take into consideration the impact of other compounds in the waste on the boiling

point of a constituent in a mixture; however, the Agency is not aware of a better measure of volatility that can easily be determined.

(5) Incineration design and operating parameters

(a) Liquid injection. For a liquid injection unit, EPA's analysis of whether the unit is well designed will focus on (1) the likelihood that sufficient energy is provided to the waste to overcome the activation level for breaking molecular bonds and (2) whether sufficient oxygen is present to convert the waste constituents to carbon dioxide and water vapor. The specific design parameters that the Agency will evaluate to assess whether these conditions are met are temperature, excess oxygen, and residence time. Below is a discussion of why EPA believes these parameters to be important, as well as a discussion of how these parameters will be monitored during operation.

It is important to point out that, relative to the development of land disposal restriction standards, EPA is concerned with these design parameters only when a quench water or scrubber water residual is generated from treatment of a particular waste. If treatment of a particular waste in a liquid injection unit would not generate a wastewater stream, then the Agency, for purposes of land disposal treatment standards, would be concerned only with the waste characteristics that affect selection of the unit, not with the above-mentioned design parameters.

(i) Temperature. Temperature is important in that it provides an indirect measure of the energy available (i.e., Btu/hr) to overcome the activation energy of waste constituents. As the design temperature increases, the more likely it is that the molecular bonds will be destabilized and the reaction completed.

The temperature is normally controlled automatically through the use of instrumentation that senses the temperature and automatically adjusts the amount of fuel and/or waste being fed. The temperature signal transmitted to the controller can be simultaneously transmitted to a recording device, referred to as a strip chart, and thereby continuously recorded. To fully assess the operation of the unit, it is important to know not only the exact location in the incinerator at which the temperature is being monitored but also the location of the design temperature.

(ii) Excess oxygen. It is important that the incinerator contain oxygen in excess of the stiochiometric amount necessary to convert the organic compounds to carbon dioxide and water vapor. If insufficient oxygen is present, then destabilized waste constituents could recombine to the same or other BDAT list organic compounds and potentially cause the scrubber water to contain higher concentrations of BDAT list constituents than would be the case for a well-operated unit.

In practice, the amount of oxygen fed to the incinerator is controlled by continuous sampling and analysis of the stack gas. If the amount of oxygen drops below the design value, then the analyzer transmits a signal to the valve controlling the air supply, thereby

increasing the flow of oxygen to the afterburner. The analyzer simultaneously transmits a signal to a recording device so that the amount of excess oxygen can be continuously recorded. Again, as with temperature, it is important to know the location from which the combustion gas is being sampled.

(iii) Carbon monoxide. Carbon monoxide is an important operating parameter because it provides an indication of the extent to which the waste organic constituents are being converted to carbon dioxide and water vapor. An increase in the carbon monoxide level indicates that greater amounts of organic waste constituents are unreacted or partially reacted. Increased carbon monoxide levels can result from insufficient excess oxygen, insufficient turbulence in the combustion zone, or insufficient residence time.

(iv) Waste feed rate. The waste feed rate is important to monitor because it is correlated to the residence time. The residence time is associated with a specific Btu energy value of the feed and a specific volume of combustion gas generated. Prior to incineration, the Btu value of the waste is determined through the use of a laboratory device known as a bomb calorimeter. The volume of combustion gas generated from the waste to be incinerated is determined from an analysis referred to as an ultimate analysis. This analysis determines the amount of elemental constituents present, which include carbon, hydrogen, sulfur, oxygen, nitrogen, and halogens. Using this analysis plus the total amount of air added, the volume of combustion gas can be calculated. After both the Btu content and the expected combustion gas

volume have been determined, the feed rate can be fixed at the desired residence time. Continuous monitoring of the feed rate will determine whether the unit was operated at a rate corresponding to the designed residence time.

(b) Rotary kiln. For this incineration, EPA will examine both the primary and secondary chamber in evaluating the design of a particular incinerator. Relative to the primary chamber, EPA's assessment of design will focus on whether it is likely that sufficient energy will be provided to the waste to volatilize the waste constituents. For the secondary chamber, analogous to the sole liquid injection incineration chamber, EPA will examine the same parameters discussed previously under liquid injection incineration. These parameters will not be discussed again here.

The particular design parameters to be evaluated for the primary chamber are kiln temperature, residence time, and revolutions per minute. Below is a discussion of why EPA believes these parameters to be important, as well as a discussion of how these parameters will be monitored during operation.

(i) Temperature. The primary chamber temperature is important, in that it provides an indirect measure of the energy input (i.e., Btu/hr) available for heating the waste. The higher the temperature is designed to be in a given kiln, the more likely it is that the constituents will volatilize. As discussed earlier under "Liquid Injection," temperature should be continuously monitored and recorded.

Additionally, it is important to know the location of the temperature-sensing device in the kiln.

(ii) Residence time. This parameter is important in that it affects whether sufficient heat is transferred to a particular constituent for volatilization to occur. As the time that the waste is in the kiln is increased, a greater quantity of heat is transferred to the hazardous waste constituents. The residence time will be a function of the specific configuration of the rotary kiln, including the length and diameter of the kiln, the waste feed rate, and the rate of rotation.

(iii) Revolutions per minute (RPM). This parameter provides an indication of the turbulence that occurs in the primary chamber of a rotary kiln. As the turbulence increases, the quantity of heat transferred to the waste is also be expected to increase. However, as the RPM value increases, the residence time decreases, resulting in a reduction of the quantity of heat transferred to the waste. This parameter needs to be carefully evaluated because it provides a balance between turbulence and residence time.

(c) Fluidized bed. As discussed previously, in the section on "Underlying principles of operation," the primary chamber accounts for almost all of the conversion of organic wastes to carbon dioxide, water vapor, and acid gas (if halogens are present). The secondary chamber will generally provide additional residence time for thermal oxidation of the waste constituents. Relative to the primary chamber, the parameters that the Agency will examine in assessing the effectiveness of the design

are temperature, residence time, and bed pressure differential. The first two were discussed under "Rotary kiln" and will not be discussed here. The last, bed pressure differential, is important in that it provides an indication of the amount of turbulence and, therefore, indirectly the amount of heat supplied to the waste. In general, as the pressure drop increases, both the turbulence and heat supplied increase. The pressure drop through the bed should be continuously monitored and recorded to ensure that the design value is achieved.

(d) Fixed hearth. The design considerations for this incineration unit are similar to those for a rotary kiln with the exception that rate of rotation (i.e., RPM) is not an applicable design parameter. For the primary chamber of this unit, the parameters that the Agency will examine in assessing how well the unit is designed are the same as those discussed under "Rotary kiln"; for the secondary chamber (i.e., afterburner), the design and operating parameters of concern are the same as those previously discussed under "Liquid injection."

3.2.2 Fuel Substitution

Fuel substitution involves using hazardous waste as a fuel in industrial furnaces or in boilers for generation of steam. The hazardous waste may be blended with nonhazardous wastes (e.g., municipal sludge) and/or fossil fuels.

(1) Applicability and use of technology. Fuel substitution has been used with industrial waste solvents, refinery wastes, synthetic fibers/petrochemical wastes, and waste oils. It can also be used when

combusting other waste types produced during the manufacturing of pharmaceuticals, pulp and paper, and pesticides. These wastes can be handled in a solid, liquid, or gaseous form.

The most common types of units in which waste fuels are burned are industrial furnaces and industrial boilers. Industrial furnaces include a diverse variety of industrial processes that produce heat and/or products by burning fuels. They include blast furnaces, smelters, and coke ovens. Industrial boilers are units wherein fuel is used to produce steam for process and plant use. Industrial boilers typically use coal, oil, or gas as the primary fuel source.

A number of parameters affect the selection of fuel substitution. These are:

- Halogen content of the waste;
- Inorganic solids content (ash content) of the waste, particularly heavy metals;
- Heating value of the waste;
- Viscosity of the waste (for liquids);
- Filterable solids concentration (for liquids); and
- Sulfur content.

If halogenated organics are burned, halogenated acids and free halogen are among the products of combustion. These released corrosive gases may require subsequent treatment prior to venting to the atmosphere. Also, halogens and halogenated acids formed during combustion are likely to severely corrode boiler tubes and other process equipment. For this reason, halogenated wastes are blended into fuels

only at very low concentrations to minimize such problems. High chlorine content can also lead to the incidental production (at very low concentrations) of other hazardous compounds such as polychlorinated biphenyls (PCBs), polychlorinated dibenzo-p-dioxins (PCDDs), chlorinated dibenzofurans (PCDFs), and polychlorinated phenols.

High inorganic solids content (i.e., ash content) of wastes may cause two problems: (1) scaling in the boiler and (2) particulate air emissions. Scaling results from deposition of inorganic solids on the walls of the boiler. Particulate emissions are produced by noncombustible inorganic constituents that flow out of the boiler with the gaseous combustion products. Because of these problems, wastes with significant concentrations of inorganic materials are not usually handled in a boiler unless the boiler has an air pollution control system.

Industrial furnaces vary in their tolerance to inorganic constituents. Heavy metal concentrations, found in both halogenated and nonhalogenated wastes used as fuel, can cause environmental concern because they may be emitted in the gaseous emissions from the combustion process, in the ash residues, or in any produced solids. The partitioning of the heavy metals to these residual streams primarily depends on the volatility of the metal, waste matrix, and furnace design.

The heating value of the waste must be sufficiently high (either alone or in combination with other fuels) to maintain combustion temperatures consistent with efficient waste destruction and operation of the boiler or furnace. For many applications, only supplemental fuels

having minimum heating values of 4,400 to 5,600 kcal/kg (8,000 to 10,000 Btu/lb) are considered to be feasible. Below this value, the unblended fuel would not be likely to maintain a stable flame and its combustion would release insufficient energy to provide needed steam generation potential in the boiler or the necessary heat for an industrial furnace. Some wastes with heating values of less than 4,400 kcal/kg (8,000 Btu/lb) can be used if sufficient auxiliary fuel is employed to support combustion or if special designs are incorporated into the combustion device. Occasionally, for wastes with heating values higher than those of virgin fuels, blending with auxiliary fuel may be required to prevent overheating or overcharging the combustion device.

In combustion devices designed to burn liquid fuels, the viscosity of liquid waste must be low enough so that it can be atomized in the combustion chamber. If viscosity is too high, heating of storage tanks may be required prior to combustion. For atomization of liquids, a viscosity of 165 centistokes (750 SSU) or less is typically required.

If filterable material suspended in the liquid fuel prevents or hinders pumping or atomization, unacceptable combustion conditions may result.

Sulfur content in the waste may prevent burning of the waste because of potential atmospheric emissions of sulfur oxides. For instance, there are proposed Federal sulfur oxide emission regulations for certain new source industrial boilers (51 FR 22385). Air pollution control devices are available to remove sulfur oxides from the stack gases.

(2) Underlying principles of operation. For a boiler and most industrial furnaces there are two distinct principles of operation. Initially, energy in the form of heat is transferred to the waste to achieve volatilization of the various waste constituents. For liquids, volatilization energy may also be supplied by using pressurized atomization. The energy used to pressurize the liquid waste allows the atomized waste to break into smaller particles, thus enhancing its rate of volatilization. The volatilized constituents then require additional energy to destabilize the chemical bonds and allow the constituents to react with oxygen to form carbon dioxide and water vapor. The energy needed to destabilize the chemical bonds is referred to as the energy of activation.

(3) Physical description of the process. As stated, a number of industrial applications can use fuel substitution. Therefore, there is no one process description that will fit all of these applications. However, the following section provides a general description of industrial kilns (one form of industrial furnace) and industrial boilers.

(a) Kilns. Combustible wastes have the potential to be used as fuel in kilns and, for waste liquids, are often used with oil to co-fire kilns. Coal-fired kilns are capable of handling some solid wastes. In the case of cement kilns, there are usually no residuals requiring land disposal since any ash formed becomes part of the product or is removed by particulate collection systems and recycled back to the kiln. The

only residuals may be low levels of unburned gases escaping with combustion products. If this is the case, air pollution control devices may be required.

Three types of kilns are particularly applicable: cement kilns, lime kilns, and lightweight aggregate kilns.

(i) Cement kilns. The cement kiln is a rotary furnace, which is a refractory-lined steel shell used to calcine a mixture of calcium, silicon, aluminum, iron, and magnesium-containing minerals. The kiln is normally fired by coal or oil. Liquid and solid combustible wastes may then serve as auxiliary fuel. Temperatures within the kiln are typically between 1,380°C and 1,540°C (2,500°F to 2,800°F). To date, only liquid hazardous wastes have been burned in cement kilns.

Most cement kilns have a dry particulate collection device (i.e., either an electrostatic precipitator or a baghouse) with the collected fly ash recycled back to the kiln. Buildup of metals or other noncombustibles is prevented through their incorporation in the product cement. Since many types of cement require a source of chloride, most halogenated liquid hazardous wastes currently can be burned in cement kilns. Available information shows that scrubbers are not used.

(ii) Lime kilns. Quick-lime (CaO) is manufactured in a calcination process using limestone ($CaCO_3$) or dolomite ($CaCO_3$ and $MgCO_3$). These raw materials are also heated in a refractory-lined rotary kiln, typically to temperatures of 980°C to 1,260°C (1,800°F to 2,300°F). Lime kilns are less likely to burn

hazardous wastes than cement kilns because product lime is often added to potable water systems. Only one lime kiln currently burns hazardous waste in the U.S. That particular facility sells its product lime for use as flux or as refractory in blast furnaces.

As with cement kilns, any collected fly ash is recycled back to the lime kiln, resulting in no residual streams from the kiln. Available information shows that scrubbers are not used.

(iii) Lightweight aggregate kilns. Lightweight aggregate kilns heat clay to produce an expanded lightweight inorganic material used in portland cement formulations and other applications. The kiln has a normal temperature range of 1,100°C to 1,150°C (2,000°F to 2,100°F). Lightweight aggregate kilns are less amenable to combustion of hazardous wastes as fuels than the other kilns described above because of the lack of material in the kiln to adsorb halogens. As a result, burning of halogenated organics in these kilns would likely require afterburners to ensure complete destruction of the halogenated organics and scrubbers to control acid gas production. Such controls would produce a wastewater residual stream subject to treatment standards.

(b) Industrial boilers. A boiler is a closed vessel in which water is transformed into steam by the application of heat. Normally, heat is supplied by the combustion of pulverized coal, fuel oil, or gas. These fuels are fired into a combustion chamber with nozzles and burners that provide mixing with air. Liquid wastes and granulated solid wastes (in the case of grate-fired boilers) can be burned as auxiliary fuel in a

boiler. Few grate-fired boilers burn hazardous wastes, however. For liquid-fired boilers, residuals requiring land disposal are generated only when the boiler is shut down and cleaned. This is generally done once or twice per year. Other residuals from liquid-fired boilers would be the gas emission stream, which would consist of any products of incomplete combustion, along with the normal combustion products. For example, chlorinated wastes would produce acid gases. In this case, air pollution control devices may be required. For solid fired boilers, an ash normally is generated. This ash may contain residual amounts of organics from the blended waste/fuels, as well as noncombustible materials. Land disposal of this ash would require compliance with applicable BDAT treatment standards.

(4) Waste characteristics affecting performance. For cement kilns and lime kilns and for lightweight aggregate kilns burning nonhalogenated wastes (i.e., no scrubber is needed to control acid gases), no residual waste streams would be produced. Any noncombustible material in the waste would leave the kiln in the product stream. As a result, in transferring standards EPA would not examine waste characteristics affecting performance but rather would determine the applicability of fuel substitution. That is, EPA would investigate the parameters affecting treatment selection. As mentioned previously, for kilns these parameters are Btu content, percent filterable solids, halogenated organics content, viscosity, and sulfur content.

Lightweight aggregate kilns burning halogenated organics and boilers burning wastes containing any noncombustibles will produce residual streams subject to treatment standards. In determining whether fuel substitution is likely to achieve the same level of performance on an untreated waste as on a previously treated waste, EPA will examine (1) relative volatility of the waste constituents, (2) the heat transfer characteristics (for solids) and (3) the activation energy for combustion.

(a) Relative volatility. The term relative volatility (α) refers to the ease with which a substance present in a solid or liquid waste will vaporize from that waste upon application of heat from an external source. Hence, it bears a relationship to the equilibrium vapor pressure of the substance.

EPA recognizes that the relative volatilities cannot be measured or calculated directly for the types of wastes generally treated in an industrial boiler or furnace. The Agency believes that the best measure of relative volatility is the boiling point of the various hazardous constituents and will, therefore, use this parameter in assessing volatility of the organic constituents.

(b) Heat transfer characteristics. Consistent with the underlying principles of combustion in aggregate kilns or boilers, a major factor with regard to whether a particular constituent will volatilize is the transfer of heat through the waste. In the case of industrial boilers burning solid fuels, heat is transferred through the waste by three mechanisms: radiation, convection, and conduction. For a

given boiler, it can be assumed that the type of waste will have a minimal impact on the heat transferred from radiation. With regard to convection, EPA believes that the range of wastes treated would exhibit similar properties with regard to the amount of heat transferred by convection. Therefore, EPA will not evaluate radiation convection heat transfer properties of wastes in determining similar treatability. For solids, the third heat transfer mechanism, conductivity, is the one principally operative or most likely to change between wastes.

Using thermal conductivity measurements as part of a treatability comparison for two different wastes through a given boiler or furnace is most meaningful when applied to wastes that are homogeneous. As wastes exhibit greater degrees of nonhomogeneity, thermal conductivity becomes less accurate in predicting treatability because the measurement essentially reflects heat flow through regions having the greatest conductivity (i.e., the path of least resistance and not heat flow through all parts of the waste). Nevertheless, EPA has not identified a better alternative to thermal conductivity, even for wastes that are nonhomogeneous.

Other parameters considered for predicting heat transfer characteristics were Btu value, specific heat, and ash content. These parameters can neither better account for nonhomogeneity nor better predict heat transferability through the waste.

(c) Activation energy. Given an excess of oxygen, an organic waste in an industrial furnace or boiler would be expected to convert to

carbon dioxide and water vapor, provided that the activation energy is achieved. Activation energy is the quantity of heat (energy) needed to destabilize molecular bonds and create reactive intermediates so that the oxidation (combustion) reaction will proceed to completion. As a measure of activation energy, EPA is using bond dissociation energies. In theory, the bond dissociation energy would be equal to the activation energy; however, in practice this is not always the case.

In some instances, bond energies will not be available and will have to be estimated or other energy effects (e.g., vibrational effects) and other reactions will have a significant influence on activation energy. Because of the shortcomings of bond energies in estimating activation energy, EPA analyzed other waste characteristic parameters to determine whether these parameters would provide a better basis for transferring treatment standards from an untested waste to a tested waste. These parameters included heat of combustion, heat of formation, use of available kinetic data to predict activation energies, and general structural class. All of these were rejected for the reasons provided below.

The heat of combustion measures only the difference in energy of the products and reactants; it does not provide information on the transition state (i.e., the energy input needed to initiate the reaction). Heat of formation is used as a predictive tool for whether reactions are likely to proceed; however, there are a significant number of hazardous constituents for which these data are not available. Use of available

kinetic data was rejected because while such data could be used to calculate some free energy values (ΔG), they could not be used for the wide range of hazardous constituents. Finally, EPA decided not to use structural classes because the Agency believes that evaluation of bond dissociation energies allows for a more direct comparison.

(5) Design and operating parameters

(a) Design parameters. Cement kilns and lime kilns, along with aggregate kilns burning nonhalogenated wastes, produce no residual streams. Their design and operation are such that any wastes that are incompletely destroyed will be contained in the product. As a result, the Agency will not look at design and operating values for such devices since treatment, per se, cannot be measured through detection of constituents in residual streams. In this instance it is important merely to ensure that the waste is appropriate for combustion in the kilns and that the kiln is operated in a manner that will produce a usable product.

Specifically, cement, lime, and aggregate kilns are only demonstrated on liquid hazardous wastes. Such wastes must be sufficiently free of filterable solids to avoid plugging the burners at the hot end of the kiln. Viscosity also must be low enough to inject the waste into the kiln through the burners. The sulfur content is not a concern unless the concentration in the waste is high enough to exceed Federal, State, or local air pollution standards promulgated for industrial boilers.

The design parameters that normally affect the operation of an industrial boiler (and aggregate kilns with residual streams) with respect to hazardous waste treatment are (1) the design temperature, (2) the design retention time of the waste in the combustion chamber, and (3) the turbulence in the combustion chamber. Evaluation of these parameters would be important in determining whether an industrial boiler or industrial furnace is adequately designed for effective treatment of hazardous wastes. The rationale for selection of three parameters is given below.

(i) Design temperature. Industrial boilers are generally designed based on their steam generation potential (Btu output). This factor is related to the design combustion temperature, which in turn depends on the amount of fuel burned and its Btu value. The fuel feed rates and combustion temperatures of industrial boilers are generally fixed based on the Btu values of fuels normally handled (e.g., No. 2 versus No. 6 fuel oils). When wastes are to be blended with fossil fuels for combustion, the blending, based on Btu values, must be such that the resulting Btu value of the mixture is close to that of the fuel value used in design of the boiler. Industrial furnaces also are designed to operate at specific ranges of temperature to produce the desired product (e.g., lightweight aggregate). The blended waste/fuel mixture should be capable of maintaining the design temperature range.

(ii) Retention time. A sufficient retention time of combustion products is normally necessary to ensure that the hazardous substances

being combusted (or formed during combustion) are completely oxidized. Retention times on the order of a few seconds are normally needed at normal operating conditions. For industrial furnaces, as well as boilers, the retention time is a function of the size of the furnace and the fuel feed rates. For most boilers and furnaces, the retention time usually exceeds a few seconds.

(iii) Turbulence. Boilers are designed so that fuel and air are intimately mixed. This helps ensure that complete combustion takes place. The shape of the boiler and the method of fuel and air feed influence the turbulence required for good mixing. Industrial furnaces also are designed for turbulent mixing where fuel and air are mixed.

(b) Operating parameters. The operating parameters that normally affect the performance of an industrial boiler and many industrial furnaces with respect to treatment of hazardous wastes are (1) air flow rate, (2) fuel feed rate, (3) steam pressure or rate of production, and (4) temperature. EPA believes that these four parameters will be used to determine whether an industrial boiler burning blended fuels containing hazardous waste constituents is properly operated. The rationale for selection of these four operating parameters is given below. Most industrial furnaces will monitor similar parameters, but some exceptions are noted below.

(i) Air feed rate. An important operating parameter in boilers and many industrial furnaces is the oxygen content in the flue gas, which is a function of the air feed rate. Stable combustion of a fuel

generally occurs within a specific range of air-to-fuel ratios. An oxygen analyzer in the combustion gases can be used to control the feed ratio of air to fuel to ensure complete thermal destruction of the waste and efficient operation of the boiler. When necessary, the air flow rate can be increased or decreased to maintain proper fuel-to-oxygen ratios. Some industrial furnaces do not completely combust fuels (e.g., coke ovens and blast furnaces); hence, oxygen concentration in the flue gas is a meaningless variable.

(ii) Fuel feed rate. The rate at which fuel is injected into the boiler or industrial furnace will determine the thermal output of the system per unit of time (Btu/hr). If steam is produced, steam pressure monitoring will indirectly determine if the fuel feed rate is adequate. However, various velocity and mass measurement devices can be used to monitor fuel flow directly.

(iii) Steam pressure or rate of production. Steam pressure in boilers provides a direct measure of the thermal output of the system and is directly monitored by use of in-system pressure gauges. Increases or decreases in steam pressure can be effected by increasing or decreasing the fuel and air feed rates within certain operating design limits. Most industrial furnaces do not produce steam, but instead produce a product (e.g., cement, aggregate) and monitor the rate of production.

(iv) Temperature. Temperatures are monitored and controlled in industrial boilers to ensure the quality and flow rate of steam. Therefore, complex monitoring systems are frequently installed in the

combustion unit to provide a direct reading of temperature. The efficiency of combustion in industrial boilers is dependent on combustion temperatures. Temperature may be adjusted to design settings by increasing or decreasing air and fuel feed rate.

Wastes should not be added to primary fuels until the boiler temperature reaches the minimum needed for destruction of the wastes. Temperature instrumentation and control should be designed to stop waste addition in the event of process upsets.

Monitoring and control of temperature in industrial furnaces are also critical to the product quality; e.g., lime, cement, or aggregate kilns, which require minimum operating temperatures. Kilns have very high thermal inertia in the refractory and in-process product, high residence times, and high air flow rates, so that even in the case of a momentary stoppage of fuel flow to the kiln, organic constituents are likely to continue to be destroyed. The main operational control required for wastes burned in kilns is to stop waste flow in the event of low kiln temperature, loss of the electrical power to the combustion air fan, and loss of primary fuel flow.

(v) Other Operating Parameters. In addition to the four operating parameters discussed above, EPA considered and then discarded one additional parameter. Fuel-to-waste blending ratios were also considered. However, while the blending is done to yield a uniform Btu content fuel, blending ratios will vary widely, depending on the Btu content of the wastes and fuels being used.

3.2.3 Stabilization

Stabilization refers to a broad class of treatment processes that chemically reduce the mobility of hazardous constituents in a waste. Solidification and fixation are other terms that are sometimes used synonymously for stabilization or to describe specific variations within the broader class of stabilization. Related technologies are encapsulation and thermoplastic binding; however, EPA considers these technologies to be distinct from stabilization in that the operational principles are significantly different.

(1) Applicability and use of stabilization. Stabilization is used when a waste contains metals that will leach from the waste when it is contacted by water. In general, this technology is applicable to wastes containing BDAT list metals and having a high filterable solids content, low TOC content, and low oil and grease content. This technology is commonly used to treat residuals generated from treatment of electroplating wastewaters. For some wastes, an alternative to stabilization is metal recovery.

(2) Underlying principles of operation. The basic principle underlying this technology is that stabilizing agents and other chemicals are added to a waste in order to minimize the amount of metal that leaches. The reduced leachability is accomplished by the formation of a lattice structure and/or chemical bonds that bind the metals to the solid matrix and, thereby, limit the amount of metal constituents that can be

leached when water or a mild acid solution comes into contact with the waste material.

There are two principal stabilization processes used--cement-based and lime-based. A brief discussion of each is provided below. In both cement-based and lime/pozzolan-based techniques, the stabilizing process can be modified through the use of additives, such as silicates, that control curing rates or enhance the properties of the solid material.

(a) Portland cement-based process. Portland cement is a mixture of powdered oxides of calcium, silica, aluminum, and iron, produced by kiln burning of materials rich in calcium and silica at high temperatures (i.e., 1400°C to 1500°C or 2550°F to 2730°F). When the anhydrous cement powder is mixed with water, hydration occurs and the cement begins to set. The chemistry involved is complex because many different reactions occur depending on the composition of the cement mixture.

As the cement begins to set, a colloidal gel of indefinite composition and structure is formed. Over a period of time, the gel swells and forms a matrix composed of interlacing, thin, densely packed silicate fibrils. Constituents present in the waste slurry (e.g., hydroxides and carbonates of various heavy metals), are incorporated into the interstices of the cement matrix. The high pH of the cement mixture tends to keep metals in the form of insoluble hydroxide and carbonate salts. It has been hypothesized that metal ions may also be incorporated

into the crystal structure of the cement matrix, but this hypothesis has not been verified.

(b) Lime/pozzolan-based process. Pozzolan, which contains finely divided, noncrystalline silica (e.g., fly ash or components of cement kiln dust), is a material that is not cementitious in itself but becomes so upon the addition of lime. Metals in the waste are converted to silicates or hydroxides, which inhibit leaching. Additives, again, can be used to reduce permeability and thereby further decrease leaching potential.

(3) Description of the stabilization process. In most stabilization processes, the waste, stabilizing agent, and other additives, if used, are mixed and then pumped to a curing vessel or area and allowed to cure. The actual operation (equipment requirements and process sequencing) will depend on several factors such as the nature of the waste, the quantity of the waste, the location of the waste in relation to the disposal site, the particular stabilization formulation to be used, and the curing rate. After curing, the solid formed is recovered from the processing equipment and shipped for final disposal.

In instances where waste contained in a lagoon is to be treated, the material should be first transferred to mixing vessels where stabilizing agents are added. The mixed material is then fed to a curing pad or vessel. After curing, the solid formed is removed for disposal. Equipment commonly used also includes facilities to store waste and chemical additives. Pumps can be used to transfer liquid or light sludge

wastes to the mixing pits and pumpable uncured wastes to the curing site. Stabilized wastes are then removed to a final disposal site.

Commercial concrete mixing and handling equipment generally can be used with wastes. Weighing conveyors, metering cement hoppers, and mixers similar to concrete batching plants have been adapted in some operations. Where extremely dangerous materials are being treated, remote-control and in-drum mixing equipment, such as that used with nuclear waste, can be employed.

(4) Waste characteristics affecting performance. In determining whether stabilization is likely to achieve the same level of performance on an untested waste as on a previously tested waste, the Agency will focus on the characteristics that inhibit the formation of either the chemical bonds or the lattice structure. The four characteristics EPA has identified as affecting treatment performance are the presence of (1) fine particulates, (2) oil and grease, (3) organic compounds, and (4) certain inorganic compounds.

(a) Fine particulates. For both cement-based and lime/pozzolan-based processes, the literature states that very fine solid materials (i.e., those that pass through a No. 200 mesh sieve, 74 um particle size) can weaken the bonding between waste particles and cement by coating the particles. This coating can inhibit chemical bond formation and decrease the resistance of the material to leaching.

(b) Oil and grease. The presence of oil and grease in both cement-based and lime/pozzolan-based systems results in the coating of

waste particles and the weakening of the bonding between the particle and the stabilizing agent. This coating can inhibit chemical bond formation, thereby decreasing the resistance of the material to leaching.

(c) Organic compounds. The presence of organic compounds in the waste interferes with the chemical reactions and bond formation, which inhibits curing of the stabilized material. This results in a stabilized waste having decreased resistance to leaching.

(d) Sulfate and chlorides. The presence of certain inorganic compounds will interfere with the chemical reactions, weakening bond strength and prolonging setting and curing time. Sulfate and chloride compounds may reduce the dimensional stability of the cured matrix, thereby increasing leachability potential.

Accordingly, EPA will examine these constituents when making decisions regarding transfer of treatment standards based on stabilization.

(5) Design and operating parameters. In designing a stabilization system, the principal parameters that are important to optimize so that the amount of leachable metal constituents is minimized are (1) selection of stabilizing agents and other additives, (2) ratio of waste to stabilizing agents and other additives, (3) degree of mixing, and (4) curing conditions.

(a) Selection of stabilizing agents and other additives. The stabilizing agent and additives used will determine the chemistry and structure of the stabilized material and, therefore, will affect the

leachability of the solid material. Stabilizing agents and additives must be carefully selected based on the chemical and physical characteristics of the waste to be stabilized. For example, the amount of sulfates in a waste must be considered when a choice is being made between a lime/pozzolan-based system and a portland cement-based system.

To select the type of stabilizing agents and additives, the waste should be tested in the laboratory with a variety of materials to determine the best combination.

(b) Amount of stabilizing agents and additives. The amount of stabilizing agents and additives is a critical parameter in that sufficient stabilizing materials are necessary in the mixture to bind the waste constituents of concern properly, thereby making them less susceptible to leaching. The appropriate weight ratios of waste to stabilizing agent and other additives are established empirically by setting up a series of laboratory tests that allow separate leachate testing of different mix ratios. The ratio of water to stabilizing agent (including water in waste) will also impact the strength and leaching characteristics of the stabilized material. Too much water will cause low strength; too little will make mixing difficult and, more importantly, may not allow the chemical reactions that bind the hazardous constituents to be fully completed.

(c) Mixing. The conditions of mixing include the type and duration of mixing. Mixing is necessary to ensure homogeneous distribution of the waste and the stabilizing agents. Both undermixing

and overmixing are undesirable. The first condition results in a nonhomogeneous mixture; therefore, areas will exist within the waste where waste particles are neither chemically bonded to the stabilizing agent nor physically held within the lattice structure. Overmixing, on the other hand, may inhibit gel formation and ion adsorption in some stabilization systems. As with the relative amounts of waste, stabilizing agent, and additives within the system, optimal mixing conditions generally are determined through laboratory tests. During treatment it is important to monitor the degree (i.e., type and duration) of mixing to ensure that it reflects design conditions.

(d) Curing conditions. The curing conditions include the duration of curing and the ambient curing conditions (temperature and humidity). The duration of curing is a critical parameter to ensure that the waste particles have had sufficient time in which to form stable chemical bonds and/or lattice structures. The time necessary for complete stabilization depends upon the waste type and the stabilization used. The performance of the stabilized waste (i.e., the levels of constituents in the leachate) will be highly dependent upon whether complete stabilization has occurred. Higher temperatures and lower humidity increase the rate of curing by increasing the rate of evaporation of water from the solidification mixtures. If temperatures are too high, however, the evaporation rate can be excessive and result in too little water being available for completion of the stabilization

reaction. The duration of the curing process should also be determined during the design stage and typically will be between 7 and 28 days.

3.2.4 High Temperature Metals Recovery

High temperature metals recovery (HTMR) provides for recovery of metals from wastes primarily by volatilization and collection. The process yields a metal product or products for reuse and reduces the concentration of metals in the residual. This process also significantly reduces the amount of treated waste that needs to be land disposed.

There are a number of different types of high temperature metals recovery systems. These systems generally differ from one another relative to the source of energy and the method of recovery. Such HTMR systems include the rotary kiln process, plasma arc reactor, rotary hearth/electric furnace system, molten slag reactor, and flame reactor. This technology is different from retorting in that HTMR is conducted in a carbon reducing atmosphere, while the retorting process simply vaporizes the untreated metal. Retorting is discussed in a separate technology section.

(1) Applicability and use of high temperature metals recovery. This process is applicable to wastes containing BDAT list metals, low water content (or a water content that can be either blended to the required level or lowered by dewatering), and low concentration of organics. This technology is applicable to a wide range of metal salts including cadmium, chromium, lead, mercury, nickel, and zinc.

HTMR is generally not used for mercury-containing wastes even though mercury will volatilize readily at the process temperatures present in high temperature units. The rotary kiln recovery process is one example of this technology; it has been applied to zinc-bearing wastes as an upgrading step that yields a zinc oxide product for further refinement and subsequent reuse. Although this technology was originally developed in the 1920s for upgrading zinc from ores, it has recently been applied to electric furnace dust from the steel-making industry.

(2) Underlying principles of operation. The basic principle of operation for this technology is that metals are separated from a waste through volatilization in a reducing atmosphere in which carbon is the reducing compound. An example chemical reaction would be:

$$2ZnO + C \rightarrow 2Zn + CO_2.$$

In some cases, the waste contains not only BDAT list metal constituents that can be volatilized but also nonvolatile BDAT list metals as well. In such cases, the HTMR process can yield two recoverable product streams. Whether such recovery can be accomplished, however, depends on the type and concentration of metals in the original waste stream. Below is a discussion of the recovery techniques for the volatile stream, as well as for the waste material that is not volatilized.

(a) Recovery of volatilized metals. The volatilized metals can be recovered in the metallic form or as an oxide. In the case of the metallic form, recovery is accomplished by condensation alone, while in

the case of an oxide, it is accomplished by reoxidation, condensation, and the subsequent collection of the metal oxide particulates in a baghouse. There is no difference between these two types of metal product recovery systems relative to the kinds of waste that can be treated; the difference is simply reflected in a facility's preference relative to product purity. In the former case, the direct condensation of metals, while more costly, allows for the separation and collection of metals in a relatively uncontaminated form; in the latter case, the metals are collected as a combination of several metal oxides. If necessary, this combination of metal oxides could be further processed to produce individual metal products of increased purity.

(b) Less volatile treatment residual. The fraction of the waste that is not originally volatilized has three possible dispositions: (1) the material can be used directly as a product (e.g., a waste residual containing mostly metallic iron can be reused directly in steel making); (2) the material can be reused after further processing (e.g., a waste residual containing oxides of iron, chromium, and nickel can be reduced to the metallic form and then recovered for use in the manufacture of stainless steel); and (3) the material has no recoverable value and is land disposed as a slag.

(3) Description of high temperature metals recovery process. The process essentially consists of four operations: (1) a blending operation to control feed parameters, (2) high temperature processing, (3) a product collection system, and (4) handling of the less volatile treated

residual. A generic schematic diagram for high temperature metals recovery is shown in Figure 3-5.

(a) Blending. For the system shown, variations in feeds are minimized by blending wastes from different sources. Prior to feeding the kiln, fluxing agents are added to the waste. Carbon is also added to the waste as required. The fluxes (limestone or sand) are added to react with certain waste components in order to prevent their volatilization and thus improve the purity of the desired metals recovered. In addition, the moisture content is adjusted by either adding water or blending various wastes.

(b) High temperature processing. These materials are fed to the furnace where they are heated and the chemical reactions take place. The combination of residence time and turbulence helps ensure maximum volatilization of metal constituents.

(c) Product collecting. As discussed previously, the product collection system can consist of either a condenser or a combination condenser and baghouse. As noted earlier, the particular system depends on whether the metal is to be collected in the metallic form or as an oxide.

(d) Handling of residual. The equipment needed to handle the less volatile metal treated residual depends on the final disposition of the material. If further recovery is performed, then the waste would be treated in another furnace. If the material were to be land disposed, the final process step would generally consist of quenching.

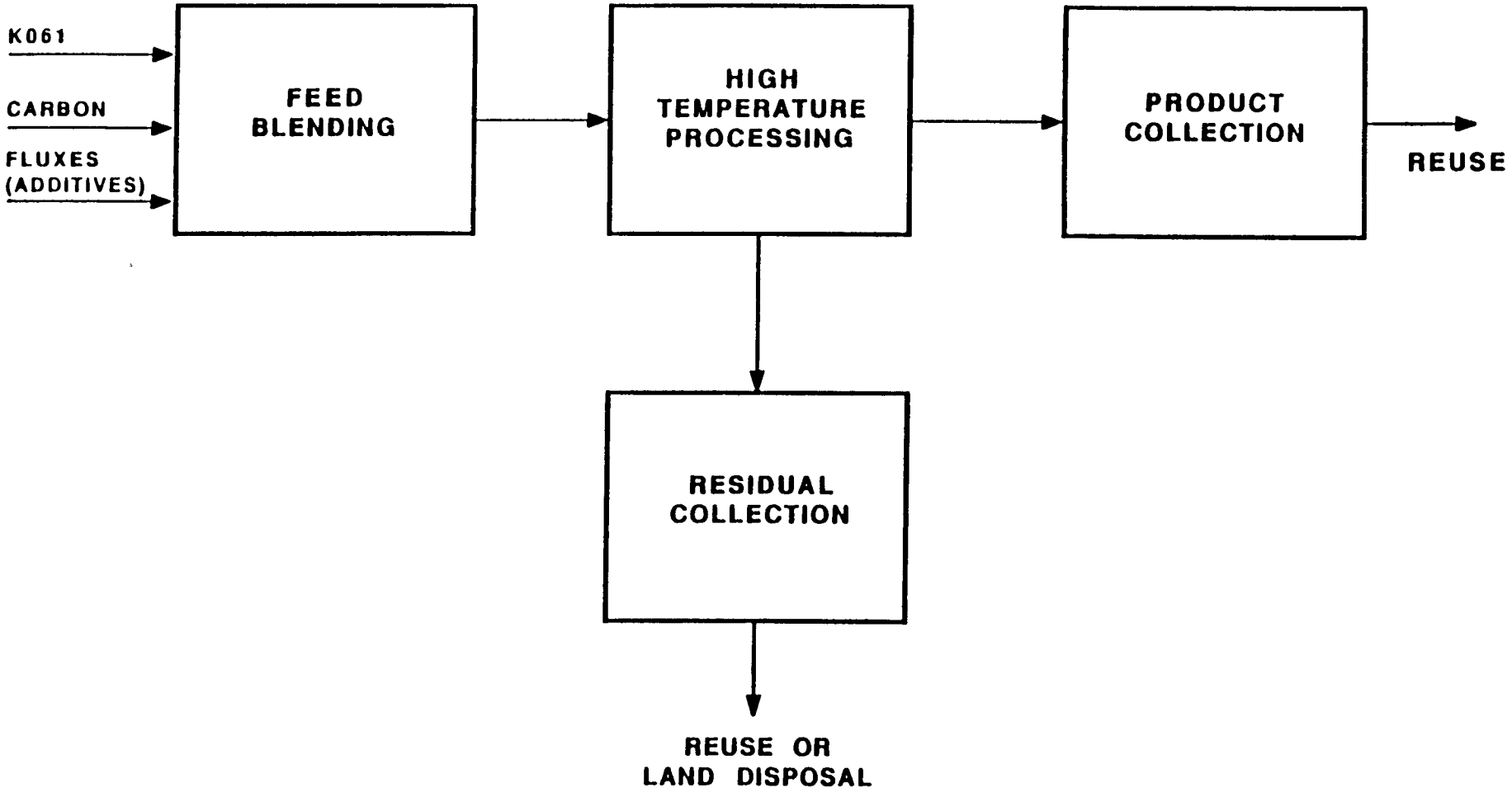

FIGURE 3-5 EXAMPLE HIGH TEMPERATURE METALS RECOVERY SYSTEM

(4) Waste characteristics affecting performance. In determining whether high temperature metals recovery technologies are likely to achieve the same level of performance on an untested waste as on a previously tested waste, EPA will examine the following three waste characteristics that have an impact on treatability: (1) type and concentrations of metals in the waste, (2) relative volatility of the metals, and (3) heat transfer characteristics of the waste.

(a) Type and concentrations of metals in the waste. Because this is a metals recovery process, the product must meet certain requirements for recovery. If the waste contains other volatile metals that are difficult to separate and whose presence may affect the ability to refine the product for subsequent reuse, high temperature metals recovery may provide less effective treatment. Analytical methods for metals can be found in SW-846.

(b) Boiling point. The relative volatilities of the metals in the waste also affect the ability to separate various metals. There is no conventional measurement technique for determining the relative volatility of a particular constituent in a given waste. EPA believes that the best measure of volatility of a specific metal constituent is the boiling point. EPA recognizes that the boiling point has certain shortcomings; in particular, boiling points are given for pure components, even though the other constituents in the waste will affect partial pressures and thus the boiling point of the mixture. EPA has not identified a parameter that can better assess relative volatility. Boiling points of metals can be determined from the literature.

(c) Heat transfer characteristics. The ability to heat constituents within a waste matrix is a function of the heat transfer characteristics of a heterogeneous waste material. The constituents being recovered from the waste must be heated near or above their boiling points in order for them to be volatilized and recovered. Whether sufficient heat will be transferred to the particular constituent to cause the metal to volatilize will depend on the heat transfer characteristics of the waste. There is no conventional direct measurement of the heat transfer characteristics of a waste. EPA believes that the best measure of the heat transfer characteristics of the waste is thermal conductivity. The analytical method that EPA has identified for measurement of thermal conductivity is named "Guarded, Comparative, Longitudinal Heat Flow Technique"; it is described in Appendix D.

(5) Design and operating parameters. The parameters that EPA will evaluate when determining whether a high temperature metals recovery system is well designed and well operated are (1) the furnace temperature, (2) the furnace residence time, (3) the amount and ratio of the feed blending materials, and (4) mixing. Below is an explanation of why EPA believes these parameters are important to an analysis of the design and operation of the system.

(a) Furnace temperature. In order for sufficient heat to be transferred to the waste for volatilization, high temperatures must be provided. The higher the temperature in the furnace, the more likely it

is that the constituents will react with carbon to form free metals and volatilize. The temperature must be approximately equal to or greater than the boiling point of the metals being volatilized. Excessive temperatures could volatilize unwanted metals into the product, possibly inhibiting the potential for reuse of the volatilized product. In assessing performance during the treatment period, EPA would want continuous temperature data.

(b) Furnace residence time. Furnaces must be designed to ensure that the waste has sufficient time to be heated to the boiling point of the metals to be volatilized. The time necessary for complete volatilization of these constituents is dependent on the furnace temperature and the heat transfer characteristics of the waste. The residence time is a function of the physical dimensions of the furnace (i.e., length, diameter, and slope (for rotary kilns)), the rate of rotation (if applicable), and the feed rate.

(c) Amount and ratio of feed blending materials. For the maximum volatilization of the metals being recovered, the following feed parameters must be controlled by the addition of carbon, fluxes, and other agents, if necessary. Blending of these feed components is also needed to adjust the following feed parameters to the required volume: carbon content, moisture content, calcium-to-silica ratio, and the initial concentration of the metals to be recovered. These parameters all affect the rate of the reduction reaction and volatilization. EPA will examine blending ratios during treatment to ensure that they comply with design conditions.

(d) Mixing. Effective mixing of the total components is necessary to ensure that a uniform waste is being treated. Turbulence in the furnace also ensures that no "pockets" of waste go untreated. Accordingly, EPA will examine the type and degree of mixing involved when assessing treatment design and performance.

3.2.5 Hexavalent Chromium Reduction

(1) Applicability and use of hexavalent chromium reduction. The process of hexavalent chromium (Cr^{6+}) reduction involves conversion from the hexavalent form to the trivalent form of chromium. This technology has wide application to hexavalent chromium wastes, including plating solutions, stainless steel acid baths and rinses, "chrome conversion" coating process rinses, and chromium pigment manufacturing wastes. Because this technology requires the pH to be in the acidic range, it would not be applicable to a waste that contains significant amounts of cyanide or sulfide. In such cases, lowering of the pH can generate toxic gases such as hydrogen cyanide or hydrogen sulfide. It is important to note that additional treatment is required to remove trivalent chromium from solution.

(2) Underlying principles of operation. The basic principle of treatment is to reduce the valence of chromium in solution (in the form of chromate or dichromate ions) from the valence state of six (+6) to the trivalent (+3) state. "Reducing agents" used to effect the reduction include sodium bisulfite, sodium metabisulfite, sulfur dioxide, sodium hydrosulfide, or the ferrous form of iron.

A typical reduction equation, using sodium sulfite as the reducing agent, is:

$$H_2Cr_2O_7 + 3Na_2SO_3 + (SO_4)_3 \rightarrow Cr_2(SO_4)_3 + 3Na_2SO_4 + 4H_2O.$$

The reaction is usually accomplished at pH values in the range of 2 to 3.

At the completion of the chromium reduction step, the trivalent chromium compounds are precipitated from solution by raising the pH to a value exceeding about 8. The less soluble trivalent chromium (in the form of chromium hydroxide) is then allowed to settle from solution. The precipitation reaction is as follows:

$$Cr_2(SO_4)_3 + 3Ca(OH)_2 \rightarrow 2Cr(OH)_3 + CaSO_4.$$

(3) Description of chromium reduction process. The chromium reduction treatment process can be operated in a batch or a continuous mode. A batch system will consist of a reaction tank, a mixer to homogenize the contents of the tank, a supply of reducing agent, and a source of acid and base for pH control.

A continuous chromium reduction treatment system, as shown in Figure 3-6, will usually include a holding tank upstream of the reaction tank for flow and concentration equalization. It will also include instrumentation to automatically control the amount of reducing agent added and the pH of the reaction tank. The amount of reducing agent is controlled by the use of a sensor called an oxidation-reduction potential (ORP) cell. The ORP sensor electronically measures, in millivolts, the level to which the redox reaction has proceeded at any given time. It

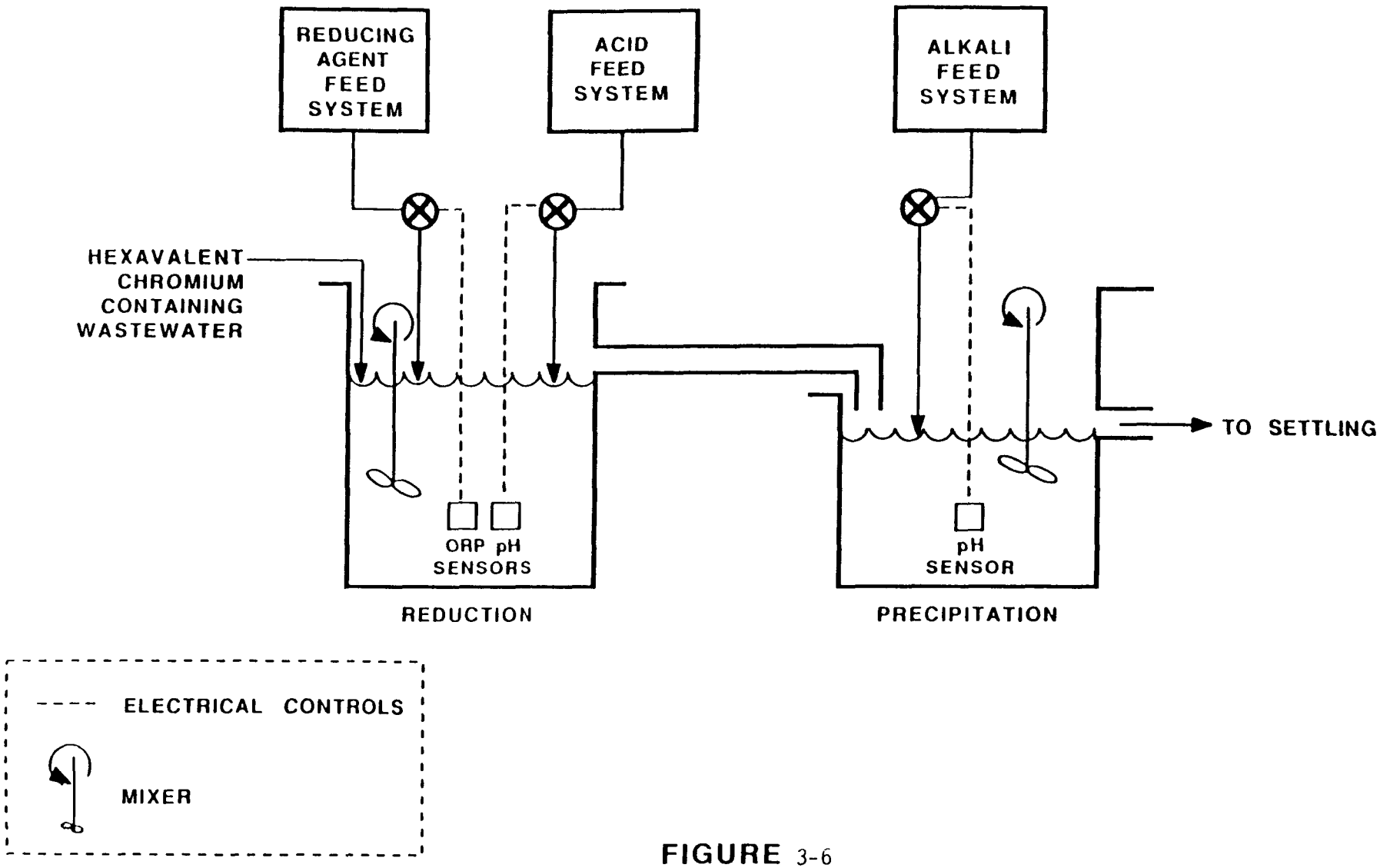

FIGURE 3-6
CONTINUOUS HEXAVALENT
CHROMIUM REDUCTION SYSTEM

must be noted, though, that the ORP reading is very pH dependent. Consequently, if the pH is not maintained at a steady value, the ORP will vary somewhat, regardless of the level of chromate reduction.

(4) Waste characteristics affecting performance. In determining whether chromium reduction can treat an untested waste to the same level of performance as a previously tested waste, EPA will examine waste characteristics that affect the reaction involved with either lowering the pH or reducing the hexavalent chromium. EPA believes that such characteristics include the oil and grease content of the waste, total dissolved solids, and the presence of other compounds that would undergo reduction reaction.

(a) Oil and grease. EPA believes that these compounds could potentially interfere with the oxidation-reduction reactions, as well as cause monitoring problems by fouling the instrumentation (e.g., electrodes). Oil and grease concentrations can be measured by EPA Methods 9070 and 9071.

(b) Total dissolved solids. These compounds can interfere with the addition of treatment chemicals into solution and can possibly cause monitoring problems.

(c) Other reducible compounds. These compounds would generally consist of other metals in the waste. Accordingly, EPA will evaluate the type and concentration of other metals in the waste when evaluating transfer of treatment performances.

(5) Design and operating parameters. The parameters that EPA will examine in assessing the design and operation of a chromium reduction treatment system are discussed below.

(a) Treated and untreated design concentration. EPA will need to know the level of performance that the facility is designed to achieve in order to ensure that the design is consistent with best demonstrated practices. This parameter is important because a system will not usually perform better than its design. Along with knowledge of the treated design concentration, it is also important to know the characteristics of the untreated waste that the system is designed to handle. Thus, EPA will obtain data on the untreated wastes to ensure that the waste characteristics fall within the design specifications.

(b) Reducing agent. The choice of a reducing agent establishes the chemical reaction upon which the chromium reduction system is based. The amount of reducing agent needs to be monitored and controlled in both batch and continuous systems. In batch systems, the reducing agent is usually controlled by an analysis of the hexavalent chromium remaining in solution. For continuous systems, the ORP reading is used to monitor and control the addition of the reducing agent.

The ORP reading will change slowly until the correct amount of reducing agent has been added, at which point the ORP will change rapidly, indicating the reaction has been completed. The set point for the ORP monitor is generally the reading just after the rapid change has begun. The reduction system must then be monitored periodically to determine whether the selected set point needs further adjustment.

(c) pH. For batch and continuous systems, pH is an important parameter because of its effect on the reduction reaction. For a batch system, pH can be monitored intermittently during treatment. For a continuous system, it should be monitored continuously because of its effect on the ORP reading. In evaluating the design and operation of a continuous chromium reduction system, it is important to know the pH on which the design ORP value is based, as well as the designed ORP value.

(d) Retention time. Retention time should be adequate to ensure that the hexavalent chromium reduction reaction goes to completion. In the case of the batch reactor, the retention time is varied by adjusting the treatment time in the reaction tank. If the process is continuous, it is important to monitor the feed rate to ensure that the designed residence time is achieved.

3.2.6 Chemical Precipitation

(1) Applicability and use of chemical precipitation. Chemical precipitation is used when dissolved metals are to be removed from solution. This technology can be applied to a wide range of wastewaters containing dissolved BDAT list metals and other metals as well. This treatment process has been practiced widely by industrial facilities since the 1940s.

(2) Underlying principles of operation. The underlying principle of chemical precipitation is that metals in wastewater are removed by the addition of a treatment chemical that converts the dissolved metal to a metal precipitate. This precipitate is less soluble than the original

metal compound and therefore settles out of solution, leaving a lower concentration of the metal present in the solution. The principal chemicals used to convert soluble metal compounds to the less soluble forms include: lime ($Ca(OH)_2$), caustic (NaOH), sodium sulfide (Na_2S), and, to a lesser extent, soda ash (Na_2CO_3), phosphate, and ferrous sulfide (FeS).

The solubility of a particular compound will depend on the extent to which the electrostatic forces holding the ions of the compound together can be overcome. The solubility will change significantly with temperature; most metal compounds are more soluble as the temperature increases. Additionally, the solubility will be affected by the other constituents present in a waste. As a general rule, nitrates, chlorides, and sulfates are more soluble than hydroxides, sulfides, carbonates, and phosphates.

An important concept related to treatment of the soluble metal compounds is pH. In general, pH provides a measure of the extent to which a solution contains either an excess of hydrogen or hydroxide ions. The pH scale ranges from 0 to 14; with 0 being the most acidic, 14 representing the highest alkalinity or hydroxide ion (OH^-) content, and 7.0 being neutral.

When hydroxide is used, as is often the case, to precipitate the soluble metal compounds, the pH is frequently monitored to ensure that sufficient treatment chemicals are added. It is important to point out that pH is not a good measure of the addition of treatment chemicals for

compounds other than hydroxides; when sulfide is used, for example, facilities might use an oxidation-reduction potential meter (ORP) correlation to ensure that sufficient treatment chemicals are used.

Following conversion of the relatively soluble metal compounds to metal precipitates, the effectiveness of chemical precipitation is a function of the physical removal, which usually relies on a settling process. A particle of a specific size, shape, and composition will settle at a specific velocity, as described by Stokes' Law. For a batch system, Stokes' Law is a good predictor of settling time because the pertinent particle parameters remain essentially constant. Nevertheless, in practice, settling time for a batch system is normally determined by empirical testing. For a continuous system, the theory of settling is complicated by factors such as turbulence, short-circuiting, and velocity gradients, thereby increasing the importance of the empirical tests.

(3) Description of the chemical precipitation process. The equipment and instrumentation required for chemical precipitation vary depending on whether the system is batch or continuous. Both operations are discussed below; a schematic of the continuous system is shown in Figure 3-7.

For a batch system, chemical precipitation requires only a feed system for the treatment chemicals and a second tank where the waste can be treated and allowed to settle. When lime is used, it is generally added to the reaction tank in a slurry form. In a batch system, the supernate is usually analyzed before discharge, thus minimizing the need for instrumentation.

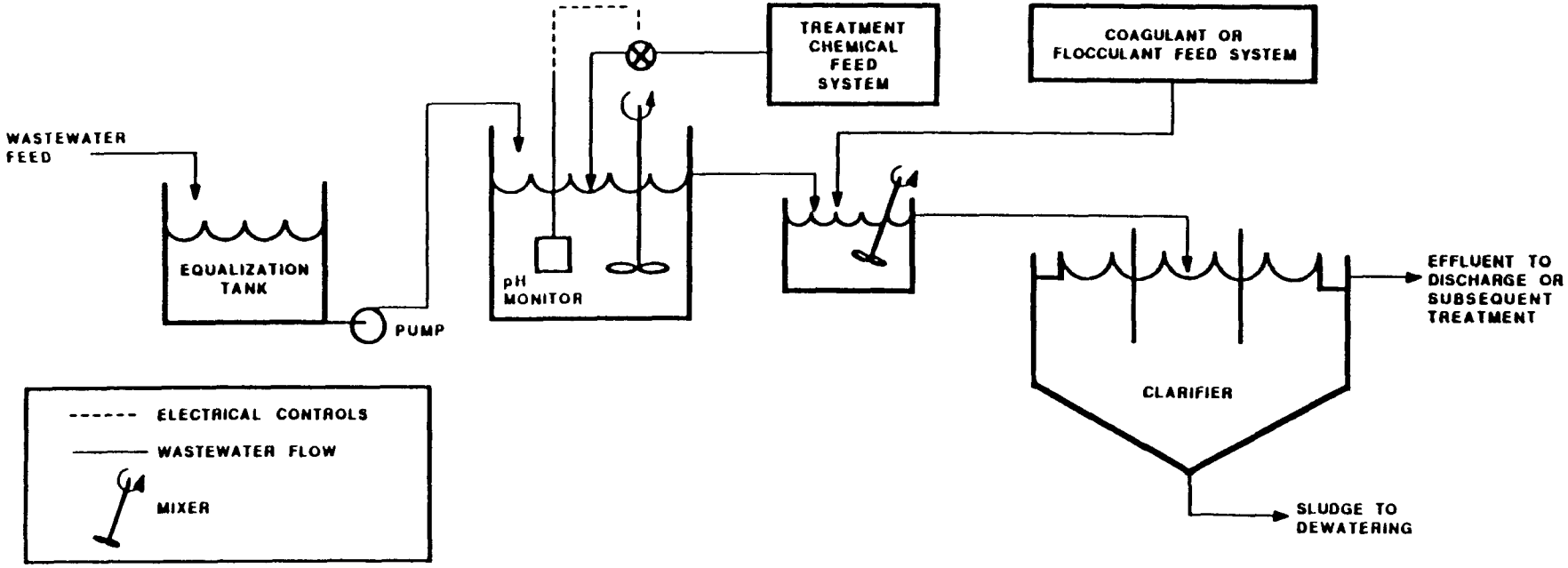

FIGURE 3-7 CONTINUOUS CHEMICAL PRECIPITATION

In a continuous system, additional tanks are necessary, as well as the instrumentation to ensure that the system is operating properly. In this system, the first tank that the wastewater enters is referred to as an equalization tank. This is where the waste is mixed in order to provide more uniformity, thereby minimizing the wide swings in the type and concentration of constituents being sent to the reaction tank. It is important to reduce the variability of the waste sent to the reaction tank because control systems inherently are limited with regard to the maximum fluctuations that can be managed.

Following equalization, the waste is pumped to a reaction tank where treatment chemicals are added; this is done automatically by using instrumentation that senses the pH of the system and then pneumatically adjusts the position of the treatment chemical feed valve such that the design pH value is achieved. Both the complexity and the effectiveness of the automatic control system will vary depending on the variation in the waste and the pH range that is needed to properly treat the waste.

An important aspect of the reaction tank design is that it be well mixed so that the waste and the treatment chemicals are dispersed throughout the tank, in order to ensure commingling of the reactant and the treatment chemicals. In addition, effective dispersion of the treatment chemicals throughout the tank is necessary to properly monitor and thereby control the amount of treatment chemicals added.

After the waste is reacted with the treatment chemical, it flows to a quiescent tank where the precipitate is allowed to settle and then be

subsequently removed. Settling can be chemically assisted through the use of flocculating compounds. Flocculants increase the particle size and the density of the precipitated solids, both of which increase the rate of settling. The flocculating agent that will best improve settling characteristics will vary depending on the particular waste; selection of the flocculating agent is generally accomplished by performing laboratory bench tests. Settling can be conducted in a large tank by relying solely on gravity or can be mechanically assisted through the use of a circular clarifier or an inclined separator. Schematics of two separators are shown in Figures 3-8 and 3-9.

Filtration can be used for further removal of precipitated residuals both in cases where the settling system is underdesigned and in cases where the particles are difficult to settle. Polishing filtration is discussed in a separate technology section.

(4) Waste characteristics affecting performance. In determining whether chemical precipitation is likely to achieve the same level of performance on an untested waste as on a previously tested waste, we will examine the following waste characteristics: (1) the concentration and type of the metal(s) in the waste, (2) the concentration of suspended solids (TSS), (3) the concentration of dissolved solids (TDS), (4) whether the metal exists in the wastewater as a complex, and (5) the oil and grease content. These parameters may affect the chemical reaction of the metal compound, the solubility of the metal precipitate, or the ability of the precipitated compound to settle.

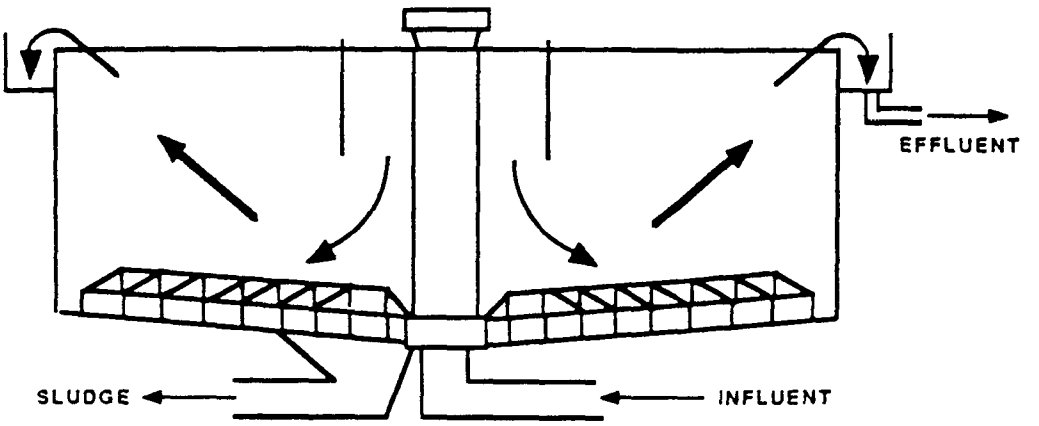

CENTER FEED CLARIFIER WITH SCRAPER SLUDGE REMOVAL SUSTEM

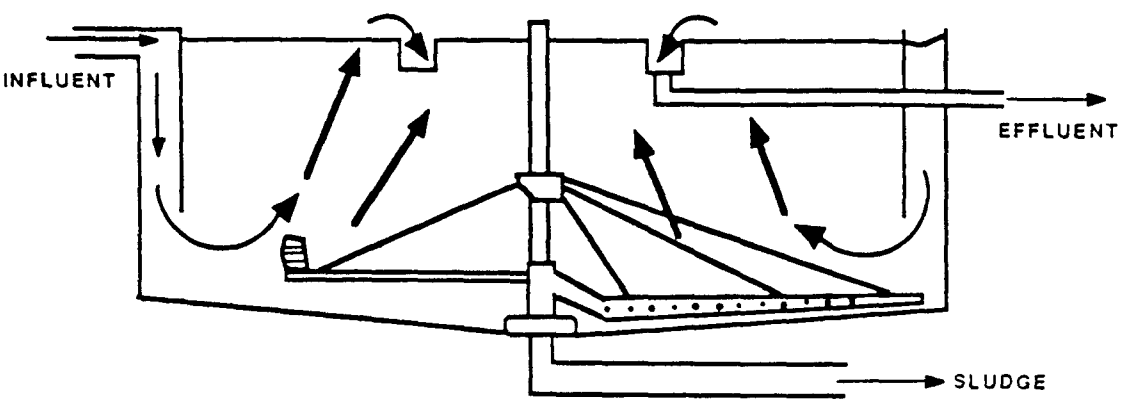

RIM FEED - CENTER TAKEOFF CLARIFIER WITH
HYDRAULIC SUCTION SLUDGE REMOVAL SYSTEM

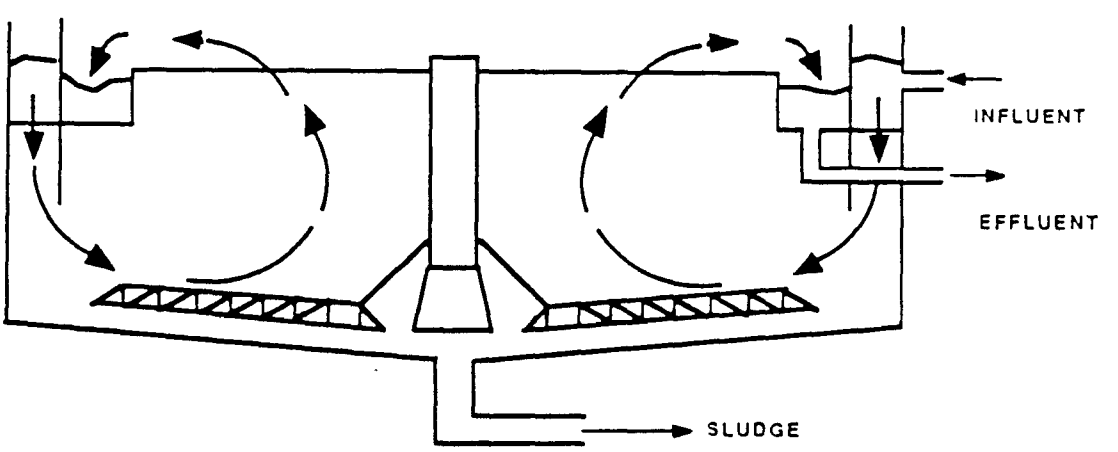

RIM FEED - RIM TAKEOFF CLARIFIER

FIGURE 3-8
CIRCULAR CLARIFIERS

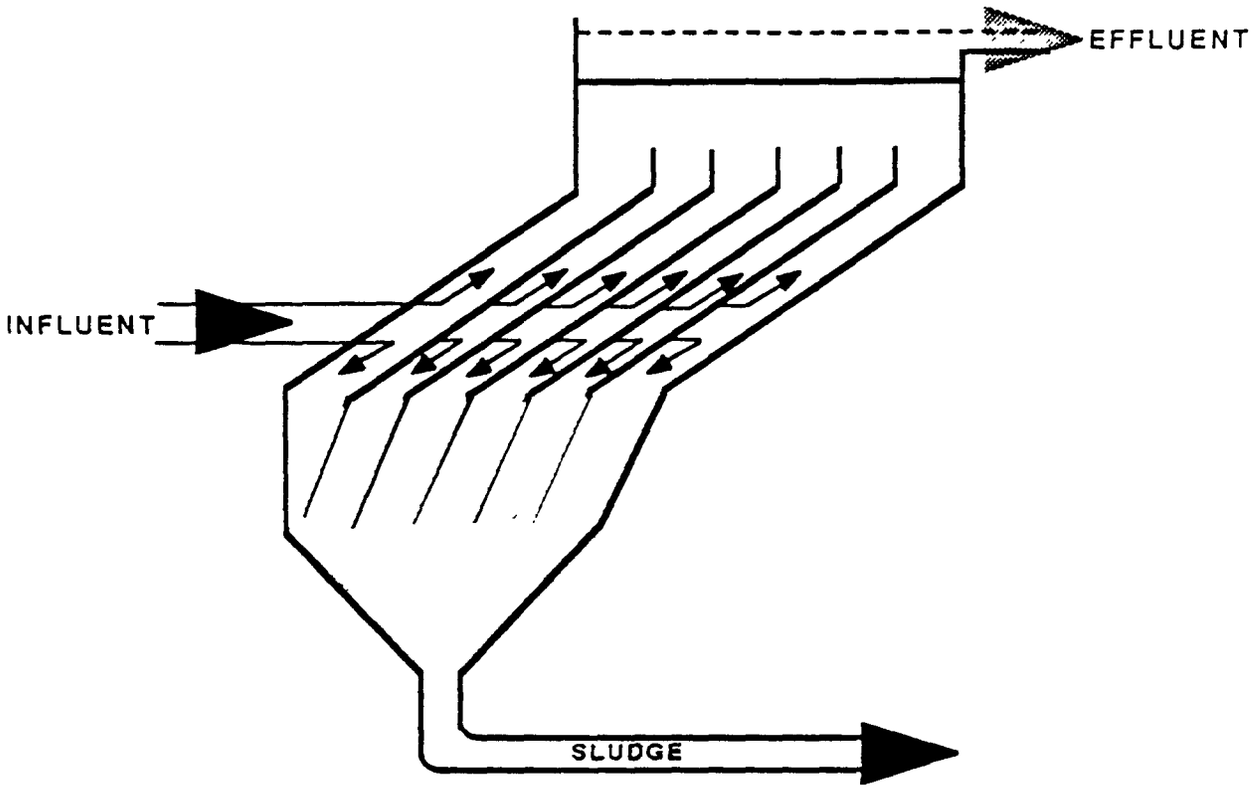

FIGURE 3-9
INCLINED PLATE SETTLER

(a) Concentration and type of metals. For most metals, there is a specific pH at which the metal hydroxide is least soluble. As a result, when a waste contains a mixture of many metals, it is not possible to operate a treatment system at a single pH that is optimal for the removal of all metals. The extent to which this situation affects treatment depends on the particular metals to be removed and their concentrations. One approach is to operate multiple precipitations, with intermediate settling, when the optimum pH occurs at markedly different levels for the metals present. The individual metals and their concentrations can be measured using EPA Method 6010.

(b) Concentration and type of total suspended solids (TSS). Certain suspended solid compounds are difficult to settle because of their particle size or shape. Accordingly, EPA will evaluate this characteristic in assessing the transfer of treatment performance. Total suspended solids can be measured by EPA Wastewater Test Method 160.2.

(c) Concentration of total dissolved solids (TDS). Available information shows that total dissolved solids can inhibit settling. The literature states that poor flocculation is a consequence of high TDS and shows that higher concentrations of total suspended solids are found in treated residuals. Poor flocculation can adversely affect the degree to which precipitated particles are removed. Total dissolved solids can be measured by EPA Wastewater Test Method 160.1.

(d) Complexed metals. Metal complexes consist of a metal ion surrounded by a group of other inorganic or organic ions or molecules

(often called ligands). In the complexed form, the metals have a greater solubility and therefore may not be as effectively removed from solution by chemical precipitation. EPA does not have an analytical method to determine the amount of complexed metals in the waste. The Agency believes that the best measure of complexed metals is to analyze for some common complexing compounds (or complexing agents) generally found in wastewater for which analytical methods are available. These complexing agents include ammonia, cyanide, and EDTA. The analytical method for cyanide is EPA Method 9010. The method for EDTA is ASTM Method D3113. Ammonia can be analyzed using EPA Wastewater Test Method 350.

(e) Oil and grease content. The oil and grease content of a particular waste directly inhibits the settling of the precipitate. Suspended oil droplets float in water and tend to suspend particles such as chemical precipitates that would otherwise settle out of the solution. Even with the use of coagulants or flocculants, the separation of the precipitate is less effective. Oil and grease content can be measured by EPA Method 9071.

(5) Design and operating parameters. The parameters that EPA will evaluate when determining whether a chemical precipitation system is well designed are: (1) design value for treated metal concentrations, as well as other characteristics of the waste used for design purposes (e.g., total suspended solids); (2) pH; (3) residence time; (4) choice of treatment chemical; (5) choice of coagulant/flocculant; and (6) mixing. The reasons why EPA believes these parameters are important to a design

analysis are cited below, along with an explanation of why other design criteria are not included in this analysis.

(a) Treated and untreated design concentrations. When determining whether to sample a particular facility, EPA pays close attention to the treated concentration the system is designed to achieve. Since the system will seldom outperform its design, EPA must evaluate whether the design is consistent with best demonstrated practice.

The untreated concentrations that the system is designed to treat are important in evaluating any treatment system. Operation of a chemical precipitation treatment system with untreated waste concentrations in excess of design values can easily result in poor performance.

(b) pH. The pH is important because it can indicate whether sufficient treatment chemical (e.g., lime) has been added in order to convert the metal constituents in the untreated waste to forms that will precipitate. The pH also affects the solubility of metal hydroxides and sulfides and thus directly impacts the effectiveness of removal. In practice, the design pH is determined by empirical bench testing, often referred to as "jar" testing. The temperature at which the "jar" testing is conducted is important since it also affects the solubility of the metal precipitates. Operation of a treatment system at temperatures above the design temperature can result in poor performance. In assessing the operation of a chemical precipitation system, EPA prefers to use continuous data on the pH and periodic temperature conditions throughout the treatment period.

(c) Residence time. Residence time is important because it impacts the completeness of the chemical reaction to form the metal precipitate and, to a greater extent, the amount of precipitate that settles out of solution. In practice, it is determined by "jar" testing. For continuous systems, EPA will monitor the feed rate to ensure that the system is operated at design conditions. For batch systems, EPA will want information on the design parameter used to determine sufficient settling time (e.g., total suspended solids).

(d) Choice of treatment chemical. A choice must be made as to what type of precipitating agent (i.e., treatment chemical) will be used. The factor that most affects this choice is the type of metal constituents to be treated. Other design parameters, such as pH, residence time, and choice of coagulant/flocculant agents, are based on the selection of the treatment chemical.

(e) Choice of coagulant/flocculant. This parameter is important because these compounds improve the settling rate of the precipitated metals and allow smaller systems (i.e., lower retention time) to achieve the same degree of settling as much larger systems. In practice, the choice of the best agent and the required amount is determined by "jar" testing.

(f) Mixing. The degree of mixing is a complex assessment that includes the energy supplied, the time the material is mixed, and the related turbulence effects of the specific size and shape of the tank. In its analysis, EPA will consider whether mixing is provided and whether

the type of mixing device used is one that could be expected to achieve uniform mixing. For example, EPA may not use data from a chemical precipitation treatment system in which an air hose was placed in a large tank to achieve mixing.

3.2.7 Polishing Filtration

Filtration is the removal of solids from wastes by a medium that permits the flow of the fluid but retains the particles. When filtration is conducted on wastewaters with low concentrations of solid particles (generally below 1,000 ppm), the term "polishing" filtration is applied; when conducted on wastes with higher concentrations of solids, the term "sludge" filtration is applied. This section discusses "polishing" filtration; sludge filtration is discussed separately.

(1) Applicability and use of polishing filtration. Polishing filtration is used to treat wastewaters containing relatively low concentrations of solids. Multimedia filtration, pressure or gravity sand filtration, and cartridge filtration are some of the types of equipment used for polishing filtration. This type of filtration is typically used as a polishing step for the supernatant after precipitation and settling (clarification) of wastewaters containing metal precipitates. In general, filtration is used to remove particles that are difficult to settle because of shape and/or density or to assist in removal of precipitated particles from an underdesigned settling device.

(2) Underlying principle of operation. The basic principle of filtration is the separation of particles from a mixture of fluids and particles by a medium that permits the flow of the fluid but retains the particles. As would be expected, larger particles are easier to separate from the fluid than are smaller particles.

Extremely small particles in the colloidal range may not be filtered effectively in a polishing filter and may appear in the treated wastewater. To mitigate this problem, the wastewater should be treated prior to filtration in order to modify the particle size distribution in favor of the larger particles, by the use of appropriate precipitants, coagulants, flocculants, and filter aids. The selection of the appropriate precipitant or coagulant is important because it affects the particles formed. For example, lime neutralization usually produces larger, less gelatinous particles than does caustic soda precipitation. For larger particles that become too small to filter effectively because of poor resistance to shearing, shear resistance can be improved by the use of coagulants and flocculants. Also, if pumps are used to feed the filter, shear can be minimized by designing for a lower pump speed, or by use of a pump with an impeller design that minimizes shearing.

Filter aids such as diatomaceous earth are used to precoat the cloth-type filter material and provide an initial filter cake onto which additional solids will be deposited during the filtration process. The presence of the precoat allows for removal of small particles from the solution being filtered. Smaller particles will mechanically adhere to the precoat solids during the filtration process.

(3) Description of polishing filtration system. For relatively low flows, a cartridge filter can be used. In this case a cylindrically shaped cartridge, such as a matted cloth, is placed within a sealed metal vessel. Wastewater is pumped through the cartridge until the flow drops excessively because the filter media are plugged. The sealed vessel is then opened and the plugged cartridge is removed and replaced with a new cartridge. The plugged cartridge is then disposed of.

For relatively large volume flows, granulated media (such as sand or anthracite coal) are used to trap suspended solids within the pore spaces of the media. Wastewater is filtered until excessive pressure is required to maintain the flow or until the flow drops to an unacceptable level. Granular media filters are cleaned by backwashing with filtered water that has been stored for that purpose. (Backwashing is always upflow to loosen the media granules and resuspend the entrapped solids.) The backwash water, which may be as much as 10 percent of the volume of the filtered wastewater, is then returned to the treatment system, so that the solids in the backwash water can be settled in the system clarifier.

(4) Waste characteristics affecting performance. To determine whether filtration would achieve a level of performance on an untested waste similar to that on a tested waste, EPA will examine the following waste characteristics: (1) size of suspended particles and (2) type of particles.

(a) Size of particles. Extremely small particles in the colloidal range may not be filtered effectively in a polishing filter and may appear in the filtrate. Accordingly, EPA would examine the particle size in assessing transfer of performance. Particle size can be determined using ASTM Method D422, Particle Size Distribution.

(b) Particle type. Some suspended solids are gelatinous in nature and are difficult to filter. When assessing transfer of performance, therefore, EPA will assess the type of suspended solids particles present. EPA is not aware of any specific quantitative method to measure the particle type; accordingly, such an assessment will be based on a qualitative engineering analysis of the suspended solids particles.

(5) Design and operating parameters. The design and operating parameters that EPA will evaluate in assessing the performance of polishing filtration are: (1) treated and untreated design concentrations, (2) type of filter, (3) pore size, (4) waste feed pressure, and (5) use and type of filter aids. Each of these parameters is discussed below.

(a) Treated and untreated design concentrations. As with other technologies, it is important to know the level of performance that the particular unit was designed to achieve in order to ensure that the design value represents best demonstrated practice. Additionally, EPA would want to evaluate feed characteristics to the filter during treatment to ensure that the unit was operated within design

specifications. Operation of the filter in excess of feed conditions could easily lead to poor performance.

(b) Type of filter. There are several different types of polishing filters, including granular media, cartridge filters, and pressure filters such as plate and frame. Factors that affect filter selection include the concentration of suspended solids, particle type and size, process conditions (including flow rate and pressure), and whether the treatment system is operated on a batch or a continuous process. While more than one type of filter will generally work, it is important to know which filter is used, as well as the basis for selecting that filter.

(c) Pore size. The pore size determines the particle size that will be effectively removed; accordingly, it is an important factor in assessing filtration effectiveness on a particular waste. EPA will need to know the pore size used as well as the basis for its selection.

(d) Pressure drop across the filter. An important filter design specification is the pressure drop across the filter. A pressure drop that is higher than the filter design can force solid particles through the filter and thus reduce the filter's effectiveness. During treatment, EPA will periodically examine pressure readings in order to ensure that the filter is being operated within design specifications.

(e) Use and type of filter aids. As previously discussed, filter aids improve the effectiveness of filtering gelatinous particles and increase the time that the filter can stay on line. In assessing

filtration performance, it is important to know both the type of filter aid used and the basis for selection.

3.2.8 Sludge Filtration

(1) Applicability and use of sludge filtration. Sludge filtration, also known as sludge dewatering or cake formation filtration, is a technology used on wastes that contain high concentrations of suspended solids generally higher than 1 percent. The remainder of the waste is essentially water. Sludge filtration is applied to sludges, typically those that have settled to the bottom of clarifiers, for dewatering. After filtration, these sludges can be dewatered to 20 to 50 percent solids.

(2) Underlying principle of operation. The basic principle of filtration is the separation of particles from a mixture of fluids and particles by a medium that permits the flow of the fluid but retains the particles. As would be expected, larger particles are easier to separate from the fluid than are smaller particles. Extremely small particles in the colloidal range may not be filtered effectively and may appear in the treated waste. To mitigate this problem, the wastewater should be treated prior to filtration to modify the particle size distribution in favor of the larger particles, by the use of appropriate precipitants, coagulants, flocculants, and filter aids. The selection of the appropriate precipitant or coagulant is important because it affects the particles formed. For example, lime neutralization usually produces larger, less gelatinous particles than does caustic soda precipitation.

For larger particles that become too small to filter effectively because of poor resistance to shearing, shear resistance can be improved by the use of coagulants and flocculants. Also, if pumps are used to feed the filter, shear can be minimized by designing for a lower pump speed or by use of a low shear type of pump.

(3) Description of the sludge filtration process. For sludge filtration, settled sludge is either pumped through a cloth-type filter medium (such as in a plate and frame filter that allows solid "cake" to build up on the medium) or the sludge is drawn by vacuum through the cloth medium (such as on a drum or vacuum filter, which also allows the solids to build). In both cases the solids themselves act as a filter for subsequent solids removal. For a plate and frame type filter, removal of the solids is accomplished by taking the unit off line, opening the filter, and scraping the solids off. For the vacuum type filter, the cake is removed continuously. For a specific sludge, the plate and frame type filter will usually produce a drier cake than will a vacuum filter. Other types of sludge filters, such as belt filters, are also used for effective sludge dewatering.

(4) Waste characteristics affecting performance. The following characteristics of the waste will affect the performance of a sludge filtration unit: (1) size of particles and (2) type of particles.

(a) Size of particles. The smaller the particle size, the more the particles tend to go through the filter media. This is especially true for a vacuum filter. For a pressure filter (like a plate and

frame), smaller particles may require higher pressures for equivalent throughput, since the smaller pore spaces between particles create resistance to flow.

(b) Type of particles. Some solids formed during metal precipitation are gelatinous in nature and cannot be dewatered well by cake formation filtration. In fact, for vacuum filtration a cake may not form at all. In most cases, solids can be made less gelatinous by use of the appropriate coagulants and coagulant dosage prior to clarification, or after clarification but prior to filtration. In addition, the use of lime instead of caustic soda in metal precipitation will reduce the formation of gelatinous solids. Also, the addition of filter aids to a gelatinous sludge, such as lime or diatomaceous earth, will help significantly. Finally, precoating the filter with diatomaceous earth prior to sludge filtration will assist in dewatering gelatinous sludges.

(5) Design and operating parameters. For sludge filtration, the following design and operating variables affect performance: (1) type of filter selected, (2) size of filter selected, (3) feed pressure, and (4) use of coagulants or filter aids.

(a) Type of filter. Typically, pressure type filters (such as a plate and frame) will yield a drier cake than will a vacuum type filter; they will also be more tolerant of variations in influent sludge characteristics. Pressure type filters, however, are batch operations, so that when the cake is built up to the maximum depth physically possible (constrained by filter geometry), or to the maximum design

pressure, the filter is turned off while the cake is removed. A vacuum filter is a continuous device (i.e., cake discharges continuously), but will usually be much larger than a pressure filter with the same capacity. A hybrid device is a belt filter, which mechanically squeezes sludge between two continuous fabric belts.

(b) Size of filter. As with in-depth filters, the larger the filter, the greater its hydraulic capacity and the longer the filter runs between cake discharge.

(c) Feed pressure. This parameter impacts both the design pore size of the filter and the design flow rate. In treating waste it is important that the design feed pressure not be exceeded; otherwise, particles may be forced through the filter medium, resulting in ineffective treatment.

(d) Use of coagulants. Coagulants and filter aids may be mixed with filter feed prior to filtration. Their effect is particularly significant for vacuum filtration since in this instance they may make the difference between no cake and a relatively dry cake. In a pressure filter, coagulants and filter aids will also significantly improve hydraulic capacity and cake dryness. Filter aids, such as diatomaceous earth, can be precoated on filters (vacuum or pressure) for sludges that are particularly difficult to filter. The precoat layer acts somewhat like an in-depth filter, in that sludge solids are trapped in the precoat pore spaces. Use of precoats and most coagulants or filter aids significantly increases the amount of sludge solids to be disposed of.

However, polyelectrolyte coagulant usage usually does not increase sludge volume significantly because the dosage is low.

3.3 Performance Data Base

3.3.1 Organics Treatment Data

The Agency does not have performance data for treatment of the organics present in K086 solvent wash using batch distillation, fractional distillation, or fuel substitution. To help develop organic treatment standards, EPA tested incineration to demonstrate the actual performance achievable by this technology for treatment of K086 solvent wash. Since EPA is not aware of any generator or TSD facilities currently using incineration for treatment of wastes containing high percentages of K086 solvent wash, the K086 solvent wash was collected from a generator and incinerated at EPA's test facility. The rationale for selecting the generator chosen for waste collection is presented in a memorandum dated March 21, 1988, located in the Administrative Record for K086 solvent wash.

EPA has six untreated and treated data sets for K086 solvent wash using incineration. These data are shown in Table 3-1. Although a rotary kiln incinerator was used to treat the K086 solvent wash, the data effectively represent liquid injection because the waste was fed through the liquid injection nozzle on the rotary kiln unit. Each of the six data sets provides performance for the nine BDAT list organics detected in the untreated K086 solvent wash; therefore, the total number of treated data points is 54. The treated data represent total waste

Table 3-1 Incineration
EPA Collected Data
K086 Solvent Wash

Analytical Data	BDAT Organic Constituent Concentrations											
	Sample Set #1		Sample Set #2		Sample Set #3		Sample Set #4		Sample Set #5		Sample Set #6	
BDAT List Constituents	K086 solvent wash (mg/kg)	Scrubber water (mg/l)	K086 solvent wash (mg/kg)	Scrubber water (mg/l)	K086 solvent wash (mg/kg)	Scrubber water (mg/l)	K086 solvent wash (mg/kg)	Scrubber water (mg/l)	K086 solvent wash (mg/kg)	Scrubber water (mg/l)	K086 solvent wash (mg/kg)	Scrubber water (mg/l)
Volatile Organics												
Acetone	CBI	<0 005	CBI	<0 005	CBI	<0.005	CBI	<0 005	CBI	<0 005	CBI	<0.005
Ethylbenzene	CBI	<0 005	CBI	<0 005	CBI	<0.005	CBI	<0 005	CBI	<0 005	CBI	<0.005
Methyl isobutyl ketone	CBI	<0 010	CBI	<0 010	CBI	<0 010	CBI	<0.010	CBI	<0 010	CBI	<0.010
Methylene chloride	CBI	<0 010	CBI	<0 005	CBI	<0.005	CBI	<0 005	CBI	<0 005	CBI	<0.005
Toluene	CBI	<0 010	CBI	<0 005	CBI	<0.005	CBI	<0 005	CBI	<0 005	CBI	<0 005
Xylene (total)	CBI	<0 005	CBI	<0 005	CBI	<0.005	CBI	<0 005	CBI	<0 005	CBI	<0 005
Semivolatile Organics												
bis(2-ethylhexyl)phthalate	CBI	<0 010	CBI	<0 010	CBI	<0 010	CBI	<0 010	CBI	<0 010	CBI	<0.010
Cyclohexanone	CBI	<0 005	CBI	<0 005	CBI	<0.005	CBI	<0 005	CBI	<0 005	CBI	<0 005
Naphthalene	CBI	<0 010	CBI	<0 010	CBI	<0 010	CBI	<0 010	CBI	<0 010	CBI	<0 010

Design and Operating Data

Kiln	Design Value	Sample Set #1	Sample Set #2	Sample Set #3	Sample Set #4	Sample Set #5	Sample Set #6
Temperature	1800°F	1912-1919°F	1898-1929°F	1943-2053°F	1892-1951°F	1945-1954°F	1830-1970°F
Revolutions per minute	0 2 rpm	0 2 rpm	0 2 rpm	0 2 rpm	0 2 rpm	0 2 rpm	0 2 rpm
Afterburner							
Temperature	2200°F	2039 2051 F	2032-2051°F	2044-2053°F	2034-2044°F	2037-2049°F	2041-2056°F
Excess oxygen	6-8%	5 0-6 0%	5 5%	5 5-6 2%	5 5-6 0%	5 7-6 0%	5 0-5.7%
Carbon monoxide	<1000 ppm	4 0-5 0 ppm	4 0 ppm	4 0 ppm	4 0 ppm	3 7-4 0 ppm	4 0 ppm

CBI = Confidential Business Information
Reference USEPA 1987a

concentration found in the scrubber water. EPA's analyses of these data for the development of organic treatment standards for K086 solvent wash can be found in Sections 4 and 6.

3.3.2 Metals Treatment Data

(1) Wastewater. The Agency does not have performance data on treatment of the BDAT metals in the scrubber water generated specifically from the incineration of K086 solvent wash. However, EPA does have data from EPA's testing of Envirite Corporation that the Agency believes represent a level of treatment performance that can be achieved for the K086 solvent wash scrubber water by using chromium reduction, followed by lime precipitation and vacuum sludge filtration.

EPA believes that the Envirite treatment process could be used to treat K086 scrubber water because the treatment system consists of chromium reduction followed by lime precipitation and vacuum sludge filtration.

The data collected for the Envirite treatment system consist of 11 untreated and treated sample sets. The untreated waste is a metal-containing wastewater that is a mixture of F006, D002, D003, and K062 wastewaters. The two treated streams are the filtrate and the filter cake generated from vacuum dewatering. The performance data for the Envirite wastewater treatment system are shown in Table 3-2.

EPA reviewed the characterization data for K086 scrubber water, also presented in Table 3-2, as well as data on parameters that would affect the performance of the Envirite treatment system (i.e., sulfide

concentration, oil and grease content, total solids content, complex metal concentration, and type and concentration of metals). The only data available for evaluation were type and concentration of metals and oil and grease content (using total organic carbon as an indicator).

The concentrations of untreated metals in the Envirite wastewater are greater than the metal concentrations in the K086 solvent wash scrubber water. Specifically, the principal metals in the K086 scrubber water are present at concentrations less than 0.193 mg/l for chromium and 1.52 mg/l for lead. In the Envirite metal-containing wastewater, the concentrations for chromium range from 395 to 2,581 mg/l and the concentrations for lead range from 10 to 212 mg/l. Both the Envirite wastewater and the K086 scrubber water have low oil and grease contents (i.e., less than 0.3 percent total organic carbon). In conclusion, these data show that the K086 scrubber water could be treated to the same levels as the Envirite metal-containing wastewaters.

(2) Nonwastewater. The Agency does not have performance data on treatment of the BDAT metals in the precipitate from treatment of K086 scrubber water. However, EPA does have data from EPA's testing of Envirite Corporation that the Agency believes represent a level of treatment performance that can be achieved for the K086 precipitate by using lime stabilization followed by sludge filtration.

The Envirite treatment process incorporates the lime precipitation process with lime stabilization before sludge dewatering to reduce the leachability of the metals in the precipitate.

Since the Agency has established that the Envirite wastewaters are similar to K086 scrubber waters, it is reasonable to expect that the Envirite filtered precipitate (i.e., filter cake) is similar to the K086 filtered precipitate.

Table 3-2 Chromium Reduction Chemical Precipitation, Followed by Vacuum Filtration EPA Collected Data from Envirite

Constituent	K086 solvent wash scrubber water (mg/l)	Sample Set #1 Untreated Envirite wastewater (mg/l)	Filtrate (mg/l)	Filter cake Total (mg/kg)	TCLP (mg/l)
BDAT Metals					
Antimony	0 063-0 107	<10	<1	<10	-
Arsenic	0 059-0 093	<1	<0 1	<1	<0 010
Barium	0 226-0 287	<10	<1	25	0 23
Beryllium	<0 001	<2	<0 2	<2	-
Cadmium	<0 004	13	<0 5	20	<0 020
Chromium (hexavalent)	<0 010-0 014	893	0 011	1 43	-
Chromium (total)	0 099-0 193	2581	0 12	7300	<0 050
Copper	0 115-0 150	138	0 21	380	-
Lead	0 827-1 52	64	<0 01	2600	<0 10
Mercury	<0 0002	<1	<0 1	<1	<0 0002
Nickel	<0 011	471	0 33	1400	
Selenium	<0 005	<10	<1	<10	<0 010
Silver	<0 006-0 007	<2	<0.2	<2	<0 020
Thallium	0 022-0 027	<10	<1	<10	-
Zinc	0 180-0 216	116	0 125	1300	
Other Parameters					
Total organic carbon	1 97-6 38	2700			
Total solids	3580 4160	-			
Total chlorides	1 2-101	-			
Total organic halides	0 015-0 072	2500			
Cyanide	0 010	-			
Sulfide	[illegible]				

Chemical Operating Parameters

Hexavalent Chromium	
pH	8 5-9 0
Reducing agent	ferrous iron
Ratio of reducing agent to hexavalent chromium	3 2-1 0
Chemical Precipitation	
pH	8-10
Precipitating agents	lime
Filtration	
Type of filter	vacuum filter

1 Color interference
- = Not analyzed

Reference USEPA 1986a

Table 3-2 (continued)

Constituent	K086 solvent wash scrubber water (mg/l)	Sample Set #2: Untreated Envirite wastewater (mg/l)	Sample Set #2: Filtrate (mg/l)	Sample Set #2: Filter cake Total (mg/kg)	Sample Set #2: Filter cake TCLP (mg/l)
BDAT Metals					
Antimony	0.083-0.107	<10	<1	<10	-
Arsenic	0.059-0.093	<1	<0.1	1	<0.010
Barium	0.220-0.287	10	<1	38	0.28
Beryllium	<0.001	<2	<0.2	<2	-
Cadmium	<0.004	10	<0.5	28	<0.020
Chromium (hexavalent)	<0.010-0.014	507	0.190	1.04	-
Chromium (total)	0.099-0.193	2279	0.12	7400	<0.050
Copper	0.115-0.130	133	0.15	400	-
Lead	0.827-1.52	54	0.01	1200	<0.10
Mercury	<0.0002	<1	<0.1	<1	<0.0002
Nickel	<0.011	470	0.33	1200	
Selenium	<0.005	<10	<1	<10	<0.010
Silver	<0.006-0.007	2	<0.2	<2	<0.020
Thallium	0.022-0.027	<10	<1	<10	-
Zinc	0.180-0.216	4	0.125	2100	-
Other Parameters					
Total organic carbon	1.97-8.36	2800			
Total solids	3580-4160	-			
Total chlorides	1.2-101	-			
Total organic halides	0.015-0.072	3600			
Cyanide	<0.010	-			
Sulfide	<0.5	-			

Design and Operating Parameters

Hexavalent Chromium	
pH	[illegible]
Reducing agent	ferrous iron
Ratio of reducing agent to hexavalent chromium	3.2-1.0
Chemical Precipitation	
pH	8-10
Precipitating agents	lime
Filtration	
Type of filter	vacuum filter

I = Color interference
= Not analyzed

Reference: USEPA 1986a

Table 3-2 (continued)

Constituent	K086 solvent wash scrubber water (mg/l)	Sample Set #3 Untreated Envirite wastewater (mg/l)	Filtrate (mg/l)	Filter cake Total (mg/kg)	TCLP (mg/l)
BDAT Metals					
Antimony	0 083-0 107	<10	<1	<10	-
Arsenic	0 059-0 093	<1	<0 1	2	<0 012
Barium	0 226-0 287	<10	3 5	<10	0 45
Beryllium	<0 001	<2	<0 2	<2	-
Cadmium	<0 004	<5	<0 5	<5	<0 020
Chromium (hexavalent)	<0.010-0 014	775	I	I	-
Chromium (total)	0 099-0 193	1990	0 20	4000	<0 050
Copper	0 115-0 150	153	0 21	445	-
Lead	0 827-1 52	<10	<0 01	118	<0 10
Mercury	<0 0002	<1	<0 1	<1	<0 0002
Nickel	<0 011	16350	0 35	3900	-
Selenium	0 005	<10	1	<10	<0 020
Silver	<0 006-0 007	<2	<0 3	<2	<0 020
Thallium	0 022-0 027	<10	<1	<10	-
Zinc	0 180-0 216	3 9	0 140	112	-
Other Parameters					
Total organic carbon	1 37-8 36	500			
Total solids	3580-4160	-			
Total chlorides	1 2-101	-			
Total organic halides	0 015-0 072	0			
Cyanide	<0 010	-			
Sulfide	<0 5	-			

Demonstrated Treatment Parameters

Hexavalent Chromium

pH	[illegible]
Reducing agent	ferrous iron
Ratio of reducing agent to hexavalent chromium	5 2-1 0

Chemical Precipitation

pH	8-10
Precipitating agents	lime

Filtration

Type of filter	vacuum filter

I = Color interference
- Not analyzed

Reference USEPA 1986a

Table 3-2 (continued)

Constituent	K086 solvent wash scrubber water (mg/l)	Sample Set #4: Untreated Envirite wastewater (mg/l)	Filtrate (mg/l)	Filter cake: Total (mg/kg)	TCLP (mg/l)
BDAT Metals					
Antimony	0 083-0 107	<10	-	<10	-
Arsenic	0 059-0 093	<1	<1	2	<0 015
Barium	0 226-0 287	<10	<10	<10	<0 10
Beryllium	<0 001	<2	<2	<2	-
Cadmium	<0 004	<5	<5	<5	<0 020
Chromium (hexavalent)	<0 010-0 014	0 6	0 042	0 92	-
Chromium (total)	0 093-0 193	556	0 10	2400	0.068
Copper	0 115-0 130	88	0 07	292	-
Lead	0 827-1 52	<10	<0 01	99	<0 10
Mercury	<0 0002	<1	<1	<1	<0 0002
Nickel	<0.011	6610	0 33	2700	-
Selenium	<0 005	<10	<10	<10	<0 020
Silver	<0 006-0 007	<2	<2	<2	<0 020
Thallium	0.022-0.027	<10	<10	<10	-
Zinc	0 180-0 216	84	1 62	1200	-
Other Parameters					
Total organic carbon	1 97-8 30	2900			
Total solids	3580-4160	-			
Total chlorides	1 2-101	-			
Total organic halides	0 015-0 072	300			
Cyanide	<0 010	-			
Sulfide	<0 5	-			

Design and Operating Parameters

Hexavalent Chromium

pH	2 0-3 0
Reducing agent	ferrous iron
Ratio of reducing agent to hexavalent chromium	3 2-1 0

Chemical Precipitation

pH	8-10
Precipitating agents	lime

Filtration

Type of filter	vacuum filter

* = Color interference
NA = Not analyzed

Reference USEPA 1986a

Table 3-2 (continued)

Constituent	K086 solvent wash scrubber water (mg/l)	Sample Set #5 Untreated Envirite wastewater (mg/l)	Filtrate (mg/l)	Filter cake Total (mg/kg)	TCLP (mg/l)
EDAT Metals					
Antimony	0 083 0 107	<10	<1	<10	-
Arsenic	0 059-0 093	<1	<0 1	1	<0 010
Barium	0 226-0 287	<10	<1	<10	<0 75
Beryllium	<0 001	<2	<0 2	<2	-
Cadmium	<0 004	<5	<0 5	<5	<0 020
Chromium (hexavalent)	<0.010-0 014	917	0 058	0 741	-
Chromium (total)	0 099-0 193	2236	0 11	11500	<0 050
Copper	0 115-0 130	91	0 14	375	-
Lead	0 827-1 52	18	<0 01	525	<0 10
Mercury	<0 0002	1	<0 1	<1	<0 0002
Nickel	<0 011	1414	0 310	3300	-
Selenium	<0 005	<10	<1	<10	<0 010
Silver	<0 006-0 007	<2	<0 2	<2	<0 020
Thallium	0 022-0 027	<10	<1	<10	-
Zinc	0 180-0 216	71	0 125	410	-
Other Parameters					
Total organic carbon	1 97-8 30	200			
Total solids	3580-4160	-			
Total chlorides	1 2-101	-			
Total organic halides	0 015-0 072	0			
Cyanide	<0 010	-			
Sulfide	<0 5	-			

Design and Operating Parameters

Hexavalent Chromium

pH	3 5-4 0
Reducing agent	ferrous iron
Ratio of reducing agent to hexavalent chromium	2-1 0

Chemical Precipitation

pH	8-10
Precipitating agents	lime

Filtration

Type of filter	vacuum filter

[illegible] interference
[illegible] analyzed

Reference USEPA 1986a

Table 3-2 (continued)

Constituent	K086 solvent wash scrubber water (mg/l)	Sample Set #6 Untreated Envirite wastewater (mg/l)	Filtrate (mg/l)	Filter cake Total (mg/kg)	TCLP (mg/l)
BDAT Metals					
Antimony	0.085-0.107	<10	<1	<10	-
Arsenic	0.059-0.093	<1	<0.1	1	<0.010
Barium	0.226-0.287	<10	<2	<10	<0.10
Beryllium	<0.001	<2	<0.2	<2	-
Cadmium	<0.004	<5	<0.5	<5	<0.020
Chromium (hexavalent)	<0.010-0.014	734	I	1.78	-
Chromium (total)	0.099-0.193	2548	0.10	10000	<0.050
Copper	0.115-0.130	149	0.12	432	-
Lead	0.827-1.52	<10	<0.01	42	<0.10
Mercury	<0.0002	<1	<0.1	<1	<0.0002
Nickel	<0.011	588	0.33	1600	-
Selenium	<0.005	10	<1	<10	<0.010
Silver	<0.006-0.007	<2	<0.2	<2	<0.020
Thallium	0.022-0.027	<10	<1	<10	-
Zinc	0.180-0.216	4	0.095	68	-
Other Parameters					
Total organic carbon	1.97-8.36	700			
Total solids	3560-4160	-			
Total chlorides	1.2-101	-			
Total organic halides	0.015-0.072	700			
Cyanide	<0.010	-			
Sulfide	<3.5	-			

Design and Operating Parameters

Hexavalent Chromium	
pH	8.5-9.0
Reducing agent	ferrous iron
Ratio of reducing agent to hexavalent chromium	3.2-1.0
Chemical Precipitation	
pH	8-10
Precipitating agents	lime
Filtration	
Type of filter	vacuum filter

I - Color interference
- Not analyzed

Reference USEPA 1986a

Table 3-2 (continued)

Constituent	K086 solvent wash scrubber water (mg/l)	Sample Set #7 Untreated Envirite wastewater (mg/l)	Filtrate (mg/l)	Filter cake Total (mg/kg)	TCLP (mg/l)
BDAT Metals					
Antimony	0 083-0 107	<10	<1	<10	-
Arsenic	0 059-0 093	<1	<0 1	1	<0 010
Barium	0 226-0 287	<10	<1	30	0 18
Beryllium	<0.001	<2	<0.2	<2	-
Cadmium	<0 004	10	<0 5	20	<0 020
Chromium (hexavalent)	<0 010-0 014	769	0 121	-	-
Chromium (total)	0 099-0 193	2514	0 12	16300	<0 050
Copper	0 115-0 130	72	0 16	330	-
Lead	0 827-1 52	108	<0 01	375	<0 10
Mercury	<0 0002	<1	<0 01	<1	<0 0002
Nickel	<0 011	426	0 40	1700	-
Selenium	<0 005	<10	<1	<10	<0 010
Silver	<0 006-0.007	<2	<0.2	<2	<0 020
Thallium	0 022-0.027	<10	<1	<10	-
Zinc	0 180-0.216	171	0.115	375	-
Other Parameters					
Total organic carbon	1 47-8 36	5400			
Total solids	3580-4160	-			
Total chlorides	1 2-101	-			
Total organic halides	0 015-0 072	1900			
Cyanide	<0 010	-			
Sulfide	<0 5				

Design and Operating Parameters

Hexavalent Chromium	
pH	3 5-9 0
Reducing agent	ferrous iron
Ratio of reducing agent to hexavalent chromium	3 2-1 0
Chemical Precipitation	
pH	8-10
Precipitating agents	lime
Filtration	
Type of filter	vacuum filter

I - Color interference
- - Not analyzed

Reference USEPA 1986a

Table 3-2 (continued)

Constituent	K086 solvent wash scrubber water (mg/l)	Sample Set #8 Untreated Envirite wastewater (mg/l)	Filtrate (mg/l)	Filter cake Total (mg/kg)	TCLP (mg/l)
BDAT Metals					
Antimony	0 083-0 107	<10	<1	<10	-
Arsenic	0 059-0 093	<1	<0 1	4	0 011
Barium	0 226-0 287	<10	<1	<10	0 11
Beryllium	<0.001	<2	<0.2	<2	-
Cadmium	<0 004	<5	<0.5	53	<0 020
Chromium (hexavalent)	<0 010-0 014	0 13	<0 01	0 116	-
Chromium (total)	0 099-0 193	831	0 15	2800	<0 050
Copper	0 115-0.130	217	0.16	688	-
Lead	0 827-1 52	212	<0 01	300	<0 10
Mercury	<0 0002	<1	<0 1	<1	<0 0002
Nickel	<0 011	669	0 36	2600	-
Selenium	<0.005	<10	<1	<10	<0 010
Silver	<0 006-0 007	<2	<0 2	<2	<0 020
Thallium	0 022-0 027	<10	<1	<10	-
Zinc	0 180-0.216	151	0 130	420	-
Other Parameters					
Total organic carbon	1 97-8 36	5900			
Total solids	3580-4160	-			
Total chlorides	1 2-101	-			
Total organic halides	0 015-0 072	600			
Cyanide	<0 010	-			
Sulfide	<0 5	-			

Chemical Operating Parameters	
Hexavalent Chromium	
pH	[illegible]
Reducing agent	ferrous iron
Ratio of reducing agent to hexavalent chromium	[illegible] 2-1 0
Chemical Precipitation	
pH	8-10
Precipitating agents	lime
Filtration	
Type of filter	vacuum filter

[illegible] - Color interference
- Not [illegible]

Reference USEPA 1986a

Table 3-2 (continued)

Constituent	K086 solvent wash scrubber water (mg/l)	Sample Set #9 Untreated Envirite wastewater (mg/l)	Filtrate (mg/l)	Filter cake Total (mg/kg)	TCLP (mg/l)
BDAT Metals					
Antimony	0 083-0 107	<10	<1	<10	-
Arsenic	0 059-0.093	<1	<0 1	3	0 011
Barium	0 226-0 287	<10	<1	<10	0 20
Beryllium	<0 001	<2	<0 2	<2	-
Cadmium	<0 004	<5	<0 5	6	<0 020
Chromium (hexavalent)	<0 010-0 014	0 07	0 041	I	-
Chromium (total)	0 099-0.193	939	0 10	3400	<0 050
Copper	0 115-0 130	225	0 08	775	-
Lead	0 627-1 52	<10	<0.01	85	<0 10
Mercury	<0 0002	<1	<0 1	<1	<0 0002
Nickel	<0 011	940	0 33	3500	-
Selenium	<0 005	<10	<1	<10	<0 010
Silver	<0 006-0 007	<2	<0 2	<2	<0 020
Thallium	0 022-0 027	<10	<1	<10	-
Zinc	0 180-0 216	5	0 06	150	-
Other Parameters					
Total organic carbon	1 97-8 36	2100			
Total solids	3580-4100	-			
Total chlorides	1 2-101	-			
Total organic halides	0 015-0 072	0			
Cyanide	<0 010	-			
Sulfide	<0 5	-			

Design and Operating Parameters	
Hexavalent Chromium	
pH	4 5-3 0
Reducing agent	ferrous iron
Ratio of reducing agent to hexavalent chromium	3 2-1 0
Chemical Precipitation	
pH	8-10
Precipitating agents	lime
Filtration	
Type of filter	vacuum filter

I = Color interference
NA = Not analyzed

Reference USEPA 1986a

Table 5-2 (continued)

Constituent	K086 solvent wash scrubber water (mg/l)	Sample Set #10 Untreated Envirite wastewater (mg/l)	Filtrate (mg/l)	Filter cake Total (mg/kg)	TCLP (mg/l)
EDAT Metals					
Antimony	0 083-0 107	<10	<1	<10	-
Arsenic	0 059-0 093	<1	<0 1	5	0 016
Barium	0 226-0 287	<10	<1	<10	0 30
Beryllium	<0 001	<2	<0 2	<2	-
Cadmium	<0 004	<5	<0 5	<5	<0 020
Chromium (hexavalent)	<0 010-0 014	0 08	0 106	0 078	-
Chromium (total)	0 099-0 193	395	0 12	4400	<0 050
Copper	0 115-0 130	191	0 14	758	-
Lead	0 827-1 52	<10	<0 01	28	<0 10
Mercury	<0 0002	<1	<0 1	<1	<0 0002
Nickel	<0 011	712	0 33	4700	-
Selenium	<0 005	<10	<1	<10	<0 040
Silver	<0 006-0 007	<2	<0 2	14	<0 020
Thallium	0 022-0 027	<10	<1	<10	-
Zinc	0 180-0.216	5	0 070	43	-
Other Parameters					
Total organic carbon	1 07-8 36	0			
Total solids	3560-4160	-			
Total chlorides	1 2-101	-			
Total organic halides	0 015-0 072	<300			
Cyanide	<0 010	-			
Sulfide	<0 5	-			

Secondary Operating Parameters

Hexavalent chromium	
pH	8 5-1 0
Reducing agent	ferrous iron
Ratio of reducing agent to hexavalent chromium	5 2-1 0
Chemical Precipitation	
pH	8-10
Precipitating agents	lime
Filtration	
Type of filter	vacuum filter

I = Color interference
= Not analyzed

Reference USEPA 1986a

Table 3-2 (continued)

Constituent	K086 solvent wash scrubber water (mg/l)	Sample Set #11 Untreated Envirite wastewater (mg/l)	Filtrate (mg/l)	Filter cake Total (mg/kg)	Filter cake TCLP (mg/l)
RDAT Metals					
Antimony	0.083-0.107	<10	<1	<10	-
Arsenic	0.059-0.093	<1	<0.1	3	<0.010
Barium	0.226-0.287	<12	<1	40	0.28
Beryllium	<0.001	<2	<0.2	<2	-
Cadmium	<0.004	23	<5	50	<0.020
Chromium (hexavalent)	<0.010-0.014	0.30	<0.01	1.240	-
Chromium (total)	0.099-0.193	617	0.18	2100	<0.050
Copper	0.115-0.130	127	0.24	388	-
Lead	0.627-1.52	156	<0.01	200	<0.10
Mercury	<0.0002	<1	<0.1	<1	<0.0002
Nickel	<0.011	382	0.39	1600	-
Selenium	<0.005	<10	<1	<10	<0.040
Silver	<0.006-0.007	<2	<0.2	<2	<0.020
Thallium	0.022-0.027	<10	<1	<10	-
Zinc	0.180-0.216	135	0.1	325	-
Other Parameters					
Total organic carbon	1.97-8.56	52			
Total solids	3560-4160	-			
Total chlorides	1.2-101	-			
Total organic halides	0.015-0.072	600			
Cyanide	0.010	-			
Sulfide	<0.5	-			

Hexavalent Chromium	
pH	3.5-4.0
Reducing agent	ferrous iron
Ratio of reducing agent to hexavalent chromium	3.2:1.0
Chemical Precipitation	
pH	8-10
Precipitating agents	lime
Filtration	
Type of filter	vacuum filter

I = Color interference
- = Not analyzed

Reference USEPA 1986a

4. IDENTIFICATION OF THE BEST DEMONSTRATED AVAILABLE TECHNOLOGY FOR K086 SOLVENT WASH

This section presents the rationale for the determination of best demonstrated available technology (BDAT) for K086 organics and metals treatment. As discussed in Section 1 and summarized here, the Agency examines all the available data for the demonstrated technologies to determine whether one of the technologies performs significantly better than another. Next, the "best" performing treatment technology is evaluated to determine whether the resulting treatment is substantial. If the "best" technology provides substantial treatment and it has been determined that the technology is also available to the affected industry, then the technology represents BDAT.

4.1 BDAT for Treatment of Organics

The only demonstrated technology for treatment of K086 solvent wash that the Agency has data for is liquid injection incinerator where the liquid was injected in the nozzle on the rotary kiln unit. Nevertheless, the Agency believes that the other demonstrated treatment technologies, including liquid injection on other incinerators, would not improve the level of performance for K086; therefore EPA believes that incineration is "best." EPA's rationale is provided below.

Although the Agency encourages recycling to minimize the amount of waste that needs to be land disposed, batch and fractional distillation could not improve the level of performance because the distillation

process leaves behind still bottoms that need additional treatment for organics. EPA believes that well-designed and well-operated fuel substitution systems would not achieve better results because such systems operate at approximately the same temperature with similar residence times and turbulence patterns as incineration systems.

Consistent with EPA's methodology for determining BDAT, the Agency evaluated the incineration performance data to determine whether incineration provides substantial treatment for K086 solvent wash. As a first step, EPA examined the data to determine whether any data represented treatment by a poorly designed or poorly operated system. EPA did not find any such data and, therefore, used all the data in its determination of substantial treatment.

Next, EPA adjusted the data values based on the analytical recovery values in order to take into account analytical interferences associated with the chemical makeup of the treated sample. In developing recovery data (also referred to as accuracy data), EPA first analyzed a waste for a constituent and then added a known amount of the same constituent (i.e., spike) to the waste material. The total amount recovered after spiking minus the initial concentration in the sample divided by the amount added is the recovery value. Percent recovery values for BDAT list metals used in adjustment of the performance data are presented in Appendix B. The analytical data were adjusted for accuracy using the lowest recovery value for each constituent.

EPA's determination of substantial is based on the reduction of BDAT list organic constituents from levels as high as (CBI) ppm to nondetectable levels (i.e., 0.10 ppm) in the scrubber water residual. The Agency believes that the reduction of hazardous organic constituents is substantial and that incineration is available to treat organics present in K086 solvent wash wastes because it is commercially available. Therefore, incineration represents BDAT for the organics present in K086 solvent wash.

4.2 BDAT for Treatment of Metals

Treatment of the organics present in K086 solvent wash using incineration generates a scrubber water (i.e., wastewater residual) that may need treatment for metals. Treatment of the scrubber water may generate a precipitate (i.e., nonwastewater residual) that also needs treatment for metals.

4.2.1 Wastewater

The only demonstrated technology identified for treatment of metals in K086 scrubber water that the Agency has data for chromium reduction followed by lime precipitation and sludge filtration. The Agency has no reason to expect that the other chemical precipitation processes could improve the level of performance; therefore, chromium reduction followed by lime precipitation and sludge filtration is the "best" performing technology. As discussed earlier, EPA does not have treatment data for K086 solvent wash wastewaters generated from incineration; however, EPA does have treatment data for metal-containing wastewaters (Envirite) believed to be similar to K086 solvent wash scrubber waters.

Data collected by the Agency on treatment of the Envirite wastewater by chromium reduction lime precipitation and vacuum sludge filtration are shown in Table 3-2. Operating data collected during treatment of this waste show that these data represent the performance of a well-designed, well-operated treatment system; therefore, all data were used to determine substantial treatment.

EPA adjusted the data values based on the analytical recovery values in order to take into account analytical interferences associated with the chemical makeup of the treated sample. In developing recovery data (also referred to as accuracy data), EPA first analyzed a waste for a constituent and then added a known amount of the same constituent (i.e., spike) to the waste material. The total amount recovered after spiking minus the initial concentration in the sample divided by the amount added is the recovery value. Percent recovery values for BDAT list metals used in adjustment of the performance data are presented in Appendix B. The analytical data were adjusted for accuracy using the lowest recovery value for each constituent.

EPA's determination of substantial wastewater treatment for the Envirite treatment system is based on the reductions of hexavalent chromium from 917 mg/l to 0.058 mg/l, chromium from 2,581 mg/l to 0.12 mg/l, lead from 212 mg/l to 0.01 mg/l, copper from 225 mg/l to 0.08 mg/l, nickel from 16,330 mg/l to 0.33 mg/l, and zinc from 171 mg/l to 0.115 mg/l.

The Agency believes that these reductions of hazardous constituents are substantial and that chromium reduction followed by lime precipitation and sludge filtration is available to treat K086 scrubber waters because it is commercially available; therefore, chromium reduction followed by lime precipitation and sludge filtration represents BDAT for K086 scrubber waters.

4.2.2 Nonwastewaters

For BDAT list metals in the K086 wastewater treatment precipitate, the addition of excess lime (i.e., lime stabilization) during the precipitation process followed by sludge filtration has been identified as the only demonstrated technology for which the Agency has data. The Agency has no reason to believe that other stabilization processes could improve the level of performance; therefore, lime stabilization followed by sludge filtration is the "best" performing technology for treatment of the precipitate generated during treatment of the K086 scrubber water. The Agency does not have treatment data for the precipitate specifically generated during treatment of the K086 scrubber waters; however, EPA does have treatment data for a metal-containing precipitate (Envirite) believed to be similar to the K086 wastewater treatment precipitate.

Data collected by the Agency on treatment of the Envirite precipitate by lime stabilization and sludge filtration are shown in Table 3-2. Operating data collected during treatment of this waste show that these data represent the performance of a well-designed, well-operated treatment system; therefore, all these data were used to determine substantial treatment.

EPA adjusted the data values based on the analytical recovery values in order to take into account analytical interferences associated with the chemical makeup of the treated sample. In developing recovery data (also referred to as accuracy data), EPA first analyzed a waste for a constituent and then added a known amount of the same constituent (i.e., spike) to the waste material. The total amount recovered after spiking minus the initial concentration in the sample divided by the amount added is the recovery value. Percent recovery values for BDAT list metals used in adjustment of the performance data are presented in Appendix B. The analytical data were adjusted for accuracy using the lowest recovery value for each constituent.

EPA does not have the TCLP leachate values of the untreated waste to compare to the TCLP leachate values of the treated waste. The Agency believes that theoretical TCLP leachate values for the treated waste can be calculated by dividing the total metal concentrations of the treated waste by a dilution factor of 20. This dilution factor accounts for the amount of waste and extraction fluid used in the test. A discussion of the dilution factor can be found in "Best Demonstrated Available Technology (BDAT) Background Document for F001-F005 Spent Solvents."

EPA compared the theoretical leachate value of 815 mg/l to the actual TCLP leachate value of 0.050 mg/l for chromium and the theoretical leachate value of 140 mg/l to the actual leachate value of 0.10 mg/l for lead. Based on these comparisons, the Agency believes that lime

stabilization followed by sludge filtration provides substantial treatment.

The Agency believes that these reductions of hazardous constituents are substantial and that lime stabilization followed by sludge filtration is available to treat K086 precipitated wastes because it is commercially available; therefore, lime stabilization followed by sludge filtration represents BDAT for K086 precipitated wastes.

5. SELECTION OF REGULATED CONSTITUENTS

This section presents the rationale for selection of the regulated constituents, from the BDAT list of constituents, for the K086 solvent wash treatability group. In the previous section, incineration was determined to achieve a level of performance that represents BDAT for treatment of organics present in K086 solvent wash. Chromium reduction followed by chemical precipitation and filtration was determined to achieve a level of performance that represents BDAT for treatment of metals present in K086 scrubber waters, and lime stabilization followed by sludge filtration was determined to achieve a level of performance that represents BDAT for treatment of metals present in the precipitate from treatment of the K086 scrubber water. Therefore, performance data from the determined BDAT for organics treatment and BDAT for metals treatment will be used to help select the regulated constituents.

When developing performance data for treatment technologies, the Agency analyzes untreated and treated wastes for the constituents presented in Table 1-1. The list is referred to by EPA as the BDAT list of constituents and is an expanding list that does not preclude the addition of new constituents as additional key parameters are identified. The list is divided into the following categories: volatile organics, semivolatile organics, metals, inorganics other than metals, pesticides, PCBs, and dioxins and furans.

5.1 Identification of Constituents in the Untreated Waste and Waste Residuals

The first step in selecting candidate constituents to be regulated is to identify the BDAT list constituents present in the untreated K086 solvent wash wastes (i.e., the waste as generated, the scrubber water). The regulated constituent must demonstrate one of two criteria:

1. The constituent is detected in the untreated waste above its detection limit. (A detection limit is defined as the practical quantification limit, PQL, that is the method detection limit achievable when using an EPA-approved analytical method specified for a particular analysis in SW-846, 3rd Edition.)

2. The constituent could not be detected in the untreated waste due to high detection limits caused by analytical interference, but is detected in any of the treatment residuals and is likely to be present in the untreated waste.

Table 5-1 (at the end of this section) shows which of the 231 BDAT list constituents were detected, not detected, and not analyzed in the K086 solvent wash and scrubber water incineration residual. Of the 231 BDAT constituents, the Agency analyzed for 193. None of the 28 pesticide constituents were analyzed because of the extreme unlikelihood of their presence. Another 10 volatile and semivolatile organic constituents were analyzed for because at the time the analysis was performed, these constituents were not on the BDAT pollutant list. Of the 193 constituents analyzed 19 were detected in the K086 solvent wash. These 19 constituents concentrations are given in Table 5-2 (at the end of this section).

For those constituents not detected (ND) in the untreated waste, but detected in the scrubber water (i.e., arsenic, silver, vanadium), it was assumed that such constituents may very well be present in the K086

solvent wash, but were undetected because of masking or interference by other constituents in the K086 solvent wash. These three constituent concentrations are also given in Table 5-2. Detection limits for the analytical methods used to analyze K086 solvent wash have been classified as confidential information by the generator. The analytical detection limits for the scrubber water are given in Appendix C.

5.2 Evaluation of the Process Generating the K086 Solvent Wash Wastes

EPA has examined the K086 waste-generating process and believes that solvents other than those found in the tested waste can be used to clean ink formulating equipment or can be used in the formulation of inks containing lead and chromium. Furthermore, the Agency has data indicating that the following 8 BDAT list organic solvents are used in the ink formulation process and/or in cleaning ink formulating equipment: n-butyl alcohol, 1,2-dichlorobenzene, ethyl acetate, methanol, methyl ethyl ketone, nitrobenzene, 1,1,1-trichloroethane, and trichloroethylene. EPA is concerned that by not considering these other solvents not found in the tested waste, the Agency would not only be presenting an incentive to switch to these solvents, but would also be sending an erroneous signal that EPA is not concerned about land disposal of these other constituents.

5.3 Determination of Significant Treatment from BDAT

The next step in selecting the constituents to be regulated is to eliminate those identified constituents in the waste that were not significantly treated by the technologies designated as BDAT.

5.3.1 BDAT List Organic Constituents

Table 5-2 presents the concentrations of constituents in the organics treatment residual from incineration, i.e., scrubber water. The data demonstrate that all the organic constituents detected in the K086 solvent wash are reduced signficantly, especially in the cases of acetone, bis(2-ethylhexyl) phthalate, napthalene, cyclohexanone, and xylene. This indicates that incineration, the BDAT identified for organics treatment, is effective in reducing organic constituents to nondetectable levels in the scrubber water. The performance data also show incineration as treatment for the small quantities of cyanide and sulfide present in the K086 solvent wash.

As discussed in Section 3.2.1, the Agency is using theoretical bond energies as a surrogate for measuring combustiblity. In general, the higher the bond energy for a constituent, the more difficult it is to combust that constituent. Out of all the BDAT list organics either determined to be present in K086 solvent wash by examining the waste generating-process or actually detected in K086 solvent wash by analytical analyses, bis(2-ethylhexyl)phthalate, napthalene, xylene and ethyl benzene rank as the most difficult to treat based on their high bond energies. Since these four constituents were actually treated to nondetectable concentrations in the K086 scrubber water, EPA believes that the other organic constituents can be treated to nondetectable levels. (Table 5-3, at the end of this section, shows the calculated bond energies for the candidate organic constituents.)

5.3.2 BDAT List Metal Constituents

The data show a scrubber water with no treatable levels of organics, but treatable amounts of metals. The detected metals in the K086 solvent wash scrubber water include antimony, arsenic, barium, chromium, copper, hexavalent chromium, lead, silver, vanadium, and zinc. The Agency does not have treatment data for K086 scrubber water; however, EPA has treatment data using chromium reduction, followed by chemical precipitation incorporated with lime stabilization and sludge filtration, of a waste similar (i.e., Envirite wastewaters). Treatment of the metals present in the Envirite wastewaters is demonstrated by the significant reduction of cadmium, hexavalent chromium, chromium, copper, lead, nickel, and zinc in the filtrate and in the filter cake leachate. However, the untreated Envirite wastewaters do not contain detectable levels of antimony, arsenic, barium, silver, and vanadium. Therefore, even though these metals may be present in quantities below the detection levels, one cannot determine whether these metals were treated since the amounts present cannot be measured.

5.4 Rationale for Selection of Regulated Constituents

Table 5-4 (at the end of this section) presents all of the candidate constituents that were detected in the untreated waste, used in the waste generating process, and treated with the identified BDAT. Note that all 25 could be regulated; however, the Agency believes that regulation of fewer constituents will have the same desired effect if the constituents are selected carefully.

EPA is regulating all the organic constituents detected in K086 solvent wash and all the BDAT list organic constituents that were not detected but could be present in other solvent washes generated in cleaning of ink formulating equipment. Since K086 solvent washes can vary depending on the type of solvent or solvents used to clean ink formulating equipment, the Agency has chosen to regulate all the candidate organics because regulation of a few may not control land disposal of the others. Acetone, n-butyl alcohol, ethyl acetate, ethylbenzene, methanol, methyl isobutyl ketone, methyl ethyl ketone, methylene chloride, toluene, 1,1,1-trichloroethane, trichloroethylene, xylene, bis(2-ethylhexyl) phthalate, cyclohexanone, 1,2-dichlorobenzene, napthalene, and nitrobenzene are the 17 BDAT list organic constituents selected as the regulated organic constituents for wastewater and nonwastewater forms of K086 solvent wash. Cyanide and sulfide were not chosen as regulated constituents because they are present in small quantities and EPA believes that they will be controlled by regulation of the other constituents.

In selecting metal constituents to regulate, EPA considered both the concentration of the metal in the incinerator residual (i.e., scrubber water) and the concentration of the metal in the K086 solvent wash. By using metal concentrations in the K086 solvent wash as part of the basis for selecting metal constituents to regulate, EPA has included some metals that were not in the scrubber water at treatable concentrations. EPA's rationale for this selection approach is discussed below.

An incinerator is not specifically designed to treat metals. Accordingly, the concentration of metals found in the scrubber water and in the ash will depend on the specific design and operating parameters selected for volatilization and destruction of the organic constituents in the waste. For example, an incinerator that operates at a higher temperature would be expected to have higher metal concentrations in the scrubber water than an incinerator that operates at a lower temperature. If EPA relied solely on the residual metal concentrations in one, or even several, incinerator test(s) in making decisions on which constituents to regulate, the Agency could easily decide not to regulate metal constituents that would appear at significant concentrations in another incinerator treating the same waste under different design and operating parameters. In addition to metal residual concentrations varying from one incinerator to the next because of different operating temperatures, residence times, and turbulence effects, residual metal concentrations will also vary because the K086 solvent wash can have different concentrations of a particular metal constituent. In particular, lead and chromium concentrations can vary in K086 solvent wash relative to the amounts added to a particular ink batch.

For the above reasons, EPA is selecting constituents for lead and chromium based on both the metal concentration in the K086 solvent wash and scrubber water residual. Facilities are reminded that if the incinerator scrubber water residual as generated already complies with the BDAT treatment standards, the residual does not need to be treated.

Table 5-1 BDAT Constituents Detected or Not Detected in the K086 Solvent Wash and Scrubber Water Samples

BDAT reference no	Parameter	CAS no	K086 solvent wash (mg/kg)	Scrubber water (μg/l)
	Volatile Organics			
222	Acetone	67-64-1	D	ND
1	Acetonitrile	75-05-8	ND	ND
2	Acrolein	107-02-8	ND	ND
3	Acrylonitrile	107-13-1	ND	ND
4	Benzene	71-43-2	ND	ND
5	Bromodichloromethane	75-27-4	ND	ND
6	Bromomethane	74-83-9	ND	ND
223	n-Butyl alcohol	71-36-3	NL	NL
7	Carbon tetrachloride	56-23-5	ND	ND
8	Carbon disulfide	75-15-0	ND	ND
9	Chlorobenzene	108-90-7	ND	ND
10	2-Chloro-1,3-butadiene	108-90-7	ND	ND
11	Chlorodibromomethane	108-90-7	ND	ND
12	Chloroethane	75-00-3	ND	ND
13	2-Chloroethyl vinyl ether	110-75-8	ND	ND
14	Chloroform	67-66-3	ND	ND
15	Chloromethane	74-87-3	ND	ND
16	3-Chloropropene	107-05-1	ND	ND
17	1,2-Dibromo-3-chloropropane	96-12-8	ND	ND
18	1,2-Dibromoethane	106-93-4	ND	ND
19	Dibromomethane	74-95-3	ND	ND
20	Trans-1,4-Dichloro-2-butene	110-57-6	ND	ND
21	Dichlorodifluoromethane	75-71-8	ND	ND
22	1,1-Dichloroethane	75-34-3	ND	ND
23	1,2-Dichloroethane	107-06-2	ND	ND
24	1,1-Dichloroethylene	75-35-4	ND	ND
25	Trans-1,2-Dichloroethene	156-60-5	ND	ND
26	1,2-Dichloropropane	78-87-5	ND	ND
27	Trans-1,3-Dichloropropene	10061-02-6	ND	ND
28	cis-1,3-Dichloropropene	10061-01-5	ND	ND
29	1,4-Dioxane	123-91-1	ND	ND
224	2-Ethoxyethanol	110-80-5	NL	NL
225	Ethyl acetate	141-78-6	NL	NL
226	Ethyl benzene	100-41-4	D	ND

Table 5-1. (Continued)

BDAT reference no	Parameter	CAS no	K086 solvent wash (mg/kg)	Scrubber water (μg/l)
	Volatile Organics (continued)			
30	Ethyl cyanide	10712-0	ND	ND
227	Ethyl ether	60-29-7	NL	NL
31	Ethyl methacrylate	97-63-2	ND	ND
214	Ethylene oxide	75-21-8	NL	NL
32	Ioaomethane	74-88-4	ND	ND
33	Isobutyl alcohol	78-83-1	ND	ND
228	Methanol	67-56-1	NL	NL
34	Methyl ethyl ketone	78-93-3	ND	ND
229	Methyl isobutyl ketone	108-10-1	D	ND
35	Methyl methacrylate	80-62-6	ND	ND
36	Methyl methanesulfonate	66-27-3	ND	ND
37	Methylacrylonitrile	126-98-7	ND	ND
38	Methylene chloride	75-09-2	D	ND
230	2-Nitropropane	79-46-9	NL	NL
39	Pyridine	110-86-1	ND	ND
40	1,1,1,2-Tetrachloroethane	630-20-6	ND	ND
41	1,1,2,2-Tetrachloroethane	79-34-5	ND	ND
42	Tetrachloroethene	127-18-4	ND	ND
43	Toluene	108-88-3	D	ND
44	Tribromomethane	75-25-2	ND	ND
45	1,1,1-Trichloroethane	71-55-6	ND	ND
46	1,1,2-Trichloroethane	79-00-5	ND	ND
47	Trichloroethene	79-01-6	ND	ND
48	Trichloromonofluoromethane	75-69-4	ND	ND
49	1,2,3-Trichloropropane	96-18-4	ND	ND
231	1,1,2-Trichloro-1,2,2-trifluoroethane	[illegible]	NL	NL
50	Vinyl chloride	75-01-4	ND	ND
215	1,2-Xylene	95-47-6	D	ND
216	1,3-Xylene	108-38-3	D	ND
217	1,4-Xylene	106-44-5	D	ND
	Semivolatiles			
51	Acenaphthalene	208-96-8	ND	ND
52	Acenaphthene	83-32-9	ND	ND

Table 5-1. (Continued)

BDAT reference no.	Parameter	CAS no.	K086 solvent wash (mg/kg)	Scrubber water (μg/l)
	Semivolatiles (continued)			
53	Acetophenone	96-86-2	ND	ND
54	2-Acetylaminofluorene	53-96-3	ND	ND
55	4-Aminobiphenyl	92-67-1	ND	ND
56	Aniline	62-53-3	ND	ND
57	Anthracene	120-12-7	ND	ND
58	Aramite	140-57-8	ND	ND
59	Benz(a)anthracene	56-55-3	ND	ND
218	Benzal chloride	98-87-3	NL	NL
60	Benzal chloride	98-87-3	ND	ND
61	Benzenethiol	108-98-5	ND	ND
62	Benzo(a)pyrene	50-32-8	ND	ND
63	Benzo(b)fluoranthene	205-99-2	ND	ND
64	Benzo(ghi)perylene	191-24-2	ND	ND
65	Benzo(k)fluoranthene	207-08-9	ND	ND
66	p-Benzoquinone	106-51-4	ND	ND
67	Bis(2-chloroethoxy)methane	111-91-1	ND	ND
68	Bis(2-chloroethyl)ether	111-44-4	ND	ND
69	Bis(2-chloroisopropyl)ether	39638-32-9	ND	ND
70	Bis(2-ethylhexyl)phthalate	117-81-7	D	ND
71	4-Bromophenyl phenyl ether	101-55-3	ND	ND
72	Butyl benzyl phthalate	85-68-7	ND	ND
73	2-sec-Butyl-4,6-dinitrophenol	88-85-7	ND	ND
74	p-Chloroaniline	106-47-8	ND	ND
75	Chlorobenzilate	510-15-6	ND	ND
76	p-Chloro-m-cresol	59-50-7	ND	ND
77	2-Chloronaphthalene	91-58-7	ND	ND
78	2-Chlorophenol	95-57-8	ND	ND
79	3-Chloropropionitrile	542-76-7	ND	ND
80	Chrysene	218-01-9	ND	ND
81	ortho-Cresol	95-48-7	ND	ND
82	para-Cresol	106-44-5	ND	ND
232	Cyclohexanone	108-94-1	D	ND
83	Dibenz(a,h)anthracene	53-70-3	ND	ND
84	Dibenzo(a,e)pyrene	192-65-4	ND	ND
85	Dibenzo(a,i)pyrene	189-55-9	ND	ND
86	m-Dichlorobenzene	541-73-1	ND	ND
87	o-Dichlorobenzene	95-50-1	ND	ND

Table 5-1. (Continued)

BDAT reference no	Parameter	CAS no	K086 solvent wash (mg/kg)	Scrubber water (μg/l)
	Semivolatiles (continued)			
88	p-Dichlorobenzene	106-46-7	ND	ND
89	3,3'-Dichlorobenzidine	91-94-1	ND	ND
90	2,4-Dichlorophenol	120-83-2	ND	ND
91	2,6-Dichlorophenol	87-65-0	ND	ND
92	Diethyl phthalate	84-66-2	ND	ND
93	3,3'-Dimethoxybenzidine	119-90-4	ND	ND
94	p-Dimethylaminoazobenzene	60-11-7	ND	ND
95	3,3'-Dimethylbenzidine	119-93-7	ND	ND
96	2,4-Dimethylphenol	105-67-9	ND	ND
97	Dimethyl phthalate	131-11-3	ND	ND
98	Di-n-butyl phthalate	84-74-2	ND	ND
99	1,4-Dinitrobenzene	100-25-4	ND	ND
100	4,6-Dinitro-o-cresol	534-52-1	ND	ND
101	2,4-Dinitrophenol	51-28-5	ND	ND
102	2,4-Dinitrotoluene	121-14-2	ND	ND
103	2,6-Dinitrotoluene	606-20-2	ND	ND
104	Di-n-octyl phthalate	117-84-0	ND	ND
105	Di-n-propylnitrosamine	621-64-7	ND	ND
106	Diphenylamine	122-39-4	ND	ND
219	Diphenylnitrosamine	86-30-6	ND	ND
107	1,2-Diphenylhydrazine	122-66-7	ND	ND
108	Fluoranthene	206-44-0	ND	ND
109	Fluorene	86-73-7	ND	ND
110	Hexachlorobenzene	118-74-1	ND	ND
111	Hexachlorobutadiene	87-68-3	ND	ND
112	Hexachlorocyclopentadiene	77-47-4	ND	ND
113	Hexachloroethane	67-72-1	ND	ND
114	Hexachlorophene	70-30-4	ND	ND
115	Indeno(1,2,3-cd)pyrene	[illegible]	ND	ND
116	Isosafrole	120-58-1	ND	ND
117	Methapyrilene	91-80-5	ND	ND
118	3-Methylcholanthrene	56-49-5	ND	ND
119	4,4'-Methylenebis			
120	(2-chloroaniline)	101-14-4	ND	ND
121	Naphthalene	91-20-3	D	ND
122	1,4-Naphthoquinone	130-15-4	ND	ND
123	1-Naphthylamine	134-32-7	ND	ND

Table 5-1. (Continued)

BDAT reference no.	Parameter	CAS no	K086 solvent wash (mg/kg)	Scrubber water (μg/l)
	Semivolatiles (continued)			
124	2-Naphthylamine	91-59-8	ND	ND
125	p-Nitroaniline	100-01-6	ND	ND
126	Nitrobenzene	98-95-3	ND	ND
127	4-Nitrophenol	100-02-7	ND	ND
128	N-Nitrosodi-n-butylamine	924-16-3	ND	ND
129	N-Nitrosodiethylamine	55-18-5	ND	ND
130	N-Nitrosodimethylamine	62-75-9	ND	ND
131	N-Nitrosomethylethylamine	10595-95-6	ND	ND
132	N-Nitrosomorpholine	59-89-2	ND	ND
133	N-Nitrosopiperidine	100-75-4	ND	ND
134	n-Nitrosopyrrolidine	930-55-2	ND	ND
135	5-Nitro-o-toluidine	99-65-8	ND	ND
136	Pentachlorobenzene	608-93-5	ND	ND
137	Pentachloroethane	76-01-7	ND	ND
138	Pentachloronitrobenzene	82-68-8	ND	ND
139	Pentachlorophenol	87-86-5	ND	ND
140	Phenacetin	62-44-2	ND	ND
141	Phenanthrene	85-01-8	ND	ND
142	Phenol	108-95-2	ND	ND
220	Phthalic anhydride	85-44-9	NL	NL
143	2-Picoline	109-06-8	ND	ND
144	Pronamide	23950-58-5	ND	ND
145	Pyrene	129-00-0	ND	ND
146	Resorcinol	108-46-3	ND	ND
147	Safrole	94-59-7	ND	ND
148	1,2,4,5-Tetrachlorobenzene	95-94-3	ND	ND
149	2,3,4,6-Tetrachlorophenol	58-90-2	ND	ND
150	1,2,4-Trichlorobenzene	120-82-1	ND	ND
151	2,4,5-Trichlorophenol	[illegible]	ND	ND
152	2,4,6-Trichlorophenol	88-06-2	ND	ND
153	Tris(2,3-dibromopropyl) phosphate	126-72-7	ND	ND
	Metals			
154	Antimony	7440-36-0	D	D
155	Arsenic	7440-38-2	ND	D

Table 5-1. (Continued)

BDAT reference no.	Parameter	CAS no	K086 solvent wash (mg/kg)	Scrubber water (μg/l)
	Metals (continued)			
156	Barium	7440-39-3	D	D
157	Beryllium	7440-41-7	ND	ND
158	Cadmium	7440-43-9	ND	ND
159	Chromium	7440-47-32	D	D
160	Copper	7440-50-8	D	D
221	Hexavalent Chromium	NA	D	D
161	Lead	7439-92-1	D	D
162	Mercury	7439-97-6	ND	ND
163	Nickel	7440-02-0	D	ND
164	Selenium	7782-49-2	ND	ND
165	Silver	7440-22-4	ND	D
166	Thallium	7440-28-0	ND	ND
167	Vanadium	7440-62-2	ND	D
168	Zinc	7440-66-6	D	D
	Inorganics			
169	Cyanide	57-12-5	D	ND
170	Fluoride	16964-48-8	ND	ND
171	Sulfide	8496-25-8	D	ND
	Organochlorine Pesticides			
172	Aldrin	309-00-2	-	-
173	alpha-BHC	319-84-6	-	-
174	beta-BHC	319-85-7	-	-
175	delta-BHC	319-86-8	-	-
176	gamma-BHC	58-89-9	-	-
177	Chlordane	57-74-9	-	-
178	DDD	72-54-8	-	-
179	DDE	72-55-9	-	-
180	DDT	50-29-3	-	-
181	Dieldrin	60-57-1	-	-
182	Endosulfan I	959-98-8	-	-
183	Endosulfan II	33213-6-5	-	-
184	Endrin	72-20-8	-	-
185	Endrin aldehyde	7421-93-4	-	-

Table 5-1. (Continued)

BDAT reference no	Parameter	CAS no	K086 solvent wash (mg/kg)	Scrubber water (μg/l)
	Organochlorine Pesticides (continued)			
186	Heptachlor	76-44-8	-	-
187	Heptachlor epoxide	1024-57-3	-	-
188	Isodrin	465-73-6	-	-
189	Kepone	143-50-0	-	-
190	Methoxyclor	72-43-5	-	-
191	Toxaphene	8001-35-2	-	-
	Phenoxyacetic Acid Herbicides			
192	2,4-Dichlorophenoxyacetic acid	94-75-7	-	-
193	Silvex	93-72-1	-	-
194	2,4,5-T	93-76-5	-	-
	Organophosphorous Insecticides			
195	Disulfoton	298-04-4	-	-
196	Famphur	52-85-7	-	-
197	Methyl parathion	298-00-0	-	-
198	Parathion	56-38-2	-	-
199	Phorate	298-02-2	-	-
	PCBs			
200	Aroclor 1016	12674-11-2	ND	ND
201	Aroclor 1221	11104-28-2	ND	ND
202	Aroclor 1232	11141-16-5	ND	ND
203	Aroclor 1242	53469-21-9	ND	ND
204	Aroclor 1248	12672-29-6	ND	ND
205	Aroclor 1254	11097-69-1	ND	ND
206	Aroclor 1260	11096-82-5	ND	ND
	Dioxins and Furans			
207	Hexachlorodibenzo-p-dioxins	NA	ND	ND
208	Hexachlorodibenzofuran	NA	ND	ND
209	Pentachlorodibenzo-p-dioxins	NA	ND	ND
210	Pentachlorodibenzofuran	NA	ND	ND

Table 5-1. (Continued)

BDAT reference no	Parameter	CAS no	K086 solvent wash (mg/kg)	Scrubber water (μg/l)
	Dioxins and Furans (continued)			
211	Tetrachlorodibenzo-p-dioxins	NA	ND	ND
212	Tetrachlorodibenzofuran	NA	ND	ND
213	2,3,7,8-Tetrachlorodibenzo-p-dioxin	NA	ND	ND

NL = Not on list at the time of analysis
ND = Not detected
D = Detected
- = No analysis performed because of the low likelihood of its presence.
NA = Not applicable

Reference: USEPA 1987a

Table 5-2 BDAT Constituent Concentrations in Untreated K086 Solvent Wash Waste and Scrubber Water Residual

BDAT reference no.	Constituent	K086 solvent wash Untreated waste (mg/l)	Scrubber water (mg/l)
	Volatile organics		
222	Acetone	CBI	<0.010
226	Ethylbenzene	CBI	<0.005
229	Methyl isobutyl ketone	CBI	<0.010
38	Methylene Chloride	CBI	<0.010
43	Toluene	CBI	<0.010
215-217	Xylene (total)	CBI	<0.005
	Semivolatile organics		
70	Bis(2-ethylhexyl)phthalate	CBI	<0.010
232	Cyclohexanone	CBI	<0.005
121	Naphthalene	CBI	<0.010
	Metals		
154	Antimony	CBI	0.083-0.107
155	Arsenic	CBI	0 059-0.093
156	Barium	CBI	0.226-0.287
159	Chromium (total)	CBI	0.099-0.193
221	Chromium (hexavalent)	CBI	<0.010-0.014
160	Copper	CBI	0 115-0 130
161	Lead	CBI	0.827-1 52
163	Nickel	CBI	<0.011
165	Silver	CBI	<0.006-0.007
167	Vanadium	CBI	0.022-0.027
168	Zinc	CBI	0.180-0.216
	Inorganics		
169	Cyanide	CBI	<0 010
171	Sulfide	CBI	<0 5

CBI = Confidential Business Information

Reference: USEPA 1987a

Table 5-3 Calculated Bond Energy for the Candidate Organic Constituents

Constituent	Calculated bond energy (kcal/mol)
BDAT Volatile Organics	
Acetone	945
n-Butyl alcohol	1350
Ethyl acetate	1655
Ethyl benzene	1900
Methanol	495
Methyl isobutyl ketone	1600
Methyl ethyl ketone	1230
Methylene chloride	355
Toluene	1615
1,1,1-Trichloroethane	625
Trichloroethylene	485
Xylenes (total)	1900
BDAT Semivolatile Organics	
Bis(2-ethylhexyl)phthalate	6620
Cyclohexanone	1685
1,2-Dichlorobenzene	1320
Naphthalene	2140
Nitrobenzene	1430

Reference Sanderson 1971

Table 5-4 Candidate Constituents for Regulation of K086 Solvent Wash

BDAT reference no	Constituent
Organics	
Volatile	
222	Acetone
223	n Butyl alcohol
225	Ethyl acetate
226	Ethylbenzene
228	Methanol
229	Methyl isobutyl ketone
54	Methyl ethyl ketone
56	Methylene chloride
43	Toluene
45	1,1,1-Trichloroethane
47	Trichloroethylene
215-217	Xylene (total)
Semivolatile Organics	
70	Bis(2-ethylhexyl)phthalate
232	Cyclohexanone
87	1,2-Dichlorobenzene
121	Naphthalene
126	Nitrobenzene
Metals	
159	Chromium (total)
221	Chromium (hexavalent)
160	Copper
161	Lead
163	Nickel
168	Zinc
Inorganics	
169	Cyanide
171	Sulfide

6. CALCULATION OF BDAT TREATMENT STANDARDS

The purpose of this section is to calculate the actual treatment standards using analytical treatment data for the regulated constituents selected in Section 5. As discussed in the Introduction, the following steps are taken to derive the BDAT treatment standards:

1. The Agency evaluates the available data for the BDAT treatment technologies and deletes any data representing poor design or operation of the treatment systems.

2. Next, averages for accuracy-corrected constituent concentrations are calculated and a variability factor are also determined for each constituent selected for regulation.

3. The BDAT treatment standard for each constituent selected for regulation is determined by multiplying the average accuracy-corrected total composition by the appropriate variability factor.

Using these three steps, the following sections discuss the calculation of the BDAT list organic and metal treatment standards for K086 solvent wash nonwastewaters and wastewaters. Appendix B presents the calculation of the corrected average concentrations and the quality assurance/quality control data used to calculate the values. The method for calculation of the variability factors is presented in Appendix A, and the actual calculations can be found in the Administrative Record for K086 solvent wash.

6.1 Calculation of Treatment Standards for Nonwastewater Forms of K086 Solvent Wash

For purposes of describing the applicability of the BDAT treatment standards, EPA has defined nonwastewaters as wastes that contain greater than 1 percent filterable solids or greater than 1 percent total organic

carbon (TOC). For K086 solvent wash, EPA is proposing nonwastewater standards that would apply to untreated K086 solvent wash (considered to be a nonwastewater because the TOC value would be greater than one percent) and to the precipitated residual generated from treatment of K086 incinerator scrubber waters (a nonwastewater based on the filterable solids content). Below is a description of how the BDAT treatment standards were calculated for BDAT list organics and metals in K086 nonwastewaers.

6.1.1 Organic Treatment Standards

Section 5.4 describes the specific organic constituents that EPA has selected for regulation. In general, the BDAT list organic treatment standards for nonwastewaters are derived from ash residual data when BDAT represents incineration. In the case of K086 solvent wash, EPA could not base nonwastewater standards on residual ash concentrations because incineration of this waste did not result in an ash residual. In order to establish standards for the BDAT list organics in nonwastewaters, EPA related the treatment performance represented by the scrubber water organic concentrations to the BDAT list organic concentrations that would be expected in nonwastewater residuals generated from treatment of K086 scrubber water. This relationship is discussed in more detail below.

The Agency does not have data on the filtered precipitate generated specifically from treatment of K086 solvent wash scrubber waters. The incineration data presented in Section 5 show that organic levels in the

K086 solvent wash scrubber water are nondetectable. The Agency believes that metals treatment of the K086 solvent wash scrubber waters can generate a nonwastewater, the filtered precipitate, that will also have nondetectable levels of organics. Therefore, K086 solvent wash treatment standards for organic constituents in a nonwastewater matrix were calculated based on the organic detection limits of a wastewater treatment filter cake (Envirite) determined to be similar to the K086 solvent wash filter cake.

In estimating the analytical detection levels of organics for the precipitated residual waste, EPA examined available data on detection levels for 15 chemically precipitated wastes believed to be most similar to the waste that would be generated by metals treatment of K086 scrubber water. These data are presented in Appendix E and consist of detection levels for 7 of the 12 volatile constituents selected for regulation. Detection levels were not available for the 5 semivolatile constituents selected for regulation. For the 5 volatile constituents and the 5 semivolatile constituents where EPA does not have detection levels, the Agency is proposing the highest volatile detection level observed in the similar wastes. EPA believes that this approach provides a conservative estimate of the detection levels.

No data were deleted because of poor design or operation of the treatment system. The corrected average concentrations, determined variability factors, and calculated organic standards for K086 nonwastewaters are present in Table 6-1.

6.1.2 Metal Treatment Standards

As stated previously, the Agency does not have data for the filtered precipitate generated specifically from treatment of K086 scrubber water. Therefore, the Agency is transferring levels of performance from a similar waste treated at Envirite.

The best measure of metals in a nonwastewater matrix that may migrate into the environment is the analysis of the toxicity characteristics leaching procedure (TCLP) extract. Therefore, BDAT treatment standards for metals were calculated based on TCLP data from the Envirite filter cake determined to be similar to K086 solvent wash filter cake.

The data used for calculation of the K086 solvent wash nonwastewater metal standards is presented in Table 3-2. None of the data were deleted because of poor design or operation of the treatment system. Hence, all 11 data points are used for regulation of K086 solvent wash nonwastewater.

Next, the accuracy-corrected constituent concentrations were calculated for all selected BDAT list constituents. The arithmetic average concentration and a variability factor were determined for each BDAT for the lead and chromium data. Finally, the BDAT performance standard for lead and chromium were determined by multiplying the average accuracy-corrected total composition by the appropriate variability factor as shown in Table 6-1.

Table 6-1 Calculation of K086 Solvent Wash Nonwastewater Treatment Standards

BDAT reference no	BDAT list constituents	Approximate accuracy-corrected average concentration*	Approximate variability factor**	Treatment standard***
	Volatile Organics			
222	Acetone	0 13	2 8	0 37
223	n-Butyl alcohol	0 13	2 8	0 37
225	Ethyl acetate	0 13	2 8	0 37
226	Ethylbenzene	0 011	2 8	0 031
228	Methanol	0 13	2 8	0 37
229	Methyl isobutyl ketone	0 13	2 8	0 37
34	Methyl ethyl ketone	0 13	2 8	0 37
58	Methylene chloride	0 013	2 8	0 037
43	Toluene	0 011	2 8	0 031
45	1,1,1-Trichloroethane	0 016	2 8	0 044
47	Trichloroethylene	0 011	2 8	0 031
215-217	Xylene (total)	0 0055	2 8	0 015
	Semivolatile Organics			
70	Bis(2-ethylhexyl)phthalate	0 18	2 8	0 49
232	Cyclohexanone	0 18	2 8	0 49
87	1,2-Dichlorobenzene	0 18	2 8	0 49
121	Naphthalene	0.18	2 8	0.49
126	Nitrobenzene	0 18	2 8	0.49
	Metals			
159	Chromium (Total)	0 076	1.24	0.094
161	Lead	0 013	2 8	0 37

*Calculation for the accuracy corrected average concentration is shown in Appendix B

**Method used for calculation of the variability factor is shown in Appendix A

***Treatment Standard = (accuracy-corrected, average concentration) x (variability factor) The value for the treatment standard was rounded to two significant figures at the end of the calculation

6.2 Calculation of Treatment Standards for Wastewater Forms of K086 Solvent Wash

As defined in Section 1.0, wastewater forms of K086 solvent wash are those wastes that contain less than one percent filterable solids and less than one percent total organic carbon. The only data available to the Agency characterizing wastewater forms of K086 solvent wash is the scrubber water data generated during incineration of the K086 solvent wash.

6.2.1 Organic Treatment Standards

The data characterizing K086 solvent wash scrubber waters show nondetectable levels of the regulated organic constituents that were detected in the untreated K086 solvent wash. Therefore, the organic treatment standards will be based on the analytical detection levels. All six data points were used in development of the treatment standards. The Agency has detection levels for 10 volatiles and all 5 semivolatiles. Two volatiles, n-butyl alcohol and ethyl acetate, were not analyzed for because they were not on the list at the time of the analysis. For these volatile organics, EPA is proposing the highest volatile detection observed in the K086 scrubber water. The calculations of the wastewater organic treatment standards for K086 solvent wash are presented in Table 6-2.

6.2.2 Metal Treatment Standards

The Agency does not have any treatment performance data on treatment of K086 solvent wash scrubber waters. Therefore, the Agency is

Table 6-2 Calculation of K086 Solvent Wash Wastewater Treatment Standards

BDAT reference no.	BDAT list constituents	Approximate accuracy-corrected average concentration*	Approximate variability factor**	Treatment standard***
	Volatile Organics			
222	Acetone	0 0055	2.8	0 015
223	n-Butyl alcohol	0.011	2 8	0 031
225	Ethyl acetate	0.011	2.8	0 031
226	Ethylbenzene	0 0055	2 8	0 015
228	Methanol	0 011	2 8	0 031
229	Methyl isobutyl ketone	0 011	2 8	0 031
34	Methyl ethyl ketone	0 011	2 8	0 031
38	Methylene chloride	0 011	2 8	0 031
43	Toluene	0 010	2 8	0 029
45	1,1,1-Trichloroethane	0 011	2 8	0 031
47	Trichloroethylene	0 010	2 8	0 029
215-217	Xylene (total)	0 0055	2 8	0 015
	Semivolatile Organics			
70	Bis(2-ethylhexyl)phthalate	0 016	2.8	0 044
232	Cyclohexanone	0 0076	2 8	0 022
87	1,2-Dichlorobenzene	0.016	2 8	0 044
121	Naphthalene	0.016	2.8	0 044
126	Nitrobenzene	0.016	2.8	0 044
	Metals			
159	Chromium (Total)	0 19	1 69	0 32
161	Lead	0.013	2 8	0 037

*Calculation for the accuracy corrected average concentration is shown in Appendix B

**Method used for calculation of the variability factor is shown in Appendix A.

***Treatment Standard = (accuracy-corrected, average concentration) x (variability factor). The value for the treatment standard was rounded to two significant figures at the end of the calculation

transferring treatment data from a similar wastewater treated at Envirite. The Agency expects that the Envirite wastewaters are at least as difficult to treat as the K086 solvent wash scrubber waters since the Envirite untreated metal concentrations are higher. Accordingly, EPA believes that the level of performance achieved for lead and chromium in the wastes treated in the Envirite treatment system can be transferred for lead and chromium levels in the K086 solvent wash wastewaters. The data consist of 11 influent and effluent sample sets. All effluent data were used in development of the treatment standards. The calculations of the wastewater metal treatment standards for K086 solvent wash are presented in Table 6-2.

APPENDIX A

APPENDIX A

STATISTICAL METHODS

A.1 F Value Determination for ANOVA Test

As noted earlier in Section 1.0, EPA is using the statistical method known as analysis of variance in the determination of the level of performance that represents "best" treatment where more than one technology is demonstrated. This method provides a measure of the differences between data sets. If the differences are not statistically significant, the data sets are said to be homogeneous.

If the Agency found that the levels of performance for one or more technologies are not statistically different (i.e., the data sets are homogeneous), EPA would average the long term performance values achieved by each technology and then multiply this value by the largest variability factor associated with any of the acceptable technologies. If EPA found that one technology performs significantly better (i.e., the data sets are not homogeneous), BDAT would be the level of performance achieved by the best technology multiplied by its variability factor.

To determine whether any or all of the treatment performance data sets are homogeneous using the analysis of variance method, it is necessary to compare a calculated "F value" to what is known as a "critical value." (See Table A-1.) These critical values are available in most statistics texts (see, for example, Statistical Concepts and Methods by Bhattacharyya and Johnson, 1977, John Wiley Publications, New York).

Where the F value is less than the critical value, all treatment data sets are homogeneous. If the F value exceeds the critical value, it is

Table A-1

95th PERCENTILE VALUES FOR THE F DISTRIBUTION

n_1 = degrees of freedom for numerator

n_2 = degrees of freedom for denominator

(shaded area = .95)

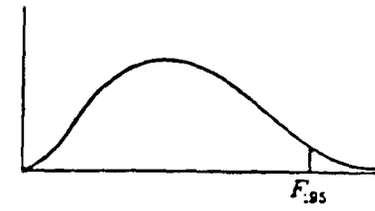

n_2 \ n_1	1	2	3	4	5	6	8	12	16	20	30	40	50	100	∞
1	161.4	199.5	215.7	224.6	230.2	234.0	238.9	243.9	246.3	248.0	250.1	251.1	252.2	253.0	254.3
2	18.51	19.00	19.16	19.25	19.30	19.33	19.37	19.41	19.43	19.45	19.46	19.46	19.47	19.49	19.50
3	10.13	9.55	9.28	9.12	9.01	8.94	8.85	8.74	8.69	8.66	8.62	8.60	8.58	8.56	8.53
4	7.71	6.94	6.59	6.39	6.26	6.16	6.04	5.91	5.84	5.80	5.75	5.71	5.70	5.66	5.63
5	6.61	5.79	5.41	5.19	5.05	4.95	4.82	4.68	4.60	4.56	4.50	4.46	4.44	4.40	4.36
6	5.99	5.14	4.76	4.53	4.39	4.28	4.15	4.00	3.92	3.87	3.81	3.77	3.75	3.71	3.67
7	5.59	4.74	4.35	4.12	3.97	3.87	3.73	3.57	3.49	3.44	3.38	3.34	3.32	3.28	3.23
8	5.32	4.46	4.07	3.84	3.69	3.58	3.44	3.28	3.20	3.15	3.08	3.05	3.03	2.98	2.93
9	5.12	4.26	3.86	3.63	3.48	3.37	3.23	3.07	2.98	2.93	2.86	2.82	2.80	2.76	2.71
10	4.96	4.10	3.71	3.48	3.33	3.22	3.07	2.91	2.82	2.77	2.70	2.67	2.64	2.59	2.54
11	4.84	3.98	3.59	3.36	3.20	3.09	2.95	2.79	2.70	2.65	2.57	2.53	2.50	2.45	2.40
12	4.75	3.89	3.49	3.26	3.11	3.00	2.85	2.69	2.60	2.54	2.46	2.42	2.40	2.35	2.30
13	4.67	3.81	3.41	3.18	3.03	2.92	2.77	2.60	2.51	2.46	2.38	2.34	2.32	2.26	2.21
14	4.60	3.74	3.34	3.11	2.96	2.85	2.70	2.53	2.44	2.39	2.31	2.27	2.24	2.19	2.13
15	4.54	3.68	3.29	3.06	2.90	2.79	2.64	2.48	2.39	2.33	2.25	2.21	2.18	2.12	2.07
16	4.49	3.63	3.24	3.01	2.85	2.74	2.59	2.42	2.33	2.28	2.20	2.16	2.13	2.07	2.01
17	4.45	3.59	3.20	2.96	2.81	2.70	2.55	2.38	2.29	2.23	2.15	2.11	2.08	2.02	1.96
18	4.41	3.55	3.16	2.93	2.77	2.66	2.51	2.34	2.25	2.19	2.11	2.07	2.04	1.98	1.92
19	4.38	3.52	3.13	2.90	2.74	2.63	2.48	2.31	2.21	2.15	2.07	2.02	2.00	1.94	1.88
20	4.35	3.49	3.10	2.87	2.71	2.60	2.45	2.28	2.18	2.12	2.04	1.99	1.96	1.90	1.84
22	4.30	3.44	3.05	2.82	2.66	2.55	2.40	2.23	2.13	2.07	1.98	1.93	1.91	1.84	1.78
24	4.26	3.40	3.01	2.78	2.62	2.51	2.36	2.18	2.09	2.03	1.94	1.89	1.86	1.80	1.73
26	4.23	3.37	2.98	2.74	2.59	2.47	2.32	2.15	2.05	1.99	1.90	1.85	1.82	1.76	1.69
28	4.20	3.34	2.95	2.71	2.56	2.45	2.29	2.12	2.02	1.96	1.87	1.81	1.78	1.72	1.65
30	4.17	3.32	2.92	2.69	2.53	2.42	2.27	2.09	1.99	1.93	1.84	1.79	1.76	1.69	1.62
40	4.08	3.23	2.84	2.61	2.45	2.34	2.18	2.00	1.90	1.84	1.74	1.69	1.66	1.59	1.51
50	4.03	3.18	2.79	2.56	2.40	2.29	2.13	1.95	1.85	1.78	1.69	1.63	1.60	1.52	1.44
60	4.00	3.15	2.76	2.53	2.37	2.25	2.10	1.92	1.81	1.75	1.65	1.59	1.56	1.48	1.39
70	3.98	3.13	2.74	2.50	2.35	2.23	2.07	1.89	1.79	1.72	1.62	1.56	1.53	1.45	1.35
80	3.96	3.11	2.72	2.48	2.33	2.21	2.05	1.88	1.77	1.70	1.60	1.54	1.51	1.42	1.32
100	3.94	3.09	2.70	2.46	2.30	2.19	2.03	1.85	1.75	1.68	1.57	1.51	1.48	1.39	1.28
150	3.91	3.06	2.67	2.43	2.27	2.16	2.00	1.82	1.71	1.64	1.54	1.47	1.44	1.34	1.22
200	3.89	3.04	2.65	2.41	2.26	2.14	1.98	1.80	1.69	1.62	1.52	1.45	1.42	1.32	1.19
400	3.86	3.02	2.62	2.39	2.23	2.12	1.96	1.78	1.67	1.60	1.49	1.42	1.38	1.28	1.13
∞	3.84	2.99	2.60	2.37	2.21	2.09	1.94	1.75	1.64	1.57	1.46	1.40	1.32	1.24	1.00

necessary to perform a "pair wise F" test to determine if any of the sets are homogeneous. The "pair wise F" test must be done for all of the various combinations of data sets using the same method and equation as the general F test.

The F value is calculated as follows:

(i) All data are natural logtransformed.

(ii) The sum of the data points for each data set is computed (T_i).

(iii) The statistical parameter known as the sum of the squares between data sets (SSB) is computed:

$$SSB = \left[\sum_{i=1}^{k} \left(\frac{T_i^2}{n_i} \right) \right] - \left(\frac{\left[\sum_{i=1}^{k} T_i \right]^2}{N} \right)$$

where:

k = number of treatment technologies
n_i = number of data points for technology i
N = number of data points for all technologies
T_i = sum of natural logtransformed data points for each technology.

(iv) The sum of the squares within data sets (SSW) is computed:

$$SSW = \left[\sum_{i=1}^{k} \sum_{j=1}^{n_i} x^2_{i,j} \right] - \sum_{i=1}^{k} \left(\frac{T_i^2}{n_i} \right)$$

where:

$x_{i,j}$ = the natural logtransformed observations (j) for treatment technology (i).

(v) The degrees of freedom corresponding to SSB and SSW are calculated. For SSB, the degree of freedom is given by k-1. For SSW, the degree of freedom is given by N-k.

(vi) Using the above parameters, the F value is calculated as follows:

$$F = \frac{MSB}{MSW}$$

where:

MSB = SSB/(k-1) and
MSW = SSW/(N-k).

A computational table summarizing the above parameters is shown below.

Computational Table for the F Value

Source	Degrees of freedom	Sum of squares	Mean square	F
Between	k-1	SSB	MSB = SSB/k-1	MSB/MSW
Within	N-k	SSW	MSW = SSW/N-k	

Below are three examples of the ANOVA calculation. The first two represent treatment by different technologies that achieve statistically similar treatment; the last example represents a case where one technology achieves significantly better treatment than the other technology.

Example 1
Methylene Chloride

Steam Stripping				Biological Treatment			
Influent (μg/l)	Effluent (μg/l)	ln(effluent)	[ln(effluent)]^2	Influent (μg/l)	Effluent (μg/l)	ln(effluent)	[ln(effluent)]^2
1550.00	10.00	2.30	5.29	1960.00	10.00	2.30	5.29
1290.00	10.00	2.30	5.29	2568.00	10.00	2.30	5.29
1640 00	10 00	2 30	5.29	1817.00	10.00	2.30	5.29
5100 00	12 00	2 48	6.15	1640 00	26.00	3.26	10 6
1450 00	10 00	2.30	5.29	3907.00	10.00	2.30	5 29
4600 00	10 00	2 30	5 29				
1760 00	10 00	2.30	5 29				
2400 00	10 00	2.30	5 29				
4800 00	10 00	2.30	5.29				
12100 00	10 00	2.30	5.29				
Sum							
-	-	23 18	53 8	-	-	12 46	31 8
Sample size							
10	10	10	-	5	5	5	-
Mean							
3669	10.2	2.32	-	2378	13.2	2.49	-
Standard Deviation							
3328 67	63	06	-	923.04	7.15	.43	-
Variability Factor							
	1 14	-	-	-	2.48	-	-

ANOVA Calculations.

$$SSB = \left[\sum_{i=1}^{k}\left(\frac{T_i^2}{n_i}\right)\right] - \frac{T^2}{N}.$$

$$SSW = \left[\sum_{i=1}^{k}\sum_{j=1}^{n_i} X_{i,j}^2\right] - \sum_{i=1}^{k}\left(\frac{T_i^2}{n_i}\right)$$

MSB = SSB/(k-1)

MSW = SSW/(N-k)

Example 1 (continued)

$F = MSB/MSW$

Where,

k = number of treatment technologies

n_i = number of data points for technology i

N = number of natural log transformed data points for all technologies

T_i = sum of log transformed data points for each technology

T = Total sum of all the natural log transformed data points for all technologies = $\sum_{i=1}^{k} T_i$

X_{ij} = the nat log transformed observations (j) for treatment technology (i)

$n_1 = 10,\ n_2 = 5,\ N = 15,\ k = 2,\ T_1 = 23.18,\ T_2 = 12.46,\ T = 35.64,\ T^2 = 1270.$

$T_1^2 = 537.3,\ T_2^2 = 155.2.$

$$SSB = \left(\frac{537.3}{10} + \frac{155.2}{5}\right) - \frac{1270}{15} = 0.1233$$

$$SSW = (53.8 + 31.8) - \left(\frac{537.3}{10} + \frac{155.3}{5}\right) = 0.7600$$

$MSB = 0.1233/1 = 0.1233$

$MSW = 0.76/13 = 0.0584$

$$F = \frac{0.1233}{0.0584} = 2.109$$

ANOVA Table

Source	Degrees of freedom	SS	MS	F
Between(B)	1	0.1233	0.1233	2.109
Within(W)	13	0.7600	0.0584	

The critical value of the F test at 0.05 significance level is 4.67. Since the F value is less than the critical value, the means are not significantly different (i.e., they are homogeneous)

Example 2
Trichloroethylene

Steam Stripping				Biological Treatment			
Influent (μg/l)	Effluent (μg/l)	ln(effluent)	[ln(effluent)]^2	Influent (μg/l)	Effluent (μg/l)	ln(effluent)	[ln(effluent)]^2
1650.00	10.00	2.30	5.29	200.00	10.00	2.30	5.29
5200.00	10.00	2.30	5.29	224.00	10.00	2.30	5.29
5000 00	10 00	2.30	5.29	134.00	10.00	2.30	5.29
1720 00	10 00	2.30	5.29	150.00	10.00	2.30	5.29
1560 00	10 00	2 30	5.29	484.00	16.25	2.79	7 78
10300 00	10 00	2.30	5.29	163.00	10.00	2.30	5.29
210 00	10 00	2 30	5.29	182.00	10.00	2.30	5.29
1600 00	27 00	3 30	10.9				
204 00	85 00	4 44	19 7				
160 00	10 00	2.30	5.29				
Sum							
-	-	26 14	72.9	-	-	16 59	39 5
Sample Size							
10	10	10	-	7	7	7	-
Mean							
2760	19 2	2.61	-	220	10.89	2.37	-
Standard Deviation							
3209 6	23 7	71	-	120.5	2.36	.18	-
Variability Factor							
-	3 76	-	-	-	1.51	-	-

ANOVA Calculations

$$SSB = \left[\sum_{i=1}^{k}\left(\frac{T_i^2}{n_i}\right)\right] - \frac{T^2}{N}$$

$$SSW = \left[\sum_{i=1}^{k}\sum_{j=1}^{n_i} X_{i,j}^2\right] - \sum_{i=1}^{k}\left(\frac{T_i^2}{n_i}\right)$$

MSB = SSB/(k-1)

MSW = SSW/(N-k)

Example 2 (continued)

$F = MSB/MSW$

Where,

k = number of treatment technologies

n_i = number of data points for technology i

N = number of data points for all technologies

T_i = sum of natural log transformed data points for each technology

T = total sum of all the natural log transformed data points for all technologies = $\sum_{i=1}^{k} T_i$

X_{ij} = the natural log transformed observations (j) for treatment technology (i)

$N_1 = 10$, $N_2 = 7$, $N = 17$, $k = 2$, $T_1 = 26.14$, $T_2 = 16.59$, $T = 42.73$, $T^2 = 1826$, $T_1^2 = 683.3$

$T_2^2 = 275.2$,

$$SSB = \left(\frac{683.3}{10} + \frac{275.2}{7}\right) - \frac{1826}{17} = 0.2325$$

$$SSW = (72.9 + 39.5) - \left(\frac{683.3}{10} + \frac{275.2}{7}\right) = 4.856$$

$MSB = 0.2325/1 = 0.2325$

$MSW = 4.856/15 = 0.3237$

$$F = \frac{0.2325}{0.3237} = 0.7183$$

ANOVA Table

Source	Degrees of freedom	SS	MS	F
Between(B)	1	0.2325	0.2325	0.7183
Within(W)	15	4.856	0.3237	

The critical value of the F test at 0.05 significance level is 4.54. Since F value is less than the critical value, the means are not significantly different (i.e., they are homogeneous)

Example 3
Chlorobenzene

Activated Sludge Followed by Carbon				Biological Treatment			
Influent (µg/l)	Effluent (µg/l)	ln(effluent)	[ln(effluent)]^2	Influent (µg/l)	Effluent (µg/l)	ln(effluent)	[ln (effluent)]^2
7200.00	80.00	4 38	19.2	9206.00	1083.00	6.99	48.9
6500 00	70.00	4.25	18.1	16646.00	709.50	6.56	43.0
6075 00	35 00	3.56	12.7	49775.00	460.00	6.13	37.6
3040 00	10 00	2.30	5.29	14731.00	142.00	4 96	24 6
				3159.00	603.00	6 40	41 0
				6756.00	153.00	5.03	25.3
				3040 00	17 00	2.83	8 01
Sum							
-	-	14 49	55.3	-	-	38 90	228 4
Sample Size							
4	4	4	-	7	7	7	-
Mean							
5703	49	3 63	-	14759	452.5	5.56	-
Standard Deviation							
1835 4	32.24	.95		16311.86	379.04	1.42	-
Variability Factor							
-	7 00	-	-	-	15.79	-	-

ANOVA Calculations

$$SSB = \left[\sum_{i=1}^{k}\left(\frac{T_i^2}{n_i}\right)\right] - \frac{T^2}{N}$$

$$SSW = \left[\sum_{i=1}^{k}\sum_{j=1}^{n_i} X_{ij}^2\right] - \sum_{i=1}^{k}\left(\frac{T_i^2}{n_i}\right)$$

MSB = SSB/(k-1)

MSW = SSW/(N-k)

F = MSB/MSW

Where,

Example 3 (continued)

k = number of treatment technologies

n_i = number of data points for technology i

N = number of data points for all technologies

T_i = sum of natural log transformed data points for each technology

T = total sum of all the natural log transformed data points for all technologies = $\sum_{i=1}^{k} T_i$

X_{ij} = the natural log transformed observations (j) for treatment technology (i)

$N_1 = 4$, $N_2 = 7$, $N = 11$, $k = 2$, $T_1 = 14.49$, $T_2 = 38.90$, $T = 53.39$, $T^2 = 2850$, $T_1^2 = 210.0$

$T_2^2 = 1513$.

$$SSB = \left(\frac{210.0}{4} + \frac{1513}{7}\right) - \frac{2850}{11} = 9.552$$

$$SSW = (55.3 + 228.4) - \left(\frac{210.0}{4} + \frac{1513}{7}\right) = 14.96$$

$MSB = 9.552/1 = 9.552$

$MSW = 14.96/9 = 1.662$

$F = 9.552/1.662 = 5.75$

ANOVA Table

Source	Degrees of freedom	SS	MS	F
Between(B)	1	9.552	9.552	5.75
Within(W)	9	14.96	1.662	

The critical value of the F test at 0.05 significance level is 5.12. Since F value is larger than the critical value, the means are significantly different (i.e., they are heterogeneous)

has been used routinely in the EPA development of numerous regulations in the Effluent Guidelines program and in the BDAT program. The variability factor (VF) was defined as the ratio of the 99th percentile (C_{99}) of the lognormal distribution to its arithmetic mean (Mean).

$$VF = \frac{C_{99}}{Mean} \tag{1}$$

The relationship between the parameters of the lognormal distribution and the parameters of the normal distribution created by taking the natural logarithms of the lognormally-distributed concentrations can be found in most mathematical statistics texts (see for example: Distribution in Statistics-Volume 1 by Johnson and Kotz, 1970). The mean of the lognormal distribution can be expressed in terms of the mean (μ) and standard deviation (σ) of the normal distribution as follows:

$$C_{99} = Exp\ (\mu + 2.33\sigma) \tag{2}$$

$$Mean = Exp\ (\mu + .5\sigma^2) \tag{3}$$

Substituting (2) and (3) in (1) the variability factor can then be expressed in terms of σ as follows:

$$VF = Exp\ (2.33\ \sigma - .5\sigma^2) \tag{4}$$

For residuals with concentrations that are not all below the detection limit, the 99th percentile and the mean can be estimated from the actual analytical data and accordingly, the variability factor (VF) can be estimated using equation (1). For residuals with concentrations that are below the detection limit the above equations can be used in conjunction with the assumptions below to develop a variability factor.

Step 1: The actual concentrations follow a lognormal distribution. The upper limit (UL) is equal to the detection limit. The lower limit (LL) is assumed to be equal to one tenth of the detection limit. This assumption is based on the fact that data from well-designed and well-operated treatment systems generally falls within one order of magnitude.

Step 2: The natural logarithms of the concentrations have a normal distribution with an upper limit equal to ln (UL) and a lower limit equal to ln (LL).

Step 3: The standard deviation (σ) of the normal distribution is approximated by

$$\sigma = [(\ln (UL) - \ln (LL)] / [(2)(2.33)] = [\ln(UL/LL)] / 4.66$$

when LL = (0.1)(UL) then $\sigma = (\ln 10) / 4.66 = 0.494$

Step 4: Substitution of the value from Step 3 in equation (4) yields the variability factor, VF.

$$VF = 2.8$$

A.2. Variability Factor

$$VF = \frac{C_{99}}{Mean}$$

where:

VF = estimate of daily maximum variability factor determined from a sample population of daily data.

C_{99} = Estimate of performance values for which 99 percent of the daily observations will be below. C_{99} is calculated using the following equation: $C_{99} = Exp(y + 2.33\ Sy)$ where y and Sy are the mean and standard deviation, respectively, of the logtransformed data.

Mean = average of the individual performance values.

EPA is establishing this figure as an instantaneous maximum because the Agency believes that on a day-to-day basis the waste should meet the applicable treatment standards. In addition, establishing this requirement makes it easier to check compliance on a single day. The 99th percentile is appropriate because it accounts for almost all process variability.

In several cases, all the results from analysis of the residuals from BDAT treatment are found at concentrations less than the detection limit. In such cases, all the actual concentration values are considered unknown and hence, cannot be used to estimate the variability factor of the analytical results. Below is a description of EPA's approach for calculating the variability factor for such cases with all concentrations below the detection limit.

It has been postulated as a general rule that a lognormal distribution adequately describes the variation among concentrations. Agency data shows that the treatment residual concentrations are distributed approximately lognormally. Therefore, the lognormal model

APPENDIX B

Appendix B

Analytical QA/QC

The analytical methods used for analysis of the regulated constituents identified in Section 5 are listed in Table B-1. SW-846 methods, (EPA's Test Methods for Evaluation Solid Waste; Physical/Chemical Methods, SW-846, Third Edition, November 1986) are used in most cases for determining total constituent concentrations. Leachate concentrations were determined using the Toxicity Characteristic Leaching Procedure (TCLP), published in 51 FR 1750, November 7, 1986.

In some instances SW-846 allows for the use of alternative or equivalent procedures or equipment. Table B-2 presents the specific procedures or equipment used in extraction of organic compounds. The specific procedures or equipment used for anlaysis of organic and metal compounds are shown in Table B-3.

As stated in the introduction, all concentrations for the regulated constituents will be corrected to account for analytical interference associated with the chemical makeup of the waste matrix. The correction factor for a constituent is based on the matrix spike recovery values. Table B-4 present the organic matrix spike recoveries used to determine the correction factor for the EPA-collected organic data for the K086 scrubber water residual. Since spikes were not performed for every organic compound, it was necessary to calculate an average recovery value for volatile organics, base/neutral semivolatile organics and acid semivolatile organics.

Since no matrix spike recovery values were available for the Envirite data, matrix spike recovery values for a similar wastewater (i.e., K061

TCLP extract) and nonwastewater (i.e., K061) matrix have been used to correct the Envirite data. The recoveries used to correct the Envirite wastewaters and TCLP extract metal concentrations are shown in Table B-5. Table B-6 presents the recoveries used to correct the Envirite filter cake organic detection limits. It was necessary to calculate average recovery values since spikes were not performed for every organic constituent.

The accuracy-corrected, average concentrations for the Envirite wastewater metal concentrations are calculated in Table B-7. Table B-8 presents the accuracy-corrected, average concentrations for the Envirite filter cake metal TCLP concentrations. The accuracy-corrected, average concentrations for the regulated organic constituents in the K086 solvent wash wastewater and filter cake residual are presented in Table B-9. In cases where all the concentrations reported are the detection limits, the highest detection limit was selected as the average concentration.

Table B-1 Analytical Methods for K086 Solvent Waste Regulated Constituents

BDAT reference number	Regulated constituent	Extraction method	Method number	Analytical method	Method number	Reference
	Volatile Organics					
222	Acetone	Purge and Trap	5030	Gas Chromatography/Mass Spectrometry	8240	1
223	n-Butyl alcohol	Purge and Trap	5030	Gas Chromatography/Mass Spectrometry	8240	1
225	Ethyl acetate	Purge and Trap	5030	Gas Chromatography/Mass Spectrometry	8240	1
226	Ethyl benzene	Purge and Trap	5030	Gas Chromatography/Mass Spectrometry	8240	1
228	Methanol	No extraction		Gas Chromatography/Mass Spectrometry	8240	1
229	Methyl isobutyl ketone	Purge and Trap	5030	Gas Chromatography/Mass Spectrometry	8240	1
34	Methyl ethyl ketone	Purge and Trap	5030	Gas Chromatography/Mass Spectrometry	8240	1
38	Methylene chloride	Purge and Trap	5030	Gas Chromatography/Mass Spectrometry	8240	1
43	Toluene	Purge and Trap	5030	Gas Chromatography/Mass Spectrometry	8240	1
45	1,1,1-Trichloroethane	Purge and Trap	5030	Gas Chromatography/Mass Spectrometry	8240	1
47	Trichloroethylene	Purge and Trap	5030	Gas Chromatography/Mass Spectrometry	8240	1
215-217	Xylene (total)	Purge and Trap	5030	Gas Chromatography/Mass Spectrometry	8240	1
	Semivolatile Organic					
70	Bis(2-ethyl hexyl)phthalate	Continuous liquid/ liquid extraction	3520	Gas Chromatography/Mass Spectrometry	8270	1
232	Cyclohexanone	Continuous liquid/ liquid extraction	3520	Gas Chromatography/Mass Spectrometry	8270	1
87	1,2-Dichlorobenzene	Continuous liquid/ liquid extraction	3520	Gas Chromatography/Mass Spectrometry	8270	1
121	Naphthalene	Continuous liquid/ liquid extraction	3520	Gas Chromatography/Mass Spectrometry	8270	1
126	Nitrobenzene	Continuous liquid/ liquid extraction	3520	Gas Chromatography/Mass Spectrometry	8270	1
	Metals					
159	Chromium (total composition)	Specified in analytical method		Chromium (atomic absorption, direct aspiration method)	7190	1
161	Lead (total composition)	Specified in analytical method		Lead (atomic absorption, direct aspiration method)	7420	1

Table B-1 (continued)

BDAT reference number	Regulated constituent	Extraction method	Method number	Analytical method	Method number	Reference
	Metals (continued)					
159	Chromium (TCLP extract)	Specified in analytical method		Toxicity Characteristic Leaching Procedure (TCLP)	51 FR 1750	2
161	Lead (TCLP extract)	Specified in analytical method		Toxicity Characteristic Leaching Procedure (TCLP)	51 FR 1750	2

References: 1 USEPA 1982
2. Federal Register 1986

Table B-2 Specific Procedures or Equipment Used in Extraction of Organic Compounds When Alternatives or Equivalents are Allowed in the SW-846 Methods

Analysis	SW-846 method	Sample aliquot	Alternatives or equivalents allowed by SW-846 methods	Specific procedures or equipment used
Purge and trap	5030	5 milliliters of liquid	• The purge and trap device to be used is specified in the method in Figure 1, the desorber to be used is described in Figures 2 and 3, and the packing materials are described in Section 4 10 2 The method allows equivalents of this equipment or materials to be used	• The purge and trap equipment and the desorber used were as specified in SW-846. The purge and trap equipment is a Teckmar LSC-2 with standard purging chambers (Supelco cat. 2-0293). The packing materials for the traps were 1/3 silica gel and 2/3 2,6-diphenylene
			• The method specifies that the trap must be at least 25 cm long and have an inside diameter of at least 0 105 cm	• The length of the trap was 30 cm nd headiameter was 0.105 cm.
			• The surrogates recommended are toluene-d8,4-bromofluorobenzene, and 1,2-dichloroethane-d4 The recommended concentration level is 50 ug/l	• The surrogates were added as specified in SW-846
Continuous liquid-liquid extraction	3520	1 liter of liquid	• Acid and base/neutral extracts are usually combined before analysis by GC/MS However, under some situations, they may be extracted and analyzed separately.	• Acid and base/neutral extracts were combined.
			• The base/neutral surrogates recommended are 2-fluorobiphenyl, nitrobenzene-d5, terphenyl d14 The acid surrogates recommended are 2-fluorophenol, 2,4,6-tribromophenol, and phenol-d6 Additional compounds	• Surrogates were the same as those recommended by SW-846, with the exception that phenol-d5 was substituted for phenol-d6 The concentrations used were the concentrations recommended in SW-846

Table B-2 (continued)

Analysis	SW-846 method	Sample aliquot	Alternatives or equivalents allowed by SW-846 methods	Specific procedures or equipment used
Continuous liquid-liquid extraction (Continued)			may be used for surrogates The recommended concentrations for low-medium concentration level samples are 100 ppm for acid surrogates and 200 ppm for base/neutral surrogates Volume of surrogate may be adjusted	
Solvent Extraction	3540		The internal standards are prepared by dissolving them in carbon disulfide and then diluting to volume so that the final solvent is 20 carbon disulfide and 80 methylene chloride The preparation of the internal standards was changed to eliminate the use of carbon disulfide The internal standards were prepared in methylene chloride only	

Reference: USEPA 1987a

Table B-3 Specific Procedures or Equipment Used for Analysis of Organic and Metal Compounds When Alternatives or Equivalents Allowed in SW-846

Analysis	SW-846 Method	Sample preparation method	Alternatives or equivalents allowed in SW-846 for equipment or in procedure		Specific equipment or procedures used	
Organic Compounds			Recommended GC/MS operating conditions:		Actual GC/MS operating conditions:	
Gas Chromatography/ Mass Spectrometry for volatile organics	8240	5030	Electron energy:	70 ev (nominal)	Electron energy.	70 ev
			Mass range	35-260 amu	Mass range	35 - 260 amu
			Scan time	To give 5 scans/peak but not to exceed 7 sec/scan	Scan time	2 5 sec/scan
			Initial column temperature	45 C	Initial column temperature:	38°C
			Initial column holding time	3 min	Initial column holding time	2 min
			Column temperature program	8°C/min	Column temperature program:	10°C/min
			Final column temperature:	200°C	Final column temperature:	225°C
			Final column holding time:	15 min	Final column holding time:	30 min or xylene elutes
			Injector temperature:	200-225°C	Injector temperature:	225°C
			Source temperature:	According to manufacturer's specification	Source temperature	manufacturer's recommended value of 100 C
			Transfer line temperature:	250-300°C	Transfer line temperature:	275°C
			Carrier gas:	Hydrogen at 50 cm/sec or helium at 30 cm/sec	Carrier gas	Helium @ 30 ml/min
					•Additional Information on Actual System Used Equipment Finnegan model 5100 GC/MS/DS system Data system: SUPERINCOS Autoquan Mode. Electron impact NBS library available Interface to MS - Jet separator	
			• The column should be 6-ft x 0 1 in. I.D. glass, packed with 1% SP-1000 on Carbopack B (60/80 mesh) or an equivalent		•The column used was an 8-ft. x 0 1 in I D glass, packed with 1% SP-1000 on Carbopack B (60/80 mesh)	
			• Samples may be analyzed by purge and trap technique or by direct injection		•The samples were analyzed using the purge and trap technique	

Table B-3 (Continued)

Analysis	SW-846 method	Sample preparation method	Alternatives or equivalents allowed in SW-846 for equipment or in procedure		Specific equipment or procedures Used	
			Recommended GC/MS operating conditions		Actual GC/MS operating conditions	
Gas Chromatography/ Mass Spectrometry for semivolatile organics: capillary column technique	8270	3520-Liquids	Mass range	35-500 amu	Mass range	35 - 500 amu
			Scan time	1 sec/scan	Scan time	1 sec/scan
			Initial column temperature:	40°C	Initial column temperature	30°C
			Initial column holding time.	4 min	Initial column holding time	4 min
			Column temperature program:	40-270°C at 10°C/min	Column temperature program	8°C/min to 275° and 10°C/min until 305°C
			Final column temperature hold	270°C (until benzo[g,h,i,]perylene has eluted)	Final column temperature hold:	305 C
					Injector temperature:	240-260°C
			Injector temperature	250-300°C	Transfer line temperature:	300 C
			Transfer line temperature	250-300°C	Source temperature	Manufacturer's recommendation (non-heated)
			Source temperature	According to manufacturer's specification		
			Injector	Grob-type, splitless	Injector	Grob-type, splitless
			Sample volume	1-2 uL	Sample volume	1 uL of sample extract
			Carrier gas	Hydrogen at 50 cm/sec or helium at 30 cm/sec	Carrier gas	Helium @ 40 cm/sec
			• The column should be 30 m by 0 25 mm I D , 1-um film thickness s licon-coated fused silica capillary column (J&W Scientific DB-5 or equivalent)		•Additional Information on Actual System Used: Equipment Finnegan model 5100 GC/MS DS system Software Package SUPERINCOS AUTOQUAN The column used was a 30 m x 0 32 mm I D RTx -5 (5% phenyl methyl silicone) FSCC	
Metals						
Inductively coupled	6010		• Operate equipment following instructions provided by instrument's manufacturer		• Equipment operated using procedures specified in the Jarrell Ash (JA) 1140 Operator's Manual	
			• For operation with organic solvents, auxilliary argon gas inlet is recommended		• Auxiliary argon gas was not required for sample matrix	

Table B-4 Matrix Spike Recoveries used to Calculate Correction Factors for K086 Solvent Wash Scrubber Water Organic Concentrations

BDAT List Constituent	Original amount found (μg/l)	Amount spiked (μg/l)	Sample		Duplicate		Accuracy correction factor**
			Amount recovered (μg/l)	Percent Recovery*	Amount recovered (μg/l)	Percent recovery*	
Volatile Organics							
1,1-Dichloroethane	ND	50	37	74	36	72	1.39
Trichloroethene	ND	50	49	98	53	106	1.02
Chlorobenzene	ND	50	50	100	53	106	1.00
Toluene	ND	50	48	96	49	98	1.04
Benzene	ND	50	42	84	42	84	1.19
Other volatile organics				90.4 (average)		93.2 (average)	1.11
Semivolatile Organics							
Base/Neutrals							
1,2,4-Trichlorobenzene	ND	100	36	36	31	31	3.23
Acenaphthene	ND	100	61	61	57	57	1.75
2,4-Dinitrotoluene	ND	100	75	75	81	81	1.33
Pyrene	ND	100	92	92	94	94	1.09
N-Nitrosodi-n-propylamine	ND	100	85	85	83	83	1.20
1,4-Dichlorobenzene	ND	100	42	42	36	36	2.78
Other base/neutral semivolatile organics				65.2 (average)		63.7 (average)	1.57
Acids							
Pentachlorophenol	ND	200	167	83	139	70	1.43
Phenol	ND	200	169	84	159	79	1.27
2-Chlorophenol	ND	200	157	79	148	74	1.35
4-Chloro-3-methyl phenol	ND	200	161	81	169	85	1.23
4-Nitrophenol	ND	200	173	87	165	83	1.20
Other acid semivolatile organics				82.8 (average)		78.2 (average)	1.28

*Percent Recovery = [(Spike Result - Original Amount)/Spike Added]

**Accuracy Correction Factor = 100/Percent Recovery (using the lowest percent recovery values)

Reference USEPA 1987a

Table B-5 Matrix Spike Recoveries Used to Calculate Correction Factors for the Envirite Wastewater and TCLP Extract Metal Concentrations

Constituent	Original sample (μg/l)	Spike added (μg/l)	Sample		Duplicate		Accuracy Correction factor**
			Spike result (μg/l)	Percent recovery*	Spike result (μg/l)	Percent recovery*	
Antimony	<21	300	275	92	276	92	1.09
Arsenic	<10	50	70	140	66	132	0.76
Barium	1,420	5,000	5,980	91	5,940	90	1.11
Beryllium	1.4	25	25	94	24	90	1.11
Cadmium	4.2	25	26	87	27	91	1.15
Chromium (hexavalent)	<10	50	53	106	54	108	0.94
Chromium (total)	<4.0	50	35	70	34	68	1.47
Copper	<4.0	125	107	86	104	83	1.20
Lead	<5.0	25	22	88	19	76	1.31
Mercury	<0.2	1.0	0.9	90	1.1	110	1.11
Nickel	203	1,000	1,140	94	1,128	93	1.08
Selenium	<25	25	12	48	<25	NC	2.08
Silver	<4.0	50	42	84	38	76	1.32
Thallium	<10	50	51	102	48	96	1.04
Zinc	2,640	10,000	12,600	100	12,400	98	1.02

*Percent recovery = [(Spike Result - Original Amount)/Spike Amount] x 100

**Accuracy Correction Factor = 100/Percent Recovery (using the lowest percent recovery values)

Reference USEPA 1987c

Table B-6 Matrix Spike Recoveries Used to Calculate Correction Factors for the Envirite Filter Cake Organic Detection Limits

Constituent	Original amount found (µg/l)	Spike added (µg/l)	Spike result (µg/l)	Percent recovery*	Accuracy correction factor**
Volatiles					
Toluene-8	ND	50	50	100	1 00
Bromofluorobenzene	ND	50	44	88	1 14
1,2-Dichloroethane	ND	50	40 5	81	1 23
Other volatile organics				89.7 (average)	1 11
Semivolatiles					
Base/neutrals					
Nitrobenzene-d5	ND	100	65	65	1 54
2-Fluorobiphenyl	ND	100	69	69	1 45
Terphenyl-d14	ND	100	71	71	1 41
Other base/neutral semivolatile organics				68 3 (average)	1 46
Acids					
Phenol-d5	ND	200	54	27	3 70
2-Fluorophenol	ND	200	0	0	-
2,4,6-Tribromophenol	ND	200	100	50	2 00
Other acid semivolatile organics				25 7 (average)	3 89

*Percent Recovery = [(Spike Result - Original Amount)/Spike Added]

**Accuracy Correction Factor = 100 Percent Recovery

Reference USEPA 1987c

Table B-7 Accuracy-Corrected Environ.te Metals Data for Treated Wastewater from Chromium Reduction, Lime Precipitation and Sludge Filtration

Constituent	Correction factor	Accuracy-corrected concentration* (mg/l) Sample Set # 1	2	3	4	5	6	7	8	9	10	11	Accuracy-corrected average concentration (mg/l)
Antimony	1 09	(No substantial treatment)											
Arsenic	0.76	(No substantial treatment)											
Barium	1.11	<1.1	<1 1	<3 9	<11	<1 1	<1 1	<1 1	<1 1	<1 1	<1.1	<1.1	<11
Beryllium	1.11	(No substantial treatment)											
Cadmium	1.15	<0.57	<0.57	<0 57	<5.7	<0 57	<0 57	<0 57	<0 57	<0.57	<0.57	<5.7	<5 7
Chromium (hexavalent)	0 94	0 010	0 179	**	0 040	0 055	**	0 114	<0 009	0 039	0 100	<0 009	0 56
Chromium (Total)	1 47	0.176	0 176	0 294	0 147	0 162	0 147	0 176	0 221	0 147	0 176	0 265	0 19
Copper	1 20	0 253	0 181	0 253	0 084	0 169	0 145	0 193	0 193	0 096	0 169	0 289	0 18
Lead	1 31	<0 013	<0.013	<0 013	<0.013	<0 013	<0 013	<0 013	<0 013	<0.013	<0 013	<0 013	<0 013
Mercury	1.11	(No substantial treatment)											
Nickel	1 08	0.355	0 355	0 355	0 355	0 333	0 355	0 430	0 387	0 355	0 355	0.419	0 37
Selenium	2 08	(No substantial treatment)											
Silver	1.33	(No substantial treatment)											
Thallium	1 04	(No substantial treatment)											
Zinc	1 02	0 128	0 117	0 143	1.653	0 128	0 097	0 117	0 133	0 061	0.071	0 102	0 25

* Accuracy-corrected concentration = (uncorrected concentration presented in Table 3-2) x (correction factor)

** Concentration could not be measured because of analytical interference

Table B-8 Accuracy-Corrected Envirite Metals Data for Filter Cake Residuals from Lime Stabilization and Sludge Filtration

BDAT list constituent	Correction factor	Accuracy-corrected concentration* (mg/l) Sample Set # 1	2	3	4	5	6	7	8	9	10	11	Accuracy-corrected average concentration (mg/l)
Arsenic	0.76	(No substantial treatment)											
Barium	1.11	0.255	0 31	0.50	<0 11	<0 83	<0 11	0 20	0 12	0 22	0 33	0 31	0 30
Cadmium	1.15	<0.023	<0.023	<0.023	<0.023	<0 023	<0 023	<0 023	<0 023	<0 023	<0.023	<0.023	<0 023
Chromium (Total)	1 47	<0.074	0 074	<0 074	0 10	<0 074	<0.074	<0 074	<0 074	<0 074	<0 074	<0 074	0 076
Lead	1.31	<0.13	<0 13	<0 13	<0 13	<0 13	<0 13	<0 13	<0 13	<0 13	<0 13	<0.13	<0 13
Mercury	1.11	(No substantial treatment)											
Selenium	2 08	(No substantial treatment)											
Silver	1.33	(No substantial treatment)											

* Accuracy-corrected concentration = (uncorrected concentration presented in Table 3-2) x (correction factor)

Table B-9 Accuracy-Corrected Organic Concentrations for Envirite Filter Cake and K086 Solvent Wash Scrubber Water

BDAT list Constituent	K086 Solvent Wash Scrubber Water		Filter Cake	
	Correction factor	Accuracy-corrected Concentration* (mg/l)	Correction factor	Accuracy-corrected concentration** (mg/l)
Volatile Organics				
Acetone	1.11	0.0055	1 11	0.13
n-Butyl alcohol	1.11	0 011	1 11	0.13
Ethyl acetate	1.11	0.011	1 11	0 13
Ethyl benzene	1.11	0 0055	1 11	0.011
Methanol	1 11	0 011	1 11	0.13
Methyl isobutyl ketone	1 11	0.011	1 11	0 13
Methyl ethyl ketone	1.11	0.011	1 11	0.13
Methylene chloride	1 11	0.011	1 11	0.13
Toluene	1 04	0.010	1 11	0.011
1,1,1-Trichloroethane	1.11	0 011	1 11	0 016
Trichloroethylene	1.02	0 010	1 11	0.011
Xylene (total)	1 11	0 011	1 11	0 0055
Semivolatile Organic				
Bis(2-ethyl hexyl)phthalate	1 57	0 016	1 46	0 18
Cyclohexanone	1 57	0.0078	1 46	0 18
1,2-Dichlorobenzene	1 57	0 016	1.46	0 18
Naphthalene	1.57	0 016	1 46	0.18
Nitrobenzene	1.57	0.016	1 46	0 18

*Accuracy-corrected concentration = (highest detection limit present in Table 3-1) x (correction factor)

**Accuracy-corrected concentration = (highest detection limit present in Table 3-1) x (correction factor)

APPENDIX C

Appendix C

Detection Limits for the K086 Scrubber Water Samples

The detection limits for the analyses of the K086 solvent wash samples have been classified as confidential by the generator. The detection limits for analyses of the scrubber effluent water samples are listed on Table C-1.

Table C-1 Detection Limits for the Scrubber Effluent Water Samples

BDAT reference no	Constituents (units)	Scrubber effluent water sample #1 detection limits	Scrubber effluent water sample #2, #3, #4 #5, and #6 detection limits
	BDAT Volatile Organics (mg/l)		
222	Acetone	0 005	0 005
1	Acetonitrile	0 200	0 100
2	Acrolein	0 200	0 100
3	Acrylonitrile	0 200	0 100
4	Benzene	0 010	0 005
5	Bromodichloromethane	0 010	0 005
6	Bromomethane	0 020	0 010
223	n-Butyl alcohol	NL	NL
7	Carbon tetrachloride	0 010	0 005
8	Carbon disulfide	0 010	0 005
9	Chlorobenzene	0 010	0 005
10	2-Chloro-1,3-butadiene	0 200	0 100
11	Chlorodibromomethane	0 010	0 005
12	Chloroethane	0 020	0 010
13	2-Chloroethyl vinyl ether	0 020	0 010
14	Chloroform	0 010	0 005
15	Chloromethane	0 020	0 010
16	3-Chloropropene	0 200	0.100
17	1,2-Dibromo-3-chloropropane	0 020	0.010
18	1,2-Dibromoethane	0 010	0 005
19	Dibromomethane	0.010	0.005
20	Trans-1,4-dichloro-2-butene	0 200	0 100
21	Dichlorodifluoromethane	0.020	0.010
22	1,1-Dichloroethane	0 010	0.005
23	1,2-Dichloroethane	0 010	0.005
24	1,1-Dichloroethylene	0 010	0 005
25	Trans-1,2-dichloroethene	0.010	0.005
26	1,2-Dichloropropane	0 010	0 005
27	Trans-1,3-dichloropropene	0.010	0.005
28	cis-1,3-Dichloropropene	0.010	0.005
29	1,4-Dioxane	0 400	0 200
224	2-Ethoxyethanol	NL	NL
225	Ethyl acetate	NL	NL
226	Ethylbenzene	0 005	0 005
30	Ethyl cyanide	0 200	0.100
227	Ethyl ether	NL	NL
31	Ethyl methacrylate	0.200	0 100
214	Ethylene oxide	NL	NL
32	Iodomethane	0.100	0.050
33	Isobutyl alcohol	0 400	0 200
228	Methanol	NL	NL
34	Methyl ethyl ketone	0.010	0 010
229	Methyl isobutyl ketone	0.010	0.010
35	Methyl methacrylate	0.200	0 100

Table C-1 (continued)

BDAT reference no	Constituents (units)	Scrubber effluent water sample #1 detection limits	Scrubber effluent water sample #2, #3, #4, #5, and #6 detection limits
	BDAT Volatile Organics (mg/l) (continued)		
36	Methyl methanesulfonate	0.400	0.200
37	Methylacrylonitrile	0.100	0.100
38	Methylene chloride	0.010	0.005
230	2-Nitropropane	NL	NL
39	Pyridine	0.800	0.400
40	1,1,1,2-Tetrachloroethane	0.010	0.005
41	1,1,2,2-Tetrachloroethane	0.010	0.005
42	Tetrachloroethene	0.010	0.005
43	Toluene	0.010	0.005
44	Tribromomethane	0.010	0.005
45	1,1,1-Trichloroethane	0.010	0.005
47	1,1,2-Trichloroethane	0.010	0.005
48	Trichloroethene	0.010	0.005
49	Trichloromonofluoromethane	0.010	0.005
231	1,1,2-trichloro-1,2,2-trifluoroethane	NL	NL
50	1,2,3-Trichloropropane	0.010	0.005
	Vinyl chloride	0.020	0.010
215	1,2-Xylene	0.005	0.005
216	1,3-Xylene	0.005	0.005
217	1,4-Xylene	0.005	0.005

Table C-1 (continued)

BDAT reference no	Constituents (units)	Scrubber effluent water (all samples) detection limits
	BDAT Semivolatile Organics (mg/l)	
51	Acenaphthalene	0 010
52	Acenaphthene	0 010
53	Acetophenone	0 010
54	2-Acetylaminofluorene	1 000
55	4-Aminobiphenyl	0 200
56	Aniline	0 020
57	Anthracene	0 010
58	Aramite	NA
59	Benz(a)anthracene	0 010
218	Benzal chloride	NL
60	Benzenethiol	NA
61	Benzidine	1 000
62	Benzo(a)pyrene	0 010
63	Benzo(b)fluoranthene	0 010
64	Benzo(ghi)perylene	0 010
65	Benzo(k)fluoranthene	0 010
66	p-Benzoquinone	NA
67	Bis(2-chloroethoxy)ethane	0.010
68	Bis(2-chloroethyl)ether	0.010
69	Bis(2-chloroisopropyl)ether	0 010
70	Bis(2-ethylhexyl)phthalate	0 010
71	4-Bromophenyl phenyl ether	0.010
72	Butyl benzyl phthalate	0.010
73	2-sec-Butyl-4,6-dinitrophenol	0.100
74	p-Chloroaniline	0 100
75	Chlorobenzilate	NA
76	p-Chloro-m-cresol	0.010
77	2-Chloronaphthalene	0.010
78	2-Chlorophenol	0 010
79	3-Chloropropionitrile	NA
80	Chrysene	0 010
81	ortho-Cresol	0 010
82	para-Cresol	0 010
232	Cyclohexanone	0 005

NA = Not available

Table C-1 (continued)

BDAT reference no	Constituents (units)	Scrubber effluent water (all samples) detection limits
	BDAT Semivolatile Organics (mg/l) (continued)	
83	Dibenz(a,h)anthracene	0.010
84	Dibenzo(a,e)pyrene	NA
85	Dibenzo(a,i)pyrene	0 050
86	m-Dichlorobenzene	0 010
87	o-Dichlorobenzene	0 010
88	p-Dichlorobenzene	0 010
89	3,3'-Dichlorobenzidine	0 020
90	2,4-Dichlorophenol	0 010
91	2,6-Dichlorophenol	NA
92	Diethyl phthalate	0 010
93	3,3'-Dimethoxybenzidine	10 000
94	p-Dimethylaminoazobenzene	0.200
95	3,3'-Dimethylbenzidine	NA
96	2,4-Dimethylphenol	0 010
97	Dimethyl phthalate	0 010
98	Di-n-butyl phthalate	0 010
99	1,4-Dinitrobenzene	0 100
100	4,6-Dinitro-o-cresol	0 050
101	2,4-Dinitrophenol	0 050
102	2,4-Dinitrotoluene	0 010
103	2,6-Dinitrotoluene	0 010
104	Di-n-octyl phthalate	0 010
105	Di-n-propylnitrosamine	0.010
106	Diphenylamine	
219	Diphenylnitrosamine	0 010
107	1,2-Diphenylhydrazine	0 010
108	Fluoranthene	0.010
109	Fluorene	0.010
110	Hexachlorobenzene	0.010
111	Hexachlorobutadiene	0.010
112	Hexachlorocyclopentadiene	0 010
113	Hexachloroethane	0 010
114	Hexachlorophene	NA

NA = Not available

Table C 1 (continued)

BDAT reference no	Constituents (units)	Scrubber effluent water (all samples) detection limits
	BDAT Semivolatile Organics (mg/l) (continued)	
115	Hexachloropropene	NA
116	Indeno(1,2,3-cd)pyrene	0 010
117	Isosafrole	0 100
118	Methapyrilene	NA
119	3-Methylcholanthrene	0 100
120	4,4'-Methylenebis (2-chloroaniline)	0 200
121	Naphthalene	0 010
122	1,4-Naphthoquinone	NA
123	1-Naphthylamine	0 100
124	2-Naphthylamine	0 100
125	p-Nitroaniline	0 050
126	Nitrobenzene	0 010
127	4-Nitrophenol	0 050
128	N-Nitrosodi-n-butylamine	NA
129	N-Nitrosodiethylamine	NA
130	N-Nitrosodimethylamine	0 100
131	N-Nitrosomethylethylamine	0 100
132	N-Nitrosomorpholine	0 200
133	N-Nitrosopiperidine	0.200
134	n-Nitrosopyrrolidine	0.200
135	5-Nitro-o-toluidine	0 200
136	Pentachlorobenzene	NA
137	Pentachloroethane	NA
138	Pentachloronitrobenzene	0.100
139	Pentachlorophenol	0.050
140	Phenacetin	0.100
141	Phenanthrene	0.010
142	Phenol	0 010
220	Phthalic anhydride	NL
143	2-Picoline	0 100
144	Pronamide	NA
145	Pyrene	0 010
146	Resorcinol	NA

NA = Not available

Table C 1 (continued)

BDAT reference no.	Constituents (units)	Scrubber effluent water (all samples) detection limits
	BDAT Semivolatile Organics (mg/l) (continued)	
147	Safrole	0 100
148	1,2,4,5-Tetrachlorobenzene	0 010
149	2,3,4,6-Tetrachlorophenol	NA
150	1,2,4-Trichlorobenzene	0 010
151	2,4,5-Trichlorophenol	0 050
152	2,4,6-Trichlorophenol	0 010
153	Tris(2,3-dibromopropyl) phosphate	NA
	BDAT Metals (mg/l)	
154	Antimony	0 032
155	Arsenic	0 010
156	Barium	0 001
157	Beryllium	0 001
158	Cadmium	0 004
159	Chromium (total)	0.007
221	Chromium (hexavalent)	0 010
160	Copper	0 006
161	Lead	0 005
162	Mercury	0 0002
163	Nickel	0 011
164	Selenium	0 005
165	Silver	0 006
166	Thallium	0 010
167	Vanadium	0 006
168	Zinc	0 002
	BDAT Inorganics (mg/l)	
169	Cyanide	0 010
170	Fluoride	0 2
171	Sulfide	0 5

NA = Not available

Table C 1 (continued)

BDAT reference no	Constituents (units)	Scrubber effluent water (all samples) detection limits
	BDAT PCBs (mg/l)	
200	Aroclor 1016	0 0015
201	Aroclor 1221	0 0015
202	Aroclor 1232	0 0015
203	Aroclor 1242	0 0015
204	Aroclor 1248	0 0015
205	Aroclor 1254	0 0015
206	Aroclor 1260	0 0015
	BDAT Dioxins/Furans (mg/l)	
207	Hexachlorodibenzo-p-dioxins	0 1
208	Hexachlorodibenzofuran	0 04
209	Pentachlorodibenzo-p-dioxins	0 11
210	Pentachlorodibenzofuran	0 05
211	Tetrachlorodibenzo-p-dioxins	0 1
212	Tetrachlorodibenzofuran	0 04
213	2,3,7,8-Tetrachlorodibenzo-p-dioxin	0 13
	Other Analyses (mg/l)	
	Iron	0 006
	Magnesium	0.001
	Manganese	0 003
	Titanium	0 003
	Chloride	1 000
	Total solids	1 000
	Total organic carbon	1.000
	Total organic halides	0 010

Reference USEPA 1987a

APPENDIX D

Appendix D

METHOD OF MEASUREMENT FOR THERMAL CONDUCTIVITY

The comparative method of measuring thermal conductivity has been proposed as an ASTM test method under the name "Guarded, Comparative, Longitudinal Heat Flow Technique." A thermal heat flow circuit is used which is the analog of an electrical circuit with resistances in series. A reference material is chosen to have a thermal conductivity close to that estimated for the sample. Reference standards (also known as heat meters) having the same cross-sectional dimensions as the sample are placed above and below the sample. An upper heater, a lower heater, and a heat sink are added to the "stack" to complete the heat flow circuit. See Figure 1.

The temperature gradients (analogous to potential differences) along the stack are measured with type K (chromel/alumel) thermocouples placed at known separations. The thermocouples are placed into holes or grooves in the references and also in the sample whenever the sample is thick enough to accommodate them.

For molten samples, pastes, greases, and other materials that must be contained, the material is placed into a cell consisting of a top and bottom of Pyrex 7740 and a containment ring of marinite. The sample is 2 inch in diameter and .5 inch thick. Thermocouples are not placed into the sample but rather the temperatures measured in the Pyrex are extrapolated to give the temperature at the top and bottom surfaces of the sample material. The Pyrex disks also serve as the thermal conductivity reference material.

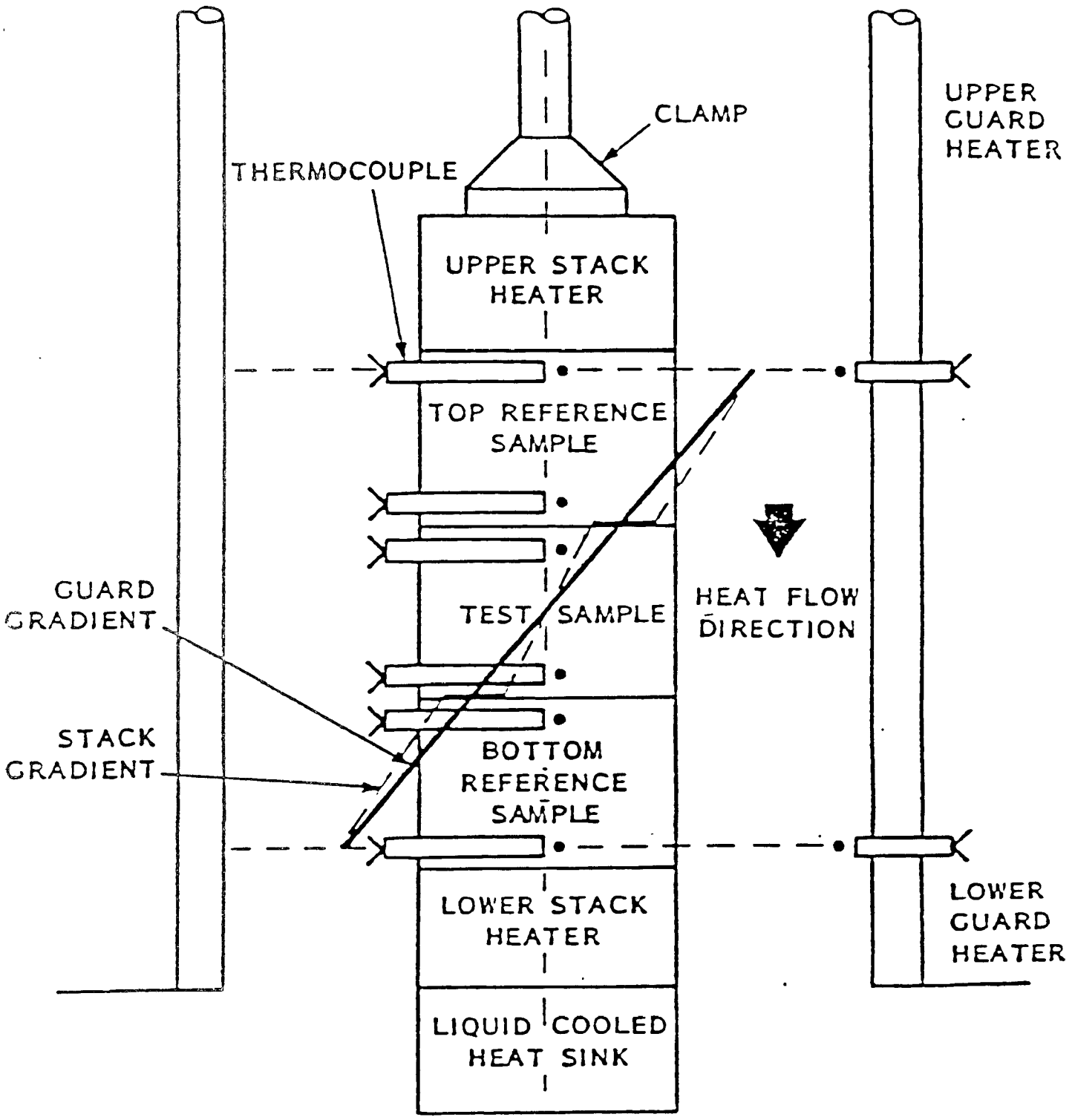

Figure 1.

SCHEMATIC DIAGRAM OF THE COMPARATIVE METHOD

The stack is clamped with a reproducible load to ensure intimate contact between the components. In order to produce a linear flow of heat down the stack and reduce the amount of heat that flows radially, a guard tube is placed around the stack and the intervening space is filled with insulating grains or powder. The temperature gradient in the guard is matched to that in the stack to further reduce radial heat flow.

The comparative method is a steady state method of measuring thermal conductivity. When equilibrium is reached the heat flux (analogous to current flow) down the stack can be determined from the references. The heat into the sample is given by

$$Q_{in} = \lambda_{top}(dT/dx)_{top}$$

and the heat out of the sample is given by

$$Q_{out} = \lambda_{bottom}(dT/dx)_{bottom}$$

where

$$\lambda = \text{thermal conductivity}$$

$$dT/dx = \text{temperature gradient}$$

and top refers to the upper reference while bottom refers to the lower reference. If the heat were confined to flow just down the stack, then Q_{in} and Q_{out} would be equal. If Q_{in} and Q_{out} are in reasonable agreement, the average heat flow is calculated from

$$Q = (Q_{in} + Q_{out})/2$$

The sample thermal conductivity is then found from

$$\lambda_{sample} = Q/(dT/dx)_{sample}$$

APPENDIX E

APPENDIX E

Organic Detection Limits for K086 Solvent Wash Nonwastewaters

Since the Agency does not have treatment data for K086 solvent wash scrubber waters, organic detection limits for the filter cake generated specifically from chromium reduction followed by chemical precipitation and sludge filtration of the K086 solvent wash scrubber waters are not available. However, EPA does have organic detection limits for wastes that the Agency believes are sufficiently similar to K086 solvent wash filtered precipitate.

The data consist of organic detection limits for 15 chemically precipitated wastes. These data are shown in Table E-1. The highest detection limit has been selected as the level for each regulated organic constituent. In the cases of n-butyl alcohol, ethyl acetate, methanol, methyl isobutyl ketone, methyl ethyl ketone, bis(2-ethylhexyl)phthalate, cyclohexanone, 1,2-dichlorobenzene, naphthalene, and nitrobenzene where no detection limits were reported, the overall highest level of detection (i.e, 120 ug/l) has been selected as the detection limit for those constituents.

Table E-1 Organic Detection Limits for Envirite Filter Cake Residuals from Lime Stabilization and Sludge Filtration

BDAT list constituent	Total concentration (ug/l) Sample Set # 1	2	3	4	5	6	7	8	9	10	11	12	13	14	15	Determined level of detection (ug/l)
Volatile organics																
Acetone	-	-	-	-	-	79	-	-	-	-	84	-	120	120	120	120
n-Butyl alcohol	-	-	-	-	-	-	-	-	-	-	-	-	-	-	-	120
Ethyl acetate	-	-	-	-	-	-	-	-	-	-	-	-	-	-	-	120
Ethyl benzene	-	-	-	3.2	-	-	-	-	-	10	3.4	-	4.9	-	4.8	10
Methanol	-	-	-	-	-	-	-	-	-	-	-		-	-	-	120
Methyl isobutyl ketone	-	-	-	-	-	-	-	-	-		-		-	-	-	120
Methyl ethyl ketone	-	-	-	-	-	-	-	-	-	-	-	-	-	-	-	120
Methylene chloride	8.6	8.9	7.1	7.9	8.2	-	-	7.9	8.3	10	8.4	6.3	12	12	12	12
Toluene	-	-	2.8	3.2	3.3	-	-	-	-	10	3.4	-	4.9	-	4.6	10
1,1,1-Trichloroethane	-	-	14	3.2	-	-	-	-	-	10	3.4	-	4.9	-	-	14
Trichloroethylene	3.4	-	2.8	3.2	3.3	3.2	-	-	-	10	-		4.9	4.9	4.6	10
Xylene (total)	-	-	-	3.2	-	-	-	-	-		-		4.9	-	-	4.9
Semivolatile organics																
Bis(2-ethylhexyl)phthalate	-	-	-	-	-	-	-	-	-	-	-		-	-	-	120
Cyclohexanone	-	-	-	-	-	-	-	-	-	-	-	-	-	-	-	120
1,2-Dichlorobenzene	-	-	-	-	-	-	-	-	-		-	-	-	-	-	120
Naphthalene	-	-	-	-	-	-	-	-	-	-	-		-	-	-	120
Nitrobenzene	-	-	-	-	-	-	-	-	-	-	-	-	-	-	-	120

- = No detection limit reported

Reference USEPA 1986a

REFERENCES

Ackerman D.G., McGaughey J.F., Wagoner D.E., "At Sea Incineration of PCB-Containing Wastes on Board the M/T Vulcanus," USEPA, 600/7-83-024, April 1983.

Ajax Floor Products Corp. n.d. Product literature: technical data sheets, Hazardous Waste Disposal System. P.O. Box 161, Great Meadows, N.J. 07838.

Aldrich, James R. 1985. "Effects of pH and proportioning of ferrous and sulfide reduction chemicals on electroplating waste treatment sludge production." In Proceeding of the 39th Purdue Industrial Waste Conference, May 8, 9, 10, 1984. Stoneham, MA: Butterworth Publishers.

Austin, G.T. 1984. Shreve's chemical process industries, 5th ed. New York: McGraw-Hill

Bishop, P.L., Ransom, S.B., and Grass, D.L. 1983. Fixation Mechanisms in Solidification/Stabilization of Inorganic Hazardous Wastes. In Proceedings of the 38th Industrial Waste Conference, 10-12 May 1983, at Purdue University, West Lafayette, Indiana.

Bonner T.A., et al., Engineering Handbook for Hazardous Waste Incineration. SW-889. Prepared by Monsanto Research Corporation for U.S. EPA NTIS PB 81-248163. June 1981.

Castaldini C., et al., Disposal of Hazardous Wastes in Industrial Boilers on Furnaces, Noyes Publications, New Jersey, 1986.

Center for Metals Production, Electric arc furnace dust-disposal, recycle and recovery, Pittsburgh, PA; May 1985.

Cherry, Kenneth F. 1982. Plating Waste Treatment. Ann Arbor, MI; Ann Arbor Science, Inc. pp 45-67.

Cushnie, George C., Jr. 1984. Removal of Metals from Wastewater: Neutralization and Precipitation. Park Ridge, NJ; Noyes Publications. pp 55-97.

Conner, J.R. 1986. Fixation and Solidification of Wastes. Chemical Engineering. Nov. 10, 1986.

Cullinane, M.J., Jr., Jones, L. W.., and Malone, P.G. 1986. Handbook for stabilization/solidification of hazardous waste. U.S. Army Engineer Waterways Experiment Station. EPA report No. 540/2-86/001. Cincinnati, Ohio: U.S. Environmental Protection Agency.

Cushnie, George C., Jr. 1985. Electroplating Wastewater Pollution Control Technology. Park Ridge, NJ; Noyes Publications. pp 48-62, 84-90.

Duby, Paul. 1980. Extractive Metallurgy, In Kirk-Othmer Encyclopedia of Chemical Technology. Vol. 9, p. 741.

Eckenfelder, W.W. 1985. Wastewater Treatment. Chemical Engineering, 85:72.

Electric Power Research Institute. 1980. FGD Sludge Disposal Manual, 2nd ed. Prepared by Michael Baker, Jr., Inc. EPRI CS-1515 Project 1685-1 Palo Alto, California: Electric Power Research Institute.

Federal Register. 1986. Hazardous Waste Management Systems; Land Disposal Restrictions; Final Rule; Appendix I to Part 268 - Toxicity Leaching Procedure (TCLP). Vol. 51, No. 216. November 7, 1986 pp. 40643-40654.

Grain, Richard W. 1981. Solids Removal and Concentration. In Third Conference on Advanced Pollution Control for the Metal Finishing Industry. Cincinnati, Ohio: U.S. Environmental Protection Agency. pp. 56-62.

Gurnham, C.F. 1955. Principles of Industrial Waste Treatment. New York; John Wiley and Sons. pp 224-234.

Kirk-Othmer. 1980. Encyclopedia of Chemical Technology, 3rd ed., Flocculation, Vol. 10. New York; John Wiley and Sons. pp 489-516.

Lanouette, Kenneth H. 1977. Heavy Metals Removal. Chemical Engineering, October 17, 1977, pp. 73-80.

Lloyd, Thomas, and Showak, Walter, 1980. Zinc and Zinc Alloys. In Kirk-Othmer encyclopedia of Chemical Technology, 3rd. ed. Vol. 24, p. 824.

Lloyd, Thomas. 1980. Zinc compounds. Kirk-Othmer Encyclopedia of Chemical Technology, 3rd. ed. Vol. 24, p. 856.

Maczek, Helmut and Kola, Rolf, 1980. Recovery of Zinc and Lead from electric furnace steelmaking dust at Berzelius. Journal of Metals. 32:53-58.

Mishuck, E. Taylor, D.R., Telles, R. and Lubowitz, H. 1984. Encapsulation/Fixation (E/F) Mechanisms. Report No. DRXTH-TE-CR-84298. Prepared by S-Cubed under Contract No. DAAK11-81-C-0164.

Mitre Corp. Guidance Manual for Hazardous Waste Incinerator Permits. NTIS PB84-100577. July 1983.

Novak R.G., Troxler W.L., Dehnke T.H., "Recovering Energy from Hazardous Waste Incineration," Chemical Engineering Progress 91:146 (1984).

Oppelt ET. "Incineration of Hazardous Waste"; JAPCA; Volume 37, No. 5; May 1987.

Patterson, James W. 1985. Industrial Wastewater Treatment Technology, 2nd Ed. Butterworth Publishers; Stoneham, MA.

Perry, Robert H. and Chilton, Cecil H. 1973. Chemical Engineers' Handbook. Fifth Edition. New York: McGraw Hill, Inc., Section 19.

Pojasek RB. 1979. Solid-Waste Disposal: Solidification, Chemical Engineering 86(17): 141-145.

Price, Laurence. Tensions Mount in EAF dust Bowl. Metal Producing. February 1986.

Rudolfs, William. 1953. Industrial Wastes. Their Disposal and Treatment. L.E.C. Publishers Inc., Valley Stream, NY. p. 294

Sanderson. 1971. Chemical Bonds and Bond Energy. Vol. 21 in Physical Chemistry. New York: Academic Press.

Santoleri J.J., Energy Recovery A By-Product of Hazardous Waste Incineration Systems, in Proceedings of the 15th Mid-Atlantic Industrial Waste Conference on Toxic and Hazardous Waste, 1983.

U.S. Department of Commerce, 1982 Census of Manufacturers - Miscellaneous Chemical Products. December 1984.

USEPA. 1979. Effluent Guidelines Division. Development Document for Proposed Effluent Limitations Guidelines and Standards for the Ink Formulation Point Source Category. EPA No. 440/1-79/090-b.

USEPA. 1980. U.S. Environmental Protection Agency. RCRA Listing Background Document Waste Code K086.

USEPA. 1980a. U.S. Environmental Protection Agency. U.S. Army Engineer Waterways Experiment Station. Guide to the Disposal of Chemically Stabilized and Solidified Waste. Prepared for MERL/ORD under Interagency Agreement No. EPA-IAG-D4-0569. PB81-181505. Cincinnati, Ohio.

USEPA. 1983. Treatability Manual, Volume III, Technology for Control/Removal of Pollutants. EPA-600/2-82-001C, January 1983. pp 111.3.1.3-2.

USEPA. 1985. Characterization of Waste Streams Listed in 40 CFR; Section 261, Waste Profiles. Prepared for the Waste Identification Branch, Characterization and Assessment Division, U.S. EPA. Prepared by Environ Corporation, Washington, D.C. 1985.

USEPA. 1986a. Onsite Engineering Report of Treatment Technology Performance and Operation for Envirite Corporation. York, Pennsylvania. Washington, D.C.: U.S. Environmental Protection Agency.

USEPA. 1986b. Test Methods for Evaluating Solid Waste; Physical/ Chemical Methods. Third Edition. U.S. EPA. Office of Solid Waste and Emergency Response. November 1986.

USEPA, 1986c. Best Demonstrated Available Technology (BDAT) Background Document for F001-F005 Spent Solvents, Volume 1, EPA/530-SW-86-056, November 1986.

USEPA. 1987a. Onsite Engineering Report of Treatment Technology Performance and Operation for Incineration of K086 Solvent Wash Waste at the Combustion Research Facility. CBI Draft Report. November 16, 1987

USEPA. 1987b. Onsite Engineering Report of Treatment Technology Performance and Operation for Safety-Kleen Corporation, Hebron, Ohio. CBI Draft Report. Washington, D.C.: U.S. Environmental Protection Agency.

USEPA. 1987c. Onsite Engineering Report for Horsehead Resource Development Co., Inc. Palmerton, Pennsylvania, for K061. Washington, D.C.: U.S. Environmental Protection Agency.

USEPA. 1988a. Onsite Engineering Report for Waterways Experiment Station, Vicksburg, Mississippi for K048 and K051.

USEPA. 1988b. Onsite Engineering Report for Waterways Experiment Station, Vicksburg, Mississippi for K061.

USEPA. 1988c. Onsite Engineering Report of Treatment Technology Performance and Operation for Shell Oil (Dear Park Manufacturing Complex), Deer Park, Texas. Draft Report. November 18, 1987.

Versar. 1984. Estimating PMN Incineration Results (Draft). U.S. Environmental Protection Agency, Exposure Evaluation Division, Office of Toxic Substances, Washington, DC. EPA Contract No. 68-01-6271, Task No. 66.

Vogel G, et al. 1986. Incineration and Cement Kiln Capacity for Hazardous Waste Treatment," in Proceedings of the 12th Annual Research Symposium. Incineration and Treatment of Hazardous Wastes. Cincinnati, Ohio. April 1986.