United States
Environmental Protection
Agency

Office of
Solid Waste
Washington, D.C 20460

EPA/530-SW-88-0009-c
April 1988

Solid Waste

EPA

Proposed

Best Demonstrated Available Technology (BDAT) Background Document for Petroleum Refining Treatability Group (K048, K049, K050, K051, K052)

Volume 3

BEST DEMONSTRATED AND AVAILABLE TECHNOLOGY (BDAT)

BACKGROUND DOCUMENT

SUPPORTING THE PROPOSED

LAND DISPOSAL RESTRICTIONS RULE

FOR

FIRST THIRD WASTES

VOLUME 3

PETROLEUM REFINING WASTE CODES

K048, K049, K050, K051, K052

U.S. Environmental Protection Agency
Office of Solid Waste
401 M Street, S.W.
Washington, D.C. 20460

James R. Berlow, Chief
Treatment Technology Section

March 18, 1988

U.S. Environmental Protection Agency
Region 5, Library (PL-12J)
77 West Jackson Boulevard, 12th Floor
Chicago, IL 60604-3590

TABLE OF CONTENTS

Section		Page
	EXECUTIVE SUMMARY	i
1.0	INTRODUCTION	1-1
	1.1 Legal Background	1-1
	1.1.1 Requirements Under HSWA	1-1
	1.1.2 Schedule for Developing Restrictions	1-4
	1.2 Summary of Promulgated BDAT Methodology	1-5
	1.2.1 Waste Treatability Groups	1-7
	1.2.2 Demonstrated and Available Treatment Technologies	1-7
	(1) Proprietary or Patented Processes	1-10
	(2) Substantial Treatment	1-10
	1.2.3 Collection of Performance Data	1-11
	(1) Identification of Facilities for Site Visits	1-12
	(2) Engineering Site Visit	1-14
	(3) Sampling and Analysis Plan	1-14
	(4) Sampling Visit	1-16
	(5) Onsite Engineering Report	1-17
	1.2.4 Hazardous Constituents Considered and Selected for Regulation	1-17
	(1) Development of BDAT List	1-17
	(2) Constituent Selection Analysis	1-27
	(3) Calculation of Standards	1-29
	1.2.5 Compliance with Performance Standards	1-30
	1.2.6 Identification of BDAT	1-32
	(1) Screening of Treatment Data	1-32
	(2) Comparison of Treatment Data	1-33
	(3) Quality Assurance/Quality Control	1-34
	1.2.7 BDAT Treatment Standards for "Derived From" and "Mixed" Wastes	1-36
	(1) Wastes from Treatment Trains Generating Multiple Residues	1-36
	(2) Mixtures and Other Derived From Residues	1-37
	(3) Residues from Managing Listed Wastes or that Contain Listed Wastes	1-38
	1.2.8 Transfer of Treatment Standards	1-40
	1.3 Variance from the BDAT Treatment Standard	1-41

TABLE OF CONTENTS (Continued)

Section		Page
2.0	INDUSTRY AFFECTED AND WASTE CHARACTERIZATION	2-1
	2.1 Industry Affected and Process Description	2-2
	2.2 Waste Characterization	2-14
	2.3 Determination of Waste Treatability Group	2-14
3.0	APPLICABLE/DEMONSTRATED TREATMENT TECHNOLOGIES	3-1
	3.1 Applicable Treatment Technologies	3-1
	3.2 Demonstrated Treatment Technologies	3-2
	3.3 Available Treatment Technologies	3-12
	3.4 Detailed Description of Treatment Technologies	3-12
	3.4.1 Incineration	3-13
	3.4.2 Solvent Extraction	3-40
	3.4.3 Sludge Filtration	3-50
	3.4.4 Stabilization of Metals	3-56
	3.4.5 Hexavalent Chromium Reduction	3-65
	3.4.6 Chemical Precipitation	3-72
4.0	IDENTIFICATION OF BEST DEMONSTRATED AND AVAILABLE TECHNOLOGY	4-1
	4.1 Review of Performance Data	4-2
	4.2 Accuracy Correction of Performance Data	4-4
	4.2.1 Nonwastewaters	4-5
	4.2.2 Wastewaters	4-9
	4.3 Statistical Comparison of Performance Data	4-10
	4.4 BDAT for K048-K052 Wastes	4-12
5.0	SELECTION OF REGULATED CONSTITUENTS	5-1
	5.1 BDAT List Constituents Detected in the Untreated Waste	5-2
	5.2 Constituents Detected in Untreated Waste But Not Considered for Regulation	5-4
	5.3 Constituents Selected for Regulation	5-7
	5.3.1 Selection of Regulated Constituents in Nonwastewater	5-7
	5.3.2 Selection of Regulated Constituents in Wastewater	5-13

TABLE OF CONTENTS (Continued)

Section		Page
6.0	CALCULATION OF TREATMENT STANDARDS	6-1
	6.1 Calculation of Treatment Standards for Nonwastewater Forms of K048-K052	6-3
	6.2 Calculation of Treatment Standards for Wastewater Forms of K048-K052	6-8
7.0	CONCLUSIONS	7-1
8.0	REFERENCES	8-1
APPENDICES		
A.1	F VALUE DETERMINATION FOR ANOVA TEST	A-1
A.2	VARIABILITY FACTOR	A-2
B	MAJOR CONSTITUENT CONCENTRATION CALCULATIONS FOR K048-K052	B-1
C	SUMMARY OF PETROLEUM REFINERY PLANT CODES	C-1
D	ANALTICAL QA/QC	D-1
E	STRIP CHARTS FOR THE SAMPLING EPISODE AT PLANT A, PRESSURE DIFFERENTIALS AND INCINERATION TEMPERATURES	E-1
F	OTHER TREATMENT DATA	F-1
G	ANALYSIS OF VARIANCE RESULTS	G-1
H	DETECTION LIMITS FOR UNTREATED WASTES	H-1
I	WASTE CHARACTERISTICS AFFECTING PERFORMANCE	I-1

LIST OF TABLES

Table		Page
1-1	BDAT CONSTITUENT LIST	1-18
2-1	FACILITIES PRODUCING K048-K052 WASTES BY STATE	2-3
2-2	FACILITIES PRODUCING K048-K052 WASTES BY EPA REGION	2-4
2-3	GENERATION OF WASTEWATERS IN THE PETROLEUM REFINING INDUSTRY	2-9
2-4	AVAILABLE CHARACTERIZATION DATA FOR K048	2-17
2-5	AVAILABLE CHARACTERIZATION DATA FOR K049	2-19
2-6	AVAILABLE CHARACTERIZATION DATA FOR K050	2-21
2-7	AVAILABLE CHARACTERIZATION DATA FOR K051	2-23
2-8	AVAILABLE CHARACTERIZATION DATA FOR K052	2-25
3-1	TREATMENT PERFORMANCE DATA COLLECTED BY EPA FOR K048 AND K051, PLANT A - FLUIDIZED BED INCINERATION SAMPLE SET #1	3-86
3-2	TREATMENT PERFORMANCE DATA COLLECTED BY EPA FOR K048 AND K051, PLANT A - FLUIDIZED BED INCINERATION SAMPLE SET #2	3-89
3-3	TREATMENT PERFORMANCE DATA COLLECTED BY EPA FOR K048 AND K051, PLANT A - FLUIDIZED BED INCINERATION SAMPLE SET #3	3-92
3-4	TREATMENT PERFORMANCE DATA COLLECTED BY EPA FOR K048 AND K051, PLANT A - FLUIDIZED BED INCINERATION SAMPLE SET #4	3-95
3-5	TREATMENT PERFORMANCE DATA COLLECTED BY EPA FOR K048 AND K051, PLANT A - FLUIDIZED BED INCINERATION SAMPLE SET #5	3-98
3-6	TREATMENT PERFORMANCE DATA COLLECTED BY EPA FOR K048 AND K051, PLANT A - FLUIDIZED BED INCINERATION SAMPLE SET #6	3-101
3-7	TREATMENT PERFORMANCE DATA SUBMITTED BY INDUSTRY FOR PETROLEUM REFINING WASTES, PLANT K (REPORT 2) - SOLVENT EXTRACTION	3-104
3-8	TREATMENT PERFORMANCE DATA COLLECTED BY EPA FOR K048 AND K051, PLANT I - STABILIZATION OF INCINERATOR ASH	3-113

LIST OF TABLES (Continued)

Table		Page
3-9	TREATMENT PERFORMANCE DATA SUBMITTED BY INDUSTRY FOR K049, PLANT J - MICROENCAPSULATION/POZZOLANIC STABILIZATION	3-115
3-10	TREATMENT PERFORMANCE DATA SUBMITTED BY INDUSTRY FOR K051, PLANT J - MICROENCAPSULATION/POZZOLANIC STABILIZATION	3-116
3-11	TREATMENT PERFORMANCE DATA SUBMITTED BY INDUSTRY FOR PETROLEUM REFINERY WASTES, PLANT J - MICROENCAPSULATION/ POZZOLANIC STABILIZATION	3-117
3-12	TREATMENT PERFORMANCE DATA SUBMITTED BY INDUSTRY FOR K051 AND K052, PLANT J - MICROENCAPSULATION/POZZOLANIC STABILIZATION	3-118
3-13	TREATMENT PERFORMANCE DATA SUBMITTED BY INDUSTRY FOR PETROLEUM REFINERY WASTES, PLANT J - SODIUM SILICATE/ POZZOLANIC STABILIZATION	3-119
3-14	TREATMENT PERFORMANCE DATA SUBMITTED BY INDUSTRY FOR K051 AND K052, PLANT J - SODIUM SILICATE/POZZOLANIC STABILIZATION	3-120
3-15	TREATMENT PERFORMANCE DATA SUBMITTED BY INDUSTRY FOR PETROLEUM REFINERY WASTES, PLANT J - CEMENT, FLY ASH, AND LIME STABILIZATION	3-121
3-16	TREATMENT PERFORMANCE DATA SUBMITTED BY INDUSTRY FOR K051 AND K052, PLANT J - CEMENT, FLY ASH, AND LIME STABILIZATION	3-122
3-17	TREATMENT PERFORMANCE DATA SUBMITTED BY INDUSTRY FOR PETROLEUM REFINERY WASTES, PLANT J - SODIUM SILICATE/ POZZOLANIC STABILIZATION	3-123
3-18	TREATMENT PERFORMANCE DATA SUBMITTED BY INDUSTRY FOR K051 AND K052, PLANT J - SODIUM SILICATE/POZZOLANIC STABILIZATION	3-124
4-1	TREATMENT CONCENTRATIONS FOR FLUIDIZED BED INCINERATOR ASH CORRECTED FOR ACCURACY: PLANT A	4-14
4-2	TREATMENT CONCENTRATIONS FOR TCLP EXTRACTS OF STABILIZED INCINERATOR ASH CORRECTED FOR ACCURACY: PLANT I	4-17

LIST OF TABLES (Continued)

Table		Page
4-3	TREATMENT CONCENTRATIONS FOR BDAT LIST ORGANIC CONSTITUENTS CORRECTED FOR ACCURACY (K019 SCRUBBER WATER)	4-18
4-4	TREATMENT CONCENTRATIONS FOR BDAT LIST METAL CONSTITUENTS CORRECTED FOR ACCURACY (K062 AND METAL-BEARING CHARACTERISTIC WASTES)	4-19
4-5	RESULTS OF THE ANALYSIS OF VARIANCE TEST COMPARING FLUIDIZED BED INCINERATION AND FLUIDIZED BED INCINERATION FOLLOWED BY ASH STABILIZATION	4-20
5-1	BDAT LIST CONSTITUENTS DETECTED IN UNTREATED K048-K052 WASTES	5-20
5-2	BDAT LIST CONSTITUENTS CONSIDERED FOR REGULATION	5-28
5-3	BDAT LIST CONSTITUENTS SELECTED FOR REGULATION	5-30
6-1	CORRECTED TOTAL CONCENTRATION DATA FOR ORGANICS AND INORGANICS IN FLUIDIZED BED INCINERATOR ASH	6-13
6-2	CORRECTED TCLP DATA FOR METALS IN STABILIZED (LIME AND FLY ASH) INCINERATOR ASH	6-14
6-3	CALCULATION OF NONWASTEWATER TREATMENT STANDARDS FOR K048	6-15
6-4	CALCULATION OF NONWASTEWATER TREATMENT STANDARDS FOR K049	6-17
6-5	CALCULATION OF NONWASTEWATER TREATMENT STANDARDS FOR K050	6-19
6-6	CALCULATION OF NONWASTEWATER TREATMENT STANDARDS FOR K051	6-21
6-7	CALCULATION OF NONWASTEWATER TREATMENT STANDARDS FOR K052	6-23
6-8	CALCULATION OF WASTEWATER TREATMENT STANDARDS FOR K048	6-25

LIST OF TABLES (Continued)

Table		Page
6-9	CALCULATION OF WASTEWATER TREATMENT STANDARDS FOR K049	6-26
6-10	CALCULATION OF WASTEWATER TREATMENT STANDARDS FOR K050	6-27
6-11	CALCULATION OF WASTEWATER TREATMENT STANDARDS FOR K051	6-28
6-12	CALCULATION OF WASTEWATER TREATMENT STANDARDS FOR K052	6-29
7-1	BDAT TREATMENT STANDARDS FOR K048-K052 NONWASTEWATERS	7-6
7-2	BDAT TREATMENT STANDARDS FOR K048-K052 WASTEWATERS	7-7

LIST OF FIGURES

Figure		Page
2-1	FACILITIES PRODUCING K048-K052 WASTES BY STATE AND EPA REGION	2-5
2-2	GENERATION OF K048, K049, K050, K051, AND K052	2-8
3-1	LIQUID INJECTION INCINERATOR	3-17
3-2	ROTARY KILN INCIERATOR	3-18
3-3	FLUIDIZED BED INCINERATOR	3-20
3-4	FIXED HEARTH INCINERATOR	3-22
3-5	TWO-STAGE MIXER-SETTLER EXTRACTION SYSTEM	3-44
3-6	EXTRACTION COLUMNS WITH NONMECHANICAL AGITATION	3-45
3-7	CONTINUOUS HEXAVALENT CHROMIUM REDUCTION SYSTEM	3-67
3-8	CONTINUOUS CHEMICAL PRECIPITATION	3-75
3-9	CIRCULAR CLARIFIERS	3-78
3-10	INCLINED PLANE SETTLER	3-79

EXECUTIVE SUMMARY

BDAT Treatment Standards
K048, K049, K050, K051 and K052

Pursuant to the Hazardous and Solid Waste Amendments (HSWA) enacted on November 8, 1984 and in accordance with the procedures for establishing treatment standards under section 3004(m) of the Resource, Conservation and Recovery Act (RCRA), the Environmental Protection Agency (EPA) is proposing treatment standards for the listed wastes, K048, K049, K050, K051 and K052, based on the performance of the treatment technologies determined by the Agency to represent Best Demonstrated Available Technology (BDAT). This background document provides the detailed analyses that support this determination.

These BDAT treatment standards represent maximum acceptable concentration levels for selected hazardous constituents in the wastes or residuals from treatment and/or recycling. These levels are established as a prerequisite for land disposal of these wastes in accordance with 40 CFR Part 268 (Code of Federal Regulations). Wastes that when generated contain the regulated constituents at concentrations that do not exceed the treatment standards are not restricted from land disposal. The Agency has chosen to set levels for these wastes rather than designate the use of a specific treatment technology. The Agency believes that this allows the generators of these wastes a greater degree of flexibility in selecting a technology or train of technologies that can achieve these standards.

These standards become effective no later than August 8, 1988, as described in the schedule set forth in 40 CFR 268.10. However, because of the lack of nationwide incineration capacity at this time, the Agency is proposing to grant a two year nationwide variance to the effective date of the land disposal restrictions for these wastes.

According to 40 CFR 261.32 (hazardous wastes from specific sources) waste codes K048, K049, K050, K051 and K052 (referred to collectively as K048-K052) are from the petroleum refining industry and are listed as follows:

K048: Dissolved air flotation (DAF) float from the petroleum refining industry;

K049: Slop oil emulsion solids from the petroleum refining industry;

K050: Heat exchanger bundle cleaning sludge from the petroleum refining industry;

K051: API separator sludge from the petroleum refining industry; and

K052: Tank bottoms (leaded) from the petroleum refining industry.

Descriptions of the industry and specific processes generating these wastes, as well as descriptions of the physical and chemical waste characteristics, are provided in Section 2.0 of this document. The four digit Standard Industry Classification (SIC) code most often reported for the industry generating this waste code is 2911 (petroleum refining). The Agency estimates that there are approximately 193 facilities that may generate wastes identified as K048-K052.

The Agency has determined that K048-K052 collectively represent one general waste treatability group with two subgroups - wastewaters and nonwastewaters. For the purpose of the land disposal restrictions rule, wastewaters are defined as wastes containing less than 1% (weight basis) filterable solids and less than 1% (weight basis) total organic carbon (TOC). Wastes not meeting this definition are classified as nonwastewaters.

These waste treatability subgroups represent classes of wastes that have similar physical and chemical properties within the treatability group. EPA believes that each waste within these subgroups can be treated to the same concentrations when similar treatment technologies are applied. The Agency has examined the sources of these five petroleum refining wastes, the specific similarities in waste composition, applicable and demonstrated technologies, and attainable treatment performance in order to support a simplified regulatory approach. While the Agency has not, at this time, specifically identified additional wastes that fall into this treatability group or two subgroups, this does not preclude the Agency from using the treatment performance data used to establish these standards to establish standards for other similar wastes, in the future. A detailed discussion of applicable and demonstrated treatment technologies is provided in Section 3.0 of this document.

K048-K052, as generated, are oily sludges with moderate water content and are typically classified as nonwastewaters. Solid residuals from the treatment of these oily sludges (such as incinerator ash and

solidification residues) also fall into this classification. K048-K052 wastewaters are generated primarily as a result of the "derived-from rule" and the "mixture-rule" as outlined in 40 CFR 261.3 (definition of hazardous waste). The most common K048-K052 wastewaters are aqueous residues from treatment (such as scrubber water and direct contact cooling waters) and inadvertent mixtures of K048-K052 with other aqueous wastes.

The Agency is proposing BDAT treatment standards for the two treatability subgroups of K048-K052 wastes - wastewaters and nonwastewaters. In general, these treatment standards have been proposed for a total of seventeen (17) organic constituents, eight (8) metal constituents and one inorganic constituent; the Agency believes these constituents are indicators of effective treatment for all of the BDAT hazardous constituents that have been identified as present in the individual K048-K052 wastes. The organic constituents that are proposed for regulation in one or more of these five waste codes are: benzene, toluene, xylene, acenaphthene, anthracene, benzo(a)pyrene, bis(2-ethylhexyl)phthalate, chrysene, ortho-cresol, para-cresol, 2,4-dimethylphenol, di-n-butyl phthalate, fluorene, naphthalene, phenanthrene, phenol and pyrene. The metals and inorganic constituents that are proposed for regulation in one or more of these waste codes are arsenic, total chromium, copper, lead, nickel, selenium, vanadium, zinc and cyanide. Not all constituents are proposed for regulation in all five waste codes, since they were not found in treatable quantities in all of the untreated wastes. A detailed discussion of the selection of constituents to be regulated is presented in section 5.0 of this document.

BDAT treatment standards for K048-K052 nonwastewater are proposed based on performance data from a treatment train that consisted of full scale fluidized bed incineration followed by ash stabilization. Ash stabilization was achieved using lime and fly ash as stabilization agents. Testing was performed on representative samples of nonwastewater K048 and K051. The treatment performance data were then transferred to develop standards for nonwastewater K049, K050 and K052. Fluidized bed incineration followed by ash stabilization was determined to represent the best demonstrated available technology (BDAT) based on a comparison of performance data from this treatment train with performance data from other treatment technologies. These included solvent extraction, thermal drying, pressure filtration, and stabilization (without incineration). The Agency has determined that the data for these technologies generally indicated a lower level of performance. However, some of the data were not used because insufficient information were available on the quality assurance procedures performed necessary for the Agency to statistically compare the performance. A detailed discussion of the identification of BDAT is presented in Section 4.0 of this document.

BDAT organic constituent treatment standards for K048-K052 wastewaters are proposed based on a transfer of treatment performance data for the scrubber water residual from the incineration of K019 nonwastewater (K019 is listed as heavy ends from the distillation of ethylene dichloride in ethylene dichloride production). Standards for inorganic constituents were developed based on treatment of K062 and metal-bearing characteristic wastes from chromium reduction, lime and sulfide precipitation and vacuum filtration.

Treatment performance data were transferred on a constituent basis from either the same constituent or, in the case of organic constituents, from constituents judged to be similar in physical and chemical properties. A detailed discussion of the transfer of the data is presented in section 6.0 of this document.

The following tables list the specific BDAT treatment standards for wastes identified as K048, K049, K050, K051 and K052. The Agency is setting standards based on analysis of total constituent concentration for organic and inorganic constituents and based on analysis of leachate for metal constituents K048-K052 nonwastewaters. Standards are based on analysis of total constituent concentration for K048-K052 wastewaters. The leachate is obtained by use of the Toxicity Characteristic Leaching Procedure (TCLP) found in Appendix I of 40 CFR Part 268. The units for total constituent concentration are in parts per million (mg/kg) on a weight by weight basis for nonwastewater and in parts per million (mg/l) on a weight by volume basis for wastewater. The units for leachate analysis are in parts per million (mg/l) on a weight by volume basis.

BDAT TREATMENT STANDARDS FOR
K048-K052 NONWASTEWATERS

	Regulated Organic Constituents	Total Concentration (mg/kg)				
		K048	K049	K050	K051	K052
4.	Benzene	NA	3.93	NA	NA	NA
43.	Toluene	3.93	3.93	NA	3.93	3.93
215-217.	Xylene (total)	8.54	8.54	NA	8.54	8.54
62.	Benzo(a)pyrene	NA	NA	0.84	NA	NA
70.	Bis(2-ethylhexyl)phthalate	4.18	NA	NA	NA	NA
80.	Chrysene	0.84	0.84	NA	0.84	NA
81.	ortho-Cresol	NA	NA	NA	NA	0.84
82.	para-Cresol	NA	NA	NA	NA	0.84
98.	Di-n-butyl phthalate	4.18	NA	NA	4.18	NA
121.	Naphthalene	0.84	0.84	NA	0.84	0.84
141.	Penanthrene	0.84	0.84	NA	0.84	0.84
142.	Phenol	0.84	0.84	0.84	0.84	0.84
145.	Pyrene	NA	1.06	NA	1.06	NA

	Regulated Metal Constituents	TCLP (mg/l)				
		K048	K049	K050	K051	K052
155.	Arsenic	0.006	0.006	0.006	0.006	0.006
159.	Chromium (total)	1.68	1.68	1.68	1.68	1.68
160.	Copper	0.013	0.013	0.013	0.013	0.013
163.	Nickel	0.048	0.048	0.048	0.048	0.048
164.	Selenium	0.025	0.025	0.025	0.025	0.025
167.	Vanadium	0.18	0.18	0.18	0.18	0.18
168.	Zinc	0.141	0.141	0.141	0.141	0.141

	Regulated Inorganic Constituents	Total Concentration (mg/kg)				
		K048	K049	K050	K051	K052
169.	Cyanide	1.48	1.48	1.48	1.48	1.48

NA - Not applicable. This constituent is not being proposed for regulation for this waste.

BDAT TREATMENT STANDARDS FOR K048-K052 WASTEWATERS

Regulated Constituents	Total Concentration (mg/l)				
	K048	K049	K050	K051	K052
4. Benzene	NA	0.023	NA	NA	0.023
43. Toluene	0.007	0.007	NA	0.007	NA
215-217. Xylene (total)	0.007	0.007	NA	0.007	0.007
52. Acenaphthene	NA	NA	NA	0.007	NA
57. Anthracene	NA	0.007	NA	NA	NA
81. ortho-Cresol	NA	NA	NA	NA	0.007
82. para-Cresol	NA	NA	NA	NA	0.007
96. 2,4-dimethylphenol	NA	0.007	NA	NA	0.007
109. Fluorene	0.007	NA	NA	0.007	NA
121. Naphthalene	0.007	0.007	NA	0.007	0.007
141. Phenanthrene	0.007	0.007	NA	0.007	0.007
142. Phenol	0.007	0.007	0.007	0.007	0.007
159. Chromium (total)	0.20	0.20	0.20	0.20	0.20
162. Lead	0.037	0.037	0.037	0.037	0.037
169. Zinc	0.40	0.40	0.40	0.40	0.40

NA - Not Applicable. This constituent is not being proposed for regulation for this waste.

1. INTRODUCTION

This section of the background document presents a summary of the legal authority pursuant to which the BDAT treatment standards were developed, a summary of EPA's promulgated methodology for developing BDAT, and finally a discussion of the petition process that should be followed to request a variance from the BDAT treatment standards.

1.1 Legal Background

1.1.1 Requirements Under HSWA

The Hazardous and Solid Waste Amendments of 1984 (HSWA), enacted on November 8, 1984, and which amended the Resource Conservation and Recovery Act of 1976 (RCRA), impose substantial new responsibilities on those who handle hazardous waste. In particular, the amendments require the Agency to promulgate regulations that restrict the land disposal of untreated hazardous wastes. In its enactment of HSWA, Congress stated explicitly that "reliance on land disposal should be minimized or eliminated, and land disposal, particularly landfill and surface impoundment, should be the least favored method for managing hazardous wastes" (RCRA section 1002(b)(7), 42 U.S.C. 6901(b)(7)).

One part of the amendments specifies dates on which particular groups of untreated hazardous wastes will be prohibited from land disposal unless "it has been demonstrated to the Administrator, to a reasonable degree of certainty, that there will be no migration of hazardous constituents from the disposal unit or injection zone for as long as the wastes remain hazardous" (RCRA section 3004(d)(1), (e)(1), (g)(5), 42 U.S.C. 6924 (d)(1), (e)(1), (g)(5)).

For the purpose of the restrictions, HSWA defines land disposal "to include, but not be limited to, any placement of . . . hazardous waste in a landfill, surface impoundment, waste pile, injection well, land treatment facility, salt dome formation, salt bed formation, or underground mine or cave" (RCRA section 3004(k), 42 U.S.C. 6924(k)). Although HSWA defines land disposal to include injection wells, such disposal of solvents, dioxins, and certain other wastes, known as the California List wastes, is covered on a separate schedule (RCRA section 3004(f)(2), 42 U.S.C. 6924 (f)(2)). This schedule requires that EPA develop land disposal restrictions for deep well injection by August 8, 1988.

The amendments also require the Agency to set "levels or methods of treatment, if any, which substantially diminish the toxicity of the waste or substantially reduce the likelihood of migration of hazardous constituents from the waste so that short-term and long-term threats to human health and the environment are minimized" (RCRA section 3004(m)(1), 42 U.S.C. 6924 (m)(1)). Wastes that meet treatment standards established by EPA are not prohibited and may be land disposed. In setting treatment standards for listed or characteristic wastes, EPA may establish different standards for particular wastes within a single waste code with differing treatability characteristics. One such characteristic is the physical form of the waste. This frequently leads to different standards for wastewaters and nonwastewaters.

Alternatively, EPA can establish a treatment standard that is applicable to more than one waste code when, in EPA's judgment, all the waste can be treated to the same concentration. In those instances where a generator can demonstrate that the standard promulgated for the generator's waste cannot be achieved, the Agency also can grant a variance from a treatment standard by revising the treatment standard for that particular waste through rulemaking procedures. (A further discussion of treatment variances is provided in Section 1.3.)

The land disposal restrictions are effective when promulgated unless the Administrator grants a national variance and establishes a different date (not to exceed 2 years beyond the statutory deadline) based on "the earliest date on which adequate alternative treatment, recovery, or disposal capacity which protects human health and the environment will be available" (RCRA section 3004(h)(2), 42 U.S.C. 6924 (h)(2)).

If EPA fails to set a treatment standard by the statutory deadline for any hazardous waste in the First Third or Second Third of the schedule (see section 1.1.2), the waste may not be disposed in a landfill or surface impoundment unless the facility is in compliance with the minimum technological requirements specified in section 3004(o) of RCRA. In addition, prior to disposal, the generator must certify to the Administrator that the availability of treatment capacity has been investigated and it has been determined that disposal in a landfill or surface impoundment is the only practical alternative to treatment currently available to the generator. This restriction on the use of

landfills and surface impoundments applies until EPA sets a treatment standard for the waste or until May 8, 1990, whichever is sooner. If the Agency fails to set a treatment standard for any ranked hazardous waste by May 8, 1990, the waste is automatically prohibited from land disposal unless the waste is placed in a land disposal unit that is the subject of a successful "no migration" demonstration (RCRA section 3004(g), 42 U.S.C. 6924(g)). "No migration" demonstrations are based on case-specific petitions that show there will be no migration of hazardous constituents from the unit for as long as the waste remains hazardous.

1.1.2 Schedule for Developing Restrictions

Under Section 3004(g) of RCRA, EPA was required to establish a schedule for developing treatment standards for all wastes that the Agency had listed as hazardous by November 8, 1984. Section 3004(g) required that this schedule consider the intrinsic hazards and volumes associated with each of these wastes. The statute required EPA to set treatment standards according to the following schedule:

(a) Solvents and dioxins standards must be promulgated by November 8, 1986;

(b) The "California List" must be promulgated by July 8, 1987;

(c) At least one-third of all listed hazardous wastes must be promulgated by August 8, 1988 (First Third);

(d) At least two-thirds of all listed hazardous wastes must be promulgated by June 8, 1989 (Second Third); and

(e) All remaining listed hazardous wastes and all hazardous wastes identified as of November 8, 1984, by one or more of the characteristics defined in 40 CFR Part 261 must be promulgated by May 8, 1990 (Third Third).

The statute specifically identified the solvent wastes as those covered under waste codes F001, F002, F003, F004, and F005; it identified the dioxin-containing hazardous wastes as those covered under waste codes F020, F021, F022, and F023.

Wastes collectively known as the California List wastes, defined under Section 3004(d) of HSWA, are liquid hazardous wastes containing metals, free cyanides, PCBs, corrosives (i.e., a pH less than or equal to 2.0), and any liquid or nonliquid hazardous waste containing halogenated organic compounds (HOCs) above 0.1 percent by weight. Rules for the California List were proposed on December 11, 1986, and final rules for PCBs, corrosives, and HOC-containing wastes were established August 12, 1987. In that rule, EPA elected not to establish standards for metals. Therefore, the statutory limits became effective.

On May 28, 1986, EPA published a final rule (51 FR 19300) that delineated the specific waste codes that would be addressed by the First Third, Second Third, and Third Third. This schedule is incorporated into 40 CFR 268.10, .11, and .12.

1.2 Summary of Promulgated BDAT Methodology

In a November 7, 1986, rulemaking, EPA promulgated a technology-based approach to establishing treatment standards under section 3004(m). Section 3004(m) also specifies that treatment standards must "minimize" long- and short-term threats to human health and the environment arising from land disposal of hazardous wastes.

Congress indicated in the legislative history accompanying the HSWA that "[t]he requisite levels of [sic] methods of treatment established by the Agency should be the best that has been demonstrated to be achievable," noting that the intent is "to require utilization of available technology" and not a "process which contemplates technology-forcing standards" (Vol. 130 Cong. Rec. S9178 (daily ed., July 25, 1984)). EPA has interpreted this legislative history as suggesting that Congress considered the requirement under 3004(m) to be met by application of the best demonstrated and achievable (i.e., available) technology prior to land disposal of wastes or treatment residuals. Accordingly, EPA's treatment standards are generally based on the performance of the best demonstrated available technology (BDAT) identified for treatment of the hazardous constituents. This approach involves the identification of potential treatment systems, the determination of whether they are demonstrated and available, and the collection of treatment data from well-designed and well-operated systems.

The treatment standards, according to the statute, can represent levels or methods of treatment, if any, that substantially diminish the toxicity of the waste or substantially reduce the likelihood of migration of hazardous constituents. Wherever possible, the Agency prefers to establish BDAT treatment standards as "levels" of treatment (i.e., performance standards) rather than adopting an approach that would require the use of specific treatment "methods." EPA believes that concentration-based treatment levels offer the regulated community greater

flexibility to develop and implement compliance strategies as well as an incentive to develop innovative technologies.

1.2.1 Waste Treatability Group

In developing the treatment standards, EPA first characterizes the waste(s). As necessary, EPA may establish treatability groups for wastes having similar physical and chemical properties. That is, if EPA believes that wastes represented by different waste codes could be treated to similar concentrations using identical technologies, the Agency combines the codes into one treatability group. EPA generally considers wastes to be similar when they are both generated from the same industry and from similar processing stages. In addition, EPA may combine two or more separate wastes into the same treatability group when data are available showing that the waste characteristics affecting performance are similar or that one waste would be expected to be less difficult to treat.

Once the treatability groups have been established, EPA collects and analyzes data on identified technologies used to treat the wastes in each treatability group. The technologies evaluated must be demonstrated on the waste or a similar waste and must be available for use.

1.2.2 Demonstrated and Available Treatment Technologies

Consistent with legislative history, EPA considers demonstrated technologies to be those that are used to treat the waste of interest or a similar waste with regard to parameters that affect treatment selection (see November 7, 1986, 51 FR 40588). EPA also will consider as treatment those technologies used to separate or otherwise process chemicals and

other materials. Some of these technologies clearly are applicable to waste treatment, since the wastes are similar to raw materials processed in industrial applications.

For most of the waste treatability groups for which EPA will promulgate treatment standards, EPA will identify demonstrated technologies either through review of literature related to current waste treatment practices or on the basis of information provided by specific facilities currently treating the waste or similar wastes.

In cases where the Agency does not identify any facilities treating wastes represented by a particular waste treatability group, EPA may transfer a finding of demonstrated treatment. To do this, EPA will compare the parameters affecting treatment selection for the waste treatability group of interest to other wastes for which demonstrated technologies already have been determined. The parameters affecting treatment selection and their use for this waste are described in Section 3.4 of this document. If the parameters affecting treatment selection are similar, then the Agency will consider the treatment technology also to be demonstrated for the waste of interest. For example, EPA considers rotary kiln incineration a demonstrated technology for many waste codes containing hazardous organic constituents, high total organic content, and high filterable solids content, regardless of whether any facility is currently treating these wastes. The basis for this determination is data found in literature and data generated by EPA confirming the use of rotary kiln incineration on wastes having the above characteristics.

If no commercial treatment or recovery operations are identified for a waste or wastes with similar physical or chemical characteristics that affect treatment selection, the Agency will be unable to identify any demonstrated treatment technologies for the waste, and, accordingly, the waste will be prohibited from land disposal (unless handled in accordance with the exemption and variance provisions of the rule). The Agency is, however, committed to establishing treatment standards as soon as new or improved treatment processes are demonstrated (and available).

Operations only available at research facilities, pilot- and bench-scale operations will not be considered in identifying demonstrated treatment technologies for a waste because these technologies would not necessarily be "demonstrated." Nevertheless, EPA may use data generated at research facilities in assessing the performance of demonstrated technologies.

As discussed earlier, Congress intended that technologies used to establish treatment standards under Section 3004(m) be not only "demonstrated," but also available. To decide whether demonstrated technologies may be considered "available," the Agency determines whether they (1) are commercially available and (2) substantially diminish the toxicity of the waste or substantially reduce the likelihood of migration of hazardous constituents from the waste.

EPA will only set treatment standards based on a technology that meets the above criteria. Thus, the decision to classify a technology as "unavailable" will have a direct impact on the treatment standard. If

the best technology is unavailable, the treatment standard will be based on the next best treatment technology determined to be available. To the extent that the resulting treatment standards are less stringent, greater concentrations of hazardous constituents in the treatment residuals could be placed in land disposal units.

There also may be circumstances in which EPA concludes that for a given waste none of the demonstrated treatment technologies are "available" for purposes of establishing the 3004(m) treatment performance standards. Subsequently, these wastes will be prohibited from continued placement in or on the land unless managed in accordance with applicable exemptions and variance provisions. The Agency is, however, committed to establishing new treatment standards as soon as new or improved treatment processes become "available."

(1) Proprietary or Patented Processes. If the demonstrated treatment technology is a proprietary or patented process that is not generally available, EPA will not consider the technology in its determination of the treatment standards. EPA will consider proprietary or patented processes available if it determines that the treatment method can be purchased or licensed from the proprietor or is commercially available treatment. The services of the commercial facility offering this technology often can be purchased even if the technology itself cannot be purchased.

(2) Substantial Treatment. To be considered "available," a demonstrated treatment technology must "substantially diminish the

toxicity" of the waste or "substantially reduce the likelihood of migration of hazardous constituents" from the waste in accordance with section 3004(m). By requiring that substantial treatment be achieved in order to set a treatment standard, the statute ensures that all wastes are adequately treated before being placed in or on the land and ensures that the Agency does not require a treatment method that provides little or no environmental benefit. Treatment will always be deemed substantial if it results in nondetectable levels of the hazardous constituents of concern. If nondetectable levels are not achieved, then a determination of substantial treatment will be made on a case-by-case basis. This approach is necessary because of the difficulty of establishing a meaningful guideline that can be applied broadly to the many wastes and technologies to be considered. EPA will consider the following factors in an effort to evaluate whether a technology provides substantial treatment on a case-by-case basis:

(a) Number and types of constituents treated;

(b) Performance (concentration of the constituents in the treatment residuals); and

(c) Percent of constituents removed.

If none of the demonstrated treatment technologies achieve substantial treatment of a waste, the Agency cannot establish treatment standards for the constituents of concern in that waste.

1.2.3 Collection of Performance Data

Performance data on the demonstrated available technologies are evaluated by the Agency to determine whether the data are representative

of well-designed and well-operated treatment systems. Only data from well-designed and well-operated systems are included in determining BDAT. The data evaluation includes data already collected directly by EPA and/or data provided by industry. In those instances where additional data are needed to supplement existing information, EPA collects additional data through a sampling and analysis program. The principal elements of this data collection program are: (a) identification of facilities for site visits, (b) engineering site visit, (c) Sampling and Analysis Plan, (d) sampling visit, and (e) Onsite Engineering Report.

(1) Identification of Facilities for Site Visits. To identify facilities that generate and/or treat the waste of concern, EPA uses a number of information sources. These include Stanford Research Institute's Directory of Chemical Producers, EPA's Hazardous Waste Data Management System (HWDMS), the 1986 Treatment, Storage, Disposal Facility (TSDF) National Screening Survey, and EPA's Industry Studies Data Base. In addition, EPA contacts trade associations to inform them that the Agency is considering visits to facilities in their industry and to solicit assistance in identifying facilities for EPA to consider in its treatment sampling program.

After identifying facilities that treat the waste, EPA uses this hierarchy to select sites for engineering visits: (1) generators treating single wastes on site; (2) generators treating multiple wastes together on site; (3) commercial treatment, storage, and disposal facilities

(TSDFs); and (4) EPA in-house treatment. This hierarchy is based on two concepts: (1) to the extent possible, EPA should develop treatment standards from data produced by treatment facilities handling only a single waste, and (2) facilities that routinely treat a specific waste have had the best opportunity to optimize design parameters. Although excellent treatment can occur at many facilities that are not high in this hierarchy, EPA has adopted this approach to avoid, when possible, ambiguities related to the mixing of wastes before and during treatment.

When possible, the Agency will evaluate treatment technologies using commercially operated systems. If performance data from properly designed and operated commercial treatment methods for a particular waste or a waste judged to be similar are not available, EPA may use data from research facilities operations. Whenever research facility data are used, EPA will explain why such data were used in the preamble and background document and will request comments on the use of such data.

Although EPA's data bases provide information on treatment for individual wastes, the data bases rarely provide data that support the selection of one facility for sampling over another. In cases where several treatment sites appear to fall into the same level of the hierarchy, EPA selects sites for visits strictly on the basis of which facility could most expeditiously be visited and later sampled if justified by the engineering visit.

(2) Engineering Site Visit. Once a treatment facility has been selected, an engineering site visit is made to confirm that a candidate for sampling meets EPA's criteria for a well-designed facility and to ensure that the necessary sampling points can be accessed to determine operating parameters and treatment effectiveness. During the visit, EPA also confirms that the facility appears to be well operated, although the actual operation of the treatment system during sampling is the basis for EPA's decisions regarding proper operation of the treatment unit. In general, the Agency considers a well-designed facility to be one that contains the unit operations necessary to treat the various hazardous constituents of the waste as well as to control other nonhazardous materials in the waste that may affect treatment performance.

In addition to ensuring that a system is reasonably well designed, the engineering visit examines whether the facility has a way to measure the operating parameters that affect performance of the treatment system during the waste treatment period. For example, EPA may choose not to sample a treatment system that operates in a continuous mode, for which an important operating parameter cannot be continuously recorded. In such systems, instrumentation is important in determining whether the treatment system is operating at design values during the waste treatment period.

(3) Sampling and Analysis Plan. If after the engineering site visit the Agency decides to sample a particular plant, the Agency will then develop a site-specific Sampling and Analysis Plan (SAP) according to the Generic Quality Assurance Project Plan for the Land Disposal Restriction

Program ("BDAT"), EPA/530-SW-87-011. In brief, the SAP discusses where the Agency plans to sample, how the samples will be taken, the frequency of sampling, the constituents to be analyzed and the method of analysis, operational parameters to be obtained, and specific laboratory quality control checks on the analytical results.

The Agency will generally produce a draft of the site-specific Sampling and Analysis Plan within 2 to 3 weeks of the engineering visit. The draft of the SAP is then sent to the plant for review and comment. With few exceptions, the draft SAP should be a confirmation of data collection activities discussed with the plant personnel during the engineering site visit. EPA encourages plant personnel to recommend any modifications to the SAP that they believe will improve the quality of the data.

It is important to note that sampling of a plant by EPA does not mean that the data will be used in the development of treatment standards for BDAT. EPA's final decision on whether to use data from a sampled plant depends on the actual analysis of the waste being treated and on the operating conditions at the time of sampling. Although EPA would not plan to sample a facility that was not ostensibly well-designed and well-operated, there is no way to ensure that at the time of the sampling the facility will not experience operating problems. Additionally, EPA statistically compares its test data to suitable industry-provided data, where available, in its determination of what data to use in developing treatment standards. The methodology for comparing data is presented later in this section.

(Note: Facilities wishing to submit data for consideration in the development of BDAT standards should, to the extent possible, provide sampling information similar to that acquired by EPA. Such facilities should review the Generic Quality Assurance Project Plan for the Land Disposal Restriction Program ("BDAT"), which delineates all of the quality control and quality assurance measures associated with sampling and analysis. Quality assurance and quality control procedures are summarized in Section 1.2.6 of this document.)

(4) Sampling Visit. The purpose of the sampling visit is to collect samples that characterize the performance of the treatment system and to document the operating conditions that existed during the waste treatment period. At a minimum, the Agency attempts to collect sufficient samples of the untreated waste and solid and liquid treatment residuals so that variability in the treatment process can be accounted for in the development of the treatment standards. To the extent practicable, and within safety constraints, EPA or its contractors collect all samples and ensure that chain-of-custody procedures are conducted so that the integrity of the data is maintained.

In general, the samples collected during the sampling visit will have already been specified in the SAP. In some instances, however, EPA will not be able to collect all planned samples because of changes in the facility operation or plant upsets; EPA will explain any such deviations from the SAP in its follow-up Onsite Engineering Report.

(5) Onsite Engineering Report. EPA summarizes all its data collection activities and associated analytical results for testing at a facility in a report referred to as the Onsite Engineering Report (OER). This report characterizes the waste(s) treated, the treated residual concentrations, the design and operating data, and all analytical results including methods used and accuracy results. This report also describes any deviations from EPA's suggested analytical methods for hazardous wastes (Test Methods for Evaluating Solid Waste, SW-846, Third Edition, November 1986).

After the Onsite Engineering Report is completed, the report is submitted to the plant for review. This review provides the plant with a final opportunity to claim any information contained in the report as confidential. Following the review and incorporation of comments, as appropriate, the report is made available to the public with the exception of any material claimed as confidential by the plant.

1.2.4 Hazardous Constituents Considered and Selected for Regulation

(1) Development of BDAT List. The list of hazardous constituents within the waste codes that are targeted for treatment is referred to by the Agency as the BDAT constituent list. This list, provided as Table 1-1, is derived from the constituents presented in 40 CFR Part 261, Appendix VII and Appendix VIII, as well as several ignitable constituents used as the basis of listing wastes as F003 and F005. These sources provide a comprehensive list of hazardous constituents specifically regulated under RCRA. The BDAT list consists of those constituents that can be analyzed using methods published in SW-846, Third Edition.

Table 1-1 BDAT Constituent List

BDAT reference no.	Parameter	CAS no.
	Volatiles	
222	Acetone	67-64-1
1	Acetonitrile	75-05-8
2	Acrolein	107-02-8
3	Acrylonitrile	107-13-1
4	Benzene	71-43-2
5	Bromodichloromethane	75-27-4
6.	Bromomethane	74-83-9
223	n-Butyl alcohol	71-36-3
7	Carbon tetrachloride	56-23-5
8	Carbon disulfide	75-15-0
9.	Chlorobenzene	108-90-7
10.	2-Chloro-1,3-butadiene	126-99-8
11.	Chlorodibromomethane	124-48-1
12	Chloroethane	75-00-3
13.	2-Chloroethyl vinyl ether	110-75-8
14.	Chloroform	67-66-3
15.	Chloromethane	74-87-3
16	3-Chloropropene	107-05-1
17.	1,2-Dibromo-3-chloropropane	96-12-8
18.	1,2-Dibromoethane	106-93-4
19.	Dibromomethane	74-95-3
20.	Trans-1,4-Dichloro-2-butene	110-57-6
21	Dichlorodifluoromethane	75-71-8
22	1,1-Dichloroethane	75-34-3
23	1,2-Dichloroethane	107-06-2
24.	1,1-Dichloroethylene	75-35-4
25	Trans-1,2-Dichloroethene	156-60-5
26	1,2-Dichloropropane	78-87-5
27.	Trans-1,3-Dichloropropene	10061-02-6
28	cis-1,3-Dichloropropene	10061-01-5
29	1,4-Dioxane	123-91-1
224	2-Ethoxyethanol	110-80-5
225.	Ethyl acetate	141-78-6
226	Ethyl benzene	100-41-4
30	Ethyl cyanide	107-12-0
227	Ethyl ether	60-29-7
31.	Ethyl methacrylate	97-63-2
214	Ethylene oxide	75-21-8
32.	Iodomethane	74-88-4

Table 1-1 (continued)

BDAT reference no.	Parameter	CAS no.
	Volatiles (continued)	
33.	Isobutyl alcohol	78-83-1
228	Methanol	67-56-1
34	Methyl ethyl ketone	78-93-3
229.	Methyl isobutyl ketone	108-10-1
35.	Methyl methacrylate	80-62-6
37	Methacrylonitrile	126-98-7
38	Methylene chloride	75-09-2
230.	2-Nitropropane	79-46-9
39.	Pyridine	110-86-1
40.	1,1,1,2-Tetrachloroethane	630-20-6
41.	1,1,2,2-Tetrachloroethane	79-34-6
42	Tetrachloroethene	127-18-4
43.	Toluene	108-88-3
44.	Tribromomethane	75-25-2
45	1,1,1-Trichloroethane	71-55-6
46.	1,1,2-Trichloroethane	79-00-5
47	Trichloroethene	79-01-6
48.	Trichloromonofluoromethane	75-69-4
49.	1,2,3-Trichloropropane	96-18-4
231.	1,1,2-Trichloro-1,2,2-trifluoro-ethane	76-13-1
50	Vinyl chloride	75-01-4
215.	1,2-Xylene	97-47-6
216.	1,3-Xylene	108-38-3
217	1,4-Xylene	106-44-5
	Semivolatiles	
51	Acenaphthalene	208-96-8
52.	Acenaphthene	83-32-9
53	Acetophenone	96-86-2
54	2-Acetylaminofluorene	53-96-3
55	4-Aminobiphenyl	92-67-1
56	Aniline	62-53-3
57.	Anthracene	120-12-7
58	Aramite	140-57-8
59.	Benz(a)anthracene	56-55-3
218	Benzal chloride	98-87-3
60	Benzenethiol	108-98-5
61	Deleted	
62.	Benzo(a)pyrene	50-32-8

Table 1-1 (continued)

BDAT reference no.	Parameter	CAS no.
	Semivolatiles (continued)	
63	Benzo(b)fluoranthene	205-99-2
64	Benzo(ghi)perylene	191-24-2
65.	Benzo(k)fluoranthene	207-08-9
66.	p-Benzoquinone	106-51-4
67	Bis(2-chloroethoxy)methane	111-91-1
68.	Bis(2-chloroethyl)ether	111-44-4
69.	Bis(2-chloroisopropyl)ether	39638-32-9
70.	Bis(2-ethylhexyl)phthalate	117-81-7
71.	4-Bromophenyl phenyl ether	101-55-3
72.	Butyl benzyl phthalate	85-68-7
73.	2-sec-Butyl-4,6-dinitrophenol	88-85-7
74.	p-Chloroaniline	106-47-8
75.	Chlorobenzilate	510-15-6
76	p-Chloro-m-cresol	59-50-7
77.	2-Chloronaphthalene	91-58-7
78.	2-Chlorophenol	95-57-8
79.	3-Chloropropionitrile	542-76-7
80.	Chrysene	218-01-9
81	ortho-Cresol	95-48-7
82.	para-Cresol	106-44-5
232.	Cyclohexanone	108-94-1
83	Dibenz(a,h)anthracene	53-70-3
84.	Dibenzo(a,e)pyrene	192-65-4
85	Dibenzo(a,i)pyrene	189-55-9
86.	m-Dichlorobenzene	541-73-1
87.	o-Dichlorobenzene	95-50-1
88.	p-Dichlorobenzene	106-46-7
89.	3,3'-Dichlorobenzidine	91-94-1
90	2,4-Dichlorophenol	120-83-2
91	2,6-Dichlorophenol	87-65-0
92.	Diethyl phthalate	84-66-2
93	3,3'-Dimethoxybenzidine	119-90-4
94	p-Dimethylaminoazobenzene	60-11-7
95	3,3'-Dimethylbenzidine	119-93-7
96	2,4-Dimethylphenol	105-67-9
97.	Dimethyl phthalate	131-11-3
98.	Di-n-butyl phthalate	84-74-2
99.	1,4-Dinitrobenzene	100-25-4
100	4,6-Dinitro-o-cresol	534-52-1
101	2,4-Dinitrophenol	51-28-5

Table 1-1 (continued)

BDAT reference no.	Parameter	CAS no.
	Semivolatiles (continued)	
102.	2,4-Dinitrotoluene	121-14-2
103	2,6-Dinitrotoluene	606-20-2
104.	Di-n-octyl phthalate	117-84-0
105.	Di-n-propylnitrosamine	621-64-7
106	Diphenylamine	122-39-4
219.	Diphenylnitrosamine	86-30-6
107	1,2-Diphenylhydrazine	122-66-7
108.	Fluoranthene	206-44-0
109	Fluorene	86-73-7
110.	Hexachlorobenzene	118-74-1
111.	Hexachlorobutadiene	87-68-3
112	Hexachlorocyclopentadiene	77-47-4
113	Hexachloroethane	67-72-1
114	Hexachlorophene	70-30-4
115	Hexachloropropene	1888-71-7
116.	Indeno(1,2,3-cd)pyrene	193-39-5
117	Isosafrole	120-58-1
118.	Methapyrilene	91-80-5
119.	3-Methylcholanthrene	56-49-5
120	4,4'-Methylenebis (2-chloroaniline)	101-14-4
36	Methyl methanesulfonate	66-27-3
121	Naphthalene	91-20-3
122	1,4-Naphthoquinone	130-15-4
123	1-Naphthylamine	134-32-7
124	2-Naphthylamine	91-59-8
125	p-Nitroaniline	100-01-6
126	Nitrobenzene	98-95-3
127	4-Nitrophenol	100-02-7
128	N-Nitrosodi-n-butylamine	924-16-3
129.	N-Nitrosodiethylamine	55-18-5
130	N-Nitrosodimethylamine	62-75-9
131	N-Nitrosomethylethylamine	10595-95-6
132	N-Nitrosomorpholine	59-89-2
133	N-Nitrosopiperidine	100-75-4
134	n-Nitrosopyrrolidine	930-55-2
135	5-Nitro-o-toluidine	99-65-8
136	Pentachlorobenzene	608-93-5
137	Pentachloroethane	76-01-7
138.	Pentachloronitrobenzene	82-68-8

Table 1-1 (continued)

BDAT reference no.	Parameter	CAS no.
	Semivolatiles (continued)	
139.	Pentachlorophenol	87-86-5
140.	Phenacetin	62-44-2
141.	Phenanthrene	85-01-8
142.	Phenol	108-95-2
220.	Phthalic anhydride	85-44-9
143.	2-Picoline	109-06-8
144.	Pronamide	23950-58-5
145.	Pyrene	129-00-0
146.	Resorcinol	108-46-3
147.	Safrole	94-59-7
148.	1,2,4,5-Tetrachlorobenzene	95-94-3
149.	2,3,4,6-Tetrachlorophenol	58-90-2
150.	1,2,4-Trichlorobenzene	120-82-1
151.	2,4,5-Trichlorophenol	95-95-4
152.	2,4,6-Trichlorophenol	88-06-2
153.	Tris(2,3-dibromopropyl) phosphate	126-72-7
	Metals	
154.	Antimony	7440-36-0
155.	Arsenic	7440-38-2
156.	Barium	7440-39-3
157.	Beryllium	7440-41-7
158	Cadmium	7440-43-9
159.	Chromium (total)	7440-47-32
221.	Chromium (hexavalent)	-
160.	Copper	7440-50-8
161.	Lead	7439-92-1
162.	Mercury	7439-97-6
163.	Nickel	7440-02-0
164	Selenium	7782-49-2
165.	Silver	7440-22-4
166.	Thallium	7440-28-0
167.	Vanadium	7440-62-2
168.	Zinc	7440-66-6
	Inorganics	
169.	Cyanide	57-12-5
170.	Fluoride	16964-48-8
171.	Sulfide	8496-25-8

Table 1-1 (continued)

BDAT reference no	Parameter	CAS no.
	Organochlorine pesticides	
172.	Aldrin	309-00-2
173.	alpha-BHC	319-84-6
174.	beta-BHC	319-85-7
175	delta-BHC	319-86-8
176.	gamma-BHC	58-89-9
177	Chlordane	57-74-9
178	DDD	72-54-8
179	DDE	72-55-9
180	DDT	50-29-3
181.	Dieldrin	60-57-1
182	Endosulfan I	939-98-8
183	Endosulfan II	33213-6-5
184.	Endrin	72-20-8
185.	Endrin aldehyde	7421-93-4
186	Heptachlor	76-44-8
187	Heptachlor epoxide	1024-57-3
188.	Isodrin	465-73-6
189	Kepone	143-50-0
190.	Methoxyclor	72-43-5
191	Toxaphene	8001-35-2
	Phenoxyacetic acid herbicides	
192.	2,4-Dichlorophenoxyacetic acid	94-75-7
193.	Silvex	93-72-1
194.	2,4,5-T	93-76-5
	Organophosphorous insecticides	
195.	Disulfoton	298-04-4
196.	Famphur	52-85-7
197	Methyl parathion	298-00-0
198	Parathion	56-38-2
199.	Phorate	298-02-2
	PCBs	
200.	Aroclor 1016	12674-11-2
201.	Aroclor 1221	11104-28-2
202	Aroclor 1232	11141-16-5

Table 1-1 (continued)

BDAT reference no.	Parameter	CAS no.
	PCBs (continued)	
203.	Aroclor 1242	53469-21-9
204.	Aroclor 1248	12672-29-6
205.	Aroclor 1254	11097-69-1
206.	Aroclor 1260	11096-82-5
	Dioxins and furans	
207.	Hexachlorodibenzo-p-dioxins	-
208.	Hexachlorodibenzofurans	-
209.	Pentachlorodibenzo-p-dioxins	-
210	Pentachlorodibenzofurans	-
211	Tetrachlorodibenzo-p-dioxins	-
212.	Tetrachlorodibenzofurans	-
213.	2,3,7,8-Tetrachlorodibenzo-p-dioxin	1746-01-6

The initial BDAT constituent list was published in EPA's Generic Quality Assurance Project Plan, March 1987 (EPA/530-SW-87-011). Additional constituents will be added to the BDAT constituent list as additional key constituents are identified for specific waste codes or as new analytical methods are developed for hazardous constituents. For example, since the list was published in March 1987, eighteen additional constituents (hexavalent chromium, xylene (all three isomers), benzal chloride, phthalic anhydride, ethylene oxide, acetone, n-butyl alcohol, 2-ethoxyethanol, ethyl acetate, ethyl benzene, ethyl ether, methanol, methyl isobutyl ketone, 2-nitropropane, 1,1,2-trichloro-1,2,2-trifluoroethane, and cyclohexanone) have been added to the list.

Chemicals are listed in Appendix VIII if they are shown in scientific studies to have toxic, carcinogenic, mutagenic, or teratogenic effects on humans or other life-forms, and they include such substances as those identified by the Agency's Carcinogen Assessment Group as being carcinogenic. Including a constituent in Appendix VIII means that the constituent can be cited as a basis for listing toxic wastes.

Although Appendix VII, Appendix VIII, and the F003 and F005 ignitables provide a comprehensive list of RCRA-regulated hazardous constituents, not all of the constituents can be analyzed in a complex waste matrix. Therefore, constituents that could not be readily analyzed in an unknown waste matrix were not included on the initial BDAT list. As mentioned above, however, the BDAT constituent list is a continuously growing list that does not preclude the addition of new constituents when analytical methods are developed.

There are 5 major reasons that constituents were not included on the BDAT constituent list:

(a) Constituents are unstable. Based on their chemical structure, some constituents will either decompose in water or will ionize. For example, maleic anhydride will form maleic acid when it comes in contact with water and copper cyanide will ionize to form copper and cyanide ions. However, EPA may choose to regulate the decomposition or ionization products.

(b) EPA-approved or verified analytical methods are not available. Many constituents, such as 1,3,5-trinitrobenzene, are not measured adequately or even detected using any of EPA's analytical methods published in SW-846 Third Edition.

(c) The constituent is a member of a chemical group designated in Appendix VIII as not otherwise specified (N.O.S.). Constituents listed as N.O.S., such as chlorinated phenols, are a generic group of some types of chemicals for which a single analytical procedure is not available. The individual members of each such group need to be listed to determine whether the constituents can be analyzed. For each N.O.S. group, all those constituents that can be readily analyzed are included in the BDAT constituents list.

(d) Available analytical procedures are not appropriate for a complex waste matrix. Some compounds, such as auramine, can be analyzed as a pure constituent. However, in the presence of other constituents, the recommended analytical method does not positively identify the constituent. The use of high pressure liquid chromotography (HPLC) presupposes a high expectation of finding the specific constituents of interest. In using this procedure to screen samples, protocols would have to be developed on a case-specific basis to verify the identity of constituents present in the samples. Therefore, HPLC is not an appropriate analytical procedure for complex samples containing unkown constituents.

(e) Standards for analytical instrument calibration are not commercially available. For several constituents, such as benz(c)acridine, commercially available standards of a "reasonably" pure grade are not available. The unavailability of a standard was determined by a review of catalogs from specialty chemical manufacturers.

Two constituents (fluoride and sulfide) are not specifically included in Appendices VII and VIII; however, these compounds are included on the BDAT list as indicator constituents for compounds from Appendices VII and VIII such as hydrogen fluoride and hydrogen sulfide, which ionize in water.

The BDAT constituent list presented in Table 1-1 is divided into the following nine groups:

- Volatile organics
- Semivolatile organics
- Metals
- Other inorganics
- Organochlorine pesticides
- Phenoxyacetic acid herbicides
- Organophosphorous insecticides
- PCBs
- Dioxins and furans

The constituents were placed in these categories based on their chemical properties. The constituents in each group are expected to behave similarily during treatment and are also analyzed, with the exception of the metals and inorganics, by using the same analytical methods.

(2) Constituent Selection Analysis. The constituents that the Agency selects for regulation in each treatability group are, in general, those found in the untreated wastes at treatable concentrations. For certain waste codes, the target list for the untreated waste may have been shortened (relative to analyses performed to test treatment technologies) because of the extreme unlikelihood of the constituent being present.

In selecting constituents for regulation, the first step is to summarize all the constituents that were found in the untreated waste at treatable concentrations. This process involves the use of the statistical analysis of variance (ANOVA) test, described in Section 1.2.6, to determine if constituent reductions were significant. The Agency interprets a significant reduction in concentration as evidence that the technology actually "treats" the waste.

There are some instances where EPA may regulate constituents that are not found in the untreated waste but are detected in the treated residual. This is generally the case where presence of the constituents in the untreated waste interferes with the quantification of the constituent of concern. In such instances, the detection levels of the constituent are relatively high, resulting in a finding of "not detected" when, in fact, the constituent is present in the waste.

After determining which of the constituents in the untreated waste are present at treatable concentrations, EPA develops a list of potential constituents for regulation. The Agency then reviews this list to determine if any of these constituents can be excluded from regulation because they would be controlled by regulation of other constituents in the list.

EPA performs this indicator analysis for two reasons: (1) it reduces the analytical cost burdens on the treater and (2) it facilitates implementation of the compliance and enforcement program. EPA's rationale for selection of regulated constituents for this waste code is presented in Section 5 of this background document.

(3) Calculation of Standards. The final step in the calculation of the BDAT treatment standard is the multiplication of the average treatment value by a factor referred to by the Agency as the variability factor. This calculation takes into account that even well-designed and well-operated treatment systems will experience some fluctuations in performance. EPA expects that fluctuations will result from inherent mechanical limitations in treatment control systems, collection of treated samples, and analysis of these samples. All of the above fluctuations can be expected to occur at well-designed and well-operated treatment facilities. Therefore, setting treatment standards utilizing a variability factor should be viewed not as a relaxing of 3004(m) requirements, but rather as a function of the normal variability of the treatment processes. A treatment facility will have to be designed to meet the mean achievable treatment performance level to ensure that the performance levels remain within the limits of the treatment standard.

The Agency calculates a variability factor for each constituent of concern within a waste treatability group using the statistical calculation presented in Appendix A. The equation for calculating the variability factor is the same as that used by EPA for the development of numerous regulations in the Effluent Guidelines Program under the Clean Water Act. The variability factor establishes the instantaneous maximum based on the 99th percentile value.

There is an additional step in the calculation of the treatment standards in those instances where the ANOVA analysis shows that more

than one technology achieves a level of performance that represents BDAT. In such instances, the BDAT treatment standard is calculated by first averaging the mean performance value for each technology for each constituent of concern and then multiplying that value by the highest variability factor among the technologies considered. This procedure ensures that all the BDAT technologies used as the basis for the standards will achieve full compliance.

1.2.5 Compliance with Performance Standards

All the treatment standards reflect performance achieved by the Best Demonstrated Available Technology (BDAT). As such, compliance with these standards only requires that the treatment level be achieved prior to land disposal. It does not require the use of any particular treatment technology. While dilution of the waste as a means to comply with the standard is prohibited, wastes that are generated in such a way as to naturally meet the standard can be land disposed without treatment. With the exception of treatment standards that prohibit land disposal, all treatment standards proposed are expressed as a concentration level.

EPA has used both total constituent concentration and TCLP analyses of the treated waste as a measure of technology performance. EPA's rationale for when each of these analytical tests is used is explained in the following discussion.

For all organic constituents, EPA is basing the treatment standards on the total constituent concentration found in the treated waste. EPA based its decision on the fact that technologies exist to destroy the

various organics compounds. Accordingly, the best measure of performance would be the extent to which the various organic compounds have been destroyed or the total amount of constituent remaining after treatment. (NOTE: EPA's land disposal restrictions for solvent waste codes F001-F005 (51 FR 40572) uses the TCLP value as a measure of performance. At the time that EPA promulgated the treatment standards for F001-F005, useful data were not available on total constituent concentrations in treated residuals and, as a result, the TCLP data were considered to be the best measure of performance.)

For all metal constituents, EPA is using both total constituent concentration and/or the TCLP as the basis for treatment standards. The total constituent concentration is being used when the technology basis includes a metal recovery operation. The underlying principle of metal recovery is the reduction of the amount of metal in a waste by separating the metal for recovery; therefore, total constituent concentration in the treated residual is an important measure of performance for this technology. Additionally, EPA also believes that it is important that any remaining metal in a treated residual waste not be in a state that is easily leachable; accordingly, EPA is also using the TCLP as a measure of performance. It is important to note that for wastes for which treatment standards are based on a metal recovery process, the facility has to comply with both the total constituent concentration and the TCLP prior to land disposal.

In cases where treatment standards for metals are not based on recovery techniques but rather on stabilization, EPA is using only the TCLP as a measure of performance. The Agency's rationale is that stabilization is not meant to reduce the concentration of metal in a waste but only to chemically minimize the ability of the metal to leach.

1.2.6 Identification of BDAT

(1) Screening of Treatment Data. This section explains how the Agency determines which of the treatment technologies represent treatment by BDAT. The first activity is to screen the treatment performance data from each of the demonstrated and available technologies according to the following criteria:

(a) Design and operating data associated with the treatment data must reflect a well-designed, well-operated system for each treatment data point. (The specific design and operating parameters for each demonstrated technology for this waste code are discussed in Section 3.4 of this document.)

(b) Sufficient QA/QC data must be available to determine the true values of the data from the treated waste. This screening criterion involves adjustment of treated data to take into account that the type value may be different from the measured value. This discrepancy generally is caused by other constituents in the waste that can mask results or otherwise interfere with the analysis of the constituent of concern.

(c) The measure of performance must be consistent with EPA's approach to evaluating treatment by type of constituents (e.g., total concentration data for organics, and total concentration and TCLP for metals in the leachate from the residual).

In the absence of data needed to perform the screening analysis, EPA will make decisions on a case-by-case basis of whether to include the data. The factors included in this case-by-case analysis will be the

actual treatment levels achieved, the availability of the treatment data and their completeness (with respect to the above criteria), and EPA's assessment of whether the untreated waste represents the waste code of concern. EPA's application of these screening criteria for this waste code are provided in Section 4 of this background document.

(2) Comparison of Treatment Data. In cases in which EPA has treatment data from more than one technology following the screening activity, EPA uses the statistical method known as analysis of variance (ANOVA) to determine if one technology performs significantly better. This statistical method (summarized in Appendix A) provides a measure of the differences between two data sets. If EPA finds that one technology performs significantly better (i.e., the data sets are not homogeneous), BDAT treatment standards are the level of performance achieved by the best technology multiplied by the corresponding variability factor for each regulated constituent.

If the differences in the data sets are not statistically significant, the data sets are said to be homogeneous. Specifically, EPA uses the analysis of variance to determine whether BDAT represents a level of performance achieved by only one technology or represents a level of performance achieved by more than one (or all) of the technologies. If the Agency finds that the levels of performance for one or more technologies are not statistically different, EPA averages the performance values achieved by each technology and then multiplies this value by the largest variability factor associated with any of the

acceptable technologies. A detailed discussion of the treatment selection method and an example of how EPA chooses BDAT from multiple treatment systems is provided in Section A-1.

(3) Quality Assurance/Quality Control. This section presents the principal quality assurance/quality control (QA/QC) procedures employed in screening and adjusting the data to be used in the calculation of treatment standards. Additional QA/QC procedures used in collecting and screening data for the BDAT program are presented in EPA's Generic Quality Assurance Project Plan for Land Disposal Restrictions Program ("BDAT") (EPA/530-SW-87-001, March 1987).

To calculate the treatment standards for the Land Disposal Restriction Rules, it is first necessary to determine the recovery value for each constituent (the amount of constituent recovered after spiking, which is the addition of a known amount of the constituent, minus the initial concentration in the samples divided by the amount added) for a spike of the treated residual. Once the recovery value is determined, the following procedures are used to select the appropriate percent recovery value to adjust the analytical data:

(a) If duplicate spike recovery values are available for the constituent of interest, the data are adjusted by the lowest available percent recovery value (i.e., the value that will yield the most conservative estimate of treatment achieved). However, if a spike recovery value of less than 20 percent is reported for a specific constituent, the data are not used to set treatment standards because the Agency does not have sufficient confidence in the reported value to set a national standard.

(b) If data are not available for a specific constituent but are available for an isomer, then the spike recovery data are transferred from the isomer and the data are adjusted using the percent recovery selected according to the procedure described in (a) above.

(c) If data are not available for a specific constituent but are available for a similar class of constituents (e.g., volatile organics, acid-extractable semivolatiles), then spike recovery data available for this class of constituents are transferred. All spike recovery values greater than or equal to 20 percent for a spiked sample are averaged and the constituent concentration is adjusted by the average recovery value. If spiked recovery data are available for more than one sample, the average is calculated for each sample and the data are adjusted by the lowest average value.

(d) If matrix spike recovery data are not available for a set of data to be used to calculate treatment standards, then matrix spike recovery data are transferred from a waste that the Agency believes is a similar matrix (e.g., if the data are for an ash from incineration, then data from other incinerator ashes could be used). While EPA recognizes that transfer of matrix spike recovery data from a similar waste is not an exact analysis, this is considered the best approach for adjusting the data to account for the fact that most analyses do not result in extraction of 100 percent of the constituent. In assessing the recovery data to be transferred, the procedures outlined in (a), (b), and (c) above are followed.

The analytical procedures employed to generate the data used to calculate the treatment standards are listed in Appendix D of this document. In cases where alternatives or equivalent procedures and/or equipment are allowed in EPA's SW-846, Third Edition (November 1986) methods, the specific procedures and equipment used are also documented in this Appendix. In addition, any deviations from the SW-846, Third Edition, methods used to analyze the specific waste matrices are documented. It is important to note that the Agency will use the methods and procedures delineated in Appendix D to enforce the treatment

standards presented in Section 6 of this document. Accordingly, facilities should use these procedures in assessing the performance of their treatment systems.

1.2.7 BDAT Treatment Standards for "Derived-From" and "Mixed" Wastes

(1) Wastes from Treatment Trains Generating Multiple Residues. In a number of instances, the proposed BDAT consists of a series of operations each of which generates a waste residue. For example, the proposed BDAT for a certain waste code is based on solvent extraction, steam stripping, and activated carbon adsorption. Each of these treatment steps generates a waste requiring treatment -- a solvent-containing stream from solvent extraction, a stripper overhead, and spent activated carbon. Treatment of these wastes may generate further residues; for instance, spent activated carbon (if not regenerated) could be incinerated, generating an ash and possibly a scrubber water waste. Ultimately, additional wastes are generated that may require land disposal. With respect to these wastes, the Agency wishes to emphasize the following points:

(a) All of the residues from treating the original listed wastes are likewise considered to be the listed waste by virtue of the derived-from rule contained in 40 CFR Part 261.3(c)(2). (This point is discussed more fully in (2) below.) Consequently, all of the wastes generated in the course of treatment would be prohibited from land disposal unless they satisfy the treatment standard or meet one of the exceptions to the prohibition.

(b) The Agency's proposed treatment standards generally contain a concentration level for wastewaters and a concentration level for nonwastewaters. The treatment standards apply to all of the wastes generated in treating the original prohibited waste. Thus, all solids generated from treating these wastes would have

to meet the treatment standard for nonwastewaters. All derived-from wastes meeting the Agency definition of wastewater (less than 1 percent TOC and less than 1 percent total filterable solids) would have to meet the treatment standard for wastewaters. EPA wishes to make clear that this approach is not meant to allow partial treatment in order to comply with the applicable standard.

(c) The Agency has not performed tests, in all cases, on every waste that can result from every part of the treatment train. However, the Agency's treatment standards are based on treatment of the most concentrated form of the waste. Consequently, the Agency believes that the less concentrated wastes generated in the course of treatment will also be able to be treated to meet this value.

(2) Mixtures and Other Derived-From Residues. There is a further question as to the applicability of the BDAT treatment standards to residues generated not from treating the waste (as discussed above), but from other types of management. Examples are contaminated soil or leachate that is derived from managing the waste. In these cases, the mixture is still deemed to be the listed waste, either because of the derived-from rule (40 CFR Part 261.3(c)(2)(i)) or the mixture rule (40 CFR Part 261.3(a)(2)(iii) and (iv) or because the listed waste is contained in the matrix (see, for example, 40 CFR Part 261.33(d)). The prohibition for the particular listed waste consequently applies to this type of waste.

The Agency believes that the majority of these types of residues can meet the treatment standards for the underlying listed wastes (with the possible exception of contaminated soil and debris for which the Agency is currently investigating whether it is appropriate to establish a separate treatability subcategorization). For the most part, these

residues will be less concentrated than the original listed waste. The Agency's treatment standards also make a generous allowance for process variability by assuming that all treatability values used to establish the standard are lognormally distributed. The waste also might be amenable to a relatively nonvariable form of treatment technology such as incineration. Finally, and perhaps most important, the rules contain a treatability variance that allows a petitioner to demonstrate that its waste cannot be treated to the level specified in the rule (40 CFR Part 268.44(a). This provision provides a safety valve that allows persons with unusual waste matrices to demonstrate the appropriateness of a different standard. The Agency, to date, has not received any petitions under this provision (for example, for residues contaminated with a prohibited solvent waste), indicating, in the Agency's view, that the existing standards are generally achievable.

(3) Residues from Managing Listed Wastes or that Contain Listed Wastes. The Agency has been asked if and when residues from managing hazardous wastes, such as leachate and contaminated ground water, become subject to the land disposal prohibitions. Although the Agency believes this question to be settled by existing rules and interpretative statements, to avoid any possible confusion the Agency will address the question again.

Residues from managing First Third wastes, listed California List wastes, and spent solvent and dioxin wastes are all considered to be subject to the prohibitions for the underlying hazardous waste. Residues

from managing California List wastes likewise are subject to the California List prohibitions when the residues themselves exhibit a characteristic of hazardous waste. This determination stems directly from the derived-from rule in 40 CFR Part 261.3(c)(2) or in some cases from the fact that the waste is mixed with or otherwise contains the listed waste. The underlying principle stated in all of these provisions is that listed wastes remain listed until delisted.

The Agency's historic practice in processing delisting petitions addressing mixing residuals has been to consider them to be the listed waste and to require that delisting petitioners address all constituents for which the derived-from waste (or other mixed waste) was listed. The language in 40 CFR Part 260.22(b) states that mixtures or derived-from residues can be delisted provided a delisting petitioner makes a demonstration identical to that which a delisting petitioner would make for the underlying waste. These residues consequently are treated as the underlying listed waste for delisting purposes. The statute likewise takes this position, indicating that soil and debris that are contaminated with listed spent solvents or dioxin wastes are subject to the prohibition for these wastes even though these wastes are not the originally generated waste, but rather are a residual from management (RCRA section 3004(e)(3)). It is EPA's view that all such residues are covered by the existing prohibitions and treatment standards for the listed hazardous waste that these residues contain and from which they are derived.

1.2.8 Transfer of Treatment Standards

EPA is proposing some treatment standards that are not based on testing of the treatment technology of the specific waste subject to the treatment standard. Instead, the Agency has determined that the constituents present in the subject waste can be treated to the same performance levels as those observed in other wastes for which EPA has previously developed treatment data. EPA believes that transferring treatment performance for use in establishing treatment standards for untested wastes is valid technically in cases where the untested wastes are generated from similar industries, similar processing steps, or have similar waste characteristics affecting performance and treatment selection. Transfer of treatment standards to similar wastes or wastes from similar processing steps requires little formal analysis. However, in the case where only the industry is similar, EPA more closely examines the waste characteristics prior to concluding that the untested waste constituents can be treated to levels associated with tested wastes.

EPA undertakes a two-step analysis when determining whether wastes generated by different processes within a single industry can be treated to the same level of performance. First, EPA reviews the available waste characteristic data to identify those parameters that are expected to affect treatment selection. EPA has identified some of the most important constituents and other parameters needed to select the treatment technology appropriate for a given waste. A detailed discussion of each analysis, including how each parameter was selected for each waste, can be found in the background document for each waste.

Second, when an individual analysis suggests that an untested waste can be treated with the same technology as a waste for which treatment performance data are already available, EPA analyzes a more detailed list of constituents that represent some of the most important waste characteristics that the Agency believes will affect the performance of the technology. By examining and comparing these characteristics, the Agency determines whether the untested wastes will achieve the same level of treatment as the tested waste. Where the Agency determines that the untested waste is easier to treat than the tested waste, the treatment standards can be transferred. A detailed discussion of this transfer process for each waste can be found in later sections of this document.

1.3 Variance from the BDAT Treatment Standard

The Agency recognizes that there may exist unique wastes that cannot be treated to the level specified as the treatment standard. In such a case, a generator or owner/operator may submit a petition to the Administrator requesting a variance from the treatment standard. A particular waste may be significantly different from the wastes considered in establishing treatability groups because the waste contains a more complex matrix that makes it more difficult to treat. For example, complex mixtures may be formed when a restricted waste is mixed with other waste streams by spills or other forms of inadvertent mixing. As a result, the treatability of the restricted waste may be altered such that it cannot meet the applicable treatment standard.

Variance petitions must demonstrate that the treatment standard established for a given waste cannot be met. This demonstration can be

made by showing that attempts to treat the waste by available technologies were not successful or by performing appropriate analyses of the waste, including waste characteristics affecting performance, which demonstrate that the waste cannot be treated to the specified levels. Variances will not be granted based solely on a showing that adequate BDAT treatment capacity is unavailable. (Such demonstrations can be made according to the provisions in Part 268.5 of RCRA for case-by-case extensions of the effective date.) The Agency will consider granting generic petitions provided that representative data are submitted to support a variance for each facility covered by the petition.

Petitioners should submit at least one copy to:

The Administrator
U.S. Environmental Protection Agency
401 M Street, S.W.
Washington, DC 20460

An additional copy marked "Treatability Variance" should be submitted to:

Chief, Waste Treatment Branch
Office of Solid Waste (WH-565)
U.S. Environmental Protection Agency
401 M Street, S.W.
Washington, DC 20460

Petitions containing confidential information should be sent with only the inner envelope marked "Treatability Variance" and "Confidential Business Information" and with the contents marked in accordance with the requirements of 40 CFR Part 2 (41 FR 36902, September 1, 1976, amended by 43 FR 4000).

The petition should contain the following information:

(1) The petitioner's name and address.

(2) A statement of the petitioner's interest in the proposed action.

(3) The name, address, and EPA identification number of the facility generating the waste, and the name and telephone number of the plant contact.

(4) The process(es) and feed materials generating the waste and an assessment of whether such process(es) or feed materials may produce a waste that is not covered by the demonstration.

(5) A description of the waste sufficient for comparison with the waste considered by the Agency in developing BDAT, and an estimate of the average and maximum monthly and annual quantities of waste covered by the demonstration. (Note: The petitioner should consult the appropriate BDAT background document for determining the characteristics of the wastes considered in developing treatment standards.)

(6) If the waste has been treated, a description of the system used for treating the waste, including the process design and operating conditions. The petition should include the reasons the treatment standards are not achievable and/or why the petitioner believes the standards are based on inappropriate technology for treating the waste. (Note: The petitioner should refer to the BDAT background document as guidance for determining the design and operating parameters that the Agency used in developing treatment standards.)

(7) A description of the alternative treatment systems examined by the petitioner (if any); a description of the treatment system deemed appropriate by the petitioner for the waste in question; and, as appropriate, the concentrations in the treatment residual or extract of the treatment residual (i.e., using the TCLP where appropriate for stabilized metals) that can be achieved by applying such treatment to the waste.

(8) A description of those parameters affecting treatment selection and waste characteristics that affect performance, including results of all analyses. (See Section 3.0 for a discussion of waste characteristics affecting performance that the Agency has identified for the technology representing BDAT.)

(9) The dates of the sampling and testing.

(10) A description of the methodologies and equipment used to obtain representative samples.

(11) A description of the sample handling and preparation techniques, including techniques used for extraction, containerization, and preservation of the samples.

(12) A description of analytical procedures used including QA/QC methods.

After receiving a petition for a variance, the Administrator may request any additional information or waste samples that may be required to evaluate and process the petition. Additionally, all petitioners must certify that the information provided to the Agency is accurate under 40 CFR Part 268.4(b).

In determining whether a variance will be granted, the Agency will first look at the design and operation of the treatment system being used. If EPA determines that the technology and operation are consistent with BDAT, the Agency will evaluate the waste to determine if the waste matrix and/or physical parameters are such that the BDAT treatment standards reflect treatment of this waste. Essentially, this latter analysis will concern the parameters affecting treatment selection and waste characteristics affecting performance parameters.

In cases where BDAT is based on more than one technology, the petitioner will need to demonstrate that the treatment standard cannot be met using any of the technologies, or that none of the technologies are appropriate for treatment of the waste. After the Agency has made a determination on the petition, the Agency's findings will be published in the Federal Register, followed by a 30-day period for public comment.

After review of the public comments, EPA will publish its final determination in the Federal Register as an amendment to the treatment standards in 40 CFR Part 268, Subpart D.

2.0 INDUSTRY AFFECTED AND WASTE CHARACTERIZATION

As described in Section 1.0, the Hazardous and Solid Waste Amendments (HSWA) specify dates when particular groups of hazardous wastes are prohibited from land disposal. The amendments also require the Environmental Protection Agency to establish treatment standards for each waste that, when met, allow that waste to be land disposed. Wastes generated by the refining industry are part of the first third of listed wastes to be evaluated by the Agency. The purpose of this section is to describe the industry affected by the land disposal restrictions for petroleum refining wastes and to present available characterization data for these wastes.

Under 40 CFR 261.32 (hazardous wastes from specific sources), wastes identified as K048, K049, K050, K051, and K052 are specifically generated by the petroleum refining industry and are listed as follows:

- K048: Dissolved air flotation (DAF) float from the petroleum refining industry;
- K049: Slop oil emulsion solids from the petroleum refining industry;
- K050: Heat exchanger bundle cleaning sludge from the petroleum refining industry;
- K051: API separator sludge from the petroleum refining industry; and
- K052: Tank bottoms (leaded) from the petroleum refining industry.

The Agency has determined that these wastes (K048-K052) represent a separate waste treatability group based on their similar physical and chemical

characteristics. Additionally, the Agency expects that these wastes will typically be mixed prior to treatment. As a result, EPA examined the specific similarities in waste composition, applicable and demonstrated treatment technologies, and attainable treatment performance in order to support a single regulatory approach for all five petroleum refinery wastes.

2.1 Industry Affected and Process Description

Under 40 CFR 261.32 (hazardous wastes from specific sources) wastes identified as K048, K049, K050, K051, and K052 are specifically generated by the petroleum refining industry. The four digit standard industrial classification (SIC) code most often reported for the petroleum refining industry is 2911. The Agency estimates that there are approximately 193 facilities that may produce the listed wastes K048, K049, K050, K051 and K052. Information from trade associations provides a geographic distribution of the number of petroleum refineries across the United States. Table 2-1 lists the number of facilities by state. Table 2-2 summarizes the number of facilities for each EPA region. Figure 2-1 illustrates this data geographically on a map of the United States.

The petroleum refining industry consists of individual facilities that convert crude oil into numerous products including gasoline, kerosene, fuel oils, lubricating oils, petrochemical feedstocks, and miscellaneous byproducts. Petroleum refineries range in complexity and size from small plants with tens of employees to some of the largest industrial complexes in

Table 2-1

FACILITIES PRODUCING K048-K052 WASTES BY STATE

State (EPA Region)	Number of Facilities	State (EPA Region)	Number of Facilities
Alabama (IV)	2	Montana (VIII)	5
Alaska (X)	6	Nebraska (VII)	0
Arizona (IX)	1	Nevada (IX)	1
Arkansas (VI)	4	New Hampshire (I)	0
California (IX)	29	New Jersey (II)	6
Colorado (VIII)	2	New Mexico (VI)	3
Connecticut (I)	0	New York (II)	0
Delaware (III)	1	North Carolina (IV)	0
Washington, DC (III)	0	North Dakota (VIII)	2
Florida (IV)	1	Ohio (V)	5
Georgia (IV)	2	Oklahoma (VI)	6
Hawaii (IX)	2	Oregon (X)	1
Idaho (X)	0	Pennsylvania (III)	8
Illinois (V)	7	Puerto Rico (II)	1
Indiana (V)	4	Rhode Island (I)	0
Iowa (VII)	0	South Carolina (IV)	0
Kansas (VII)	7	South Dakota (VIII)	0
Kentucky (IV)	2	Tennessee (IV)	1
Louisiana (VI)	18	Texas (VI)	31
Maine (I)	0	Utah (VIII)	6
Maryland (III)	0	Vermont (I)	0
Massachusetts (I)	0	Virginia (III)	1
Michigan (V)	4	Virgin Islands (II)	1
Minnesota (V)	2	Washington (X)	7
Mississippi (IV)	5	West Virginia (III)	2
Missouri (VII)	0	Wisconsin (V)	1
		Wyoming (VIII)	6

Reference: Cantrell, Ailleen. "Annual Refining Survey." Oil and Gas Journal. Vol. 83, No. 13. March 30, 1987.

Table 2-2

FACILITIES PRODUCING K048-K052 WASTES BY EPA REGION

Totals by Region	
EPA Region	Number of Facilities
I	0
II	8
III	12
IV	13
V	23
VI	62
VII	7
VIII	21
IX	33
X	14
TOTAL	193

Reference: Cantrell, Ailleen. "Annual Refining Survey." Oil and Gas Journal. Vol. 83, No. 13. March 30, 1987.

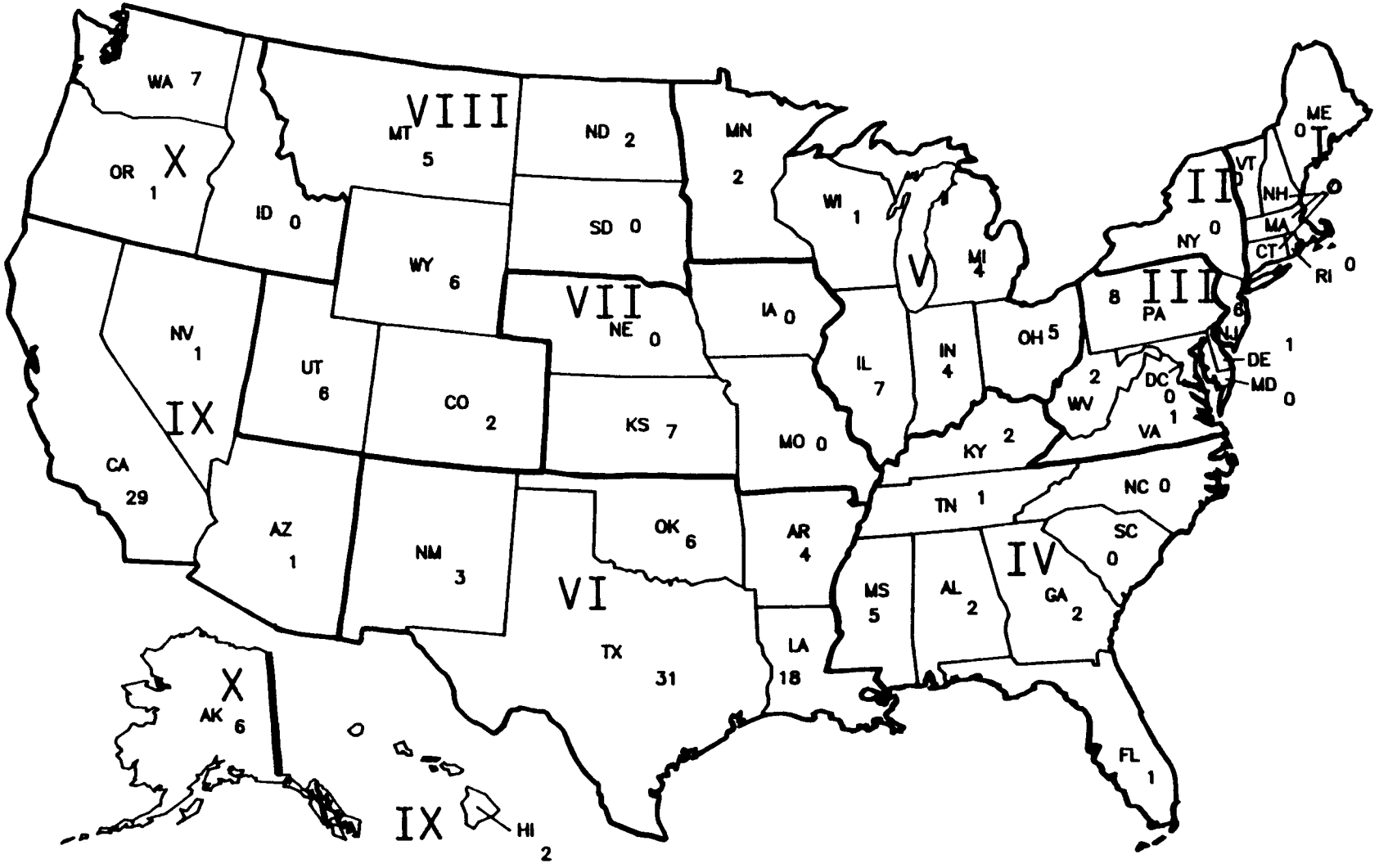

FIGURE 2-1

FACILITIES PRODUCING K048-K052 WASTES BY STATE AND EPA REGION

the United States. A number of unit operations are used in the refining of crude oil. The unit operations employed at an individual refinery depend upon the type of crude oil processed; the size, location, and age of the facility; and the market for the petroleum products.

The initial processing unit operation at a refinery and the only unit operation that is used at every refinery is distillation of the crude oil. Distillation separates the raw material (crude oil) into several streams with different boiling point ranges, including light gaseous streams, gasoline, diesel oil, furnace oil, and heavy ends. Generally, the different streams are further processed to produce finished petroleum products.

The light gaseous streams are usually burned in process heaters or boilers to provide heat or steam for the refinery. The heavier gaseous products, propane and butane, are liquified and sold as products. The gasoline stream is further treated at the refinery to improve its octane rating to allow it to be burned in modern automobile engines. Downstream unit operations such as isomerization or catalytic reforming are used to increase the octane rating to the desired specifications. The diesel and furnace oil streams are processed to remove undesirable sulfur compounds. The heavier or higher boiling streams can either be processed into lighter products or made into lubricating or specialty oils. Fluid catalytic cracking units, hydrogen cracking units, and coking units can be used to convert the heavier distillation products into gases, gasolines, fuel oils, and petroleum coke. For production of lubricating oils, the heavy distillation products are dewaxed,

solvent-refined, or hydrogen-treated. It is possible to make a wide range of miscellaneous products at a petroleum refinery, including aromatic organic compounds (benzene, toluene, and xylene), greases, waxes, and asphalt. Many additional unit operations (separation steps) are required to manufacture this wide variety of products.

Wastes are generated by the various operations conducted by the refining industry. The generation of K048-K052 is depicted in Figure 2-2.

Wastewaters are generated throughout the refining process and are commonly treated at wastewater treatment facilities within the refineries. The listed wastes K048, K049, and K051 are generated as residuals from wastewater treatment operations. A list of unit operations typically found in the petroleum refining industry and the types of wastewater generated by these operations is presented in Table 2-3. In distillation operations, steam is sometimes injected into the columns to facilitate the separation. The condensed steam forms a wastewater stream containing oil. Steam is also used to produce the vacuum conditions under which some unit operations are conducted. Again, the steam condenses to form a wastewater in which oil is a contaminant. Another source of wastewater is the water that is present in the crude oil when it arrives at the refinery. These sources of wastewater, along with any cooling water that contains oil, make up most of the flow to a refinery's wastewater treatment plant.

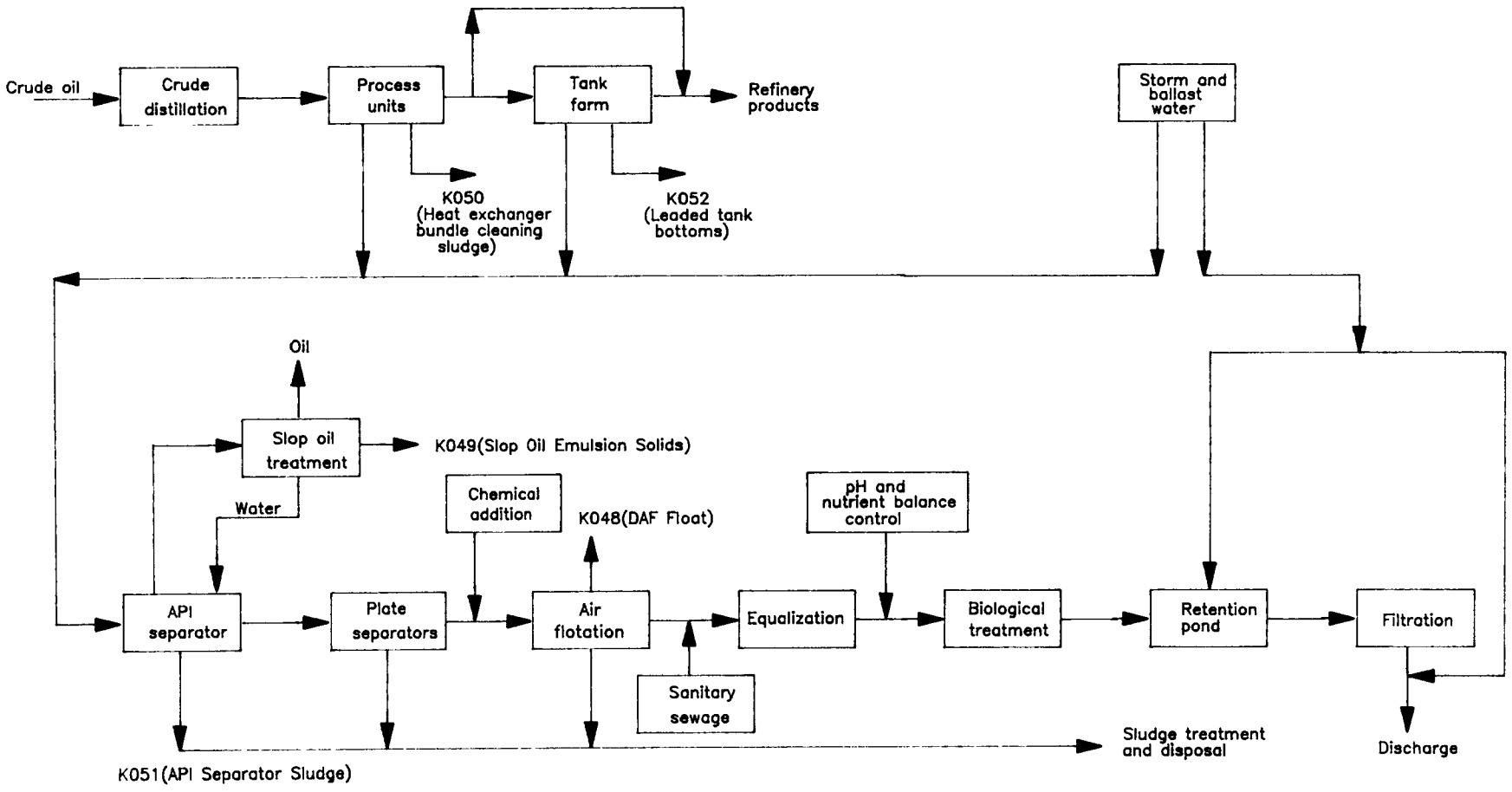

Figure 2–2

Generation of K048, K049, K050, K051 and K052

Table 2-3

GENERATION OF WASTEWATERS IN THE PETROLEUM REFINING INDUSTRY

Unit operation	Function	Waste generated
Desalting	Reduce inorganic salts and and suspended solids in crude to prevent fouling of equipment; remove inorganic impurities that poison catalysts	Desalting sludge; desalter brine
Fractionation: vacuum, atmospheric flash, distillation	Separate constituents of crude oil	Wastewater from overhead accumulators; discharge from oil sampling lines; oil emulsions from condensers; barometric condenser water
Cracking: catalytic, visbreaking, thermal, hydrocracking	Convert heavy oil fractions into lighter oil fractions	Wastewater from overhead accumulators and steam strippers
Reforming	Convert naphthas to finished high-octane gasoline	Wastewater from overhead accumulators on stripping towers.
Alkylation	Convert gaseous hydrocarbons to high-octane fuel	Wastewater from overhead accumulators in fractionation section; alkylation reactor; caustic wash
Hydrotreating	Saturate olefins and remove contaminants such as sulfur, nitrogen and oxygen compounds,	Wastewater from overhead accumulators on fractionators and steam strippers; sour water stripper bottoms
Polymerization	Convert olefins to high-octane gasoline	Wastewater from caustic scrubbers and pretreatment washwater towers
Isomerization	Convert light gasoline materials into high-octane isomers for fuel	Wastewater from leaks and spills

Table 2-3 (continued)

GENERATION OF WASTEWATERS IN THE PETROLEUM REFINING INDUSTRY

Unit operation	Function	Waste generated
Solvent refining and extraction of oil stocks	Obtain lube oil fractions and aromatics from feedstocks containing hydrocarbons and undesirable materials	Wastewater from bottom of fractionation towers
Dewaxing	Remove wax from lube oil stocks to produce products with low pour points and to recover wax for further processing	Wastewater from leaks and spills
Coking	Convert heavy oil fractions into lighter oil fractions and into solid petroleum coke	Cutting water blowdown; fractionation section overhead accumulator waters
Aromatic extraction	Recovery of benzene, toluene, and xylene from gasoline stocks	Wastewater from overhead accumulator on stripping towers and condensers
Deasphalting	Separate asphalts or resins from vacuum distillation residuals; recover paraffinic catalytic cracking stock from distillation residuals	Sour water from overhead condensers on steam strippers; spills
Drying and sweetening	Remove sulfur compounds; improve color, odor; oxidation stability; inhibitor response; remove water, carbon dioxide, and other impurities	Spent caustic; wastewater from water washing of treated product; regeneration of treating solution
Grease manufacture	Produce wide range of lubricating greases	Wastewater from leaks and washing of batch process units
Lubricating oil finishing	Produce motor oils and lubricating greases	Wastewater from rinses and clay treatment; sludge from sampling; leaks
Hydrogen manufacture	Produce hydrogen needed for refining processes	Wastewater from desulfurization unit

Table 2-3 (continued)

GENERATION OF WASTEWATERS IN THE PETROLEUM REFINING INDUSTRY

Unit operation	Function	Waste generated
Storage tanks	Storage of crude oil, intermediates, and final products	Settled water and sludge from tank bottoms and cleaning
Sulfur recovery	Removal of sulfur compounds from hydrocarbon streams and recovery of sulfur product	Spent caustics; spent amine solution; spent stretford solution
Blending and packaging	Produce and package final products	Wastewater from tank wash; vessel cleaning water
Cooling water system	Heat exchanger operation	Blowdown from cooling tower systems; once-through cooling water
Surface and storm water collection	Treatment of storm and surface drainage	Wastewater from storm and surface drainage
Utilities	Steam and electricity generation	Boiler blowdown
Marine terminals	Load and unload marine vessels with crude oil and refined products	Ballast water
General wastewaters	Maintenance	Wash water; pump gland water; leaks and spills on every operation

Sources:

Jacobs Engineering Company, Assessment of Hazardous Waste Management, 1967 (Reference 3).
Jones, H.R. Pollution Control (Reference 11)
Gloyna and Ford, Characteristics and Pollutional Problems (Reference 12).

Some basic wastewater treatment operations are common to most wastewater treatment facilities within petroleum refineries. Oil and solids are separated from the wastewater in gravity separators. Operations such as air flotation can be used to further enhance oil removal from wastewater. Aeration and biological activity are then used to reduce the organic content of the waste, and filtration can be used to remove any suspended solids.

Dissolved air flotation (DAF) is used by petroleum refineries for separating suspended and colloidal materials from process wastewater. The DAF unit separates oily wastes and suspended solids from water by introducing tiny air bubbles into the water. The bubbles become attached to the oil droplets and suspended solids that are dispersed through the wastewater. The resultant oil/air bubbles rise through the wastewater and collect on the water's surface, where they are removed by surface-skimming devices. The material skimmed from the surface, referred to as "DAF float" is the listed waste K048. Some settling of solids in the DAF unit may occur resulting in the generation of a solids residual during unit cleanout.

Process wastewater from refining operations is in many cases treated in an oil/water/solids separator where the waste separates by gravity into a multiphase mixture. The skimmings from the primary separator generally consist of a three-phase mixture of water, oil, and an emulsified (inseparable) layer. These skimmings are collected in a "slop oil system" where the three phases are separated. The emulsified layer is the listed waste K049.

Heat exchangers are utilized throughout petroleum refining processes. Bundles (groupings of tubes) from these heat exchangers are periodically cleaned to remove deposits of scale and sludge. Depending upon the characteristics of the deposits, the outsides of the tube bundles may be washed, brushed, or sandblasted, while the tube insides can be wiped, brushed, or rodded out. The solids or sludge resulting from this cleaning operation forms the listed waste K050.

API separators are used in petroleum refining operations to remove floating oil and suspended solids from the wastewater. In an API separator, oily wastewater enters one end of a rectangular channel, flows through the length of the channel, and discharges at the other end. A sufficient residence time is provided to allow oil droplets to float and coalesce at the surface of the wastewater. An oil skimmer is provided near the end of the separator to collect floating oil. Solids that have settled out of the water are scraped along the channel bottom to a sludge collecting hopper. The API separator sludge is the listed waste K051.

Leaded petroleum products are stored in tanks after being separated in distillation columns. As cooling occurs, water separates from the hydrocarbon phase and is drained into the refinery wastewater system. Solids form as corrosion products in the storage tank. These solids are periodically removed during tank cleaning, generating the listed waste K052.

2.2 Waste Characterization

The approximate concentrations of major constituents comprising K048-K052 wastes are included in the following table. The percent concentrations in the wastes were estimated using available chemical analyses. Calculations supporting these estimates are presented in Appendix B.

	Concentration				
Constituent	K048	K049	K050	K051	K052
Water	81	50	44	60	18
Oil and grease	12	37	7	17	12
Dirt, sand, and other solids	6	12	48	22	69
BDAT List constituents	<1	<1	<1	<1	<1
Total	100%	100%	100%	100%	100%

BDAT List constituents (organics and inorganics) cumulatively comprise less than one percent of each waste stream. Tables 2-4 through 2-8 present, by waste code, the ranges of BDAT List constituents (volatiles, semivolatiles, metals, and other inorganics) and other parameters identified as present in the waste. These data were obtained from a variety of sources including literature, and sampling and analysis episodes. Each waste contains mono- and poly-nuclear aromatic compounds such as toluene, xylene, phenol, naphthalene, phenanthrene, and pyrene. The wastes also contain metals including arsenic, chromium, lead, nickel, selenium, vanadium, and zinc. Additionally, the wastes are characterized by high concentrations of filterable solids.

2.3 Determination of Waste Treatability Group

Fundamental to waste treatment is the concept that the type of treatment technology used and the level of treatment achieved depend on the

physical and chemical characteristics of the waste. In cases where EPA believes that constituents present in wastes represented by different codes can be treated to similar concentrations by using the same technologies, the Agency combines the codes into one treatability group. The five listed wastes from the petroleum refining industry (K048-K052) are generated by the treatment of refinery process wastewaters, from heat exchanger cleaning, and from product storage operations.

Based on a careful review of the generation of these wastes and all available data characterizing these wastes, the Agency has determined that these wastes (K048-K052) represent a separate waste treatability group, due to the fact that all of these wastes are generated by the refining process, and the belief that constituents present in these wastes can be treated to similar concentrations using the same technologies. Specifically, K049 waste (slop oil emulsion solids) is generated by the treatment of refinery process wastewaters as are K048 (DAF float) and K051 (API separator sludge). K050 waste (heat exchanger bundle cleaning sludge) is generated within a refinery by the cleaning of heat exchangers. Heat exchangers are used throughout the refining process to provide the heat exchange between refinery process streams. K052 waste (leaded tank bottoms) is generated within a refinery by the storage of leaded petroleum products. These refinery process wastes contain the same types of constituents, as shown on Tables 2-2 and 2-4 through 2-8, and are expected to be treatable to similar levels using the same technology.

The wastes in this treatability group are comprised of water, oil and grease, dirt, sand, and other solids, and organic and metal BDAT List

constituents. Typically, organic constituents present in these wastes are mono- and poly-nuclear aromatic compounds such as toluene, xylene, phenol, naphthalene, phenanthrene, and pyrene. Metal constituents present in these wastes include arsenic, chromium, lead, nickel, selenium, vanadium, and zinc. Although the concentrations of specific constituents will vary from facility to facility, all of the wastes contain similar levels of BDAT organics and metals and have high filterable solids content. Additionally, the Agency expects that these wastes will typically be mixed and treated together in the same treatment system. As a result, EPA has examined the sources and characteristics of the wastes, applicable technologies, and attainable treatment performance in order to support a single regulatory approach for these five refinery wastes.

Table 2-4

AVAILABLE CHARACTERIZATION DATA FOR K048

		Untreated waste concentration, (ppm)						
	Source of Data:	(a)	(b)	(c)	(d)	(e)	(f)	Range
	BDAT ORGANICS							
	Volatiles							
21.	Dichlorodifluoromethane	<14-310	-	-	-	-	-	<14-310
226.	Ethyl benzene	<14-120	-	-	-	-	-	<14-120
43.	Toluene	22-120	-	-	-	-	-	22-120
215-217.	Xylene (total)	<14-120	-	-	-	-	-	<14-120
	Semivolatiles							
62.	Benzo(a)pyrene	<20	0.004-1.75	-	-	-	-	0.004-<20
70.	Bis(2-ethylhexyl)phthalate	<20-59	-	-	-	-	-	<20-59
80.	Chrysene	<20-22	-	-	-	-	-	<20-22
98.	Di-n-butylphthalate	67-190	-	-	-	-	-	67-190
109.	Fluorene	31-32	-	-	-	-	-	31-32
121.	Naphthalene	93-110	-	-	-	-	-	93-110
141.	Phenathrene	77-86	-	-	-	-	-	77-86
142.	Phenol	<20	3.0-210	-	-	-	-	3.0-210
145.	Pyrene	31-35	-	-	-	-	-	31-35
	BDAT METALS							
154.	Antimony	<6-7	-	-	-	-	-	<6-7
155.	Arsenic	4.9-6.1	0.05-10.5	<3.0	-	-	-	0.05-10.5
156.	Barium	59-67	-	172-349	-	-	-	59-349
157.	Beryllium	<0.1	0.0012-0.25	-	-	-	-	0.0012-0.25
158.	Cadmium	0.4-0.7	-	<0.25	-	-	-	<0.25-0.7
159.	Chromium (total)	810-960	28-260	1,057-3,435	270-560	0.04-0.11	2.5-10.94	0.04-3,435
160.	Copper	47-56	0.05-21.3	-	-	-	-	0.05-56
161.	Lead	330-410	2.3-1,250	1.6-450	4.9-33	0.05-13.8	6.5-73	0.05-1,250
162.	Mercury	0.11-0.16	0.07-0.89	1-2	-	-	-	0.07-0.89
163.	Nickel	13-16	0.025-15	-	-	-	-	0.025-16
164.	Selenium	7.5-11	0.1-4.2	4-6	-	-	-	0.1-11
165.	Silver	<0.9	0.0013-2.8	<0.3	4-6	-	-	0.0013-6
167.	Vanadium	370-460	0.05-0.15	-	<0.3	-	-	0.05-460
168.	Zinc	380-450	10-1825	-	-	-	-	10-1,825

(a) U.S. EPA, Amoco Onsite Engineering Report, February 29, 1988 (Reference 6).
(b) Jacobs Engineering Company, Assessment of Hazardous Waste Practices, 1976 (Reference 3).
(c) Delisting petition #386 (Reference 17).
(d) Delisting petition #469 (Reference 20).
(e) Delisting petition #421 (Reference 19).
(f) Delisting petition #396 (Reference 18).
\- Data are not available for this constituent.

Table 2-4 (Continued)

AVAILABLE CHARACTERIZATION DATA FOR K048

Source of Data:	Untreated waste concentration, (ppm) (a)	(b)	(c)	(d)	(e)	(f)	Range
BDAT INORGANICS							
169. Cyanide	<0.1-1.0	0.01-1.1	-	-	-	-	0.01-1.1
171. Sulfide	130-2800	-	-	-	-	-	130-2800
OTHER PARAMETERS							
Filterable solids (%)	6[g]						
Oil and grease content (%)	12[g]						
Water content (%)	81[g]						

(a) U.S. EPA, Amoco Onsite Engineering Report, February 29, 1988 (Reference 6).
(b) Jacobs Engineering Company, Assessment of Hazardous Waste Practices, 1976 (Reference 3).
(c) Delisting petition #386 (Reference 17).
(d) Delisting petition #469 (Reference 20).
(e) Delisting petition #421 (Reference 19).
(f) Delisting petition #396 (Reference 18).
(g) Calculations in Appendix B.
\- Data are not available for this constituent.

Table 2-5

AVAILABLE CHARACTERIZATION DATA FOR K049

		Untreated waste concentration, (ppm)					
	Source of Data:	(a)	(b)	(c)	(d)	(e)	Range
BDAT ORGANICS							
	Volatiles						
4.	Benzene	-	95	ND-1600	-	-	ND-1,600
8.	Carbon disulfide	-	ND	0.15-0.96	-	-	ND-0.96
226.	Ethyl benzene	-	120	-	-	-	120
43.	Toluene	-	210	240-18,000	-	-	210-18,000
215-217.	Xylene (total)	-	150	-	-	-	150
	Semivolatiles						
57.	Anthracene	-	<40	ND-58	-	-	ND-58
62.	Benzo(a)pyrene	0.002-0.18	<40	-	-	-	0.002-<40
70.	Bis(2-ethylhexyl)phthalate	-	<40	ND-29	-	-	ND-<40
80.	Chrysene	-	40	ND-44	-	-	ND-44
96.	2,4-dimethylphenol	-	<40	ND-3.3	-	-	ND-<40
121.	Naphthalene	-	<40	160-680	-	-	<40-680
141.	Phenanthrene	-	87	ND-390	-	-	ND-390
142.	Phenol	5.7-127	<40	ND-8.9	-	-	ND-127
145.	Pyrene	-	<40	33-110	-	-	33-110
BDAT METALS							
154.	Antimony	-	<3.2	ND-19	-	-	ND-19
155.	Arsenic	7.4	3.9	3-30	-	<2.2-9.6	<2.2-30
156.	Barium	-	115	87-370	-	28-54.2	28-370
157.	Beryllium	0.0025	<0.1	ND-0.29	-	0.35	ND-0.35
158.	Cadmium	0.19	<0.4	0.7-4.4	-	28.8	0.19-28.8
159.	Chromium (total)	525	134	150-1400	476	28.9-512.5	28.9-1,400
221.	Chromium (hexavalent)	-	<0.05	-	-	0.02-<1.9	0.02-<1.9

(a) Jacobs Engineering Company, Assessment of Hazardous Waste Practices, 1976 (Reference 3).
(b) U.S. EPA, Conoco Characterization Report, February 22, 1988 (Reference 13).
(c) Delisting petition #503 (Reference 14).
(d) API, Refinery Solid Waste Survey, 1983 (Reference 2).
(e) Delisting petitions #481,#386,#530,#264,#426, and #469 (References 21, 17, 23, 24, 25, and 20).
ND The compound was not detected above the detection limit; the detection limit was not reported.
\- Data are not available for this constituent.

Table 2-5 (Continued)

AVAILABLE CHARACTERIZATION DATA FOR K049

Source of Data:	Untreated waste concentration, (ppm) (a)	(b)	(c)	(d)	(e)	Range
BDAT METALS (Continued)						
160. Copper	48	65.3	-	-	79.8	48-79.8
161. Lead	28.1	31.9	28-3900	302	21.95-2146	21.95-3,900
162. Mercury	0.59	0.6	ND-32	-	0.15	ND-32
163. Nickel	50	9.2	20-86	-	50.62	9.2-86
164. Selenium	1.0	<5.0	ND-4.6	-	<0.44-4.8	ND-5.0
165. Silver	0.4	<0.6	-	-	<0.38-<4.0	<0.38-<4.0
167. Vanadium	25	2.5	13-60	-	5.56	2.5-60
168. Zinc	250	142	-	-	72.8	72.8-250
BDAT INORGANICS						
169. Cyanide	0.000012-52.5	<0.5	-	-	-	0.000012-52.5
170. Fluoride	-	1.31	-	-	-	1.31
171. Sulfide	-	34.4	-	-	-	34.4
OTHER PARAMETERS						
BTU content (Btu/lb)	150[f]					
Filterable solids (%)	12[g]					
Oil and grease content (%)	37[g]					
Water content (%)	50[g]					
pH (standard units)	7.4[f]					
TOX (%)	Negligible[f]					

(a) Jacobs Engineering Company, Assessment of Hazardous Waste Practices, 1976 (Reference 3).
(b) U.S. EPA, Conoco Characterization Report, February 22, 1988 (Reference 13).
(c) Delisting petition #503 (Reference 14).
(d) API, Refinery Solid Waste Survey, 1983 (Reference 2).
(e) Delisting petitions #481,#386,#530,#264,#426, and #469 (References 21, 17, 23, 24, 25, and 20).
(f) Environ Corporation, Characterization of Listed Waste Streams (Reference 15).
(g) Calculations in Appendix B.

ND The compound was not detected above the detection limit.
- Data are not available for this constituent.

Table 2-6

AVAILABLE CHARACTERIZATION DATA FOR K050

Source of Data:	Untreated waste concentration, (ppm) (a)	(b)	(c)	(d)	Range
BDAT ORGANICS					
Semivolatiles					
62. Benzo(a)pyrene	--	0.7-3.6	--	--	0.7-3.6
142. Phenol	--	8-18.5	--	--	8-18.5
BDAT METALS					
155. Arsenic	--	10.2-11	--	--	10-2.11
157. Beryllium	--	0.05-0.34	--	--	0.05-0.34
158. Cadmium	--	1-1.5	--	--	1.0-1.5
159. Chromium (total)	11-1,600	310-311	206-492	42-226	11-1,600
221. Chromium (hexavalent)	--	--	0.01-0.016	<1.0	0.01-<1.0
160. Copper	--	67-75	--	--	67-75
161. Lead	25-1,100	0.5-155	13.7-166	--	0.5-1,100
162. Mercury	--	0.14-3.6	--	--	0.14-3.6
163. Nickel	--	61-170	--	--	61-170
164. Selenium	--	2.4-52	--	--	2.4-52
165. Silver	--	0.0007-0.01	--	--	0.0007-0.01
167. Vanadium	--	0.7-50	--	--	0.7-50
168. Zinc	--	91-297	--	--	91-297
	--		--		
BDAT INORGANICS					
169. Cyanide	--	0.0004-3.3	--	--	0.0004-3.3

(a) API, Refinery Solid Waste Survey, 1983 (Reference 2).
(b) Jacobs Engineering Company, Assessment of Hazardous Wastes Practices, 1976 (Reference 3).
(c) Delisting petition #481 (Reference 21).
(d) Delisting petition #386 (Reference 17).
- Data are not available for this constituent.

Table 2-6 (Continued)

AVAILABLE CHARACTERIZATION DATA FOR K050

OTHER PARAMETERS	
BTU content (BTU/lb)	1,500[a]
Filterable solids (%)	48[b]
Oil and grease content (%)	7[b]
Water content (%)	44[b]
pH (standard units)	7[a]
TOX (%)	Negligible[a]

[a] Environ Corporation, Characterization of Listed Waste Streams (Reference 15).
[b] Calculations in Appendix B.

Table 2-7

AVAILABLE CHARACTERIZATION DATA FOR K051

	Source of Data:	Untreated waste concentration, (ppm) (a)	(b)	(c)	(d)	(e)	(f)	Range
BDAT ORGANICS								
	Volatiles							
226.	Ethyl benzene	46-52	---	---	---	---	---	46-52
43.	Toluene	33-71	---	---	---	---	---	33-71
215-217.	Xylene (total)	71-83	---	---	---	---	---	71-83
	Semivolatiles							
52.	Acenaphthene	33	---	---	---	---	---	33
59.	Benz(a)anthracene	22-29	---	---	---	---	---	22-29
62.	Benzo(a)pyrene	0.002-45	0.002-4.5	---	---	---	---	0.002-45
70.	Bis(2-ethylhexyl)phthalate	26-30	---	---	---	---	---	26-30
80.	Chrysene	45-51	---	---	---	---	---	45-51
98.	Di-n-butylphthalate	43-230	---	---	---	---	---	43-230
109.	Fluorene	33-37	---	---	---	---	---	33-37
121.	Naphthalene	150-170	---	---	---	---	---	150-170
141.	Phenanthrene	110-120	---	---	---	---	---	110-120
142.	Phenol	<20	3.8-156.7	---	---	---	---	3.8-156.7
145.	Pyrene	62-74	---	---	---	---	---	62-74
BDAT METALS								
154.	Antimony	9-18	---	---	---	---	---	9-18
155.	Arsenic	5.4-9.7	0.1-32	---	---	<3.0	---	0.1-32
156.	Barium	72-120	---	---	---	188-412	---	72-412
157.	Beryllium	<0.1	0.0012-0.24	---	---	---	---	0.0012-0.24
158.	Cadmium	1.3-1.7	0.024-3.0	---	---	<0.25	---	0.024-3.0
159.	Chromium (total)	730-1100	0.1-6790	800-3220	150-875	535-3679	160-740	0.1-6790
221.	Chromium (hexavalent)	22@	---	<1.0	0.010-0.036	---	---	0.01-22@
160.	Copper	130-170	2.5-550	---	---	---	---	2.5-550
161.	Lead	640-940	0.25-1290	2120-2480	9.5-23.3	53-173	7.7-440	0.25-2480
162.	Mercury	0.07-0.31	0.04-6.2	---	---	3.0	---	0.04-6.2
163.	Nickel	30-37	0.25-150.4	---	---	---	---	0.25-150.4
164.	Selenium	0.5-1.6	0.005-7.6	---	---	2-12	---	0.005-12
165.	Silver	1.4	0.05-3	---	---	<0.3	---	0.05-3
167.	Vanadium	260-350	1-48.5	---	---	---	---	1-350
168.	Zinc	570-820	25-6596	---	---	---	---	25-6596

(a) U.S. EPA,Amoco Onsite Engineering Report, February 29, 1988 (Reference 6).
(b) Jacobs Engineering Company, Assessment of Hazardous Waste Practices, 1976 (Reference 3).
(c) Delisting petition #481 (Reference 21).
(d) Delisting petition #386 (Reference 17).
(e) Delisting petition #205 (Reference 16).
(f) Delisting petition #469 (Reference 20).
-- Data are not available for this constituent.
@ Colorimetric interference may have occurred in analysis of this sample.

Table 2-7 (Continued)

AVAILABLE CHARACTERIZATION DATA FOR K051

	Untreated waste concentration, (ppm)						
Source of Data:	(a)	(b)	(c)	(d)	(e)	(f)	Range
BDAT ORGANICS							
169. Cyanide	0.5-1.4	0.00006-51.4	---	---	---	---	0.00006-51.4
171. Sulfide	2,900-4,800	---	---	---	---	---	2,900-4,800
OTHER PARAMETERS							
Filterable solids (%)	22[g]						
Oil and grease content (%)	17[g]						
Water content (%)	60[g]						

(a) U.S. EPA,Amoco Onsite Engineering Report, February 29, 1988 (Reference 6).
(b) Jacobs Engineering Company, Assessment of Hazardous Waste Practices, 1976 (Reference 3).
(c) Delisting petition #481 (Reference 21).
(d) Delisting petition #386 (Reference 17).
(e) Delisting petition #205 (Reference 16).
(f) Delisting petition #469 (Reference 20).
(g) Calculations in Appendix B.

-- Data are not available for this constituent.

Table 2-8

AVAILABLE CHARACTERIZATION DATA FOR K052

		Untreated waste concentration, (ppm)				
	Source of Data:	(a)	(b)	(c)	(d)	Range
BDAT ORGANICS						
	Volatiles					
4.	Benzene	650	-	-	-	650
226.	Ethyl benzene	2,300	-	-	-	2,300
13.	Toluene	6,400	-	-	-	6,400
215-217.	Xylene (total)	3,500	-	-	-	3,500
	Semivolatiles					
62.	Benz(o)pyrene	<1.8	-	0.02-0.4	-	0.02-<1.8
81.	ortho-Cresol	13	-	-	-	13
82.	para-Cresol	13	-	-	-	13
96.	2,4-Dimethylphenol	4.2	-	-	-	4.2
121.	Naphthalene	13	-	-	-	13
141.	Phenanthrene	1.4	-	-	-	1.4
142.	Phenol	<1.8	-	2.1-250	-	<1.8-250
BDAT METALS						
154.	Antimony	111	-	-	-	111
155.	Arsenic	242	-	63-525	-	63-525
156.	Barium	8	-	-	-	8
157.	Beryllium	<0.1	-	0.0025	-	0.0025-<0.1
158.	Cadmium	0.82	-	4.5-8.1	-	0.82-8.1
159.	Chromium (total)	48.8	1.0-504	9.0-13.7	-	1.0-504
160.	Copper	146	-	110-172	-	110-172
161.	Lead	99.4	11.0-5,800	158-1,421	42-2,060	11-5800
162.	Mercury	2.4	-	0.19-0.94	-	0.19-2.4
163.	Nickel	97.2	-	235-392	-	97.2-392
164.	Selenium	<100	-	3.1-10.8	-	3.1-<100
165.	Silver	<6.0	-	0.05-1.7	-	0.05-<6.0
167.	Vanadium	<6.0	-	1.0-9.8	-	1.0-9.8
168.	Zinc	17.1	-	1,183-17,000	-	17.1-17,000

(a) U.S. EPA, Conoco Characterization Report, February 22, 1988 (Reference 13).
(b) API, Refinery Solid Waste Survey, 1983 (Reference 2).
(c) Jacobs Engineering Company, Assessment of Hazardous Waste Practices, 1976 (Reference 3).
(d) Delisting petition #386 (Reference 17).
-- Data are not available for this constituent.

Table 2-8 (Continued)

AVAILABLE CHARACTERIZATION DATA FOR K052

Source of Data:	Untreated waste concentration, (ppm) (a)	(b)	(c)	(d)	Range
BDAT INORGANICS					
169. Cyanide	1.89	-	-	-	1.89
170. Fluoride	955	-	-	-	955
171. Sulfide	111	-	-	-	111
OTHER PARAMETERS					
Filterable solids (%)	69[e]				
Oil and grease content (%)	12[e]				
Water content (%)	18[e]				

(a) U.S. EPA, Conoco Characterization Report, February 22, 1988 (Reference 13).
(b) API, Refinery Solid Waste Survey, 1983 (Reference 2).
(c) Jacobs Engineering Company, Assessment of Hazardous Waste Practices, 1976 (Reference 3).
(d) Delisting petition #386 (Reference 17).
(e) Calculations in Appendix B.
-- Data are not available for this constituent.

3.0 APPLICABLE/DEMONSTRATED TREATMENT TECHNOLOGIES

In the previous section of this document, petroleum refining wastes (K048-K052) were characterized and a separate waste treatability group was established for these wastes. In this section, treatment technologies applicable for treatment of wastes in this waste group are identified. Detailed descriptions of the technologies that are demonstrated on these wastes or on wastes judged to be similar are presented in this section along with available performance data.

3.1 Applicable Treatment Technologies

The Agency has identified the following treatment technologies as being applicable for nonwastewater forms of K048-K052 wastes and nonwastewater generated from treatment of K048-K052: incineration (fluidized bed and rotary kiln), solvent extraction, pressure filtration, thermal drying, and stabilization. Since K048-K052 wastes contain both organic and inorganic hazardous constituents, applicable technologies include those which destroy or reduce the total amount of various organic compounds in the waste (i.e., incineration, solvent extraction, pressure filtration, and thermal drying) and those which reduce the leachability of BDAT metals in the waste (i.e., stabilization).

The Agency has identified the following treatment technologies as being applicable for wastewater forms of K048-K052 and wastewater generated

from the treatment of K048-K052: biological treatment, carbon adsorption, and chromium reduction followed by chemical precipitation, and sedimentation or filtration. Since these wastewaters may contain both organic and inorganic hazardous constituents, applicable technologies include those which destroy or reduce the total amount of various organic compounds in the treated residual (i.e., biological treatment and carbon adsorption) and those which reduce the concentration of BDAT metals in the treated residual (i.e., chromium reduction and chemical precipitation.)

The selection of treatment technologies applicable for treating BDAT List constituents is based on current literature sources, field testing, and data submitted by equipment manufacturers and industrial concerns.

3.2 Demonstrated Treatment Technologies

The demonstrated technologies that the Agency has identified for treatment of organics in nonwastewater forms of K048-K052 are incineration (fluidized bed and rotary kiln), solvent extraction, pressure filtration, and thermal drying. The Agency has identified stabilization as a demonstrated technology for the immobilization of metals in nonwastewater (incinerator ash) generated from treatment of K048-K052.

For metals in wastewater residuals, EPA has identified the following demonstrated treatment train: chromium reduction followed by lime and sulfide

precipitation, and vacuum filtration. This treatment train is commonly used for metal containing wastewaters.

The Agency is not aware of any facilities that treat wastewater forms of K048-K052. Therefore, EPA has not identified any demonstrated technologies for treatment of wastewater forms of K048-K052.

Detailed descriptions of these technologies are included in the following subsections. Treatment performance data for each technology are included in the following subsections or in Appendix F as referenced in the text. A key summarizing the plant codes is included in Appendix C.

A. Incineration. Incineration provides for destruction of the organics in the waste. As described in Section 1.0, the best measure of performance for a destruction technology is the extent to which a constituent is destroyed or the total amount of constituent remaining after treatment. Incineration generally results in the formation of two treatment residuals: ash and scrubber water. Incineration is demonstrated for treatment of refinery wastes from the K048-K052 treatability group. The Agency tested a fluidized bed incineration process at plant A for treatment of K048 and K051 wastes. A more detailed discussion of incineration is presented in Section 3.4.

Prior to incineration at plant A, DAF float (K048) waste was mixed with waste biological sludge, and the mixture was dewatered using two belt

filter presses. To improve dewatering capabilities, a polymer solution was added to the undewatered DAF float mixture. The dewatering step increased the total solids content of the waste from 30-46 percent to 79-91 percent. Dewatered DAF float mixture and API separator sludge (K051) were separately injected into the fluidized bed for combustion. Combustion gases with elutriated flyash entered a cyclone for particulate removal and were then treated in a scrubber system prior to discharge to the atmosphere. Fluidized bed incinerator ash was collected from the ash conveyer from the cyclone.

Tables 3-1 through 3-6 at the end of this section present, by sample set, the BDAT List constituents detected in the untreated (dewatered DAF float mixture and API separator sludge) and treated (fluidized bed incinerator ash) wastes and the operating data from the fluidized bed incinerator treatment system. Testing procedures used to analyze these constituents are specifically identified in the analytical quality assurance/quality control (QA/QC) discussion of this background document (Appendix D).

No data on the treatment of organic constituents in K048-K052 wastewater were available to the Agency. However, the Agency determined that combustion gas scrubber discharge water from the rotary kiln incineration of K019 waste represents treatment of organics in wastewaters judged to be similar to K048-K052 wastewater. In addition, the Agency determined that treatment performance data from the treatment of K062 and metal-bearing characteristic wastes represent treatment of metals in wastewaters judged to be similar to K048-K052 wastewaters. These data are included in Section 4.0.

Between proposal and promulgation the Agency plans to evaluate treatment performance data for K048-K052 wastewaters (scrubber water) from the fluidized bed incineration of K048 at plant A.

B. Solvent Extraction. Solvent extraction provides for the separation of organics from the waste. This technology results in the formation of two treatment residuals: the treated waste and the extract. Treatment performance data for a solvent extraction process at plant F were submitted by industry to support solvent extraction as a demonstrated technology for treatment of K049 and K051. Treatment performance data for a solvent extraction process at plant G were submitted to support solvent extraction as a demonstrated technology for treatment of K048-K052. In addition, treatment performance data for a solvent extraction process at plant K were submitted to support solvent extraction as a demonstrated technology for treatment of petroleum refinery wastes (the specific waste codes treated were not reported). A more detailed discussion of solvent extraction is presented in Section 3.4.

As discussed in Section 1.0, the Agency is developing treatment standards for organic constituents based on the total concentration in the waste. However, treatment performance data submitted from plants F and G did not include total waste concentration data for the untreated wastes or for the treated residuals. The submitted TCLP data were not used for the development of treatment standards. The submitted TCLP data can be found in Sections F.5 and F.6 of Appendix F for plants F and G, respectively.

Two sets of treatment performance data (referred to as Report 1 and Report 2) were submitted from plant K. However, data presented in Report 1 did not include total waste concentration data for the untreated wastes or for the treated residuals. The submitted TCLP data were not used for the development of treatment standards. The TCLP data submitted in Report 1 can be found in Section F.8 of Appendix F. Table 3-7 presents the BDAT constituents detected in the untreated and treated wastes and the operating data for the solvent extraction treatment system at plant K (Report 2).

Additionally, treatment performance data for a solvent extraction process at plant L has been submitted to support solvent extraction as a demonstrated technology for treatment of K051. These data became available to the Agency too late to be used in the development of treatment standards for the proposed rule. These data will be considered in the development of treatment standards for the final rule. Data submitted from plant L can be found in Section F.9 of Appendix F.

C. Pressure Filtration. Pressure filtration provides for the separation of liquid and solid phases of a waste. Pressure filtration results in the formation of two treatment residuals: the filter cake and the filtrate. Treatment performance data for a belt filter press process at plant B were submitted by industry to support pressure filtration as a demonstrated technology for treatment of K051. Treatment performance data for a belt filter press process at plant C were submitted by industry to support pressure filtration as a demonstrated technology for treatment of petroleum refinery

wastes (the specific waste codes treated were not reported). Treatment performance data for a plate filter press process at plant D were submitted by industry to support pressure filtration as a demonstrated technology for treatment of a mixture of K048, K049 and K051. In addition, treatment performance data for a plate filter press process at plant E were submitted by industry to support pressure filtration as a demonstrated technology for treatment of a mixture of K051 and K052. A more detailed discussion of pressure filtration including belt and plate filtration is presented in Section 3.4.

As discussed in Section 1.0, the Agency is developing treatment standards for organic constituents based on the total concentration in the waste. However, treatment performance data submitted from plants B, C, D, and E did not include total waste concentration data for the untreated wastes or for the treated residuals. The submitted TCLP data were not used for the development of treatment standards. The submitted TCLP data can be found in Sections F.1, F.2, F.3, and F.4 of Appendix F for plants B, C, D, and E, respectively.

D. Thermal Drying. Thermal drying provides for the separation of organics from the waste. Thermal drying generally results in the formation of two treatment residuals: the treated waste and the condensate or scrubber water. Treatment performance data for a thermal drying treatment system at plant H were submitted to support thermal drying as a demonstrated technology for treatment of petroleum refinery wastes (the specific waste codes treated

were not reported) and of a mixture of K051 and K052. The unspecified petroleum refinery wastes that were treated by thermal drying had been previously treated by belt filter press filtration at plant C, and the mixed K051 and K052 had been previously treated by plate filter press filtration at plant E.

As discussed in Section 1.0, the Agency is developing treatment standards for organic constituents based on the total concentration in the waste. However, treatment performance data submitted from plant H did not include total waste concentration data for the filter cakes or for the treated residuals. The submitted TCLP data were not used for the development of treatment standards. The submitted TCLP data from plant H can be found in Section F.7 of Appendix F.

E. Stabilization. Stabilization reduces the leachability of metals in the wastes. This technology results in the formation of a single chemically or structurally stabilized treatment residual. As discussed in Section 1.0, the Agency is developing treatment standards for metal constituents treated by stabilization based on the constituent concentration in the TCLP extract.

The Agency tested incinerator ash from treatment of K048 and K051 wastes at plant A using a stabilization process at plant I. In addition, treatment performance data from three stabilization processes at plant J were submitted by industry to support stabilization as a demonstrated technology for treatment of K048-K052 wastes. A more detailed discussion of stabilization is presented in Section 3.4.

Incinerator ash from plant A was stabilized at plant I. The stabilization process involves the addition of water and binder material to the incinerator ash followed by mixing and a cure period. The process was run three times using three different binders for a total of nine tests. The three types of binder materials used were: portland cement, kiln dust, and a lime and fly ash mixture. At the end of the 28 days cure period for each test, TCLP was performed on stabilized ash samples. Table 3-8 presents the analytical results for BDAT metals detected in the TCLP extracts of untreated (incinerator ash) and treated (stabilized ash) wastes and the design and operating data from the ash stabilization treatment system. Testing procedures used to analyze these constituents are specifically identified in the analytical quality assurance/quality control (QA/QC) discussion of this background document (Appendix D).

Slop oil emulsion solids (K049) and API separator sludge (K051) were stabilized individually without prior treatment at plant J using a two-step process. The first step involved the addition of a proprietary chemical to microencapsulate the organic matter. The second step involved the addition of pozzolanic material (e.g., fly ash, cement, and kiln dust) to solidify the entire waste. Table 3-9 presents the BDAT constituents detected in the treated and untreated K049 waste from the stabilization treatment system. Table 3-10 presents the BDAT constituents detected in the treated and untreated K051 wastes from the stabilization treatment system. Design and operating data were not submitted for these stabilization processes.

Filter cakes from treatment of petroleum refinery wastes (the specific waste codes treated were not reported) at plant C and from treatment of a mixture of K051 and K052 wastes at plant E were stabilized separately at plant J using the same two-step process as described above. Tables 3-11 and 3-12 present the BDAT constituents detected in the untreated (filter cakes) and treated (stabilized filter cakes) wastes from plants C and E, respectively.

Filter cakes from plants C and E from treatment of petroleum refinery wastes (the specific waste codes were not reported) and a mixture of K051 and K052, respectively, were stabilized separately at plant J using a soluble sodium silicate/pozzolanic process. Tables 3-13 and 3-14 present the BDAT constituents detected in the untreated (filter cake) and treated (stabilized filter cake) wastes from plants C and E, respectively.

Filter cakes from plants C and E from treatment of petroleum refinery wastes (the specific waste codes were not reported) and a mixture of K051 and K052, respectively, were stabilized separately at plant J using a mixture of cement, fly ash, and lime. Tables 3-15 and 3-16 present the BDAT constituents detected in the untreated (filter cake) and treated (stabilized filter cake) wastes from plants C and E, respectively.

Two thermally dried filter cakes from plant H were stabilized separately at plant J using a soluble sodium silicate/pozzolanic process. The filter cakes treated at plant H were generated from plants C and E from

treatment of petroleum refinery wastes (the specific waste codes were not reported) and a mixture of K051 and K052 wastes, respectively. Tables 3-17 and 3-18 present the BDAT constituents detected in the untreated (filter cakes) and treated (stabilized filter cakes) wastes originally from plants C and E, respectively.

F. Chromium reduction followed by lime and sulfide precipitation and vacuum filtration. Chromium reduction reduces the concentration of hexavalent chromium in the wastes by converting hexavalent chromium to the trivalent state. Lime and sulfide precipitation and vacuum filtration removes metals from the wastewater forming a precipitate sludge. Vacuum filtration separates the precipitated sludge from the wastewater. No data on the treatment of hexavalent chromium or other metals in K048-K052 wastewaters were available to the Agency. However, the Agency determined that treatment performance data for chromium reduction followed by lime and sulfide precipitation and vacuum filtration presented in the Envirite Onsite Engineering Report (Reference 27) represent treatment of hexavalent chromium and metals in wastewaters judged to be similar to wastewater forms of K048-K052 wastes. These data are included in Section 4.0. More detailed discussions of the chromium reduction, chemical precipitation, and filtration technologies are presented in Section 3.4.

3.3 Available Treatment Technologies

As defined in Section 1.0, an available treatment technology is one that (1) is not a proprietary or patented process that cannot be purchased or licensed from the proprietor (in other words, is commercially available), and (2) substantially diminishes the toxicity of the waste or substantially reduces the likelihood of migration of hazardous constituents from the waste. The demonstrated technologies for treatment of nonwastewater forms of K048-K052, incineration technologies including fluidized bed and rotary kiln, solvent extraction, pressure filtration, thermal drying, and stabilization, are considered to be commercially available technologies. The demonstrated technology for treatment of wastewater forms of K048-K052, chromium reduction followed by lime and sulfide precipitation and vacuum filtration, is also considered to be commercially available.

3.4 Detailed Description of Treatment Technologies

The demonstrated treatment technologies discussed in Section 3.2 are described in more detail in Sections 3.4.1-3.4.6, as shown below.

Technology Description	Subsection
Incineration	3.4.1
Solvent Extraction	3.4.2
Sludge Filtration	3.4.3
Stabilization	3.4.4
Chromium Reduction	3.4.5
Chemical Precipitation	3.4.6

3.4.1 Incineration

This section addresses the commonly used incineration technologies: Liquid injection, rotary kiln, fluidized bed incineration, and fixed hearth. A discussion is provided regarding the applicability of these technologies, the underlying principles of operation, a technology description, waste characteristics that affect performance, and finally important design and operating parameters. As appropriate, the subsections are divided by type of incineration unit.

Applicability and Use of Incineration

Liquid Injection

Liquid injection is applicable to wastes that have viscosity values sufficiently low so that the waste can be atomized in the combustion chamber. A range of literature maximum viscosity values are reported with the low being 100 SSU and the high being 10,000 SSU. It is important to note that viscosity is temperature dependent so that while liquid injection may not be applicable to a waste at ambient conditions, it may be applicable when the waste is heated. Other factors that affect the use of liquid injection are particle size and the presence of suspended solids. Both of these waste parameters can cause plugging of the burner nozzle.

Rotary Kiln/Fluidized Bed/Fixed Hearth

These incineration technologies are applicable to a wide range of hazardous wastes. They can be used on wastes that contain high or low total organic content, high or low filterable solids, various viscosity ranges, and a range of other waste parameters. EPA has not found these technologies to be demonstrated on wastes that are comprised essentially of metals with low organic concentrations. In addition, the Agency expects that some of the high metal content wastes may not be compatible with existing and future air emission limits without emission controls far more extensive than currently practiced.

Underlying Principles of Operation

Liquid Injection

The basic operating principle of this incineration technology is that incoming liquid wastes are volatilized and then additional heat is supplied to the waste to destabilize the chemical bonds. Once the chemical bonds are broken, these constituents react with oxygen to form carbon dioxide and water vapor. The energy needed to destabilize the bonds is referred to as the energy of activation.

Rotary Kiln and Fixed Hearth

There are two distinct principles of operation for these incineration technologies, one for each of the chambers involved. In the primary chamber, energy, in the form of heat, is transferred to the waste to achieve volatilization of the various organic waste constituents. During this volatilization process some of the organic constituents will oxidize to CO_2 and water vapor. In the secondary chamber, additional heat is supplied to overcome the energy requirements needed to destabilize the chemical bonds and allow the constituents to react with excess oxygen to form carbon dioxide and water vapor. The principle of operation for the secondary chamber is similar to liquid injection.

Fluidized Bed

The principle of operation for this incineration technology is somewhat different than for rotary kiln and fixed hearth incineration, in that there is only one chamber which contains the fluidizing sand and a freeboard section above the sand. The purpose of the fluidized bed is to both volatilize the waste and combust the waste. Destruction of the waste organics can be accomplished to a better degree in this chamber than in the primary chamber of the rotary kiln and fixed hearth because of 1) improved heat transfer from fluidization of the waste using forced air and 2) the fact that the fluidization process provides sufficient oxygen and turbulence to convert the organics to carbon dioxide and water vapor. The freeboard generally does

not have an afterburner; however, additional time is provided for conversion of the organic constituents to carbon dioxide, water vapor, and hydrochloric acid if chlorine is present in the waste.

Description of Incineration Process

Liquid Injection

The liquid injection system is capable of incinerating a wide range of gases and liquids. The combustion system has a simple design with virtually no moving parts. A burner or nozzle atomizes the liquid waste and injects it into the combustion chamber where it burns in the presence of air or oxygen. A forced draft system supplies the combustion chamber with air to provide oxygen for combustion and turbulence for mixing. The combustion chamber is usually a cylinder lined with refractory (i.e., heat resistant) brick and can be fired horizontally, vertically upward, or vertically downward. Figure 3-1 illustrates a liquid injection incineration system.

Rotary Kiln

A rotary kiln is a slowly rotating, refractory-lined cylinder that is mounted at a slight incline from the horizontal (see Figure 3-2). Solid wastes enter at the high end of the kiln, and liquid or gaseous wastes enter

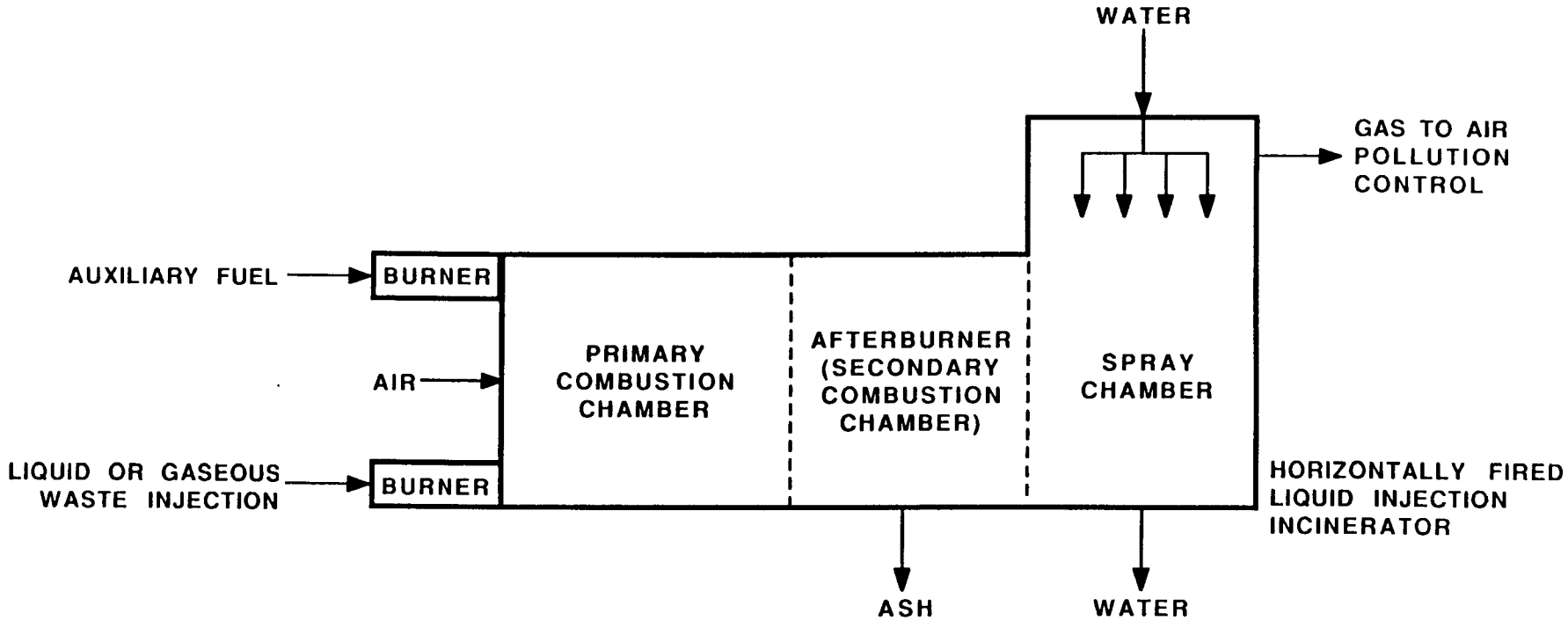

FIGURE 3-1

LIQUID INJECTION INCINERATOR

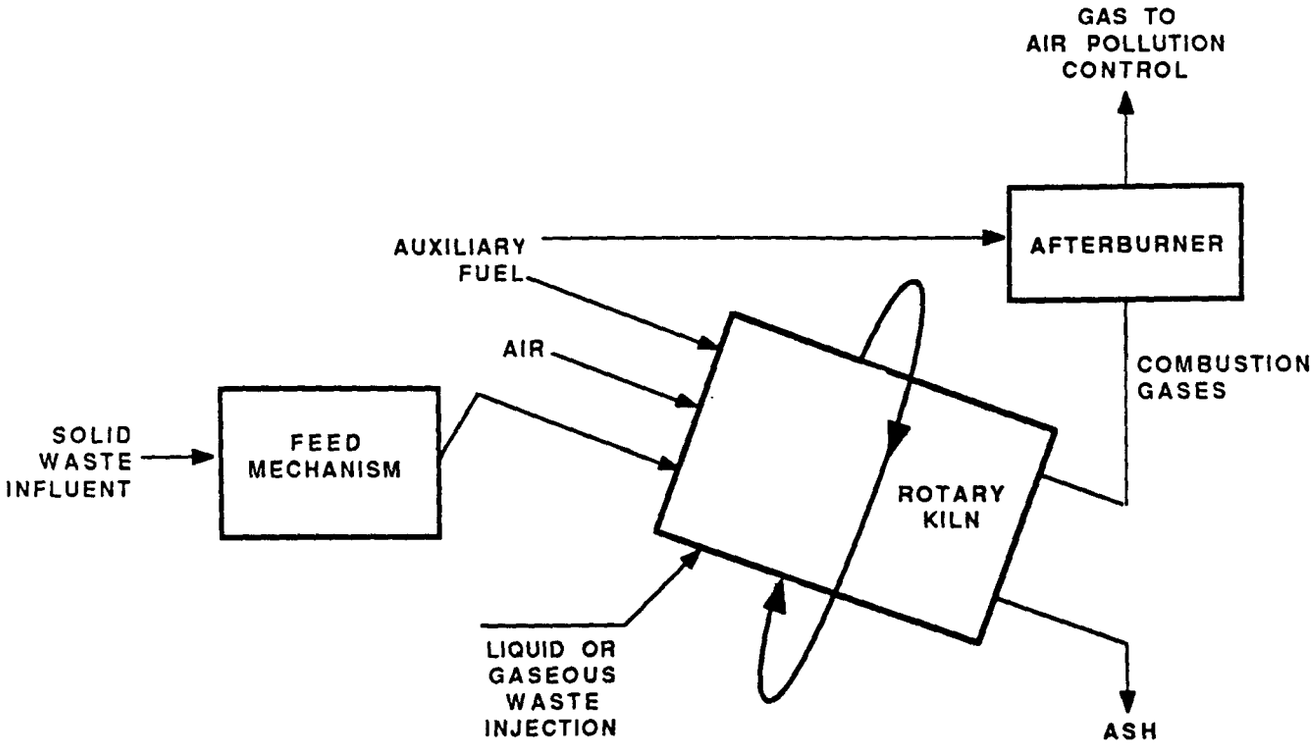

FIGURE 3-2

ROTARY KILN INCINERATOR

through atomizing nozzles in the kiln or afterburner section. Rotation of the kiln exposes the solids to the heat, vaporizes them, and allows them to combust by mixing with air. The rotation also causes the ash to move to the lower end of the kiln where it can be removed. Rotary kiln systems usually have a secondary combustion chamber or afterburner following the kiln for further combustion of the volatilized components of solid wastes.

Fluidized Bed

A fluidized bed incinerator consists of a column containing inert particles such as sand which is referred to as the bed. Air, driven by a blower, enters the bottom of the bed to fluidize the sand. Air passage through the bed promotes rapid and uniform mixing of the injected waste material within the fluidized bed. The fluidized bed has an extremely high heat capacity (approximately three times that of flue gas at the same temperature), thereby providing a large heat reservoir. The injected waste reaches ignition temperature quickly and transfers the heat of combustion back to the bed. Continued bed agitation by the fluidizing air allows larger particles to remain suspended in the combustion zone. (See Figure 3-3)

Fixed Hearth Incineration

Fixed hearth incinerators, also called controlled air or starved air incinerators, are another major technology used for hazardous waste incineration. Fixed hearth incineration is a two-stage combustion process

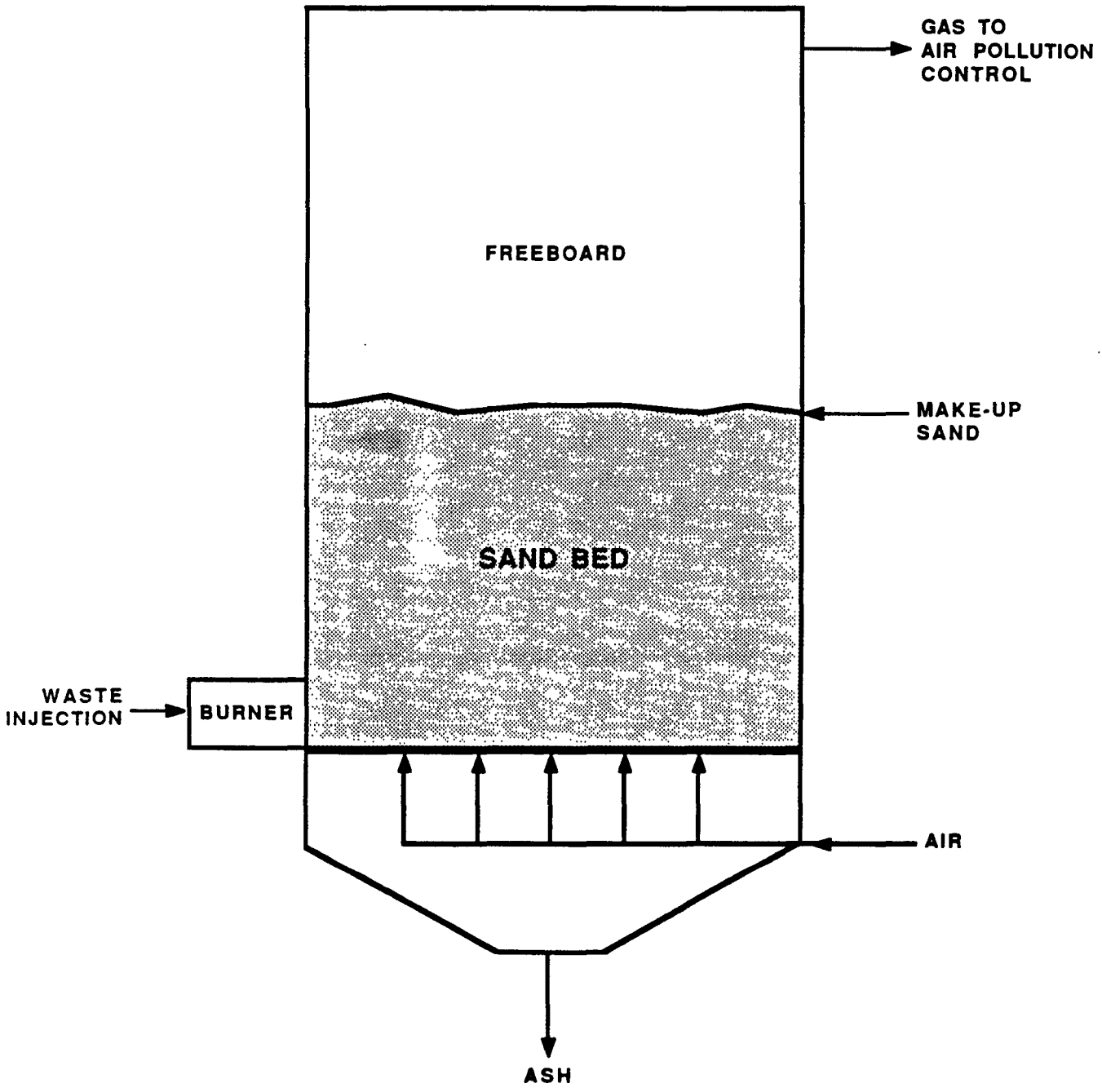

FIGURE 3-3

FLUIDIZED BED INCINERATOR

(see Figure 3-4). Waste is ram-fed into the first stage, or primary chamber, and burned at less than stoichiometric conditions. The resultant smoke and pyrolysis products, consisting primarily of volatile hydrocarbons and carbon monoxide, along with the normal products of combustion, pass to the secondary chamber. Here, additional air is injected to complete the combustion. This two-stage process generally yields low stack particulate and carbon monoxide (CO) emissions. The primary chamber combustion reactions and combustion gas are maintained at low levels by the starved air conditions so that particulate entrainment and carryover are minimized.

Air Pollution Controls

Following incineration of hazardous wastes, combustion gases are generally further treated in an air pollution control system. The presence of chlorine or other halogens in the waste requires a scrubbing or absorption step to remove HCl and other halo-acids from the combustion gases. Ash in the waste is not destroyed in the combustion process. Depending on its composition, ash will either exit as bottom ash, at the discharge end of a kiln or hearth for example, or as particulate matter (fly ash) suspended in the combustion gas stream. Particulate emissions from most hazardous waste combustion systems generally have particle diameters less than one micron and require high efficiency collection devices to minimize air emissions. In addition, scrubber systems provide additional buffer against accidental releases of incompletely destroyed waste products due to poor combustion efficiency or combustion upsets, such as flame outs.

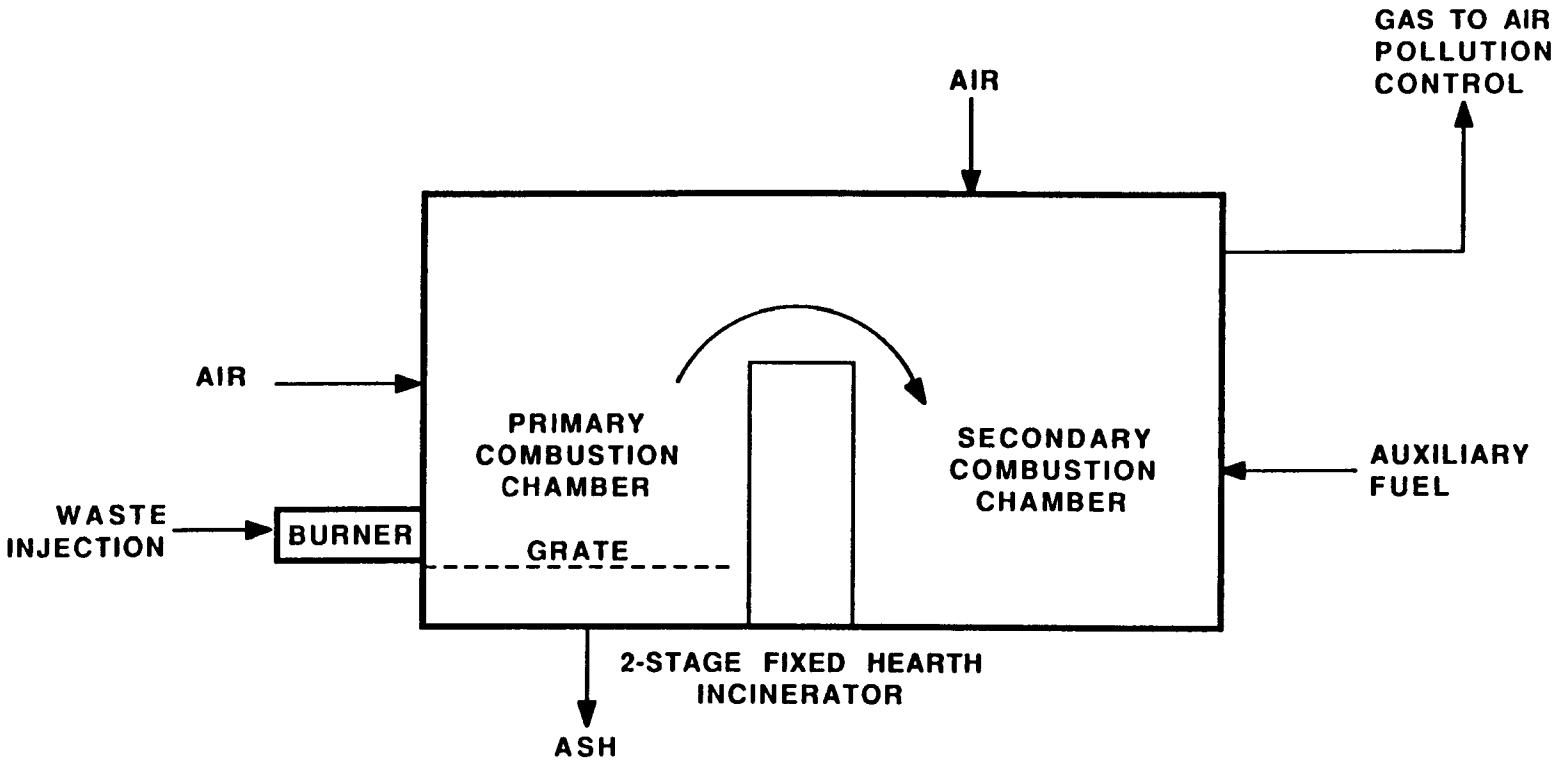

FIGURE 3-4

FIXED HEARTH INCINERATOR

Waste Characteristics Affecting Performance

Liquid Injection

In determining whether liquid injection is likely to achieve the same level of performance on an untested waste as a previously tested waste, the Agency will compare bond dissociation energies of the constituents in the untested and tested waste. This parameter is being used as a surrogate indicator of activation energy which, as discussed previously, is the amount of energy required to destabilize molecular bonds. Other energy effects (e.g., vibrational, the formation of intermediates, and interactions between different molecular bonds) may have a significant influence on activation energy.

Because of the shortcomings of bond energies in estimating activation energy, EPA analyzed other waste characteristic parameters to determine if these parameters would provide a better basis for transferring treatment standards from a tested waste to an untested waste. These parameters include heat of combustion, heat of formation, use of available kinetic data to predict activation energies, and general structural class. All of these were rejected for reasons provided below.

The heat of combustion only measures the difference in energy of the products and reactants; it does not provide information on the transition state (i.e., the energy input needed to initiate the reaction). Heat of

formation is used as a predictive tool for whether reactions are likely to proceed; however, there are a significant number of hazardous constituents for which these data are not available. Use of kinetic data were rejected because these data are limited and could not be used to calculate free energy values (ΔG) for the wide range of hazardous constituents to be addressed by this rule. Finally, EPA decided not to use structural classes because the Agency believes that evaluation of bond dissociation energies allows for a more direct determination of whether a constituent will be destabilized.

Rotary Kiln/Fluidized Bed/Fixed Hearth

Unlike liquid injection, these incineration technologies also generate a residual ash. Accordingly, in determining whether these technologies are likely to achieve the same level of performance on an untested waste as a previously tested waste, EPA would need to examine the waste characteristics that affect volatilization of organics from the waste, as well as destruction of the organics, once volatilized. Relative to volatilization, EPA will examine thermal conductivity of the entire waste and boiling point of the various constituents. As with liquid injection, EPA will examine bond energies in determining whether treatment standards for scrubber water residuals can be transferred from a tested waste to an untested waste. Below is a discussion of how EPA arrived at thermal conductivity and boiling point as the best method to assess volatilization of organics from the waste;

the discussion relative to bond energies is the same for these technologies as for liquid injection and will not be repeated here.

(1) Thermal Conductivity. Consistent with the underlying principles of incineration, a major factor with regard to whether a particular constituent will volatilize is the transfer of heat through the waste. In the case of rotary kiln, fluidized bed, and fixed hearth incineration, heat is transferred through the waste by three mechanisms: radiation, convection, and conduction. For a given incinerator, heat transferred through various wastes by radiation is more a function of the design and type of incinerator than the waste being treated. Accordingly, the type of waste treated will have a minimal impact on the amount of heat transferred by radiation. With regard to convection, EPA also believes that the type of heat transfer will generally be more a function of the type and design of incinerator than the waste itself. However, EPA is examining particle size as a waste characteristic that may significantly impact the amount of heat transferred to a waste by convection and thus impact volatilization of the various organic compounds. The final type of heat transfer, conduction, is the one that EPA believes will have the greatest impact on volatilization of organic constituents. To measure this characteristic, EPA will use thermal conductivity; an explanation of this parameter, as well as how it can be measured is provided below. Heat flow by conduction is proportional to the temperature gradient across the material. The proportionality constant is a property of the material and referred to as the thermal conductivity. (Note: The analytical method that EPA has identified for measurement of thermal conductivity is named "Guarded, Comparative,

Longitudinal Heat Flow Technique"; it is described in an Appendix to this technology section.) In theory, thermal conductivity would always provide a good indication of whether a constituent in an untested waste would be treated to the same extent in the primary incinerator chamber as the same constituent in a previously tested waste.

In practice, thermal conductivity has some limitations in assessing the transferability of treatment standards; however, EPA has not identified a parameter that can provide a better indication of heat transfer characteristics of a waste. Below is a discussion of both the limitations associated with thermal conductivity, as well as other parameters considered.

Thermal conductivity measurements, as part of a treatability comparison for two different wastes through a single incinerator, are most meaningful when applied to wastes that are homogeneous (i.e., major constituents are essentially the same). As wastes exhibit greater degrees of non-homogeneity (e.g., significant concentration of metals in soil), then thermal conductivity becomes less accurate in predicting treatability because the measurement essentially reflects heat flow through regions having the greatest conductivity (i.e., the path of least resistance) and not heat flow through all parts of the waste.

Btu value, specific heat, and ash content were also considered for predicting heat transfer characteristics. These parameters can no better account for non-homogeneity than thermal conductivity; additionally, they are

not directly related to heat transfer characteristics. Therefore, these parameters do not provide a better indication of heat transfer that will occur in any specific waste.

(2) Boiling Point. Once heat is (transferred to a constituent within a waste, then removal of this constituent from the waste will depend on its volatility. As a surrogate of volatility, EPA is using boiling point of the constituent. Compounds with lower boiling points have higher vapor pressures and, therefore, would be more likely to vaporize. The Agency recognizes that this parameter does not take into consideration the impact of other compounds in the waste on the boiling point of a constituent in a mixture; however, the Agency is not aware of a better measure of volatility that can easily be determined.

Incineration Design and Operating Parameters

Liquid Injection

For a liquid injection unit, EPA's analysis of whether the unit is well designed will focus on (1) the likelihood that sufficient energy is provided to the waste to overcome the activation level for breaking molecular bonds and (2) whether sufficient oxygen is present to convert the waste constituents to carbon dioxide and water vapor. The specific design parameters that the Agency will evaluate to assess whether these conditions are met are: temperature, excess oxygen, and residence time. Below is a discussion

of why EPA believes these parameters to be important, as well as a discussion of how these parameters will be monitored during operation.

It is important to point out that, relative to the development of land disposal restriction standards, EPA is only concerned with these design parameters when a quench water or scrubber water residual is generated from treatment of a particular waste. If treatment of a particular waste in a liquid injection unit would not generate a wastewater stream, then the Agency, for purposes of land disposal treatment standards, would only be concerned with the waste characteristics that affect selection of the unit, not the above-mentioned design parameters.

(1) Temperature. Temperature is important in that it provides an indirect measure of the energy available (i.e., Btus/hr) to overcome the activation energy of waste constituents. As the design temperature increases, the more likely it is that the molecular bonds will be destabilized and the reaction completed.

The temperature is normally controlled automatically through the use of instrumentation which senses the temperature and automatically adjusts the amount of fuel and/or waste being fed. The temperature signal transmitted to the controller can be simultaneously transmitted to a recording device, referred to as a strip chart, and thereby continuously recorded. To fully assess the operation of the unit, it is important to know not only the exact

location in the incinerator that the temperature is being monitored but also the location of the design temperature.

(2) Excess Oxygen. It is important that the incinerator contain oxygen in excess of the stoichiometric amount necessary to convert the organic compounds to carbon dioxide and water vapor. If insufficient oxygen is present, then destabilized waste constituents could recombine to the same or other BDAT list organic compounds and potentially cause the scrubber water to contain higher concentrations of BDAT list constituents than would be the case for a well operated unit.

In practice, the amount of oxygen fed to the incinerator is controlled by continuous sampling and analysis of the stack gas. If the amount of oxygen drops below the design value, then the analyzer transmits a signal to the valve controlling the air supply and thereby increases the flow of oxygen to the afterburner. The analyzer simultaneously transmits a signal to a recording device so that the amount of excess oxygen can be continuously recorded. Again, as with temperature, it is important to know the location from which the combustion gas is being sampled.

(3) Carbon Monoxide. Carbon monoxide is an important operating parameter because it provides an indication of the extent to which the waste organic constituents are being converted to CO_2 and water vapor. As the carbon monoxide level increases, it indicates that greater amounts of organic waste constituents are unreacted or partially reacted. Increased carbon

monoxide levels can result from insufficient excess oxygen, insufficient turbulence in the combustion zone, or insufficient residence time

(4) Waste Feed Rate. The waste feed rate is important to monitor because it is correlated to the residence time. The residence time is associated with a specific Btu energy value of the feed and a specific volume of combustion gas generated. Prior to incineration, the Btu value of the waste is determined through the use of a laboratory device known as a bomb colorimeter. The volume of combustion gas generated from the waste to be incinerated is determined from an analysis referred to as an ultimate analysis. This analysis determines the amount of elemental constituents present which include carbon, hydrogen, sulfur, oxygen, nitrogen, and halogens. Using this analysis plus the total amount of air added, the volume of combustion gas can be calculated. Having determined both the Btu content and the expected combustion gas volume, the feed rate can be fixed at the desired residence time. Continuous monitoring of the feed rate will determine whether the unit was operated at a rate corresponding to the designed residence time.

Rotary Kiln

For this incineration, EPA will examine both the primary and secondary chamber in evaluating the design of a particular incinerator. Relative to the primary chamber, EPA's assessment of design will focus on whether it is likely that sufficient energy will be provided to the waste in order to volatilize the waste constituents. For the secondary chamber, analogous to

the sole liquid injection incineration chamber, EPA will examine the same parameters discussed previously under "Liquid Injection." These parameters will not be discussed again here.

The particular design parameters to be evaluated for the primary chamber are: kiln temperature, residence time, and revolutions per minute. Below is a discussion of why EPA believes these parameters to be important, as well as a discussion of how these parameters will be monitored during operation.

(1) Temperature. The primary chamber temperature is important in that it provides an indirect measure of the energy input: (i.e., BTU/hr) that is available for heating the waste. The higher the temperature is designed to be in a given kiln, the more likely it is that the constituents will volatilize. As discussed earlier under "Liquid Injection", temperature should be continuously monitored and recorded. Additionally, it is important to know the location of the temperature sensing device in the kiln.

(2) Residence Time. This parameter is important in that it affects whether sufficient heat is transferred to a particular constituent in order for volatilization to occur. As the time that the waste is in the kiln is increased, a greater quantity of heat is transferred to the hazardous waste constituents. The residence time will be a function of the specific configuration of the rotary kiln including the length and diameter of the kiln, the waste feed rate, and the rate of rotation.

(3) Revolutions Per Minute (RPM). This parameter provides an indication of the turbulence that occurs in the primary chamber of a rotary kiln. As the turbulence increases, the quantity of heat transferred to the waste would also be expected to increase. However, as the RPM value increases, the residence time decreases resulting in a reduction of the quantity of heat transferred to the waste. This parameter needs to be carefully evaluated because it provides a balance between turbulence and residence time.

Fluidized Bed

As discussed previously, in the section on "Underlying Principles of Operation", the primary chamber accounts for almost all of the conversion of organic wastes to carbon dioxide, water vapor, and acid gas if halogens are present. The secondary chamber will generally provide additional residence time for thermal oxidation of the waste constituents. Relative to the primary chamber, the parameters that the Agency will examine in assessing the effectiveness of the design are temperature, residence time, and bed pressure differential. The first two were discussed under rotary kiln and will not be discussed here. The latter, bed pressure differential, is important in that it provides an indication of the amount of turbulence and, therefore, indirectly the amount of heat supplied to the waste. In general, as the pressure drop increases, both the turbulence and heat supplied increase. The pressure drop through the bed should be continuously monitored and recorded to ensure that the design value is achieved.

Fixed Hearth

The design considerations for this incineration unit are similar to a rotary kiln with the exception that rate of rotation (i.e., RPM) is not an applicable design parameter. For the primary chamber of this unit, the parameters that the Agency will examine in assessing how well the unit is designed are the same as discussed under rotary kiln; for the secondary chamber (i.e., afterburner), the design and operating parameters of concern are the same as previously discussed under "Liquid Injection."

Incineration References

Ackerman DG, McGaughey JF, Wagoner, DE, "At Sea Incineration of PCB-Containing Wastes on Board the M/T Vulcanus," USEPA, 600/7-83-024, April 1983.

Bonner TA, et al., Engineering Handbook for Hazardous Waste Incineration. SW-889 Prepared by Monsanto Research Corporation for U.S. EPA, NTIS PB 81-248163. June 1981.

Novak RG, Troxler WL, Dehnke TH, "Recovering Energy from Hazardous Waste Incineration," Chemical Engineer Progress 91:146 (1984).

Oppelt ET, "Incineration of Hazardous Waste"; JAPCA; Volume 37, No. 5; May, 1987.

Santoleri JJ, "Energy Recovery-A By-Product of Hazardous Waste Incineration Systems," in Proceedings of the 15th Mid-Atlantic Industrial Waste Conference on Toxic and Hazardous Waste, 1983.

U.S. EPA, "Best Demonstrated Available Technology (BDAT) Background Document for F001-F005 Spent Solvents," Volume 1, EPA/530-SW-86-056, November 1986.

Vogel G, et al., "Incineration and Cement Kiln Capacity for Hazardous Waste Treatment," in Proceedings of the 12th Annual Research Symposium. Incineration and Treatment of Hazardous Wastes. Cincinnati, Ohio. April 1986.

The comparative method of measuring thermal conductivity has been proposed as an ASTM test method under the name "Guarded, Comparative, Longitudinal Heat Flow Technique". A thermal heat flow circuit is used which is the analog of an electrical circuit with resistances in series. A reference material is chosen to have a thermal conductivity close to that estimated for the sample. Reference standards (also known as heat meters) having the same cross-sectional dimensions as the sample are placed above and below the sample. An upper heater, a lower heater, and a heat sink are added to the "stack" to complete the heat flow circuit. See Figure 1.

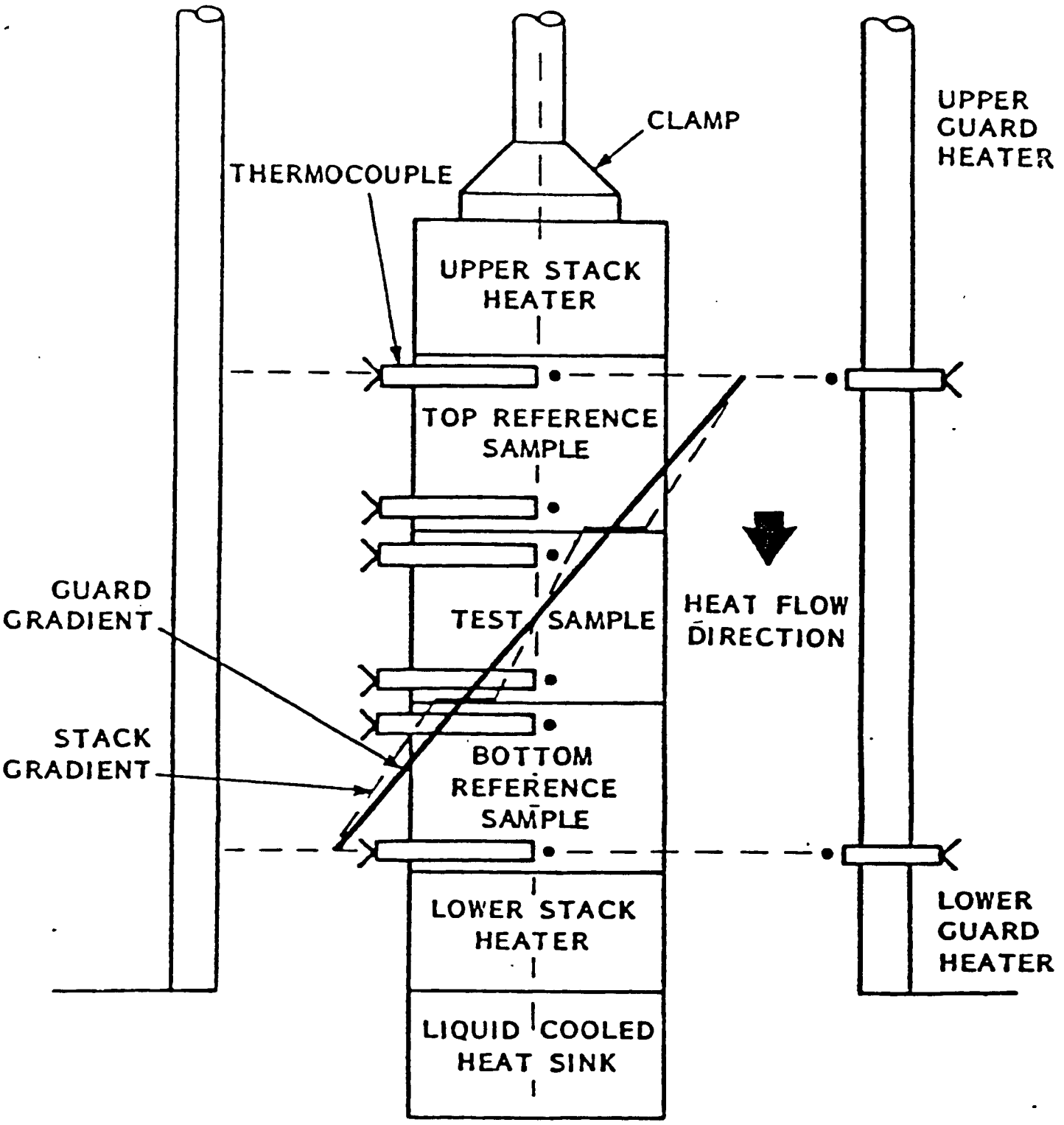

Figure 1.

SCHEMATIC DIAGRAM OF THE COMPARATIVE METHOD

The temperature gradients (analogous to potential differences) along the stack are measured with type K (chromel/alumel) thermocouples placed at known separations. The thermocouples are placed into holes or grooves in the references and also in the sample whenever the sample is thick enough to accommodate them.

For molten samples, pastes, greases, and other materials that must be contained, the material is placed into a cell consisting of a top and bottom of Pyrex 7740 and a containment ring of marinite. The sample is 2 inch in diameter and .5 inch thick. Thermocouples are not placed into the sample but rather the temperatures measured in the Pyrex are extrapolated to give the temperature at the top and bottom surfaces of the sample material. The Pyrex disks also serve as the thermal conductivity reference material.

The stack is clamped with a reproducible load to insure intimate contact between the components. In order to produce a linear flow of heat down the stack and reduce the amount of heat that flows radially, a guard tube is placed around the stack and the intervening space is filled with insulating grains or powder. The temperature gradient in the guard is matched to that in the stack to further reduce radial heat flow.

The comparative method is a steady state method of measuring thermal conductivity. When equilibrium is reached the heat flux (analogous to current flow) down the stack can be determined from the references. The heat into the sample is given by

$$Q_{in} = \lambda_{top}(dT/dx)_{top}$$

and the heat out of the sample is given by

$$Q_{out} = \lambda_{bottom}(dT/dx)_{bottom}$$

where

$$\lambda = \text{thermal conductivity}$$

$$dT/dx = \text{temperature gradient}$$

and top refers to the upper reference while bottom refers to the lower reference. If the heat was confined to flow just down the stack, then Q_{in} and Q_{out} would be equal. If Q_{in} and Q_{out} are in reasonable agreement, the average heat flow is calculated from

$$Q = (Q_{in} + Q_{out})/2$$

The sample thermal conductivity is then found from

$$\lambda_{sample} = Q/(dT/dx)_{sample}$$

The result for the K102 Activated Charcoal Waste tested here is given in Table 1. The sample was held at an average temperature of 42C with a 53C temperature drop across the sample for approximately 20 hours before the temperature profile became steady and the conductivity measured. At the conclusion of the test it appeared that some "drying" of the sample had occurred.

3.4.2 Solvent Extraction

Solvent extraction is a treatment technology used to remove a constituent from a waste by mixing the waste with a solvent that is immiscible with the waste and in which the waste constituent of concern is preferentially soluble. Solvent extraction is commonly called liquid extraction or liquid-liquid extraction. EPA also uses this term to refer to extraction of BDAT List organics from a solid waste. When BDAT List metals are extracted using acids, EPA uses the term acid leaching.

Applicability and Use of Solvent Extraction

Theoretically, solvent extraction has broad applicability in that it can be used for wastes that have high or low concentrations of a range of waste characteristics including total organic carbon, filterable solids, viscosity, and BDAT List metals content. The key to its use is whether the BDAT List constituents can be extracted from the waste matrix containing the constituents of concern. For a waste matrix with high filterable solids this would mean that the solids could be land disposed following solvent extraction. For a predominately liquid waste matrix with low filterable solids, the extracted liquid (referred to as the raffinate) could be reused. Solvent extraction can seldom be used without additional treatment (e.g., incineration) of the extract; however, some industries may be able to recycle the solvent stream contaminated with the BDAT List constituents back to the process.

Underlying Principles of Operation

For solvent extraction to occur, the BDAT List constituents of concern in the waste stream must be preferentially soluble in the solvent and the solvent must be essentially immiscible with the waste stream. In theory, the degree of separation that can be achieved is provided by the selectivity value; this value is the ratio of the equilibrium concentration of the constituent in the solvent to the equilibrium concentration of the constituent in the waste.

The solvent and waste stream are mixed to allow mass transfer of the constituent(s) from the waste stream to the solvent. The solvent and waste stream are then allowed to separate under quiescent conditions.

The solvent solution, containing the extracted contaminant is called the extract. The extracted waste stream with the contaminants removed is called the raffinate. The simplest extraction system comprises three components: (1) the solute, or the contaminant to be extracted; (2) the solvent; and (3) the nonsolute portion of the waste stream. For simple extractions, solute passes from the waste stream to the solvent phase. A density difference exists between the solvent and waste stream phases. The extract can be either the heavy phase or the light phase.

Description of Solvent Extraction Process

The simplest method of extraction is a single stage system. The solvent and waste stream are brought together; clean effluent and solvent are recovered without further extraction. The clean effluent is referred to as the raffinate, and the solvent containing the constituents that were removed from the waste stream are known as the extract. The amount of solute extracted is fixed by equilibrium relations and the quantity of solvent used. Single stage extraction is the least effective extraction system.

Another method of extraction is simple multistage contact extraction. In this system, the total quantity of solvent to be used is divided into several portions. The waste stream is contacted with each of these portions of fresh solvent in a series of successive steps or stages. Raffinate from the first extraction stage is contacted with fresh solvent in a second stage, and so on.

In countercurrent, multistage contact, fresh solvent and the waste stream enter at opposite ends of a series of extraction stages. Extract and raffinate layers pass continuously and countercurrently from stage to stage through the system.

In order to achieve a reasonable approximation of phase equilibrium, solvent extraction requires the intimate contacting of the phases. Several types of extraction systems are used for contact and separation; two of these, mixer-settler systems and column contactors, are discussed below.

(1) Mixer-Settler Systems. Mixer-settler systems are comprised of a mixing chamber for phase dispersion, followed by a settling chamber for phase separation. The vessels may be either vertical or horizontal. Dispersion in the mixing chamber occurs by pump circulation, nonmechanical in-line mixing, air agitation, or mechanical stirring. In a two-stage mixer-settler system the dispersed phase separates in a horizontal settler. The extract from the second settler is recycled to the first settler (see Figure 3-5). Extract properties such as density or specific constituent concentration may be monitored to determine when the extract must be sent to solvent recovery and fresh or regenerated solvent added to the system. Mixer-settler systems can handle solids or highly viscous liquids. Design scaleup is reliable, and mixer-settlers can handle difficult dispersion systems. Intense agitation to provide high rates of mass transfer can produce solvent-feed dispersions that are difficult to separate into distinct phases.

(2) Column Contactors. Packed and sieve-tray are two different types of column contactors that do not require mechanical agitation. Figure 3-6 presents schematics of the two types of extraction columns.

A packed extractor contains packing materials, such as saddles, rings, or structured packings of gauze or mesh. Mass transfer of the solute

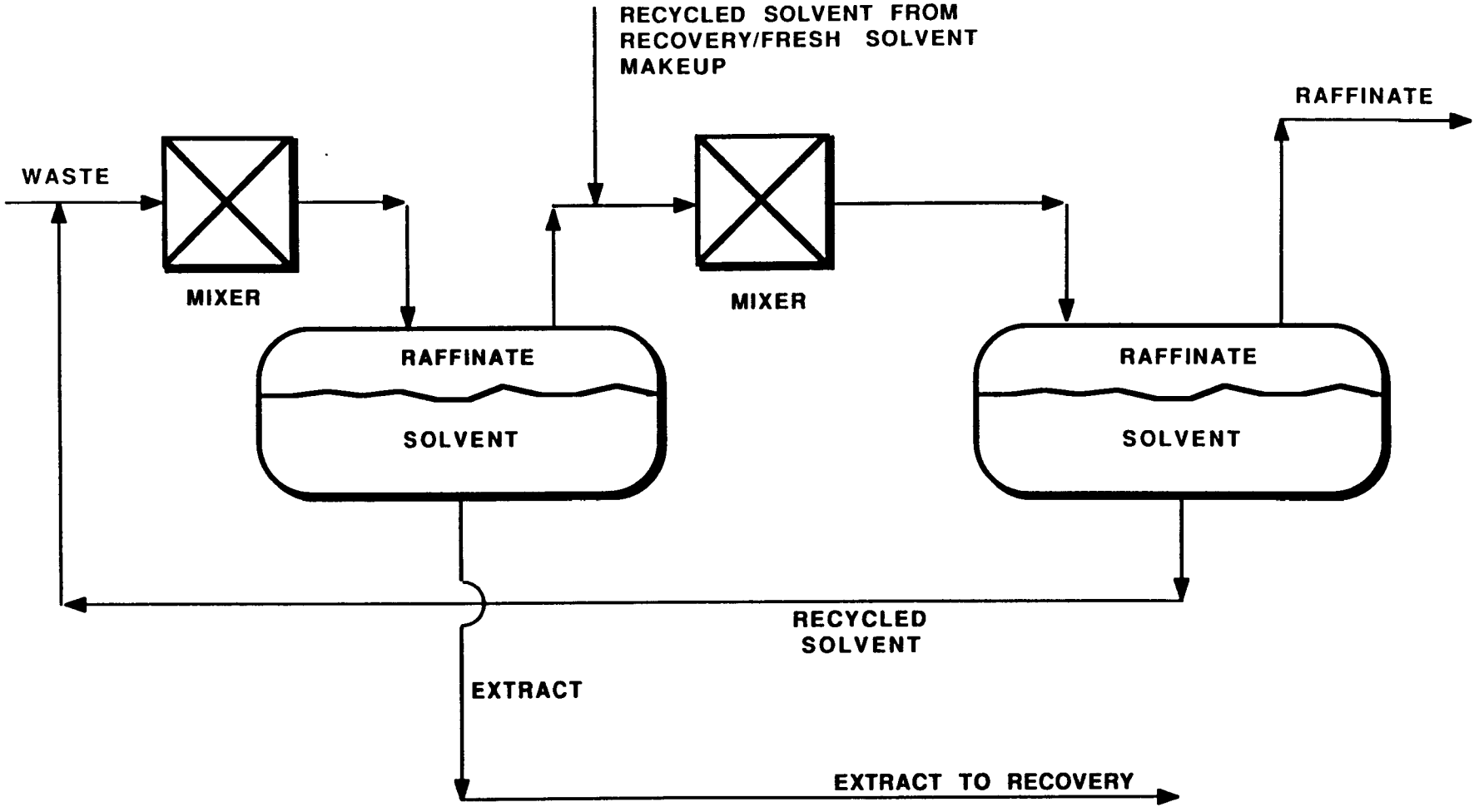

FIGURE 3-5

TWO-STAGE MIXER-SETTLER EXTRACTION SYSTEM

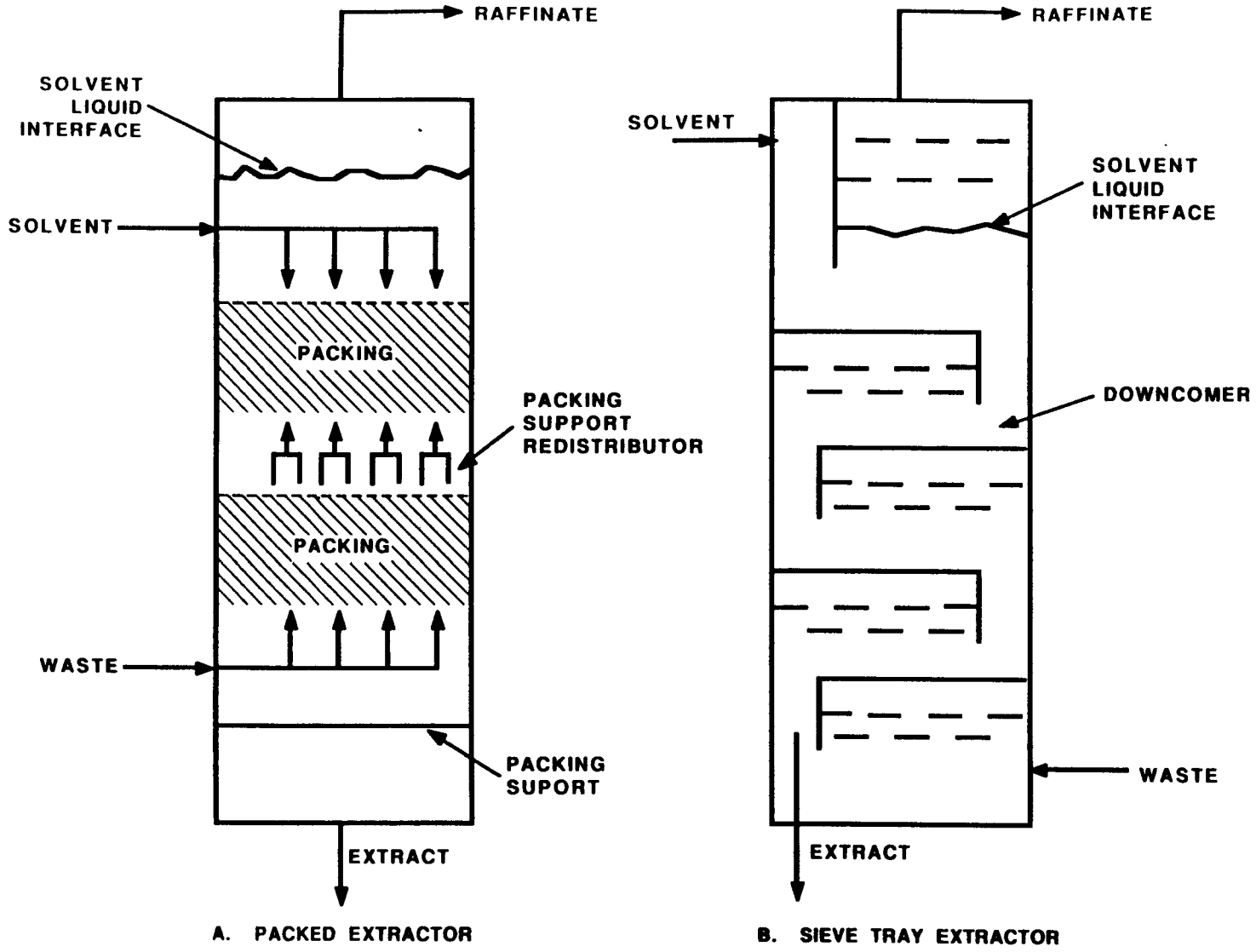

FIGURE 3-6

EXTRACTION COLUMNS WITH NONMECHANICAL AGITATION

to the extract is promoted because of breakup and distortion of the dispersed phase as it contacts the packing.

The sieve-tray extractor is similar to a sieve-tray column used in distillation. Tray perforations result in the formation of liquid droplets to aid the mass transfer process. The improved transfer is accomplished by the fact that the droplets allow for more intimate contact between extract and raffinate.

Waste Characteristics Affecting Performance

In determining whether solvent extraction is likely to achieve the same level of performance on an untested waste as a previously tested waste, the Agency will focus on the waste characteristics that provide an estimate of the selectivity value previously described. EPA believes that the selectivity value can best be estimated by analytically measuring the partitioning coefficients of the waste constituents of concern and the solubility of the waste matrix in the extraction solvent.

Accordingly, EPA will use partitioning coefficients and solubility of the waste matrix as surrogates for the selectivity value in making decisions regarding transfer of treatment standards.

Design and Operating Parameters

EPA's analysis of whether a solvent extraction system is well designed will focus on whether the BDAT List constituents are likely to be effectively separated from the waste. The particular design and operating parameters to be evaluated are: (1) the selection of a solvent, (2) equilibrium data, (3) temperature and pH, (4) mixing, and (5) settling time.

(1) The Selection of a Solvent. In assessing the design of a solvent extraction system, the most important aspect to evaluate is the solvent used and the basis on which the particular solvent was selected. Solvent selection is important because, as indicated previously, different waste constituents of concern will have different solubilities in various solvents, and it is the extent to which the waste constituents are preferentially soluble in the selected solvent that determines the effectiveness of this technology. In addition to this information, EPA would also want to review any empirical extraction data used to design the system.

(2) Equilibrium Data. For solvent extraction systems that are operated in a continuous mode, the extraction process will generally be conducted using a series of equilibrium stages as discussed previously. The number of equilibrium stages and the associated flow rates of the waste and solvent will be based on empirical equilibrium data. EPA will evaluate these data as part of assessing the design of the system. EPA would thus want to

know the type of mixers used and the basis for determining that this system would provide sufficient mixing.

(3) Temperature and pH. Temperature and pH changes can affect equilibrium conditions and, consequently, the performance of the extraction system. Thus, EPA would attempt to monitor and record these values on a continuous basis.

(4) Mixing. For mixer-settler type extraction processes, mixing determines the amount of contact between the two immiscible phases and, accordingly, the degree of mass transfer of the constituents to be extracted.

(5) Settling Time. For batch systems, adequate settling time must be allowed to ensure that separation of the phases has been completed. Accordingly, in assessing the design of a system, EPA would want to know settling time allowed and the basis for selection.

Solvent Extraction References

Hanson, C. August 26, 1968. Solvent extraction theory, equipment, commercial operations, and economics. Chem. Eng. p. 81.

De Renzo, D.J. (editor). 1978. Unit operations for treatment of hazardous industrial wastes. Park Ridge, N.J.: Noyes Data Corporation.

Gallacher, Lawrence V. February 1981. Liquid ion exchange in metal recovery and recycling. 3rd Conference on Advanced Pollution Control for the Metal Finishing Industry. U.S. EPA 600/2-81-028. pp. 39-41.

Hackman, E. 1978. Toxic organic chemicals, destruction and waste treatment. Park Ridge, N.J.: Noyes Data Corporation, pp. 109-111.

Humphrey, J.L., J.A. Rocha, and J.R. Fair. September 17, 1984. The essentials of extraction. Chemical Engineering. pp. 76-95.

Lo, Teh C., M.H.I. Baird, and C. Manson (editors). 1983. Handbook of solvent extraction. New York, N.Y.: John Wiley and Sons. pp. 53-89.

Perry, R.H. and C.H. Chilton. 1973. Chemical engineer's handbook, 5th edition. New York, NY: McGraw-Hill Book Company. pp. 15-1 to 15-24.

3.4.3 Sludge Filtration

Applicability and Use of Sludge Filtration

Sludge filtration, also known as sludge dewatering or cake-formation filtration, is a technology used on wastes that contain high concentrations of suspended solids, generally higher than one percent. The remainder of the waste is essentially water. Sludge filtration is applied to sludges, typically those that have settled to the bottom of clarifiers, for dewatering. After filtration, these sludges can be dewatered to 20 to 50 percent solids.

Underlying Principle of Operation

The basic principle of filtration is the separation of particles from a mixture of fluids and particles by a medium that permits the flow of the fluid but retains the particles. As would be expected, larger particles are easier to separate from the fluid than smaller particles. Extremely small particles, in the colloidal range, may not be filtered effectively and may appear in the treated waste. To mitigate this problem, the wastewater should be treated prior to filtration to modify the particle size distribution in favor of the larger particles, by the use of appropriate precipitants, coagulants, flocculants, and filter aids. The selection of the appropriate precipitant or coagulant is important because it affects the particles formed. For example, lime neutralization usually produces larger, less gelatinous particles than does caustic soda precipitation. For larger particles that become

too small to filter effectively because of poor resistance to shearing, shear resistance can be improved by the use of coagulants and flocculants. Also, if pumps are used to feed the filter, shear can be minimized by designing for a lower pump speed, or by use of a low shear type of pump.

Description of Sludge Filtration Process

For sludge filtration, settled sludge is either pumped through a cloth-type filter media (such as in a plate and frame filter that allows solid "cake" to build up on the media) or the sludge is drawn by vacuum through the cloth media (such as on a drum or vacuum filter, which also allows the solids to build). In both cases the solids themselves act as a filter for subsequent solids removal. For a plate and frame type filter, removal of the solids is accomplished by taking the unit off line, opening the filter and scraping the solids off. For the vacuum type filter, cake is removed continuously. For a specific sludge, the plate and frame type filter will usually produce a drier cake than a vacuum filter. Other types of sludge filters, such as belt filters, are also used for effective sludge dewatering.

Waste Characteristics Affecting Performance

The following characteristics of the waste will affect performance of a sludge filtration unit:

- size of particles, and
- type of particles.

(1) Size of particles. The smaller the particle size, the more the particles tend to go through the filter media. This is especially true for a vacuum filter. For a pressure filter (like a plate and frame), smaller particles may require higher pressures for equivalent throughput, since the smaller pore spaces between particles create resistance to flow.

(2) Type of particles. Some solids formed during metal precipitation are gelatinous in nature and cannot be dewatered well by cake-formation filtration. In fact, for vacuum filtration a cake may not form at all. In most cases solids can be made less gelatinous by use of the appropriate coagulants and coagulant dosage prior to clarification, or after clarification but prior to filtration. In addition, the use of lime instead of caustic soda in metal precipitation will reduce the formation of gelatinous solids. Also the addition of filter aids to a gelatinous sludge, such as lime or diatomaceous earth, will help significantly. Finally, precoating the filter with diatomaceous earth prior to sludge filtration will assist in dewatering gelatinous sludges.

Design and Operating Parameters

For sludge filtration, the following design and operating variables affect performance:

- type of filter selected,
- size of filter selected,
- feed pressure, and
- use of coagulants or filter aids.

(1) Type of filter. Typically, pressure type filters (such as a plate and frame) will yield a drier cake than a vacuum type filter and will also be more tolerant of variations in influent sludge characteristics. Pressure type filters, however, are batch operations, so that when cake is built up to the maximum depth physically possible (constrained by filter geometry), or to the maximum design pressure, the filter is turned off while the cake is removed. A vacuum filter is a continuous device (i.e., cake discharges continuously), but will usually be much larger than a pressure filter with the same capacity. A hybrid device is a belt filter, which mechanically squeezes sludge between two continuous fabric belts.

(2) Size of filter. As with in-depth filters, the larger the filter, the greater its hydraulic capacity and the longer the filter runs between cake discharge.

(3) Feed pressure. This parameter impacts both the design pore size of the filter and the design flow rate. It is important that in treating waste that the design feed pressure not be exceeded, otherwise particles may be forced through the filter medium resulting in ineffective treatment.

(4) Use of coagulants. Coagulants and filter aids may be mixed with filter feed prior to filtration. Their effect is particularly significant for vacuum filtration in that it may make the difference in a vacuum filter between no cake and a relatively dry cake. In a pressure filter, coagulants and filter aids will also significantly improve hydraulic capacity

and cake dryness. Filter aids, such as diatomaceous earth, can be precoated on filters (vacuum or pressure) for particularly difficult to filter sludges. The precoat layer acts somewhat like an in-depth filter in that sludge solids are trapped in the precoat pore spaces. Use of precoats and most coagulants or filter aids significantly increases the amount of sludge solids to be disposed of. However, polyelectrolyte coagulant usage usually does not increase sludge volume significantly because the dosage is low.

Sludge Filtration References

Eckenfelder, W.W. 1985. Wastewater Treatment, Chemical Engineering, 85:72.

Grain, Richard W. Solids 1981. Removal and Concentration. In Third Conference on Advanced Pollution Control for the Metal Finishing Industry. Cincinnati, Ohio. U.S. Environmental Protection Agency. pp. 56-62.

Kirk-Othmer. 1980. Encyclopedia of Chemical Technology. 3rd ed., New York. John Wiley and Sons, Vol. 10.

Perry, Robert H. and Cecil H. Chilton. 1973. Chemical Engineers' Handbook. Fifth Edition. New York. McGraw-Hill, Inc. Section 19.

3.4.4 Stabilization of Metals

Stabilization refers to a broad class of treatment processes that chemically reduce the mobility of hazardous constituents in a waste. Solidification and fixation are other terms that are sometimes used synonymously for stabilization or to describe specific variations within the broader class of stabilization. Related technologies are encapsulation and thermoplastic binding; however, EPA considers these technologies to be distinct from stabilization in that the operational principles are significantly different.

Applicability and Use of Stabilization

Stabilization is used when a waste contains metals that will leach from the waste when it is contacted by water. In general, this technology is applicable to wastes containing BDAT list metals, having a high filterable solids content, low TOC content, and low oil and grease content. This technology is commonly used to treat residuals generated from treatment of electroplating wastewaters. For some wastes, an alternative to stabilization is metal recovery.

Underlying Principles of Operation

The basic principle underlying this technology is that stabilizing agents and other chemicals are added to a waste in order to minimize the amount of metal that leaches. The reduced leachability is accomplished by the

formation of a lattice structure and/or chemical bonds that bind the metals to the solid matrix and, thereby, limit the amount of metal constituents that can be leached when water or a mild acid solution comes into contact with the waste material.

There are two principal stabilization processes used; these are cement-based and lime/pozzolan-based. A brief discussion of each is provided below. In both cement-based or lime/pozzolan-based techniques, the stabilizing process can be modified through the use of additives, such as silicates, that control curing rates or enhance the properties of the solid material.

Portland Cement-Based Process

Portland cement is a mixture of powdered oxides of calcium, silica, aluminum, and iron, produced by kiln burning of materials rich in calcium and silica at high temperatures (i.e., 1400°C to 1500°C). When the anhydrous cement powder is mixed with water, hydration occurs and the cement begins to set. The chemistry involved is complex because many different reactions occur depending on the composition of the cement mixture.

As the cement begins to set, a colloidal gel of indefinite composition and structure is formed. Over a period of time, the gel swells and forms a matrix composed of interlacing, thin, densely-packed silicate fibrils. Constituents present in the waste slurry (e.g., hydroxides and carbonates of various heavy metals), are incorporated into the interstices of the cement

matrix. The high pH of the cement mixture tends to keep metals in the form of insoluble hydroxide and carbonate salts. It has been hypothesized that metal ions may also be incorporated into the crystal structure of the cement matrix, but this hypothesis has not been verified.

Lime/Pozzolan-Based Process

Pozzolan, which contains finely divided, noncrystalline silica (e.g., fly ash or components of cement kiln dust), is a material that is not cementitious in itself, but becomes so upon the addition of lime. Metals in the waste are converted to silicates or hydroxides which inhibit leaching. Additives, again, can be used to reduce permeability and thereby further decrease leaching potential.

Description of Stabilization Processes

In most stabilization processes, the waste, stabilizing agent, and other additives, if used, are mixed and then pumped to a curing vessel or area and allowed to cure. The actual operation (equipment requirements and process sequencing) will depend on several factors such as the nature of the waste, the quantity of the waste, the location of the waste in relation to the disposal site, the particular stabilization formulation to be used, and the curing rate. After curing, the solid formed is recovered from the processing equipment and shipped for final disposal.

In instances where waste contained in a lagoon is to be treated, the material should be first transferred to mixing vessels where stabilizing agents are added. The mixed material is then fed to a curing pad or vessel. After curing, the solid formed is removed for disposal. Equipment commonly used also includes facilities to store waste and chemical additives. Pumps can be used to transfer liquid or light sludge wastes to the mixing pits and pumpable uncured wastes to the curing site. Stabilized wastes are then removed to a final disposal site.

Commercial concrete mixing and handling equipment generally can be used with wastes. Weighing conveyors, metering cement hoppers, and mixers similar to concrete batching plants have been adapted in some operations. Where extremely dangerous materials are being treated, remote-control and in-drum mixing equipment, such as that used with nuclear waste, can be employed.

Waste Characteristics Affecting Performance

In determining whether stabilization is likely to achieve the same level of performance on an untested waste as on a previously tested waste, the Agency will focus on the characteristics that inhibit the formation of either the chemical bonds or the lattice structure. The four characteristics EPA has identified as affecting treatment performance are the presence of (1) fine particulates, (2) oil and grease, (3) organic compounds, and (4) certain inorganic compounds.

(1) Fine Particulates. For both cement-based and lime/pozzolan-based processes, the literature states that very fine solid materials (i.e., those that pass through a No. 200 mesh sieve, 74 um particle size) can weaken the bonding between waste particles and cement by coating the particles. This coating can inhibit chemical bond formation and decreases the resistance of the material to leaching.

(2) Oil and Grease. The presence of oil and grease in both cement-based and lime/pozzolan-based systems results in the coating of waste particles and the weakening of the bonding between the particle and the stabilizing agent. This coating can inhibit chemical bond formation and thereby, decrease the resistance of the material to leaching.

(3) Organic Compounds. The presence of organic compounds in the waste interferes with the chemical reactions and bond formation which inhibit curing of the stabilized material. This results in a stabilized waste having decreased resistance to leaching.

(4) Sulfate and Chlorides. The presence of certain inorganic compounds will interfere with the chemical reactions, weakening bond strength and prolonging setting and curing time. Sulfate and chloride compounds may reduce the dimensional stability of the cured matrix, thereby increasing leachability potential.

Accordingly, EPA will examine these constituents when making decisions regarding transfer of treatment standards based on stabilization.

Design and Operating Parameters

In designing a stabilization system, the principal parameters that are important to optimize so that the amount of leachable metal constituents is minimized are (1) selection of stabilizing agents and other additives, (2) ratio of waste to stabilizing agents and other additives, (3) degree of mixing, and (4) curing conditions.

(1) Selection of stabilizing agents and other additives. The stabilizing agent and additives used will determine the chemistry and structure of the stabilized material and, therefore, will affect the leachability of the solid material. Stabilizing agents and additives must be carefully selected based on the chemical and physical characteristics of the waste to be stabilized. For example, the amount of sulfates in a waste must be considered when a choice is being made between a lime/pozzolan and a Portland cement-based system.

In order to select the type of stabilizing agents and additives, the waste should be tested in the laboratory with a variety of materials to determine the best combination.

(2) Amount of stabilizing agents and additives. The amount of stabilizing agents and additives is a critical parameter in that sufficient stabilizing materials are necessary in the mixture to bind the waste constituents of concern properly, thereby making them less susceptible to leaching. The appropriate weight ratios of waste to stabilizing agent and other additives are established empirically by setting up a series of laboratory tests that allow separate leachate testing of different mix ratios. The ratio of water to stabilizing agent (including water in waste) will also impact the strength and leaching characteristics of the stabilized material. Too much water will cause low strength; too little will make mixing difficult and, more importantly, may not allow the chemical reactions that bind the hazardous constituents to be fully completed.

(3) Mixing. The conditions of mixing include the type and duration of mixing. Mixing is necessary to ensure homogeneous distribution of the waste and the stabilizing agents. Both undermixing and overmixing are undesirable. The first condition results in a nonhomogeneous mixture; therefore, areas will exist within the waste where waste particles are neither chemically bonded to the stabilizing agent nor physically held within the lattice structure. Overmixing, on the other hand, may inhibit gel formation and ion adsorption in some stabilization systems. As with the relative amounts of waste, stabilizing agent, and additives within the system, optimal mixing conditions generally are determined through laboratory tests. During treatment it is important to monitor the degree (i.e., type and duration) of mixing to ensure that it reflects design conditions.

(4) Curing conditions. The curing conditions include the duration of curing and the ambient curing conditions (temperature and humidity). The duration of curing is a critical parameter to ensure that the waste particles have had sufficient time in which to form stable chemical bonds and/or lattice structures. The time necessary for complete stabilization depends upon the waste type and the stabilization used. The performance of the stabilized waste (i.e., the levels of constituents in the leachate) will be highly dependent upon whether complete stabilization has occurred. Higher temperatures and lower humidity increase the rate of curing by increasing the rate of evaporation of water from the solidification mixtures. However, if temperatures are too high, the evaporation rate can be excessive and result in too little water being available for completion of the stabilization reaction. The duration of the curing process should also be determined during the design stage and typically will be between 7 and 28 days.

Stabilization References

Ajax Floor Products Corp. n.d. Product literature: technical data sheets, Hazardous Waste Disposal System. P.O. Box 161, Great Meadows, N.J. 07838.

Austin, G.T. 1984. Shreve's chemical process industries, 5th ed., New York: McGraw-Hill.

Bishop, P.L., Ransom, S.B., and Grass, D.L. 1983. Fixation Mechanismsin Solidification/Stabilization of Inorganic Hazardous Wastes. In Proceedings of the 38th Industrial Waste Conference, 10-12 May 1983, at Purdue University, West Lafayette, Indiana.

Conner, J.R. 1986. Fixation and Solidification of Wastes. Chemical Engineering. Nov. 10, 1986.

Cullinane, M.J., Jr., Jones, L.W., and Malone, P.G. 1986. Handbook for stabilization/solidification of hazardous waste. U.S. Army Engineer Waterways Experiment Station. EPA report No. 540/2-86/001. Cincinnati, Ohio: U.S. Environmental Protection Agency.

Electric Power Research Institute. 1980. FGD sludge disposal manual, 2nd ed. Prepared by Michael Baker Jr., Inc. EPRI CS-1515 Project 1685-1, Palo Alto, California: Electric Power Research Institute.

Mishuck, E. Taylor, D.R., Telles, R. and Lubowitz, H. 1984. Encapsulation/ Fixation (E/F) mechanisms. Report No. DRXTH-TE-CR-84298. Prepared by S-Cubed under Contract No. DAAK11-81-C-0164.

Pojasek RB. 1979. "Solid-Waste Disposal: Solidification" Chemical Engineering 86(17): 141-145.

USEPA. 1980. U.S. Environmental Protection Agency. U.S. Army Engineer Waterways Experiment Station. Guide to the disposal of chemically stabilized and solidified waste. Prepared for MERL/ORD under Interagency Agreement No. EPA-IAG-D4-0569. PB81-181505, Cincinnati, Ohio.

3.4.5 Hexavalent Chromium Reduction

Applicability and Use of Hexavalent Chromium Reduction

The process of hexavalent chromium (Cr+6) reduction involves conversion from the hexavalent form to the trivalent form of chromium. This technology has wide application to hexavalent chromium wastes including plating solutions, stainless steel acid baths and rinses, "chrome conversion" coating process rinses, and chromium pigment manufacturing wastes. Because this technology requires the pH to be in the acidic range, it would not be applicable to a waste that contains significant amounts of cyanide or sulfide. In such cases, lowering of the pH can generate toxic gases such as hydrogen cyanide or hydrogen sulfide. It is important to note that additional treatment is required to remove trivalent chromium from solution.

Underlying Principles of Operation

The basic principle of treatment is to reduce the valence of chromium in solution (in the form of chromate or dichromate ions) from the valence state of six (+6) to the trivalent (+3) state. "Reducing agents" used to effect the reduction include sodium bisulfite, sodium metabisulfite, sulfur dioxide, sodium hydrosulfide, or the ferrous form of iron.

A typical reduction equation, using sodium sulfite as the reducing agent, is:

$$H_2Cr_2O_7 + 3Na_2SO_3 + (SO_4)_3 \text{ ---> } Cr_2(SO_4)_3 + 3Na_2SO_4 + 4H_2O$$

The reaction is usually accomplished at pH values in the range of 2 to 3.

At the completion of the chromium reduction step, the trivalent chromium compounds are precipitated from solution by raising the pH to a value exceeding about 8. The less soluble trivalent chromium (in the form of chromium hydroxide) is then allowed to settle from solution. The precipitation reaction is as follows:

$$Cr_2(SO_4)_3 + 3Ca(OH)_2 \text{ ---> } 2Cr(OH)_3 + CaSO_4$$

Description of Chromium Reduction Process

The chromium reduction treatment process can be operated in a batch or continuous mode. A batch system will consist of a reaction tank, a mixer to homogenize the contents of the tank, a supply of reducing agent, and a source of acid and base for pH control.

A continuous chromium reduction treatment system, as shown in Figure 3-7, will usually include a holding tank upstream of the reaction tank for flow and concentration equalization. It will also include instrumentation to automatically control the amount of reducing agent added and the pH of the reaction tank. The amount of reducing agent is controlled by the use of a sensor called an oxidation reduction potential (ORP) cell. The ORP sensor

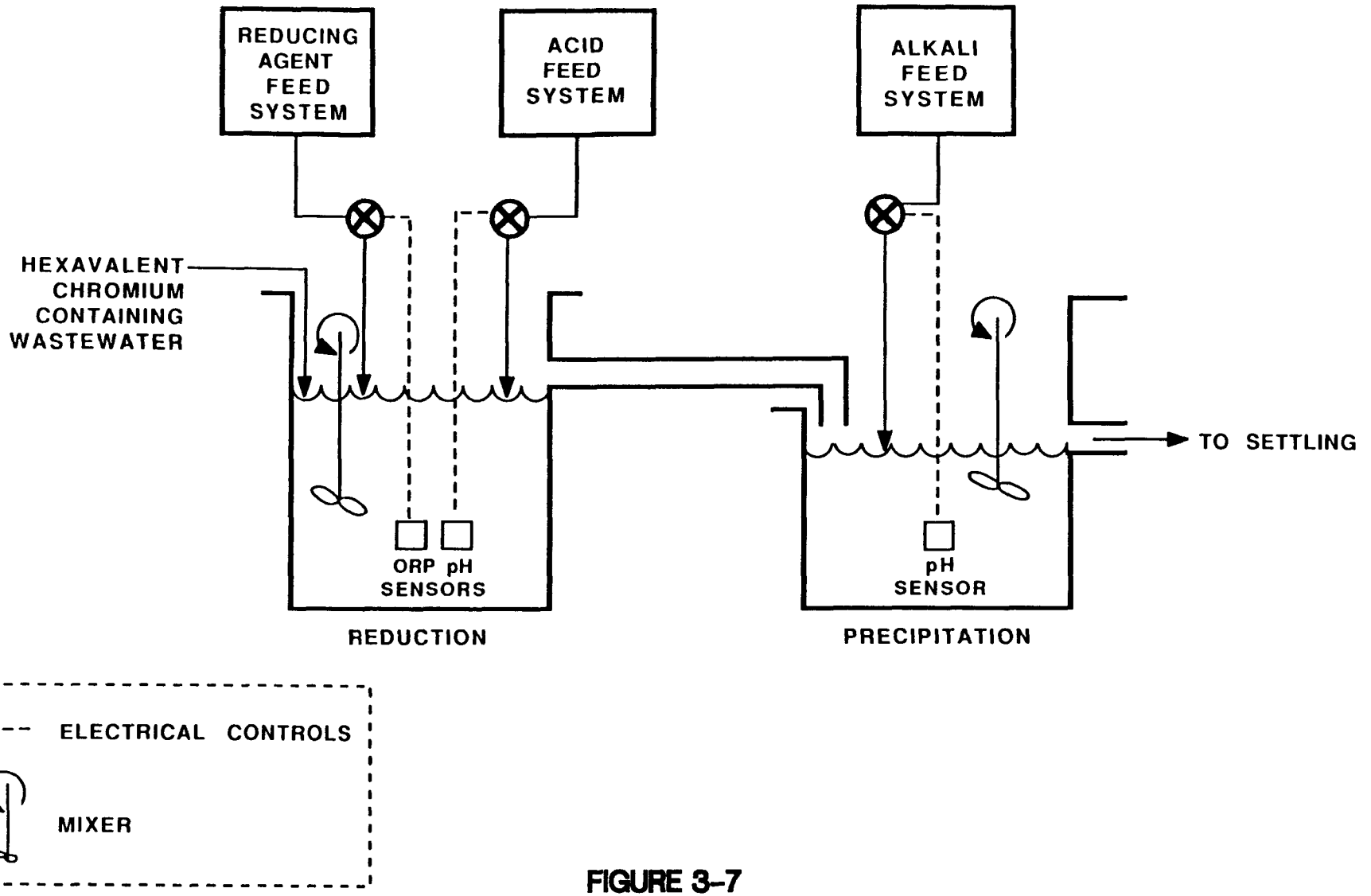

FIGURE 3-7
CONTINUOUS HEXAVALENT CHROMIUM REDUCTION SYSTEM

electronically measures, in millivolts, the level to which the redox reaction has proceeded at any given time. It must be noted though, that the ORP reading is very pH dependent. Consequently, if the pH is not maintained at a steady value, the ORP will vary somewhat, regardless of the level of chromate reduction.

Waste Characteristics Affecting Performance

In determining whether chromium reduction can treat an untested waste to the same level of performance as a previously tested waste, EPA will examine waste characteristics that affect the reaction involved with either lowering the pH or reducing the hexavalent chromium. EPA believes that such characteristics include the oil and grease content of the waste, total dissolved solids, and the presence of other compounds that would undergo reduction reaction.

(1) Oil and Grease. EPA believes that these compounds could potentially interfere the oxidation-reduction reactions, as well as cause monitoring problems by fouling of instrumentation (e.g., electrodes). Oil and grease concentrations can be measured by EPA Methods 9070 and 9071.

(2) Total Dissolved Solids. These compounds can interfere with the addition of treatment chemicals into solution and possibly cause monitoring problems.

(3) Other Reducible Compounds. These compounds would generally consist of other metals in the waste. Accordingly EPA will evaluate the type and concentration of other metals in the waste in evaluating transfer of treatment performances.

Design and Operating Parameters

The parameters that EPA will examine in assessing the design and operation of a chromium reduction treatment system are discussed below.

(1) Treated and Untreated Design Concentration. EPA will need to know the level of performance that the facility is designed to achieve in order to ensure that the design is consistent with best demonstrated practices. This parameter is important in that a system will not usually perform better than design. As well as knowing the treated design concentration, it is also important to know the characteristics of the untreated waste that the system is designed to handle. Accordingly, EPA will obtain data on the untreated wastes to ensure that waste characteristics fall within design specifications.

(2) Reducing Agent. The choice of a reducing agent establishes the chemical reaction upon which the chromium reduction system is based. The amount of reducing agent needs to be monitored and controlled in both batch and continuous systems. In batch systems, reducing agent is usually controlled by analysis of the hexavalent chromium remaining in solution. For

continuous systems, the ORP reading is used to monitor and control the addition of reducing agent.

ORP will slowly change until the correct amount of reducing agent has been added, at which point ORP will change rapidly, indicating reaction completion. The set point for the ORP monitor is approximately the reading just after the rapid change has begun. The reduction system must then be monitored periodically to determine whether the selected setpoint needs further adjustment.

(3) pH. For batch and continuous systems, pH is an important parameter because of its affect on the reduction reaction. For a batch system, it can be monitored intermittently during treatment. For continuous systems, the pH should be continuously monitored because of its affect on ORP. In evaluating the design and operation of a continuous chromium reduction system, it is important to know the pH on which the design ORP value is based, as well as, the designed ORP value.

(4) Retention Time. Retention time should be adequate to ensure that the hexavalent chromium reduction reaction goes to completion. In the case of the batch reactor, the retention time is varied by adjusting treatment time in the reaction tank. If the process is continuous, it is important to monitor the feed rate to ensure that the designed residence time is achieved.

Hexavalent Chromium Reduction References

Aldrich, James R. 1985. "Effects of pH and proportioning of ferrous and sulfide reduction chemicals on electroplating waste treatment sludge production." In Proceeding of the 39th Purdue Industrial Waste Conference, May 8, 9, 10, 1984. Stoneham, MA: Butterworth Publishers.

Cherry, Kenneth F. 1982. Plating Waste Treatment. Ann Arbor Science Publishers, Inc., Michigan.

Lanouette, Kenneth H. 1977. "Heavy metals removal." Chemical Engineering, October 17, 1977, pp. 73-80.

Patterson, James W. 1985. Industrial Wastewater Treatment Technology, 2nd Ed. Butterworth Publishers; Stoneham, MA.

Rudolfs, William. 1953. Industrial Wastes. Their Disposal and Treatment. L.E.C. Publishers Inc., Valley Stream, NY. p. 294

3.4.6 Chemical Precipitation

Applicability and Use of Chemical Precipitation

Chemical precipitation is used when dissolved metals are to be removed from solution. This technology can be applied to a wide range of wastewaters containing dissolved BDAT list metals and other metals as well. This treatment process has been practiced widely by industrial facilities since the 1940s.

Underlying Principles of Operation

The underlying principle of chemical precipitation is that metals in wastewater are removed by the addition of a treatment chemical that converts the dissolved metal to a metal precipitate. This precipitate is less soluble than the original metal compound, and therefore settles out of solution, leaving a lower concentration of the metal present in the solution. The principal chemicals used to convert soluble metal compounds to the less soluble forms include: lime ($Ca(OH)_2$), caustic ($NaOH$), sodium sulfide (Na_2S), and, to a lesser extent, soda ash (Na_2CO_3), phosphate, and ferrous sulfide (FeS).

The solubility of a particular compound will depend on the extent to which the electrostatic forces holding the ions of the compound together can be overcome. The solubility will change significantly with temperature; most

metal compounds are more soluble as the temperature increases. Additionally, the solubility will be affected by the other constituents present in a waste. As a general rule, nitrates, chlorides, and sulfates are more soluble than hydroxides, sulfides, carbonates, and phosphates.

An important concept related to treatment of the soluble metal compounds is pH. This term provides a measure of the extent to which a solution contains either an excess of hydrogen or hydroxide ions. The pH scale ranges from 0 to 14; with 0 being the most acidic, 14 representing the highest alkalinity or hydroxide ion (OH^-) content, and 7.0 being neutral.

When hydroxide is used, as is often the case, to precipitate the soluble metal compounds, the pH is frequently monitored to ensure that sufficient treatment chemicals are added. It is important to point out that pH is not a good measure of treatment chemical addition for compounds other than hydroxides; when sulfide is used, for example, facilities might use an oxidation-reduction potential meter (ORP) correlation to ensure that sufficient treatment chemical is used.

Following conversion of the relatively soluble metal compounds to metal precipitates, the effectiveness of chemical precipitation is a function of the physical removal, which usually relies on a settling process. A particle of a specific size, shape, and composition will settle at a specific velocity, as described by Stokes' Law. For a batch system, Stokes' law is a good predictor of settling time because the pertinent particle parameters

remain essentially constant. Nevertheless, in practice, settling time for a batch system is normally determined by empirical testing. For a continuous system, the theory of settling is complicated by factors such as turbulence, short-circuiting, and velocity gradients, increasing the importance of the empirical tests.

Description of Chemical Precipitation Process

The equipment and instrumentation required for chemical precipitation varies depending on whether the system is batch or continuous. Both operations are discussed below; a schematic of the continuous system is shown in Figure 3-8.

For a batch system, chemical precipitation requires only a feed system for the treatment chemicals and a second tank where the waste can be treated and allowed to settle. When lime is used, it is usually added to the reaction tank in a slurry form. In a batch system, the supernate is usually analyzed before discharge, thus minimizing the need for instrumentation.

In a continuous system, additional tanks are necessary, as well as instrumentation to ensure that the system is operating properly. In this system, the first tank that the wastewater enters is referred to as an equalization tank. This is where the waste can be mixed in order to provide more uniformity, minimizing wide swings in the type and concentration of constituents being sent to the reaction tank. It is important to reduce the

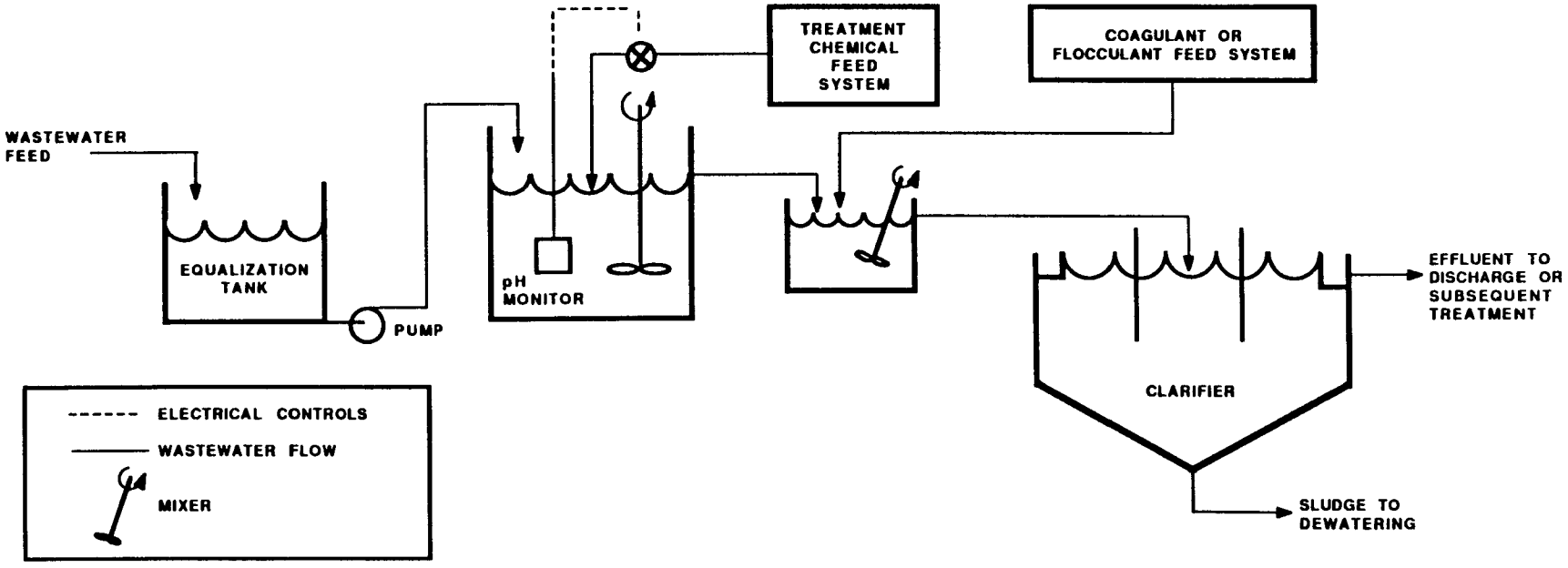

FIGURE 3-8

CONTINUOUS CHEMICAL PRECIPITATION

variability of the waste sent to the reaction tank because control systems inherently are limited with regard to the maximum fluctuations that can be managed.

Following equalization, the waste is pumped to a reaction tank where treatment chemicals are added; this is done automatically by using instrumentation that senses the pH of the system and then pneumatically adjusts the position of the treatment chemical feed valve such that the design pH value is achieved. Both the complexity and the effectiveness of the automatic control system will vary depending on the variation in the waste and the pH range that is needed to properly treat the waste.

An important aspect of the reaction tank design is that it be well-mixed so that the waste and the treatment chemicals are both dispersed throughout the tank, in order to ensure commingling of the reactant and the treatment chemicals. In addition, effective dispersion of the treatment chemicals throughout the tank is necessary to properly monitor and, thereby, control the amount of treatment chemicals added.

After the waste is reacted with the treatment chemical, it flows to a quiescent tank where the precipitate is allowed to settle and subsequently be removed. Settling can be chemically assisted through the use of flocculating compounds. Flocculants increase the particle size and density of the precipitated solids, both of which increase the rate of settling. The particular flocculating agent that will best improve settling characteristics will vary depending on the particular waste; selection of the flocculating

agent is generally accomplished by performing laboratory bench tests. Settling can be conducted in a large tank by relying solely on gravity or be mechanically assisted through the use of a circular clarifier or an inclined separator. Schematics of the latter two separators are shown in Figures 3-9 and 3-10.

Filtration can be used for further removal of precipitated residuals both in cases where the settling system is underdesigned and in cases where the particles are difficult to settle. Polishing filtration is discussed in a separate technology section.

Waste Characteristics Affecting Performance

In determining whether chemical precipitation is likely to achieve the same level of performance on an untested waste as a previously tested waste, we will examine the following waste characteristics: (1) the concentration and type of the metal(s) in the waste, (2) the concentration of suspended solids (TSS), (3) the concentration of dissolved solids (TDS), (4) whether the metal exists in the wastewater as a complex, and (5) the oil and grease content. These parameters either affect the chemical reaction of the metal compound, the solubility of the metal precipitate, or the ability of the precipitated compound to settle.

(1) Concentration and Type of Metals. For most metals, there is a specific pH at which the metal hydroxide is least soluble. As a result, when

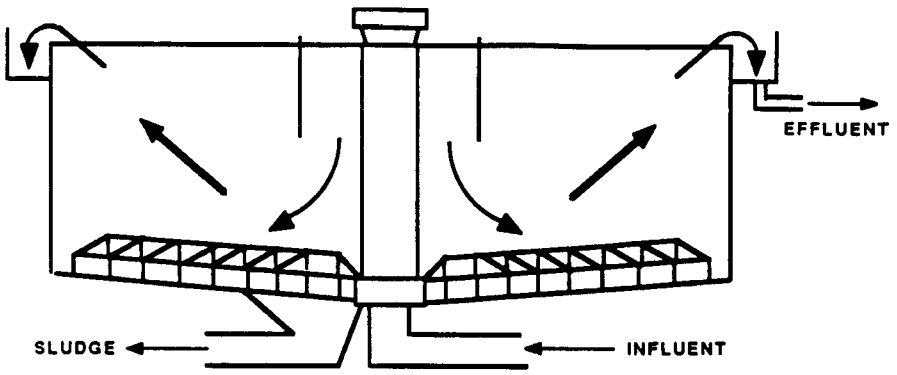

CENTER FEED CLARIFIER WITH SCRAPER SLUDGE REMOVAL SUSTEM

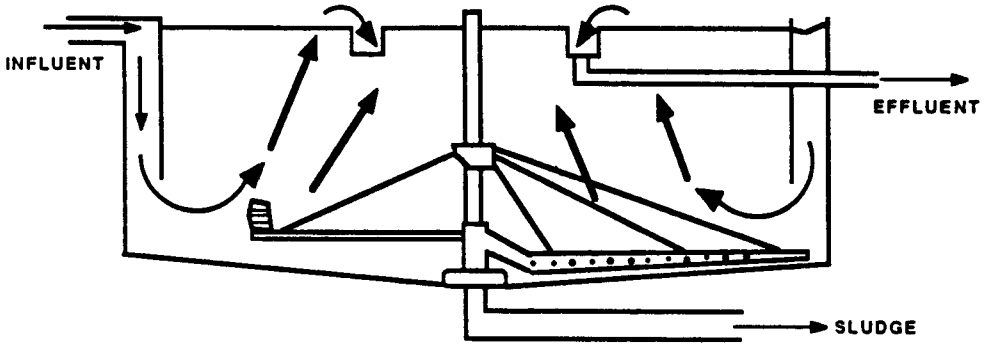

RIM FEED - CENTER TAKEOFF CLARIFIER WITH
HYDRAULIC SUCTION SLUDGE REMOVAL SYSTEM

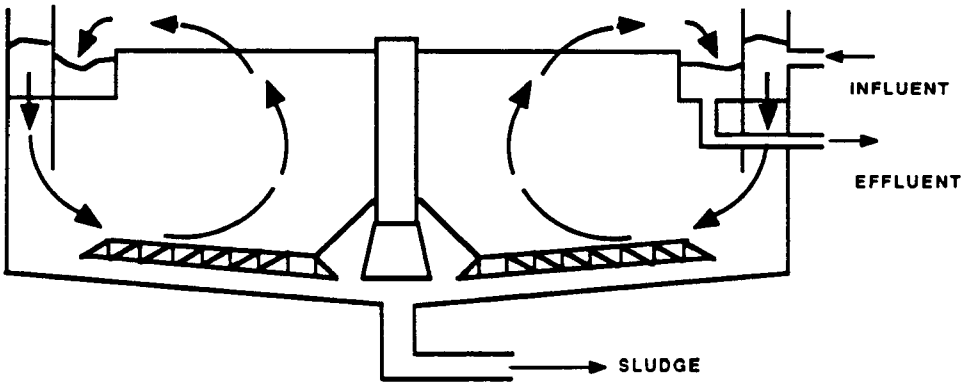

RIM FEED - RIM TAKEOFF CLARIFIER

FIGURE 3-9
CIRCULAR CLARIFIERS

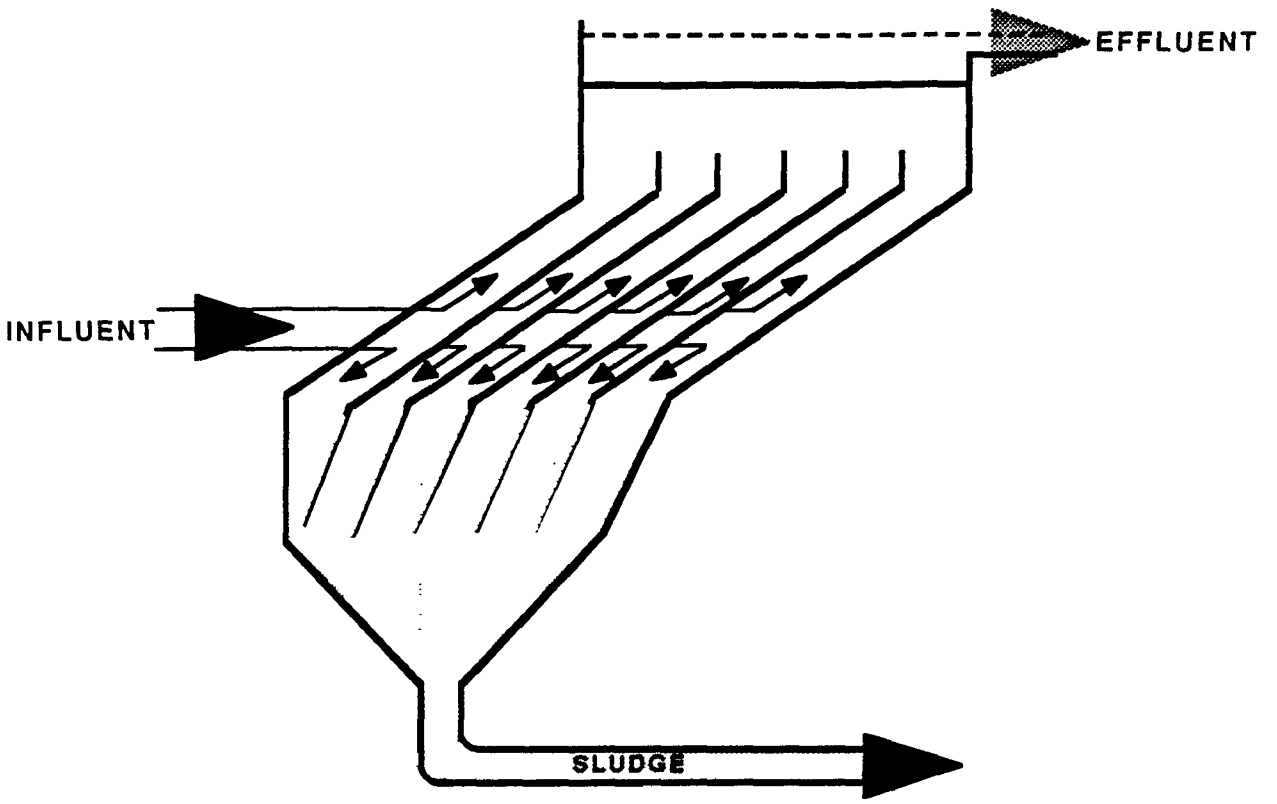

FIGURE 3-10

INCLINED PLANE SETTLER

a waste contains a mixture of many metals, it is not possible to operate a treatment system at a single pH which is optimal for the removal of all metals. The extent to which this affects treatment depends on the particular metals to be removed, and their concentrations. An alternative can be to operate multiple precipitations, with intermediate settling, when the optimum pH occurs at markedly different levels for the metals present. The individual metals and their concentrations can be measured using EPA Method 6010.

(2) Concentration and type of total suspended solids (TSS). Certain suspended solid compounds are difficult to settle because of either their particle size or shape. Accordingly, EPA will evaluate this characteristic in assessing transfer of treatment performance. Total suspended solids can be measured by EPA Wastewater Test Method 160.2.

(3) Concentration of total dissolved solids (TDS). Available information shows that total dissolved solids can inhibit settling. The literature states that poor flocculation is a consequence of high TDS and shows that higher concennntrations of total suspended solids are found in treated residuals. Poor flocculation can adversely affect the degree to which precipitated particles are removed. Total dissolved solids can be measured by EPA Wastewater Test Method 160.1.

(4) Complexed metals. Metal complexes consist of a metal ion surrounded by a group of other inorganic or organic ions or molecules (often

called ligands). In the complexed form, the metals have a greater solubility and, therefore, may not be as effectively removed from solution by chemical precipitation. EPA does not have an analytical method to determine the amount of complexed metals in the waste. The Agency believes that the best measure of complexed metals is to analyze for some common complexing compounds (or complexing agents) generally found in wastewater for which analytical methods are available. These complexing agents include ammonia, cyanide, and EDTA. The analytical method for cyanide is EPA Method 9010. The method for EDTA is ASTM Method D3113. Ammonia can be analyzed using EPA Wastewater Test Method 350.

(5) Oil and grease content. The oil and grease content of a particular waste directly inhibits the settling of the precipitate. Suspended oil droplets float in water and tend to suspend particles such as chemical precipitates that would otherwise settle out of the solution. Even with the use of coagulants or flocculants, the separation of the precipitate is less effective. Oil and grease content can be measured by EPA Method 9071.

Design and Operating Parameters

The parameters that EPA will evaluate when determining whether a chemical precipitation system is well designed are: (1) design value for treated metal concentrations, as well as other characteristics of the waste used for design purposes (e.g., total suspended solids), (2) pH, (3) residence time, (4) choice of treatment chemical, and (5) choice of

coagulant/flocculant. Below is an explanation of why EPA believes these parameters are important to a design analysis; in addition, EPA explains why other design criteria are not included in EPA's analysis.

(1) Treated and untreated design concentrations. EPA pays close attention to the treated concentration the system is designed to achieve when determining whether to sample a particular facility. Since the system will seldom out-perform its design, EPA must evaluate whether the design is consistent with best demonstrated practice.

The untreated concentrations that the system is designed to treat are important in evaluating any treatment system. Operation of a chemical precipitation treatment system with untreated waste concentrations in excess of design values can easily result in poor performance.

(2) pH. The pH is important, because it can indicate that sufficient treatment chemical (e.g., lime) is added to convert the metal constituents in the untreated waste to forms that will precipitate. The pH also affects the solubility of metal hydroxides and sulfides, and therefore directly impacts the effectiveness of removal. In practice, the design pH is determined by empirical bench testing, often referred to as "jar" testing. The temperature at which the "jar" testing is conducted is important in that it also affects the solubility of the metal precipitates. Operation of a treatment system at temperatures above the design temperature can result in poor performance. In assessing the operation of a chemical precipitation

system, EPA prefers continuous data on the pH and periodic temperature conditions throughout the treatment period.

(3) Residence time. The residence time is important because it impacts the completeness of the chemical reaction to form the metal precipitate and, to a greater extent, amount of precipitate that settles out of solution. In practice, it is determined by "jar" testing. For continuous systems, EPA will monitor the feed rate to ensure that the system is operated at design conditions. For batch systems, EPA will want information on the design parameter used to determine sufficient settling time (e.g., total suspended solids).

(4) Choice of treatment chemical. A choice must be made as to what type of precipitating agent (i.e., treatment chemical) will be used. The factor that most affects this choice is the type of metal constituents to be treated. Other design parameters, such as pH, residence time, and choice of coagulant/flocculant agents, are based on the selection of the treatment chemical.

(5) Choice of coagulant/flocculant. This is important because these compounds improve the settling rate of the precipitated metals and allows for smaller systems (i.e., lower retention time) to achieve the same degree of settling as a much larger system. In practice, the choice of the best agent and the required amount is determined by "jar" testing.

(6) Mixing. The degree of mixing is a complex assessment which includes, among other things, the energy supplied, the time the material is mixed, and the related turbulence effects of the specific size and shape of the tank. EPA will, however, consider whether mixing is provided and whether the type of mixing device is one that could be expected to achieve uniform mixing. For example, EPA may not use data from a chemical precipitation treatment system where an air hose was placed in a large tank to achieve mixing.

Chemical Precipitation References

Cherry, Kenneth F. 1982. Plating Waste Treatment. Ann Arbor, MI; Ann Arbor Science, Inc. pp 45-67.

Cushnie, George C., Jr. 1985. Electroplating Wastewater Pollution Control Technology. Park Ridge, NJ; Noyes Publications. pp 48-62, 84-90.

Cushnie, George C., Jr. 1984. Removal of Metals from Wastewater: Neutralization and Precipitation. Park Ridge, NJ; Noyes Publications. pp 55-97.

U.S. EPA, "Treatability Manual," Volume III, Technology for Control/Removal of Pollutnats, EPA-600 /2-82-001C, January 1983. pp 111.3.1.3-2.

Gurnham, C.F. 1955. Principles of Industrial Waste Treatment. New York; John Wiley and Sons. pp 224-234.

Kirk-Othmer. 1980. Encyclopedia of Chemical Technology, 3rd ed., "Flocculation", Vol. 10. New York; John Wiley and Sons. pp 489-516.

Table 3-1

TREATMENT PERFORMANCE DATA COLLECTED BY EPA FOR K048 AND K051
PLANT A-FLUIDIZED BED INCINERATION

Sample Set #1

Detected BDAT Organic Constituents	Untreated Waste: K048* Concentration mg/kg (ppm)	Untreated Waste: K051 Concentration mg/kg (ppm)	Treated Waste: Fluidized Bed Incinerator Ash Concentration mg/kg (ppm)
VOLATILES			
4. Benzene	<14	<14	<2
21. Dichlorodifluoromethane	310	<14	<2
226. Ethyl benzene	46	48	<2
38. Methylene chloride	<70	<70	<10
43. Toluene	120	50	3
47. Trichloroethene	<14	<14	<2
215-217. Xylene (total)	120	80	<2
SEMIVOLATILES			
52. Acenaphthene	<20	33	<0.2
59. Benz(a)anthracene	<20	29	<0.2
70. Bis(2-ethylhexyl)phthalate	<20	28	<1.0
80. Chrysene	22	46	<0.2
98. Di-n-butyl phthalate	67	150	<1.0
109. Fluorene	31	33	<0.2
121. Naphthalene	100	160	<0.2
141. Phenanthrene	85	120	<0.2
145. Pyrene	35	66	<0.2

*K048 is a dewatered mixture of DAF float (K048) and waste biosludge.

Table 3-1 (Continued)

TREATMENT PERFORMANCE DATA COLLECTED BY EPA FOR K048 AND K051
PLANT A - FLUIDIZED BED INCINERATION

Sample Set #1 (Continued)

Detected BDAT Metal and Inorganic Constituents	Untreated Waste		Treated Waste	
			Fluidized Bed Incinerator Ash	
	K048* Concentration mg/kg (ppm)	K051 Concentration mg/kg (ppm)	Concentration mg/kg (ppm)	TCLP mg/L (ppm)
154. Antimony	<6	9	16	0.06
155. Arsenic	6.1	8.2	14	0.016
156. Barium	63	120	130	0.18
157. Beryllium	<0.1	<0.1	<0.1	<0.001
158. Cadmium	0.6	1.6	2.4	<0.003
221. Chromium (hexavalent)	<0.05	22	21	NA
159. Chromium (total)	890	730	1400	2.2
160. Copper	52	150	190	0.02
161. Lead	400	940	940	<0.05
162. Mercury	<0.02	0.19	<0.02	0.0003
163. Nickel	13	36	60	<0.02
164. Selenium	10	1.6	<0.3	0.033
165. Silver	<0.9	<0.9	<4	<0.009
167. Vanadium	430	260	690	2.8
168. Zinc	420	820	1000	0.079
INORGANICS				
169. Total cyanide	0.7	0.8	<0.1	
171. Sulfide	130	2900	<50	

NA = Not Analyzed

* K048 is a dewatered mixture of DAF float (K048) and waste biosludge.

Table 3-1 (Continued)

TREATMENT PERFORMANCE DATA COLLECTED BY EPA FOR K048 AND K051
PLANT A-FLUIDIZED BED INCINERATION

Sample Set #1 (Continued)

Design and Operating Parameters	Nominal Operating Range	Operating Range During Sampling Episode
Bed Temperature (F)+	1200-1300 (1400 max.)	1213-1240
Freeboard Temperature (F)+	1250-1350 (1450 max.)	1240-1253
API Separator Sludge Feed Rate (gpm)	0-24	22.3
Undewatered DAF Float Mixture Feed Rate (gpm)	30-90	43
Constriction Plate Pressure Differential (In. H_2O)+	15-20	10.7-18.7
Fluidized Bed Pressure Differential (In. H_2O)+	60-100	90.4-102.4
O_2 (% Volume)	NA	8.2-16.2
CO (ppm-Volume)	35-800	50-135
CO_2 (% Volume)	NA	2.2-9.0

+Strip charts for this parameter are included in Appendix E.

NA Not applicable

Table 3-2

TREATMENT PERFORMANCE DATA COLLECTED BY EPA FOR K048 AND K051
PLANT A - FLUIDIZED BED INCINERATION

Sample Set #2

Detected BDAT Organic Constituents	Untreated Waste K048* Concentration mg/kg (ppm)	Untreated Waste K051 Concentration mg/kg (ppm)	Treated Waste Fluidized Bed Incinerator Ash Concentration mg/kg (ppm)
VOLATILES			
4. Benzene	<14	<14	<2
21. Dichlorodifluoromethane	260	<14	<2
226. Ethyl benzene	120	46	<2
38. Methylene chloride	<70	<70	<10
43. Toluene	22	44	<2
47. Trichloroethene	<14	<14	<2
215-217. Xylene (total)	110	71	<2
SEMIVOLATILES			
52. Acenaphthene	<20	<20	<0.2
59. Benz(a)anthracene	<20	25	<0.2
70. Bis(2-ethylhexyl)phthalate	<20	<20	<1.0
80. Chrysene	<20	47	<0.2
98. Di-n-butyl phthalate	74	73	<1.0
109. Fluorene	31	37	<0.2
121. Naphthalene	110	160	<0.2
141. Phenanthrene	79	120	<0.2
145. Pyrene	31	67	<0.2

*K048 is a dewatered mixture of DAF float (K048) and waste biosludge.

Table 3-2 (Continued)

TREATMENT PERFORMANCE DATA COLLECTED BY EPA FOR K048 AND K051
PLANT A - FLUIDIZED BED INCINERATION

Sample Set #2 (Continued)

Detected BDAT Metal and Inorganic Constituents	Untreated Waste		Treated Waste	
			Fluidized Bed Incinerator Ash	
	K048* Concentration mg/kg (ppm)	K051 Concentration mg/kg (ppm)	Concentration mg/kg (ppm)	TCLP mg/L (ppm)
METALS				
154. Antimony	7	<6	13	0.06
155. Arsenic	5.4	6.7	19	0.008
156. Barium	67	73	160	0.24
157. Beryllium	<0.1	<0.1	<0.1	<0.001
158. Cadmium	0.7	1.3	3	<0.003
221. Chromium (hexavalent)	<0.05	<0.05	24	NA
159. Chromium (total)	940	860	1500	2.6
160. Copper	55	150	240	0.02
161. Lead	390	670	1100	<0.05
162. Mercury	0.11	0.23	<0.02	<0.0002
163. Nickel	14	30	74	<0.02
164. Selenium	9.9	1.1	<0.3	<0.02
165. Silver	<0.9	<0.9	<4.0	<0.009
167. Vanadium	450	290	730	2.5
168. Zinc	450	580	1100	0.086
INORGANICS				
169. Total cyanide	<0.1	0.5	0.4	
171. Sulfide	200	3600	<50	

NA = Not analyzed

* K048 is a dewatered mixture of DAF float (K048) and waste biosludge.

Table 3-2 (Continued)

TREATMENT PERFORMANCE DATA COLLECTED BY EPA FOR K048 AND K051
PLANT A - FLUIDIZED BED INCINERATION

Sample Set #2 (Continued)

Design and Operating Parameters	Nominal Operating Range	Operating Range During Sampling Episode
Bed Temperature (F)+	1200-1300 (1400 max.)	1227-1323
Freeboard Temperature (F)+	1250-1350 (1450 max.)	1253-1293
API Separator Sludge Feed Rate (gpm)	0-24	22.3
Undewatered DAF Float Mixture Feed Rate (gpm)	30-90	53
Constriction Plate Pressure Differential (In. H_2O)+	15-20	8.7-18.0
Fluidized Bed Pressure Differential (In. H_2O)+	60-100	91.2-104.0
O_2 (% Volume)	NA	9.2-16.0
CO (ppm-Volume)	35-800	80-355
CO_2 (% Volume)	NA	2.3-8.1

+Strip charts for this parameter are included in Appendix E.

NA = Not applicable.

Table 3-3

TREATMENT PERFORMANCE DATA COLLECTED BY EPA FOR K048 AND K051
PLANT A - FLUIDIZED BED INCINERATION

Sample Set #3

Detected BDAT Organic Constituents	Untreated Waste K048* Concentration mg/kg (ppm)	Untreated Waste K051 Concentration mg/kg (ppm)	Treated Waste Fluidized Bed Incinerator Ash Concentration mg/kg (ppm)
VOLATILES			
4. Benzene	<14	<14	<2
21. Dichlorodifluoromethane	<14	<14	<2
226. Ethyl benzene	33	52	<2
38. Methylene chloride	<70	<70	<10
43. Toluene	59	42	<2
47. Trichloroethene	<14	<14	<2
215-217. Xylene (total)	100	73	<2
SEMIVOLATILES			
52. Acenaphthene	<20	<20	<0.2
59. Benz(a)anthracene	<20	22	<0.2
70. Bis(2-ethylhexyl) phthalate	<20	30	<1.0
80. Chrysene	21	45	<0.2
98. Di-n-butyl phthalate	160	200	<1.0
109. Fluorene	32	35	<0.2
121. Naphthalene	110	150	<0.2
141. Phenanthrene	84	110	<0.2
145. Pyrene	33	62	<0.2

*K048 is a dewatered mixture of DAF float (K048) and waste biosludge.

Table 3-3 (Continued)

TREATMENT PERFORMANCE DATA COLLECTED BY EPA FOR K048 AND K051
PLANT A - FLUIDIZED BED INCINERATION

Sample Set #3 (Continued)

Detected BDAT Metal and Inorganic Constituents	Untreated Waste		Treated Waste	
			Fluidized Bed Incinerator Ash	
	K048* Concentration mg/kg (ppm)	K051 Concentration mg/kg (ppm)	Concentration mg/kg (ppm)	TCLP mg/L (ppm)
METALS				
154. Antimony	<6	18	13	0.09
155. Arsenic	5.7	9.7	13	0.022
156. Barium	68	100	140	0.17
157. Beryllium	<0.1	<0.1	0.5	<0.001
158. Cadmium	0.4	1.5	2	<0.003
221. Chromium (hexavalent)	<0.05	<0.05	23	NA
159. Chromium (total)	960	900	1300	2.1
160. Copper	56	160	200	0.02
161. Lead	410	790	1100	<0.05
162. Mercury	0.12	0.28	<0.02	<0.0002
163. Nickel	16	35	51	<0.02
164. Selenium	7.5	1.2	<0.3	0.085
165. Silver	<0.9	< 0.5	<4	<0.009
167. Vanadium	460	300	690	3.1
168. Zinc	450	670	1000	0.087
INORGANICS				
169. Total cyanide	<0.1	<0.1	<0.1	
171. Sulfide	2300	3200	<50	

NA = Not Analyzed

* K048 is a dewatered mixture of DAF float (K048) and waste biosludge.

Table 3-3 (Continued)

TREATMENT PERFORMANCE DATA COLLECTED BY EPA FOR K048 AND K051
PLANT A - FLUIDIZED BED INCINERATION

Sample Set #3 (Continued)

Design and Operating Parameters	Nominal Operating Range	Operating Range During Sampling Episode
Bed Temperature (F)+	1200-1300 (1400 max.)	1227-1287
Freeboard Temperature (F)+	1250-1350 (1450 max.)	1253-1287
API Separator Sludge Feed Rate (gpm)	0-24	22.3-22.4
Undewatered DAF Float Mixture Feed Rate (gpm)	30-90	50
Constriction Plate Pressure Differential (In. H_2O)+	15-20	9.3-18.7
Fluidized Bed Pressure Differential (In. H_2O)+	60-100	91.2-104.0
O_2 (% Volume)	NA	9.5-16.8
CO (ppm-Volume)	35-800	45-140
CO_2 (% Volume)	NA	2.2-8.6

+Strip charts for this parameter are included in Appendix E.

NA = Not analyzed.

Table 3-4

TREATMENT PERFORMANCE DATA COLLECTED BY EPA FOR K048 AND K051
PLANT A-FLUIDIZED BED INCINERATION

Sample Set #4

Detected BDAT Organic Constituents	Untreated Waste K048* Concentration mg/kg (ppm)	Untreated Waste K051 Concentration mg/kg (ppm)	Treated Waste Fluidized Bed Incinerator Ash Concentration mg/kg (ppm)
VOLATILES			
4. Benzene	<14	<14	<2
21. Dichlorodifluoromethane	<14	<14	<2
226. Ehtyl benzene	<14	50	<2
38. Methylene chloride	<70	<70	<10
43. Toluene	28	33	<2
47. Trichloroethene	<14	<14	<2
215-217. Xylene (total)	79	72	5.8
SEMIVOLATILES			
52. Acenaphthene	<20	<20	<0.2
59. Benz(a)anthracene	<20	23	<0.2
70. Bis(2-ethylhexyl)phthalate	59	26	<1.0
80. Chrysene	<20	48	<0.2
98. Di-n-butyl phthalate	190	170	<1.0
109. Fluorene	31	35	<0.2
121. Naphthalene	93	150	<0.2
141. Phenanthrene	77	120	<0.2
145. Pyrene	31	74	<0.2

*K048 is a dewatered mixture of DAF float (K048) and waste biosludge.

Table 3-4 (Continued)

TREATMENT PERFORMANCE DATA COLLECTED BY EPA FOR K048 AND K051
PLANT A - FLUIDIZED BED INCINERATION

Sample Set #4 (Continued)

Detected BDAT Metal and Inorganic Constituents	Untreated Waste		Treated Waste	
			Fluidized Bed Incinerator Ash	
	K048* Concentration mg/kg (ppm)	K051 Concentration mg/kg (ppm)	Concentration mg/kg (ppm)	TCLP mg/L (ppm)
METALS				
154. Antimony	<6	15	17	0.06
155. Arsenic	4.9	7.5	14	0.015
156. Barium	61	92	180	0.25
157. Beryllium	<0.1	<0.1	0.7	<0.001
158. Cadmium	<0.3	1.4	2	<0.003
221. Chromium (hexavalent)	<0.05	<0.05	24	NA
159. Chromium (total)	840	960	1600	2.3
160. Copper	49	140	240	0.02
161. Lead	340	690	1200	<0.05
162. Mercury	0.13	0.07	<0.02	0.0003
163. Nickel	14	37	80	<0.02
164. Selenium	8.7	0.9	<0.3	0.11
165. Silver	<0.9	<0.9	<4	<0.009
167. Vanadium	390	320	790	2.7
168. Zinc	400	650	1100	0.086
INORGANICS				
169. Total cyanide	1	1.4	0.5	
171. Sulfide	2500	4800	<50	

NA = Not Analyzed

* K048 is a dewatered mixture of DAF float (K048) and waste biosludge.

Table 3-4 (Continued)

TREATMENT PERFORMANCE DATA COLLECTED BY EPA FOR K048 AND K051
PLANT A - FLUIDIZED BED INCINERATION

Sample Set #4 (Continued)

Design and Operating Parameters	Nominal Operating Range	Operating Range During Sampling Episode
Bed Temperature (F)+	1200-1300 (1400 max.)	1200-1260
Freeboard Temperature (F)+	1250-1350 (1450 max.)	1253-1273
API Separator Sludge Feed Rate (gpm)	0-24	22.3-22.4
Undewatered DAF Float Mixture Feed Rate (gpm)	30-90	61
Constriction Plate Pressure Differential (In. H_2O)+	15-20	8.7-18.3
Fluidized Bed Pressure Differential (In. H_2O)+	60-100	91.2-105.6
O_2 (% Volume)	NA	10.5-17.0
CO (ppm-Volume)	35-800	40-340
CO_2 (% Volume)	NA	2.8-7.9

+Strip charts for this parameter are included in Appendix E.

NA = Not applicable.

Table 3-5

TREATMENT PERFORMANCE DATA COLLECTED BY EPA FOR K048 AND K051
PLANT A-FLUIDIZED BED INCINERATION

Sample Set #5

Detected BDAT Organic Constituents	Untreated Waste K048* Concentration mg/kg (ppm)	Untreated Waste K051 Concentration mg/kg (ppm)	Treated Waste Fluidized Bed Incinerator Ash Concentration mg/kg (ppm)
VOLATILES			
4. Benzene	<14	<14	<2
21. Dichlorodifluoromethane	<14	<14	<2
226. Ethyl benzene	41	49	<2
38. Methylene chloride	<70	<70	<10
43. Toluene	41	34	<2
47. Trichloroethene	<14	<14	<2
215-217. Xylene (total)	110	71	<2
SEMIVOLATILES			
52. Acenaphthene	<20	<20	<0.2
59. Benz(a)anthracene	<20	24	<0.2
70. Bis(2-ethylhexyl)phthalate	21	28	<1.0
80. Chrysene	22	47	<0.2
98. Di-n-butyl phthalate	74	230	<1.0
109. Fluorene	32	37	<0.2
121. Naphthalene	94	160	<0.2
141. Phenanthrene	83	120	<0.2
145. Pyrene	34	74	<0.2

*K048 is a dewatered mixture of DAF float (K048) and waste biosludge.

Table 3-5 (Continued)

TREATMENT PERFORMANCE DATA COLLECTED BY EPA FOR K048 AND K051
PLANT A - FLUIDIZED BED INCINERATION

Sample Set #5 (Continued)

Detected BDAT Metal and Inorganic Constituents	Untreated Waste		Treated Waste	
			Fluidized Bed Incinerator Ash	
	K048* Concentration mg/kg (ppm)	K051 Concentration mg/kg (ppm)	Concentration mg/kg (ppm)	TCLP mg/L (ppm)
METALS				
154. Antimony	<6	9	16	0.06
155. Arsenic	5.5	8.3	13	0.022
156. Barium	59	100	180	0.20
157. Beryllium	<0.1	<0.1	0.6	<0.001
158. Cadmium	<0.3	1.7	2	<0.003
221. Chromium (hexavalent)	<0.05	<0.05	40	NA
159. Chromium (total)	810	1100	1600	2.4
160. Copper	47	170	240	0.02
161. Lead	330	700	1300	<0.05
162. Mercury	0.16	0.31	<0.02	0.0003
163. Nickel	14	37	70	<0.02
164. Selenium	11	0.5	<0.3	0.12
165. Silver	<0.9	1.4	<4	<0.009
167. Vanadium	370	350	830	2.9
168. Zinc	380	680	1100	0.079
INORGANICS				
169. Total cyanide	<0.1	<0.1	<0.1	
171. Sulfide	2800	4000	<50	

NA = Not Analyzed

* K048 is a dewatered mixture of DAF float (K048) and waste biosludge.

Table 3-5 (Continued)

TREATMENT PERFORMANCE DATA COLLECTED BY EPA FOR K048 AND K051
PLANT A - FLUIDIZED BED INCINERATION

Sample Set #5 (Continued)

Design and Operating Parameters	Nominal Operating Range	Operating Range During Sampling Episode
Bed Temperature (F)+	1200-1300 (1400 max.)	1220-1253
Freeboard Temperature (F)+	1250-1350 (1450 max.)	1253-1267
API Separator Sludge Feed Rate (gpm)	0-24	22.3
Undewatered DAF Float Mixture Feed Rate (gpm)	30-90	53
Constriction Plate Pressure Differential (In. H_2O)+	15-20	8.7-18.7
Fluidized Bed Pressure Differential (In. H_2O)+	60-100	92.8-105.6
O_2 (% Volume)	NA	10.8-17.3
CO (ppm-Volume)	35-800	30-910
CO_2 (% Volume)	NA	2.8-7.5

+Strip charts for this parameter are included in Appendix E.

NA = Not applicable.

Table 3-6

TREATMENT PERFORMANCE DATA COLLECTED BY EPA FOR K048 AND K051
PLANT A-FLUIDIZED BED INCINERATION

Sample Set #6

Detected BDAT Organic Constituents	Untreated Waste K048* Concentration mg/kg (ppm)	Untreated Waste K051 Concentration mg/kg (ppm)	Treated Waste Fluidized Bed Incinerator Ash Concentration mg/kg (ppm)
VOLATILES			
4. Benzene	<14	<14	<2
21. Dichlorodifluoromethane	<14	<14	<2
226. Ethyl benzene	49	52	<2
38. Methylene chloride	<70	<70	<10
43. Toluene	34	71	<2
47. Trichloroethene	<14	<14	<2
215-217. Xylene (total)	<14	83	<2
SEMIVOLATILES			
52. Acenaphthene	<20	<20	<0.2
59. Benz(a)anthracene	<20	25	<0.2
70. Bis(2-ethylhexyl)phthalate	<20	<20	<1.0
80. Chrysene	<20	51	<0.2
98. Di-n-butyl phthalate	130	43	<1.0
109. Fluorene	31	36	<0.2
121. Naphthalene	98	170	<0.2
141. Phenanthrene	86	120	<0.2
145. Pyrene	31	67	<0.2

*K048 is a dewatered mixture of DAF float (K048) and waste biosludge.

Table 3-6 (Continued)

TREATMENT PERFORMANCE DATA COLLECTED BY EPA FOR K048 AND K051
PLANT A - FLUIDIZED BED INCINERATION

Sample Set #6 (Continued)

Detected BDAT Metal and Inorganic Constituents	Untreated Waste		Treated Waste	
			Fluidized Bed Incinerator Ash	
	K048* Concentration mg/kg (ppm)	K051 Concentration mg/kg (ppm)	Concentration mg/kg (ppm)	TCLP mg/L (ppm)
METALS				
154. Antimony	<6	<6	15	0.07
155. Arsenic	5.4	5.4	16	0.025
156. Barium	61	72	180	0.21
157. Beryllium	<0.1	<0.1	<0.1	<0.001
158. Cadmium	0.4	1.2	3.1	<0.003
221. Chromium (hexavalent)	<0.05	<0.05	30	NA
159. Chromium (total)	830	840	1700	2.1
160. Copper	48	130	250	0.02
161. Lead	350	640	1100	<0.05
162. Mercury	0.14	0.11	<0.02	<0.0002
163. Nickel	13	26	73	0.03
164. Selenium	11	0.9	<0.3	0.12
165. Silver	<0.9	<0.9	<4	<0.009
167. Vanadium	380	280	910	3.6
168. Zinc	390	570	1200	0.11
INORGANICS				
169. Total cyanide	0.9	0.6	0.5	
171. Sulfide	360	3400	<50	

NA = Not Analyzed

* K048 is a dewatered mixture of DAF float (K048) and waste biosludge.

Table 3-6 (Continued)

TREATMENT PERFORMANCE DATA COLLECTED BY EPA FOR K048 AND K051
PLANT A - FLUIDIZED BED INCINERATION

Sample Set #6 (Continued)

Design and Operating Parameters	Nominal Operating Range	Operating Range During Sampling Episode
Bed Temperature (F)+	1200-1300 (1400 max.)	1220-1240
Freeboard Temperature (F)+	1250-1350 (1450 max.)	1253-1267
API Separator Sludge Feed Rate (gpm)	0-24	22.3
Undewatered DAF Float Mixture Feed Rate (gpm)	30-90	61
Constriction Plate Pressure Differential (In. H_2O)+	15-20	10.0-18.0
Fluidized Bed Pressure Differential (In. H_2O)+	60-100	92.8-105.6
O_2 (% Volume)	NA	10.8-16.0
CO (ppm-Volume)	35-800	50-770
CO_2 (% Volume)	NA	5.7-7.7

+Strip charts for this parameter are included in Appendix E.

NA = Not applicable.

Table 3-7

TREATMENT PERFORMANCE DATA SUBMITTED BY INDUSTRY
FOR PETROLEUM REFINING WASTES
PLANT K (REPORT 2) - SOLVENT EXTRACTION

Detected BDAT Organic Constituents+	Untreated Waste* TCLP mg/L (ppm)	Treated Waste Concentration mg/L (ppm)	Treated Waste TCLP mg/L (ppm)
VOLATILES			
4. Benzene	16	NA	<0.025
	51		<0.025
	42		<0.025
	9.7		<0.025
	16		<0.025
	20		<0.025
			<0.025
			<0.025
			<0.025
226. Ethyl benzene	5.7	<0.25	<0.025
	12	<0.25	<0.025
	28	<0.25	<0.025
	7.5	<0.25	<0.025
	6.8	<0.25	<0.025
	8.5	<0.25	<0.025
		<0.25	<0.025
		<0.25	<0.025
		<0.25	<0.025
43. Toluene	22	NA	<0.025
	33		<0.025
	54		<0.025
	17		<0.025
	24		<0.025
	30		<0.025
			<0.025
			<0.025
			<0.025

NA = Not Analyzed.

+Analyses were not performed for all BDAT list organic and metal constituents.

*The untreated waste consists of petroleum refinery wastes (the specific waste codes were not reported).

Table 3-7 (Continued)

TREATMENT PERFORMANCE DATA SUBMITTED BY INDUSTRY
FOR PETROLEUM REFINING WASTES
PLANT K (REPORT 2) - SOLVENT EXTRACTION

Detected BDAT Organic Constituents+	Untreated Waste* TCLP mg/L (ppm)	Treated Waste Concentration mg/L (ppm)	Treated Waste TCLP mg/L (ppm)
SEMIVOLATILES			
215-217. Xylene (total)	16.3	<0.5	<0.05
	48	1.9	0.071
	62	1.3	<0.05
	21.9	7.2	0.153
	30	3	0.089
	36	4.1	0.132
		2.9	0.161
		2.5	0.118
		4.2	0.185
		4.2	0.185
57. Anthracene	<0.013	NA	<0.01
	1.2		<0.01
	0.45		<0.01
	5.2		<0.01
	<0.4		<0.01
	<1.3		<0.01
			<0.01
			<0.01
			<0.01
59. Benzo(a)anthracene	0.014	<0.7	<0.01
	0.78	<0.7	<0.01
	0.36	<0.7	<0.01
	4.6	<0.7	<0.01
	<0.4	<0.7	<0.01
	2.2	<0.7	<0.01
		<0.7	<0.01
		0.8	<0.01
		<0.7	<0.01

NA = Not Analyzed.

+Analyses were not performed for all BDAT list organic and metal constituents.

*The untreated waste consists of petroleum refinery wastes (the specific waste codes were not reported).

Table 3-7 (Continued)

TREATMENT PERFORMANCE DATA SUBMITTED BY INDUSTRY
FOR PETROLEUM REFINING WASTES
PLANT K (REPORT 2) - SOLVENT EXTRACTION

Detected BDAT Organic Constituents	Untreated Waste TCLP mg/L (ppm)	Treated Waste Concentration mg/L (ppm)	Treated Waste TCLP mg/L (ppm)
SEMIVOLATILES (Continued)			
62. Benzo(a)pyrene	<0.013	<0.6	<0.01
	0.51	<0.6	<0.01
	0.21	0.6	<0.01
	3.5	<0.6	<0.01
	<0.04	<0.6	<0.01
	1.5	<0.6	<0.01
		<0.6	<0.01
		<0.6	<0.01
		<0.6	<0.01
		<0.6	<0.01
70. Bis(2-ethylhexyl)phthalate	<0.013	1.7	<0.01
	<0.2	<1.6	<0.01
	<0.2	<1.6	<0.01
	<3	<1.6	<0.01
	<0.04	<1.6	<0.01
	<1.3	1.8	0.047
		<1.6	<0.01
		<1.6	<0.01
		<1.6	<0.01
80. Chrysene	0.028	NA	<0.01
	1.3		<0.01
	0.5		<0.01
	6.3		<0.01
	<1.2		<0.01
	3		<0.01
			<0.01
			<0.01
			<0.01

NA = Not Analyzed.

+Analyses were not performed for all BDAT list organic and metal constituents.

*The untreated waste consists of petroleum refinery wastes (the specific waste codes were not reported).

Table 3-7 (Continued)

TREATMENT PERFORMANCE DATA SUBMITTED BY INDUSTRY
FOR PETROLEUM REFINING WASTES
PLANT K (REPORT 2) - SOLVENT EXTRACTION

Detected BDAT Organic Constituents+	Untreated Waste* TCLP mg/L (ppm)	Treated Waste Concentration mg/L (ppm)	Treated Waste TCLP mg/L (ppm)
SEMIVOLATILES (Continued)			
96. 2,4-Dimethylphenol	0.061	NA	<0.01
	<0.3		<0.01
	<0.2		<0.01
	<3.0		<0.01
	<0.4		<0.01
	<1.3		<0.01
			<0.01
			<0.01
			<0.01
121. Naphthalene	0.47	7.8	0.021
	4.2	18	0.084
	2.5	6.6	0.023
	28	8.5	0.022
	3.2	8	0.046
	7.3	16	0.11
		14	0.1
		18	0.058
		5.3	0.05
141. Phenathrene	0.25	NA	<0.01
	4.7		<0.01
	2.5		<0.01
	4.6		<0.01
	8.9		<0.01
	24		<0.01
			<0.01
			<0.01
			<0.01

NA = Not Analyzed.

+Analyses were not performed for all BDAT list organic and metal constituents.

*The untreated waste consists of petroleum refinery wastes (the specific waste codes were not reported).

Table 3-7 (Continued)

TREATMENT PERFORMANCE DATA SUBMITTED BY INDUSTRY
FOR PETROLEUM REFINING WASTES
PLANT K (REPORT 2) - SOLVENT EXTRACTION

Detected BDAT Organic Constituents+	Untreated Waste* TCLP mg/L (ppm)	Treated Waste Concentration mg/L (ppm)	Treated Waste TCLP mg/L (ppm)
SEMIVOLATILES (Continued)			
142. Phenol	0.017	NA	<0.01
	<0.3		<0.01
	<0.2		<0.01
	<3.0		<0.01
	<0.4		<0.01
	<1.3		<0.01
			<0.01
			<0.01
			<0.01
145. Pyrene	0.051	NA	<0.01
	1.5		<0.01
	0.65		<0.01
	9.4		<0.01
	1.7		<0.01
	4.1		<0.01
			<0.01
			<0.01
			<0.01

NA = Not Analyzed.

+Analyses were not performed for all BDAT list organic and metal constituents.

*The untreated waste consists of petroleum refinery wastes (the specific waste codes were not reported).

Table 3-7 (Continued)

TREATMENT PERFORMANCE DATA SUBMITTED BY INDUSTRY
FOR PETROLEUM REFINING WASTES
PLANT K (REPORT 2) - SOLVENT EXTRACTION

Detected BDAT Metal Constituents+	Untreated Waste* TCLP mg/L (ppm)	Treated Waste Concentration mg/L (ppm)	Treated Waste TCLP mg/L (ppm)
METALS			
154. Antimony	NA	15	NA
		22	
		19	
		27	
		22	
		11	
		10	
		10	
		18	
155. Arsenic	<0.03	9.8	0.008
	0.01	11	0.028
	<0.03	10	0.022
	BDL	13	0.026
	<0.8	8.8	0.018
	<0.03	12	0.024
		12	0.024
		10	<0.056
		14	<0.006
156. Barium	1.4	810	<1
	1.8	800	<1
	1.4	990	<1
	5.3	1,300	<1
	2.3	940	1
	3.4	880	<1
		800	<1
		760	<1
		3,200	<1

NA = Not Analyzed

+Analyses were not performed for all BDAT list organic and metal constituents.

*The untreated waste consists of petroleum refinery wastes (the specific waste codes were not reported).

BDL = Below Detection Limit.

Table 3-7 (Continued)

TREATMENT PERFORMANCE DATA SUBMITTED BY INDUSTRY
FOR PETROLEUM REFINING WASTES
PLANT K (REPORT 2) - SOLVENT EXTRACTION

Detected BDAT Metal Constituents+	Untreated Waste* TCLP mg/L (ppm)	Treated Waste Concentration mg/L (ppm)	Treated Waste TCLP mg/L (ppm)
METALS (Continued)			
157. Beryllium	NA	0.2	NA
		0.4	
		0.3	
		0.3	
		0.4	
		0.3	
		0.3	
		0.3	
		0.3	
158. Cadmium	NA	1.3	NA
		1.4	
		<0.8	
		1.0	
		1.6	
		1.1	
		1.9	
		1.2	
		1.9	
159. Chromium (total)	0.12	590	<0.05
	2.4	610	<0.05
	1.7	650	<0.05
	14	820	<0.05
	5.9	620	<0.05
	10	650	<0.05
		570	<0.05
		550	0.11
		820	<0.05

NA = Not Analyzed

+Analyses were not performed for all BDAT list organic and metal constituents.

*The untreated waste consists of petroleum refinery wastes (the specific waste codes were not reported).

BDL = Below detection limit; detection limit was not reported.

Table 3-7 (Continued)

TREATMENT PERFORMANCE DATA SUBMITTED BY INDUSTRY
FOR PETROLEUM REFINING WASTES
PLANT K (REPORT 2) - SOLVENT EXTRACTION

Detected BDAT Metal Constituents+	Untreated Waste* TCLP mg/L (ppm)	Treated Waste Concentration mg/L (ppm)	Treated Waste TCLP mg/L (ppm)
METALS (Continued)			
161. Lead	NA	31	NA
		42	
		27	
		36	
		27	
		37	
		28	
		39	
162. Mercury	NA	1.5	NA
		2.2	
		1.8	
		2.1	
		2.0	
		2.5	
		2.1	
		1.0	
		2.0	
163. Nickel	<0.08	58	0.8
	0.16	51	<0.2
	0.12	41	<0.2
	0.27	45	<0.2
	0.13	56	0.2
	<0.13	50	<0.2
		43	<0.2
		42	0.7
		53	0.6

NA = Not Analyzed

+Analyses were not performed for all BDAT list organic and metal constituents.

*The untreated waste consists of petroleum refinery wastes (the specific waste codes were not reported).

Table 3-7 (Continued)

TREATMENT PERFORMANCE DATA SUBMITTED BY INDUSTRY
FOR PETROLEUM REFINING WASTES
PLANT K (REPORT 2) - SOLVENT EXTRACTION

Detected BDAT Metal Constituents+	Untreated Waste* TCLP mg/L (ppm)	Treated Waste Concentration mg/L (ppm)	Treated Waste TCLP mg/L (ppm)
METALS (Continued)			
164. Selenium	NA	<0.4	NA
		<0.4	
		<0.4	
		<0.4	
		<0.4	
		2.7	
		3.1	
		2.3	
		1.6	
167. Vanadium	NA	30	NA
		43	
		34	
		36	
		40	
		34	
		34	
		30	
		36	

Design and Operating Parameters

No data were submitted.

NA = Not Analyzed

+Analyses were not performed for all BDAT list organic and metal constituents.

*The untreated waste consists of petroleum refinery wastes (the specific waste codes were not reported).

Table 3-8

TREATMENT PERFORMANCE DATA COLLECTED BY EPA FOR K048 AND K051
PLANT I - STABILIZATION OF INCINERATOR ASH

Detected BDAT Metal Constituents	Untreated Waste TCLP Extracts of K048 and K051 Incinerator Ash	Treated Waste: TCLP Extracts of Stabilized Fluidized Bed Incinerator Ash								
		Cement Binder			Kiln Dust Binder			Lime and Fly Ash Binder		
		Run 1 mg/L (ppm)	Run 2 mg/L (ppm)	Run 3 mg/L (ppm)	Run 1 mg/L (ppm)	Run 2 mg/L (ppm)	Run 3 mg/L (ppm)	Run 1 mg/L (ppm)	Run 2 mg/L (ppm)	Run 3 mg/L (ppm)
154. Antimony	0.06-0.09	<0.163	<0.163	<0.163	<0.163	0.178	<0.163	<0.163	<0.163	<0.163
155. Arsenic	0.008-0.025	<0.004	<0.004	<0.004	0.005	0.005	0.005	<0.004	<0.004	0.006
156. Barium	0.17-0.25	0.277	0.28	0.278	0.203	0.2	0.204	0.558	0.524	0.599
157. Beryllium	0.001	<0.001	<0.001	<0.001	<0.001	<0.001	<0.001	<0.001	<0.001	<0.001
158. Cadmium	<0.003	<0.003	<0.003	<0.003	<0.003	<0.003	<0.003	<0.003	<0.003	<0.003
159. Chromium (total)	2.1-2.6	2.11	2.12	2.16	1.78	1.92	1.87	1.13	1.21	1.08
221. Chromium (hexavalent)	NA	0.415	0.326	2.47	0.38	0.395	2.13	0.331	0.259	0.071
160. Copper	0.02	<0.003	<0.003	0.015	<0.003	<0.003	<0.003	<0.003	<0.003	0.006
161. Lead	<0.05	<0.006	<0.006	0.011	0.02	0.009	<0.006	<0.006	<0.006	<0.006
162. Mercury	0.0002-0.0003	NA	NA	NA	NA	NA	NA	NA	NA	NA
163. Nickel	0.02-0.03	<0.018	<0.018	<0.018	<0.018	<0.018	<0.018	<0.018	<0.018	<0.018
164. Selenium	0.033-0.12	0.025	0.022	0.024	0.044	0.043	0.04	0.013	0.016	0.017
165. Silver	<0.009	<0.006	<0.006	<0.006	<0.006	<0.006	<0.006	<0.006	<0.006	<0.006
166. Thallium	NA	<0.001	0.009	<0.001	<0.001	<0.001	<0.001	<0.001	<0.001	<0.001
167. Vanadium	2.5-3.6	1.4	1.21	1.29	1.53	1.64	1.56	0.148	0.149	0.156
168. Zinc	0.055-0.11	0.058	0.047	0.086	0.048	0.042	0.031	0.02	0.022	0.052

NA = Not analyzed.

Table 3-8 (Continued)

TREATMENT PERFORMANCE DATA COLLECTED BY EPA FOR K048 AND K051
PLANT I - STABILIZATION OF INCINERATOR ASH

Design and Operating Parameters	Stabilization Process								
	Cement			Kiln Dust			Lime and Fly Ash		
	Run 1	Run 2	Run 3	Run 1	Run 2	Run 3	Run 1	Run 2	Run 3
Binder to Ash Ratio	0.2	0.2	0.2	0.2	0.2	0.2	NP	NP	NP
Lime to Ash Ratio	NP	NP	NP	NP	NP	NP	0.2	0.2	0.2
Fly Ash to Ash Ratio	NP	NP	NP	NP	NP	NP	0.2	0.2	0.2
Water to Ash Ratio	0.5	0.5	0.5	0.5	0.5	0.5	0.5	0.5	0.5
Ambient Temperature (^{o}C)	23	23	23	19	19.5	20	19	19	19
Mixture pH	11.6	11.5	11.5	12.1	12.1	12.1	12.0	12.1	12.1
Cure Time (Days)	28	28	28	28	28	28	28	28	28
Unconfined Compressive Strength (lb/in^2)	943.5	921.6	1270	222.8	267.7	241.0	565.8	512.6	578.8

NP = Not applicable.

Table 3-9

TREATMENT PERFORMANCE DATA SUBMITTED BY INDUSTRY FOR K049
PLANT J - MICROENCAPSULATION/POZZOLANIC STABILIZATION

Detected BDAT Constituent	Untreated Waste* TCLP mg/L (ppm)	Treated Waste TCLP mg/L (ppm)
VOLATILES		
4. Benzene	26	0.16
226. Ethyl benzene	27	0.13
43. Toluene	51	0.66
215-217. Xylene (total)	101	0.63
SEMIVOLATILES		
81. ortho-Cresol	0.05	0.07
96. 2,4-Dimethylphenol	0.06	0.07
121. Naphthalene	0.27	0.22
141. Phenanthrene	0.1	0.01
142. Phenol	0.02	0.94
METALS		
155. Arsenic	BDL	0.01
156. Barium	1.4	1.4

Design and Operating Parameters

No data were submitted.

*The untreated waste is slop oil emulsion solids (K049).

+Analyses were not performed for all BDAT list organic and metal constituents.

BDL - Below detection limit; detection limit not reported.

Table 3-10

TREATMENT PERFORMANCE DATA SUBMITTED BY INDUSTRY FOR K051
PLANT J - MICROENCAPULATION/POZZOLANIC STABILIZATION

Detected BDAT Constituents+	Untreated Waste* TCLP mg/L (ppm)	Treated Waste TCLP mg/L (ppm)
VOLATILES		
4. Benzene	22	0.04
226. Ethyl benzene	8	0.11
43. Toluene	28	0.24
215-217. Xylene (total)	33	0.57
SEMIVOLATILES		
57. Anthracene	3.6	<0.005
59. Benzo(a)anthracene	0.49	<0.005
62. Benzo(a)pyrene	0.38	<0.005
80. Chrysene	0.99	<0.005
81. ortho-Cresol	0.25	0.01
96. 2,4-Dimethylphenol	0.25	0.01
121. Naphthalene	10.2	0.16
141. Phenanthrene	<0.06	0.01
142. Phenol	2.4	0.03
145. Pyrene	1.2	<0.005
METALS		
155. Arsenic	0.01	<0.002
156. Barium	1.3	1.9
159. Chromium (total)	0.89	<0.025

Design and Operating Parameters

No data were submitted.

*The untreated waste is API separator sludge (K051).

+Analyses were not performed for all BDAT organic and metal constituents.

Table 3-11

TREATMENT PERFORMANCE DATA SUBMITTED BY INDUSTRY FOR PETROLEUM REFINERY WASTES
PLANT J - MICROENCAPSULATION/POZZOLANIC STABILIZATION

Detected BDAT Constituents+	Untreated Waste* TCLP mg/L (ppm)	Treated Waste TCLP mg/L (ppm)
VOLATILES		
4. Benzene	1.3	<0.0005
43. Toluene	2.2	0.01
215-217. Xylene (total)	1.8	0.14
SEMIVOLATILES		
121. Naphthalene	0.1	BDL
141. Phenanthrene	<0.01	0.01
METALS		
156. Barium	1.0	2.2

Design and Operating Parameters

No data were submitted.

*The untreated waste is the filter cake from the belt filter press at plant C generated from treatment of petroleum refinery wastes (the specific waste codes were not reported).

+Analyses were not performed for all BDAT organic and metal constituents.

BDL = Below detection limit; detection limit not reported.

Table 3-12

TREATMENT PERFORMANCE DATA SUBMITTED BY INDUSTRY FOR K051 AND K052
PLANT J - MICROENCAPSULATION/POZZOLANIC STABILIZATION

Detected BDAT Constituents+	Untreated Waste* TCLP mg/L (ppm)	Treated Waste TCLP mg/L (ppm)
VOLATILES		
4. Benzene	0.8	0.01
226. Ethyl benzene	0.22	NA
43. Toluene	2.2	0.09
215-217. Xylene (total)	1.42	0.47
SEMIVOLATILES		
81. ortho-Cresol	0.2	NA
96. 2,4-Dimethylphenol	0.01	NA
121. Naphthalene	0.16	NA
141. Phenanthrene	0.00**	0.22
142. Phenol	0.1	BDL
METALS		
155. Arsenic	0.00**	BDL
156. Barium	0.57	2.0

Design and Operating Parameters

No data were submitted.

*The untreated waste is the filter cake from the plate filter press at plant E generated from treatment of a mixture of K051 and K052.

**Value was reported as 0.00.

+Analyses were not performed for all BDAT organic and metal constituents.

BDL = Below detection limit; detection limit was not reported.

NA = Not Analyzed

Table 3-13

TREATMENT PERFORMANCE DATA SUBMITTED BY INDUSTRY FOR PETROLEUM REFINERY WASTES
PLANT J - SODIUM SILICATE/POZZOLANIC STABILIZATION

Detected BDAT Constituents+	Untreated Waste* TCLP mg/L (ppm)	Treated Waste TCLP mg/L (ppm)
VOLATILES		
4. Benzene	1.3	0.48
43. Toluene	2.2	1.8
215-217. Xylene (total)	1.8	1.2
SEMIVOLATILES		
81. ortho-Cresol	0.02	---
96. 2,4-Dimethylphenol	0.04	---
121. Naphthalene	0.1	0.18
METALS		
155. Arsenic	<0.1	0.01
156. Barium	1.0	BDL

Design and Operating Parameters

No data were submitted.

*The untreated waste is the belt filter cake from plant C generated from treatment of unknown petroleum refinery wastes (the specific waste codes were not reported).

+Analyses were not performed for all BDAT list organic and metal constituents.

Table 3-14

TREATMENT PERFORMANCE DATA SUBMITTED BY INDUSTRY FOR K051 AND K052
PLANT J - SODIUM SILICATE/POZZOLANIC STABILIZATION

Detected BDAT Constituents+	Untreated Waste* TCLP mg/L (ppm)	Treated Waste TCLP mg/L (ppm)
VOLATILES		
4. Benzene	0.80	0.79
226. Ethyl benzene	0.22	NA
43. Toluene	2.2	3.1
215-217. Xylene (total)	1.42	2.1
SEMIVOLATILES		
81. ortho-Cresol	0.02	BDL++
96. 2,4-Dimethylphenol	0.01	BDL++
121. Naphthalene	0.16	0.17
141. Phenanthrene	0.00**	BDL
142. Phenol	0.1	BDL++
METALS		
155. Arsenic	0.00**	0.00**
156. Barium	0.57	BDL

Design and Operating Parameters

No data were submitted.

*The untreated waste is the plate filter cake from plant E generated from treatment of a mixture of K051 and K052.

**Value was reported as 0.00.

+Analyses were not performed for all BDAT list organic and metal constituents.

++The sum of phenols, cresols, and 2,4-dimethylphenol was below the detection limit.

BDL = Below detection limit; detection limit not reported.

NA = Not analyzed.

Table 3-15

TREATMENT PERFORMANCE DATA SUBMITTED BY INDUSTRY FOR PETROLEUM REFINERY WASTES
PLANT J - CEMENT, FLY ASH, AND LIME STABILIZATION

Detected BDAT Constituents+	Untreated Waste* TCLP mg/L (ppm)	Treated Waste TCLP mg/L (ppm)
VOLATILES		
4. Benzene	1.5	0.01
43. Toluene	2.5	0.13
215-217. Xylene	1.8	0.39
SEMIVOLATILES		
121. Naphthalene	0.1	0.00**
141. Phenanthrene	BDL	0.01
METALS		
155. Arsenic	BDL	0.02
156. Barium	1.0	1.2

Design and Operating Parmeters

No data were submitted.

*The untreated waste is the belt filter cake from plant C generated from treatment of petroleum refinery wastes (the specific waste codes were not reported).

**Value was reported as 0.00.

+Analyses were not performed for all BDAT list organic and metal constituents.

BDL = Below detection limit; detection limit not reported.

Table 3-16

TREATMENT PERFORMANCE DATA SUBMITTED BY INDUSTRY FOR K051 AND K052
PLANT J - CEMENT, FLY ASH, AND LIME STABILIZATION

Detected BDAT Constituents+	Untreated Waste* TCLP mg/L (ppm)	Treated Waste TCLP mg/L (ppm)
VOLATILES		
4. Benzene	0.8	0.03
43. Toluene	2.2	0.26
215-217. Xylene (total)	1.4	0.59
SEMIVOLATILES		
121. Naphthalene	0.16	0.1
141. Phenanthrene	0.004	0.01
142. Phenols++	0.16	0.07
METALS		
155. Arsenic	0.00**	0.01
156. Barium	0.57	1.5

Design and Operating Parameters

No data were submitted.

*The untreated waste is the plate filter cake from plant E generated from treatment of a mixture of K051 and K052.

**Value was reported as 0.00.

+Analyses were not performed for all BDAT list organic and metal constituents.

++The phenol analysis is the sum of phenols, cresols, and 2,4-dimethylphenol.

Table 3-17

TREATMENT PERFORMANCE DATA SUBMITTED BY INDUSTRY FOR PETROLEUM REFINERY WASTES
PLANT J - SODIUM SILICATE/POZZOLANIC STABILIZATION

Detected BDAT Constituents+	Untreated Waste* TCLP mg/L (ppm)	Treated Waste TCLP mg/L (ppm)
VOLATILES		
4. Benzene	<0.05	0.01
226. Ethyl benzene	<0.05	NA
43. Toluene	<0.05	0.01
215-217. Xylene (total)	<0.05	0.02
SEMIVOLATILES		
81. ortho-Cresol	0.89	----
96. 2,4-Dimethylphenol	0.06	----
141. Phenanthrene	0.13	BDL
142. Phenol	0.05	BDL
METALS		
155. Arsenic	<0.04	0.02
156. Barium	0.57	BDL
158. Cadmium	BDL	0.05
159. Chromium (total)	0.04	0.02

Design and Operating Parameters

No data were submitted.

*The untreated waste is the thermally dried (550°F) belt filter cake from plant H generated from treatment of petroleum refinery wastes (the specific waste codes were not reported) at plant C.

+Analyses were not performed for all BDAT list organic and metal constituents.

BDL = Below detection limit; detection limit not reported.

NA = Not analyzed.

Table 3-18

TREATMENT PERFORMANCE DATA SUBMITTED BY INDUSTRY FOR K051 AND K052
PLANT J - SODIUM SILICATE/POZZOLANIC STABILIZATION

Detected BDAT Constituents+	Untreated Waste* TCLP mg/L (ppm)	Treated Waste TCLP mg/L (ppm)
VOLATILES		
4. Benzene	<0.025	0.00**
43. Toluene	0.03	0.01
215-217. Xylene (total)	<0.05	0.02
SEMIVOLATILES		
70. Bis(2-ethylhexyl)phthalate	0.012	NA
81. ortho-Cresol	0.02	NA
121. Naphthalene	0.01	BDL
142. Phenol	0.08	NA
METALS		
156. Barium	1.3	0.5
158. Cadmium	0.02	BDL

Design and Operating Parameters

No data were submitted.

*The untreated waste is the thermally dried plate filter cake from plant H generated from treatment of a mixture of K051 and K052 at plant E.

**Value was reported as 0.00.

+Analyses were not performed for all BDAT organic and metal constituents.

BDL = Below detection limit; detection limit not reported.

NA = Not analyzed.

4.0 IDENTIFICATION OF BEST DEMONSTRATED AND AVAILABLE TECHNOLOGY

As discussed in the previous section of this document, (Section 3.0), the Agency identified five demonstrated treatment technologies to be considered for BDAT for the nonwastewater form of the refinery waste group (K048-K052). The five technologies are: incineration including fluidized bed and rotary kiln incineration, solvent extraction, stabilization, thermal drying, and pressure filtration. Chromium reduction followed by lime and sulfide precipitation and vacuum filtration is a demonstrated technology for treating metal bearing wastewaters such as wastewater forms of refinery wastes K048-K052.

This section presents the rationale behind the determination of fluidized bed incineration followed by lime and fly ash stabilization of the incinerator ash as the proposed BDAT for nonwastewater forms of wastes included in the refinery waste group (K048-K052). It also presents the rationale behind the determination of chromium reduction followed by lime and sulfide precipitation and vacuum filtration as the proposed BDAT for metals in wastewater forms of K048-K052.

As described in Section 1.0, the best demonstrated and available technology (BDAT) for treatment of these wastes is determined based on performance data available to the Agency. (All performance data available to the Agency are discussed in Section 3.0) Prior to being used to establish treatment standards, performance data are screened to determine whether they

represent operation of a well-designed and operated system, whether sufficient quality assurance/quality control measures were employed to ensure the accuracy of the data, and whether the appropriate measure of performance was used to assess the performance of the treatment technology. All remaining performance data are then adjusted based on recovery data in order to take into account analytical interference associated with the chemical make-up of the sample. Finally, treatment data from each technology are statistically compared (technology to technology) to determine whether any technology performs better than the others.

4.1 Review of Performance Data

Nonwastewaters

The available treatment performance data for nonwastewater forms of K048-K052, presented in Section 3.0 were reviewed and assessed to determine whether they represent operation of a well-designed and operated system, whether sufficient quality assurance/quality control measures were employed to ensure the accuracy of the data, and whether appropriate measures of performance were used to assess the performance of the treatment technology.

Data provided to the Agency on the treatment of refinery wastes using thermal drying and pressure filtration technologies do not represent the appropriate measure of performance used to assess the performance of the treatment technology and to establish treatment standards (i.e., total

constituent concentration data for organics). Since appropriate performance data were not available for these technologies, thermal drying and pressure filtration were not considered further in the determination of BDAT. Some data provided to the Agency on the treatment of refinery wastes using solvent extraction do not represent the appropriate measure of performance (total constituent concentration data for organics); these data were deleted. However, other solvent extraction data provided to the Agency do represent the appropriate measure of performance and were used in the determination of BDAT. The Agency did not delete any of the remaining technologies in the determination of BDAT because the Agency had no reason to believe that any of the treatment systems were not well-designed or operated or that insufficient quality assurance/quality control measures were employed. The treatment performance data that remained after applying the screening methods were for incineration, solvent extraction, and stabilization technologies.

Wastewaters

As discussed in Section 3.0, treatment performance data were not available for wastewater forms of refinery wastes K048-K052. However, the Agency does have treatment performance data for BDAT List organics in scrubber water residuals generated from incineration of K019. EPA believes that similar levels of performance for destruction of BDAT List organics can be achieved through incineration of K048-K052. Operating data collected during treatment testing of K019 show that the technology was properly operated;

accordingly, all of the performance data for the scrubber water residual were transferred to K048-K052.

The Agency also has treatment performance data for BDAT List metals in wastes that it believes are sufficiently similar to K048-K052 wastewater residuals such that the performance data can be transferred. The data were collected by EPA from one facility treating K062 and metal-bearing characteristic wastes using chromium reduction followed by lime and sulfide precipitation and vacuum filtration. Operating data collected during this treatment performance test indicate that the technology was properly operated; accordingly all of the data were transferred to K048-K052 for development of BDAT treatment standards.

4.2 Accuracy Correction of Performance Data

Following the review of all available treatment performance data and the deletion of performance data, as appropriate, the remaining treatment performance data for demonstrated and available technologies were adjusted to account for analytical interferences associated with the chemical make-up of the treated sample. Generally, performance data were corrected for accuracy as follows: (1) a matrix spike recovery was determined, as explained below, for each BDAT list constituent detected in the untreated or treated waste; (2) an accuracy correction factor was determined for each of the above constituents by dividing 100 by the matrix spike recovery (percent) for that constituent; and (3) treatment performance data for each BDAT List constituent

detected in the untreated or treated waste were corrected by multiplying the reported concentration of the constituent by the corresponding accuracy correction factor.

Matrix spike recoveries are developed by analyzing a sample of a treated waste for a constituent and then reanalyzing the sample after the addition of a known amount of the same constituent (i.e., spike) to the sample. The matrix spike recovery represents the total amount of constituent recovered after spiking minus the initial concentration of the constituent in the sample, and the result divided by the known amount of constituent added.

4.2.1 Nonwastewaters

Descriptions, by technology, of how treatment performance data were adjusted for each BDAT List constituent detected in the untreated or treated waste are presented below.

Fluidized Bed Incineration

Table D-4 (presented in Appendix D of this background document) presents matrix spike recoveries for BDAT List organic, metal, and inorganic constituents detected in the untreated waste or the fluidized bed incinerator ash.

For most volatiles and inorganic constituents, Table D-4 shows that the matrix spike recovery was determined from the result of one matrix spike performed for each constituent.

However, for constituents for which no matrix was performed, the matrix spike recovery was derived from the average matrix spike recovery of the appropriate group of constituents (volatile or inorganic constituents) for which recovery data were available. For example, no matrix spike was performed for dichlorodifluoromethane; the matrix spike recovery used for this constituent was the result obtained by averaging the matrix spike recoveries for all volatile constituents that had recovery data.

Duplicate matrix spikes were performed for some BDAT List semivolatile constituents. If duplicate matrix spikes were performed for a semivolatile constituent, the matrix spike recovery used for that constituent was the lower of the two values from the first matrix spike and the duplicate spike.

Where a matrix spike was not performed for a semivolatile constituent, a matrix spike recovery for that constituent was based on semivolatile constituents for which there were recovery data from the two matrix spikes. In these cases, the matrix spike recoveries for all semivolatiles from the first matrix spikes were averaged. Similarly, an average matrix spike recovery was calculated for the duplicate matrix spike recoveries. The lower of the two average matrix spike recoveries of semivolatile constituents was used for any semivolatile constituent for which no matrix spike was performed. For

example, no matrix spike was performed for di-n-butyl phthalate, a base/-neutral fraction semivolatile, in fluidized bed incinerator ash; however, the treatment performance data for this constituent were adjusted for accuracy using a matrix spike recovery of 67%. This recovery was selected after averaging the matrix spike recoveries calculated for all base/neutral fraction semivolatiles in the first matrix spike (69%) and the duplicate spike (67%). The lower average matrix spike recovery of 67% was selected to subsequently calculate the accuracy correction factor for di-n-butyl phthalate.

Where a matrix spike was not performed for a BDAT list metal in the TCLP extract of incinerator ash and matrix spike data were available for the extract of that BDAT list metal from a similar matrix (i.e., stabilized incinerator ash), the analytical data were adjusted using the average matrix spike recovery for the metal in the TCLP extracts of stabilized incinerator ash.

The accuracy correction factors for fluidized bed incinerator ash data are summarized in Table D-7. The corrected treatment concentrations for BDAT List constituents detected in the untreated waste are presented in Table 4-1.

Solvent Extraction

The quality assurance/quality control information required to adjust the data values for accuracy was not provided for plant K. Therefore, the

solvent extraction treatment performance data have not been adjusted. The treated waste values from solvent extraction treatment are presented in Table 3-7 in section 3.0.

Stabilization

(a) Plant I. Table D-5 (Appendix D) presents the matrix spike recoveries determined for TCLP extracts of stabilized incinerator ash for BDAT List metals detected in the untreated or treated waste at plant I. In the case of the kiln dust binder, two matrix spike analyses were performed. The lowest percent recovery value from the two matrix spike analyses for a constituent was used as the recovery factor for that constituent in the extract from the kiln dust stabilized ash. In cases where a matrix spike was not performed for a BDAT List metal in the stabilized ash and matrix spike data were available for the extract of that BDAT list metal from a similar matrix (i.e., ash stabilized using other binders), the analytical data were adjusted using the average matrix spike recovery for the metal in the waste stabilized with other binders. For example, a matrix spike was not performed for antimony in cement stabilized ash; therefore, the analytical data were adjusted using 74% which was the average percent recovery for antimony in kiln dust (66% and 81.5%) and lime and fly ash (75.1%) stabilized ashes.

The accuracy correction factors for the stabilization data are summarized in Table D-8. The corrected treatment concentrations for stabilized incinerator ash are presented in Table 4-2.

(b) Plant J. The quality assurance/quality control information required to adjust the data values for accuracy was not provided for plant J. Therefore, the stabilization data have not been adjusted and are the same as the treated waste values presented in Tables 3-9 through 3-18 in Section 3.0. A review of the untreated and treated data for the stabilization tests conducted at plant J did not indicate that the TCLP leachates from the treated waste were lower than those from the untreated waste. Therefore, these data do not demonstrate treatment and the data were not used to determine BDAT.

4.2.2 Wastewaters

Presented below are descriptions of how transferred treatment performance data were adjusted for each BDAT List constituent detected in the untreated or treated waste.

Organics Data From K019 Scrubber Water

The adjustment for accuracy of scrubber water data for BDAT List organics in K019 are presented in detail in Section 4.0 of "Best Demonstrated Available Technology (BDAT) Background Document for Chlorinated Organics Treatability Group (K016, K018, K019, K020, K030)."

Table 4-3 presents the corrected treatment concentrations for BDAT list organics detected in the untreated K019 or the scrubber water.

Metals Data From K062 and Metal-Bearing Characteristic Wastes

The quality assurance/quality control information required to adjust the data values for accuracy was not provided for the treatment of K062 and metal-bearing characteristic wastes in the Onsite Engineering Report for Envirite (Reference 27). Therefore, matrix spike recoveries for BDAT list metal constituents were transferred from the TCLP extract of residual slag from the Onsite Engineering Report for Horsehead (Reference 28). Table D-6 presents the matrix spike recoveries for BDAT List metal constituents that were regulated in K048-K052 wastewater. The matrix spike recovery used for each constituent was the lower of the two values from the first matrix spike and the duplicate spike.

The accuracy correction factors for BDAT list metal constituents that were regulated in K048-K052 wastewater are summarized in Table D-9. The corrected treatment concentrations for BDAT list metal constituents that were regulated in K048-K052 wastewater are presented in Table 4-4.

4.3 Statistical Comparison of Performance Data

In cases where EPA has treatment performance data from more than one technology, EPA uses the statistical method known as analysis of variance (ANOVA) to determine if one technology performs significantly better than others. In cases where a particular treatment technology achieves significantly better performance, that technology will be selected as BDAT.

Nonwastewaters

To determine BDAT for nonwastewater forms of K048 and K051, EPA performed the ANOVA test to compare three technologies: fluidized bed incineration, solvent extraction, and fluidized bed incineration followed by stabilization. The ANOVA test was performed using corrected treatment concentrations.

First, fluidized bed incineration and solvent extraction were compared by using the ANOVA test on the total composition data for the BDAT List organics. The test was only performed on total xylene and naphthalene because for both treatment technologies, most other organic constituents were not detected in the treated waste. (A comparison of detection limits between technologies would not provide an indication of which technology provides better treatment). The ANOVA test was also not performed on 1-methylnaphthalene because the constituent was not analyzed in the fluidized bed incinerator ash. The results indicate that fluidized bed incineration provides equivalent treatment for total xylene and significantly better treatment for naphthalene as compared with solvent extraction. Based on these results, EPA believes that fluidized bed incineration provides better treatment for organics than solvent extraction. The results of the ANOVA test are presented in Appendix G.

Second, fluidized bed incineration and fluidized bed incineration followed by stabilization were compared using the ANOVA test on the TCLP

extract values for BDAT List metals. All three binder stabilization systems (cement, kiln dust, and lime and fly ash) were compared. The ANOVA test was not performed on beryllium, cadmium, lead, and silver because these metals were not detected in the TCLP extract of the unstabilized incinerator ash. The test was also not performed on hexavalent chromium and thallium because these metals were not analyzed in the TCLP extract of the unstabilized ash. The results of the ANOVA test are presented in Table 4-5. The results indicate that, overall, fluidized bed incineration followed by lime and fly ash stabilization provides significantly better or equivalent treatment for most metal constituents (except for antimony and barium) than fluidized bed incineration alone or fluidized bed incineration followed by cement or kiln dust stabilization of the incinerator ash.

Wastewaters

For wastewaters generated from incineration of refinery wastes K048-K052, EPA has transferred treatment performance data for metal constituents (Section 4.1). Therefore, the ANOVA test was not performed and chromium reduction followed by lime and sulfide precipitation and vacuum filtration is determined as BDAT for metals in wastewater forms of K048-K052.

4.4 BDAT for K048-K052 Wastes

For nonwastewater forms of K048 and K051, the best demonstrated and available technology has been determined to be fluidized bed incineration

followed by lime and fly ash stabilization. Treatment standards have been developed for metals and organics in the nonwastewater and for organics in the wastewater residuals from this BDAT treatment train. For metals in wastewater residuals from treatment of K048-K052, the best demonstrated and available technology has been determined to be chromium reduction followed by lime and sulfide precipitation and vacuum filtration. As discussed in Section 2.0, EPA has determined that refinery waste group K048-K052 represents a waste treatability group; therefore, since fluidized bed incineration followed by lime and fly ash stabilization has been determined to be BDAT for nonwastewater forms of K048 and K051 wastes, this treatment train is also BDAT for nonwastewater forms of K049, K050, and K052. Similarly, the treatment train, chromium reduction followed by lime and sulfide precipitation and vacuum filtration, is also BDAT for metals in wastewater forms of K049, K050, and K052.

Table 4-1

TREATMENT CONCENTRATIONS FOR FLUIDIZED BED INCINERATOR ASH CORRECTED FOR ACCURACY: PLANT A

Constituent	Sample Set 1 (ppm)	2 (ppm)	3 (ppm)	4 (ppm)	5 (ppm)	6 (ppm)
VOLATILES						
21. Dichlorodifluoromethane (Concentration)	2.60	2.60	2.60	2.60	2.60	2.60
43. Toluene (Concentration)	3.75	2.50	2.50	2.50	2.50	2.50
Xylene (Concentration)	2.60	2.60	2.60	7.53	2.60	2.60
SEMIVOLATILES						
59. Benz(a)anthracene (Concentration)	0.30	0.30	0.30	0.30	0.30	0.30
62. Benzo(a)pyrene (Concentration)	0.30	0.30	0.30	0.30	0.30	0.30
70. Bis(2-ethylhexyl) phthalate (Concentration)	1.49	1.49	1.49	1.49	1.49	1.49
80. Chrysene (Concentration)	0.30	0.30	0.30	0.30	0.30	0.30
98. Di-n-butyl phthalate (Concentration)	1.49	1.49	1.49	1.49	1.49	1.49
109. Fluorene (Concentration)	0.30	0.30	0.30	0.30	0.30	0.30
121. Naphthalene (Concentration)	0.30	0.30	0.30	0.30	0.30	0.30
141. Phenanthrene (Concentration)	0.30	0.30	0.30	0.30	0.30	0.30
145. Pyrene (Concentration)	0.38	0.38	0.38	0.38	0.38	0.38

Table 4-1 (Continued)

TREATMENT CONCENTRATIONS FOR FLUIDIZED BED INCINERATOR ASH CORRECTED FOR ACCURACY: PLANT A

	Constituent	Sample Set 1 (ppm)	2 (ppm)	3 (ppm)	4 (ppm)	5 (ppm)	6 (ppm)
METALS							
154.	Antimony (TCLP)	0.08	0.08	0.12	0.08	0.08	0.09
155.	Arsenic (TCLP)	0.01	0.006	0.02	0.01	0.02	0.02
156.	Barium (TCLP)	0.19	0.26	0.18	0.27	0.22	0.23
157.	Beryllium (TCLP)	0.001	0.001	0.001	0.001	0.001	0.001
158.	Cadmium (TCLP)	0.004	0.004	0.004	0.004	0.004	0.004
159.	Chromium (total) (TCLP)	2.76	3.26	2.63	2.89	3.01	2.63
160.	Copper (TCLP)	0.02	0.02	0.02	0.02	0.02	0.02
161.	Lead (TCLP)	0.06	0.06	0.06	0.06	0.06	0.06
162.	Mercury (TCLP)	0.0003	0.0002	0.0002	0.0003	0.0003	0.0002
163.	Nickel (TCLP)	0.03	0.03	0.03	0.03	0.03	0.04
164.	Selenium (TCLP)	0.04	0.02	0.10	0.14	0.15	0.15
165.	Silver (TCLP)	0.012	0.012	0.012	0.012	0.012	0.012
167.	Vanadium (TCLP)	3.63	3.24	4.02	3.50	3.76	4.67
168.	Zinc (TCLP)	0.11	0.12	0.12	0.12	0.11	0.15

Table 4-1 (Continued)

TREATMENT CONCENTRATIONS FOR FLUIDIZED BED INCINERATOR ASH CORRECTED FOR ACCURACY: PLANT A

	Constituent	Sample Set 1 (ppm)	2 (ppm)	3 (ppm)	4 (ppm)	5 (ppm)	6 (ppm)
INORGANICS							
169.	Total Cyanide (Concentration)	0.096	0.38	0.096	0.48	0.096	0.48
171.	Sulfide (Concentration)	61	61	61	61	61	61

Table 4-2

TREATMENT CONCENTRATIONS FOR TCLP EXTRACTS OF
STABILIZED INCINERATOR ASH CORRECTED FOR ACCURACY: PLANT I

CONSTITUENT	Cement Binder			Kiln Dust Binder			Lime and Fly Ash Binder		
	Run 1 (ppm)	Run 2 (ppm)	Run 3 (ppm)	Run 1 (ppm)	Run 2 (ppm)	Run 3 (ppm)	Run 1 (ppm)	Run 2 (ppm)	Run 3 (ppm)
154. Antimony	0.22	0.22	0.22	0.25	0.27	0.25	0.22	0.22	0.22
155. Arsenic	0.003	0.003	0.003	0.004	0.004	0.004	0.003	0.003	0.004
156. Barium	0.29	0.30	0.30	0.22	0.22	0.23	0.58	0.54	0.62
157. Beryllium	0.001	0.001	0.001	0.001	0.001	0.001	0.001	0.001	0.001
158. Cadmium	0.004	0.004	0.004	0.004	0.004	0.004	0.004	0.004	0.004
159. Chromium (total)	2.65	2.66	2.71	2.37	2.55	2.49	1.47	1.58	1.41
221. Chromium (hexavalent)	0.66	0.52	3.94	0.37	0.39	2.09	1.43	1.12	0.74
160. Copper	0.003	0.003	0.017	0.004	0.004	0.004	0.004	0.004	0.008
161. Lead	0.006	0.006	0.011	0.026	0.012	0.008	0.008	0.008	0.008
163. Nickel	0.025	0.025	0.025	0.027	0.027	0.027	0.026	0.026	0.026
164. Selenium	0.03	0.026	0.029	0.059	0.057	0.053	0.015	0.019	0.020
165. Silver	0.008	0.008	0.008	0.008	0.008	0.008	0.008	0.008	0.008
166. Thallium	0.002	0.015	0.002	0.002	0.002	0.002	0.002	0.002	0.002
167. Vanadium	1.02	1.57	1.67	3.49	4.20	3.56	0.16	0.16	0.17
168. Zinc	0.078	0.063	0.12	0.068	0.059	0.044	0.029	0.032	0.076

Table 4-3

TREATMENT CONCENTRATIONS FOR BDAT LIST ORGANIC CONSTITUENTS
CORRECTED FOR ACCURACY
(K019 SCRUBBER WATER)

		Sample Set					
	Constituent	1 (ppm)	2 (ppm)	3 (ppm)	4 (ppm)	5 (ppm)	6 (ppm)
7.	Carbon tetrachloride	0.003	0.003	0.003	0.003	0.003	0.003
9.	Chlorobenzene	0.002	0.002	0.002	0.002	0.002	0.002
14.	Chloroform	0.003	0.003	0.003	0.003	0.003	0.003
21.	Dichlorodifluoromethane	0.003	0.003	0.006	0.018	0.003	0.003
22.	1,1-Dichloroethane	0.003	0.003	0.003	0.003	0.003	0.003
23.	1,2-Dichloroethane	0.003	0.003	0.003	0.003	0.003	0.003
42.	Tetrachloroethene	0.003	0.003	0.003	0.003	0.003	0.003
43.	Toluene	0.003	0.004	0.003	0.006	0.003	0.003
45.	1,1,1-Trichloroethane	0.003	0.003	0.003	0.003	0.003	0.003
47.	Trichloroethene	0.002	0.002	0.002	0.002	0.002	0.002
68.	Bis(2-chloroethyl)ether	0.002	0.002	0.002	0.002	0.002	0.002
88.	p-Dichlorobenzene	0.003	0.003	0.003	0.003	0.003	0.003
98.	Di-n-butyl phthalate	0.002	0.008	0.005	0.005	0.003	0.003
109.	Fluorene	0.002	0.002	0.002	0.002	0.002	0.002
110.	Hexachlorobenzene	0.012	0.012	0.012	0.012	0.012	0.012
113.	Hexachloroethane	0.012	0.012	0.012	0.012	0.012	0.012
121.	Naphthalene	0.002	0.002	0.002	0.002	0.002	0.002
136.	Pentachlorobenzene	0.012	0.012	0.012	0.012	0.012	0.012
141.	Phenanthrene	0.002	0.002	0.002	0.002	0.002	0.002
148.	1,2,4,5-Tetrachlorobenzene	0.006	0.006	0.006	0.006	0.006	0.006
150.	1,2,4-Trichlorobenzene	0.008	0.008	0.008	0.008	0.008	0.008

Table 4-4

TREATMENT CONCENTRATIONS FOR BDAT LIST METAL CONSTITUENTS CORRECTED FOR ACCURACY
(K062 AND METAL-BEARING CHARACTERISTIC WASTES)

	Corrected Treatment Concentration (ppm)										
Sample Set	1	2	3	4	5	6	7	8	9	11	12
Constituent											
159. Chromium (total)	0.18	0.18	0.29	0.15	0.16	0.15	0.18	0.22	0.15	0.18	0.23
162. Lead	0.013	0.013	0.013	0.013	0.013	0.013	0.013	0.013	0.013	0.013	0.013
169. Zinc	0.13	0.12	0.14	1.6	0.13	0.097	0.12	0.13	0.061	0.071	0.10

Table 4-5

RESULTS OF THE ANALYSIS OF VARIANCE TEST COMPARING FLUIDIZED BED INCINERATION AND FLUIDIZED BED INCINERATION FOLLOWED BY ASH STABILIZATION

BDAT Metals	Fluidized Bed Incineration	Fluidized Bed Incineration Followed by Ash Stabilization Using the Following Binders*		
		Cement	Kiln Dust	Lime and Fly Ash
154. Antimony	1	2	4	2
155. Arsenic	4	1	1	1
156. Barium	1	2	1	4
159. Chromium (total)	4	4	2	1
160. Copper	4	1	1	1
163. Nickel	1	1	1	1
164. Selenium	4	2	3	1
167. Vanadium	4	2	4	1
168. Zinc	4	1	1	1

* The numbers in the table indicate the results of the statistical comparison (ANOVA) of treatments. A ranking of 1 to 4 is shown for each constituent and treatment test where a "1" indicates the best performance and a "4" indicates the worst performance. Two treatments with the same number for a constituent indicates that there was no significant difference between the treatment effectiveness.

5.0 SELECTION OF REGULATED CONSTITUENTS

This section presents the methodology and rationale for selection of the constituents that are being proposed for regulation in wastewater and nonwastewater forms of K048-K052 wastes.

The Agency initially considers for regulation all constituents on the BDAT List (see Table 1-1, Section 1.0). Table 5-1 presents a summary of the BDAT List constituents that were detected in untreated K048-K052. All BDAT List constituents that were detected in the untreated waste were further considered for regulation in that waste, unless a constituent was deleted from consideration for one of the following reasons: (1) the constituent was not present at treatable levels in the untreated wastes; or (2) the constituent was detected in an untreated waste at treatable levels but treatment performance data demonstrating effective treatment by BDAT were unavailable for that constituent in the waste or for a waste judged to be similar. Table 5-2 presents constituents from the BDAT constituent list that were considered for regulation following deletion of certain constituents for the reasons described above. The constituents selected for regulation in wastewater and nonwastewater forms of K048-K052 are presented in Table 5-3.

Not all BDAT List constituents considered for regulation and shown on Table 5-2 were selected for regulation. The Agency selects constituents for regulation after consideration of the concentration of the constituent in the untreated waste, the relative difficulty associated with achievement of

effective treatment of the constituent by BDAT, and the level of control of the constituent that can be expected through treatment required to comply with treatment standards established for other constituents in the waste.

The following subsections describe in more detail the selection of constituents proposed for regulation in K048-K052.

5.1 BDAT List Constituents Detected in the Untreated Waste

BDAT List constituents that were detected in untreated K048-K052 were considered for regulation. A BDAT List constituent was not considered for regulation if: (1) the constituent was not detected in the untreated waste; (2) the constituent was not analyzed in the untreated waste; or (3) detection limits or analytical results were not obtained for the constituent due to analytical or accuracy problems. The constituents that were not considered for regulation for these reasons are identified in Table 5-1; each reason is explained in more detail below. Some constituents that were detected in the untreated wastes were deleted from consideration for regulation as discussed in Section 5.2. The steps describing the selection of regulated constituents are presented in Section 5.3.

Constituents That Were Not Detected in the Untreated Waste. Constituents that were not detected in the untreated waste (labelled ND or ND* in Table 5-1) were not considered for regulation. Analytical detection limits were, in most cases, practical quantification limits. In some cases, where

data were submitted to the Agency by outside sources, the nature of the detection limits and whether or not the waste was analyzed for a constituent are unknown (labelled ND* in Table 5-1). Since detection limits vary depending upon the nature of the waste matrix being analyzed, the detection limits determined in the characterization of these wastes are included in Appendix H.

Constituents That Were Not Analyzed. Some constituents on the BDAT List were not considered for regulation because they were not analyzed in the untreated wastes (labelled NA, NA*, or NA** in Table 5-1). Some constituents were not analyzed in the untreated wastes based on the judgment that it is extremely unlikely that the constituent would be present in the wastes (NA**). Other constituents were not analyzed in the untreated waste because they were not on the BDAT List of constituents at the time of analysis (NA*). In cases where data were submitted to the Agency by outside sources, it may not be known if and/or why constituents were not analyzed (NA).

Constituents For Which Analytical Results Were Not Obtained Due to Analytical or Accuracy Problems. Some constituents on the BDAT List were not considered for regulation because detection limits or analytical results were not obtained due to analytical or accuracy problems (labelled A in Table 5-1). The analytical and accuracy problems include: (1) laboratory QA/QC analyses indicated inadequate recoveries and, therefore, the accuracy of the analysis for the constituent could not be ensured; (2) a standard was not available for the constituent and, therefore, system calibration could not be performed for

the constituent; and (3) colorimetric interferences occurred during analysis for the constituent and, therefore, accurate analyses could not be performed.

5.2 Constituents Detected in Untreated Waste But Not Considered for Regulation

BDAT List constituents that were detected in the untreated K048-K052 wastes were not considered for regulation if: (1) available treatment performance data for the constituent did not show effective treatment by BDAT; or (2) treatment performance data were not available for the constituent; or (3) the constituent was not present at treatable concentrations in the waste. The specific constituents deleted from further consideration for regulation for these reasons are discussed below. In addition, one constituent, dichlorodifluoromethane, was deleted from consideration for regulation in nonwastewater and wastewater. Dichlorodifluoromethane was detected in two of six samples of untreated K048 collected by EPA from Plant A; however, the constituent was also detected at a higher concentration in another waste (biosludge) that was mixed with K048 prior to the collection of the K048 sample. Additionally, dichlorodifluoromethane was not reported as present in K048 in other data sources, as shown in Table 2-4. Therefore, dichlorodifluoromethane was not considered for regulation in K048. BDAT List constituents that were further considered for regulation following the deletions described in this section are listed on Table 5-2.

Nonwastewater. BDAT List constituents that were present in an untreated K048-K052 waste but were not effectively treated by the BDAT technology, were deleted from consideration for regulation for the nonwastewater forms of the K048-K052 waste treatability group. Accordingly, sulfide was not considered for regulation in nonwastewater because the technology determined to be BDAT for K048-K052 (fluidized bed incineration followed by lime and fly ash stabilization) does not provide effective treatment for this constituent. Moreover, the Agency is unaware of any demonstrated technology for treatment of sulfide in K048-K052.

Similarly, antimony, barium, beryllium, cadmium, lead, mercury, and silver were not considered for regulation in nonwastewater because stabilization of fluidized bed incinerator ash did not show effective treatment for these constituents. Hexavalent chromium and fluoride were not considered for regulation in nonwastewater because they were not analyzed in both the unstabilized and stabilized incinerator ash and therefore the effectiveness of treatment could not be evaluated for these constituents.

Wastewater. Sulfide and barium were deleted from further consideration for regulation in wastewaters because they were not effectively treated by the BDAT technologies. Sulfide was not regulated in wastewater because the Agency is not aware of a demonstrated technology for reducing sulfide in K048-K052 waste. Barium was not regulated in wastewater because it is not effectively treated by chromium reduction followed by lime and sulfide precipitation and vacuum filtration.

Cyanide was deleted from further consideration for regulation in wastewaters because, based on the concentration of cyanide in the untreated wastes, EPA believes that it would not be present at treatable concentrations in the wastewater residual.

Some BDAT List organic constituents were deleted from consideration for regulation in wastewater because treatment performance data are not available for the constituents and because adequate control of the constituents could not be shown based on their bond dissociation energies. The Agency does not currently have data on BDAT List organics in wastewater residuals that specifically reflect treatment of K048-K052. Therefore, treatment performance data for BDAT List organics were transferred to K048-K052 from data for scrubber water residuals generated from incineration of K019.

For organics in wastewater, determination of adequate control was based on an evaluation of the characteristics of the constituents that would affect performance of incineration relative to the scrubber water residual, specifically, the estimated bond dissociation energies for the constituents. In general, a constituent is believed to be controlled by regulation of another constituent that has a higher bond dissociation energy. Based on a comparison of bond dissociation energies, it cannot be shown that benz(a)-anthracene, benzo(a)pyrene, bis(2-ethylhexyl)phthalate, chrysene, di-n-butyl phthalate, and pyrene will be controlled by regulation of another constituent and performance data are not available from K019 scrubber water for

transfer to these constituents. The bond dissociation energies for these constituents exceed the bond energies of all constituents detected in the untreated K019. Constituents with bond dissociation energies that exceed the bond dissociation energies for all constituents in the transferred data were deleted from consideration for regulation. The Agency has collected six scrubber water residual samples generated from incineration of K048 and is currently analyzing these samples. The Agency will consider these data between proposal and promulgation in the selection of constituents for regulation and in establishing final BDAT treatment standards applicable to wastewater.

5.3 Constituents Selected for Regulation

BDAT List constituents selected for regulation in K048-K052 are presented in Table 5-3. The selection of regulated constituents for nonwastewater is discussed in Section 5.3.1 and for wastewater in Section 5.3.2.

5.3.1 Selection of Regulated Constituents in Nonwastewater

Regulated organic and inorganic constituents in nonwastewater were selected from those BDAT List organic and inorganic constituents detected in the untreated wastes that were treated by fluidized bed incineration. Regulated metal constituents were selected from those BDAT List metal constituents detected in the untreated wastes that were treated by stabilization of ash from fluidized bed incineration.

As explained in Section 1,the Agency is not regulating all of the constituents considered for regulation (Table 5-2) due to the costs associated with compliance. Table 5-3 presents the constituents selected for regulation after consideration of: (1) constituent concentration levels in the untreated waste; (2) whether the constituents are adequately controlled by the regulation of another constituent; and (3) the relative difficulty associated with achieving effective treatment of the constituent by BDAT. For organics, determination of adequate control was based on an evaluation of the characteristics of the constituents that would affect performance of fluidized bed incineration, specifically, the boiling point of the constituents. In general, a constituent is believed to be controlled by regulation of another constituent that has a higher boiling point. Boiling points for all BDAT List constituents considered for regulation are tabulated in Appendix I. For metals, the Agency is regulating all treated constituents because the characteristics that affect the performance of stabilization do not provide for control of other constituents. The constituents selected for regulation are discussed below for each waste code.

K048

(i) Organic and Inorganic Constituents. Toluene, xylene, bis(2-ethylhexyl)phthalate, chrysene, di-n-butyl phthalate, naphthalene, phenanthrene, phenol, and cyanide were selected for regulation in K048 nonwastewater. Ethylbenzene, benzo(a)pyrene, fluorene, and pyrene were considered for regulation but were not selected because these constituents were found at

lower concentrations in the untreated waste and they are believed to be adequately controlled by incineration of other constituents which have been selected for regulation. This decision was based on a comparison of boiling points of those constituents considered for regulation. EPA believes that ethylbenzene (bp 136°C) will be adequately controlled by regulation of xylene (bp 140°C), bis(2-ethylhexyl)phthalate (bp 385°C), chrysene (bp 448°C), naphthalene (bp 218°C), phenanthrene (bp 340°C), and phenol (bp 182°C). Benzo(a)pyrene (bp 311°C) and fluorene (bp 295°C) will be adequately controlled by regulation of bis(2-ethylhexyl)phthalate (bp 385°C), chrysene (bp 448°C), di-n-butyl phthalate (bp 340°C), and phenanthrene (bp 340°C). Pyrene (bp 404°C) will be adequately controlled by regulation of chrysene (bp 448°C).

(ii) Metal Constituents. In addition to the organic and inorganic constituents, all of the metal constituents further considered for regulation (arsenic, total chromium, copper, nickel, selenium, vanadium, and zinc) were selected for regulation in K048 nonwastewater.

K049

(i) Organic and Inorganic Constituents. Benzene, toluene, xylene, chrysene, naphthalene, phenanthrene, phenol, pyrene, and cyanide were selected for regulation in K049 nonwastewater. Carbon disulfide, ethylbenzene, anthracene, benzo(a)pyrene, bis(2-ethylhexyl)phthalate, and 2,4-dimethylphenol were considered for regulation but were not selected because these constituents were found at lower concentrations in the untreated waste and they are

believed to be adequately controlled by incineration of other constituents which have been selected for regulation. This decision was based on a comparison of boiling points of those constituents considered for regulation. EPA believes that carbon disulfide (bp 46°C) will be adequately controlled by regulation of benzene (bp 80°C), toluene (bp 111°C), xylene (bp 140°C), chrysene (bp 448°C), naphthalene (bp 218°C), phenanthrene (bp 340°C), phenol (bp 182°C), and pyrene (404°C). Ethylbenzene (bp 136°C) will be adequately controlled by regulation of xylene (bp 140°C), chrysene (bp 448°C), naphthalene (bp 218°C), phenanthrene (bp 340°C), phenol (bp 182°C), and pyrene (bp 404°C). Anthracene (bp 342°C) and bis(2-ethylhexyl)phthalate (bp 385°C) will be adequately controlled by regulation of chrysene (bp 448°C) and pyrene (bp 404°C). Benzo(a)pyrene (bp 311°C) will be adequately controlled by regulation of chrysene (bp 448°C) phenanthrene (bp 340°C), and pyrene (bp 404°C). 2,4-Dimethylphenol (bp 212°C) will be adequately controlled by regulation of chrysene (bp 448°C), naphthalene (bp 218°C), phenanthrene (bp 340°C), and pyrene (bp 404°C).

(ii) Metal Constituents. In addition to the organic and inorganic constituents, all of the metal constituents further considered for regulation (arsenic, chromium, copper, nickel, selenium, vanadium, and zinc) were selected for regulation in K049 nonwastewater.

K050

(i) Organic, Metal, and Inorganic Constituents. All of the organic, metal, and inorganic constituents further considered for regulation (benzo(a)pyrene, phenol, arsenic, total chromium, copper, nickel, selenium, vanadium, zinc, and cyanide) were selected for regulation in K050 nonwastewater.

K051

(i) Organic and Inorganic Constituents. Toluene, xylene, chrysene, di-n-butyl phthalate, naphthalene, phenanthrene, phenol, pyrene, and cyanide were selected for regulation in K051 nonwastewater. Ethylbenzene, acenaphthene, benz(a)anthracene, benzo(a)pyrene, bis(2-ethylhexyl)phthalate, and fluorene were considered for regulation but were not selected because these constituents were found at lower concentrations in the untreated waste and they are believed to be adequately controlled by incineration of other constituents which have been selected for regulation. This decision was based on a comparison of boiling points of those constituents considered for regulation. EPA believes that ethylbenzene (bp 136°C) will be adequately controlled by regulation of xylene (bp 140°C), chrysene (bp 448°C), di-n-butyl phthalate (bp 340°C), naphthalene (bp 218°C), phenanthrene (bp 340°C), phenol (bp 182°C), and pyrene (bp 404°C). Acenaphthene (bp 279°C), benzo(a)pyrene (bp 311°C), and fluorene (bp 295°C) will be adequately be controlled by the regulation of chrysene (bp 448°C), di-n-butyl phthalate (bp 340°C), phenanthrene (bp 340°C), and pyrene (bp 404°C). Benz(a)anthracene (bp 435°C) will

be adequately controlled by the regulation of chrysene (bp 448°C). Bis(2-ethylhexyl)phthalate (bp 385°C) will be adequately controlled by the regulation of chrysene (bp 448°C) and pyrene (bp 404°C).

(ii) Metal Constituents. In addition to the organic and inorganic constituents, all of the metal constituents further considered for regulation (arsenic, total chromium, copper, nickel, selenium, vanadium, and zinc) were selected for regulation in K051 nonwastewater.

K052

(i) Organic and Inorganic Constituents. Toluene, xylene, ortho-cresol, para-cresol, naphthalene, phenanthrene, phenol, and cyanide were selected for regulation in K052 nonwastewater. Benzene, ethylbenzene, benzo-(a)pyrene, and 2,4-dimethylphenol were considered for regulation but were not selected because these constituents were found at lower concentrations in the untreated waste and they are believed to be adequately controlled by incineration of other constituents which have been selected for regulation. This decision was based on a comparison of boiling points of those constituents considered for regulation. EPA believes that benzene (bp 80°C) will be adequately controlled by the regulation of toluene (bp 111°C), xylene (bp 140°C), ortho-cresol (bp 192°C), para-cresol (bp 202°C), naphthalene (bp 218°C), phenanthrene (bp 340°C), and phenol (bp 182°C). Ethylbenzene (bp 136°C) will be adequately controlled by regulation of xylene (bp 140°C), ortho-cresol (bp 192°C), para-cresol (bp 202°C), naphthalene (bp 218°C), phenanthrene (bp 340°C), and phenol (bp 182°C). Benzo(a)pyrene (bp 311°C)

will be adequately controlled by the regulation of phenanthrene (bp 340°C). 2,4-Dimethylphenol (bp 212°C) will be adequately controlled by the regulation of naphthalene (bp 218°C), and phenanthrene (bp 340°C).

(ii) Metal Constituents. In addition to the organic and inorganic constituents, all of the metal constituents further considered for regulation (arsenic, total chromium, copper, nickel, selenium, vanadium, and zinc) were selected for regulation in K052 nonwastewater.

5.3.2 Selection of Regulated Constituents in Wastewater

Regulated organic constituents in wastewater were selected from the BDAT List organic constituents detected in the untreated wastes and similar wastes that showed treatment using incineration. Regulated metal and inorganic constituents were selected from BDAT List metal and inorganic constituents detected in the untreated wastes and similar wastes that showed treatment using incineration followed by wastewater treatment using chromium reduction, lime and sulfide precipitation, and vacuum filtration.

As explained in Section 1.0, the Agency is not regulating all of the constituents considered for regulation (Table 5-2) due to the costs associated with compliance. Table 5-3 presents the constituents selected for regulation after consideration of: (1) constituent concentration in the untreated waste; (2) whether the constituents are adequately controlled by the regulation of

another constituent; and (3) the relative difficulty associated with achieving effective treatment of the constituent by BDAT.

As discussed in Section 5.2, determination of adequate control for organics in the scrubber water residual was based on the calculated bond dissociation energies (BDE) for the constituents. In general, a constituent is believed to be controlled by regulation of another constituent that has a higher bond dissociation energy. Bond dissociation energies for all BDAT List constituents considered for regulation are tabulated in Appendix I.

Treatment performance data for metals in K048-K052 wastewater were transferred from treatment of K062 and metal-bearing characteristic wastes. The BDAT technology is chromium reduction followed by lime and sulfide precipitation and vacuum filtration. For inorganics and metals, determination of adequate control was based on an evaluation of the characteristics of the constituents that would affect performance of the BDAT wastewater treatment system.

The constituents selected for regulation and the constituents controlled by regulating other constituents are discussed below by waste code.

K048

(i) Organic Constituents. The organic constituents for regulation in K048 wastewater are toluene, xylene, fluorene, naphthalene, phenanthrene,

and phenol. Ethylbenzene was considered for regulation but was not selected because it was found at lower concentrations in the untreated waste and it is believed to be adequately controlled by incineration of other constituents that were selected for regulation. This decision was based on a comparison of bond dissociation energies (BDE) of those constituents considered for regulation. EPA believes that ethylbenzene (BDE 1,920 kcal/mole) will be adequately controlled by regulation of naphthalene (BDE 2,095 kcal/mole), fluorene (BDE 2,700 kcal/mole), and phenanthrene (BDE 2,900 kcal/mole).

(ii) Metals and Inorganic Constituents. Total chromium, lead, and zinc were selected for regulation in K048 wastewater. Antimony, arsenic, beryllium, cadmium, copper, mercury, nickel, selenium, silver, and vanadium were considered for regulation but were not selected because these constituents were found at lower concentrations in the untreated waste than other constituents and they are believed to be adequately controlled by standards established for total chromium, lead, and zinc. Control is provided by the use of chromium reduction followed by lime and sulfide precipitation and vacuum filtration treatment. By removing the metals present at the highest concentrations in the untreated waste, adequate treatment will be provided for other metals present at treatable concentrations.

K049

(i) Organic Constituents. The organic constituents selected for regulation in K049 wastewater are benzene, toluene, xylene, anthracene,

2,4-dimethylphenol, naphthalene, phenanthrene, and phenol. Carbon disulfide and ethyl benzene were considered for regulation but were not selected because they were found at lower concentrations in the untreated waste and they are believed to be adequately controlled by incineration of other constituents that were selected for regulation. This decision was based on a comparison of bond dissociation energies (BDE) of those constituents considered for regulation. EPA believes that carbon disulfide (BDE 279 kcal/mole) will be adequately controlled by regulation of benzene (BDE 1,320 kcal/mole), toluene (BDE 1,235 kcal/mole), xylene (BDE 1,220 kcal/mole), anthracene (BDE 2,870 kcal/mole), 2,4-dimethylphenol (BDE 1,390 kcal/mole), naphthalene (BDE 2,095 kcal/mole), phenanthrene (BDE 2,900 kcal/mole), and phenol (BDE 1,421 kcal/mole). Ethylbenzene (BDE 1,920 kcal/mole) will be adequately controlled by regulation of naphthalene (BDE 2,095 kcal/mole), anthracene (BDE 2,870 kcal/mole), and phenanthrene (BDE 2,900 kcal/mole).

(ii) Metals and Inorganic Constituents. Total chromium, lead, and zinc were selected for regulation in K049 wastewater. Antimony, arsenic, beryllium, cadmium, hexavalent chromium, copper, mercury, nickel, selenium silver, vanadium, and fluoride were considered for regulation but were not selected because these constituents were found at lower concentrations in the untreated waste than other constituents and they are believed to be adequately controlled by standards established for total chromium, lead, and zinc. Control is provided by the use of chromium reduction followed by lime and sulfide precipitation and vacuum filtration treatment. By removing the metals

present at the highest concentrations in the untreated waste, adequate treatment will be provided for other metals present at treatable concentrations.

K050

(i) Organic Constituents. The organic constituent further considered for regulation (phenol) was selected for regulation in K050 wastewater.

(ii) Metals and Inorganic Constituents. Total chromium, lead, and zinc were selected for regulation in K050 wastewater. Arsenic, beryllium, cadmium, hexavalent chromium, copper, mercury, nickel, selenium, silver, and vanadium were considered for regulation but were not selected because these constituents were found at lower concentrations in the untreated waste than other constituents and they are believed to be adequately controlled by standards established for total chromium, lead, and zinc. Control is provided by the use of chromium reduction followed by lime and sulfide precipitation and vacuum filtration treatment. By removing the metals present at the highest concentrations in the untreated waste, adequate treatment will be provided for other metals present at treatable concentrations.

K051

(i) Organic Constituents. The organic constituents selected for regulation in K051 wastewater are toluene, xylene, acenaphthene, fluorene, naphthalene, phenanthrene, and phenol. Ethylbenzene was considered for

regulation but was not selected because it was found at lower concentrations in the untreated waste and it is believed to be adequately controlled by incineration of other constituents that were selected for regulation. This decision was based on a comparison of bond dissociation energies (BDE) of those constituents considered for regulation. EPA believes that ethylbenzene (BDE 1,920 kcal/mole) will be adequately controlled by regulation of naphthalene (BDE 2,095 kcal/mole), acenaphthene (BDE 2,406 kcal/mole), fluorene (BDE 2,700 kcal/mole), and phenanthrene (BDE 2,900 kcal/mole).

(ii) Metals and Inorganic Constituents. Total chromium, lead, and zinc were selected for regulation in K051 wastewater. Antimony, arsenic, beryllium, cadmium, hexavalent chromium, copper, mercury, nickel, selenium, silver, and vanadium were considered for regulation but were not selected because these constituents were found at lower concentrations in the untreated waste than other constituents and they are believed to be adequately controlled by standards established for total chromium, lead, and zinc. Control is provided by the use of chromium reduction followed by lime and sulfide precipitation and vacuum filtration treatment. By removing the metals present at the highest concentrations in the untreated waste, adequate treatment will be provided for other metals present at treatable concentrations.

K052

(i) Organic Constituents. The organic constituents selected for regulation in K052 wastewater are benzene, xylene, ortho-cresol, para-cresol,

2,4-dimethylphenol, naphthalene, phenanthrene, and phenol. Ethyl benzene and toluene were considered for regulation but were not selected because they were found at lower concentrations in the untreated waste and they are believed to be adequately controlled by incineration of other constituents that were selected for regulation. This decision was based on a comparison of bond dissociation energies (BDE) of those constituents considered for regulation. EPA believes that ethyl benzene (BDE 1,920 kcal/mole) will be adequately controlled by regulation of naphthalene (BDE 2,095 kcal/mole) and phenanthrene (BDE 2,900 kcal/mole). Toluene (BDE 1,235 kcal/mole) will be adequately controlled by regulation of benzene (BDE 1,320 kcal/mole), 2,4-dimethylphenol (BDE 1,390 kcal/mole), ortho-cresol (BDE 1,405 kcal/mole), para-cresol (BDE 1,405 kcal/mole), naphthalene (BDE 2,095 kcal/mole), and phenanthrene (BDE 2,900 kcal/mole).

(ii) Metals and Inorganic Constituents. Total chromium, lead, and zinc were selected for regulation in K052 wastewater. Antimony, arsenic, beryllium, cadmium, copper, mercury, nickel, selenium, silver, vanadium, and fluoride were considered for regulation but were not selected because these constituents are present at lower concentrations in the untreated waste than other constituents and they are believed to be adequately controlled by standards established for total chromium, lead, and zinc. Control is provided by the use of chromium reduction followed by lime and sulfide precipitation and vacuum filtration treatment. By removing the metals present at the highest concentrations in the untreated waste, adequate treatment will be provided for other metals present at treatable concentrations.

Table 5-1

BDAT LIST CONSTITUENTS DETECTED IN UNTREATED K048-K052 WASTES

Volatiles		K048	K049	K050	K051	K052
222.	Acetone	NA*	NA*	NA	NA*	NA*
1.	Acetonitrile	ND	ND	ND*	ND	ND
2.	Acrolein	ND	ND	ND*	ND	ND
3.	Acrylonitrile	ND	ND	ND*	ND	ND
4.	Benzene	ND	D	ND*	ND	D
5.	Bromodichloromethane	ND	ND	ND*	ND	ND
6.	Bromomethane	ND	ND	ND*	ND	ND
223.	n-Butyl alcohol	NA*	NA*	NA	NA*	NA*
7.	Carbon tetrachloride	ND	ND	ND*	ND	ND
8.	Carbon disulfide	A	D	ND*	A	ND
9.	Chlorobenzene	ND	ND	ND*	ND	ND
10.	2-Chloro-1,3-butadiene	ND	ND	ND*	ND	ND
11.	Chlorodibromomethane	ND	ND	ND*	ND	ND
12.	Chloroethane	ND	ND	ND*	ND	ND
13.	2-Chloroethyl vinyl ether	A	ND	ND*	A	ND
14.	Chloroform	ND	ND	ND*	ND	ND
15.	Chloromethane	ND	ND	ND*	ND	ND
16.	3-Chloropropene	ND	ND	ND*	ND	ND
17.	1,2-Dibromo-3-chloropropane	ND	ND	ND*	ND	ND
18.	1,2-Dibromoethane	ND	ND	ND*	ND	ND
19.	Dibromomethane	ND	ND	ND*	ND	ND
20.	trans-1,4-Dichloro-2-butene	ND	ND	ND*	ND	ND
21.	Dichlorodifluoromethane	D	ND	ND*	ND	ND
22.	1,1-Dichloroethane	ND	ND	ND*	ND	ND
23.	1,2-Dichloroethane	ND	ND	ND*	ND	ND
24.	1,1-Dichloroethylene	ND	ND	ND*	ND	ND
25.	trans-1,2-Dichloroethene	ND	ND	ND*	ND	ND
26.	1,2-Dichloropropane	ND	ND	ND*	ND	ND
27.	trans-1,3-Dichloropropene	ND	ND	ND*	ND	ND
28.	cis-1,3-Dichloropropene	ND	ND	ND*	ND	ND
29.	1,4-Dioxane	A	ND	ND*	A	ND
224.	2-Ethoxyethanol	NA*	NA*	NA	NA*	NA*
225.	Ethyl acetate	NA*	NA*	NA	NA*	NA*
226.	Ethyl benzene	D	D	NA	D	D

A - Constituent was analyzed but a detection limit or analytical result was not obtained due to analytical problems.
D - Constituent was detected in the untreated waste.
NA - Believe that untreated waste was not analyzed for this constituent.
NA* - Untreated waste was not analyzed for this constituent because it was not on the BDAT List at the time of analysis.
NA** - Untreated waste was not analyzed for this constituent due to extreme unlikelihood that it would be present.
ND - Constituent was not detected in the untreated waste.
ND* - Believe that constituent was not detected in the untreated waste.

Table 5-1 (Continued)

BDAT LIST CONSTITUENTS DETECTED IN UNTREATED K048-K052 WASTES

		K048	K049	K050	K051	K052
Volatiles (Cont.)						
30.	Ethyl cyanide	ND	ND	ND*	ND	ND
227.	Ethyl ether	NA*	NA*	NA	NA*	NA*
31.	Ethyl methacrylate	ND	ND	ND*	ND	ND
214.	Ethylene Oxide	NA*	NA*	NA	NA*	NA*
32.	Iodomethane	ND	ND	ND*	ND	ND
33.	Isobutyl alcohol	ND	ND	ND*	ND	ND
228.	Methanol	NA*	NA*	NA	NA*	NA*
34.	Methyl ethyl ketone	ND	ND	ND*	ND	ND
229.	Methyl isobutyl ketone	NA*	NA*	NA*	NA*	NA*
35.	Methyl methacrylate	ND	ND	ND*	ND	ND
37.	Methacrylonitrile	ND	ND	ND*	ND	ND
38.	Methylene chloride	ND	ND	ND*	ND	ND
230.	2-Nitropropane	NA*	NA*	NA	NA*	NA*
39.	Pyridine	ND	ND	ND*	ND	ND
40.	1,1,1,2-Tetrachloroethane	ND	ND	ND*	ND	ND
41.	1,1,2,2-Tetrachloroethane	ND	ND	ND*	ND	ND
42.	Tetrachloroethene	ND	ND	ND*	ND	ND
43.	Toluene	D	D	ND*	D	D
44.	Tribromomethane	ND	ND	ND*	ND	ND
45.	1,1,1-Trichloroethane	ND	ND	ND*	ND	ND
46.	1,1,2-Trichloroethane	ND	ND	ND*	ND	ND
47.	Trichloroethene	ND	ND	ND*	ND	ND
48.	Trichloromonofluoromethane	ND	ND	ND*	ND	ND
49.	1,2,3-Trichloropropane	ND	ND	ND*	ND	ND
231.	1,1,2-Trichloro-1,2,2,-trifluoroethane	NA*	NA*	NA	NA*	NA*
50.	Vinyl chloride	ND	ND	ND*	ND	ND
215.	1,2-Xylene	D*	D*	ND*	D*	D*
216.	1,3-Xylene	D*	D*	ND*	D*	D*
217.	1,4-Xylene	D*	D*	ND*	D*	D*
Semivolatiles						
51.	Acenaphthalene	ND	ND	ND*	ND	ND
52.	Acenaphthene	ND	ND	ND*	D	ND
53.	Acetophenone	ND	ND	ND*	ND	ND

A - Constituent was analyzed but a detection limit or analytical result was not obtained due to analytical problems.
D - Constituent was detected in the untreated waste.
D* - Xylene was detected in the untreated waste. Analyses for individual isomers are not available.
NA - Believe that untreated waste was not analyzed for this constituent.
NA* - Untreated waste was not analyzed for this constituent because it was not on the BDAT List at the time of analysis.
NA** - Untreated waste was not analyzed for this constituent due to extreme unlikelihood that it would be present.
ND - Constituent was not detected in the untreated waste.
ND* - Believe that constituent was not detected in the untreated waste.

Table 5-1 (Continued)

BDAT LIST CONSTITUENTS DETECTED IN UNTREATED K048-K052 WASTES

Semivolatiles (Cont.)		K048	K049	K050	K051	K052
54.	2-Acetylaminofluorene	A	ND	ND*	A	ND
55.	4-Aminobiphenyl	ND	ND	ND*	ND	ND
56.	Aniline	ND	ND	ND*	ND	ND
57.	Anthracene	ND	D	ND*	ND	ND
58.	Aramite	A	A	ND*	A	A
59.	Benz(a)anthracene	ND	ND	ND*	D	ND
218.	Benzal chloride	NA*	NA*	NA	NA*	NA*
60.	Benzenethiol	A	A	ND*	A	A
62.	Benzo(a)pyrene	D	D	D	D	D
63.	Benzo(b)fluoranthene	A	ND	ND*	A	ND
64.	Benzo(ghi)perylene	ND	ND	ND*	ND	ND
65.	Benzo(k)fluoranthene	ND	ND	ND*	ND	ND
66.	p-Benzoquinone	A	A	ND*	A	A
67.	Bis(2-chloroethoxy)ethane	ND	ND	ND*	ND	ND
68.	Bis(2-chloroethyl)ether	ND	ND	ND*	ND	ND
69.	Bis(2-chloroisopropyl)ether	ND	ND	ND*	ND	ND
70.	Bis(2-ethylhexyl)phthalate	D	D	ND*	D	ND
71.	4-Bromophenyl phenyl ether	ND	ND	ND*	ND	ND
72.	Butyl benzyl phthalate	ND	ND	ND*	ND	ND
73.	2-sec-Butyl-4,6-dinitrophenol	A	ND	ND*	A	ND
74.	p-Chloroaniline	ND	ND	ND*	ND	ND
75.	Chlorobenzilate	A	A	ND*	A	A
76.	p-Chloro-m-cresol	ND	ND	ND*	ND	ND
77.	2-Chloronaphthalene	ND	ND	ND*	ND	ND
78.	2-Chlorophenol	ND	ND	ND*	ND	ND
79.	3-Chloropropionitrile	A	A	ND*	A	A
80.	Chrysene	D	D	ND*	D	ND
81.	ortho-Cresol	ND	ND	ND*	ND	D
82.	para-Cresol	ND	ND	ND*	ND	D
232.	Cyclohexanone	NA*	NA*	NA	NA*	NA*
83.	Dibenz(a,h)anthracene	ND	ND	ND*	ND	ND
84.	Dibenzo(a,e)pyrene	A	A	ND*	A	A
85.	Dibenzo(a,i)pyrene	A	A	ND*	A	A
86.	m-Dichlorobenzene	ND	ND	ND*	ND	ND

A - Constituent was analyzed but a detection limit or analytical result was not obtained due to analytical problems.
D - Constituent was detected in the untreated waste.
NA - Believe that untreated waste was not analyzed for this constituent.
NA* - Untreated waste was not analyzed for this constituent because it was not on the BDAT List at the time of analysis.
NA** - Untreated waste was not analyzed for this constituent due to extreme unlikelihood that it would be present.
ND - Constituent was not detected in the untreated waste.
ND* - Believe that constituent was not detected in the untreated waste.

Table 5-1 (Continued)

BDAT LIST CONSTITUENTS DETECTED IN UNTREATED K048-K052 WASTES

Semivolatiles (Cont.)	K048	K049	K050	K051	K052
87. o-Dichlorobenzene	ND	ND	ND*	ND	ND
88. p-Dichlorobenzene	ND	ND	ND*	ND	ND
89. 3,3'-Dichlorobenzidine	ND	ND	ND*	ND	ND
90. 2,4-Dichlorophenol	ND	ND	ND*	ND	ND
91. 2,6-Dichlorophenol	ND	A	ND*	ND	A
92. Diethyl phthalate	ND	ND	ND*	ND	ND
93. 3,3'-Dimethoxybenzidine	ND	ND	ND*	ND	ND
94. p-Dimethylaminoazobenzene	ND	ND	ND*	ND	ND
95. 3,3'-Dimethylbenzidine	A	A	ND*	A	A
96. 2,4-Dimethylphenol	ND	D	ND*	ND	D
97. Dimethyl phthalate	ND	ND	ND*	ND	ND
98. Di-n-butyl phthalate	D	ND	ND*	D	ND
99. 1,4-Dinitrobenzene	ND	ND	ND*	ND	ND
100. 4,6-Dinitro-o-cresol	ND	ND	ND*	ND	ND
101. 2,4-Dinitrophenol	ND	ND	ND*	ND	ND
102. 2,4-Dinitrotoluene	ND	ND	ND*	ND	ND
103. 2,6-Dinitrotoluene	ND	ND	ND*	ND	ND
104. Di-n-octyl phthalate	ND	ND	ND*	ND	ND
105. Di-n-propylnitrosamine	ND	ND	ND*	ND	ND
106. Diphenylamine/ diphenylnitrosamine	ND	ND	ND*	ND	ND
219. Diphenylnitrosamine	NA*	NA*	NA	NA*	NA*
107. 1,2-Diphenylhydrazine	ND	ND	ND*	ND	ND
108. Fluoranthene	ND	ND	ND*	ND	ND
109. Fluorene	D	ND	ND*	D	ND
110. Hexachlorobenzene	ND	ND	ND*	ND	ND
111. Hexachlorobutadiene	ND	ND	ND*	ND	ND
112. Hexachlorocyclopentadiene	ND	ND	ND*	ND	ND
113. Hexachloroethane	ND	ND	ND*	ND	ND
114. Hexachlorophene	A	A	ND*	A	A
115. Hexachloropropene	ND	A	ND*	ND	A
116. Indeno(1,2,3-cd)pyrene	ND	ND	ND*	ND	ND
117. Isosafrole	A	ND	ND*	A	ND

A - Constituent was analyzed but a detection limit or analytical result was not obtained due to analytical problems.
D - Constituent was detected in the untreated waste.
NA - Believe that untreated waste was not analyzed for this constituent.
NA* - Untreated waste was not analyzed for this constituent because it was not on the BDAT List at the time of analysis.
NA** - Untreated waste was not analyzed for this constituent due to extreme unlikelihood that it would be present.
ND - Constituent was not detected in the untreated waste.
ND* - Believe that constituent was not detected in the untreated waste.

Table 5-1 (Continued)

BDAT LIST CONSTITUENTS DETECTED IN UNTREATED K048-K052 WASTES

Semivolatiles (Cont.)		K048	K049	K050	K051	K052
118.	Methapyrilene	A	A	ND*	A	A
119.	3-Methylcholanthrene	A	ND	ND*	A	ND
120.	4,4'-Methylenebis (2-chloroaniline)	A	ND	ND*	A	ND
36.	Methyl methanesulfonate	ND	A	ND*	ND	A
121.	Naphthalene	D	D	ND*	D	D
122.	1,4-Naphthoquinone	ND	A	ND*	ND	A
123.	1-Naphthylamine	ND	ND	ND*	ND	ND
124.	2-Naphthylamine	ND	ND	ND*	ND	ND
125.	p-Nitroaniline	ND	ND	ND*	ND	ND
126.	Nitrobenzene	ND	ND	ND*	ND	ND
127.	4-Nitrophenol	ND	ND	ND*	ND	ND
128.	N-Nitrosodi-n-butylamine	ND	A	ND*	ND	A
129.	N-Nitrosodiethylamine	ND	A	ND*	ND	A
130.	N-Nitrosodimethylamine	ND	ND	ND*	ND	ND
131.	N-Nitrosomethylethylamine	A	ND	ND*	A	ND
132.	N-Nitrosomorpholine	ND	ND	ND*	ND	ND
133.	N-Nitrosopiperidine	ND	ND	ND*	ND	ND
134.	n-Nitrosopyrrolidine	ND	ND	ND*	ND	ND
135.	5-Nitro-o-toluidine	A	ND	ND*	A	ND
136.	Pentachlorobenzene	ND	A	ND*	ND	A
137.	Pentachloroethane	ND	A	ND*	ND	A
138.	Pnetachloronitrobenzene	ND	ND	ND*	ND	ND
139.	Pentachlorophenol	ND	ND	ND*	ND	ND
140.	Phenacetin	ND	ND	ND*	ND	ND
141.	Phenanthrene	D	D	ND*	D	D
142.	Phenol	D	D	D	D	D
220.	Phthalic anhydride	NA*	NA*	NA	NA*	NA*
143.	2-Picoline	ND	ND	ND*	ND	ND
144.	Pronamide	ND	A	ND*	ND	A
145.	Pyrene	D	D	ND*	D	ND
146.	Resorcinol	ND	A	ND*	ND	A
147.	Safrole	A	ND	ND*	A	ND

A - Constituent was analyzed but a detection limit or analytical result was not obtained due to analytical problems.
D - Constituent was detected in the untreated waste.
NA - Believe that untreated waste was not analyzed for this constituent.
NA* - Untreated waste was not analyzed for this constituent because it was not on the BDAT List at the time of analysis.
NA** - Untreated waste was not analyzed for this constituent due to extreme unlikelihood that it would be present.
ND - Constituent was not detected in the untreated waste.
ND* - Believe that constituent was not detected in the untreated waste.

Table 5-1 (Continued)

BDAT LIST CONSTITUENTS DETECTED IN UNTREATED K048-K052 WASTES

	K048	K049	K050	K051	K052
Semivolatiles (Cont.)					
148. 1,2,4,5-Tetrachlorobenzene	ND	ND	ND*	ND	ND
149. 2,3,4,6-Tetrachlorophenol	ND	ND	ND*	ND	ND
150. 1,2,4-Trichlorobenzene	ND	ND	ND*	ND	ND
151. 2,4,5-Trichlorophenol	ND	ND	ND*	ND	ND
152. 2,4,6-Trichlorophenol	ND	ND	ND*	ND	ND
153. Tris(2,3-dibromopropyl) phosphate	ND	ND	ND*	ND	ND
Metals					
154. Antimony	D	D	ND*	D	D
155. Arsenic	D	D	D	D	D
156. Barium	D	D	ND*	D	D
157. Berryllium	D	D	D	D	D
158. Cadmium	D	D	D	D	D
159. Chromium (total)	D	D	D	D	D
221. Chromium (hexavalent)	ND	D	D	D	NA*
160. Copper	D	D	D	D	D
161. Lead	D	D	D	D	D
162. Mercury	D	D	D	D	D
163. Nickel	D	D	D	D	D
164. Selenium	D	D	D	D	D
165. Silver	D	D	D	D	D
166. Thallium	ND	ND	ND*	ND	ND
167. Vanadium	D	D	D	D	D
168. Zinc	D	D	D	D	D
Inorganics					
169. Cyanide	D	D	D	D	D
170. Fluoride	ND	D	ND*	ND	D
171. Sulfide	D	D	ND*	D	D

A - Constituent was analyzed but a detection limit or analytical result was not obtained due to analytical problems.
D - Constituent was detected in the untreated waste.
NA - Believe that untreated waste was not analyzed for this constituent.
NA* - Untreated waste was not analyzed for this constituent because it was not on the BDAT List at the time of analysis.
NA** - Untreated waste was not analyzed for this constituent due to extreme unlikelihood that it would be present.
ND - Constituent was not detected in the untreated waste.
ND* - Believe that constituent was not detected in the untreated waste.

Table 5-1 (Continued)

BDAT LIST CONSTITUENTS DETECTED IN UNTREATED K048-K052 WASTES

	K048	K049	K050	K051	K052
Organochlorine Pesticides					
172. Aldrin	NA**	NA**	NA	NA**	NA**
173. alpha-BHC	NA**	NA**	NA	NA**	NA**
174. beta-BHC	NA**	NA**	NA	NA**	NA**
175. delta-BHC	NA**	NA**	NA	NA**	NA**
176. gamma-BHC	NA**	NA**	NA	NA**	NA**
177. Chlordane	NA**	NA**	NA	NA**	NA**
178. DDD	NA**	NA**	NA	NA**	NA**
179. DDE	NA**	NA**	NA	NA**	NA**
180. DDT	NA**	NA**	NA	NA**	NA**
181. Dieldrin	NA**	NA**	NA	NA**	NA**
182. Endosulfan I	NA**	NA**	NA	NA**	NA**
183. Endosulfan II	NA**	NA**	NA	NA**	NA**
184. Endrin	NA**	NA**	NA	NA**	NA**
185. Endrin aldehyde	NA**	NA**	NA	NA**	NA**
186. Heptachlor	NA**	NA**	NA	NA**	NA**
187. Heptachlor epoxide	NA**	NA**	NA	NA**	NA**
188. Isodrin	NA**	NA**	NA	NA**	NA**
189. Kepone	NA**	NA**	NA	NA**	NA**
190. Methoxychlor	NA**	NA**	NA	NA**	NA**
191. Toxaphene	NA**	NA**	NA	NA**	NA**
Phenoxyacetic Acid Herbicides					
192. 2,4-Dichlorophenoxyacetic acid	NA**	NA**	NA	NA**	NA**
193. Silvex	NA**	NA**	NA	NA**	NA**
194. 2,4,5-T	NA**	NA**	NA	NA**	NA**
Organophosphorus Insecticides					
195. Disulfoton	NA**	NA**	NA	NA**	NA**
196. Famphur	NA**	NA**	NA	NA**	NA**

A - Constituent was analyzed but a detection limit or analytical result was not obtained due to analytical problems.
D - Constituent was detected in the untreated waste.
NA - Believe that untreated waste was not analyzed for this constituent.
NA* - Untreated waste was not analyzed for this constituent because it was not on the BDAT List at the time of analysis.
NA** - Untreated waste was not analyzed for this constituent due to extreme unlikelihood that it would be present.
ND - Constituent was not detected in the untreated waste.
ND* - Believe that constituent was not detected in the untreated waste.

Table 5-1 (Continued)

BDAT LIST CONSTITUENTS DETECTED IN UNTREATED K048-K052 WASTES

	K048	K049	K050	K051	K052
Organophosphorus Insecticides (Cont.)					
197. Methyl parathion	NA**	NA**	NA	NA**	NA**
198. Parathion	NA**	NA**	NA	NA**	NA**
199. Phorate	NA**	NA**	NA	NA**	NA**
PCBs					
200. Aroclor 1016	NA**	NA**	NA	NA**	NA**
201. Aroclor 1221	NA**	NA**	NA	NA**	NA**
202. Aroclor 1232	NA**	NA**	NA	NA**	NA**
203. Aroclor 1242	NA**	NA**	NA	NA**	NA**
204. Aroclor 1248	NA**	NA**	NA	NA**	NA**
205. Aroclor 1254	NA**	NA**	NA	NA**	NA**
206. Aroclor 1260	NA**	NA**	NA	NA**	NA**
Dioxins and Furans					
207. Hexachlorodibenzo-p-dioxins	NA**	NA**	NA	NA**	NA**
208. Hexachlorodibenzofuran	NA**	NA**	NA	NA**	NA**
209. Pentachlorodibenzo-p-dioxins	NA**	NA**	NA	NA**	NA**
210. Pentachlorodibenzofuran	NA**	NA**	NA	NA**	NA**
211. Tetrachlorodibenzo-p-dioxins	NA**	NA**	NA	NA**	NA**
212. Tetrachlorodibenzofuran	NA**	NA**	NA	NA**	NA**
213. 2,3,7,8-Tetrachlorodibenzo-p-dioxin	NA**	NA**	NA	NA**	NA**

A - Constituent was analyzed but a detection limit or analytical result was not obtained due to analytical problems.
D - Constituent was detected in the untreated waste.
NA - Believe that untreated waste was not analyzed for this constituent.
NA* - Untreated waste was not analyzed for this constituent because it was not on the BDAT List at the time of analysis.
NA** - Untreated waste was not analyzed for this constituent due to extreme unlikelihood that it would be present.
ND - Constituent was not detected in the untreated waste.
ND* - Believe that constituent was not detected in the untreated waste.

Table 5-2

BDAT LIST CONSTITUENTS CONSIDERED FOR REGULATION*

NONWASTEWATER

K048		K049		K050		K051		K052	
226.	Ethylbenzene	4.	Benzene	62.	Benzo(a)pyrene	226.	Ethylbenzene	4.	Benzene
43.	Toluene Xylene**	8.	Carbon disulfide	142.	Phenol	43.	Toluene Xylene**	226.	Ethylbenzene
62.	Benzo(a)pyrene	226.	Ethylbenzene	155.	Arsenic	52.	Acenaphthene	43.	Toluene Xylene**
70.	Bis(2-ethylhexyl)phthalate	43.	Toluene Xylene**	159.	Chromium(total)	59.	Benz(a)anthracene	62.	Benzo(a)pyrene
80.	Chrysene	57.	Anthracene	160.	Copper	62.	Benzo(a)pyrene	81.	ortho-Cresol
98.	Di-n-butyl phthalate	62.	Benzo(a)pyrene	163.	Nickel	70.	Bis(2-ethylhexyl)phthalate	82.	para-Cresol
109.	Fluorene	70.	Bis(2-ethylhexyl)phthalate	164.	Selenium	80.	Chrysene	96.	2,4-Dimethylphenol
121.	Naphthalene	80.	Chrysene	167.	Vanadium	98.	Di-n-butyl phthalate	121.	Naphthalene
141.	Phenanthrene	96.	2,4-Dimethylphenol	168.	Zinc	109.	Fluorene	141.	Phenanthrene
142.	Phenol	121.	Naphthalene	169.	Cyanide	121.	Naphthalene	142.	Phenol
145.	Pyrene	141.	Phenanthrene			141.	Phenanthrene	155.	Arsenic
155.	Arsenic	142.	Phenol			142.	Phenol	159.	Chromium(total)
159.	Chromium(total)	145.	Pyrene			145.	Pyrene	160.	Copper
160.	Copper	155.	Arsenic			155.	Arsenic	163.	Nickel
163.	Nickel	159.	Chromium(total)			159.	Chromium(total)	164.	Selenium
164.	Selenium	160.	Copper			160.	Copper	167.	Vanadium
167.	Vanadium	163.	Nickel			163.	Nickel	168.	Zinc
168.	Zinc	164.	Selenium			164.	Selenium	169.	Cyanide
169.	Cyanide	167.	Vanadium			167.	Vanadium		
		168.	Zinc			168.	Zinc		
		169.	Cyanide			169.	Cyanide		

*All constituents on this list were detected in the untreated K048-K052 wastes and were either selected for regulation (as shown in Table 5-3) or are believed to be controlled by regulation of another constituent.

**Includes BDAT List constituents 1,2-xylene (#215), 1,3-xylene (#216), and 1,4-xylene (#217).

Table 5-2 (Continued)

BDAT LIST CONSTITUENTS CONSIDERED FOR REGULATION*

WASTEWATER

K048		K049		K050		K051		K052	
43.	Toluene	4.	Benzene	142.	Phenol	226.	Ethylbenzene	4.	Benzene
226.	Ethylbenzene	8.	Carbon disulfide	155.	Arsenic	43.	Toluene	226.	Ethylbenzene
	Xylene	226.	Ethylbenzene	157.	Beryllium		Xylene	43.	Toluene
109.	Fluorene	43.	Toluene	158.	Cadmium	52.	Acenaphthene		Xylene
121.	Naphthalene		Xylene	159.	Chromium(total)	109.	Fluorene	81.	ortho-Cresol
141.	Phenanthrene	57.	Anthracene	221.	Chromium (hexavalant)	121.	Naphthalene	82.	para-Cresol
142.	Phenol	96.	2,4-Dimethylphenol	160.	Copper	141.	Phenanthrene	96.	2,4-Dimethylphenol
154.	Antimony	121.	Naphthalene	161.	Lead	142.	Phenol	121.	Naphthalene
155.	Arsenic	141.	Phenanthrene	162.	Mercury	154.	Antimony	141.	Phenanthrene
157.	Beryllium	142.	Phenol	163.	Nickel	155.	Arsenic	142.	Phenol
158.	Cadmium	155.	Arsenic	164.	Selenium	157.	Beryllium	154.	Antimony
159.	Chromium(total)	157.	Beryllium	165.	Silver	158.	Cadmium	155.	Arsenic
160.	Copper	158.	Cadmium	167.	Vanadium	159.	Chromium(total)	157.	Beryllium
161.	Lead	159.	Chromium(total)	168.	Zinc	221.	Chromium (hexavalent)	158.	Cadmium
162.	Mercury	221.	Chromium(hexavalent)			160.	Copper	159.	Chromium(total)
163.	Nickel	160.	Copper			161.	Lead	160.	Copper
164.	Selenium	161.	Lead			162.	Mercury	161.	Lead
165.	Silver	162.	Mercury			163.	Nickel	162.	Mercury
167.	Vanadium	163.	Nickel			164.	Selenium	163.	Nickel
168.	Zinc	164.	Selenium			165.	Silver	164.	Selenium
		165.	Silver			167.	Vanadium	165.	Silver
		167.	Vanadium			168.	Zinc	167.	Vanadium
		168.	Zinc					168.	Zinc
		170.	Fluoride					170.	Fluoride

*All constituents on this list were detected in the untreated K048-K052 wastes and were either selected for regulation (as shown in Table 5-3) or are believed to be controlled by regulation of another constituent.

**Includes BDAT List constituents 1,2-xylene (#215), 1,3-xylene (#216), and 1,4-xylene (#217).

Table 5-3

BDAT LIST CONSTITUENTS SELECTED FOR REGULATION

NONWASTEWATER

K048		K049		K050		K051		K052	
43.	Toluene Xylene*	4.	Benzene	62.	Benzo(a)pyrene	43.	Toluene Xylene*	43.	Toluene Xylene*
70.	Bis(2-ethyl-hexyl)phthalate	43.	Toluene Xylene*	142.	Phenol	80.	Chrysene	81.	ortho-Cresol
80.	Chrysene	80.	Chrysene	155.	Arsenic	98.	Di-n-butyl phthalate	82.	para-Cresol
98.	Di-n-butyl phthalate	121.	Naphthalene	159.	Chromium(total)	121.	Naphthalene	121.	Naphthalene
121.	Naphthalene	141.	Phenanthrene	160.	Copper	141.	Phenanthrene	141.	Phenanthrene
141.	Phenanthrene	142.	Phenol	163.	Nickel	142.	Phenol	142.	Phenol
142.	Phenol	145.	Pyrene	164.	Selenium	145.	Pyrene	155.	Arsenic
155.	Arsenic	155.	Arsenic	167.	Vanadium	155.	Arsenic	159.	Chromium(total)
159.	Chromium(total)	159.	Chromium(total)	168.	Zinc	159.	Chromium(total)	160.	Copper
160.	Copper	160.	Copper	169.	Cyanide	160.	Copper	163.	Nickel
163.	Nickel	163.	Nickel			163.	Nickel	164.	Selenium
164.	Selenium	164.	Selenium			164.	Selenium	167.	Vanadium
167.	Vanadium	167.	Vanadium			167.	Vanadium	168.	Zinc
168.	Zinc	168.	Zinc			168.	Zinc	169.	Cyanide
169.	Cyanide	169.	Cyanide			169.	Cyanide		

*Includes BDAT List constituents 1,2-xylene (#215), 1,3-xylene (#216), and 1,4-xylene (#217).

Table 5-3 (Continued)

BDAT LIST CONSTITUENTS SELECTED FOR REGULATION

WASTEWATER

K048		K049		K050		K051		K052	
43.	Toluene	4.	Benzene	142.	Phenol	43.	Toluene	4.	Benzene
	Xylene*	43.	Toluene	159.	Chromium(total)		Xylene*		Xylene*
109.	Fluorene		Xylene*	161.	Lead	52.	Acenaphthene	81.	ortho-Cresol
121.	Naphthalene	57.	Anthracene	168.	Zinc	109.	Fluorene	82.	para-Cresol
141.	Phenanthrene	96.	2,4-Dimethyl-			121.	Naphthalene	96.	2,4-Dimethyl-
142.	Phenol		phenol			141.	Phenanthrene		phenol
159.	Chromium(total)	121.	Naphthalene			142.	Phenol	121.	Naphthalene
161.	Lead	141.	Phenanthrene			159.	Chromium(total)	141.	Phenanthrene
168.	Zinc	142.	Phenol			161.	Lead	142.	Phenol
		159.	Chromium(total)			168.	Zinc	159.	Chromium(total)
		161.	Lead					161.	Lead
		168.	Zinc					168.	Zinc

*Includes BDAT List constituents 1,2-xylene (#215), 1,3-xylene (#216), and 1,4-xylene (#217).

6.0 CALCULATION OF TREATMENT STANDARDS

In Section 4.0 of this document, the best demonstrated and available technologies for treatment of the petroleum refinery waste treatability group (K048-K052) were chosen based on available performance data. In Section 5.0, the regulated constituents were selected to ensure effective treatment of the wastes. The purpose of Section 6.0 is to calculate treatment standards for the proposed regulated constituents using the available treatment data from the BDAT treatment technologies. Included in this section is a step-by-step discussion of the calculation of treatment standards for the nonwastewater and wastewater forms of K048-K052 wastes.

BDAT treatment standards for K048-K052 nonwastewater are proposed based on performance data from a treatment train that consisted of full scale fluidized bed incineration followed by ash stabilization. Ash stabilization was achieved using lime and fly ash as stabilization agents. Testing was performed on representative samples of nonwastewater K048 and K051. The treatment performance data were than transferred to develop standards for nonwastewater K049, K050, and K052.

BDAT organic constituent treatment standards for K048-K052 wastewaters are proposed based on a transfer of treatment performance data for the scrubber water residual from the incineration of K019 nonwastewater (K019 is listed as heavy ends from the distillation of ethylene dichloride in ethylene dichloride production.) Standards for inorganic constituents were developed

based on treatment of K062 and metal-bearing characteristic wastes from chromium reduction, lime and sulfide precipitation and vacuum filtration. Treatment performance data were transferred on a constituent basis from either the same constituent or, in the case of organic constituents, from constituents judged to be similar in physical and chemical properties.

Incineration generally results in the generation of two treatment residuals: ash (a nonwastewater form of K048-K052) and combustion gas scrubber water (a wastewater form of K048-K052). The best measure of performance for a destruction technology, such as incineration, is the total amount of constituent remaining after treatment. Therefore, proposed BDAT treatment standards for organic constituents were calculated based on total constituent concentration data. Lime and fly ash stabilization reduces the leachability of metals in the waste. The best measure of performance for stabilization technologies is the analyses of the toxicity characteristic leaching procedure (TCLP) extract. Therefore, proposed BDAT treatment standards for metals in nonwastewater forms of K048-K052 wastes were calculated based on TCLP data. Chromium reduction followed by lime and sulfide precipitation and vacuum filtration is a removal technology for metals in the wastewater residual. The best measure of performance for a removal technology is the total amount of constituent remaining after treatment. Therefore, proposed BDAT treatment standards for metals in wastewater forms of K048-K052 were calculated based on total constituent concentration data.

6.1 Calculation of Treatment Standards for Nonwastewater Forms of K048-K052

K048 and K051 Wastes

Six data sets (untreated and treated data points) for fluidized bed incineration and three data sets for lime and fly ash stabilization were used to calculate the nonwastewater treatment standards for K048 and K051 wastes. Table 6-1 presents the six values of total concentration treated waste data (organics) for fluidized bed incineration and Table 6-2 presents the three values of TCLP treated waste data (metals) for lime and fly ash stabilization. Values are presented for all constituents proposed for regulation in K048-K052 wastes for which treatment data are available from treatment of K048 and K051 wastes at plant A. The concentration data presented in Tables 6-1 and 6-2 have been corrected to account for analytical recovery as described in Section 4.0.

Nonwastewater treatment standards were calculated for each regulated constituent for K048 and K051 as shown in Tables 6-3 and 6-6. The following three steps were used to calculate the treatment standards: (1) The arithmetic average of the corrected treatment values for each regulated constituent was calculated using the six data points presented in Table 6-1 for organic constituents and the three data points presented in Table 6-2 for metal constituents. (2) Using these same data, a variability factor was calculated that represents the variability inherent in performance of treatment systems,

collection of treated samples, and analysis of samples. Where concentrations in the treated waste were reported as less than or equal to the detection limit for all the data points in the data set, variability is still expected since the actual concentration could range from zero to the detection limit. In these cases, the Agency assumed a lognormal distribution of data points between the detection limit and a value 1/10 of the detection limit and calculated a variability factor of 2.8. (3) The treatment standard for each regulated constituent was calculated by multiplying the arithmetic average of the corrected treatment values by the variability factor. The analytical methods for analysis of each regulated constituent for K048 and K051 are included in Tables 6-3 and 6-6. A detailed discussion of these analytical methods is presented in Appendix D.

One exception from the methodology for calculation of treatment standards for K048 and K051 wastes presented above is phenol. Phenol was selected for regulation for K048 and K051 wastes in Section 5.0 based on available waste characterization data from a variety of sources; however, phenol was not detected in the untreated K048 and K051 wastes treated at plant A. The Agency determined that it would be inappropriate to base treatment standards on not detected values in the treatment residual if the constituent was not detected in the untreated waste. Therefore, data were transferred to phenol from another organic constituent detected in the untreated K048 and K051 wastes based on the boiling points of those constituents. (Boiling point is a waste characteristic that affects the performance of fluidized bed incineration as discussed in detail in Section 3.4. Appendix I presents

information on waste characteristics that affect performance). The constituent with the same or the closest higher boiling point for which the Agency had treatment data from K048 and K051 wastes at plant A was selected for transfer of data. The treatment standard for phenol (bp 182°C) was based on data transferred from treatment of naphthalene (bp 218°C); the Agency expects that phenol can be treated to concentration levels as low or lower than naphthalene.

K049, K050, and K052 Wastes

Treatment performance data are not available for K049, K050, and K052 wastes. Therefore, the Agency is transferring data from treatment of K048 and K051 at Plant A to K049, K050, and K052. The calculation of treatment standards for K049, K050, and K052 are presented in Tables 6-4, 6-5, and 6-7, respectively. The transfer of such treatment data is supported by the determination that K048-K052 wastes represent a single waste treatability group as discussed in Section 2.0. The determination of the waste treatability group is based on the similarity of the composition of the untreated wastes and the fact that all of these wastes are generated by petroleum refineries.

Where treatment data are available from treatment of K048 and K051 for a proposed regulated constituent in K049, K050, and K052 wastes, the data were transferred to that constituent to calculate the treatment standard for each waste code. Treatment performance data were transferred in this way for

all regulated metals and inorganic constituents and for most regulated organic constituents in K049, K050, and K052 wastes.

Treatment performance data were not available from treatment of K048 and K051 at plant A for some organic constituents proposed for regulation in K049, K050, and K052. This is because the constituents proposed for regulation for each waste code are based on available waste characterization data from a variety of sources. Performance data used to calculate treatment standards are based on a performance test for K048 and K051 waste generated at plant A. Therefore, some regulated constituents for K049, K050, and K052 waste codes may not have been detected in the K048 and K051 wastes treated at plant A. The Agency believes that it is inappropriate to base treatment standards on not detected values in the treatment residual from K048 and K051 if the constituent was not detected in the untreated waste. In such cases, data were transferred to that organic constituent from another organic constituent detected in the untreated K048 and K051 wastes based on the boiling points of those constituents. (Boiling point is a waste characteristic that affects the performance of the fluidized bed incineration as discussed in Section 3.4. Appendix I presents information on waste characteristics that affect performance.) The constituent with the same or the closest higher boiling point for which the Agency had treatment data from K048 and K051 wastes at plant A was selected for transfer of data. Cases where such a transfer of data occurred are summarized below and are noted on Tables 6-4, 6-5, and 6-7, which show the calculations of the treatment standards for K049, K050, and K052 waste, respectively.

4. Benzene (K049). The treatment standard for benzene (bp 80°C) for K049 waste is based on data transferred from treatment of toluene (bp 110°C). Based on the discussion of waste characteristics affecting treatment performance of fluidized bed incineration in Section 3.4, the Agency expects that benzene can be treated to concentration levels as low or lower than toluene.

81. ortho-Cresol (K052) and 82. para-Cresol (K052). The treatment standards for ortho-cresol (bp 192°) and para-cresol (bp 202°C) for K052 waste are based on data transferred from treatment of naphthalene (bp 218°C). Based on the discussion of waste characteristics affecting treatment performance of fluidized bed incineration in Section 3.4, the Agency expects that ortho-cresol and para-cresol can be treated to concentration levels as low or lower than naphthalene.

142. Phenol (K049, K050, K052). The treatment standard for phenol (bp 182°C) for K049, K050, and K052 wastes is based on data transferred from treatment of naphthalene (bp 218°C). Based on the discussion of waste characteristics affecting treatment performance of fluidized bed incineration in Section 3.4, the Agency expects that phenol can be treated to concentration levels as low or lower than naphthalene.

6.2 Calculation of Treatment Standards for Wastewater Forms of K048-K052

Neither characterization data for wastewater forms of K048-K052 nor treatment performance data for wastewater forms of K048-K052 were available to the Agency. As described in Section 5.0, constituents were selected for regulation in wastewater forms of K048-K052 based on their presence in the untreated nonwastewater forms of K048-K052 wastes. This is based on the fact that during incineration of K048-K052 nonwastewaters, uncombusted constituents may be stripped from the incinerator off-gases and collected in the scrubber water.

The Agency has no treatment performance data for K048-K052 wastewaters; therefore, data were transferred from other sources. Treatment standards for the organic constituents were based on treatment performance data transferred from wastewater (scrubber water) generated by the rotary kiln incineration of K019 waste (heavy ends from the distillation of ethylene dichloride in ethylene dichloride production). Treatment standards for metal constituents were based on treatment data transferred from wastewater treatment data (chromium reduction followed by lime and sulfide precipitation and vacuum filtration) available to the Agency for K062 and other metal-bearing characteristic wastes (Reference 27). The calculations of wastewater treatment standards for K048-K052 wastewaters are presented in Tables 6-8 through 6-12 and are described in more detail below.

Organic Constituents. For organic constituents selected for regulation in K048-K052 wastewaters that are also selected for regulation in K019

wastewater (such as naphthalene), the treatment data for that constituent are transferred from K019 wastewater to K048-K052 wastewaters. For organic constituents selected for regulation in K048-K052 wastewaters that are not selected for regulation K019 wastewater, data were transferred from a K019 wastewater constituent based on similarities in bond dissociation energy (BDE). The bond dissociation energies are presented for each constituent in Appendix I. (Bond dissociation energy is a waste characteristic affecting the performance of incineration as discussed in detail in Section 3.4). The constituent with the same or the closest higher bond dissociation energy for which the Agency had treatment data from K019 scrubber water was selected for transfer of data. Cases where such a transfer of data occurred are summarized below and are noted on Tables 6-8 through 6-12 which show the calculations of the treatment standards for each waste.

4. Benzene (K049 and K052). The treatment standard for benzene (BDE 1320 kcal/mole) for K049 and K052 wastes is based on data transferred from treatment of 1,2,4-trichlorobenzene (BDE 1320 kcal/mole). Based on the discussion of waste characteristics affecting treatment performance of fluidized bed incineration in Section 3.4, the Agency expects that benzene can be treated to concentration levels as low or lower than 1,2,4-trichlorobenzene.

43. Toluene (K048, K049, K051). The treatment standard for toluene (BDE 1235 kcal/mole) for K048, K049, and K051 wastes is based on data transferred from treatment of bis(2-chloroethyl)ether (BDE 1290 kcal/mole). Based on the discussion of waste characteristics affecting treatment performance of fluidized bed incineration in Section 3.4, the Agency expects that toluene can

be treated to concentration levels as low or lower than bis(2-chloroethyl)-ether.

215-217. Xylene (K048, K049, K051, K052). The treatment standard for xylene (BDE 1220 kcal/mole) for K048, K049, K051, and K052 wastes is based on data transferred from treatment of bis(2-chloroethyl)ether (BDE 1290 kcal/mole). Based on the discussion of waste characteristics affecting treatment performance of fluidized bed incineration in Section 3.4, the Agency expects that xylene can be treated to concentration levels as low or lower than bis(2-chloroethyl) ether.

52. Acenaphthene (K051). The treatment standard for acenaphthene (BDE 2400 kcal/mole) for K051 waste is based on data transferred from treatment of fluorene (BDE 2700 kcal/mole). Based on the discussion of waste characteristics affecting performance of fluidized bed incineration in Section 3.4, the Agency expects that acenaphthene can be treated to concentration levels as low or lower than fluorene.

57. Anthracene (K049). The treatment standard for anthracene (BDE 2870 kcal/mole) for K049 waste is based on data transferred from treatment of phenanthrene (BDE 2900 kcal/mole). Based on the discussion of waste characteristics affecting treatment performance of fluidized bed incineration in Section 3.4, the Agency expects that anthracene can be treated to concentration levels as low or lower than phenanthrene.

81. ortho-Cresol (K052). The treatment standard for ortho-cresol (BDE 1405 kcal/mole) for K052 waste is based on data transferred from treatment of naphthalene (BDE 2095 kcal/mole). Based on the discussion of waste characteristics affecting treatment performance of fluidized bed incineration in Section 3.4, the Agency expects that ortho-cresol can be treated to concentration levels as low or lower than naphthalene.

82. para-Cresol (K052). The treatment standard for para-cresol (BDE 1405 kcal/mole) for K052 waste is based on data transferred from treatment of naphthalene (BDE 2095 kcal/mole). Based on the discussion of waste characteristics affecting treatment performance of fluidized bed incineration in Section 3.4, the Agency expects that para-cresol can be treated to concentration levels as low or lower than naphthalene.

96. 2.4-Dimethylphenol (K049, K052). The treatment standard for 2,4-dimethylphenol (BDE 1390 kcal/mole) for K049 and K052 wastes is based on data transferred from treatment of naphthalene (BDE 2095 kcal/mole). Based on the discussion of waste characteristics affecting treatment performance of fluidized bed incineration in Section 3.4, the Agency expects that 2,4-dimethylphenol can be treated to concentration levels as low or lower than naphthalene.

142. Phenol (K048, K049, K050, K051, K052). The treatment standard for phenol (BDE 1421 kcal/mole) for K048-K052 wastes is based on data transferred from treatment of naphthalene (BDE 2095 kcal/mole). Based on the

discussion of waste characteristics affecting treatment performance of fluidized bed incineration in Section 3.4, the Agency expects that phenol can be treated to concentration levels as low or lower than naphthalene.

Metal Constituents. Treatment data for each metal constituent proposed for regulation in wastewater forms of K048-K052 were transferred from data collected by EPA from one facility treating K062 and metal-bearing characteristic wastes (Reference 27). These wastes were treated using chromium reduction followed by lime and sulfide precipitation and vacuum filtration. As discussed in Section 4.0, the Agency believes that the K062 and metal-bearing characteristic wastes are sufficiently similar to K048-K052 wastewater residuals such that performance data can be transferred.

Treatment data are available from the K062 and metal-bearing characteristic wastes for the proposed regulated metals in K048-K052 wastewaters. Because these treatment data are available, the data for each regulated metal in K048-K052 were transferred from K062 and metal-bearing characteristic wastes to K048-K052.

Table 6-1

CORRECTED TOTAL CONCENTRATION DATA FOR ORGANICS AND INORGANICS IN FLUIDIZED BED INCINERATOR ASH

	Corrected Concentrations in the Treated Waste, ppm					
Data Set:	1	2	3	4	5	6
Constituent						
Volatiles						
43. Toluene	3.75	2.50	2.50	2.50	2.50	2.50
215-217. Xylene (total)	2.60	2.60	2.60	7.53	2.60	2.60
Semivolatiles						
62. Benzo(a)pyrene	0.30	0.30	0.30	0.30	0.30	0.30
70. Bis(2-ethylhexyl)phthalate	1.49	1.49	1.49	1.49	1.49	1.49
80. Chrysene	0.30	0.30	0.30	0.30	0.30	0.30
98. Di-n-butyl phthalate	1.49	1.49	1.49	1.49	1.49	1.49
121. Naphthalene	0.30	0.30	0.30	0.30	0.30	0.30
141. Phenanthrene	0.30	0.30	0.30	0.30	0.30	0.30
145. Pyrene	0.38	0.38	0.38	0.38	0.38	0.38
Inorganics						
169. Cyanide	0.096	0.38	0.096	0.48	0.096	0.48

Table 6-2

CORRECTED TCLP DATA FOR METALS IN
STABILIZED (LIME AND FLY ASH) INCINERATOR ASH

		Corrected TCLP Extracts in the Treated Waste, ppm		
	Data Set	1	2	3
	Constituent			
	Metals			
155.	Arsenic	0.003	0.003	0.004
159.	Chromium (total)	1.47	1.58	1.41
160.	Copper	0.004	0.004	0.008
163.	Nickel	0.026	0.026	0.026
164.	Selenium	0.015	0.019	0.020
167.	Vanadium	0.16	0.16	0.17
168.	Zinc	0.029	0.032	0.076

Table 6-3

CALCULATION OF NONWASTEWATER TREATMENT STANDARDS FOR K048

Regulated Constituent (SW-846 Method Number)**	Untreated K048 at Plant A* Range (ppm)	Arithmetic++ Average of Corrected Treatment Values (ppm)	Constituent From Which Treatment Data Were Transferred	Variability Factor (VF)	Treatment++ Standard (Average x VF) (ppm)
Volatiles (8240) (Total Composition)					
43. Toluene	22-120	2.71	NA	1.45	3.93
215-217. Xylene (total)	<14-120	3.42	NA	2.50	8.54
Semivolatiles (8270) (Total Composition)					
70. Bis(2-ethylhexyl)phthalate	<20-59	1.49	NA	2.8	4.18
80. Chrysene	<20-22	0.30	NA	2.8	0.84
98. Di-n-butyl phthalate	67-190	1.49	NA	2.8	4.18
121. Naphthalene	93-110	0.30	NA	2.8	0.84
141. Phenanthrene	77-86	0.30	NA	2.8	0.84
142. Phenol	93-170+	0.30	Naphthalene	2.8	0.84
Inorganics (9010) (Total Composition)					
169. Cyanide	<0.1-1.0	0.27	NA	5.44	1.48

*Concentration values for the untreated waste have not been corrected for recovery.

**For detailed discussion of the analytical methods upon which these treatment standards are based, see Appendix D.

+Phenol was not detected in the untreated K048 waste; however, in other characterization data, phenol was shown to be present in K048 (see Table 2-4). The range presented is the range of naphthalene in the untreated K048 and K051 waste. Treatment performance data were transferred to phenol from naphthalene.

++The values shown on this table for arithmetic averages and treatment standards have been rounded to show significant figures only.

ND Not detected

NA Not applicable

Table 6-3 (Continued)

CALCULATION OF NONWASTEWATER TREATMENT STANDARDS FOR K048

Regulated Constituent (SW-846 Method Number)**	Unstabilized Ash* Range (ppm)	Arithmetic++ Average of Corrected Treatment Values (ppm)	Constituent From Which Treatment Data Were Transferred	Variability Factor (VF)	Treatment++ Standard (Average x VF) (ppm)
Metals (TCLP)					
155. Arsenic (7060)	0.006-0.018	0.003	NA	1.69	0.006
159. Chromium (total) (6010)	2.64-3.26	1.48	NA	1.14	1.68
160. Copper (6010)	0.023	0.005	NA	2.40	0.013
163. Nickel (6010)	0.027-0.041	0.026	NA	1.79	0.048
164. Selenium (7740)	0.025-0.15	0.018	NA	1.38	0.025
167. Vanadium (6010)	3.24-4.67	0.16	NA	1.09	0.18
168. Zinc (6010)	0.11-0.15	0.046	NA	3.09	0.141

*TCLP extract concentrations for the untreated waste have been corrected for recovery.
**For detailed discussion of the analytical methods upon which these treatment standards are based, see Appendix D.
++The values shown on this table for arithmetic averages and treatment standards have been rounded to show significant figures only.
NA Not applicable

Table 6-4

CALCULATION OF NONWASTEWATER TREATMENT STANDARDS FOR K049

Regulated Constituent (SW-846 Method Number)[1]	Constituent From Which Treatment Data Were Transferred*	Untreated Concentration (ppm)**	Arithmetic++ Average of Corrected Treatment Values (ppm)	Variability Factor (VF)	Treatment++ Standard (Average x VF) (ppm)
Volatiles (8240) (Total Composition)					
4. Benzene	Toluene	22-120	2.71	1.45	3.93
43. Toluene	Toluene	22-120	2.71	1.45	3.93
215-217. Xylene (total)	Xylene	<14-120	3.42	2.50	8.54
Semivolatiles (8270) (Total Composition)					
80. Chrysene	Chrysene	<20-51	0.30	2.8	0.84
121. Naphthalene	Naphthalene	93-170	0.30	2.8	0.84
141. Phenanthrene	Phenanthrene	77-120	0.30	2.8	0.84
142. Phenol	Naphthalene	93-170	0.30	2.8	0.84
145. Pyrene	Pyrene	62-74	0.38	2.8	1.06
Inorganics (9010) (Total Composition)					
169. Cyanide	Cyanide	<0.1-1.4	0.27	5.44	1.48

[1]For detailed discussion of the analytical methods upon which these treatment standards are based, see Appendix D.

*Data were transferred from K048-K051.

**This is the untreated concentration in K048 and K051 of each constituent from which treatment data were transferred.

++The values shown on this table for arithmetic averages and treatment standards have been rounded to show significant figures only.

Table 6-4 (Continued)

CALCULATION OF NONWASTEWATER TREATMENT STANDARDS FOR K049

Regulated Constituent (SW-846 Method Number)[1]	Constituent From Which Treatment Data Were Transferred*	Untreated Concentration**	Arithmetic++ Average of Corrected Treatment Values (ppm)	Variability Factor (VF)	Treatment++ Standard (Average x VF) (ppm)
Metals (TCLP)					
155. Arsenic	Arsenic	0.006-0.018	0.003	1.69	0.006
159. Chromium (total)	Chromium (total)	2.64-3.26	1.48	1.14	1.68
160. Copper	Copper	0.023	0.005	2.40	0.013
163. Nickel	Nickel	0.027-0.041	0.026	1.79	0.048
164. Selenium	Selenium	0.025-0.15	0.018	1.38	0.025
167. Vanadium	Vanadium	3.24-4.67	0.16	1.09	0.18
168. Zinc	Zinc	0.11-0.15	0.046	3.09	0.141

[1]For detailed discussion of the analytical methods upon which these treatment standards are based, see Appendix D.

*Data were transferred from K048-K051.

**This is the untreated concentration in K048 and K051 of each constituent from which treatment data were transferred.

++The values shown on this table for arithmetic averages and treatment standards have been rounded to show significant figures only.

Table 6-5

CALCULATION OF NONWASTEWATER TREATMENT STANDARDS FOR K050

Regulated Constituent (SW-846 Method Number)[1]	Constituent From Which Treatment Data Were Transferred*	Untreated Concentration (ppm)**	Arithmetic++ Average of Corrected Treatment Values (ppm)	Variability Factor (VF)	Treatment++ Standard (Average x VF) (ppm)
Volatiles (8240) (Total Composition)					
(No volatile constituents are regulated for K050 wastes)					
Semivolatiles (8270) (Total Composition)					
62. Benzo(a)pyrene	Benzo(a)pyrene	0.002-45	0.30	2.8	0.84
142. Phenol	Naphthalene	93-170	0.30	2.8	0.84
Inorganics (9010) (Total Composition)					
169. Cyanide	Cyanide	<0.1-1.4	0.27	5.44	1.48

[1]For detailed discussion of the analytical methods upon which these treatment standards are based, see Appendix D.

*Data were transferred from K048 and K051.

**This is the untreated concentration in K048 and K051 of each constituent from which treatment data were transferred.

++The values shown on this table for arithmetic averages and treatment standards have been rounded to show significant figures only.

Table 6-5 (Continued)

CALCULATION OF NONWASTEWATER TREATMENT STANDARDS FOR K050

Regulated Constituent (SW-846 Method Number)[1]	Constituent From Which Treatment Data Were Transferred*	Untreated Concentration (ppm)**	Arithmetic++ Average of Corrected Treatment Values (ppm)	Variability Factor (VF)	Treatment++ Standard (Average x VF) (ppm)
Metals (TCLP)					
155. Arsenic	Arsenic	0.006-0.018	0.003	1.69	0.006
159. Chromium (total)	Chromium (total)	2.64-3.26	1.48	1.14	1.68
160. Copper	Copper	0.023	0.005	2.40	0.013
163. Nickel	Nickel	0.027-0.041	0.026	1.79	0.048
164. Selenium	Selenium	0.025-0.15	0.018	1.38	0.025
167. Vanadium	Vanadium	3.24-4.67	0.16	1.09	0.18
168. Zinc	Zinc	0.11-0.15	0.046	3.09	0.141

[1]For detailed discussion of the analytical methods upon which these treatment standards are based, see Appendix D.

*Data were transferred from K048 and K051.

**This is the untreated concentration in K048 and K051 of each constituent from which treatment data were transferred.

++The values shown on this table for arithmetic averages and treatment standards have been rounded to show significant figures only.

Table 6-6

CALCULATION OF NONWASTEWATER TREATMENT STANDARDS FOR K051

Regulated Constituent (SW-846 Method Number)**	Untreated K051 at Plant A* Range (ppm)	Arithmetic++ Average of Corrected Treatment Values (ppm)	Constituent From Which Treatment Data Were Transferred	Variability Factor (VF)	Treatment++ Standard (Average x VF) (ppm)
Volatiles (8240) (Total Composition)					
43. Toluene	33-71	2.71	NA	1.45	3.93
215-217. Xylene (total)	71-83	3.42	NA	2.50	8.54
Semivolatiles (8270) (Total Composition)					
80. Chrysene	45-51	0.30	NA	2.8	0.84
98. Di-n-butyl phthalate	43-230	1.49	NA	2.8	4.18
121. Naphthalene	150-170	0.30	NA	2.8	0.84
141. Phenanthrene	110-120	0.30	NA	2.8	0.84
142. Phenol	93-170+	0.30	Naphthalene	2.8	0.84
145. Pyrene	62-74	0.38	NA	2.8	1.06
Inorganics (9010) (Total Composition)					
169. Cyanide	0.5-1.4	0.27	NA	5.44	1.48

*Concentration values for the untreated waste have not been corrected for recovery.
**For detailed discussion of the analytical methods upon which these treatment standards are based, see Appendix D.
+Phenol was not detected in the untreated K051 waste; however, phenol was shown in other characterization data to be present in K051 (see Table 2-7). The range presented is the range of naphthalene in the untreated K048 and K051. Treatment performance data were transferred to phenol from naphthalene.
++The values shown on this table for arithmetic averages and treatment standards have been rounded to show significant figures only.
ND Not detected
NA Not applicable

Table 6-6 (Continued)

CALCULATION OF NONWASTEWATER TREATMENT STANDARDS FOR K051

Regulated Constituent (SW-846 Method Number)**	Unstabilized Ash* Range (ppm)	Arithmetic++ Average of Corrected Treatment Values (ppm)	Constituent From Which Treatment Data Were Transferred	Variability Factor (VF)	Treatment++ Standard (Average x VF) (ppm)
Metals (TCLP)					
155. Arsenic (7060)	0.006-0.018	0.003	NA	1.69	0.006
159. Chromium (total) (6010)	2.64-3.26	1.48	NA	1.14	1.68
160. Copper (6010)	0.023	0.005	NA	2.40	0.13
163. Nickel (6010)	0.027-0.041	0.026	NA	1.79	0.048
164. Selenium (7740)	0.025-0.15	0.018	NA	1.38	0.025
167. Vanadium (6010)	3.24-4.67	0.16	NA	1.09	0.18
168. Zinc (6010)	0.11-0.15	0.046	NA	3.09	0.141

*TCLP extract concentrations for the untreated waste have been corrected for recovery.
**For detailed discussion of the analytical methods upon which these treatment standards are based, see Appendix D.
++The values shown on this table for arithmetic averages and treatment standards have been rounded to show significant figures only.
NA Not applicable

Table 6-7

CALCULATION OF NONWASTEWATER TREATMENT STANDARDS FOR K052

Regulated Constituent (SW-846 Method Number)[1]	Constituent From Which Treatment Data Were Transferred*	Untreated Concentration (ppm)**	Arithmetic++ Average of Corrected Treatment Values (ppm)	Variability Factor (VF)	Treatment++ Standard (Average x VF) (ppm)
Volatiles (8240) (Total Composition)					
43. Toluene	Toluene	22-120	2.71	1.45	3.93
215-217. Xylene (total)	Xylene	<14-120	3.42	2.50	8.54
Semivolatiles (8270) (Total Composition)					
81. o-Cresol	Naphthalene	93-170	0.30	2.8	0.84
82. p-Cresol	Naphthalene	93-170	0.30	2.8	0.84
121. Naphthalene	Naphthalene	93-170	0.30	2.8	0.84
141. Phenanthrene	Phenanthrene	77-120	0.30	2.8	0.84
142. Phenol	Naphthalene	93-170	0.30	2.8	0.84
Inorganics (9010) (Total Composition)					
169. Cyanide	Cyanide	0.5-1.4	0.27	5.44	1.48

[1]For detailed discussion of the analytical methods upon which these treatment standards are based, see Appendix D.

*Data were transferred from K048-K051.

**This is the untreated concentration of each constituent in K048 and K051 from which treatment data were transferred.

++The values shown on this table for arithmetic averages and treatment standards have been rounded to show significant figures only.

Table 6-7 (Continued)

CALCULATION OF NONWASTEWATER TREATMENT STANDARDS FOR K052

Regulated Constituent (SW-846 Method Number)[1]	Untreated Concentration (ppm)**	Arithmetic++ Average of Corrected Treatment Values (ppm)	Constituent From Which Treatment Data Were Transferred*	Variability Factor (VF)	Treatment++ Standard (Average x VF) (ppm)
Metals (TCLP)					
155. Arsenic	0.006-0.018	0.003	Arsenic	1.69	0.006
159. Chromium (total)	2.64-3.26	1.48	Chromium (total)	1.14	1.68
160. Copper	0.023	0.005	Copper	2.40	0.13
163. Nickel	0.027-0.041	0.026	Nickel	1.79	0.048
164. Selenium	0.025-0.15	0.018	Selenium	1.38	0.025
167. Vanadium	3.24-4.67	0.16	Vanadium	1.09	0.18
168. Zinc	0.11-0.15	0.046	Zinc	3.09	0.141

[1]For detailed discussion of the analytical methods upon which these treatment standards are based, see Appendix D.

*Data were transferred from K048-K051.

**This is the untreated concentration of each constituent in K048 and K051 from which treatment data were transferred.

++The values shown on this table for arithmetic averages and treatment standards have been rounded to show significant figures only.

Table 6-8

CALCULATION OF WASTEWATER TREATMENT STANDARDS FOR K048

Regulated Constituent (SW-846 Method Number)*	Constituent From Which Treatment Data Were Transferred+	Untreated Concentration (ppm)**	Arithmetic++ Average of Corrected Treatment Values (ppm)	Variability Factor (VF)	Treatment++ Standard (Average x VF) (ppm)
Volatiles (8240) (Total Composition)					
43. Toluene	Bis(2-chloroethyl)-ether	280-340	0.002	2.8	0.007
215-217. Xylene (total)	Bis(2-chloroethyl)-ether	280-340	0.002	2.8	0.007
Semivolatiles (8270) (Total Composition)					
109. Fluorene	Fluorene	16-22	0.002	2.8	0.007
121. Naphthalene	Naphthalene	314-470	0.002	2.8	0.007
141. Phenanthrene	Phenanthrene	11-21	0.002	2.8	0.007
142. Phenol	Naphthalene	314-470	0.002	2.8	0.007
Metals (Total Composition)					
159. Chromium (total) (7190)	Chromium (total)	393-2581	0.19	1.09	0.20
161. Lead (7420)	Lead	0.02-210	0.013	2.8	0.037
168. Zinc (289.1)	Zinc	1.0-171	0.25	1.62	0.40

*For detailed discussion of the analytical methods upon which these treatment standards are based, see Appendix D.

**This is the untreated concentration of each constituent in the waste from which treatment data were transferred.

+ Volatiles and semivolatiles were transferred from K019 wastewater (Reference 26); metals were transferred from the Envirite Report (Reference 27).

++The values shown on this table for arithmetic averages and treatment standards have been rounded to show significant figures only.

Table 6-9

CALCULATION OF WASTEWATER TREATMENT STANDARDS FOR K049

Regulated Constituent (SW-846 Method Number)*	Constituent From Which Treatment Data Were Transferred+	Untreated Concentration (ppm)**	Arithmetic++ Average of Corrected Treatment Values (ppm)	Variability Factor (VF)	Treatment++ Standard (Average x VF) (ppm)
Volatiles (8240) (Total Composition)					
4. Benzene	1,2,4-Trichlorobenzene	65-100	0.008	2.8	0.023
43. Toluene	Bis(2-chloroethyl)-ether	280-340	0.002	2.8	0.007
215-217. Xylene (total)	Bis(2-chloroethyl)-ether	280-340	0.002	2.8	0.007
Semivolatiles (8270) (Total Composition)					
57. Anthracene	Phenanthrene	11-21	0.002	2.8	0.007
86. Dimethylphenol	Naphthalene	314-470	0.002	2.8	0.007
121. Naphthalene	Naphthalene	314-470	0.002	2.8	0.007
141. Phenanthrene	Phenanthrene	11-21	0.002	2.8	0.007
142. Phenol	Naphthalene	314-470	0.002	2.8	0.007
Metals (Total Composition)					
159. Chromium (total) (7190)	Chromium (total)	393-2581	0.19	1.09	0.20
161. Lead (7420)	Lead	0.02-210	0.013	2.8	0.037
168. Zinc (289.1)	Zinc	1.0-171	0.25	1.62	0.40

*For detailed discussion of the analytical methods upon which these treatment standards are based, see Appendix D.

**This is the untreated concentration of each constituent in the waste from which treatment data were transferred.

+ Volatiles and semivolatiles were transferred from K019 wastewater (Reference 26); metals were transferred from the Envirite Report (Reference 27).

++The values shown on this table for arithmetic averages and treatment standards have been rounded to show significant figures only.

Table 6-10

CALCULATION OF WASTEWATER TREATMENT STANDARDS FOR K050

Regulated Constituent (SW-846 Method Number)*	Constituent From Which Treatment Data Were Transferred+	Untreated Concentration (ppm)**	Arithmetic++ Average of Corrected Treatment Values (ppm)	Variability Factor (VF)	Treatment++ Standard (Average x VF) (ppm)
Semivolatiles (8270) (Total Composition)					
142. Phenol	Naphthalene	314-470	0.002	2.8	0.007
Metals (Total Composition)					
159. Chromium (total) (7190)	Chromium (total)	393-2581	0.19	1.09	0.20
161. Lead (7420)	Lead	0.02-210	0.013	2.8	0.037
168. Zinc (289.1)	Zinc	1.0-171	0.25	1.62	0.40

*For detailed discussion of the analytical methods upon which these treatment standards are based, see Appendix D.

**This is the untreated concentration of each constituent in the waste from which treatment data were transferred.

+ Volatiles and semivolatiles were transferred from K019 wastewater (Reference 26); metals were transferred from the Envirite Report (Reference 27).

++The values shown on this table for arithmetic averages and treatment standards have been rounded to show significant figures only.

Table 6-11

CALCULATION OF WASTEWATER TREATMENT STANDARDS FOR K051

Regulated Constituent (SW-846 Method Number)*	Constituent From Which Treatment Data Were Transferred+	Untreated Concentration (ppm)**	Arithmetic++ Average of Corrected Treatment Values (ppm)	Variability Factor (VF)	Treatment++ Standard (Average x VF) (ppm)
Volatiles (8240) (Total Composition)					
43. Toluene	Bis(2-chloroethyl)-ether	280-340	0.002	2.8	0.007
215-217. Xylene (total)	Bis(2-chloroethyl)-ether	280-340	0.002	2.8	0.007
Semivolatiles (8270) (Total Composition)					
52. Acenaphthene	Fluorene	16-22	0.002	2.8	0.007
109. Fluorene	Fluorene	16-22	0.002	2.8	0.007
121. Naphthalene	Naphthalene	314-470	0.002	2.8	0.007
141. Phenanthrene	Phenanthrene	11-21	0.002	2.8	0.007
142. Phenol	Naphthalene	314-470	0.002	2.8	0.007
Metals (Total Composition)					
159. Chromium (total) (7190)	Chromium (total)	393-2581	0.19	1.09	0.20
161. Lead (7420)	Lead	0.02-210	0.013	2.8	0.037
168. Zinc (289.1)	Zinc	1.0-171	0.25	1.62	0.40

*For detailed discussion of the analytical methods upon which these treatment standards are based, see Appendix D.

**This is the untreated concentration of each constituent in the waste from which treatment data were transferred.

+ Volatiles and semivolatiles were transferred from K019 wastewater (Reference 26); metals were transferred from the Envirite Report (Reference 27).

++The values shown on this table for arithmetic averages and treatment standards have been rounded to show significant figures only.

Table 6-12

CALCULATION OF WASTEWATER TREATMENT STANDARDS FOR K052

Regulated Constituent (SW-846 Method Number)*	Constituent From Which Treatment Data Were Transferred+	Untreated Concentration (ppm)**	Arithmetic++ Average of Corrected Treatment Values (ppm)	Variability Factor (VF)	Treatment++ Standard (Average x VF) (ppm)
Volatiles (8240) (Total Composition)					
46. Benzene	1,2,4-Trichlorobenzene	65-100	0.008	2.8	0.023
215-217. Xylene (total)	Bis(2-chloroethyl)-ether	280-340	0.002	2.8	0.007
Semivolatiles (8270) (Total Composition)					
81. ortho-Cresol	Naphthalene	314-470	0.002	2.8	0.007
82. para-Cresol	Naphthalene	314-470	0.002	2.8	0.007
96. 2,4-Dimethylphenol	Naphthalene	314-470	0.002	2.8	0.007
121. Naphthalene	Naphthalene	314-470	0.002	2.8	0.007
141. Phenanthrene	Phenanthrene	11-21	0.002	2.8	0.007
142. Phenol	Naphthalene	314-470	0.002	2.8	0.007
Metals (Total Composition)					
159. Chromium (total) (7190)	Chromium (total)	393-2581	0.19	1.09	0.20
161. Lead (7420)	Lead	0.02-210	0.013	2.8	0.037
168. Zinc (289.1)	Zinc	1.0-171	0.25	1.62	0.40

*For detailed discussion of the analytical methods upon which these treatment standards are based, see Appendix D.

**This is the untreated concentration of each constituent in the waste from which treatment data were transferred.

+ Volatiles and semivolatiles were transferred from K019 wastewater (Reference 26); metals were transferred from the Envirite Report (Reference 27).

++The values shown on this table for arithmetic averages and treatment standards have been rounded to show significant figures only.

7.0 CONCLUSIONS

The Agency has proposed treatment standards for the listed refinery waste codes K048-K052. Standards for nonwastewater forms of these wastes are presented in Table 7-1 and standards for wastewater forms of these wastes are presented in Table 7-2.

The treatment standards proposed for K048-K052 have been developed consistent with EPA's promulgated methodology for BDAT (November 7, 1986, 51 FR 40572). These five wastes are generated by the treatment of refinery process wastewaters and from heat exchanger cleaning and product storage operations. Based on a careful review of the industry processes which generate these wastes and all available data characterizing these wastes, the Agency has determined that these wastes (K048-K052) represent a separate waste treatability group. Wastes in this treatability group are comprised of water, oil and grease, dirt, sand and other solids, and organic and metal BDAT List constituents.

The BDAT List constituents generally present in wastes of this treatability group are benzene, toluene, xylene, acenaphthene, anthracene, benzo(a)pyrene, bis(2-ethylhexyl)phthalate, chrysene, ortho-cresol, para-cresol, 2,4-dimethylphenol, di-n-butyl phthalate, fluorene, naphthalene, phenanthrene, phenol, pyrene, arsenic, total chromium, copper, lead, nickel, selenium, vanadium, zinc and cyanide. Although the concentrations of specific constituents will vary from facility to facility, all of the wastes are

expected to contain similar BDAT List organics and metals and have high filterable solids content. As a result, EPA has examined the sources of the wastes, applicable technologies, and attainable treatment performance in order to support a single regulatory approach for these five listed refinery wastes.

Through available data bases, EPA's technology testing program, and data submitted by industry, the Agency has identified the following demonstrated technologies for treatment of organic constituents present in the wastes which are part of this treatability group: incineration technologies including fluidized bed and rotary kiln incineration; solvent extraction; thermal drying; and pressure filtration. Additionally, stabilization is demonstrated for treatment of the BDAT List metal constituents present in nonwastewater residuals. For metals in the wastewater residuals, EPA has identified the following demonstrated treatment train: chromium reduction followed by chemical precipitation, and filtration or sedimentation.

EPA has determined that for BDAT List organics in K048-K052 wastes, fluidized bed incineration achieves a level of performance that represents treatment by BDAT. For metals in the incinerator ash, EPA has determined that stabilization using a lime and fly ash binder achieves a level of performance that represents treatment by BDAT. For BDAT List metals in wastewater, EPA has identified chromium reduction followed by lime and sulfide precipitation and vacuum filtration as achieving a level of performance for metals that represents treatment by BDAT.

Regulated organic and inorganic constituents in nonwastewaters were selected from those BDAT List organic and inorganic constituents detected in the untreated wastes that were treated by fluidized bed incineration. Regulated metal constituents in nonwastewaters were selected from those BDAT List metal constituents detected in the untreated wastes that were treated by stabilization of ash from fluidized bed incineration. Some BDAT List organic constituents were not regulated because these constituents were believed to be adequately controlled by regulation of other constituents.

Regulated organic constituents in wastewater were selected from the BDAT List organic constituents detected in the untreated wastes that show treatment using incineration. Regulated metal and inorganic constituents were selected from BDAT List metal and inorganic constituents detected in the untreated wastes and similar wastes that showed treatment using incineration followed by wastewater treatment using chromium reduction, lime and sulfide precipitation, and vacuum filtration. Some BDAT List organic, metal and inorganic constituents were not regulated because these constituents were believed to be adequately controlled by regulation of other constituents.

BDAT treatment standards for K048-K052 were derived from analytical data that have been adjusted to take into account analytical interference associated with the chemical make-up of the sample. Subsequently, the average adjusted concentration was multiplied by a variability factor to derive the BDAT treatment standard. The variability factor represents the variability inherent in the treatment process and sampling and analytical methods.

Variability factors were determined by statistically calculating the variability seen for a number of data points for a given constituent. For constituents for which specific variability factors could not be calculated, a variability factor of 2.8 was used.

The Agency is proposing BDAT treatment standards for the two treatability subgroups of K048-K052: wastewaters and nonwastewaters. BDAT treatment standards for K048-K052 nonwastewater are proposed based on performance data from a treatment train that consisted of full scale fluidized bed incineration followed by ash stabilization. Ash stabilization was achieved by using lime and fly ash as stabilization agents. BDAT List organic constituent treatment standards for K048-K052 wastewaters are proposed based on a transfer of treatment performance data for the scrubber water residual from the incineration of K019 nonwastewaters (K019 is listed as heavy ends from the distillation of ethylene dichloride in ethylene dichloride production). BDAT List metal constituent treatment standards for K048-K052 wastewaters are proposed based on transferred treatment performance data from chromium reduction, lime and sulfide precipitation and vacuum filtration treatment of K062 and metal-bearing characteristic wastes.

Petroleum refining wastes K048-K052 may be land disposed if they meet the standards at the point of disposal. The BDAT technologies upon which the treatment standards are based (fluidized bed incineration followed by stabilization, and chromium reduction followed by lime and sulfide precipitation and vacuum filtration) need not be specifically utilized prior to land

disposal, provided that an alternate technology utilized achieves the standards.

These standards become effective no later than August 8, 1988, as per the schedule set forth in 40 CFR 268.10. Due to the lack of nationwide incineration capacity at this time, the Agency has proposed to grant a 2-year nationwide variance to the effective date of the land disposal ban for these wastes. A detailed discussion of the Agency's determination that a lack of nationwide incineration capacity exists is presented in the Capacity Background Document which is available in the Administrative Record for this rule.

Table 7-1

BDAT TREATMENT STANDARDS FOR
K048-K052 NONWASTEWATERS

	Regulated Organic Constituents	Total Concentration (mg/kg)				
		K048	K049	K050	K051	K052
4.	Benzene	NA	3.93	NA	NA	NA
43.	Toluene	3.93	3.93	NA	3.93	3.93
215-217.	Xylene (total)	8.54	8.54	NA	8.54	8.54
62.	Benzo(a)pyrene	NA	NA	0.84	NA	NA
70.	Bis(2-ethylhexyl)phthalate	4.18	NA	NA	NA	NA
70.	Chrysene	0.84	0.84	NA	0.84	NA
81.	ortho-Cresol	NA	NA	NA	NA	0.84
82.	para-Cresol	NA	NA	NA	NA	0.84
98.	Di-n-butyl phthalate	4.18	NA	NA	4.18	NA
121.	Naphthalene	0.84	0.84	NA	0.84	0.84
141.	Penanthrene	0.84	0.84	NA	0.84	0.84
142.	Phenol	0.84	0.84	0.84	0.84	0.84
145.	Pyrene	NA	1.06	NA	1.06	NA

	Regulated Metal Constituents	TCLP (mg/l)				
		K048	K049	K050	K051	K052
155.	Arsenic	0.006	0.006	0.006	0.006	0.006
159.	Chromium (total)	1.68	1.68	1.68	1.68	1.68
160.	Copper	0.013	0.013	0.013	0.013	0.013
163.	Nickel	0.048	0.048	0.048	0.048	0.048
164.	Selenium	0.025	0.025	0.025	0.025	0.025
167.	Vanadium	0.18	0.18	0.18	0.18	0.18
168.	Zinc	0.141	0.141	0.141	0.141	0.141

	Regulated Inorganic Constituents	Total Concentration (mg/kg)				
		K048	K049	K050	K051	K052
169.	Cyanide	1.48	1.48	1.48	1.48	1.48

NA - Not applicable. This constituent is not being proposed for regulation for this waste.

Table 7-2

BDAT TREATMENT STANDARDS FOR K048-K052 WASTEWATERS

Regulated Constituents	Total Concentration (mg/l)				
	K048	K049	K050	K051	K052
4. Benzene	NA	0.023	NA	NA	0.023
43. Toluene	0.007	0.007	NA	0.007	NA
215-217. Xylene (total)	0.007	0.007	NA	0.007	0.007
52. Acenaphthene	NA	NA	NA	0.007	NA
57. Anthracene	NA	0.007	NA	NA	NA
81. ortho-Cresol	NA	NA	NA	NA	0.007
82. para-Cresol	NA	NA	NA	NA	0.007
96. 2,4-dimethylphenol	NA	0.007	NA	NA	0.007
109. Fluorene	0.007	NA	NA	0.007	NA
121. Naphthalene	0.007	0.007	NA	0.007	0.007
141. Phenanthrene	0.007	0.007	NA	0.007	0.007
142. Phenol	0.007	0.007	0.007	0.007	0.007
159. Chromium (total)	0.20	0.20	0.20	0.20	0.20
162. Lead	0.037	0.037	0.037	0.037	0.037
169. Zinc	0.40	0.40	0.40	0.40	0.40

NA - Not Applicable. This constituent is not being proposed for regulation for this waste.

8.0 REFERENCES

1. Jacobs Engineering Company. Alternatives for Hazardous Waste Management in the Petroleum Refining Industry. 1979.

2. American Petroleum Institute. 1983. 1982 Refinery Solid Waste Survey. Prepared by Environmental Resources Management, Inc.

3. Rosenberg, D.G. Assessment of Hazardous Waste Practices in the Petroleum Refining Industry. Jacobs Engineering Company, Pasadena, CA. June 1976.

4. Cantrell, Ailleen. "Annual Refining Survey." Oil and Gas Journal. Vol. 85, No. 13. March 30, 1987.

5. U.S. Environmental Protection Agency. Identification and Listing of Hazardous Waste Under RCRA, Subtitle C, Section 3001, Background Document. May 1981.

6. U.S. EPA. Onsite Engineering Report of Treatment Technology Performance and Operation for Amoco Oil Company, Whiting, Indiana. February 29, 1988.

7. U.S. EPA. Onsite Engineering Report of Stabilization of Fluidized Bed Incineration Ash at Waterways Experiment Station, Vicksburg, Mississippi. February 19, 1988.

8. American Petroleum Institute. Evaluation of Treatment Technologies for Listed Petroleum Refinery Wastes: Interim Report. April 27, 1987.

9. Sohio Oil Co. 1987. Demonstration of a Solvent Extraction Process for Treating Listed Petroleum Refinery Wastes. Submitted to U.S. EPA on June 12, 1987.

10. Resources Conservation Co. 1987. B.E.S.T. Clean Up, BDAT Performance Test Results. May 19, 1987 Report Submitted to EPA.

11. Jones, H.R. Pollution Control in the Petroleum Industry. Noyes Data Corp., Park Ridge, NJ. 1973.

12. Gloyna, E., and D. Ford. The Characteristics and Pollutional Problems Associated with Petrochemical Wastes. Engineering Science Inc., Austin, TX. 1970.

13. USEPA. 1988. U.S. Environmental Protection Agency. Final Characterization Report of Waste Characterization for Conoco, Inc., Ponca City, Oklahoma. February 22, 1988.

14. Delisting Petition #503.

15. Environ Corporation. Characterization of Waste Streams Listed in the 49 CFR Section 261 Waste Profiles. Prepared for U.S. EPA, Office of Solid Waste, Waste Identification Branch, Characterization and Assessment Division.

16. Delisting Petition #205.

17. Delisting Petition #386.

18. Delisting Petition #396.

19. Delisting Petition #421.

20. Delisting Petition #469.

21. Delisting Petition #481.

22. Askew, M.W. et al. "Meet Environmental Needs for Refinery Expansions." Hydrocarbon Processing. October 1983. pp 65-70.

23. Delisting Petition #530.

24. Delisting Petition #264.

25. Delisting Petition #426.

26. U.S. Environmental Protection Agency. Best Demonstrated and Available Technology (BDAT) Background Document Supporting the Proposed Land Disposal Restrictions Rule for First Third Wastes. Volume 2. Organic Chemicals Waste Codes K016, K018, K019, K020, K030. March 18, 1988.

27. U.S. Environmental Protection Agency. 1986. Onsite Engineering Report of Treatment Technology Performance and Operation for Envirite Corporation. Prepared by Versar for Office of Solid Waste, USEPA, under Contract No. 68-01-7053. December 1986.

28. U.S. Environmental Protection Agency. Onsite Engineering Report for Horsehead Resource Development Company for K061. Draft Report. March 1988.

29. BP Oil Company. 1987. BP Oil Company - Alliance Refinery Petition for the Exclusion from Hazardous Waste Regulation of a Solid Waste Residue from the Solvent Extraction Treatment of Petroleum Refining Wastes. Submitted to U.S. EPA on October 28, 1987. P.O. Box 395, Bell Chase, Louisiana 70037.

30. C.F. Systems Corporation. 1987. Company literature: C.F. Systems Units to Render Refinery Wastes Non-Hazardous. March 30, 1987.

31. Windholz, Martha, editor. 1983. The Merck Index, 10th edition. Rathway, NJ: Merck & Company.

32. Verchueren Karel. 1983. Handbook of Environmental Data on Organic Chemicals. 2nd edition. pp. 575-576. NY: Van Nostrand Reinhold Company, Inc.

33. Weast, R.C., editor. 1980. CRC Handbook of Chemistry and Physics, 61st edition. p. C-134. Boca Raton, FL: CRC Press, Inc.

34. Dean, J.A., editor. 1979. Lange's Handbook of Chemistry, 12th edition. pp. 10-118-9. NY: McGraw-Hill.

35. Sanderson, R.T. 1971. Chemical Bonds and Bond Energy. Volume 21 in Physical Chemistry. NY: Academic Press.

APPENDIX A

A.1 F Value Determination for ANOVA Test

As noted earlier in Section 1.0, EPA is using the statistical method known as analysis of variance in the determination of the level of performance that represents "best" treatment where more than one technology is demonstrated. This method provides a measure of the differences between data sets. If the differences are not statistically significant, the data sets are said to be homogeneous.

If the Agency found that the levels of performance for one or more technologies are not statistically different (i.e., the data sets are homogeneous), EPA would average the long term performance values achieved by each technology and then multiply this value by the largest variability factor associated with any of the acceptable technologies. If EPA found that one technology performs significantly better (i.e., the data sets are not homogeneous), BDAT would be the level of performance achieved by the best technology multiplied by its variability factor.

To determine whether any or all of the treatment performance data sets are homogeneous using the analysis of variance method, it is necessary to compare a calculated "F value" to what is known as a "critical value." (See Table A-1.) These critical values are available in most statistics texts (see, for example, Statistical Concepts and Methods by Bhattacharyya and Johnson, 1977, John Wiley Publications, New York).

Where the F value is less than the critical value, all treatment data sets are homogeneous. If the F value exceeds the critical value, it is

necessary to perform a "pair wise F" test to determine if any of the sets are homogeneous. The "pair wise F" test must be done for all of the various combinations of data sets using the same method and equation as the general F test.

The F value is calculated as follows:

(i) All data are natural logtransformed.

(ii) The sum of the data points for each data set is computed (T_i).

(iii) The statistical parameter known as the sum of the squares between data sets (SSB) is computed:

$$SSB = \left[\sum_{i=1}^{k} \left(\frac{T_i^2}{n_i} \right) \right] - \left(\frac{\left[\sum_{i=1}^{k} T_i \right]^2}{N} \right)$$

where:

k = number of treatment technologies
n_i = number of data points for technology i
N = number of data points for all technologies
T_i = sum of natural logtransformed data points for each technology.

(iv) The sum of the squares within data sets (SSW) is computed:

$$SSW = \left[\sum_{i=1}^{k} \sum_{j=1}^{n_i} x^2_{i,j} \right] - \sum_{i=1}^{k} \left(\frac{T_i^2}{n_i} \right)$$

where:

$x_{i,j}$ = the natural logtransformed observations (j) for treatment technology (i).

(v) The degrees of freedom corresponding to SSB and SSW are calculated. For SSB, the degree of freedom is given by k-1. For SSW, the degree of freedom is given by N-k.

(vi) Using the above parameters, the F value is calculated as follows:

$$F = \frac{MSB}{MSW}$$

where:

MSB = SSB/(k-1) and
MSW = SSW/(N-k).

A computational table summarizing the above parameters is shown below.

Computational Table for the F Value

Source	Degrees of freedom	Sum of squares	Mean square	F
Between	K-1	SSB	MSB = SSB/k-1	MSB/MSW
Within	N-k	SSW	MSW = SSW/N-k	

Below are three examples of the ANOVA calculation. The first two represent treatment by different technologies that achieve statistically similar treatment; the last example represents a case where one technology achieves significantly better treatment than the other technology.

Table A-1

F Distribution at the 95 Percent Confidence Level

$F_{0.95}$

Denominator degrees of freedom	Numerator degrees of freedom 1	2	3	4	5	6	7	8	9
1	161.4	199.5	215.7	224.6	230.2	234.0	236.8	238.9	240.5
2	18.51	19.00	19.16	19.25	19.30	19.33	19.35	19.37	19.38
3	10.13	9.55	9.28	9.12	9.01	8.94	8.89	8.85	8.81
4	7.71	6.94	6.59	6.39	6.26	6.16	6.09	6.04	6.00
5	6.61	5.79	5.41	5.19	5.05	4.95	4.88	4.82	4.77
6	5.99	5.14	4.76	4.53	4.39	4.28	4.21	4.15	4.10
7	5.59	4.74	4.35	4.12	3.97	3.87	3.79	3.73	3.68
8	5.32	4.46	4.07	3.84	3.69	3.58	3.50	3.44	3.39
9	5.12	4.26	3.86	3.63	3.48	3.37	3.29	3.23	3.18
10	4.96	4.10	3.71	3.48	3.33	3.22	3.14	3.07	3.02
11	4.84	3.98	3.59	3.36	3.20	3.09	3.01	2.95	2.90
12	4.75	3.89	3.49	3.26	3.11	3.00	2.91	2.85	2.80
13	4.67	3.81	3.41	3.18	3.03	2.92	2.83	2.77	2.71
14	4.60	3.74	3.34	3.11	2.96	2.85	2.76	2.70	2.65
15	4.54	3.68	3.29	3.06	2.90	2.79	2.71	2.64	2.59
16	4.49	3.63	3.24	3.01	2.85	2.74	2.66	2.59	2.54
17	4.45	3.59	3.20	2.96	2.81	2.70	2.61	2.55	2.49
18	4.41	3.55	3.16	2.93	2.77	2.66	2.58	2.51	2.46
19	4.38	3.52	3.13	2.90	2.74	2.63	2.54	2.48	2.42
20	4.35	3.49	3.10	2.87	2.71	2.60	2.51	2.45	2.39
21	4.32	3.47	3.07	2.84	2.68	2.57	2.49	2.42	2.37
22	4.30	3.44	3.05	2.82	2.66	2.55	2.46	2.40	2.34
23	4.28	3.42	3.03	2.80	2.64	2.53	2.44	2.37	2.32
24	4.26	3.40	3.01	2.78	2.62	2.51	2.42	2.36	2.30
25	4.24	3.39	2.99	2.76	2.60	2.49	2.40	2.34	2.28
26	4.23	3.37	2.98	2.74	2.59	2.47	2.39	2.32	2.27
27	4.21	3.35	2.96	2.73	2.57	2.46	2.37	2.31	2.25
28	4.20	3.34	2.95	2.71	2.56	2.45	2.36	2.29	2.24
29	4.18	3.33	2.93	2.70	2.55	2.43	2.35	2.28	2.22
30	4.17	3.32	2.92	2.69	2.53	2.42	2.33	2.27	2.21
40	4.08	3.23	2.84	2.61	2.45	2.34	2.25	2.18	2.12
60	4.00	3.15	2.76	2.53	2.37	2.25	2.17	2.10	2.04
120	3.92	3.07	2.68	2.45	2.29	2.17	2.09	2.02	1.96
∞	3.84	3.00	2.60	2.37	2.21	2.10	2.01	1.94	1.88

Example 1
Methylene Chloride

Steam stripping				Biological treatment			
Influent (μg/l)	Effluent (μg/l)	ln(effluent)	$[\ln(\text{effluent})]^2$	Influent (μg/l)	Effluent (μg/l)	ln(effluent)	$[\ln(\text{effluent})]^2$
1550.00	10.00	2.30	5.29	1960.00	10.00	2.30	5.29
1290.00	10.00	2.30	5.29	2568.00	10.00	2.30	5.29
1640.00	10.00	2.30	5.29	1817.00	10.00	2.30	5.29
5100.00	12.00	2.48	6.15	1640.00	26.00	3.26	10.63
1450.00	10.00	2.30	5.29	3907.00	10.00	2.30	5.29
4600.00	10.00	2.30	5.29				
1760.00	10.00	2.30	5.29				
2400.00	10.00	2.30	5.29				
4800.00	10.00	2.30	5.29				
12100.00	10.00	2.30	5.29				
Sum:							
-	-	23.18	53.76	-	-	12.46	31.79
Sample Size:							
10	10	10	-	5	5	5	-
Mean:							
3669	10.2	2.32	-	2378	13.2	2.49	-
Standard Deviation:							
3328.67	.63	.06	-	923.04	7.15	.43	-
Variability Factor:							
	1.15	-	-	-	2.48	-	-

ANOVA Calculations:

$$SSB = \left[\sum_{i=1}^{k} \left(\frac{T_i^2}{n_i} \right) \right] - \left(\frac{\left[\sum_{i=1}^{k} T_i \right]^2}{N} \right)$$

$$SSW = \left[\sum_{i=1}^{k} \sum_{j=1}^{n_i} x^2_{i,j} \right] - \sum_{i=1}^{k} \left(\frac{T_i^2}{n_i} \right)$$

$$MSB = SSB/(k-1)$$

$$MSW = SSW/(N-k)$$

Example 1 (continued)

$F = MSB/MSW$

where:

k = number of treatment technologies

n_i = number of data points for technology i

N = number of natural log transformed data points for all technologies

T_i = sum of log transformed data points for each technology

X_{ij} = the nat. log transformed observations (j) for treatment technology (i)

$n_1 = 10,\ n_2 = 5,\ N = 15,\ k = 2,\ T_1 = 23.18,\ T_2 = 12.46,\ T = 35.64,\ T^2 = 1270.21$

$T_1^2 = 537.31 \quad T_2^2 = 155.25$

$$SSB = \left(\frac{537.31}{10} + \frac{155.25}{5}\right) - \frac{1270.21}{15} = 0.10$$

$$SSW = (53.76 + 31.79) - \left(\frac{537.31}{10} + \frac{155.25}{5}\right) = 0.77$$

$MSB = 0.10/1 = 0.10$

$MSW = 0.77/13 = 0.06$

$$F = \frac{0.10}{0.06} = 1.67$$

ANOVA Table

Source	Degrees of freedom	SS	MS	F
Between(B)	1	0.10	0.10	1.67
Within(W)	13	0.77	0.06	

The critical value of the F test at the 0.05 significance level is 4.67. Since the F value is less than the critical value, the means are not significantly different (i.e., they are homogeneous).

Note: All calculations were rounded to two decimal places. Results may differ depending upon the number of decimal places used in each step of the calculations.

Example 2
Trichloroethylene

Steam stripping				Biological treatment			
Influent (μg/l)	Effluent (μg/l)	ln(effluent)	$[\ln(\text{effluent})]^2$	Influent (μg/l)	Effluent (μg/l)	ln(effluent)	$[\ln(\text{effluent})]^2$
1650.00	10.00	2.30	5.29	200.00	10.00	2.30	5.29
5200.00	10.00	2.30	5.29	224.00	10.00	2.30	5.29
5000.00	10.00	2.30	5.29	134.00	10.00	2.30	5.29
1720.00	10.00	2.30	5.29	150.00	10.00	2.30	5.29
1560.00	10.00	2.30	5.29	484.00	16.25	2.79	7.78
10300.00	10.00	2.30	5.29	163.00	10.00	2.30	5.29
210.00	10.00	2.30	5.29	182.00	10.00	2.30	5.29
1600.00	27.00	3.30	10.89				
204.00	85.00	4.44	19.71				
160.00	10.00	2.30	5.29				
Sum:							
-	-	26.14	72.92	-	-	16.59	39.52
Sample Size:							
10	10	10	-	7	7	7	-
Mean:							
2760	19.2	2.61	-	220	10.89	2.37	-
Standard Deviation:							
3209.6	23.7	.71	-	120.5	2.36	.19	-
Variability Factor:							
-	3.70	-	-	-	1.53	-	-

ANOVA Calculations:

$$SSB = \left[\sum_{i=1}^{k} \left(\frac{T_i^2}{n_i} \right) \right] - \left(\frac{\left[\sum_{i=1}^{k} T_i \right]^2}{N} \right)$$

$$SSW = \left[\sum_{i=1}^{k} \sum_{j=1}^{n_i} x^2_{i,j} \right] - \sum_{i=1}^{k} \left(\frac{T_i^2}{n_i} \right)$$

$$MSB = SSB/(k-1)$$

$$MSW = SSW/(N-k)$$

Example 2 (continued)

$F = MSB/MSW$

where:

k = number of treatment technologies

n_i = number of data points for technology i

N = number of data points for all technologies

T_i = sum of natural log transformed data points for each technology

X_{ij} = the natural log transformed observations (j) for treatment technology (i)

$N_1 = 10$, $N_2 = 7$, $N = 17$, $k = 2$, $T_1 = 26.14$, $T_2 = 16.59$, $T = 42.73$, $T^2 = 1825.85$, $T_1^2 = 683.30$, $T_2^2 = 275.23$

$$SSB = \left(\frac{683.30}{10} + \frac{275.23}{7}\right) - \frac{1825.85}{17} = 0.25$$

$$SSW = (72.92 + 39.52) - \left(\frac{683.30}{10} + \frac{275.23}{7}\right) = 4.79$$

$MSB = 0.25/1 = 0.25$

$MSW = 4.79/15 = 0.32$

$$F = \frac{0.25}{0.32} = 0.78$$

ANOVA Table

Source	Degrees of freedom	SS	MS	F
Between(B)	1	0.25	0.25	0.78
Within(W)	15	4.79	0.32	

The critical value of the F test at the 0.05 significance level is 4.54. Since the F value is less than the critical value, the means are not significantly different (i.e., they are homogeneous).

Note: All calculations were rounded to two decimal places. Results may differ depending upon the number of decimal places used in each step of the calculations.

Example 3
Chlorobenzene

Activated sludge followed by carbon adsorption				Biological treatment			
Influent (μg/l)	Effluent (μg/l)	ln(effluent)	$[\ln(\text{effluent})]^2$	Influent (μg/l)	Effluent (μg/l)	ln(effluent)	$\ln[(\text{effluent})]^2$
7200.00	80.00	4.38	19.18	9206.00	1083.00	6.99	48.86
6500.00	70.00	4.25	18.06	16646.00	709.50	6.56	43.03
6075.00	35.00	3.56	12.67	49775.00	460.00	6.13	37.58
3040.00	10.00	2.30	5.29	14731.00	142.00	4.96	24.60
				3159.00	603.00	6.40	40.96
				6756.00	153.00	5.03	25.30
				3040.00	17.00	2.83	8.01
Sum:							
-	-	14.49	55.20	-	-	38.90	228.34
Sample Size:							
4	4	4	-	7	7	7	-
Mean:							
5703	49	3.62	-	14759	452.5	5.56	-
Standard Deviation:							
1835.4	32.24	.95		16311.86	379.04	1.42	-
Variability Factor:							
-	7.00	-	-	-	15.79	-	-

ANOVA Calculations:

$$SSB = \left[\sum_{i=1}^{k} \left(\frac{T_i^2}{n_i} \right) \right] - \left(\left[\frac{\sum_{i=1}^{k} T_i}{N} \right]^2 \right)$$

$$SSW = \left[\sum_{i=1}^{k} \sum_{j=1}^{n_i} x^2_{i,j} \right] - \sum_{i=1}^{k} \left(\frac{T_i^2}{n_i} \right)$$

MSB = SSB/(k-1)

MSW = SSW/(N-k)

F = MSB/MSW

Example 3 (continued)

where,

k = number of treatment technologies

n_i = number of data points for technology i

N = number of data points for all technologies

T_i = sum of natural log transformed data points for each technology

X_{ij} = the natural log transformed observations (j) for treatment technology (i)

$N_1 = 4$, $N_2 = 7$, $N = 11$, $k = 2$, $T_1 = 14.49$, $T_2 = 38.90$, $T = 53.39$, $T^2 = 2850.49$, $T_1^2 = 209.96$

$T_2^2 = 1513.21$

$$SSB = \left(\frac{209.96}{4} + \frac{1513.21}{7}\right) - \frac{2850.49}{11} = 9.52$$

$$SSW = (55.20 + 228.34) - \left(\frac{209.96}{4} + \frac{1513.21}{7}\right) = 14.88$$

$MSB = 9.52/1 = 9.52$

$MSW = 14.88/9 = 1.65$

$F = 9.52/1.65 = 5.77$

ANOVA Table

Source	Degrees of freedom	SS	MS	F
Between(B)	1	9.53	9.53	5.77
Within(W)	9	14.89	1.65	

The critical value of the F test at the 0.05 significance level is 5.12. Since the F value is larger than the critical value, the means are significantly different (i.e., they are heterogeneous).

Note: All calculations were rounded to two decimal places. Results may differ depending upon the number of decimal places used in each step of the calculations.

A.2. Variability Factor

$$VF = \frac{C_{99}}{Mean}$$

where:

VF = estimate of daily maximum variability factor determined from a sample population of daily data.

C_{99} = Estimate of performance values for which 99 percent of the daily observations will be below. C_{99} is calculated using the following equation: $C_{99} = Exp(y + 2.33\ Sy)$ where y and Sy are the mean and standard deviation, respectively, of the logtransformed data.

Mean = average of the individual performance values.

EPA is establishing this figure as an instantaneous maximum because the Agency believes that on a day-to-day basis the waste should meet the applicable treatment standards. In addition, establishing this requirement makes it easier to check compliance on a single day. The 99th percentile is appropriate because it accounts for almost all process variability.

In several cases, all the results from analysis of the residuals from BDAT treatment are found at concentrations less than the detection limit. In such cases, all the actual concentration values are considered unknown and hence, cannot be used to estimate the variability factor of the analytical results. Below is a description of EPA's approach for calculating the variability factor for such cases with all concentrations below the detection limit.

It has been postulated as a general rule that a lognormal distribution adequately describes the variation among concentrations.

Agency data shows that the treatment residual concentrations are distributed approximately lognormally. Therefore, the lognormal model has been used routinely in the EPA development of numerous regulations in the Effluent Guidelines program and is being used in the BDAT program. The variability factor (VF) was defined as the ratio of the 99th percentile (C_{99}) of the lognormal distribution to its arithmetic mean (Mean).

$$VF = \frac{C_{99}}{Mean} \qquad (1)$$

The relationship between the parameters of the lognormal distribution and the parameters of the normal distribution created by taking the natural logarithms of the lognormally-distributed concentrations can be found in most mathematical statistics texts (see for example: Distribution in Statistics-Volume 1 by Johnson and Kotz, 1970). The mean of the lognormal distribution can be expressed in terms of the mean (μ) and standard deviation (σ) of the normal distribution as follows:

$$C_{99} = Exp\ (\mu + 2.33\sigma) \qquad (2)$$
$$Mean = Exp\ (\mu + .5\sigma^2) \qquad (3)$$

Substituting (2) and (3) in (1) the variability factor can then be expressed in terms of σ as follows:

$$VF = Exp\ (2.33\ \sigma - .5\sigma^2) \qquad (4)$$

For residuals with concentrations that are not all below the detection limit, the 99th percentile and the mean can be estimated from the actual analytical data and accordingly, the variability factor (VF)

can be estimated using equation (1). For residuals with concentrations that are below the detection limit, the above equations can be used in conjunction with the assumptions below to develop a variability factor.

Step 1: The actual concentrations follow a lognormal distribution. The upper limit (UL) is equal to the detection limit. The lower limit (LL) is assumed to be equal to one tenth of the detection limit. This assumption is based on the fact that data from well-designed and well-operated treatment systems generally falls within one order of magnitude.

Step 2: The natural logarithms of the concentrations have a normal distribution with an upper limit equal to ln (UL) and a lower limit equal to ln (LL).

Step 3: The standard deviation (σ) of the normal distribution is approximated by

$$\sigma = [(\ln (UL) - \ln (LL)] / [(2)(2.33)] = [\ln(UL/LL)] / 4.66$$

when LL = (0.1)(UL) then $\sigma = (\ln 10) / 4.66 = 0.494$

Step 4: Substitution of the value from Step 3 in equation (4) yields the variability factor, VF.

$$VF = 2.8$$

Appendix B

MAJOR CONSTITUENT CONCENTRATION CALCULATIONS FOR K048-K052

K048	% Water	% Solids	% Oil and Grease
Amoco OER* (Reference 6)	15	71	14
API, 1983 (Reference 2)	81.9	9.4	8.7
Jacobs, 1976 (Reference 3)	82	5.5	12.5
Petition #264 (Reference 24)	82	6.0	12
BP Report ** (Reference 29)	80	5.0	15
Average:	81.5	6.5	12
Adjusted Average:	81	6	12

K049	% Water	% Solids	% Oil and Grease
Conoco OER (Reference 13)	60	10	30
API, 1983 (Reference 2)	63.1	15.8	21.7
Jacobs, 1976 (Reference 3)	40	12.0	48
Petition #481 (Reference 21)	31.9	14.4	51.7
Petition #421 (Reference 19)	62	3	35
BP Report (Reference 29)	47	6	47
Average:	50.7	10.2	43.9
Adjusted Average:	50	12	37

*These data represent dewatered DAF float and were not used in these calculations.

**Includes DAF bottoms.

Appendix B (Continued)

MAJOR CONSTITUENT CONCENTRATION CALCULATIONS FOR K048-K052

K050	% Water	% Solids	% Oil and Grease
Petition #481 (Reference 21)	37.8	52.5	7.7
Jacobs, 1976 (Reference 3)	53	36	11
API, 1983 (Reference 2)	42.8	55.4	4.8
Average:	44.5	48	7.8
Adjusted Average:	44	48	7

K051	% Water	% Solids	% Oil and Grease
Petition #426 (Reference 25)	81	7	10
Amoco OER (Reference 6)	30	54	15
API, 1983 (Reference 2)	67.4	21.1	12.6
Jacobs, 1976 (Reference 3)	53	24.4	22.6
Petition #481 (Reference 21)	51.6	22.3	22.4
BP Report (Reference 29)	76	5	19
Average:	59.8	22.3	16.9
Adjusted Average:	60	22	17

K052	% Water	% Solids	% Oil and Grease
API, 1983 (Reference 2)	37.9	59	8.5
Jacobs, 1976 (Reference 3)	0.3	79.7	20
Conoco OER (Reference 13)	18	70	10
Average:	18.7	69.6	12.8
Adjusted Average:	18	69	12

Appendix C

SUMMARY OF PETROLEUM REFINERY PLANT CODES

Plant Code	Plant Name	Data Source
A	Amoco Oil Company, Whiting, Indiana	EPA Testing
B	Unknown	API Report
C	Unknown	API Report
D	Unknown	API Report
E	Unknown	API Report
F	Unknown	API Report
G	General Refining Superfund Site, Garden City, Georgia	Resources Conservation Company
H	Unknown	API Report
I	Waterways Experiment Station, Vicksburg, Mississippi	EPA Testing
J	Unknown	API Report
K	SOHIO Oil Alliance Refining, Louisiana	Standard Oil Company
L	Unknown	CF Systems

APPENDIX D

ANALYTICAL QA/QC

The analytical methods used for analysis of the regulated constituents identified in Section 5.0 are presented in this Appendix. Methods are presented for those technologies determined to be BDAT. Table D-1 presents the methods used for analysis of the fluidized bed incinerator ash. Analyses presented for organics and cyanide were performed on the fluidized bed incinerator ash, while analyses presented for metals were performed on the stabilized fluidized bed incinerator ash. The methods used for analysis of organics in the fluidized bed incinerator wastewater are presented in Reference 26 (K019), while the methods used for analysis of metals in this wastewater are presented in Reference 27 (Envirite).

SW-846 methods (EPA's Test Methods for Evaluating Solid Waste: Physical/Chemical Methods, SW-846) are used in most cases for determining total constituent concentration. Leachate concentrations were determined using the Toxicity Characteristic Leaching Procedure (TCLP), published in 51 FR 40643, November 7, 1986.

In some instances it was necessary to deviate from the SW-846 methods. Deviations from SW-846 methods required to analyze the fluidized bed incinerator ash are listed in Table D-2. SW-846 allows for the use of alternative or equivalent procedures or equipment; these are noted in Table D-3 for the fluidized bed incinerator ash and the stabilized ash. These

alternatives or equivalents included the use of different sample preparation methods and/or different extraction techniques to reduce matrix interferences.

The accuracy determination for a constituent is based on the matrix spike recovery values. Tables D-4 and D-5 present the matrix spike recovery data for volatile, semivolatile, and metal constituents in nonwastewater residuals from fluidized bed incineration and fluidized bed incineration followed by ash stabilization. Table D-6 presents matrix spike data for metal constituents in wastewater residuals. Matrix spike data for organic constituents in wastewater residuals from incineration are presented in Reference 26 (K019).

Duplicate matrix spikes were performed for some volatile, semivolatile, and metal constituents in the residuals from fluidized bed incineration and fluidized bed incineration followed by stabilization. If duplicate matrix spikes were performed for an organic constituent, the matrix spike recovery used for that constituent was the lower of the two values from the first matrix spike and the duplicate spike.

Where a matrix spike was not performed for an organic constituent, a matrix spike recovery for that constituent was derived from the average matrix spike recoveries of the appropriate constituent group (volatile or semivolatile) for which recovery data were available. In these cases, the matrix spike recoveries for volatiles and semivolatiles from the first matrix spikes were averaged. Similarly, average matrix spike recoveries were calculated for

the duplicate matrix spike recoveries. The lower of the two average matrix spike recoveries of the volatile or semivolatile was used for any volatile or semivolatile constituent for which no matrix spike was performed. For example, no matrix spike was performed for di-n-butyl phthalate, a base/neutral fraction semivolatile in fluidized bed incinerator ash; however, the treatment performance data for this constituent were adjusted for accuracy using a matrix spike recovery of 67%. This recovery was selected after averaging the matrix spike recoveries calculated for all base/neutral fraction semivolatiles in the first matrix spike (69%) and the duplicate spike (67%). The lower average matrix spike recovery of 67% was selected to subsequently calculate the accuracy correction factor for di-n-butyl phthalate.

Where a matrix spike was not performed for a metal constituent in a TCLP extract, a matrix spike recovery for that constituent was derived from the average matrix spike recoveries for that metal constituent in TCLP extracts. For example, no matrix spike was performed for antimony in the cement sample from the stabilized fluidized bed incinerator ash. The percent recovery for this constituent was 74%, which is the average of the percent recoveries from the kiln dust sample and the fly ash sample for antimony.

The accuracy correction factors for volatile, semivolatile and metal constituents detected in the kiln ash and scrubber water residuals as well as untreated K019 are summarized in Table D-7 through D-9. Table D-7 presents the accuracy correction factors for constituents in the fluidized bed incinerator ash. Table D-8 presents accuracy correction factors for metals in the

stabilized fluidized bed incinerator ash. Table D-9 presents accuracy correction factors for metals in the fluidized bed incineration wastewater. Accuracy correction factors for organics in fluidized bed incineration wastewater are presented in Reference 26 (K019). The accuracy correction factors were determined for each constituent by dividing 100 by the matrix spike recovery for that constituent.

Table D-1

ANALYTICAL METHODS FOR REGULATED CONSTITUENTS IN K048-K052 NONWASTEWATER

FLUIDIZED BED INCINERATION

Total Composition

Regulated Constituent	Preparation Method	Analytical Method	References
Volatiles			
43. Toluene	Purge and Trap	Gas Chromatography/	1
215-217. Xylene (total)	(Method 5030)	Mass Spectrometry for Volatile Organics (Method 8240)	
Semivolatiles			
62. Benzo(a)pyrene			
70. Bis(2-ethylhexyl)phthalate			
80. Chrysene			
98. Di-n-butyl phthalate	Soxhlet Extraction	Gas Chromatography/	1
121. Naphthalene	(Method 3540)	Mass Spectrometry for	
141. Phenanthrene		Semivolatile Organics:	
145. Pyrene		Capillary Column Technique (Method 8270)	
Inorganics			
169. Cyanide		Colorimetric, Manual (Method 9010)	1

[1] Environmental Protection Agency, 1986. Test Methods for Evaluating Solid Waste, Third Edition, U.S. EPA, Office of Solid Waste and Emergency Response, November, 1986.

Table D-1 (Continued)

ANALYTICAL METHODS FOR REGULATED CONSTITUENTS IN K048-K052 NONWASTEWATER

STABILIZATION

TCLP Extract

Regulated Constituent	Preparation Method	Analytical Method	References
Metals			
155. Arsenic	51 Federal Register 40643, 11/7/86	Atomic Absorption, Furnace Technique (Method 7060)	
159. Chromium (total)		Inductively Coupled Plasma Atomic Emission Spectroscopy (Method 6010)	
161. Copper			
164. Nickel			
165. Selenium		Atomic Absorption, Furnace Technique (Method 7740)	
167. Vanadium		Inductively Coupled Plasma Atomic Emission Spectroscopy (Method 6010)	
168. Zinc			

[1] Environmental Protection Agency, 1986. Test Methods for Evaluating Solid Waste, Third Edition, U.S. EPA, Office of Solid Waste and Emergency Response, November, 1986.

Table D-2

Deviations from SW-846

Analysis	Method	SW-846 Specification	Deviation from SW-846 Method	Rationale for Deviation
Fluidized Bed Incineration				
Semivolatile Organic Constituents (Total Composition)	3540	Add 1.0 ml of solution containing 100 ug/ml of the acid surrogates and 200 ug/ml of the base/neutral surrogates. Additional amounts of the surrogates are added if high concentration samples are expected.	0.1 ml of solution containing 1,000 ug/ml of the acid surrogates and 2,000 ug/ml of the base/neutral surrogates were added to the samples. The final concentration of the surrogates in the extracts is the same as specified in SW-846.	
	8270	The internal standards recommended are 1,4-dichlorobenzene-d_4, napthalene-d_8, acenaphthene-d_{10}, phenanthrene-d_{10}, chrysene-d_{12}, and perylene-d_{12}. Other compounds may be used as internal standards as long as the requirements given in Paragraph 7.3.2 of the method are met. Each compound is dissolved with a small volume of carbon disulfide and diluted to volume with methylene chloride so that the final solvent is approximately 20% carbon disulfide. Most of the compounds are also soluble in small volumes of methanol, acetone, or toluene, except for perylene-d_{12}. The resulting solution will contain each standard at a concentration of 4,000 ng/uL. Each 1-mL sample extract undergoing analysis should be spiked with 10 uL of the internal standard solution, resulting in a concentration of 40 ng/uL of each internal standard.	The preparation of the internal standards was changed to eliminate carbon disulfide as a solvent. The internal standard concentration was changed to 50 ng/ul instead of 40 ng/ul. The standards were dissolved in methylene chloride only. Perylene-d_{12} dissolved in methylene chloride sufficiently to yield reliable results.	

Table D-3

SPECIFIC PROCEDURES OR EQUIPMENT USED IN ANALYSIS OF REGULATED CONSTITUENTS WHEN ALTERNATIVES OR EQUIVALENTS ARE ALLOWED IN THE SW-846 METHODS

Analysis	SW-846 Method	Remark	Alternatives or Equivalents Allowed by SW-846 Methods	Specific Procedures or Equipment Used
Fluidized Bed Incineration				
Volatile Organic Constituents (Total Composition)	5030	Sample Aliquot: 50 milliliters of liquid or 2 grams of solid	o The purge and trap device to be used is specified in the method in Figure 1, the desorber to be used is described in Figures 2 and 3, and the packing materials are described in Section 4.10.2. The method allows equivalents of this equipment or materials to be used.	o The purge and trap equipment, the desorber, and the packing materials used were as specified in SW-846.
			o The method specifies that the trap must be at least 25 cm long and have an inside diameter of at least 0.105 in.	o The length of the trap was 30 cm and and the diameter was 0.25 cm.
			o The surrogates recommended are toluene-d8, 4-bromofluorobenzene, and 1,2-dichloroethane-d4. The recommended concentration level is 0.25 ug/ml.	o All surrogates were added at the concentration recommended in SW-846.

Table D-3 (Continued)

SPECIFIC PROCEDURES OR EQUIPMENT USED IN ANALYSIS OF REGULATED CONSTITUENTS WHEN ALTERNATIVES OR EQUIVALENTS ARE ALLOWED IN THE SW-846 METHODS

Analysis	SW-846 Method	Remark	Alternatives or Equivalents for Equipment or in Procedure	Specific Equipment or Procedures Used
Fluidized Bed Incineration (Continued)				
Volatile Organic Constituents (Total Composition) (Continued)	8240	Sample Preparation Method: 5030	o Recommended GC/MS operating conditions: Electron energy: 70 vols (nominal) Mass range: 35-260 amu Scan time: To give 5 scans/peak but not to exceed 7 sec/scan Initial column temperature: 45°C Initial column holding time: 3 min Column temperature program: 8°C/min Final column temperature: 200°C Final column holding time: 15 min Injector temperature: 200-225°C Source temperature: According to manufacturer's specification Transfer line temperature: 250-300°C Carrier gas: Hydrogen at 50 cm/sec or helium at 30 cm/sec	o Actual GC/MS operating conditions: Electron energy: 70 ev Mass range: 35-350 amu Scan time: 2 sec/scan Initial column temperature: 10°C Initial column holding time: 5 min Column temperature program: 6°C/min Final column temperature: 160°C Final column holding time: 20 min Injector temperature: 220°C Source temperature: 250°C Transfer line temperature: 275°C Carrier gas: Helium @ 30 ml/min o Additional Information on Actual System Used: Equipment: Finnegan Mat model 5100 GC/MS/DS System Data system: SUPERINCOS[R] Mode: Electron impact NBS library available Interfact to MS - Jet separator
			o The column should be 6-ft x 0.1 in I.D. glass, packed with 1% SP-1000 on Cartopact B (60/80 mesh) or an equivalent.	o The column used was a capillary VOCOL which is 60 meters long and has an inner diameter of 0.75 mm and a 1.5 umd$_f$.
			o Samples may be analyzed by purge and trap technique or by direct injection.	o All samples were analyzed using the purge and trap technique.

Table D-3 (Continued)

SPECIFIC PROCEDURES OR EQUIPMENT USED IN ANALYSIS OF REGULATED CONSTITUENTS WHEN ALTERNATIVES OR EQUIVALENTS ARE ALLOWED IN THE SW-846 METHODS

Analyses	SW-846 Method	Remark	Alternatives or Equivalents Allowed by SW-846 Methods	Specific Procedures or Equipment Used
Fluidized Bed Incineration (Continued)				
Semivolatile Organic Constituents (Total Composition)			o The base/neutral surrogates recommended are 2-fluorobiphenyl, nitrobenzene-d5, and terphenyl-d4. The acid surrogates recommended are 2-fluorophenol, 2,4,6-tribromophenol, and phenol-d6. Additional compounds may be used for surrogates. The recommended concentrations for low medium concentrations level samples are 100 ug/ml for acid surrogates and 200 ug/ml for base/neutral surrogates. Volume of surrogates added may be adjusted.	o Surrogates were the recommended by SW-846 with the exception that phenol-d5 was substituted for phenol-d6. The concentrations of surrogates in the samples were 100 ug/ml of acid surrogates and 200 ug/ml of base/neutral surrogates.
	3540	Sample Aliquot: 10 grams of solid	o Sample grinding may be required for samples not passing through a 1 mm standard sieve or a 1 mm opening.	o Sample grinding was was not required.

Table D-3 (Continued)

SPECIFIC PROCEDURES OR EQUIPMENT USED IN ANALYSIS OF REGULATED CONSTITUENTS WHEN ALTERNATIVES OR EQUIVALENTS ARE ALLOWED IN THE SW-846 METHODS

Analysis	SW-846 Method	Remark	Alternatives or Equivalents for Equipment or in Procedure	Specific Equipment or Procedures Used
Fluidized Bed Incineration (Continued)				
Semivolatile Organic Constituents (Continued)	8270	Sample Preparation Method: 3520-Liquids 3540-Solids	o Recommended GC/MS operating conditions: Mass range: 35-500 amu Scan time: 1 sec/scan Initial column temperature: 40°C Initial column holding time: 4 min Column temperature program: 40-270°C at 10°C/min Final column temperature hold: 270°C. (until benzo(g,h,i) perylene has eluded) Injector temperature: 250-300°C Transfer line temperature: 250-300°C Source temperature: According to manufacturer's specification Injector: Grob-type, splitless Sample volume: 1-2 uL Carrier gas: Hydrogen at 50 cm/sec or helium at 30 cm/sec	o Actual GC/MS operating conditions: Mass range: 35-450 amu Scan time: 0.5 sec/scan Initial column temperature: 35°C Initial column holding time: 10°C min Column temperature program: 35°C @ 10°C/min Final column temperature hold: 275°C Injector temperature: 275°C Source temperature: 250°C Transfer line temperature: 275°C Source temperature 250°C Injector: Cool-on-column at 35°C Sample volume: 0.5 ul of sample extract Carrier gas: Hydrogen @ 50 cm/sec or helium at 30 cm/sec o Additional Information on Actual system Used: o Equipment: Hewelett Packard 5987A GC/M5 (Operators Manual Revision B) o Software Package: AQUARIUS NBS library available
			o The column should be 30 m by 0.25 mm I.D., 1-um film thickness silicon-coated fused silica capillary column (J&W Scientific DB-5 or equivalent).	o The column used was the J&W scientific DB-5 silica capillary column. It is 30 meters with a 0.32 mm capillary column inner diameter and a 0.25 um film.

Table D-3 (Continued)

SPECIFIC PROCEDURES OR EQUIPMENT USED IN ANALYSIS OF REGULATED CONSTITUENTS WHEN ALTERNATIVES OR EQUIVALENTS ARE ALLOWED IN THE SW-846 METHODS

Analysis	SW-846 Method	Remark	Alternatives or Equivalent Allowed by SW-846 Methods	Specific Procedures or Equipment Used
Fluidized Bed Incineration (Continued)				
Metal Constituents (TCLP)	6010	Equipment Used: ICPES-Applied Research Laboratories (ARL)-34000	o Operate equipment following instructions provided by instrument's manufacturer	o Equipment operated using procedures specified in the ARL-34000 ICP Software Guide and the ARL-34000 Programmer's Guide.
	7421	Equipment Used: Perkin Elmer 3030	o For operation with organic solvents, auxilliary argon gas inlet is recommended.	o Auxiliary argon gas was not required for sample matrices analyzed in this sampling episode.
			o Operate equipment following instruction provided by instrument's manufacturer.	o Equipment operated using procedures specified in Perkin Elmer 3030 Instruction Manual.
			o For background correction, use either continous correction or alternatives, e.g., Zeeman correction.	o Background detection was used. Continuous correct on Model 303.
			o If samples contain large amount of organic material, they should be oxidized by conventional acid digestion before being analyzed.	o Sample preparation was required to remove organics.

Table D-3

SPECIFIC PROCEDURES OR EQUIPMENT USED IN ANALYSIS OF REGULATED CONSTITUENTS WHEN ALTERNATIVES OR EQUIVALENTS ARE ALLOWED IN SW-846 METHODS

Analysis	SW-846 Method	Remark	Alternatives or Equivalents Allowed by SW-846 Methods	Specific Procedures or Equipment Used
Stabilization				
Metals Constituents (TCLP)	6010	Equipment Used: Perkin Elmer Plasma II Emission Spectrophotometer	o Operate equipment following instructions provided by instrument's manufacturer	o Equipment operated using procedures specified in operation manuals prepared by Perkin Elmer.
			o For operation with organic solvents, auxilliary argon gas inlet is recommended.	o Auxiliary argon gas was for sample analyses.

Table D-4

MATRIX SPIKE RECOVERIES FOR FLUIDIZED BED INCINERATOR ASH

Spike Constituent	Original Amount Found (ppm)	Amount Spiked (ppm)	Amount Recovered (ppm)	Percent* Recovery (%)
VOLATILES				
4. Benzene	<2	50	44	88
9. Chlorobenzene	<2	50	23	46
21. Dichlorodifluoromethane	***			
22. 1,1-Dichloroethane	<2	50	48	96
43. Toluene	<2	50	40	80
47. Trichloroethene	<2	50	38	76
215-217. Xylene (total)	***			
Average				77

Spike Constituent	Original Amount Found (ppm)	Amount Spiked (ppm)	Sample Result: Amount Recovered (ppm)	Sample Result: Percent* Recovery (%)	Duplicate Sample Result: Amount Recovered (ppm)	Duplicate Sample Result: Percent* Recovery (%)
SEMIVOLATILES (BASE/NEUTRAL FRACTION)						
52. Acenaphthene	<0.2	10	6.6	66	6.3	63
59. Benz(a)anthracene	**					
62. Benzo(a)pyrene	**					
70. Bis(2-ethylhexyl) phthalate	**					
80. Chrysene	**					
87. o-Dichlorobenzene	<0.2	10	7.5	75	7.6	76

*Percent recovery = 100 x $(C_i - C_o)/C_t$, where C_i = amount recovered, C_o = original amount found, and C_t = amount spiked.

**No matrix spike was performed for this constituent. The percent recovery for this constituent is based on the lower average percent recovery of the semivolatile (base/neutral) constituents. The lower average percent recovery is 67% from the duplicate sample.

***No matrix spike was performed for this constituent. The percent recovery is based on the average percent recovery for the volatile constituent. This value is 77%.

Table D-4 (Continued)

MATRIX SPIKE RECOVERIES FOR FLUIDIZED BED INCINERATOR ASH

Spike Constituent	Original Amount Found (ppm)	Amount Spiked (ppm)	Sample Result Amount Recovered (ppm)	Sample Result Percent* Recovery (%)	Duplicate Sample Result Amount Recovered (ppm)	Duplicate Sample Result Percent* Recovery (%)
98. Di-n-Butyl phthalate	**					
102. 2,4-Dinitrotoluene	<5.0	50	27	54	26	52
105. Di-N-propylnitrosamine	<0.5	50	35	70	35	70
109. Fluorene	**					
121. Naphthalene	**					
141. Phenanthrene	**					
145. Pyrene	<0.2	10	5.8	58	5.3	53
150. 1,2,4-Trichlorobenzene	<0.5	10	9	90	8.6	86
Average				69		67
INORGANICS						
169. Cyanide	<0.51	0.10	0.104	104	--	--
171. Sulfide	<50	523	418	82	--	--

**No matrix spike was performed for this constituent. The percent recovery for this constituent is based on the lower average percent recovery of the semivolatile (base/neutral) constituents. The lower average percent recovery is 67% from the duplicate sample.

Table D-4 (Continued)

MATRIX SPIKE RECOVERIES FOR FLUIDIZED BED INCINERATOR ASH

Spike Constituent	Original Amount Found (ppm)	Amount Spiked (ppm)	Sample Result: Amount Recovered (ppm)	Sample Result: Percent* Recovery (%)	Duplicate Sample Result: Amount Recovered (ppm)	Duplicate Sample Result: Percent* Recovery (%)
METALS (TCLP EXTRACT)						
154. Antimony	+			74		
155. Arsenic	+			136		
156. Barium	+			93		
157. Benyllium	+			76		
158. Cadmium	+			75		
159. Chromium (total)	+			80		
221. Chromium (hexavalent)	+			63		
160. Copper	+			88		
161. Lead	+			83		
163. Nickel	+			73		
164. Selenium	+			81		
165. Silver	+			75		
166. Thallium	+			59		
167. Vanadium	+			77		
168. Zinc	+			74		

+No matrix spike was performed for this constituent. The percent recovery is the average percent recovery from cement, kiln dust, and lime and fly ash TCLP extract for the stabilized ash for this contituent. Table D-5 presents the data for the percent recoveries for cement, kiln dust, and lime and fly ash.

*Percent recovery = 100 x $(C_i - C_o)/C_t$, where C_i = amount recovered, C_o = original amount found, and C_t = amount spiked.

Table D-5

MATRIX SPIKE RECOVERIES FOR THE TCLP EXTRACT FOR STABILIZED FLUIDIZED BED INCINERATOR ASH

CEMENT

CONSTITUENTS (ppm)	Cement: Run 2 Original Amount Found (ppm)	Amount Spiked (ppm)	Amount Recovered (ppm)	Percent Recovery* (%)
BDAT METALS				
154. Antimony	**			74
155. Arsenic	<0.004	0.1	0.136	136
156. Barium	**			93
157. Beryllium	**			76
158. Cadmium	**			75
159. Chromium (total)	**			80
221. Chromium (hexavalent)	**			63
160. Copper	**			88
161. Lead	<0.006	1.0	0.994	99
163. Nickel	**			73
164. Selenium	0.022	0.05	0.064	84
165. Silver	**			75
166. Thallium	0.009	1.0	0.612	61
167. Vanadium	**			77
168. Zinc	**			74

*Percent recovery = 100 x $(C_i - C_o)/C_t$, where C_i = amount recovered, C_o = original amount found, and C_t = amount spiked.

**No matrix spike was performed for this constituent. The percent recovery is the average of percent recoveries from kiln dust and lime and fly ash for this constituent. This average is shown in the percent recovery column.

Table D-5 (Continued)

MATRIX SPIKE RECOVERIES FOR THE TCLP EXTRACT FOR STABILIZED FLUIDIZED BED INCINERATOR ASH

KILN DUST

CONSTITUENTS (ppm)	Kiln Dust: Run 1 Original Amount Found (ppm)	Amount Spiked (ppm)	Amount Recovered (ppm)	Percent Recovery* (%)	Kiln Dust: Run 3 Original Amount Found (ppm)	Amount Spiked (ppm)	Amount Recovered (ppm)	Percent Recovery* (%)
BDAT METALS								
154. Antimony	<0.163	1.0	0.66	66	<0.163	1.0	0.815	82
155. Arsenic	**				0.005	0.1	0.137	132
156. Barium	0.203	1.0	1.103	90	0.204	1.0	1.15	91
157. Beryllium	<0.001	1.0	0.706	71	<0.001	1.0	0.845	85
158. Cadmium	<0.003	1.0	0.694	69	<0.003	1.0	0.834	83
159. Chromium (total)	1.78	1.0	2.532	75	1.87	1.0	2.744	87
221. Chromium (hexavalent)	**				2.13	1.0	3.15	102
160. Copper	<0.003	1.0	0.721	72	<0.003	1.0	1.17	117
161. Lead	**				<0.006	1.0	0.765	77
163. Nickel	<0.018	1.0	0.675	68	<0.018	1.0	0.816	82
164. Selenium	0.044				0.04	0.05	0.0776	75
165. Silver	<0.006	1.0	0.70	70	<0.006	1.0	0.838	84
166. Thallium	**				0.009	1.0	0.573	56
167. Vanadium	1.53	1.0	1.968	44	1.56	1.0	2.498	94
168. Zinc	0.048	1.0	0.755	71	0.031	1.0	0.871	84

*Percent recovery = 100 x $(C_i - C_o)/C_t$, where C_i = amount recovered, C_o = original amount found, and C_t = amount spiked.

**No matrix spike was performed for this constituent for run 1.

Table D-5 (Continued)

MATRIX SPIKE RECOVERIES FOR THE TCLP EXTRACT FOR STABILIZED FLUIDIZED BED INCINERATOR ASH

LIME AND FLY ASH

CONSTITUENTS (ppm)	Lime and Flyash: Run: 3			
	Original Amount Found (ppm)	Amount Spiked (ppm)	Amount Recovered (ppm)	Percent Recovery* (%)
BDAT METALS				
154. Antimony	<0.163	1.0	0.751	75
155. Arsenic	0.006	0.1	0.146	140
156. Barium	0.599	1.0	1.568	97
157. Beryllium	<0.001	1.0	0.728	73
158. Cadmium	<0.003	1.0	0.722	72
159. Chromium (total)	1.08	1.0	1.846	77
221. Chromium (hexavalent)	0.171	1.0	0.403	23
160. Copper	0.006	1.0	0.749	74
161. Lead	<0.006	1.0	0.72	72
163. Nickel	<0.018	1.0	0.698	70
164. Selenium	0.017	0.05	0.059	85
165. Silver	<0.006	1.0	0.726	73
166. Thallium	<0.001	1.0	0.583	58
167. Vanadium	0.156	1.0	1.092	94
168. Zinc	0.052	1.0	0.734	68

*Percent recovery = 100 x $(C_i - C_o)/C_t$, where C_i = amount recovered, C_o = original amount found, and C_t = amount spiked.

Table D-6

MATRIX SPIKE RECOVERIES FOR METALS IN WASTEWATER RESIDUALS

Spike Constituent	Original Amount Found (ppb)	Amount Spiked (ppb)	Sample Recovery: Amount Recovered (ppb)	Sample Recovery: Percent Recovery (%)	Duplicate Sample Result: Amount Recovered (ppb)	Duplicate Sample Result: Percent Recovery* (%)
159. Chromium (total)	<4.0	50	35	70	34	68
161. Lead	<5.0	25	22	88	19	76
168. Zinc	2,640	10,000	12,600	100	12,400	98

*Percent recovery = 100 x $(C_i - C_o)/C_t$, where C_i = amount recovered, C_o = original amount found, and C_t = amount spiked.

Table D-7

SUMMARY OF ACCURACY CORRECTION FACTORS FOR NONWASTEWATER

(Fluidized Bed Incineration)

Constituent	Accuracy Correction Factor*	
	Total Concentration	TCLP
21. Dichlorodifluoromethane	1.30	
43. Toluene	1.25	
Xylene	1.30	
59. Benz(a)anthracene	1.49	
62. Benzo(a)pyrene	1.49	
70. Bis(2-ethylhexyl)phthalate	1.49	
80. Chrysene	1.49	
98. Di-n-butyl phthalate	1.49	
109. Fluorene	1.49	
121. Naphthalene	1.49	
141. Phenanthrene	1.49	
145. Pyrene	1.89	
154. Antimony		1.35
155. Arsenic		0.74
156. Barium		1.08
157. Beryllium		1.32
158. Cadmium		1.33
159. Chromium (total)		1.25
160. Copper		1.14
161. Lead		1.20
163. Nickel		1.34
164. Selenium		1.23
165. Silver		1.33
167. Vanadium		1.30
168. Zinc		1.35
169. Cyanide	0.96	
171. Sulfide	1.22	

*The Accuracy Correction Factor is equal to 1 divided by the Percent Recovery.

Table D-8

SUMMARY OF ACCURACY CORRECTION FACTORS FOR NONWASTEWATER

(Stabilization)

		Accuracy Correction Factor*		
	Constituent	Cement	Kiln Dust	Lime and Fly Ash
154.	Antimony	1.35	1.36	1.33
155.	Arsenic	0.74	0.76	0.71
156.	Barium	1.10	1.10	1.03
157.	Beryllium	1.32	1.29	1.37
158.	Cadmium	1.33	1.31	1.39
159.	Chromium	1.25	1.23	1.31
160.	Copper	1.34	1.06	1.35
161.	Lead	1.01	1.31	1.39
163.	Nickel	1.37	1.34	1.43
164.	Selenium	1.19	1.33	1.18
165.	Silver	1.33	1.30	1.38
167.	Vanadium	1.30	1.45	1.07
168.	Zinc	1.35	1.29	1.47

*The Accuracy Correction Factor is equal to 1 divided by the Percent Recovery.

Table D-9

SUMMARY OF ACCURACY CORRECTION FACTORS FOR METALS IN WASTEWATER

(Chromium Reduction Followed by Lime and Sulfide Precipitation and Vacuum Filtration)

Constituent	Accuracy Correction Factor*
159. Chromium (total)	1.47
162. Lead	1.32
164. Zinc	1.02

*The Accuracy Correction Factor is equal to 1 divided by the Percent Recovery.

APPENDIX E

STRIP CHARTS FOR THE SAMPLING EPISODE AT PLANT A

PRESSURE DIFFERENTIALS AND INCINERATION TEMPERATURES

Figure E-1: Constriction Plate and Bed Pressure Differentials

Figure E-2: Bed and Freeboard Temperatures

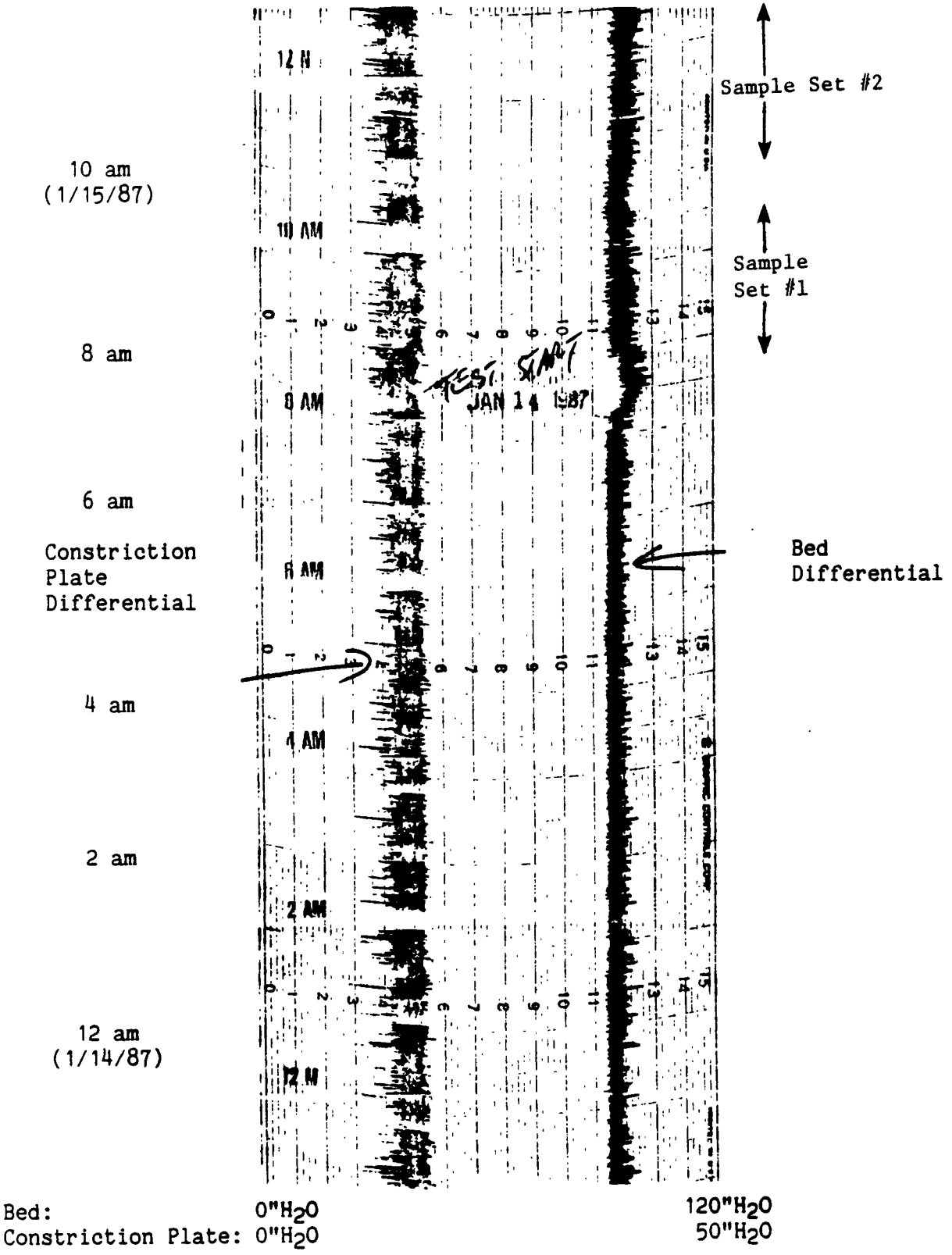

Figure E-1

CONSTRICTION PLATE AND BED PRESSURE DIFFERENTIALS (inches of H_2O)

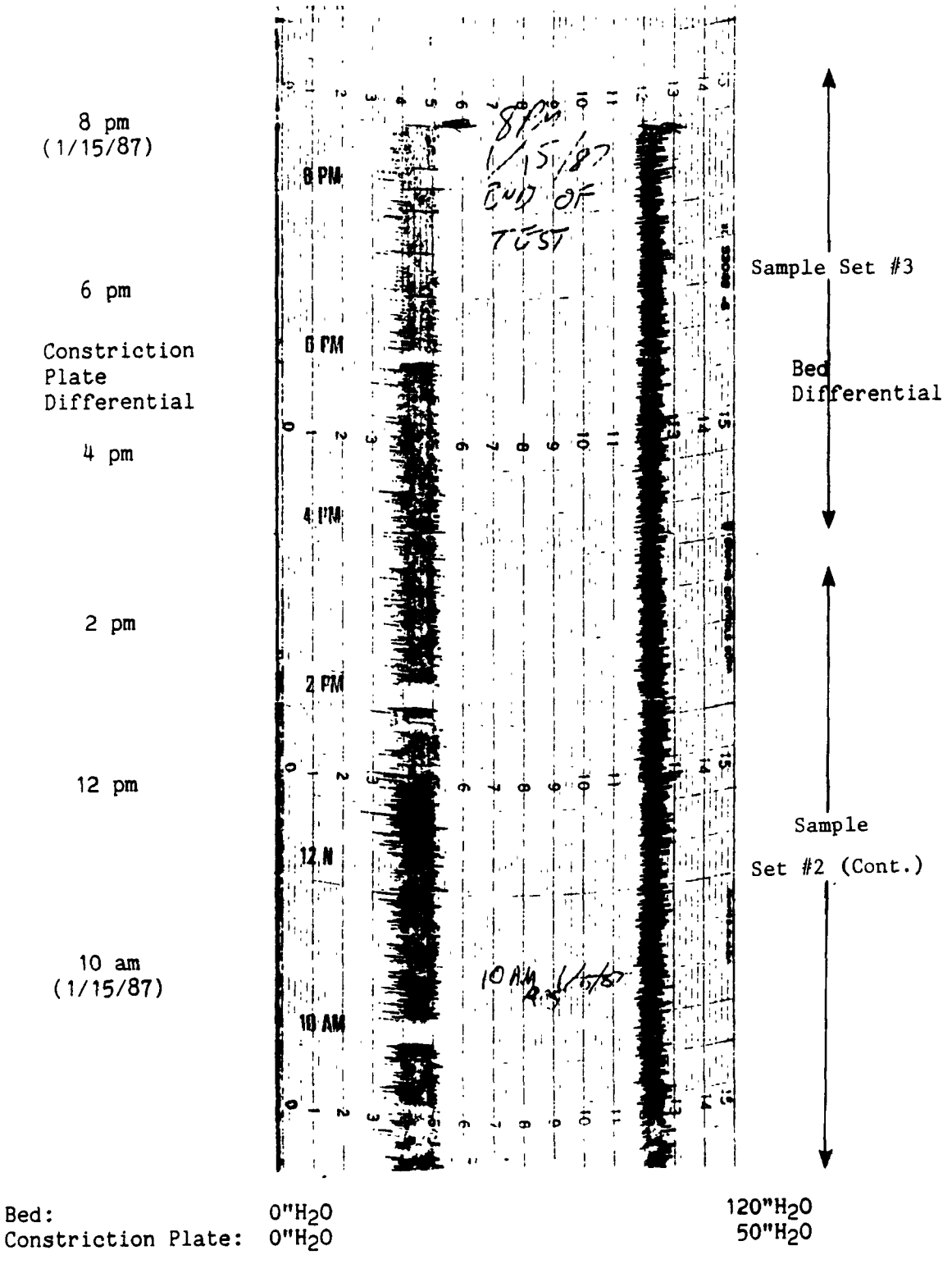

Figure E-1

CONSTRICTION PLATE AND BED PRESSURE DIFFERENTIALS (inches of H_2O)
(Continued)

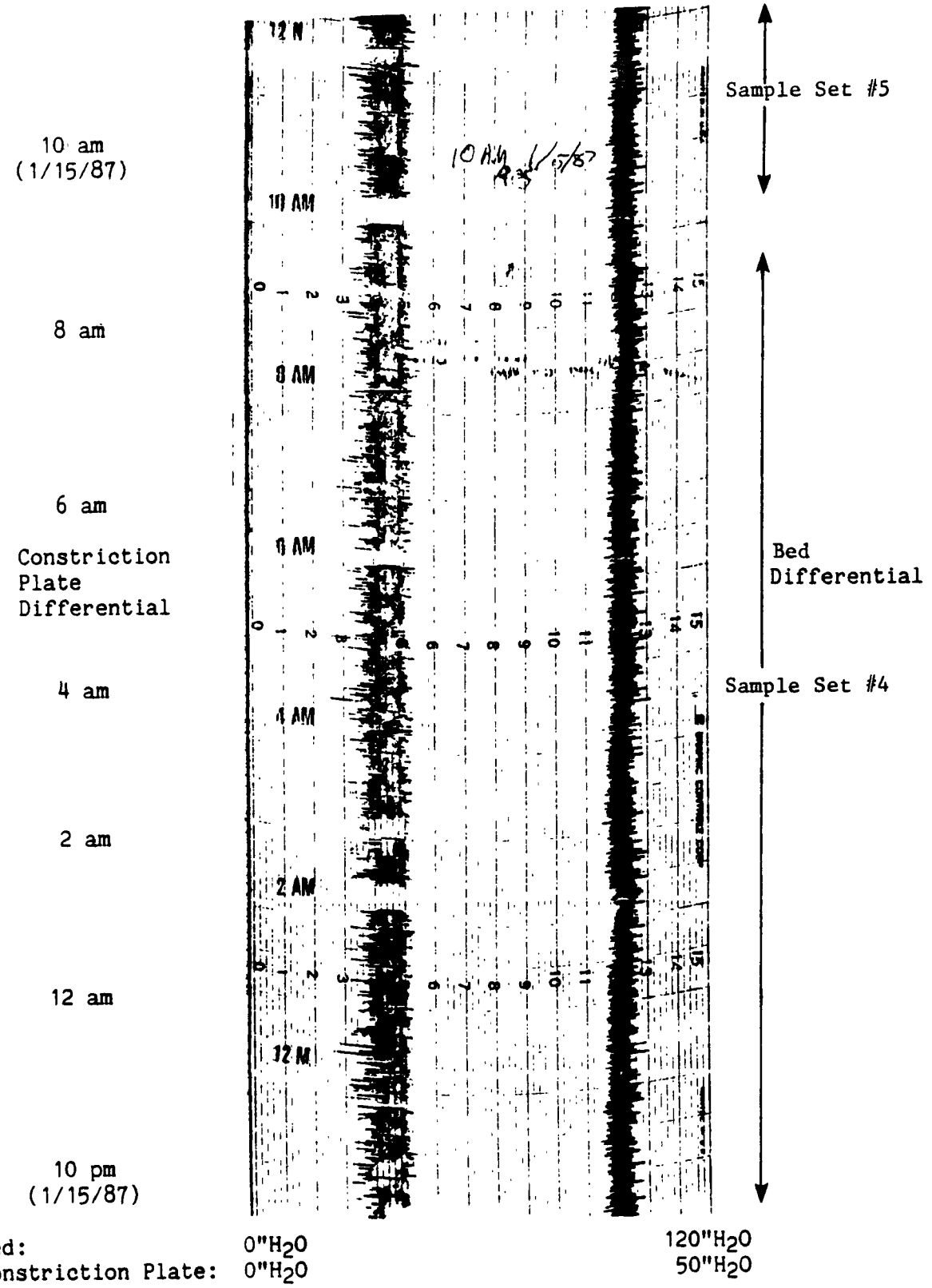

Figure E-1

CONSTRICTION PLATE AND BED PRESSURE DIFFERENTIALS (inches of H_2O)
(Continued)

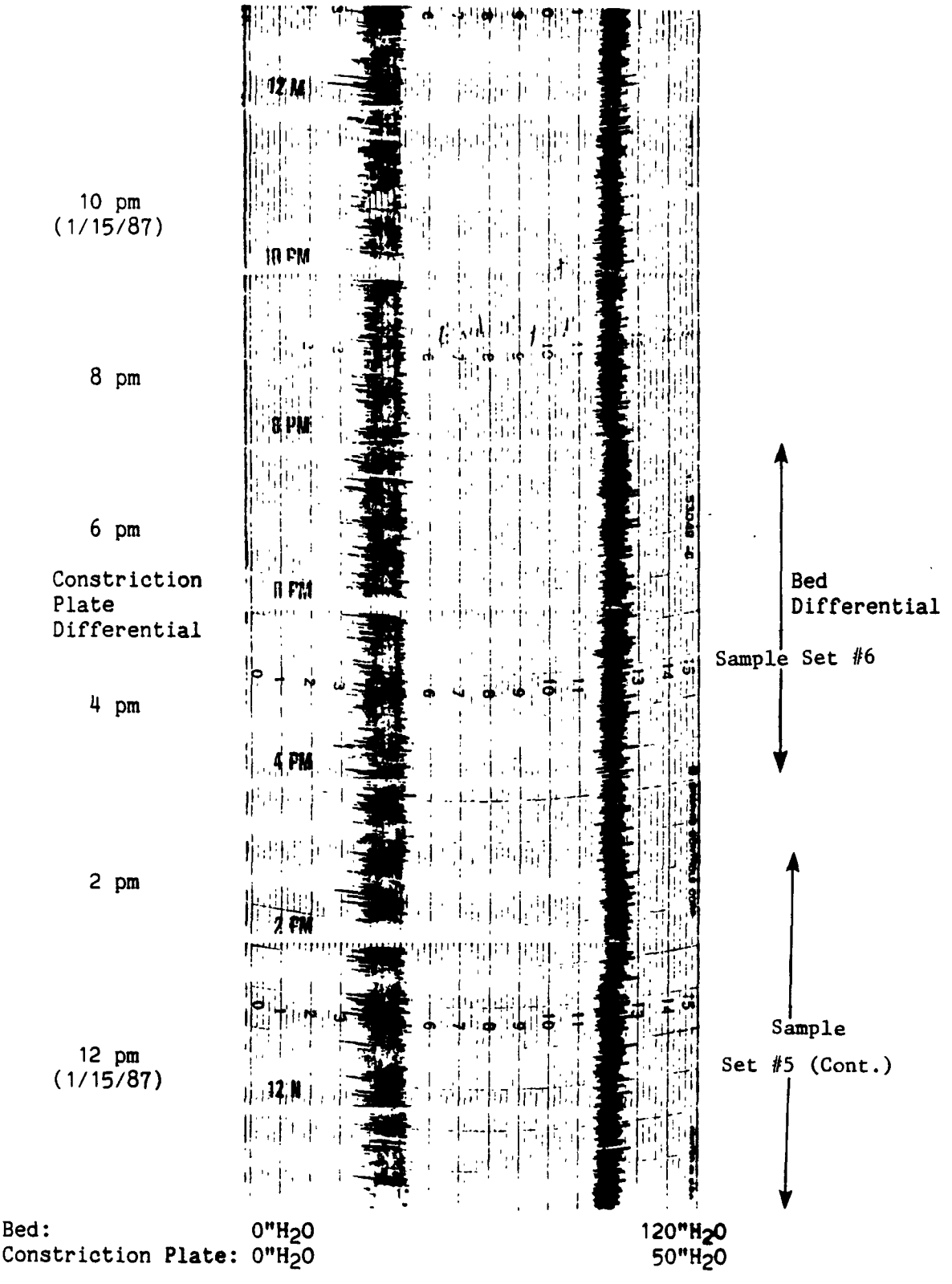

Figure E-1

CONSTRICTION PLATE AND BED PRESSURE DIFFERENTIALS (inches of H_2O)
(Continued)

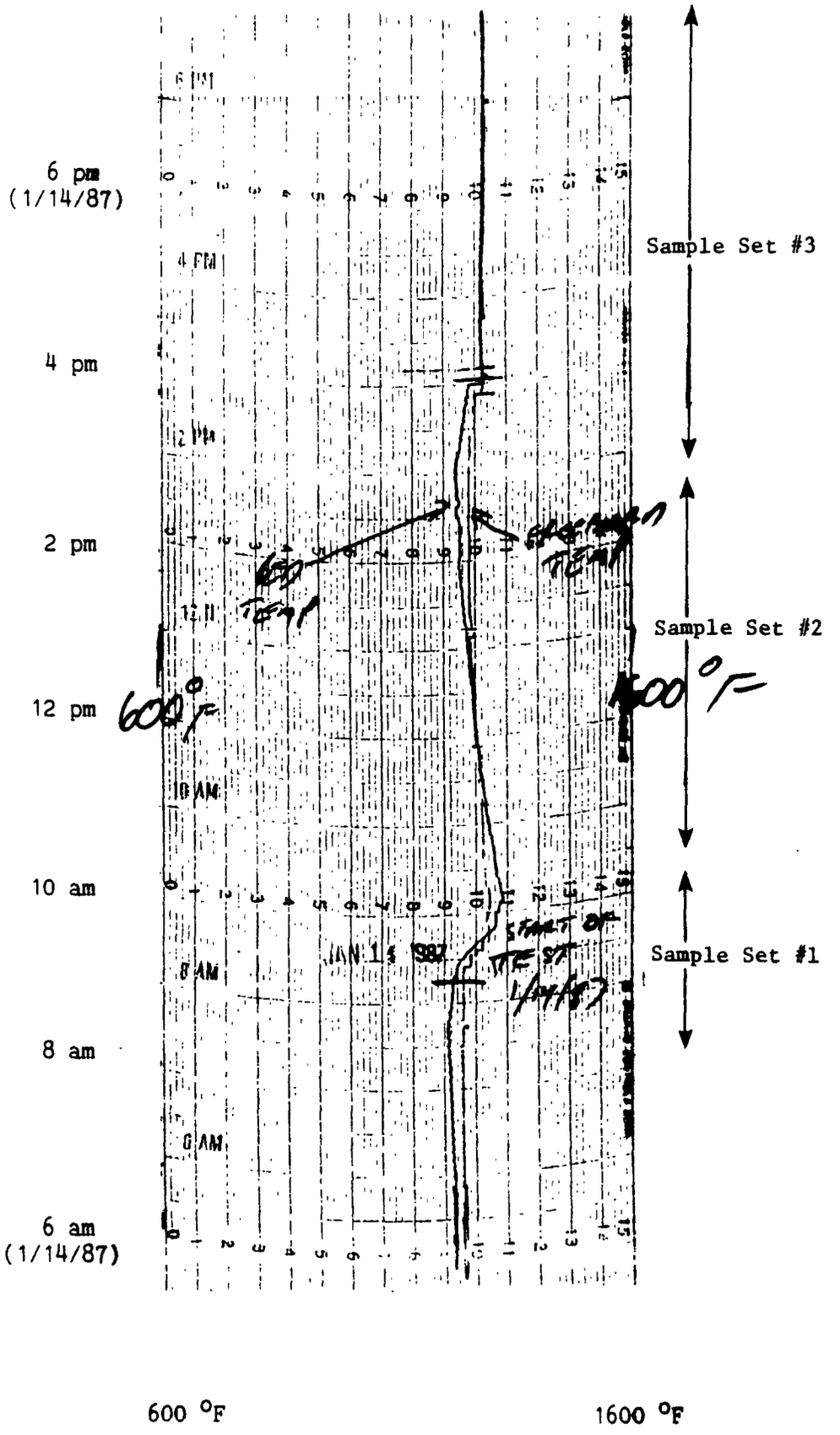

Figure E-2

BED AND FREEBOARD TEMPERATURES (°F)

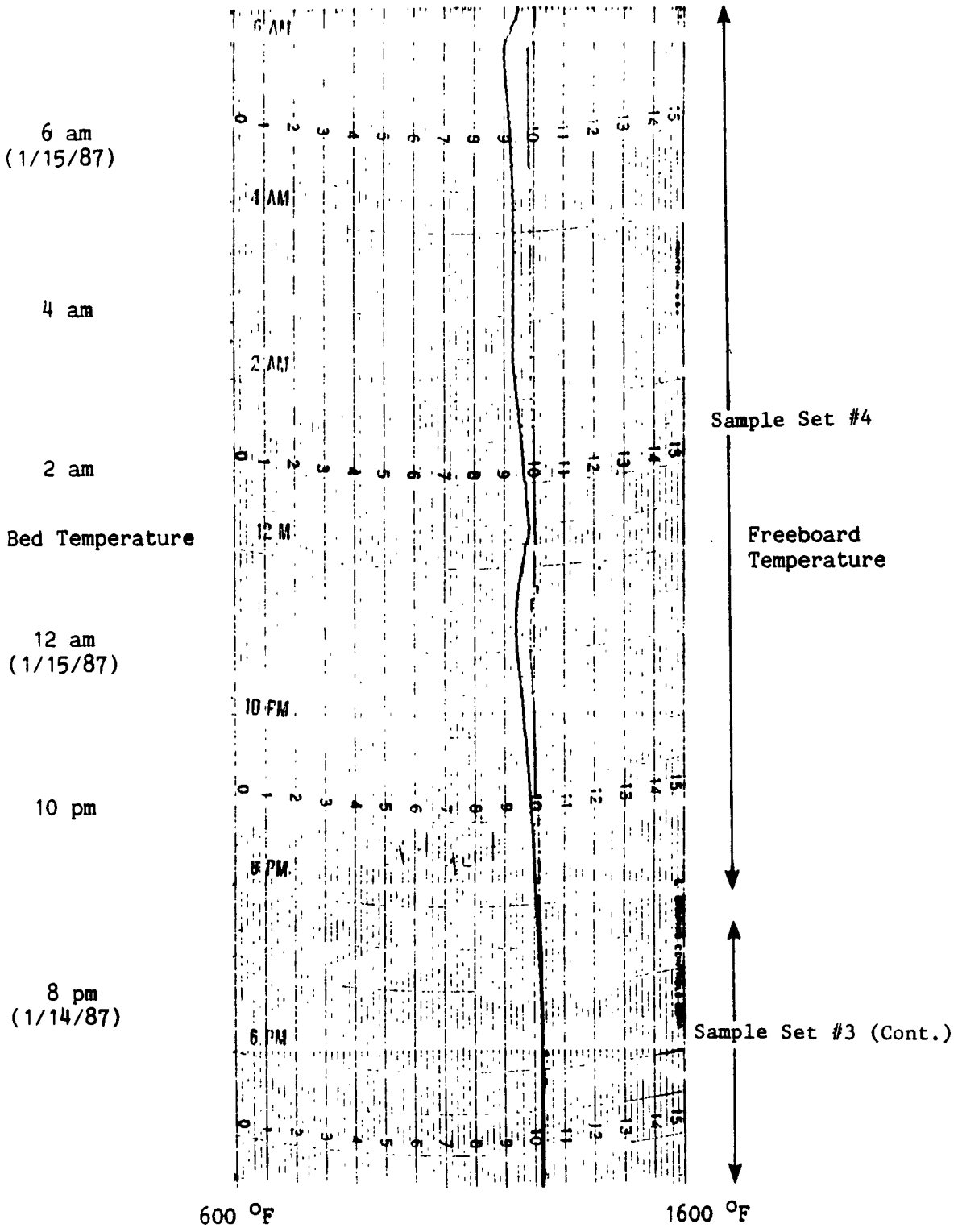

Figure E-2

BED AND FREEBOARD TEMPERATURES (°F)
(Continued)

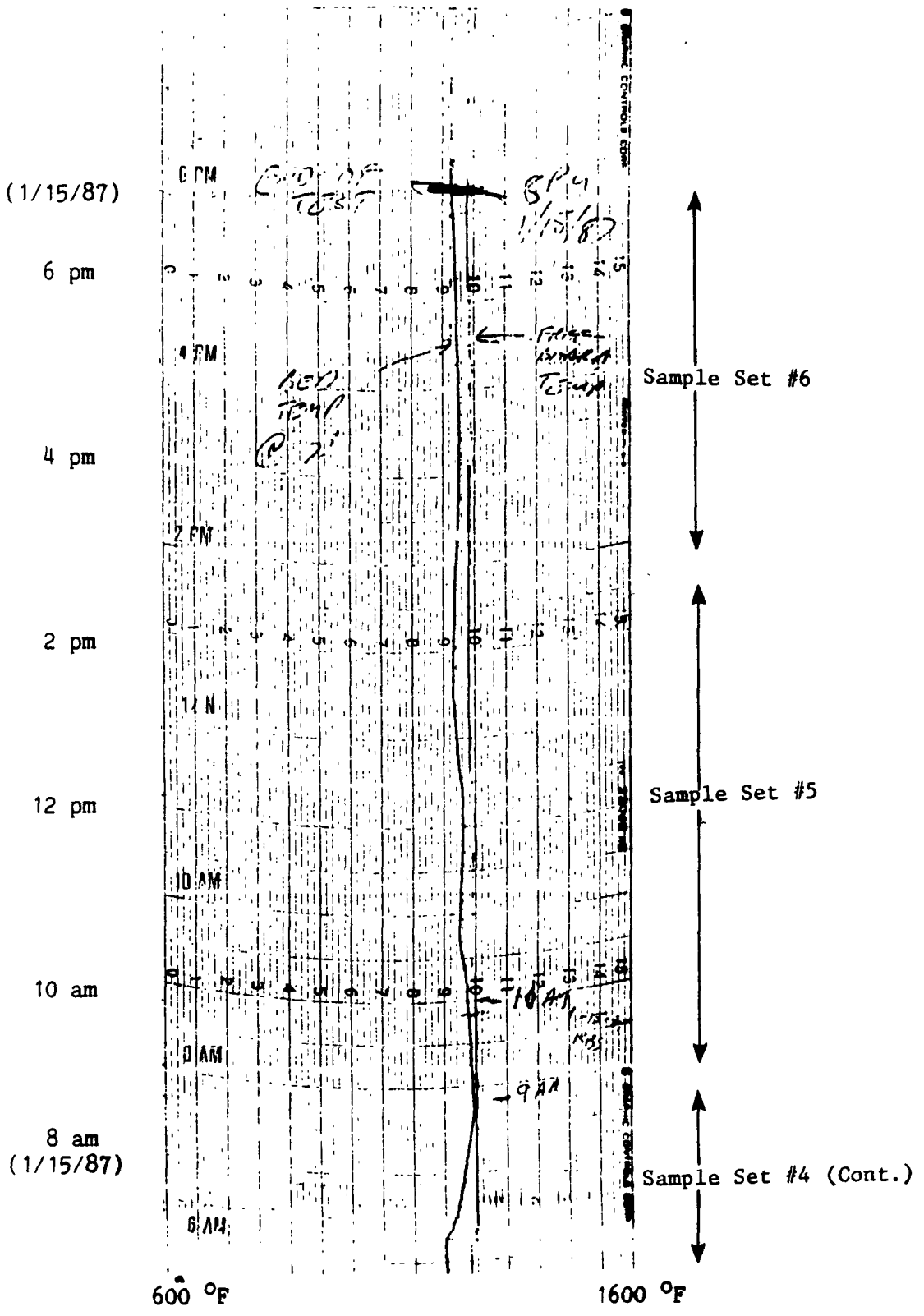

Figure E-2

BED AND FREEBOARD TEMPERATURES (°F)
(Continued)

Appendix F

OTHER TREATMENT DATA

Appendix F contains treatment data for K048-K052 wastes which were not used in the development of treatment standards. Table F-1 is an index of all data presented in this appendix.

Table F-1

INDEX OF TREATMENT DATA

Facility	Section	Page
Plant B - API Report	F.1	F-2
Plant C - API Report	F.2	F-4
Plant D - API Report	F.3	F-6
Plant E - API Report	F.4	F-8
Plant F - API Report	F.5	F-9
Plant G - RCC Report	F.6	F-10
Plant H - API Report	F.7	F-20
Plant K - SOHIO Report	F.8	F-24
Plant L - CF Systems Report	F.9	F-32

F.1 Treatment Data for Plant B (K051)

PRESSURE FILTRATION (BELT FILTER PRESS)

Detected BDAT List Constituents+	Untreated K051 Waste TCLP mg/L (ppm)	Treated Waste Filter Cake TCLP mg/L (ppm)
VOLATILES		
4. Benzene	15	0.62
226. Ehtyl benzene	23	0.18
43. Toluene	66	1.5
215-217. Xylene (total)	127	1.2
SEMIVOLATILES		
57. Anthracene	1.0	<0.015
59. Benzo(a)anthracene	0.61	<0.015
62. Benzo(a)pyrene	0.3	<0.015
80. Chrysene	1.0	<0.015
96. 2,4-Dimethylphenol	<0.15	0.03
108. Fluoranthene	0.4	<0.015
121. Naphthalene	4.6	0.14
141. Phenanthrene	7.3	<0.015
145. Pyrene	1.6	<0.015
METALS		
155. Arsenic	0.02	0.02
156. Barium	1.2	0.26
159. Chromium	0.15	0.01
161. Lead	0.13	<0.04

+Analyses were not performed for all BDAT list organic and metal constituents.

Design and Operating Parameters	Operating Range*
Sludge feed rate (gpm)	21.5
Dilution water feed rate (gpm)	3
Polymer solution concentration (wt%)	1.3
Polymer solution feed rate (gpm)	1.5
Belt tension (psi)	200
Belt speed	
Gravity section (ft/min)	20
Pressure section (ft/min)	35

*Design values were not presented in the API report.

F.2 Treatment Data for Plant C (Specific Waste Codes Not Reported)

PRESSURE FILTRATION (BELT FILTER PRESS)

Detected BDAT List Constituents+	Untreated Waste* TCLP mg/L (ppm)	Treated Waste Filter Cake TCLP mg/L (ppm)
VOLATILES		
4. Benzene	91	1.3
226. Ehtyl benzene	100	<0.06
43. Toluene	460	2.2
215-217. Xylene (total)	400	1.8
SEMIVOLATILES		
57. Anthracene	13	<0.01
59. Benzo(a)anthracene	5.4	<0.01
62. Benzo(a)pyrene	4.4	<0.01
80. Chrysene	8.6	<0.01
81. ortho-Cresol	<2.5	0.02
96. 2,4-Dimethylphenol	BDL	0.04
108. Fluoranthene	4.9	<0.01
121. Naphthalene	77	0.1
141. Phenanthrene	102	<0.01
145. Pyrene	17	BDL
METALS		
156. Barium	7.7	1.0
159. Chromium (total)	3.9	<0.025
161. Lead	1.1	<0.1

*The untreated waste consists of petroleum refinery wastes (the specific waste codes were not reported).

+Analyses were not performed for all BDAT list organic and metal constituents.

BDL = Below detection limit.

Design and Operating Parameters	Operating Range*
Sludge feed rate (gpm)	61-75
Washwater feed rate (gpm)	100
Washwater pressure (psig)	96
Feed temperature (^{o}F)	85
Polymer solution concentration (wt%)	1.5
Polymer solution feed rate (gph)	225-230
Belt tension	
Top Belt (psig)	11
Bottom Belt (psig)	12

*Design values were not presented in the API report.

F.3 Treatment Data for Plant D (K048, K049, K051)

PRESSURE FILTRATION (PLATE FILTER PRESS)

Detected BDAT List Constituents+	Untreated Waste* TCLP mg/L (ppm)	Treated Waste Filter Cake TCLP mg/L (ppm)
VOLATILES		
4. Benzene	130	1.9
226. Ethyl benzene	240	1.2
43. Toluene	360	4.1
215-217. Xylene (total)	750	3.6
SEMIVOLATILES		
80. Chrysene	20	<0.01
121. Naphthalene	310	0.25
141. Phenanthrene	23	<0.01
145. Pyrene	42	<0.01
METALS		
155. Arsenic	<0.07	0.01
156. Barium	1.5	0.82
159. Chromium (total)	1.1	<0.025
161. Lead	0.5	<0.1

*The untreated waste is a mixture of K048, K049, K051, and miscellaneous oily materials.

+Analyses were not performed for all BDAT list organic and metal constituents.

Design and Operating Parameters	Operating Range*
Fill time** (min)	12
Filtration time (min	225
Cake release time (min)	20
Plate Filter Press temperature (^{o}F)	145
Final Feed Pressure (psig)	210
Lime Dosage (% of total sludge feed)	2.5
Type of filter cloth	satin weave nylon

*Design values were not presented in the API report.

**At sludge feed rate of 565 gpm.

F.4 Treatment Data for Plant E (K051 and K052)

PRESSURE FILTRATION (PLATE FILTER PRESS)

Detected BDAT List Constituents+	Untreated Waste* TCLP mg/L (ppm)	Treated Waste Filter Cake TCLP mg/L (ppm)
VOLATILES		
4. Benzene	2.7	0.80
226. Ethyl benzene	0.29	0.22
43. Toluene	3.5	2.2
215-217. Xylene (total)	1.71	1.42
SEMIVOLATILES		
81. ortho-Cresol	0.33	0.02
96. 2,4-Dimethylphenol	0.10	0.01
121. Naphthalene	0.16	0.16
141. Phenanthrene	0.01	0.00
142. Phenol	0.85	0.10
METALS		
155. Arsenic	0.01	0.00**
156. Barium	0.95	0.57
162. Mercury	0.00	<0.001

Design and Operating Parameters

No data were submitted

*The untreated waste consists of K051, K052 and unleaded tank bottoms. These wastes were conditioned with lime before sampling.

**Value was reported as 0.00.

+Analyses were not performed for all BDAT list organic and metal constituents.

F.5 Treatment Data for Plant F (K049 and K051)

SOLVENT EXTRACTION

Detected BDAT List Constituent+	Untreated Waste* TCLP mg/L (ppm)	Treated Waste Extracted Residual TCLP mg/L (ppm)
VOLATILES		
4. Benzene	42	0.01
43. Toluene	240	0.01
215-217. Xylene (total)	320	0.01
SEMIVOLATILES		
121. Naphthalene	59	0.01
141. Phenanthrene	75	<0.005
METALS		
159. Chromium (total)	0.39	0.11
161. Lead	0.47	0.05

Design and Operating Parameters

No data were submitted

*The untreated waste is a mixture of K049 and K051 waste.

+Analyses were not performed for all BDAT list organic and metal constituents.

F.6 Treatment Data for Plant G (K048 - K052)

SOLVENT EXTRACTION

Detected Constituents	Untreated Waste Total Composition (mg/kg)	Untreated Waste TCLP (mg/l)	Treated Waste (solids)** Total Composition (mg/kg)	Treated Waste (solids)** TCLP (mg/l)
Organics				
80. Chrysene	4.7	<0.01	NA	<0.01
	4.5			
	5.6			
	<3.0			
* N-Nitrosodiphenylamine	5.6	<0.01	NA	<0.01
	4.8			
	7.5			
	8.3			
	<3.0			
* Isophorone	36	<0.01	NA	<0.01
	<3.0			
* 2-Methylnaphthalene	37	<0.01	NA	<0.01
	22	0.011		
	47			
	50			
	<3.0			
141. Phenanthrene	13	<0.01	NA	<0.01
	13			
	16			
	17			
	<3.0			
109. Fluorene	3.4	<0.01	NA	<0.01
	4.2			
	<3.0			
121. Naphthalene	22	<0.01	NA	<0.01
	28	0.023		
	30	0.027		
	<3.0			
142. Phenol	4.5	<0.01	NA	0.035
	<3.0	0.11		0.041
		0.12		0.040
				0.056
				0.025
				0.033
				0.013
				0.018
				0.017

Detected Constituents	Untreated Waste Total Composition (mg/kg)	Untreated Waste TCLP (mg/l)	Treated Waste (solids)** Total Composition (mg/kg)	Treated Waste (solids)** TCLP (mg/l)
4. Benzene	NA	<0.025	NA	0.050
		0.030		0.028
		0.040		
266. Ethyl benzene	NA	0.029	NA	0.052
		0.043		0.060
		<0.025		0.054
				0.096
				0.120
				0.140
				0.059
				0.042
* Methyl-2-pentanone	NA	0.054	NA	0.052
		0.062		0.059
		<0.05		
43. Toluene	NA	0.14	NA	0.17
		0.19		0.26
		<0.025		0.18
				0.35
				0.42
				0.56
				0.22
				0.16
				0.09
				0.11
45. 1,1,1-Trichloroethane	NA	0.027	NA	
		0.044		
		<0.025		
215-217. Xylene (total)	NA	0.14	NA	0.28
		0.19		0.31
		<0.025		0.31
				0.51
				0.71
				0.72
				0.31
				0.21
				0.17
				0.097
87. 1,2-Dichlorobenzene	3.3	<0.01	NA	<0.01
	<3.0			

Detected Constituents	Untreated Waste Total Composition (mg/kg)	Untreated Waste TCLP (mg/l)	Treated Waste (solids)** Total Composition (mg/kg)	Treated Waste (solids)** TCLP (mg/l)
108. Fluoranthene	3.7	<0.01	NA	<0.01
	<3.0			
70. Bis(2-ethylhexyl) phthalate	<3.0	0.13	NA	<0.01
	49	<0.01		
96. 2,4-Dimethylphenol	<3.0	0.081	NA	0.019
		0.11		0.016
		<0.01		0.013
				0.018
				0.013
				0.013
				0.011
				0.011
* 4-Methyl phenol	<3.0	0.21	NA	0.037
		0.26		0.057
		<0.01		0.053
				0.071
				0.060
				0.029
				0.057
				0.045
				0.05
				0.044
222. Acetone	NA	0.27	NA	<0.12
		<0.12		
34. Methyl ethyl ketone	NA	0.13	NA	<0.12
		<0.12		
47. Trichloroethene	NA	0.037	NA	0.030
		<0.025		<0.025
* 2-Methyl phenol	<3.0	0.010	NA	<0.01
		<0.01		
145. Pyrene	3.6	<0.01		<0.01
	<3.0			
* Triethylamine	NA	NA	9700	
			7700	
			7400	
			<2000	

Detected Constituents	Untreated Waste Total Composition (mg/kg)	Untreated Waste TCLP (mg/l)	Treated Waste (solids)** Total Composition (mg/kg)	Treated Waste (solids)** TCLP (mg/l)
PCB's				
203. Aroclor 1242	5.1	<0.0024	0.37	<0.0012
	2.7		<0.2	
	4.8			
	2.1			
	4.1			
	3.9			
	1.8			
	3.2			
	3.7			
	1.3			
	4.6			
	4.9			
	3.8			
	3.4			
	3.4			
	1.5			
	8.7			
	<0.32			
206. Aroclor 1260	3.5	<0.005	<0.4	<0.0005
	1.9			
	2.9			
	1.4			
	1.9			
	1.8			
	1.5			
	1.8			
	1.8			
	0.55			
	2.3			
	2.3			
	2.0			
	1.4			
	2.2			
	2.8			
	2.6			
	<0.64			

Detected Constituents	Untreated Waste Total Composition (mg/kg)	Untreated Waste TCLP (mg/l)	Treated Waste (solids)** Total Composition (mg/kg)	Treated Waste (solids)** TCLP (mg/l)
Other constituents				
170. Fluoride	NA	1.3	NA	NA
		<0.5		
* Oil and grease	NA	NA	8700	<100
			10000	
			8900	
			8120	
			7760	
			8880	
			5830	
			<100	
Metals				
* Aluminum	460	<0.7	2300	1.1
	340	11	<10	1.0
	380	6.1		1.3
	380			1.5
	420			1.9
	330			1.7
	390			2.4
	420			1.6
	420			2.1
	470			<0.3
	430			
	380			
	370			
	380			
	360			
	420			
	350			
	<5.0			
156. Barium	210	0.01	140	<0.03
	190	0.62	<1.0	
	250	0.13		
	260			
	320			
	160			
	270			
	370			
	310			
	220			

Detected Constituents	Untreated Waste Total Composition (mg/kg)	Untreated Waste TCLP (mg/l)	Treated Waste (solids)** Total Composition (mg/kg)	Treated Waste (solids)** TCLP (mg/l)
156. Barium (continued)	360			
	200			
	180			
	200			
	160			
	230			
	180			
	<0.5			
159. Chromium (total)	6.2	<0.02	18	<0.05
	5	0.09	<2	
	6	0.07		
	6			
	7			
	5			
	7			
	7			
	7			
	5			
	7			
	7			
	6			
	7			
	6			
	6			
	5			
	<1			
160. Copper	23	<0.02	100	<0.03
	23		<2	
	24			
	24			
	24			
	21			
	25			
	30			
	27			
	21			
	27			
	29			
	26			
	24			
	24			
	23			
	24			
	<0.6			

Detected Constituents	Untreated Waste Total Composition (mg/kg)	Untreated Waste TCLP (mg/l)	Treated Waste (solids)** Total Composition (mg/kg)	Treated Waste (solids)** TCLP (mg/l)
* Iron	680	<0.1	4000	1.8
	670	36	<10	1.6
	750	19		2.8
	740			3.0
	770			4.7
	660			4.1
	740			5.3
	770			5.0
	750			7.1
	720			<0.3
	770			
	750			
	710			
	700			
	670			
	710			
	670			
	<5			
161. Lead	2700	<0.04	21300	5.9
	2700	5.1	<4	5.2
	4000	4.2		11
	3100			4.2
	3600			4.0
	2200			4.0
	3400			4.9
	4300			12
	3700			<0.1
	2800			
	4100			
	3300			
	3200			
	2900			
	2700			
	2900			
	3200			
	<5			
* Manganese	5.5	<0.01	23	0.44
	4.2	0.3	<1.0	0.43
	5.4	0.16		0.45
	4.9			0.44
	5.3			0.52
	4.6			0.49
	5.2			0.49
	5.0			0.54
	4.9			0.61

Detected Constituents	Untreated Waste Total Composition (mg/kg)	Untreated Waste TCLP (mg/l)	Treated Waste (solids)** Total Composition (mg/kg)	Treated Waste (solids)** TCLP (mg/l)
* Manganese (continued)	4.7			<0.03
	5.4			
	5			
	4.9			
	4.5			
	4.4			
	4.4			
	4.4			
	<0.5			
168. Zinc	310	<0.02	930	22
	280	16	<2	21
	300	11		22
	300			22
	320			25
	270			25
	310			26
	330			30
	310			33
	280			<0.05
	350			
	330			
	320			
	310			
	300			
	280			
	300			
	<1			
158. Cadmium	0.7	NA	NA	NA
	<0.5			
* Calcium	740	NA	NA	NA
	<10			
* Magnesium	110	NA	NA	NA
	<10			
162. Mercury	<0.05	<0.001	<0.001	0.007
				0.002
				<0.001

Detected Constituents	Untreated Waste		Treated Waste (solids)**	
	Total Composition (mg/kg)	TCLP (mg/l)	Total Composition (mg/kg)	TCLP (mg/l)
164. Selenium	<4	<0.008	<0.004 <8	0.008 0.020 <0.04
* Sodium	2900 <5	NA	NA	NA
* Strontium	2.4 <0.5	NA	NA	NA
167. Vanadium	2 <1	NA	NA	NA

* Not a BDAT constituent.

** Treated waste (solids) stream values do not necessarily correspond to the untreated waste stream values.

*** TCLP values of treated waste (solids) do not necessarily correspond to the total composition values presented for the treated waste (solids).

NA Not analyzed

F.7 Treatment Data for Plant H (K048 - K052)

(a) THERMAL DRYING (Specific Waste Codes Not Reported)

Detected BDAT List Constituents+	Untreated Waste* TCLP mg/L (ppm)	Treated Waste Filter Cake Residue TCLP mg/L (ppm)	
		350°F	550°F
VOLATILES			
4. Benzene	1.1	<0.005	<0.05
43. Toluene	1.8	<0.005	<0.05
SEMIVOLATILES			
81. ortho-Cresol	0.02	BDL	0.89
96. 2,4-Dimethylphenol	0.04	0.01	0.06
121. Naphthalene	0.15	0.13	----
141. Phenanthrene	BDL	0.01	0.13
142. Phenol	BDL	0.01	0.05
		350°F	550°F
METALS			
155. Arsenic	BDL	0.01	<0.04
156. Barium	1.0	BDL	0.57
159. Chromium (total)	BDL	0.1	0.04

*The untreated waste is the filter cake from the belt filter press at plant C generated from treatment of petroleum refinery wastes (the specific waste codes were not specified).

+Analyses were not performed for all BDAT organic and metal constituents.

BDL = Below Detection Limit.

Design and Operating Parameters	Operating Range*	
	350°F	550°F
Temperature of heat transfer fluid (°F)	450	650
Retention time (min)	50	36-42

*Design values were not presented in the API report.

(b) THERMAL DRYING (K051 and K052)

Detected BDAT List Constituents+	Untreated Waste* TCLP mg/L (ppm)	Treated Waste Filter Cake Residue TCLP mg/L (ppm)	
		350°F	550°F
VOLATILES			
4. Benzene	0.8	0.01	<0.025
43. Toluene	2.2	0.08	<0.03
SEMIVOLATILES			
70. Bis(2-ethylhexyl)phthalate	BDL	BDL	0.012
81. ortho-Cresol	0.02	0.02	0.02
96. 2,4-Dimethylphenol	0.01	0.03	<0.005
121. Naphthalene	0.16	0.06	0.01
141. Phenanthrene	0.00**	<0.01	<0.005
142. Phenol	0.1	0.16	0.08
METALS			
155. Arsenic	0.00	0.01	<0.1
156. Barium	0.57	0.8	1.3
158. Cadmium	BDL	BDL	0.02

*The untreated waste is the filter cake from the plate filter press at plant E generated from treatment of K051, K052, and unleaded tank bottoms. These wastes were conditioned with lime prior to filtration.

**Value was reported as 0.00.

+Analyses were not performed for all BDAT organic and metal constituents.

BDL = Below Detection Limit.

Design and Operating Parameters	Operating Range*	
	350°F	550°F
Temperature of heat transfer fluid (°F)	450	650
Retention time (min)	50	36-42

*Design values were not presented in the API report.

F.8 Treatment Data for Plant K (Specific Waste Codes Not Reported)

SOLVENT EXTRACTION FOLLOWED BY STABILIZATION

Table 1 SOHIO Data

Constituent	Untreated Waste TCLP (mg/l)	Treated Waste TCLP (mg/l)
Volatile Organics		
Benzene	16	<0 025
	51	<0 025
	42	<0 025
	9 7	<0 025
	16	<0 025
	20	<0 025
		<0 025
		<0 025
		<0 025
		<0 025
Ethyl Benzene	5 7	<0 025
	12.	<0 025
	28	<0 025
	7 5	<0 025
	6 8	<0 025
	8 5	<0 025
		<0 025
		<0 025
		<0 025
		<0.025
Toluene	22	<0 025
	33	<0 025
	54	<0 025
	17	<0 025
	24	<0 025
	30	<0 025
		<0 025
		<0 025
		<0 025
		<0 025
Xylenes, m	1 3	0 056
	27	<0 025
	36	<0 025
	12	<0 025
	17	0 033
	20	<0 025
		0 041
		0 062
		0 050
		0 055

Table 1 SOHIO Data (continued)

Constituent	Untreated Waste TCLP (mg/l)	Treated Waste TCLP (mg/l)
Volatile Organics (continued)		
Xylenes, o'p	15	0 37
	21.	<0.025
	26	0 046
	9 9	<0 025
	13	0 12
	16.	0 064
		0.091
		0 099
		0 068
		0 13
Base Neutral Organics		
Anthracene	<0 013	<0 01
	1.2	<0.01
	0.45	<0.01
	5.2	<0 01
	<0 4	<0.01
	<1.3	<0.01
		<0 01
		<0 01
		<0.01
		<0.01
Benz(a)anthracene	0 014	<0 01
	0 78	<0 01
	0.36	<0 01
	4 6	<0 01
	<0 4	<0 01
	2 2	<0 01
		<0 01
		<0 01
		<0 01
		<0 01
Benzo(a)pyrene	<0 013	<0 01
	0.51	<0 01
	0 21	<0 01
	3.5	<0 01
	<0.04	<0 01
	1.5	<0 01
		<0.01
		<0 01
		<0 01
		<0 01

Table 1 SOHIO Data (continued)

Constituent	Untreated Waste TCLP (mg/l)	Treated Waste TCLP (mg/l)
Base/Neutral Organics (continued)		
Naphthalene	0 47	0 85
	4 2	0.021
	2 5	0.084
	28	0 023
	3 2	0 022
	7 3	0 046
		0.11
		0 10
		0 058
		0.050
Phenanthrene	0 25	<0 01
	4 7	<0 01
	2 5	<0.01
	4.6	<0.01
	8 9	<0 01
	24	<0 01
		<0.01
		<0 01
		<0 01
		<0 01
Pyrene	0.051	<0.01
	1 5	<0.01
	0 65	<0 01
	9 4	<0 01
	1 7	<0 01
	4 1	<0 01
		<0 01
		<0 01
		<0 01
		<0 01
Acid Organics		
2,4-Dimethylphenol	0 061	<0 01
	<0 3	<0 01
	<0 2	<0 01
	<3.	<0 01
	<0.4	<0.01
	<1 3	<0 01
		<0 01
		<0 01
		<0 01
		<0 01

Table 1 SOHIO Data (continued)

Constituent	Untreated Waste TCLP (mg/l)	Treated Waste Total (mg/kg)	Treated Waste TCLP (mg/l)
Acid Organics (continued)			
Phenol	0.017		<0.01
	<0.3		<0.01
	<0.2		<0 01
	<3		<0 01
	<0.4		<0.01
	<1.3		<0.01
			<0 01
			<0 01
			<0.01
			<0.01
Metals			
Antimony		15	
		15	
		22	
		19	
		27	
		22	
		11	
		<10	
		<10	
		18	
Arsenic	<0 03	11	0 016
	0.01	9.8	0 008
	<0.03	11	0.028
	<0 03	10	0 022
	<0 8	13	0 026
	<0 03	8 8	0 018
		12	0 024
		12	0 024
		10	<0 006
		14	<0 006
Barium	1.4	650	<1
	1 8	810	<1
	1 4	800	<1
	5.3	990	<1
	2 3	1,300	<1
	3 4	940	1
		880	<1
		800	<1
		760	<1
		3,200	<1

Table 1 SOHIO Data (continued)

Constituent	Untreated Waste TCLP (mg/l)	Treated Waste Total (mg/kg)	Treated Waste TCLP (mg/l)
Metals (continued)			
Beryllium		0.3	
		0.2	
		0.4	
		0.3	
		0 3	
		0.4	
		0.3	
		0.3	
		0 3	
		0.3	
Cadmium		0 8	
		1.3	
		1.4	
		<0.8	
		1 0	
		1 6	
		1.1	
		1.9	
		1 2	
		1 9	
Chromium	0 12	510	<0.05
	2 4	590	<0 05
	1 7	610	<0 05
	14	650	<0 05
	5.9	820	<0 05
	10	620	<0 05
		650	<0 05
		570	<0.05
		550	0 11
		820	<0 05
Cobalt	<0.02	11	<0.05
	0 04	24	0.34
	0 06	12	0 05
	0 02	12	<0 05
	0.04	12	0.05
	0.02	18	0 09
		9 7	0 07
		8 7	<0.05
		12	0.27
		12	0 21

Table 1 SOHIO Data (continued)

Waste Constituent	Untreated Waste TCLP (mg/l)	Treated Total (mg/kg)	 TCLP (mg/l)
Metals (continued)			
Lead		33	
		31	
		42	
		27	
		36	
		27	
		37	
		28	
		39	
Mercury		1 3	
		1 5	
		2 2	
		1.8	
		2.1	
		2 0	
		2.5	
		2 1	
		1.0	
		2 0	
Nickel	<0.08	51	<0.2
	0 16	58	0 8
	0.12	51	<0.2
	0.27	41	<0 2
	0 13	45	<0.2
	<0 1	56	0.2
		50	<0.2
		43	<0 2
		42	0 7
		53	0.6
Selenium		<0 4	
		<0 4	
		<0 4	
		<0.4	
		<0 4	
		<0 4	
		2.7	
		3 1	
		2 3	
		1 6	

Table 1 SOHIO Data (continued)

Waste Constituent	Untreated Waste TCLP (mg/l)	Treated Total (mg/kg)	Treated TCLP (mg/l)
Metals (continued)			
Vanadium		42	
		30	
		43	
		34	
		36	
		40	
		34	
		34	
		30	
		36	

nd = indicates not detected
< = following values are detection limits

F.9 Treatment Data for Plant L (K051)

SOLVENT EXTRACTION

CF SYSTEMS
CORPORATION

March 30, 1987

CF Systems Units to Render Refinery Wastes Non-Hazardous

The CFS Extraction Process is a solvent extraction technique which, instead of using a typical solvent such as methylene chloride, toluene or hexane, uses a liquefied gas such as CO_2, propane, or other light hydrocarbon gas. These solvents have high solubilities for most organic compounds that are listed as hazardous. They are also inexpensive, non-toxic and can be relatively easily separated from the extracted compounds. These properties, together with CF Systems proprietary equipment design, lead to a highly effective broadly applicable process with low operating costs. In general, the CF Systems units can extract over 99% of liquid hydrocarbons from liquids and sludges having solids and hydrocarbons content in any ratio.

PROCESS DESCRIPTION

A simplified block flow diagram is shown in Figure 1.

Sludge Excavation and Conditioning

For small pits, an open impeller sludge pump is used to slurry the contents of the pit and pump it to the mixing and conditioning tanks. For larger pits, a dredge will be used followed by a booster pump to allow the slurry to be pumped from the pit to the mixing and conditioning tanks.

The intent of the mixing/conditioning tanks is to produce a homogeneous mixture capable of being pumped to the solvent extraction unit. The homogeneous slurry is pumped from the mixing/conditioning tank to the solvent extraction unit. Out of the mixing/conditioning tanks the solids size will be adjusted or classified using a grinder, screens and/or strainers. Particle conditioning is necessary to ensure stable operations in the solvent extraction unit.

FIGURE 1

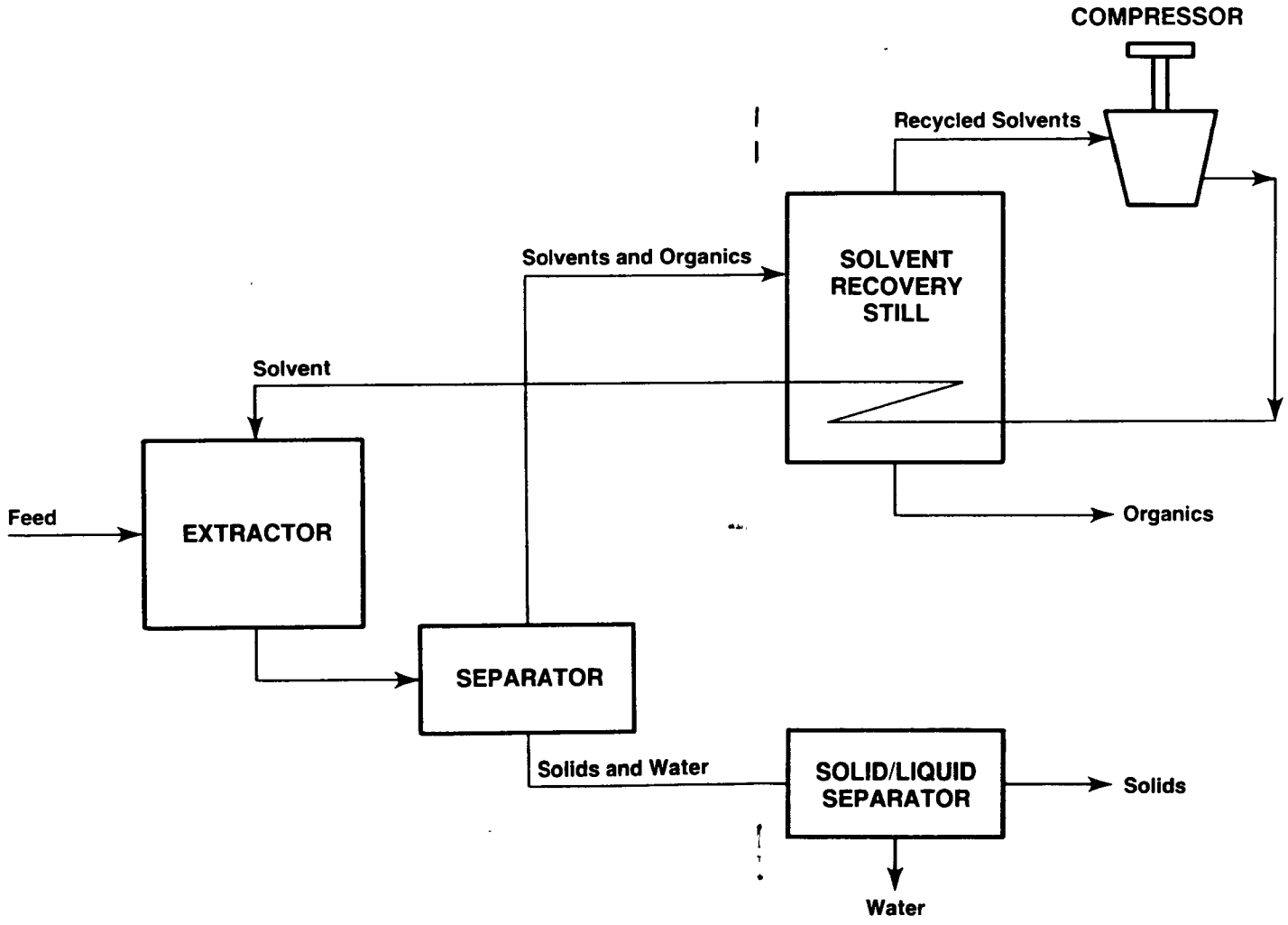

FLOW DIAGRAM
PIT CLEAN-UP UNIT

PROCESS DESCRIPTION (Continued)

Solvent Extraction

The solvent extraction unit has three basic parts. First, there is extraction, followed by phase separations and finally, solvent recovery. The solvent for this unit is a liquefied, light hydrocarbon gas.

The phase separations are accomplished with a combination of settling and filtrations. The water solvent separation takes place in the decanting step after the separator.

The solvent is recovered from the solvent recovery still as the oil is concentrated. This step uses an energy efficient vapor-recompression cycle in which the evaporator feed pressure is reduced and the highly volatile solvent is flashed and removed overhead. The clean solvent vapors are recompressed. The heat from the recompression and the compressed-gas latent heat are used to vaporize the solvent.

Products

The oil product can either be recycled to the refinery operations, used as fuel extenders or incinerated depending on its compositions and the exigencies of each situation.

The residual solids from this unit are firm and well consolidated. The solids will pass the paint filter test; i.e., there will be no free liquids in the solids.

The water product is suitable for sending to a waste water treatment system or to a retention pond.

Richard Ce

PRODUCT SPECIFICATIONS AND ANALYSIS

The results of total oil and grease content of several treated refinery solids are given in Table 1. These results give a general indication of the ability of the CFS process to extract organics from a variety of solids.

Detailed and extensive analysis, including the EPA's Toxicity Characteristic Leaching Procedure (TCLP) have been carried out on two refinery samples. Both are API Separator Bottom Sludge (EPA Waste # K050).

As these results show in Table 2, the concentration of the toxic organics and metals in the leachate are substantially lower than the standards established by EPA to date.

TABLE 1

Total Oil and Grease Content of Treated Solids

	Component	Oil and Grease (%)
1. Oil Contaminated Refinery Soil	Feed Residue Solids	34.3 0.6
2. Refinery Sludge (60% Solids)	Feed Residue Solids	20.0 2.6
3. API Separator Bottoms	Feed Residue Solids	5.0 0.2
4. Filter Cake From Refinery Pit	Feed Residue Solids	12.0 0.5

TABLE 2
Analytical Results for API Separator Bottom Sludge Extraction

		API Separator Bottom Sludge #1	
	UNITS	FEED	TREATED SOLID
MATERIAL BALANCE:			
Oil & Grease	mg/kg	NA	520 (50)
Oil	wt.%	3.1	NA
Water	wt.%	41.7	NA
Solids	wt.%	57.4	NA
TOTAL METALS			
Chromium	mg/kg	400 (0.5)	560 (1)
Lead	mg/kg	1100 (2)	1300 (2)
TCLP METALS			
Chromium	mg/L		0.02 (0.01)
Lead	mg/L		0.31 (0.04)
TOTAL PURGEABLE ORGANICS			
Benzene	ug/kg	5100 (1100)	60 (50)
Ethylbenzene	ug/kg	13000 (2200)	130 (100)
Toluene	ug/kg	52000 (2200)	440 (100) ppb
Xylene, m	ug/kg	49000 (2200)	340 (100)
Xylene, o & p	ug/kg	22000 (4500)	250 (100)
TCLP PURGEABLE ORGANICS			
Benzene	mg/L		ND (0.0005)
Ethylbenzene	mg/L		ND (0.001)
Toluene	mg/L		0.0027 (0.001)
Xylene, m	mg/L		ND (0.001)
Xylene, o & p	mg/L		ND (0.002)
TOTAL PNAs AND PHENOLS			
Anthracene	mg/kg	ND (3.0)	ND (0.3)
Chrysene	mg/kg	ND (57)	ND (0.1)
Naphthalene	mg/kg	50 (36)	0.1 (0.07)
Phenanthrene	mg/kg	20 (18)	0.16 (0.03)
Phenols	mg/kg	ND (1800)	ND (3.4)
TCLP PNAs AND PHENOLS			
Anthracene	mg/L		ND (0.0001)
Chrysene	mg/L		ND (0.0002)
Naphthalene	mg/L		0.0005 (0.0002)
Phenanthrene	mg/L		0.0015 (0.0001)
Phenols	mg/L		ND (0.057)

NA = Not Available ND = Not Detected ( ) = Detection Level

TABLE 2 (Continued)
Analytical Results for API Separator Bottom Sludge Extraction

		API Separator Bottom Sludge #2	
	UNITS	FEED	TREATED SOLID
MATERIAL BALANCE:			
Oil & Grease	mg/kg	NA	740 (50)
Oil	wt.%	11.1	NA
Water	wt.%	44.5	NA
Solids	wt.%	43.8	NA
TOTAL METALS			
Chromium	mg/kg	68 (1)	200 (3)
Lead	mg/kg	110 (4)	280 (10)
TCLP METALS			
Chromium	mg/L		0.33 (0.03)
Lead	mg/L		0.2 (0.1)
TOTAL PURGEABLE ORGANICS			
Benzene	ug/kg	4600 (1300)	80 (50)
Ethylbenzene	ug/kg	ND (2500)	170 (100)
Toluene	ug/kg	11000 (2500)	360 (100)
Xylene, m	ug/kg	42000 (2500)	560 (100)
Xylene, o & p	ug/kg	14000 (5100)	720 (200)
TCLP PURGEABLE ORGANICS			
Benzene	mg/L		0.0015 (0.0005)
Ethylbenzene	mg/L		ND (0.001)
Toluene	mg/L		0.0032 (0.001)
Xylene, m	mg/L		0.0014 (0.001)
Xylene, o & p	mg/L		ND (0.002)
TOTAL PNAs AND PHENOLS			
Anthracene	mg/kg	ND (24)	ND (0.04)
Chrysene	mg/kg	ND (656)	ND (0.3)
Naphthalene	mg/kg	62 (37)	0.15 (0.04)
Phenanthrene	mg/kg	510 (19)	0.55 (0.02)
Phenols	mg/kg	ND (1900)	ND (2)
TCLP PNAs AND PHENOLS			
Anthracene	mg/L		ND (0.0009)
Chrysene	mg/L		ND (0.001)
Naphthalene	mg/L		0.002 (0.002)
Phenanthrene	mg/L		0.004 (0.001)
Phenols	mg/L		ND (0.010)

NA = Not Available ND = Not Detected ( ) = Detection Level

Appendix G

ANALYSIS OF VARIANCE RESULTS

Table G-1 ANOVA for solvent extraction and fluidized bed incineration.

Table G-2 ANOVA for fluidized bed incineration and stabilization.

Table G-1

ANALYSIS OF VARIANCE RESULTS FOR COMPARING FLUIDIZED BED INCINERATION AT PLANT A AND SOLVENT EXTRACTION AT PLANT K (REPORT 2)

Analysis of Variance for Xylene

Source	Degrees of freedom	Sum of Squares	Mean Squares	F Ratio	Critical F Value
Between Groups	1	0.1178	0.1178	0.2757	4.6
Within Groups	14	5.9806	0.4272		
Total	15	6.0984			

Analysis of Variance for Naphthalene

Source	Degrees of freedom	Sum of Squares	Mean Squares	F Ratio	Critical F Value
Between Groups	1	45.1891	45.1891	339.7616	4.67
Within Groups	13	1.7289	0.1330		
Total	14	46.9181			

Table G-2

ANALYSIS OF VARIANCE RESULTS FOR COMPARING FLUIDIZED BED INCINERATION AT PLANT A AND STABILATION AT PLANT I

Analysis of Variance for Antimony
Comparison of All Four Treatments

Source	Degrees of freedom	Sum of Squares	Mean Squares	F Ratio	Critical F Value
Between Groups	3	3.3051	1.1017	87.7774	3.59
Within Groups	11	0.1381	0.0126		
Total	14	3.4432			

There is a significant difference between the four treatments; fluidized bed incineration is best.

Analysis of Variance for Antimony
Comparison of Cement, Kiln Dust, and Lime and Fly Ash Stabilization

Source	Degrees of freedom	Sum of Squares	Mean Squares	F Ratio	Critical F Value
Between Groups	2	0.0467	0.0233	26.4969	5.14
Within Groups	6	0.0053	0.0009		
Total	8	0.0520			

There is a significant difference between cement, kiln dust, and lime and fly ash stabilization treatments.

Table G-2 (Continued)
ANALYSIS OF VARIANCE RESULTS FOR COMPARING FLUIDIZED BED INCINERATION AT PLANT A AND STABILATION AT PLANT I

Analysis of Variance for Antimony
Comparison Between Cement and Kiln Dust Stabilization

Source	Degrees of freedom	Sum of Squares	Mean Squares	F Ratio	Critical F Value
Between Groups	1	0.0317	0.0317	24.0156	7.71
Within Groups	4	0.0053	0.0013		
Total	5	0.0370			

There is a significant difference between the cement stabilization and kiln dust stabilization treatments; cement stabilization treatment is better than kiln dust stabilization treatment.

Analysis of Variance for Antimony
Comparison Between Cement and Lime and Fly Ash Stabilization

Cement stabilization and lime and fly ash stabilization cannot be compared by ANOVA because each data set has a standard deviation of zero. Based on judgement, there is no significant difference between the two treatments.

Analysis of Variance for Antimony
Comparison Between Kiln Dust and Lime and Fly Ash Stabilization

Source	Degrees of freedom	Sum of Squares	Mean Squares	F Ratio	Critical F Value
Between Groups	1	0.0380	0.0380	28.7841	7.71
Within Groups	4	0.0053	0.0013		
Total	5	0.0433			

There is a significant difference between the kiln dust stabilization and lime and fly ash stabilization treatments; lime and fly ash stabilization treatment is better than kiln dust stabilization treatment.

Table G-2 (Continued)
ANALYSIS OF VARIANCE RESULTS FOR COMPARING FLUIDIZED BED INCINERATION AT PLANT A AND STABILATION AT PLANT I

Analysis of Variance for Arsenic
Comparison of All Four Treatments

Source	Degrees of freedom	Sum of Squares	Mean Squares	F Ratio	Critical F Value
Between Groups	3	6.1370	2.0457	25.9718	3.59
Within Groups	11	0.8664	0.0788		
Total	14	7.0034			

There is a significant difference between the four treatments; fluidized bed incineration is worst.

Analysis of Variance for Arsenic
Comparison Between Cement and Kiln Dust Stabilization

Cement stabilization and kiln dust stabilization cannot be compared by ANOVA because each data set has a standard deviation of zero. Based on judgement, there is no significant difference between the two treatments.

Analysis of Variance for Arsenic
Comparison Between Cement and Lime and Fly Ash Stabilization

Source	Degrees of freedom	Sum of Squares	Mean Squares	F Ratio	Critical F Value
Between Groups	1	0.0000	0.0000	1.0000	7.71
Within Groups	4	0.0000	0.0000		
Total	5	0.0000			

There is not a significant difference between the cement stabilization and lime and fly ash stabilization treatments.

Table G-2 (Continued)
ANALYSIS OF VARIANCE RESULTS FOR COMPARING FLUIDIZED BED INCINERATION AT PLANT A AND STABILATION AT PLANT I

Analysis of Variance for Arsenic
Comparison Between Kiln Dust and Lime and Fly Ash Stabilization

Source	Degrees of freedom	Sum of Squares	Mean Squares	F Ratio	Critical F Value
Between Groups	1	0.0552	0.0552	4.0000	7.71
Within Groups	4	0.0552	0.0138		
Total	5	0.1103			

There is not a significant difference between the kiln dust stabilization and lime and fly ash stabilization treatments.

Analysis of Variance for Barium
Comparison of All Four Treatments

Source	Degrees of freedom	Sum of Squares	Mean Squares	F Ratio	Critical F Value
Between Groups	3	2.0377	0.6792	58.3837	3.59
Within Groups	11	0.1280	0.0116		
Total	14	2.1656			

There is a significant difference between the four treatments; lime and fly ash stabilization is worst.

Table G-2 (Continued)
ANALYSIS OF VARIANCE RESULTS FOR COMPARING FLUIDIZED BED INCINERATION AT PLANT A AND STABILATION AT PLANT I

Analysis of Variance for Barium
Comparison of Fluidized Bed Incineration, Cement Stabilization, and Kiln Dust Stabilization

Source	Degrees of freedom	Sum of Squares	Mean Squares	F Ratio	Critical F Value
Between Groups	2	0.1972	0.0986	7.4507	4.26
Within Groups	9	0.1191	0.0132		
Total	11	0.3163			

There is a significant difference between fluidized bed incineration, cement stabilization, and kiln dust stabilization treatments.

Analysis of Variance for Barium
Comparison Between Fluidized Bed Incineration and Cement Stabilization

Source	Degrees of freedom	Sum of Squares	Mean Squares	F Ratio	Critical F Value
Between Groups	1	0.0114	0.0114	13.3106	4.74
Within Groups	7	0.0060	0.0009		
Total	8	0.0174			

There is a significant difference between the fluidized bed incineration and cement stabilization treatments; fluidized bed incineration treatment is better than cement stabilization treatment.

Table G-2 (Continued)
ANALYSIS OF VARIANCE RESULTS FOR COMPARING FLUIDIZED BED INCINERATION AT PLANT A AND STABILATION AT PLANT I

Analysis of Variance for Barium
Comparison Between Fluidized Bed Incineration and Kiln Dust Stabilization

Source	Degrees of freedom	Sum of Squares	Mean Squares	F Ratio	Critical F Value
Between Groups	1	0.0043	0.0043	2.9569	4.10
Within Groups	10	0.0145	0.0015		
Total	11	0.0188			

There is not a significant difference between the fluidized bed incineration and kiln dust stabilization treatments.

Analysis of Variance for Barium
Comparison Between Cement and Kiln Dust Stabilization

Source	Degrees of freedom	Sum of Squares	Mean Squares	F Ratio	Critical F Value
Between Groups	1	0.1251	0.1251	1517.6621	7.71
Within Groups	4	0.0003	0.0001		
Total	5	0.1255			

There is a significant difference between the cement stabilization and kiln dust stabilization treatments; kiln dust stabilization treatment is better than cement stabilization treatment.

Table G-2 (Continued)
ANALYSIS OF VARIANCE RESULTS FOR COMPARING FLUIDIZED BED INCINERATION AT PLANT A AND STABILATION AT PLANT I

Analysis of Variance for Chromium (total)
Comparison of All Four Treatments

Source	Degrees of freedom	Sum of Squares	Mean Squares	F Ratio	Critical F Value
Between Groups	3	0.9069	0.3023	74.6522	3.59
Within Groups	11	0.0445	0.0040		
Total	14	0.9514			

There is a significant difference between the four treatments; lime and fly ash stabilization is best.

Analysis of Variance for Chromium (total)
Comparison of Fluidized Bed Incineration, Cement Stabilization, and Kiln Dust Stabilization

Source	Degrees of freedom	Sum of Squares	Mean Squares	F Ratio	Critical F Value
Between Groups	2	0.0435	0.0218	5.1559	4.26
Within Groups	9	0.0380	0.0042		
Total	11	0.0813			

There is a significant difference between fluidized bed incineration, cement stabilization, and kiln dust stabilization treatments.

Table G-2 (Continued)
ANALYSIS OF VARIANCE RESULTS FOR COMPARING FLUIDIZED BED INCINERATION AT PLANT A AND STABILATION AT PLANT I

Analysis of Variance for Chromium (total)
Comparison Between Fluidized Bed Incineration and Cement Stabilization

Source	Degrees of freedom	Sum of Squares	Mean Squares	F Ratio	Critical F Value
Between Groups	1	0.0741	0.0741	1.7385	5.59
Within Groups	7	0.2984	0.0426		
Total	8	0.3725			

There is not a significant difference between the fluidized bed incineration and cement stabilization treatments.

Analysis of Variance for Chromium (total)
Comparison Between Fluidized Bed Incineration and Kiln Dust Stabilization

Source	Degrees of freedom	Sum of Squares	Mean Squares	F Ratio	Critical F Value
Between Groups	1	0.2596	0.2596	6.8641	4.96
Within Groups	10	0.3782	0.0378		
Total	11	0.6378			

There is a significant difference the between fluidized bed incineration and kiln dust stabilization treatments; kiln dust stabilization treatment is better than fluidized bed incineration treatment.

Table G-2 (Continued)
ANALYSIS OF VARIANCE RESULTS FOR COMPARING FLUIDIZED BED INCINERATION AT PLANT A AND STABILATION AT PLANT I

Analysis of Variance for Chromium (total)
Comparison Between Cement and Kiln Dust Stabilization

Source	Degrees of freedom	Sum of Squares	Mean Squares	F Ratio	Critical F Value
Between Groups	1	0.0095	0.0095	11.6573	7.71
Within Groups	4	0.0033	0.0008		
Total	5	0.0128			

There is a significant difference between the cement stabilization and kiln dust stabilization treatments; kiln dust stabilization treatment is better than cement stabilization treatment.

Analysis of Variance for Copper
Comparison of All Four Treatments

Source	Degrees of freedom	Sum of Squares	Mean Squares	F Ratio	Critical F Value
Between Groups	3	9.0755	3.0252	14.3052	3.59
Within Groups	11	2.3262	0.2115		
Total	14	11.4017			

There is a significant difference between the four treatments; fluidized bed incineration is worst.

Table G-2 [Continued]
ANALYSIS OF VARIANCE RESULTS FOR COMPARING FLUIDIZED BED INCINERATION AT PLANT A AND STABILATION AT PLANT I

Analysis of Variance for Copper
Comparison of Cement, Kiln Dust, and Lime and Fly Ash Stabilization

Source	Degrees of freedom	Sum of Squares	Mean Squares	F Ratio	Critical F Value
Between Groups	2	0.1413	0.0707	0.1823	5.14
Within Groups	6	2.3262	0.3877		
Total	8	2.4675			

There is not a significant difference between cement, kiln dust, and lime and fly ash stabilization treatments.

Analysis of Variance for Nickel
Comparison of All Four Treatments

Source	Degrees of freedom	Sum of Squares	Mean Squares	F Ratio	Critical F Value
Between Groups	3	0.0506	0.0169	1.2800	3.59
Within Groups	11	0.1454	0.0132		
Total	14	0.1962			

There is not a significant difference between the four treatments.

Analysis of Variance for Selenium
Comparison of All Four Treatments

Source	Degrees of freedom	Sum of Squares	Mean Squares	F Ratio	Critical F Value
Between Groups	3	5.5723	1.8574	6.8970	3.59
Within Groups	11	2.9624	0.2693		
Total	14	8.5347			

There is a significant difference between the four treatment; fluidized bed incineration is worst.

Table G-2 (Continued)
ANALYSIS OF VARIANCE RESULTS FOR COMPARING FLUIDIZED BED INCINERATION AT PLANT A AND STABILATION AT PLANT I

Analysis of Variance for Selenium
Comparison of Cement, Kiln Dust, and Lime and Fly Ash Stabilization

Source	Degrees of freedom	Sum of Squares	Mean Squares	F Ratio	Critical F Value
Between Groups	2	2.0015	1.0007	93.4250	5.14
Within Groups	6	0.0643	0.0107		
Total	8	2.0657			

There is a significant difference between cement, kiln dust, and lime and fly ash stabilization treatments.

Analysis of Variance for Selenium
Comparison Between Cement and Kiln Dust Stabilization

Source	Degrees of freedom	Sum of Squares	Mean Squares	F Ratio	Critical F Value
Between Groups	1	0.7102	0.7102	165.3701	7.71
Within Groups	4	0.0172	0.0043		
Total	5	0.7274			

There is a significant difference between the cement stabilization and kiln dust stabilization treatments; cement stabilization treatment is better than kiln dust stabilization treatment.

Table G-2 (Continued)
ANALYSIS OF VARIANCE RESULTS FOR COMPARING FLUIDIZED BED INCINERATION AT PLANT A AND STABILATION AT PLANT I

Analysis of Variance for Selenium
Comparison Between Cement and Lime and Fly Ash Stabilization

Source	Degrees of freedom	Sum of Squares	Mean Squares	F Ratio	Critical F Value
Between Groups	1	0.0002	0.0002	28.2847	7.71
Within Groups	4	0.0000	0.0000		
Total	5	0.0002			

There is a significant difference between the cement stabilization and lime and fly ash stabilization treatments; lime and fly ash stabilization treatment is better than cement stabilization treatment.

Analysis of Variance for Selenium
Comparison Between Kiln Dust and Lime and Fly Ash Stabilization

Source	Degrees of freedom	Sum of Squares	Mean Squares	F Ratio	Critical F Value
Between Groups	1	1.9753	1.9753	148.8405	7.71
Within Groups	4	0.0531	0.0133		
Total	5	2.0284			

There is a significant difference between the kiln dust stabilization and lime and fly ash stabilization treatments; lime and fly ash stabilization treatment is better than kiln dust stabilization treatment.

Table G-2 (Continued)
ANALYSIS OF VARIANCE RESULTS FOR COMPARING FLUIDIZED BED INCINERATION AT PLANT A AND STABILATION AT PLANT I

Analysis of Variance for Vanadium
Comparison of All Four Treatments

Source	Degrees of freedom	Sum of Squares	Mean Squares	F Ratio	Critical F Value
Between Groups	3	22.2776	7.4259	720.1425	3.59
Within Groups	11	0.1134	0.0103		
Total	14	22.3910			

There is a significant difference between the four treatments; lime and fly ash stabilization is best.

Analysis of Variance for Vanadium
Comparison of Fluidized Bed Incineration, Cement Stabilization, and Kiln Dust Stabilization

Source	Degrees of freedom	Sum of Squares	Mean Squares	F Ratio	Critical F Value
Between Groups	2	9.9386	4.9693	28.5188	4.26
Within Groups	9	1.5682	0.1742		
Total	11	11.5068			

There is a significant difference between fluidized bed incineration, cement stabilization, and kiln dust stabilization treatments.

Table G-2 (Continued)
ANALYSIS OF VARIANCE RESULTS FOR COMPARING FLUIDIZED BED INCINERATION AT PLANT A AND STABILATION AT PLANT I

Analysis of Variance for Vanadium
Comparison Between Fluidized Bed Incineration and Cement Stabilization

Source	Degrees of freedom	Sum of Squares	Mean Squares	F Ratio	Critical F Value
Between Groups	1	0.2596	0.2596	6.8641	4.96
Within Groups	10	0.3792	0.0376		
Total	11	0.6378			

There is a significant difference between the fluidized bed incineration and cement stabilization treatments; cement stabilization treatment is better than fluidized bed incineration treatment.

Analysis of Variance for Vanadium
Comparison Between Fluidized Bed Incineration and Kiln Dust Stabilization

Source	Degrees of freedom	Sum of Squares	Mean Squares	F Ratio	Critical F Value
Between Groups	1	0.0741	0.0741	1.7385	5.59
Within Groups	7	0.2984	0.0426		
Total	8	0.3725			

There is not a significant difference between the fluidized bed incineration and kiln dust stabilization treatments.

Table G-2 (Continued)
ANALYSIS OF VARIANCE RESULTS FOR COMPARING FLUIDIZED BED INCINERATION AT PLANT A AND STABILATION AT PLANT I

Analysis of Variance for Vanadium
Comparison Between Cement and Kiln Dust Stabilization

Source	Degrees of freedom	Sum of Squares	Mean Squares	F Ratio	Critical F Value
Between Groups	1	0.0620	0.0620	12.4054	7.71
Within Groups	4	0.0200	0.0050		
Total	5	0.0820			

There is a significant difference between the cement stabilization and kiln dust stabilization treatments; cement stabilization treatment is better than kiln dust stabilization treatment.

Analysis of Variance for Zinc
Comparison of All Four Treatments

Source	Degrees of freedom	Sum of Squares	Mean Squares	F Ratio	Critical F Value
Between Groups	3	2.5471	0.8490	10.0711	3.59
Within Groups	11	0.9274	0.0843		
Total	14	3.4745			

There is a significant difference between the four treatments; fluidized bed incineration is worst.

Table G-2 (Continued)
ANALYSIS OF VARIANCE RESULTS FOR COMPARING FLUIDIZED BED INCINERATION AT PLANT A AND STABILATION AT PLANT I

Analysis of Variance for Zinc
Comparison of Cement, Kiln Dust, and Lime and Fly Ash Stabilization

Source	Degrees of freedom	Sum of Squares	Mean Squares	F Ratio	Critical F Value
Between Groups	2	0.0026	0.0013	2.4124	5.14
Within Groups	6	0.0032	0.0005		
Total	8	0.0057			

There is not a significant difference between cement, kiln dust, and lime and fly ash stabilization treatments.

Appendix H

DETECTION LIMITS FOR UNTREATED WASTES

		Page
Table 6-2:	Detection limits for the dewatered DAF float samples - K048.	H-2
Table 3-1:	Detection limits for the slop oil emulsion solids samples - K049.	H-9
Table 6-7:	Detection limits for the API separator sludge samples - K051.	H-15
Table 3-3:	Detection limits for the leaded tank bottoms samples - K052.	H-22

TABLE 6-2: DETECTION LIMITS FOR THE DEWATERED DAF FLOAT MIXTURE SAMPLES

BDAT CONSTITUENT		Detection Limit
VOLATILE CONSTITUENTS		(ppm)
1	Acetonitrile	70
2	Acrolein	700
3	Acrylonitrile	70
4	Benzene	14
5	Bromodichloromethane	14
6	Bromomethane	14
7	Carbon tetrachloride	14
8	Carbon disulfide	NB
9	Chlorobenzene	14
10	2-Chloro-1,3-butadiene	14
11	Chlorodibromomethane	14
12	Chloroethane	14
13	2-Chloroethyl vinyl ether	NB
14	Chloroform	14
15	Chloromethane	14
16	3-Chloropropene	14
17	1,2-Dibromo-3-chloropropane	14
18	1,2-Dibromoethane	14
19	Dibromomethane	14
20	Trans-1,4-dichloro-2-butene	70
21	Dichlorodifluoromethane	14
22	1,1-Dichloroethane	14
23	1,2-Dichloroethane	14
24	1,1-Dichloroethylene	14
25	Trans-1,2-dichloroethene	14
26	1,2-Dichloropropane	35
27	Trans-1,3-dichloropropene	35
28	cis-1,3-Dichloropropene	35
29	1,4-Dioxane	NA
30	Ethyl cyanide	700
31	Ethyl methacrylate	14
32	Iodomethane	14

TABLE 6-2: DETECTION LIMITS FOR THE DEWATERED DAF FLOAT MIXTURE SAMPLES (Continued)

BDAT CONSTITUENT		Detection Limit
VOLATILE CONSTITUENTS (Continued)		(ppm)
33	Isobutyl alcohol	14
34	Methyl ethyl ketone	70
35	Methyl methacrylate	14
36	Methyl methanesulfonate	100
37	Methylacrylonitrile	70
38	Methylene chloride	70
39	Pyridine	200
40	1,1,1,2-Tetrachloroethane	14
41	1,1,2,2-Tetrachloroethane	14
42	Tetrachloroethene	14
43	Toluene	14
44	Tribromomethane	14
45	1,1,1-Trichloroethane	14
46	1,1,2-Trichloroethane	14
47	Trichloroethene	14
48	Trichloromonofluoromethane	14
49	1,2,3-Trichloropropane	35
50	Vinyl chloride	14
**	Acetone	70
**	Allyl alcohol	NA
**	Ethyl benzene	14
**	Ethylene oxide	NA
**	2-Hexanone	70
**	Malononitrile	NA
**	4-Methyl-2-pentanone	70
**	2-Propyn-1-ol	NA
**	Styrene	14
**	Trichloromethanethiol	NA
**	Vinyl acetate	14
**	Xylene (total)	14

TABLE 6-2: DETECTION LIMITS FOR THE DEWATERED DAF FLOAT MIXTURE SAMPLES (Continued)

BDAT CONSTITUENT		Detection Limit
SEMIVOLATILE CONSTITUENTS		(ppm)
51	Acenapthalene	20
52	Acenapthene	20
53	Acetophenone	20
54	2-Acetylaminofluorene	NA
55	4-Aminobiphenyl	20
56	Aniline	50
57	Anthracene	20
58	Aramite	NA
59	Benz(a)anthracene	20
60	Benzenethiol	NA
61	Benzidine	20
62	Benzo(a)pyrene	20
63	Benzo(b)fluoranthene	NA
64	Benzo(g,h,i)perylene	50
65	Benzo(k)fluoranthene	20
66	p-Benzoquinone	NA
67	Bis(2-chloroethoxy)ethane	20
68	Bis(2-chloroethyl)ether	20
69	Bis(2-chloroisopropyl)ether	20
70	Bis(2-ethylhexyl)phthalate	20
71	4-Bromophenyl phenyl ether	100
72	Butyl benzyl phthalate	20
73	2-sec-Butyl-4,6-dinitrophenol	NA
74	p-Chloroaniline	50
75	Chlorobenzilate	NB
76	p-Chloro-m-cresol	50
77	2-Chloronaphthalene	20
78	2-Chlorophenol	20
79	3-Chloropropionitrile	NA
80	Chrysene	20
81	ortho-Cresol	20
82	para-Cresol	20

TABLE 6-2: DETECTION LIMITS FOR THE DEWATERED DAF FLOAT MIXTURE SAMPLES (Continued)

BOAT CONSTITUENT		Detection Limit
SEMIVOLATILE CONSTITUENTS (Continued)		(ppm)
83	Dibenz(a,h)anthracene	20
84	Dibenzo(a,e)pyrene	NA
85	Dibenzo(a,i)pyrene	NA
86	m-Dichlorobenzene	20
87	o-Dichlorobenzene	20
88	p-Dichlorobenzene	20
89	3,3'-Dichlorobenzidine	100
90	2,4-Dichlorophenol	50
91	2,6-Dichlorophenol	50
92	Diethyl phthalate	20
93	3,3'-Dimethoxybenzidine	100
94	p-Dimethylaminoazobenzene	50
95	3,3'-Dimethylbenzidine	NA
96	2,4-Dimethylphenol	50
97	Dimethyl phthalate	20
98	Di-n-butyl phthalate	20
99	1,4-Dinitrobenzene	100
100	4,6-Dinitro-o-cresol	500
101	2,4-Dinitrophenol	500
102	2,4-Dinitrotoluene	500
103	2,6-Dinitrotoluene	100
104	Di-n-octyl phthalate	20
105	Di-n-propylnitrosamine	50
106	Diphenylamine	20
107	1,2-Diphenylhydrazine	20
108	Fluoranthene	20
109	Fluorene	20
110	Hexachlorobenzene	100
111	Hexachlorobutadiene	100
112	Hexachlorocyclopentadiene	100
113	Hexachloroethane	100
114	Hexachlorophene	NA
115	Hexachloropropene	100

TABLE 6-2: DETECTION LIMITS FOR THE DEWATERED DAF FLOAT MIXTURE SAMPLES (Continued)

BDAT CONSTITUENT		Detection Limit
SEMIVOLATILE CONSTITUENTS (Continued)		(ppm)
116	Indeno(1,2,3-cd)pyrene	50
117	Isosafrole	NA
118	Methapyrilene	NB
119	3-Methylcholanthrene	NA
120	4,4'-Methylenebis(2-chloroaniline)	NA
121	Naphthalene	20
122	1,4-Naphthoquinone	20
123	1-Naphthylamine	20
124	2-Naphthylamine	20
125	p-Nitroaniline	100
126	Nitrobenzene	50
127	4-Nitrophenol	100
128	N-Nitrosodi-n-butylamine	50
129	N-Nitrosodiethylamine	100
130	N-Nitrosodimethylamine	200
131	N-Nitrosomethylethylamine	NA
132	N-Nitrosomorpholine	100
133	N-Nitrosopiperidine	100
134	N-Nitrosopyrrolidine	100
135	5-Nitro-o-toluidine	NA
136	Pentachlorobenzene	100
137	Pentachloroethane	100
138	Pentachloronitrobenzene	100
139	Pentachlorophenol	500
140	Phenacetin	20
141	Phenanthrene	20
142	Phenol	20
143	2-Picoline	200
144	Pronamide	100
145	Pyrene	20
147	Safrole	NB
148	1,2,4,5-Tetrachlorobenzene	50

TABLE 6-2: DETECTION LIMITS FOR THE DEWATERED DAF FLOAT MIXTURE SAMPLES (Continued)

BDAT CONSTITUENT		Detection Limit
SEMIVOLATILE CONSTITUENTS (Continued)		(ppm)
148	2,3,4,6-Tetrachlorophenol	100
150	1,2,4-Trichlorobenzene	50
151	2,4,5-Trichlorophenol	100
152	2,4,6-Trichlorophenol	100
**	Benzoic acid	500
**	Benzyl alcohol	50
**	4-Chlorophenyl phenyl ether	50
**	Dibenzofuran	20
**	Dibenzo(a,h)pyrene	NA
**	7,12-Dimethylbenz(a)anthracene	50
**	alpha,alpha-Dimethylphenethylamine	100
**	Isophorone	20
**	2-Methylnaphthalene	20
**	2-Nitroaniline	100
**	3-Nitroaniline	100
**	2-Nitrophenol	100
**	N-Nitrosodiphenylamine	20
METALS		(ppm)
154	Antimony	6
155	Arsenic	0.3
156	Barium	0.9
157	Beryllium	0.1
158	Cadmium	0.3
159	Chromium, hexavalent	0.05
159	Chromium, total	0.9
160	Copper	1
161	Lead	5
162	Mercury	0.02
163	Nickel	2

TABLE 6-2: DETECTION LIMITS FOR THE DEWATERED DAF FLOAT MIXTURE SAMPLES (Continued)

BDAT CONSTITUENT		Detection Limit
METALS (Continued)		(ppm)
164	Selenium	0.3
165	Silver	0.9
166	Thallium	0.2
167	Vanadium	2
168	Zinc	0.6
**	Aluminum	20
**	Calcium	6
**	Cobalt	1
**	Iron	3
**	Magnesium	20
**	Manganese	0.3
**	Potassium	29
**	Sodium	8
**	Tin	50
169	TOTAL CYANIDE (ppm)	0.1
171	SULFIDE (ppm)	50

NB = The compound was searched using an NBS library database of 42,000 compounds.

NA = The standard is not available; the compound was searched using an NBS library database of 42,000 compounds.

** = This constituent is not on the list of constituents in the GENERIC QUALITY ASSURANCE PROJECT PLAN FOR LAND DISPOSAL RESTRICTIONS PROGRAM ("BDAT"), EPA/530-SW-87-011, March 1987. It is a ground-water monitoring constituent as listed in Appendix IX, Page 26639, of the FEDERAL REGISTER, Vol. 51, No. 142.

TABLE 3-1: DETECTION LIMITS FOR THE SLOP OIL EMULSION SOLIDS SAMPLES - K049

BDAT CONSTITUENT		Detection Limit
VOLATILES		(ppm)
1	Acetonitrile	1000
2	Acrolein	1000
3	Acrylonitrile	1000
4	Benzene	50
5	Bromodichloromethane	50
6	Bromomethane	100
7	Carbon tetrachloride	50
8	Carbon disulfide	50
9	Chlorobenzene	50
10	2-Chloro-1,3-butadiene	1000
11	Chlorodibromomethane	50
12	Chloroethane	100
13	2-Chloroethyl vinyl ether	100
14	Chloroform	50
15	Chloromethane	100
16	3-Chloropropene	1000
17	1,2-Dibromo-3-chloropropane	1000
18	1,2-Dibromoethane	50
19	Dibromomethane	50
20	Trans-1,4-dichloro-2-butene	50
21	Dichlorodifluoromethane	1000
22	1,1-Dichloroethane	100
23	1,2-Dichloroethane	50
24	1,1-Dichloroethylene	50
25	Trans-1,2-dichloroethene	50
26	1,2-Dichloropropane	50
27	Trans-1,3-dichloropropene	50
28	cis-1,3-Dichloropropene	50
29	1,4-Dioxane	2000
30	Ethyl cyanide	1000
31	Ethyl methacrylate	1000
32	Iodomethane	500
33	Isobutyl alcohol	2000
34	Methyl ethyl ketone	100
35	Methyl methacrylate	1000
36	Methyl methanesulfonate	ND
37	Methylacrylonitrile	1000
38	Methylene chloride	50
39	Pyridine	4000
40	1,1,1,2-Tetrachloroethane	50

TABLE 3-1: DETECTION LIMITS FOR THE SLOP OIL EMULSION SOLIDS SAMPLES - K049 (Continued)

BDAT CONSTITUENT		Detection Limit
VOLATILES (Continued)		(ppm)
41	1,1,2,2-Tetrachloroethane	50
42	Tetrachloroethene	50
43	Toluene	50
44	Tribromomethane	50
45	1,1,1-Trichloroethane	50
46	1,1,2-Trichloroethane	50
47	Trichloroethene	50
48	Trichloromonofluoromethane	50
49	1,2,3-Trichloropropane	50
50	Vinyl chloride	100
**	Acetone	100
**	Ethyl benzene	50
**	2-Hexanone	100
**	4-Methyl-2-pentanone	100
**	Styrene	50
**	Vinyl acetate	100
++	Xylene(total)	50
SEMIVOLATILES		(ppm)
51	Acenaphthalene	40
52	Acenaphthene	40
53	Acetophenone	40
54	2-Acetylaminofluorene	80
55	4-Aminobiphenyl	40
56	Aniline	40
57	Anthracene	40
58	Aramite	NA
59	Benz(a)anthracene	40
60	Benzenethiol	ND
61	Benzidine	200
62	Benzo(a)pyrene	40
63	Benzo(b)fluoranthene	40
64	Benzo(g,h,i)perylene	40
65	Benzo(k)fluoranthene	40
66	p-Benzoquinone	ND
67	Bis(2-chloromethoxy)ethane	40
68	Bis(2-chloroethyl)ether	40

TABLE 3-1: DETECTION LIMITS FOR THE SLOP OIL EMULSION SOLIDS SAMPLES - K049 (Continued)

BDAT CONSTITUENT		Detection Limit
SEMIVOLATILES (Continued)		(ppm)
69	Bis(2-chloroisopropyl)ether	40
70	Bis(2-ethylhexyl)phthalate	40
71	4-Bromophenyl phenyl ether	40
72	Butyl benzyl phthalate	40
73	2-sec-Butyl-4,6-dinitrophenol	200
74	p-Chloroaniline	40
75	Chlorobenzilate	NA
76	p-Chloro-m-cresol	40
77	2-Chloronaphthalene	40
78	2-Chlorophenol	40
79	3-Chloropropionitrile	NA
80	Chrysene	40
81	ortho-Cresol	40
82	para-Cresol	40
83	Dibenz(a,h)anthracene	40
84	Dibenzo(a,e)pyrene	NS
85	Dibenzo(a,i)pyrene	NA
86	m-Dichlorobenzene	40
87	o-Dichlorobenzene	40
88	p-Dichlorobenzene	40
89	3,3'-Dichlorobenzidine	80
90	2,4-Dichlorophenol	40
91	2,6-Dichlorophenol	ND
92	Diethyl phthalate	40
93	3,3'-Dimethoxybenzidine	40
94	p-Dimethylaminoazobenzene	80
95	3,3'-Dimethylbenzidine	ND
96	2,4-Dimethylphenol	40
97	Dimethyl phthalate	40
98	Di-n-butyl phthalate	40
99	1,4-Dinitrobenzene	200
100	4,6-Dinitro-o-cresol	200
101	2,4-Dinitrophenol	200
102	2,4-Dinitrotoluene	40
103	2,6-Dinitrotoluene	40
104	Di-n-octyl phthalate	40
105	Di-n-propylnitrosamine	40
106	Diphenylamine	80
107	1,2-Diphenylhydrazine	200

TABLE 3-1: DETECTION LIMITS FOR THE SLOP OIL EMULSION SOLIDS SAMPLES - K049 (Continued)

BDAT CONSTITUENT		Detection Limit
SEMIVOLATILES (Continued)		(ppm)
108	Fluoranthene	40
109	Fluorene	40
110	Hexachlorobenzene	40
111	Hexachlorobutadiene	40
112	Hexachlorocyclopentadiene	40
113	Hexachloroethane	40
114	Hexachlorophene	NA
115	Hexachloropropene	ND
116	Indeno(1,2,3-cd)pyrene	40
117	Isosafrole	80
118	Methapyrilene	NS
119	3-Methylcholanthrene	80
120	4,4'-Methylenebis(2-chloroaniline)	80
121	Naphthalene	40
122	1,4-Naphthoquinone	NA
123	1-Naphthylamine	200
124	2-Naphthylamine	200
125	p-Nitroaniline	200
126	Nitrobenzene	40
127	4-Nitrophenol	200
128	N-Nitrosodi-n-butylamine	ND
129	N-Nitrosodiethylamine	ND
130	N-Nitrosodimethylamine	40
131	N-Nitrosomethylethylamine	40
132	N-Nitrosomorpholine	80
133	N-Nitrosopiperidine	40
134	N-Nitrosopyrrolidine	200
135	5-Nitro-o-toluidine	80
136	Pentachlorobenzene	ND
137	Pentachloroethane	NA
138	Pentachloronitrobenzene	400
139	Pentachlorophenol	200
140	Phenacetin	80
141	Phenanthrene	40
142	Phenol	40
143	2-Picoline	40
144	Pronamide	ND
145	Pyrene	40
146	Resorcinol	NA

TABLE 3-1: DETECTION LIMITS FOR THE SLOP OIL EMULSION SOLIDS SAMPLES - K049 (Continued)

BDAT CONSTITUENT		Detection Limit
SEMIVOLATILES (Continued)		(ppm)
147	Safrole	200
148	1,2,4,5-Tetrachlorobenzene	80
149	2,3,4,6-Tetrachlorophenol	ND
150	1,2,4-Trichlorobenzene	50
151	2,4,5-Trichlorophenol	100
152	2,4,6-Trichlorophenol	40
153	Tris(2,3-dibromopropyl) phosphate	ND
**	Benzoic acid	200
**	Benzyl alcohol	40
**	4-Chlorophenyl phenyl ether	40
**	Dibenzofuran	40
**	Dibenzo(a,h)pyrene	NS
**	7,12-Dimethylbenz(a)anthracene	ND
**	alpha,alpha-Dimethylphenethylamine	NS
**	Isophorone	40
**	Malonitrile	NA
**	2-Methylnaphthalene	40
**	2-Nitroaniline	200
**	3-Nitroaniline	200
**	2-Nitrophenol	400
**	N-Nitrosodiphenylamine	40
METALS		(ppm)
154	Antimony	3.2
155	Arsenic	2.0
156	Barium	0.1
157	Beryllium	0.1
158	Cadmium	0.4
159	Chromium, total	0.7
161	Copper	0.6
162	Lead	5.1
163	Mercury	0.2
164	Nickel	1.1
165	Selenium	5.0
166	Silver	0.6
167	Thallium	1.0
168	Vanadium	0.6
169	Zinc	0.2

TABLE 3-1: DETECTION LIMITS FOR THE SLOP OIL EMULSION SOLIDS SAMPLES - K049 (Continued)

BDAT CONSTITUENT		Detection Limit
INORGANICS		(ppm)
170	Total Cyanide	0.5
171	Fluoride	1.0
172	Sulfide	0.5

NA = Analysis cannot be done by method 8270 at this time due to inadequate recoveries in laboratory QA/QC analyses.

ND = Not detected, estimated detection limit has not been determined.

NS = The standard is not available; the compound was searched using an NBS library database of 42,000 compounds.

++ = Total xylene is the total result for ortho-Xylene, meta-Xylene, and para-Xylene with CAS numbers 95-47-6, 108-38-3, and 106-42-3, respectively.

** = This constituent is not on the list of constituents in the GENERIC QUALITY ASSURANCE PROJECT PLAN FOR LAND DISPOSAL RESTRICTIONS PROGRAM ("BDAT"), EPA/530-SW-87-011, March 1987. It is a ground-water monitoring constituent as listed in Appendix IX, Page 26639, of the FEDERAL REGISTER, Vol. 51, No. 142.

TABLE 6-7: DETECTION LIMITS FOR THE API SEPARATOR SLUDGE SAMPLES

BDAT CONSTITUENT		Detection Limit
VOLATILE CONSTITUENTS		(ppm)
1	Acetonitrile	70
2	Acrolein	700
3	Acrylonitrile	70
4	Benzene	14
5	Bromodichloromethane	14
6	Bromomethane	14
7	Carbon tetrachloride	14
8	Carbon disulfide	NB
9	Chlorobenzene	14
10	2-Chloro-1,3-butadiene	14
11	Chlorodibromomethane	14
12	Chloroethane	14
13	2-Chloroethyl vinyl ether	NB
14	Chloroform	14
15	Chloromethane	14
16	3-Chloropropene	14
17	1,2-Dibromo-3-chloropropane	14
18	1,2-Dibromoethane	14
19	Dibromomethane	14
20	Trans-1,4-dichloro-2-butene	70
21	Dichlorodifluoromethane	14
22	1,1-Dichloroethane	14
23	1,2-Dichloroethane	14
24	1,1-Dichloroethylene	14
25	Trans-1,2-dichloroethene	14
26	1,2-Dichloropropane	35
27	Trans-1,3-dichloropropene	35
28	cis-1,3-Dichloropropene	35
29	1,4-Dioxane	NA
30	Ethyl cyanide	700
31	Ethyl methacrylate	14
32	Iodomethane	14

TABLE 6-7: DETECTION LIMITS FOR THE API SEPARATOR SLUDGE SAMPLES (Continued)

BDAT CONSTITUENT		Detection Limit
VOLATILE CONSTITUENTS (Continued)		(ppm)
33	Isobutyl alcohol	14
34	Methyl ethyl ketone	70
35	Methyl methacrylate	14
36	Methyl methanesulfonate	100
37	Methylacrylonitrile	70
38	Methylene chloride	70
39	Pyridine	200
40	1,1,1,2-Tetrachloroethane	14
41	1,1,2,2-Tetrachloroethane	14
42	Tetrachloroethene	14
43	Toluene	14
44	Tribromomethane	14
45	1,1,1-Trichloroethane	14
46	1,1,2-Trichloroethane	14
47	Trichloroethene	14
48	Trichloromonofluoromethane	14
49	1,2,3-Trichloropropane	35
50	Vinyl chloride	14
**	Acetone	70
**	Allyl alcohol	NA
**	Ethyl benzene	14
**	Ethylene oxide	NA
**	2-Hexanone	70
**	Malononitrile	NA
**	4-Methyl-2-pentanone	70
**	2-Propyn-1-ol	NA
**	Styrene	14
**	Trichloromethanethiol	NA
**	Vinyl acetate	14
**	Xylene (total)	14

TABLE 8-7: DETECTION LIMITS FOR THE API SEPARATOR SLUDGE SAMPLES (Continued)

BDAT CONSTITUENT		Detection Limit
SEMIVOLATILE CONSTITUENTS		(ppm)
51	Acenapthalene	20
52	Acenapthene	20
53	Acetophenone	20
54	2-Acetylaminofluorene	NA
55	4-Aminobiphenyl	20
56	Aniline	50
57	Anthracene	20
58	Aramite	NA
59	Benz(a)anthracene	20
60	Benzenethiol	NA
61	Benzidine	20
62	Benzo(a)pyrene	20
63	Benzo(b)fluoranthene	NA
64	Benzo(g,h,i)perylene	50
65	Benzo(k)fluoranthene	20
66	p-Benzoquinone	NA
67	Bis(2-chloroethoxy)ethane	20
68	Bis(2-chloroethyl)ether	20
69	Bis(2-chloroisopropyl)ether	20
70	Bis(2-ethylhexyl)phthalate	20
71	4-Bromophenyl phenyl ether	100
72	Butyl benzyl phthalate	20
73	2-sec-Butyl-4,6-dinitrophenol	NA
74	p-Chloroaniline	50
75	Chlorobenzilate	NB
76	p-Chloro-m-cresol	50
77	2-Chloronaphthalene	20
78	2-Chlorophenol	20
79	3-Chloropropionitrile	NA
80	Chrysene	20
81	ortho-Cresol	20
82	para-Cresol	20

TABLE 6-7: DETECTION LIMITS FOR THE API SEPARATOR SLUDGE SAMPLES (Continued)

BDAT CONSTITUENT		Detection Limit
SEMIVOLATILE CONSTITUENTS (Continued)		(ppm)
83	Dibenz(a,h)anthracene	20
84	Dibenzo(a,e)pyrene	NA
85	Dibenzo(a,i)pyrene	NA
86	m-Dichlorobenzene	20
87	o-Dichlorobenzene	20
88	p-Dichlorobenzene	20
89	3,3'-Dichlorobenzidine	100
90	2,4-Dichlorophenol	50
91	2,6-Dichlorophenol	50
92	Diethyl phthalate	20
93	3,3'-Dimethoxybenzidine	100
94	p-Dimethylaminoazobenzene	50
95	3,3'-Dimethylbenzidine	NA
96	2,4-Dimethylphenol	50
97	Dimethyl phthalate	20
98	Di-n-butyl phthalate	20
99	1,4-Dinitrobenzene	100
100	4,6-Dinitro-o-cresol	500
101	2,4-Dinitrophenol	500
102	2,4-Dinitrotoluene	500
103	2,6-Dinitrotoluene	100
104	Di-n-octyl phthalate	20
105	Di-n-propylnitrosamine	50
106	Diphenylamine	20
107	1,2-Diphenylhydrazine	20
108	Fluoranthene	20
109	Fluorene	20
110	Hexachlorobenzene	100
111	Hexachlorobutadiene	100
112	Hexachlorocyclopentadiene	100
113	Hexachloroethane	100
114	Hexachlorophene	NA
115	Hexachloropropene	100

TABLE 6-7: DETECTION LIMITS FOR THE API SEPARATOR SLUDGE SAMPLES (Continued)

BDAT CONSTITUENT		Detection Limit
SEMIVOLATILE CONSTITUENTS (Continued)		(ppm)
116	Indeno(1,2,3-cd)pyrene	50
117	Isosafrole	NA
118	Methapyrilene	NB
119	3-Methylcholanthrene	NA
120	4,4'-Methylenebis(2-chloroaniline)	NA
121	Naphthalene	20
122	1,4-Naphthoquinone	20
123	1-Naphthylamine	20
124	2-Naphthylamine	20
125	p-Nitroaniline	100
126	Nitrobenzene	50
127	4-Nitrophenol	100
128	N-Nitrosodi-n-butylamine	50
129	N-Nitrosodiethylamine	100
130	N-Nitrosodimethylamine	200
131	N-Nitrosomethylethylamine	NA
132	N-Nitrosomorpholine	100
133	N-Nitrosopiperidine	100
134	N-Nitrosopyrrolidine	100
135	5-Nitro-o-toluidine	NA
136	Pentachlorobenzene	100
137	Pentachloroethane	100
138	Pentachloronitrobenzene	100
139	Pentachlorophenol	500
140	Phenacetin	20
141	Phenanthrene	20
142	Phenol	20
143	2-Picoline	200
144	Pronamide	100
145	Pyrene	20
147	Safrole	NB
148	1,2,4,5-Tetrachlorobenzene	50

TABLE 6-7: DETECTION LIMITS FOR THE API SEPARATOR SLUDGE SAMPLES (Continued)

BDAT CONSTITUENT		Detection Limit
SEMIVOLATILE CONSTITUENTS (Continued)		(ppm)
149	2,3,4,6-Tetrachlorophenol	100
150	1,2,4-Trichlorobenzene	50
151	2,4,5-Trichlorophenol	100
152	2,4,6-Trichlorophenol	100
**	Benzoic acid	500
**	Benzyl alcohol	50
**	4-Chlorophenyl phenyl ether	50
**	Dibenzofuran	20
**	Dibenzo(a,h)pyrene	NA
**	7,12-Dimethylbenz(a)anthracene	50
**	alpha,alpha-Dimethylphenethylamine	100
**	Isophorone	20
**	2-Methylnaphthalene	20
**	2-Nitroaniline	100
**	3-Nitroaniline	100
**	2-Nitrophenol	100
**	N-Nitrosodiphenylamine	20
METALS		(ppm)
154	Antimony	6
155	Arsenic	0.3
156	Barium	0.9
157	Beryllium	0.1
158	Cadmium	0.3
159	Chromium, hexavalent	0.05
159	Chromium, total	0.9
160	Copper	1
161	Lead	5
162	Mercury	0.02
163	Nickel	2

TABLE 6-7: DETECTION LIMITS FOR THE API SEPARATOR SLUDGE SAMPLES (Continued)

BDAT CONSTITUENT		Detection Limit
METALS (Continued)		(ppm)
164	Selenium	0.4
165	Silver	0.9
166	Thallium	0.2
167	Vanadium	2
168	Zinc	0.6
**	Aluminum	20
**	Calcium	6
**	Cobalt	1
**	Iron	3
**	Magnesium	20
**	Manganese	0.3
**	Potassium	29
**	Sodium	8
**	Tin	50
169	TOTAL CYANIDE (PPM)	0.1
171	SULFIDE (ppm)	50

NB = The compound was searched using an NBS library database of 42,000 compounds.

NA = The standard is not available; the compound was searched using an NBS library database of 42,000 compounds.

** = This constituent is not on the list of constituents in the GENERIC QUALITY ASSURANCE PROJECT PLAN FOR LAND DISPOSAL RESTRICTIONS PROGRAM ("BDAT"), EPA/530-SW-87-011, March 1987. It is a ground-water monitoring constituent as listed in Appendix IX, Page 26639, of the FEDERAL REGISTER, Vol. 51, No. 142.

TABLE 3-3: DETECTION LIMITS FOR THE LEADED TANK BOTTOMS SAMPLES - K052

BDAT CONSTITUENT		Detection Limit
VOLATILE CONSTITUENTS		(ppm)
1	Acetonitrile	1000
2	Acrolein	1000
3	Acrylonitrile	1000
4	Benzene	50
5	Bromodichloromethane	50
6	Bromomethane	100
7	Carbon tetrachloride	50
8	Carbon disulfide	50
9	Chlorobenzene	50
10	2-Chloro-1,3-butadiene	1000
11	Chlorodibromomethane	50
12	Chloroethane	100
13	2-Chloroethyl vinyl ether	100
14	Chloroform	50
15	Chloromethane	100
16	3-Chloropropene	1000
17	1,2-Dibromo-3-chloropropane	1000
18	1,2-Dibromoethane	50
19	Dibromomethane	50
20	Trans-1,4-dichloro-2-butene	1000
21	Dichlorodifluoromethane	100
22	1,1-Dichloroethane	50
23	1,2-Dichloroethane	50
24	1,1-Dichloroethylene	50
25	Trans-1,2-dichloroethene	50
26	1,2-Dichloropropane	50
27	Trans-1,3-dichloropropene	50
28	cis-1,3-Dichloropropene	50
29	1,4-Dioxane	2000
30	Ethyl cyanide	1000
31	Ethyl methacrylate	1000
32	Iodomethane	50
33	Isobutyl alcohol	2000
34	Methyl ethyl ketone	100
35	Methyl methacrylate	1000
36	Methyl methanesulfonate	ND
37	Methylacrylonitrile	1000
38	Methylene chloride	50
39	Pyridine	4000
40	1,1,1,2-Tetrachloroethane	50

TABLE 3-3: DETECTION LIMITS FOR THE LEADED TANK BOTTOMS SAMPLES - K052 (Continued)

BDAT CONSTITUENT		Detection Limit
VOLATILES (Continued)		
41	1,1,2,2-Tetrachloroethane	50
42	Tetrachloroethene	50
43	Toluene	50
44	Tribromomethane	50
45	1,1,1-Trichloroethane	50
46	1,1,2-Trichloroethane	50
47	Trichloroethene	50
48	Trichloromonofluoromethane	50
49	1,2,3-Trichloropropene	50
50	Vinyl chloride	100
**	Acetone	100
**	Ethyl benzene	50
**	2-Hexanone	100
**	4-Methyl-2-pentanone	100
**	Styrene	50
**	Vinyl acetate	100
++	Xylenes (total)	50
SEMIVOLATILES		(ppm)
51	Acenaphthalene	1.8
52	Acenaphthene	1.8
53	Acetophenone	3.6
54	2-Acetylaminofluorene	3.6
55	4-Aminobiphenyl	3.6
56	Aniline	1.8
57	Anthracene	1.8
58	Aramite	NA
59	Benz(a)anthracene	1.8
60	Benzenethiol	ND
61	Benzidine	9.0
62	Benzo(a)pyrene	1.8
63	Benzo(b)fluoranthene	1.8
64	Benzo(g,h,i)perylene	1.8
65	Benzo(k)fluoranthene	1.8
66	p-Benzoquinone	ND
67	Bis(2-chloromethoxy)ethane	1.8
68	Bis(2-chloroethyl)ether	1.8

TABLE 3-3: DETECTION LIMITS FOR THE LEADED TANK BOTTOMS SAMPLES - K052 (Continued)

BDAT CONSTITUENT		Detection Limit
SEMIVOLATILES (Continued)		(ppm)
69	Bis(2-chloroisopropyl)ether	1.8
70	Bis(2-ethylhexyl)phthalate	1.8
71	4-Bromophenyl phenyl ether	1.8
72	Butyl benzyl phthalate	1.8
73	2-sec-Butyl-4,6-dinitrophenol	9.0
74	p-Chloroaniline	1.8
75	Chlorobenzilate	NA
76	p-Chloro-m-cresol	1.8
77	2-Chloronaphthalene	1.8
78	2-Chlorophenol	1.8
79	3-Chloropropionitrile	NA
80	Chrysene	1.8
81	ortho-Cresol	1.8
82	para-Cresol	1.8
83	Dibenz(a,h)anthracene	1.8
84	Dibenzo(a,e)pyrene	NS
85	Dibenzo(a,i)pyrene	NA
86	m-Dichlorobenzene	1.8
87	o-Dichlorobenzene	1.8
88	p-Dichlorobenzene	1.8
89	3,3'-Dichlorobenzidine	1.8
90	2,4-Dichlorophenol	1.8
91	2,6-Dichlorophenol	ND
92	Diethyl phthalate	1.8
93	3,3'-Dimethoxybenzidine	1.8
94	p-Dimethylaminoazobenzene	3.6
95	3,3'-Dimethylbenzidine	ND
96	2,4-Dimethylphenol	1.8
97	Dimethyl phthalate	1.8
98	Di-n-butyl phthalate	1.8
99	1,4-Dinitrobenzene	9.0
100	4,6-Dinitro-o-cresol	9.0
101	2,4-Dinitrophenol	9.0
102	2,4-Dinitrotoluene	1.8
103	2,6-Dinitrotoluene	1.8
104	Di-n-octyl phthalate	1.8
105	Di-n-propylnitrosamine	1.8
106	Diphenylamine	3.6
107	1,2-Diphenylhydrazine	9.0

TABLE 3-3: DETECTION LIMITS FOR THE LEADED TANK BOTTOMS SAMPLES - K052 (Continued)

BDAT CONSTITUENT		Detection Limit
SEMIVOLATILES (Continued)		(ppm)
108	Fluoranthene	1.8
109	Fluorene	1.8
110	Hexachlorobenzene	1.8
111	Hexachlorobutadiene	1.8
112	Hexachlorocyclopentadiene	1.8
113	Hexachloroethane	1.8
114	Hexachlorophene	NA
115	Hexachloropropene	ND
116	Indeno(1,2,3-cd)pyrene	1.8
117	Isosafrole	3.6
118	Methapyrilene	NS
119	3-Methylcholanthrene	3.6
120	4,4'-Methylenebis(2-chloroaniline)	3.6
121	Naphthalene	1.8
122	1,4-Naphthoquinone	NA
123	1-Naphthylamine	9.0
124	2-Naphthylamine	9.0
125	p-Nitroaniline	9.0
126	Nitrobenzene	1.8
127	4-Nitrophenol	9.0
128	N-Nitrosodi-n-butylamine	ND
129	N-Nitrosodiethylamine	ND
130	N-Nitrosodimethylamine	1.8
131	N-Nitrosomethylethylamine	1.8
132	N-Nitrosomorpholine	3.6
133	N-Nitrosopiperidine	1.8
134	N-Nitrosopyrrolidine	9.0
135	5-Nitro-o-toluidine	3.6
136	Pentachlorobenzene	ND
137	Pentachloroethane	NA
138	Pentachloronitrobenzene	18.0
139	Pentachlorophenol	9.0
140	Phenacetin	3.6
141	Phenanthrene	1.8
142	Phenol	1.8
143	2-Picoline	1.8
144	Pronamide	ND
145	Pyrene	1.8
146	Resorcinol	NA
147	Safrole	9.0

TABLE 3-3: DETECTION LIMITS FOR THE LEADED TANK BOTTOMS SAMPLES - K052 (Continued)

BDAT CONSTITUENT		Detection Limit
SEMIVOLATILES (Continued)		(ppm)
148	1,2,4,5-Tetrachlorobenzene	3.6
149	2,3,4,6-Tetrachlorophenol	ND
150	1,2,4-Trichlorobenzene	1.8
151	2,4,5-Trichlorophenol	9.0
152	2,4,6-Trichlorophenol	1.8
153	Tris(2,3-dibromopropyl) phosphate	ND
**	Benzoic acid	9.0
**	Benzyl alcohol	1.8
**	4-Chlorophenyl phenyl ether	1.8
**	Dibenzofuran	1.8
**	Dibenzo(a,h)pyrene	NS
**	7,12-Dimethylbenz(a)anthracene	ND
**	alpha,alpha-Dimethylphenethylamine	NS
**	Isophorone	1.8
**	Malonitrile	NA
**	2-Methylnaphthalene	1.8
**	2-Nitroaniline	9.0
**	3-Nitroaniline	9.0
**	2-Nitrophenol	1.8
**	N-Nitrosodiphenylamine	1.8
METALS		(ppm)
154	Antimony	3.2
155	Arsenic	2.0
156	Barium	0.1
157	Beryllium	0.1
158	Cadmium	0.4
159	Chromium, total	0.7
161	Copper	0.6
162	Lead	5.1
163	Mercury	0.2
164	Nickel	1.1
165	Selenium	100
166	Silver	6.0
167	Thallium	1.0
168	Vanadium	6.0
169	Zinc	0.2

TABLE 3-3: DETECTION LIMITS FOR THE LEADED TANK BOTTOMS SAMPLES - K052 (Continued)

BDAT CONSTITUENT		Detection Limit
INORGANICS		(ppm)
170	Total Cyanide	0.5
171	Fluoride	1.0
172	Sulfide	0.5

NA = Analysis cannot be done by method 8270 at this time due to inadequate recoveries in laboratory QA/QC analyses.

ND = Not detected, estimated detection limit has not been determined.

NS = The standard is not available; the compound was searched using an NBS library database of 42,000 compounds.

++ = Total xylene is the total result for ortho-Xylene, meta-Xylene, and para-Xylene, with CAS numbers 95-47-6, 108-38-3, and 106-42-3, respectively.

** = This constituent is not on the list of constituents in the GENERIC QUALITY ASSURANCE PROJECT PLAN FOR LAND DISPOSAL RESTRICTIONS PROGRAM ("BDAT"), EPA/530-SW-87-011, March 1987. It is a ground-water monitoring constituent as listed in Appendix IX, Page 26639, of the FEDERAL REGISTER, Vol. 51, No. 142.

Appendix I

WASTE CHARACTERISTICS AFFECTING PERFORMANCE

	Page
List of boiling points for constituents of interest.	I-2
List of bond dissociation energies for constituents of interest.	I-3
Calculation of thermal conductivity for waste treated at plant A.	I-4

Constituent Boiling Points

Constituent	Boiling Point (°C)	Reference Number
4. Benzene	80-80.1	1
8. Carbon disulfide	46-46.5	1
21. Dichlorodifluoromethane	(-30)-(-29.8)	1
226. Ethyl benzene	136.25	1
43. Toluene	110.6-111	1
215. 1,2-Xylene	144	1
216. 1,3-Xylene	139.3	1
217. 1,4-Xylene	137-138	1
52. Acenaphthene	279	1
57. Anthracene	242	1
59. Benz(a)anthracene	435	3
62. Benzo(a)pyrene	310-312	1
70. Bis(2-ethylhexyl)phthalate	385	2
80. Chrysene	448	1
81. o-Cresol	191-192	1
82. p-Cresol	201.8-202	1
96. 2,4-Dimethylphenol	211.5-212	1
98. Di-n-butyl phthalate	340	1
109. Fluorene	295	1
121. Naphthalene	217.9-218	1
141. Phenanthrene	340	1
142. Phenol	182	1
145. Pyrene	404	1

1 = Merck Index (Reference 31).

2 = Handbook of Environmental Data on Organic Chemicals (Reference 32).

3 = Handbook of Chemistry and Physics (Reference 33).

Bond Dissociation Energies

Constituent	Estimated Bond Dissociation Energy
4. Benzene	1320
8. Carbon disulfide	279
21. Dichlorodifluoromethane	380
226. Ethyl benzene	1920
43. Toluene	1235
215-217. Xylene	1220
52. Acenaphthene	2570
57. Anthracene	2870
59. Benz(a)anthracene	3580
62. Benzo(a)pyrene	4030
68. Bis(2-chloroethyl)ether	1290
70. Bis(2-ethylhexyl)phthalate	6610
80. Chrysene	3650
81. o-Cresol	1405
82. p-Cresol	1405
87. o-Dimethylbenzene	1325
96. 2,4-Dimethylphenol	1390
98. Di-n-butyl phthalate	4340
109. Fluorene	2700
121. Naphthalene	2095
141. Phenanthrene	2900
142. Phenol	1421
145. Pyrene	3240

Sources: Sanderson, R.T., Chemical Bonds and Bond Energy (Reference 35).
Lange's Handbook of Chemistry (Reference 34).
Handbook of Chemistry and Physics (Reference 33).

CALCULATION OF THERMAL CONDUCTIVITY FOR

WASTE TREATED AT PLANT A

Calculation of weight fractions of K048 and K051 in the total feed stream:

From tables 4-1 through 4-6 in the Amoco OER (Reference 6) the average K048 and K051 waste feed rates are 53 gpm and 22.3 gpm, respectively. Since these are the only feeds to the incinerator, the weight fractions of the wastes feed are calculated as follows:

K048:(100) 53/ (53 + 22.3) = 71% = X K048
K051:(100) 22/ (22.3 + 53) = 29% = X K051

Major constituent analysis:

From sections 2.1.2 and 2.2.2 in the Amoco OER (Reference 6) the major constituent composition of K048 and K051 is as follows:

Constituent	K048 (%)	K051 (%)
Water	15	30
Oil	14	15
Sand, Dirt and other soils	70	54

Major constituent composition of the total waste stream:

The composition of the total waste stream is calculated as follows:

% Water = (% water in K048)(X K048) + (% water in K051) (X K051)
= (15)(0.71) + (30)(.29)
= 20

% Oil = (% oil in K048)(X K048) + (% oil in K051)(X K051)
= (14)(0.71) + (15)(0.29)
= 14

% Sand & Dirt
= (% Sand & dirt in K048)(X K048) + (% Sand & dirt in K051)(X K051)
= (70)(0.71) + (54)(.29)
= 66

CALCULATION OF THERMAL CONDUCTIVITY FOR

WASTE TREATED AT PLANT A (Continued)

Thermal conductivity (k) of major constituents:

From Lange's Handbook of Chemistry (Reference 34) the thermal conductivities (k) for the major constituents are:

k water = 0.329 BTU/hr ft ^{o}F @ 54°F
k gasoline = 0.078 BTU/hr ft ^{o}F @ 86°F
k dry sand = 0.225 BTU/hr ft ^{o}F @ 68°F

In the absence of thermal conductivity values for oil and wet sand and dirt, we have used the thermal conductivity values for gasoline and dry sand for the purposes of this calculation.

Calculations of the overall waste thermal conductivity:

Using the major constituent compositions of the total waste stream and the thermal conductivities presented above, the calculations of the overall waste thermal conductivity is as follows:

k overall = (% water) (k water) + (% oil)(k gasoline) + (% sand & dirt)(k dry sand)
= (0.20)(0.329 BTU/hr ft ^{o}F) + (0.14)(0.078 BTU/hr ft ^{o}F) + (0.66)(0.225 BTU/hr ft ^{o}F)
= 0.23 BTU/hr ft ^{o}F