United States
Environmental Protection
Agency

Office of
Solid Waste
Washington, D.C 20460

EPA/530-SW-88-0009-f
April 1988

Solid Waste

EPA

Proposed Best Demonstrated Available Technology (BDAT) Background Document for K071

Volume 6

EPA/530-SW-88-009F

PROPOSED

BEST DEMONSTRATED AVAILABLE TECHNOLOGY (BDAT) BACKGROUND DOCUMENT FOR K071

Volume 6

U.S. Environmental Protection Agency
Office of Solid Waste
401 M Street, S.W.
Washington, D.C. 20460

James R. Berlow, Chief
Treatment Technology Section

John Keenan
Project Manager

April 1988

U.S. Environmental Protection Agency
Region 5, Library (PL-12J)
77 West Jackson Boulevard, 12th Floor
Chicago, IL 60604-3590

BDAT BACKGROUND DOCUMENT FOR K071

TABLE OF CONTENTS

VOLUME 6 — Page

Executive Summary .....

BDAT Treatment Standards for K071 .....

SECTION 1. Introduction 1

1.1 Legal Background 1
1.1.1 Authority Under HSWA 1
1.1.2 Schedule for Developing Restrictions 4
1.2 Summary of Promulgated BDAT Methodology 5
1.2.1 Waste Treatability Groups 7
1.2.2 Demonstrated and Available Treatment Technologies .. 7
(1) Proprietary or Patented Processes 10
(2) Substantial Treatment 10
1.2.3 Collection of Performance Data 11
(1) Identification of Facilities for Site Visits .. 12
(2) Engineering Site Visit 13
(3) Sampling and Analysis Plan 14
(4) Sampling Visit 16
(5) Onsite Engineering Report 17
1.2.4 Hazardous Constituents Considered and Selected for Regulation 17
(1) Development of BDAT List 17
(2) Constituent Selection Analysis 27
(3) Calculation of Standards 29
1.2.5 Compliance with Performance Standards 30
1.2.6 Identification of BDAT 32
(1) Screening of Treatment Data 32
(2) Comparison of Treatment Data 33
(3) Quality Assurance/Quality Control 34
1.2.7 BDAT Treatment Standards for "Derived-From" and "Mixed" Wastes 36
(1) Wastes from Treatment Trains Generating Multiple Residues 36
(2) Mixtures and Other Derived-From Residues 37
(3) Residues from Managing Listed Wastes or that Contain Listed Wastes 38
1.2.8 Transfer of Treatment Standards 40
1.3 Variance from the BDAT Treatment Standard 41

SECTION 2. Industries Affected and Waste Characterization 46

2.1 Industries Affected and Process Description 47
2.2 Waste Characterization 51

SECTION 3. Applicable/Demonstrated Treatment Technologies 55

3.1 Applicable Treatment Technologies 55
3.2 Demonstrated Treatment Technologies 56
3.2.1 Acid Leaching Treatment System 57
3.2.1.1 Acid Leaching 59
3.2.1.2 Sludge Filtration 65
3.2.2 Stabilization of Metals 69
3.2.3 Chemical Precipitation Treatment System 77
3.2.3.1 Chemical Precipitation 77
3.3 Performance Data for Nonwastewater 89
3.4 Performance Data for Wastewater 90

SECTION 4. Selection of Best Demonstrated Available Technology (BDAT) 103

4.1 Data Screening 104
4.2 Data Accuracy 105
4.3 Analysis of Variance 106
4.4 Determination of Availability of Best Technology 106

SECTION 5. Selection of Regulated Constituents 110

SECTION 6. Calculation of Treatment Standards 120

SECTION 7. Conclusions 124

APPENDIX A Analytical Data Submitted by Industry for Treatment of K071 129

APPENDIX B Analytical QA/QC 172

APPENDIX C Statistical Analysis 186
C.1 F Value Determination for ANOVA Test 187
C.2 Variability Factor 197

APPENDIX D Other Agency Characterization Data 198

REFERENCES 201

LIST OF TABLES

		Page No.
Table 1-1	BDAT Constituent List	19
Table 2-1	Number of Producers of Chlorine Using the Mercury Cell Process Listed by State	48
Table 2-2	Number of Producers of Chlorine Using the Mercury Cell Process Listed by EPA Region	49
Table 2-3	Major Constituent Analysis of Untreated Brine Purification Muds	52
Table 2-4	Major Constituent Analysis of Untreated Saturator Insolubles	53
Table 2-5	BDAT Constituent Composition of Untreated K071 Waste	54
Table 3-1	EPA-Collected Data for Treatment of K071 Waste	91
Table 3-2	EPA-Collected Data for Treatment of K071 Waste	92
Table 3-3	EPA-Collected Data for Treatment of K071 Waste	93
Table 3-4	EPA-Collected Data for Treatment of K071 Waste	94
Table 3-5	EPA-Collected Data for Treatment of K071 Waste	95
Table 3-6	EPA-Collected Data for Treatment of K071 Waste	96
Table 3-7	EPA-Collected Data for Treatment of K071 Waste	97
Table 3-8	EPA-Collected Data for Acid Leaching (Percolation)	98
Table 3-9	Waste Characteristics Affecting Performance for Acid Leaching	99
Table 3-10	Sulfide Precipitation - EPA-Collected Data	100
Table 3-11	Sulfide Precipitation - EPA-Collected Data	101
Table 3-12	Sulfide Precipitation - EPA-Collected Data	102

LIST OF TABLES (continued)

		Page No.
Table 4-1	Treatment Data Used for Regulation of K071 Nonwastewater	108
Table 4-2	Treatment Data Used for Regulation of K071 Wastewater	109
Table 5-1	BDAT List of Constituents	113
Table 6-1	Calculation of Treatment Standards for K071 Acid Leaching, EPA-Collected Data	123
Table 7-1	BDAT Treatment Standards for K071	125

LIST OF FIGURES

Figure 3-1 Schematic of K071 Waste Treatment Process 58

Figure 3-2 Continuous Extractor 62

Figure 3-3 Continuous Chemical Precipitation 80

Figure 3-4 Circular Clarifiers 83

Figure 3-5 Inclined Plate Settler 84

EXECUTIVE SUMMARY

Pursuant to the Hazardous and Solid Waste Amendments (HSWA) enacted on November 8, 1984, and in accordance with the procedures for establishing treatment standards under Section 3004(m) of the Resource Conservation and Recovery Act (RCRA), the following treatment standards have been proposed as Best Demonstrated Available Technology (BDAT) for the listed waste identified in 40 CFR Section 261.32 as K071 (brine purification muds from the mercury cell process in chlorine production, where separately prepurified brine is not used) as a prerequisite for disposal of the waste in units designated as land disposal units according to 40 CFR Part 268.

Standards are established for one metal (mercury). These standards are established based on total constituent and leachate analyses conducted on the waste. The leachate was obtained using the Toxicity Characteristic Leaching Procedure (TCLP) as outlined in later sections of this background document.

BDAT standards have been established based on performance data obtained from a treatment train consisting of acid leaching followed by chemical oxidation followed by a dewatering/washing step, designed to remove mercury as soluble mercuric chloride. These treatment steps are followed by a treatment train consisting of sulfide precipitation and

filtration for treatment of the wastewater produced in the dewatering step. This treatment is designed to precipitate dissolved mercury from the wastewater as mercuric sulfide. The Agency has examined additional data submitted by industry obtained using an alternative treatment of water washing/dewatering. These additional data indicate that this alternative treatment technology provides less effective treatment of K071 waste.

These standards become effective as of the date established in the final rule for the land disposal restrictions for K071 (40 CFR Section 268.10).

The following table lists the specific BDAT treatment standards for wastes identified as K071. The units for the total waste concentration analysis are mg/kg (parts per million on a weight by weight basis) for nonwastewater and mg/l (parts per million on a weight by volume basis) for wastewater. The leachate standards are based on analysis of a TCLP leachate and are in units of mg/l. Testing procedures for all sample analyses performed are specifically identified in Appendix B of this background document.

BDAT TREATMENT STANDARDS FOR K071

Constituent	Value
Mercury	
Wastewater (total concentration)	0.030 mg/l
Nonwastewater (total concentration)	4.6 mg/kg[a]
Nonwastewater (TCLP)	0.0025 mg/l[a]

[a] Facilities that land dispose of K071 nonwastewater must meet both the total concentration and the TCLP standards.

1. INTRODUCTION

This section of the background document presents a summary of the legal authority pursuant to which the BDAT treatment standards were developed, a summary of EPA's promulgated methodology for developing BDAT, and finally a discussion of the petition process that should be followed to request a variance from the BDAT treatment standards.

1.1 Legal Background

1.1.1 Requirements Under HSWA

The Hazardous and Solid Waste Amendments of 1984 (HSWA), enacted on November 8, 1984, and which amended the Resource Conservation and Recovery Act of 1976 (RCRA), impose substantial new responsibilities on those who handle hazardous waste. In particular, the amendments require the Agency to promulgate regulations that restrict the land disposal of untreated hazardous wastes. In its enactment of HSWA, Congress stated explicitly that "reliance on land disposal should be minimized or eliminated, and land disposal, particularly landfill and surface impoundment, should be the least favored method for managing hazardous wastes" (RCRA section 1002(b)(7), 42 U.S.C. 6901(b)(7)).

One part of the amendments specifies dates on which particular groups of untreated hazardous wastes will be prohibited from land disposal unless "it has been demonstrated to the Administrator, to a reasonable degree of certainty, that there will be no migration of hazardous constituents from the disposal unit or injection zone for as long as the wastes remain hazardous" (RCRA section 3004(d)(1), (e)(1), (g)(5), 42 U.S.C. 6924 (d)(1), (e)(1), (g)(5)).

For the purpose of the restrictions, HSWA defines land disposal "to include, but not be limited to, any placement of . . . hazardous waste in a landfill, surface impoundment, waste pile, injection well, land treatment facility, salt dome formation, salt bed formation, or underground mine or cave" (RCRA section 3004(k), 42 U.S.C. 6924(k)). Although HSWA defines land disposal to include injection wells, such disposal of solvents, dioxins, and certain other wastes, known as the California List wastes, is covered on a separate schedule (RCRA section 3004(f)(2), 42 U.S.C. 6924 (f)(2)). This schedule requires that EPA develop land disposal restrictions for deep well injection by August 8, 1988.

The amendments also require the Agency to set "levels or methods of treatment, if any, which substantially diminish the toxicity of the waste or substantially reduce the likelihood of migration of hazardous constituents from the waste so that short-term and long-term threats to human health and the environment are minimized" (RCRA section 3004(m)(1), 42 U.S.C. 6924 (m)(1)). Wastes that meet treatment standards established by EPA are not prohibited and may be land disposed. In setting treatment standards for listed or characteristic wastes, EPA may establish different standards for particular wastes within a single waste code with differing treatability characteristics. One such characteristic is the physical form of the waste. This frequently leads to different standards for wastewaters and nonwastewaters.

alternatively, EPA can establish a treatment standard that is applicable to more than one waste code when, in EPA's judgment, all the waste can be treated to the same concentration. In those instances where a generator can demonstrate that the standard promulgated for the generator's waste cannot be achieved, the Agency also can grant a variance from a treatment standard by revising the treatment standard for that particular waste through rulemaking procedures. (A further discussion of treatment variances is provided in Section 1.3.)

The land disposal restrictions are effective when promulgated unless the Administrator grants a national variance and establishes a different date (not to exceed 2 years beyond the statutory deadline) based on "the earliest date on which adequate alternative treatment, recovery, or disposal capacity which protects human health and the environment will be available" (RCRA section 3004(h)(2), 42 U.S.C. 6924 (h)(2)).

If EPA fails to set a treatment standard by the statutory deadline for any hazardous waste in the First Third or Second Third of the schedule (see section 1.1.2), the waste may not be disposed in a landfill or surface impoundment unless the facility is in compliance with the minimum technological requirements specified in section 3004(o) of RCRA. In addition, prior to disposal, the generator must certify to the Administrator that the availability of treatment capacity has been investigated and it has been determined that disposal in a landfill or surface impoundment is the only practical alternative to treatment currently available to the generator. This restriction on the use of

landfills and surface impoundments applies until EPA sets a treatment standard for the waste or until May 8, 1990, whichever is sooner. If the Agency fails to set a treatment standard for any ranked hazardous waste by May 8, 1990, the waste is automatically prohibited from land disposal unless the waste is placed in a land disposal unit that is the subject of a successful "no migration" demonstration (RCRA section 3004(g), 42 U.S.C. 6924(g)). "No migration" demonstrations are based on case-specific petitions that show there will be no migration of hazardous constituents from the unit for as long as the waste remains hazardous.

1.1.2 Schedule for Developing Restrictions

Under Section 3004(g) of RCRA, EPA was required to establish a schedule for developing treatment standards for all wastes that the Agency had listed as hazardous by November 8, 1984. Section 3004(g) required that this schedule consider the intrinsic hazards and volumes associated with each of these wastes. The statute required EPA to set treatment standards according to the following schedule:

(a) Solvents and dioxins standards must be promulgated by November 8, 1986;

(b) The "California List" must be promulgated by July 8, 1987;

(c) At least one-third of all listed hazardous wastes must be promulgated by August 8, 1988 (First Third);

(d) At least two-thirds of all listed hazardous wastes must be promulgated by June 8, 1989 (Second Third); and

(e) All remaining listed hazardous wastes and all hazardous wastes identified as of November 8, 1984, by one or more of the characteristics defined in 40 CFR Part 261 must be promulgated by May 8, 1990 (Third Third).

The statute specifically identified the solvent wastes as those covered under waste codes F001, F002, F003, F004, and F005; it identified the dioxin-containing hazardous wastes as those covered under waste codes F020, F021, F022, and F023.

Wastes collectively known as the California List wastes, defined under Section 3004(d) of HSWA, are liquid hazardous wastes containing metals, free cyanides, PCBs, corrosives (i.e., a pH less than or equal to 2.0), and any liquid or nonliquid hazardous waste containing halogenated organic compounds (HOCs) above 0.1 percent by weight. Rules for the California List were proposed on December 11, 1986, and final rules for PCBs, corrosives, and HOC-containing wastes were established August 12, 1987. In that rule, EPA elected not to establish standards for metals. Therefore, the statutory limits became effective.

On May 28, 1986, EPA published a final rule (51 FR 19300) that delineated the specific waste codes that would be addressed by the First Third, Second Third, and Third Third. This schedule is incorporated into 40 CFR 268.10, .11, and .12.

1.2 Summary of Promulgated BDAT Methodology

In a November 7, 1986, rulemaking, EPA promulgated a technology-based approach to establishing treatment standards under section 3004(m). Section 3004(m) also specifies that treatment standards must "minimize" long- and short-term threats to human health and the environment arising from land disposal of hazardous wastes.

Congress indicated in the legislative history accompanying the HSWA that "[t]he requisite levels of [sic] methods of treatment established by the Agency should be the best that has been demonstrated to be achievable," noting that the intent is "to require utilization of available technology" and not a "process which contemplates technology-forcing standards" (Vol. 130 Cong. Rec. S9178 (daily ed., July 25, 1984)). EPA has interpreted this legislative history as suggesting that Congress considered the requirement under 3004(m) to be met by application of the best demonstrated and achievable (i.e., available) technology prior to land disposal of wastes or treatment residuals. Accordingly, EPA's treatment standards are generally based on the performance of the best demonstrated available technology (BDAT) identified for treatment of the hazardous constituents. This approach involves the identification of potential treatment systems, the determination of whether they are demonstrated and available, and the collection of treatment data from well-designed and well-operated systems.

The treatment standards, according to the statute, can represent levels or methods of treatment, if any, that substantially diminish the toxicity of the waste or substantially reduce the likelihood of migration of hazardous constituents. Wherever possible, the Agency prefers to establish BDAT treatment standards as "levels" of treatment (i.e., performance standards) rather than adopting an approach that would require the use of specific treatment "methods." EPA believes that concentration-based treatment levels offer the regulated community greater

flexibility to develop and implement compliance strategies as well as an incentive to develop innovative technologies.

1.2.1 Waste Treatability Group

In developing the treatment standards, EPA first characterizes the waste(s). As necessary, EPA may establish treatability groups for wastes having similar physical and chemical properties. That is, if EPA believes that wastes represented by different waste codes could be treated to similar concentrations using identical technologies, the Agency combines the codes into one treatability group. EPA generally considers wastes to be similar when they are both generated from the same industry and from similar processing stages. In addition, EPA may combine two or more separate wastes into the same treatability group when data are available showing that the waste characteristics affecting performance are similar or that one waste would be expected to be less difficult to treat.

Once the treatability groups have been established, EPA collects and analyzes data on identified technologies used to treat the wastes in each treatability group. The technologies evaluated must be demonstrated on the waste or a similar waste and must be available for use.

1.2.2 Demonstrated and Available Treatment Technologies

Consistent with legislative history, EPA considers demonstrated technologies to be those that are used to treat the waste of interest or a similar waste with regard to parameters that affect treatment selection (see November 7, 1986, 51 FR 40588). EPA also will consider as treatment those technologies used to separate or otherwise process chemicals and

other materials. Some of these technologies clearly are applicable to waste treatment, since the wastes are similar to raw materials processed in industrial applications.

For most of the waste treatability groups for which EPA will promulgate treatment standards, EPA will identify demonstrated technologies either through review of literature related to current waste treatment practices or on the basis of information provided by specific facilities currently treating the waste or similar wastes.

In cases where the Agency does not identify any facilities treating wastes represented by a particular waste treatability group, EPA may transfer a finding of demonstrated treatment. To do this, EPA will compare the parameters affecting treatment selection for the waste treatability group of interest to other wastes for which demonstrated technologies already have been determined. The parameters affecting treatment selection and their use for this waste are described in Section 3.2 of this document. If the parameters affecting treatment selection are similar, then the Agency will consider the treatment technology also to be demonstrated for the waste of interest. For example, EPA considers rotary kiln incineration a demonstrated technology for many waste codes containing hazardous organic constituents, high total organic content, and high filterable solids content, regardless of whether any facility is currently treating these wastes. The basis for this determination is data found in literature and data generated by EPA confirming the use of rotary kiln incineration on wastes having the above characteristics.

If no commercial treatment or recovery operations are identified for a waste or wastes with similar physical or chemical characteristics that affect treatment selection, the Agency will be unable to identify any demonstrated treatment technologies for the waste, and, accordingly, the waste will be prohibited from land disposal (unless handled in accordance with the exemption and variance provisions of the rule). The Agency is, however, committed to establishing treatment standards as soon as new or improved treatment processes are demonstrated (and available).

Operations only available at research facilities, pilot- and bench-scale operations will not be considered in identifying demonstrated treatment technologies for a waste because these technologies would not necessarily be "demonstrated." Nevertheless, EPA may use data generated at research facilities in assessing the performance of demonstrated technologies.

As discussed earlier, Congress intended that technologies used to establish treatment standards under Section 3004(m) be not only "demonstrated," but also available. To decide whether demonstrated technologies may be considered "available," the Agency determines whether they (1) are commercially available and (2) substantially diminish the toxicity of the waste or substantially reduce the likelihood of migration of hazardous constituents from the waste.

EPA will only set treatment standards based on a technology that meets the above criteria. Thus, the decision to classify a technology as "unavailable" will have a direct impact on the treatment standard. If

the best technology is unavailable, the treatment standard will be based on the next best treatment technology determined to be available. To the extent that the resulting treatment standards are less stringent, greater concentrations of hazardous constituents in the treatment residuals could be placed in land disposal units.

There also may be circumstances in which EPA concludes that for a given waste none of the demonstrated treatment technologies are "available" for purposes of establishing the 3004(m) treatment performance standards. Subsequently, these wastes will be prohibited from continued placement in or on the land unless managed in accordance with applicable exemptions and variance provisions. The Agency is, however, committed to establishing new treatment standards as soon as new or improved treatment processes become "available."

(1) Proprietary or Patented Processes. If the demonstrated treatment technology is a proprietary or patented process that is not generally available, EPA will not consider the technology in its determination of the treatment standards. EPA will consider proprietary or patented processes available if it determines that the treatment method can be purchased or licensed from the proprietor or is commercially available treatment. The services of the commercial facility offering this technology often can be purchased even if the technology itself cannot be purchased.

(2) Substantial Treatment. To be considered "available," a demonstrated treatment technology must "substantially diminish the

toxicity" of the waste or "substantially reduce the likelihood of migration of hazardous constituents" from the waste in accordance with section 3004(m). By requiring that substantial treatment be achieved in order to set a treatment standard, the statute ensures that all wastes are adequately treated before being placed in or on the land and ensures that the Agency does not require a treatment method that provides little or no environmental benefit. Treatment will always be deemed substantial if it results in nondetectable levels of the hazardous constituents of concern. If nondetectable levels are not achieved, then a determination of substantial treatment will be made on a case-by-case basis. This approach is necessary because of the difficulty of establishing a meaningful guideline that can be applied broadly to the many wastes and technologies to be considered. EPA will consider the following factors in an effort to evaluate whether a technology provides substantial treatment on a case-by-case basis:

(a) Number and types of constituents treated;

(b) Performance (concentration of the constituents in the treatment residuals); and

(c) Percent of constituents removed.

If none of the demonstrated treatment technologies achieve substantial treatment of a waste, the Agency cannot establish treatment standards for the constituents of concern in that waste.

1.2.3 Collection of Performance Data

Performance data on the demonstrated available technologies are evaluated by the Agency to determine whether the data are representative

of well-designed and well-operated treatment systems. Only data from well-designed and well-operated systems are included in determining BDAT. The data evaluation includes data already collected directly by EPA and/or data provided by industry. In those instances where additional data are needed to supplement existing information, EPA collects additional data through a sampling and analysis program. The principal elements of this data collection program are: (a) identification of facilities for site visits, (b) engineering site visit, (c) Sampling and Analysis Plan, (d) sampling visit, and (e) Onsite Engineering Report.

(1) Identification of Facilities for Site Visits. To identify facilities that generate and/or treat the waste of concern, EPA uses a number of information sources. These include Stanford Research Institute's Directory of Chemical Producers, EPA's Hazardous Waste Data Management System (HWDMS), the 1986 Treatment, Storage, Disposal Facility (TSDF) National Screening Survey, and EPA's Industry Studies Data Base. In addition, EPA contacts trade associations to inform them that the Agency is considering visits to facilities in their industry and to solicit assistance in identifying facilities for EPA to consider in its treatment sampling program.

After identifying facilities that treat the waste, EPA uses this hierarchy to select sites for engineering visits: (1) generators treating single wastes on site; (2) generators treating multiple wastes together on site; (3) commercial treatment, storage, and disposal facilities

(TSDFs); and (4) EPA in-house treatment. This hierarchy is based on two concepts: (1) to the extent possible, EPA should develop treatment standards from data produced by treatment facilities handling only a single waste, and (2) facilities that routinely treat a specific waste have had the best opportunity to optimize design parameters. Although excellent treatment can occur at many facilities that are not high in this hierarchy, EPA has adopted this approach to avoid, when possible, ambiguities related to the mixing of wastes before and during treatment.

When possible, the Agency will evaluate treatment technologies using commercially operated systems. If performance data from properly designed and operated commercial treatment methods for a particular waste or a waste judged to be similar are not available, EPA may use data from research facilities operations. Whenever research facility data are used, EPA will explain why such data were used in the preamble and background document and will request comments on the use of such data.

Although EPA's data bases provide information on treatment for individual wastes, the data bases rarely provide data that support the selection of one facility for sampling over another. In cases where several treatment sites appear to fall into the same level of the hierarchy, EPA selects sites for visits strictly on the basis of which facility could most expeditiously be visited and later sampled if justified by the engineering visit.

(2) Engineering Site Visit. Once a treatment facility has been selected, an engineering site visit is made to confirm that a candidate for sampling meets EPA's criteria for a well-designed facility and to ensure that the necessary sampling points can be accessed to determine operating parameters and treatment effectiveness. During the visit, EPA also confirms that the facility appears to be well operated, although the actual operation of the treatment system during sampling is the basis for EPA's decisions regarding proper operation of the treatment unit. In general, the Agency considers a well-designed facility to be one that contains the unit operations necessary to treat the various hazardous constituents of the waste as well as to control other nonhazardous materials in the waste that may affect treatment performance.

In addition to ensuring that a system is reasonably well designed, the engineering visit examines whether the facility has a way to measure the operating parameters that affect performance of the treatment system during the waste treatment period. For example, EPA may choose not to sample a treatment system that operates in a continuous mode, for which an important operating parameter cannot be continuously recorded. In such systems, instrumentation is important in determining whether the treatment system is operating at design values during the waste treatment period.

(3) Sampling and Analysis Plan. If after the engineering site visit the Agency decides to sample a particular plant, the Agency will then develop a site-specific Sampling and Analysis Plan (SAP) according to the Generic Quality Assurance Project Plan for the Land Disposal Restriction

Program ("BDAT"), EPA/530-SW-87-011. In brief, the SAP discusses where the Agency plans to sample, how the samples will be taken, the frequency of sampling, the constituents to be analyzed and the method of analysis, operational parameters to be obtained, and specific laboratory quality control checks on the analytical results.

The Agency will generally produce a draft of the site-specific Sampling and Analysis Plan within 2 to 3 weeks of the engineering visit. The draft of the SAP is then sent to the plant for review and comment. With few exceptions, the draft SAP should be a confirmation of data collection activities discussed with the plant personnel during the engineering site visit. EPA encourages plant personnel to recommend any modifications to the SAP that they believe will improve the quality of the data.

It is important to note that sampling of a plant by EPA does not mean that the data will be used in the development of treatment standards for BDAT. EPA's final decision on whether to use data from a sampled plant depends on the actual analysis of the waste being treated and on the operating conditions at the time of sampling. Although EPA would not plan to sample a facility that was not ostensibly well-designed and well-operated, there is no way to ensure that at the time of the sampling the facility will not experience operating problems. Additionally, EPA statistically compares its test data to suitable industry-provided data, where available, in its determination of what data to use in developing treatment standards. The methodology for comparing data is presented later in this section.

(Note: Facilities wishing to submit data for consideration in the development of BDAT standards should, to the extent possible, provide sampling information similar to that acquired by EPA. Such facilities should review the Generic Quality Assurance Project Plan for the Land Disposal Restriction Program ("BDAT"), which delineates all of the quality control and quality assurance measures associated with sampling and analysis. Quality assurance and quality control procedures are summarized in Section 1.2.6 of this document.)

(4) Sampling Visit. The purpose of the sampling visit is to collect samples that characterize the performance of the treatment system and to document the operating conditions that existed during the waste treatment period. At a minimum, the Agency attempts to collect sufficient samples of the untreated waste and solid and liquid treatment residuals so that variability in the treatment process can be accounted for in the development of the treatment standards. To the extent practicable, and within safety constraints, EPA or its contractors collect all samples and ensure that chain-of-custody procedures are conducted so that the integrity of the data is maintained.

In general, the samples collected during the sampling visit will have already been specified in the SAP. In some instances, however, EPA will not be able to collect all planned samples because of changes in the facility operation or plant upsets; EPA will explain any such deviations from the SAP in its follow-up Onsite Engineering Report.

(5) Onsite Engineering Report. EPA summarizes all its data collection activities and associated analytical results for testing at a facility in a report referred to as the Onsite Engineering Report (OER). This report characterizes the waste(s) treated, the treated residual concentrations, the design and operating data, and all analytical results including methods used and accuracy results. This report also describes any deviations from EPA's suggested analytical methods for hazardous wastes (Test Methods for Evaluating Solid Waste, SW-846, Third Edition, November 1986).

After the Onsite Engineering Report is completed, the report is submitted to the plant for review. This review provides the plant with a final opportunity to claim any information contained in the report as confidential. Following the review and incorporation of comments, as appropriate, the report is made available to the public with the exception of any material claimed as confidential by the plant.

1.2.4 Hazardous Constituents Considered and Selected for Regulation

(1) Development of BDAT List. The list of hazardous constituents within the waste codes that are targeted for treatment is referred to by the Agency as the BDAT constituent list. This list, provided as Table 1-1, is derived from the constituents presented in 40 CFR Part 261, Appendix VII and Appendix VIII, as well as several ignitable constituents used as the basis of listing wastes as F003 and F005. These sources provide a comprehensive list of hazardous constituents specifically regulated under RCRA. The BDAT list consists of those constituents that can be analyzed using methods published in SW-846, Third Edition.

Table 1-1 BDAT Constituent List

BDAT reference no	Parameter	Cas no.
	Volatiles	
222.	Acetone	67-64-1
1.	Acetonitrile	75-05-8
2.	Acrolein	107-02-8
3.	Acrylonitrile	107-13-1
4.	Benzene	71-43-2
5.	Bromodichloromethane	75-27-4
6.	Bromomethane	74-83-9
223.	n-Butyl alcohol	71-36-3
7	Carbon tetrachloride	56-23-5
8.	Carbon disulfide	75-15-0
9.	Chlorobenzene	108-90-7
10.	2-Chloro-1,3-butadiene	126-99-8
11	Chlorodibromomethane	124-48-1
12.	Chloroethane	75-00-3
13.	2-Chloroethyl vinyl ether	110-75-8
14.	Chloroform	67-66-3
15	Chloromethane	74-87-3
16.	3-Chloropropene	107-05-1
17	1,2-Dibromo-3-chloropropane	96-12-8
18	1,2-Dibromoethane	106-93-4
19	Dibromomethane	74-95-3
20.	Trans-1,4-Dichloro-2-butene	110-57-6
21	Dichlorodifluoromethane	75-71-8
22	1,1-Dichloroethane	75-34-3
23	1,2-Dichloroethane	107-06-2
24	1,1-Dichloroethylene	75-35-4
25	Trans-1,2-Dichloroethene	156-60-5
26	1,2-Dichloropropane	78-87-5
27	Trans-1,3-Dichloropropene	10061-02-6
28.	cis-1,3-Dichloropropene	10061-01-5
29	1,4-Dioxane	123-91-1
224	2-Ethoxyethanol	110-80-5
225	Ethyl acetate	141-78-6
226	Ethyl benzene	100-41-4
30.	Ethyl cyanide	107-12-0
227	Ethyl ether	60-29-7
31	Ethyl methacrylate	97-63-2
214	Ethylene oxide	75-21-8
32	Iodomethane	74-88-4

Table 1-1 (continued)

BDAT reference no.	Parameter	Cas no.
	Volatiles (continued)	
33.	Isobutyl alcohol	78-83-1
228.	Methanol	67-56-1
34.	Methyl ethyl ketone	78-93-3
229.	Methyl isobutyl ketone	108-10-1
35.	Methyl methacrylate	80-62-6
37.	Methacrylonitrile	126-98-7
38.	Methylene chloride	75-09-2
230.	2-Nitropropane	79-46-9
39.	Pyridine	110-86-1
40.	1,1,1,2-Tetrachloroethane	630-20-6
41.	1,1,2,2-Tetrachloroethane	79-34-6
42.	Tetrachloroethene	127-18-4
43.	Toluene	108-88-3
44.	Tribromomethane	75-25-2
45.	1,1,1-Trichloroethane	71-55-6
46.	1,1,2-Trichloroethane	79-00-5
47.	Trichloroethene	79-01-6
48.	Trichloromonofluoromethane	75-69-4
49.	1,2,3-Trichloropropane	96-18-4
231.	1,1,2-Trichloro-1,2,2-trifluoro-ethane	76-13-1
50.	Vinyl chloride	75-01-4
215.	1,2-Xylene	97-47-6
216.	1,3-Xylene	108-38-3
217.	1,4-Xylene	106-44-5
	Semivolatiles	
51.	Acenaphthalene	208-96-8
52.	Acenaphthene	83-32-9
53.	Acetophenone	96-86-2
54.	2-Acetylaminofluorene	53-96-3
55.	4-Aminobiphenyl	92-67-1
56.	Aniline	62-53-3
57.	Anthracene	120-12-7
58.	Aramite	140-57-8
59.	Benz(a)anthracene	56-55-3
218.	Benzal chloride	98-87-3
60.	Benzenethiol	108-98-5
61.	Deleted	
62.	Benzo(a)pyrene	50-32-8

Table 1-1 (continued)

BDAT reference no.	Parameter	CAS no.
	Semivolatiles (continued)	
63.	Benzo(b)fluoranthene	205-99-2
64.	Benzo(ghi)perylene	191-24-2
65.	Benzo(k)fluoranthene	207-08-9
66.	p-Benzoquinone	106-51-4
67.	Bis(2-chloroethoxy)methane	111-91-1
68.	Bis(2-chloroethyl)ether	111-44-4
69.	Bis(2-chloroisopropyl)ether	39638-32-9
70.	Bis(2-ethylhexyl)phthalate	117-81-7
71.	4-Bromophenyl phenyl ether	101-55-3
72.	Butyl benzyl phthalate	85-68-7
73.	2-sec-Butyl-4,6-dinitrophenol	88-85-7
74.	p-Chloroaniline	106-47-8
75.	Chlorobenzilate	510-15-6
76.	p-Chloro-m-cresol	59-50-7
77.	2-Chloronaphthalene	91-58-7
78.	2-Chlorophenol	95-57-8
79.	3-Chloropropionitrile	542-76-7
80.	Chrysene	218-01-9
81.	ortho-Cresol	95-48-7
82.	para-Cresol	106-44-5
232.	Cyclohexanone	108-94-1
83.	Dibenz(a,h)anthracene	53-70-3
84.	Dibenzo(a,e)pyrene	192-65-4
85.	Dibenzo(a,i)pyrene	189-55-9
86.	m-Dichlorobenzene	541-73-1
87.	o-Dichlorobenzene	95-50-1
88.	p-Dichlorobenzene	106-46-7
89.	3,3'-Dichlorobenzidine	91-94-1
90.	2,4-Dichlorophenol	120-83-2
91.	2,6-Dichlorophenol	87-65-0
92.	Diethyl phthalate	84-66-2
93.	3,3'-Dimethoxybenzidine	119-90-4
94.	p-Dimethylaminoazobenzene	60-11-7
95.	3,3'-Dimethylbenzidine	119-93-7
96.	2,4-Dimethylphenol	105-67-9
97.	Dimethyl phthalate	131-11-3
98.	Di-n-butyl phthalate	84-74-2
99.	1,4-Dinitrobenzene	100-25-4
100.	4,6-Dinitro-o-cresol	534-52-1
101	2,4-Dinitrophenol	51-28-5

Table 1-1 (continued)

BDAT reference no	Parameter	CAS no.
	Semivolatiles (continued)	
102.	2,4-Dinitrotoluene	121-14-2
103.	2,6-Dinitrotoluene	606-20-2
104.	Di-n-octyl phthalate	117-84-0
105.	Di-n-propylnitrosamine	621-64-7
106.	Diphenylamine	122-39-4
219.	Diphenylnitrosamine	86-30-6
107.	1,2-Diphenylhydrazine	122-66-7
108.	Fluoranthene	206-44-0
109.	Fluorene	86-73-7
110.	Hexachlorobenzene	118-74-1
111.	Hexachlorobutadiene	87-68-3
112.	Hexachlorocyclopentadiene	77-47-4
113.	Hexachloroethane	67-72-1
114.	Hexachlorophene	70-30-4
115.	Hexachloropropene	1888-71-7
116.	Indeno(1,2,3-cd)pyrene	193-39-5
117.	Isosafrole	120-58-1
118.	Methapyrilene	91-80-5
119.	3-Methylcholanthrene	56-49-5
120.	4,4'-Methylenebis (2-chloroaniline)	101-14-4
36.	Methyl methanesulfonate	66-27-3
121.	Naphthalene	91-20-3
122.	1,4-Naphthoquinone	130-15-4
123.	1-Naphthylamine	134-32-7
124.	2-Naphthylamine	91-59-8
125.	p-Nitroaniline	100-01-6
126.	Nitrobenzene	98-95-3
127.	4-Nitrophenol	100-02-7
128.	N-Nitrosodi-n-butylamine	924-16-3
129.	N-Nitrosodiethylamine	55-18-5
130.	N-Nitrosodimethylamine	62-75-9
131.	N-Nitrosomethylethylamine	10595-95-6
132.	N-Nitrosomorpholine	59-89-2
133.	N-Nitrosopiperidine	100-75-4
134.	n-Nitrosopyrrolidine	930-55-2
135.	5-Nitro-o-toluidine	99-65-8
136.	Pentachlorobenzene	608-93-5
137.	Pentachloroethane	76-01-7
138.	Pentachloronitrobenzene	82-68-8

Table 1-1 (continued)

BDAT reference no.	Parameter	CAS no.
	Semivolatiles (continued)	
139.	Pentachlorophenol	87-86-5
140.	Phenacetin	62-44-2
141.	Phenanthrene	85-01-8
142.	Phenol	108-95-2
220.	Phthalic anhydride	85-44-9
143.	2-Picoline	109-06-8
144.	Pronamide	23950-58-5
145.	Pyrene	129-00-0
146.	Resorcinol	108-46-3
147.	Safrole	94-59-7
148.	1,2,4,5-Tetrachlorobenzene	95-94-3
149.	2,3,4,6-Tetrachlorophenol	58-90-2
150.	1,2,4-Trichlorobenzene	120-82-1
151.	2,4,5-Trichlorophenol	95-95-4
152.	2,4,6-Trichlorophenol	88-06-2
153.	Tris(2,3-dibromopropyl) phosphate	126-72-7
	Metals	
154.	Antimony	7440-36-0
155.	Arsenic	7440-38-2
156.	Barium	7440-39-3
157.	Beryllium	7440-41-7
158.	Cadmium	7440-43-9
159.	Chromium (total)	7440-47-32
221.	Chromium (hexavalent)	-
160.	Copper	7440-50-8
161.	Lead	7439-92-1
162.	Mercury	7439-97-6
163.	Nickel	7440-02-0
164.	Selenium	7782-49-2
165.	Silver	7440-22-4
166.	Thallium	7440-28-0
167.	Vanadium	7440-62-2
168.	Zinc	7440-66-6
	Inorganics	
169.	Cyanide	57-12-5
170.	Fluoride	16964-48-8
171.	Sulfide	8496-25-8

Table 1-1 (continued)

BDAT reference no.	Parameter	CAS no.
	Organochlorine pesticides	
172.	Aldrin	309-00-2
173.	alpha-BHC	319-84-6
174.	beta-BHC	319-85-7
175.	delta-BHC	319-86-8
176.	gamma-BHC	58-89-9
177.	Chlordane	57-74-9
178.	DDD	72-54-8
179.	DDE	72-55-9
180.	DDT	50-29-3
181.	Dieldrin	60-57-1
182.	Endosulfan I	939-98-8
183.	Endosulfan II	33213-6-5
184.	Endrin	72-20-8
185.	Endrin aldehyde	7421-93-4
186.	Heptachlor	76-44-8
187.	Heptachlor epoxide	1024-57-3
188.	Isodrin	465-73-6
189.	Kepone	143-50-0
190.	Methoxyclor	72-43-5
191.	Toxaphene	8001-35-2
	Phenoxyacetic acid herbicides	
192.	2,4-Dichlorophenoxyacetic acid	94-75-7
193.	Silvex	93-72-1
194.	2,4,5-T	93-76-5
	Organophosphorous insecticides	
195.	Disulfoton	298-04-4
196.	Famphur	52-85-7
197.	Methyl parathion	298-00-0
198.	Parathion	56-38-2
199.	Phorate	298-02-2
	PCBs	
200.	Aroclor 1016	12674-11-2
201.	Aroclor 1221	11104-28-2
202.	Aroclor 1232	11141-16-5

Table 1-1 (continued)

BDAT reference no.	Parameter	CAS no.
	PCBs (continued)	
203.	Aroclor 1242	53469-21-9
204.	Aroclor 1248	12672-29-6
205.	Aroclor 1254	11097-69-1
206.	Aroclor 1260	11096-82-5
	Dioxins and furans	
207.	Hexachlorodibenzo-p-dioxins	-
208.	Hexachlorodibenzofurans	-
209.	Pentachlorodibenzo-p-dioxins	-
210.	Pentachlorodibenzofurans	-
211.	Tetrachlorodibenzo-p-dioxins	-
212.	Tetrachlorodibenzofurans	-
213.	2,3,7,8-Tetrachlorodibenzo-p-dioxin	1746-01-6

The initial BDAT constituent list was published in EPA's Generic Quality Assurance Project Plan, March 1987 (EPA/530-SW-87-011). Additional constituents will be added to the BDAT constituent list as additional key constituents are identified for specific waste codes or as new analytical methods are developed for hazardous constituents. For example, since the list was published in March 1987, eighteen additional constituents (hexavalent chromium, xylene (all three isomers), benzal chloride, phthalic anhydride, ethylene oxide, acetone, n-butyl alcohol, 2-ethoxyethanol, ethyl acetate, ethyl benzene, ethyl ether, methanol, methyl isobutyl ketone, 2-nitropropane, 1,1,2-trichloro-1,2,2-trifluoroethane, and cyclohexanone) have been added to the list.

Chemicals are listed in Appendix VIII if they are shown in scientific studies to have toxic, carcinogenic, mutagenic, or teratogenic effects on humans or other life-forms, and they include such substances as those identified by the Agency's Carcinogen Assessment Group as being carcinogenic. Including a constituent in Appendix VIII means that the constituent can be cited as a basis for listing toxic wastes.

Although Appendix VII, Appendix VIII, and the F003 and F005 ignitables provide a comprehensive list of RCRA-regulated hazardous constituents, not all of the constituents can be analyzed in a complex waste matrix. Therefore, constituents that could not be readily analyzed in an unknown waste matrix were not included on the initial BDAT list. As mentioned above, however, the BDAT constituent list is a continuously growing list that does not preclude the addition of new constituents when analytical methods are developed.

There are 5 major reasons that constituents were not included on the BDAT constituent list:

(a) Constituents are unstable. Based on their chemical structure, some constituents will either decompose in water or will ionize. For example, maleic anhydride will form maleic acid when it comes in contact with water and copper cyanide will ionize to form copper and cyanide ions. However, EPA may choose to regulate the decomposition or ionization products.

(b) EPA-approved or verified analytical methods are not available. Many constituents, such as 1,3,5-trinitrobenzene, are not measured adequately or even detected using any of EPA's analytical methods published in SW-846 Third Edition.

(c) The constituent is a member of a chemical group designated in Appendix VIII as not otherwise specified (N.O.S.). Constituents listed as N.O.S., such as chlorinated phenols, are a generic group of some types of chemicals for which a single analytical procedure is not available. The individual members of each such group need to be listed to determine whether the constituents can be analyzed. For each N.O.S. group, all those constituents that can be readily analyzed are included in the BDAT constituents list.

(d) Available analytical procedures are not appropriate for a complex waste matrix. Some compounds, such as auramine, can be analyzed as a pure constituent. However, in the presence of other constituents, the recommended analytical method does not positively identify the constituent. The use of high pressure liquid chromotography (HPLC) presupposes a high expectation of finding the specific constituents of interest. In using this procedure to screen samples, protocols would have to be developed on a case-specific basis to verify the identity of constituents present in the samples. Therefore, HPLC is not an appropriate analytical procedure for complex samples containing unkown constituents.

(e) Standards for analytical instrument calibration are not commercially available. For several constituents, such as benz(c)acridine, commercially available standards of a "reasonably" pure grade are not available. The unavailability of a standard was determined by a review of catalogs from specialty chemical manufacturers.

Two constituents (fluoride and sulfide) are not specifically included in Appendices VII and VIII; however, these compounds are included on the BDAT list as indicator constituents for compounds from Appendices VII and VIII such as hydrogen fluoride and hydrogen sulfide, which ionize in water.

The BDAT constituent list presented in Table 1-1 is divided into the following nine groups:

- Volatile organics
- Semivolatile organics
- Metals
- Other inorganics
- Organochlorine pesticides
- Phenoxyacetic acid herbicides
- Organophosphorous insecticides
- PCBs
- Dioxins and furans

The constituents were placed in these categories based on their chemical properties. The constituents in each group are expected to behave similarily during treatment and are also analyzed, with the exception of the metals and inorganics, by using the same analytical methods.

(2) Constituent Selection Analysis. The constituents that the Agency selects for regulation in each treatability group are, in general, those found in the untreated wastes at treatable concentrations. For certain waste codes, the target list for the untreated waste may have been shortened (relative to analyses performed to test treatment technologies) because of the extreme unlikelihood of the constituent being present.

In selecting constituents for regulation, the first step is to summarize all the constituents that were found in the untreated waste at treatable concentrations. This process involves the use of the statistical analysis of variance (ANOVA) test, described in Section 1.2.6, to determine if constituent reductions were significant. The Agency interprets a significant reduction in concentration as evidence that the technology actually "treats" the waste.

There are some instances where EPA may regulate constituents that are not found in the untreated waste but are detected in the treated residual. This is generally the case where presence of the constituents in the untreated waste interferes with the quantification of the constituent of concern. In such instances, the detection levels of the constituent are relatively high, resulting in a finding of "not detected" when, in fact, the constituent is present in the waste.

After determining which of the constituents in the untreated waste are present at treatable concentrations, EPA develops a list of potential constituents for regulation. The Agency then reviews this list to determine if any of these constituents can be excluded from regulation because they would be controlled by regulation of other constituents in the list.

EPA performs this indicator analysis for two reasons: (1) it reduces the analytical cost burdens on the treater and (2) it facilitates implementation of the compliance and enforcement program. EPA's rationale for selection of regulated constituents for this waste code is presented in Section 5 of this background document.

(3) Calculation of Standards. The final step in the calculation of the BDAT treatment standard is the multiplication of the average treatment value by a factor referred to by the Agency as the variability factor. This calculation takes into account that even well-designed and well-operated treatment systems will experience some fluctuations in performance. EPA expects that fluctuations will result from inherent mechanical limitations in treatment control systems, collection of treated samples, and analysis of these samples. All of the above fluctuations can be expected to occur at well-designed and well-operated treatment facilities. Therefore, setting treatment standards utilizing a variability factor should be viewed not as a relaxing of 3004(m) requirements, but rather as a function of the normal variability of the treatment processes. A treatment facility will have to be designed to meet the mean achievable treatment performance level to ensure that the performance levels remain within the limits of the treatment standard.

The Agency calculates a variability factor for each constituent of concern within a waste treatability group using the statistical calculation presented in Appendix A. The equation for calculating the variability factor is the same as that used by EPA for the development of numerous regulations in the Effluent Guidelines Program under the Clean Water Act. The variability factor establishes the instantaneous maximum based on the 99th percentile value.

There is an additional step in the calculation of the treatment standards in those instances where the ANOVA analysis shows that more

than one technology achieves a level of performance that represents BDAT. In such instances, the BDAT treatment standard is calculated by first averaging the mean performance value for each technology for each constituent of concern and then multiplying that value by the highest variability factor among the technologies considered. This procedure ensures that all the BDAT technologies used as the basis for the standards will achieve full compliance.

1.2.5 Compliance with Performance Standards

All the treatment standards reflect performance achieved by the Best Demonstrated Available Technology (BDAT). As such, compliance with these standards only requires that the treatment level be achieved prior to land disposal. It does not require the use of any particular treatment technology. While dilution of the waste as a means to comply with the standard is prohibited, wastes that are generated in such a way as to naturally meet the standard can be land disposed without treatment. With the exception of treatment standards that prohibit land disposal, all treatment standards proposed are expressed as a concentration level.

EPA has used both total constituent concentration and TCLP analyses of the treated waste as a measure of technology performance. EPA's rationale for when each of these analytical tests is used is explained in the following discussion.

For all organic constituents, EPA is basing the treatment standards on the total constituent concentration found in the treated waste. EPA based its decision on the fact that technologies exist to destroy the

various organics compounds. Accordingly, the best measure of performance would be the extent to which the various organic compounds have been destroyed or the total amount of constituent remaining after treatment. (NOTE: EPA's land disposal restrictions for solvent waste codes F001-F005 (51 FR 40572) uses the TCLP value as a measure of performance. At the time that EPA promulgated the treatment standards for F001-F005, useful data were not available on total constituent concentrations in treated residuals and, as a result, the TCLP data were considered to be the best measure of performance.)

For all metal constituents, EPA is using both total constituent concentration and/or the TCLP as the basis for treatment standards. The total constituent concentration is being used when the technology basis includes a metal recovery operation. The underlying principle of metal recovery is the reduction of the amount of metal in a waste by separating the metal for recovery; therefore, total constituent concentration in the treated residual is an important measure of performance for this technology. Additionally, EPA also believes that it is important that any remaining metal in a treated residual waste not be in a state that is easily leachable; accordingly, EPA is also using the TCLP as a measure of performance. It is important to note that for wastes for which treatment standards are based on a metal recovery process, the facility has to comply with both the total constituent concentration and the TCLP prior to land disposal.

In cases where treatment standards for metals are not based on recovery techniques but rather on stabilization, EPA is using only the TCLP as a measure of performance. The Agency's rationale is that stabilization is not meant to reduce the concentration of metal in a waste but only to chemically minimize the ability of the metal to leach.

1.2.6 Identification of BDAT

(1) Screening of Treatment Data. This section explains how the Agency determines which of the treatment technologies represent treatment by BDAT. The first activity is to screen the treatment performance data from each of the demonstrated and available technologies according to the following criteria:

(a) Design and operating data associated with the treatment data must reflect a well-designed, well-operated system for each treatment data point. (The specific design and operating parameters for each demonstrated technology for this waste code are discussed in Section 3.2 of this document.)

(b) Sufficient QA/QC data must be available to determine the true values of the data from the treated waste. This screening criterion involves adjustment of treated data to take into account that the type value may be different from the measured value. This discrepancy generally is caused by other constituents in the waste that can mask results or otherwise interfere with the analysis of the constituent of concern.

(c) The measure of performance must be consistent with EPA's approach to evaluating treatment by type of constituents (e.g., total concentration data for organics, and total concentration and TCLP for metals in the leachate from the residual).

In the absence of data needed to perform the screening analysis, EPA will make decisions on a case-by-case basis of whether to include the data. The factors included in this case-by-case analysis will be the

actual treatment levels achieved, the availability of the treatment data and their completeness (with respect to the above criteria), and EPA's assessment of whether the untreated waste represents the waste code of concern. EPA's application of these screening criteria for this waste code are provided in Section 4 of this background document.

(2) Comparison of Treatment Data. In cases in which EPA has treatment data from more than one technology following the screening activity, EPA uses the statistical method known as analysis of variance (ANOVA) to determine if one technology performs significantly better. This statistical method (summarized in Appendix A) provides a measure of the differences between two data sets. If EPA finds that one technology performs significantly better (i.e., the data sets are not homogeneous), BDAT treatment standards are the level of performance achieved by the best technology multiplied by the corresponding variability factor for each regulated constituent.

If the differences in the data sets are not statistically significant, the data sets are said to be homogeneous. Specifically, EPA uses the analysis of variance to determine whether BDAT represents a level of performance achieved by only one technology or represents a level of performance achieved by more than one (or all) of the technologies. If the Agency finds that the levels of performance for one or more technologies are not statistically different, EPA averages the performance values achieved by each technology and then multiplies this value by the largest variability factor associated with any of the

acceptable technologies. A detailed discussion of the treatment selection method and an example of how EPA chooses BDAT from multiple treatment systems is provided in Section A-1.

(3) Quality Assurance/Quality Control. This section presents the principal quality assurance/quality control (QA/QC) procedures employed in screening and adjusting the data to be used in the calculation of treatment standards. Additional QA/QC procedures used in collecting and screening data for the BDAT program are presented in EPA's Generic Quality Assurance Project Plan for Land Disposal Restrictions Program ("BDAT") (EPA/530-SW-87-001, March 1987).

To calculate the treatment standards for the Land Disposal Restriction Rules, it is first necessary to determine the recovery value for each constituent (the amount of constituent recovered after spiking, which is the addition of a known amount of the constituent, minus the initial concentration in the samples divided by the amount added) for a spike of the treated residual. Once the recovery value is determined, the following procedures are used to select the appropriate percent recovery value to adjust the analytical data:

(a) If duplicate spike recovery values are available for the constituent of interest, the data are adjusted by the lowest available percent recovery value (i.e., the value that will yield the most conservative estimate of treatment achieved). However, if a spike recovery value of less than 20 percent is reported for a specific constituent, the data are not used to set treatment standards because the Agency does not have sufficient confidence in the reported value to set a national standard.

(b) If data are not available for a specific constituent but are available for an isomer, then the spike recovery data are transferred from the isomer and the data are adjusted using the percent recovery selected according to the procedure described in (a) above.

(c) If data are not available for a specific constituent but are available for a similar class of constituents (e.g., volatile organics, acid-extractable semivolatiles), then spike recovery data available for this class of constituents are transferred. All spike recovery values greater than or equal to 20 percent for a spiked sample are averaged and the constituent concentration is adjusted by the average recovery value. If spiked recovery data are available for more than one sample, the average is calculated for each sample and the data are adjusted by the lowest average value.

(d) If matrix spike recovery data are not available for a set of data to be used to calculate treatment standards, then matrix spike recovery data are transferred from a waste that the Agency believes is a similar matrix (e.g., if the data are for an ash from incineration, then data from other incinerator ashes could be used). While EPA recognizes that transfer of matrix spike recovery data from a similar waste is not an exact analysis, this is considered the best approach for adjusting the data to account for the fact that most analyses do not result in extraction of 100 percent of the constituent. In assessing the recovery data to be transferred, the procedures outlined in (a), (b), and (c) above are followed.

The analytical procedures employed to generate the data used to calculate the treatment standards are listed in Appendix B of this document. In cases where alternatives or equivalent procedures and/or equipment are allowed in EPA's SW-846, Third Edition (November 1986) methods, the specific procedures and equipment used are also documented in this Appendix. In addition, any deviations from the SW-846, Third Edition, methods used to analyze the specific waste matrices are documented. It is important to note that the Agency will use the methods and procedures delineated in Appendix B to enforce the treatment

standards presented in Section 6 of this document. Accordingly, facilities should use these procedures in assessing the performance of their treatment systems.

1.2.7 BDAT Treatment Standards for "Derived-From" and "Mixed" Wastes

(1) Wastes from Treatment Trains Generating Multiple Residues. In a number of instances, the proposed BDAT consists of a series of operations each of which generates a waste residue. For example, the proposed BDAT for a certain waste code is based on solvent extraction, steam stripping, and activated carbon adsorption. Each of these treatment steps generates a waste requiring treatment -- a solvent-containing stream from solvent extraction, a stripper overhead, and spent activated carbon. Treatment of these wastes may generate further residues; for instance, spent activated carbon (if not regenerated) could be incinerated, generating an ash and possibly a scrubber water waste. Ultimately, additional wastes are generated that may require land disposal. With respect to these wastes, the Agency wishes to emphasize the following points:

(a) All of the residues from treating the original listed wastes are likewise considered to be the listed waste by virtue of the derived-from rule contained in 40 CFR Part 261.3(c)(2). (This point is discussed more fully in (2) below.) Consequently, all of the wastes generated in the course of treatment would be prohibited from land disposal unless they satisfy the treatment standard or meet one of the exceptions to the prohibition.

(b) The Agency's proposed treatment standards generally contain a concentration level for wastewaters and a concentration level for nonwastewaters. The treatment standards apply to all of the wastes generated in treating the original prohibited waste. Thus, all solids generated from treating these wastes would have

to meet the treatment standard for nonwastewaters. All derived-from wastes meeting the Agency definition of wastewater (less than 1 percent TOC and less than 1 percent total filterable solids) would have to meet the treatment standard for wastewaters. EPA wishes to make clear that this approach is not meant to allow partial treatment in order to comply with the applicable standard.

(c) The Agency has not performed tests, in all cases, on every waste that can result from every part of the treatment train. However, the Agency's treatment standards are based on treatment of the most concentrated form of the waste. Consequently, the Agency believes that the less concentrated wastes generated in the course of treatment will also be able to be treated to meet this value.

(2) Mixtures and Other Derived-From Residues. There is a further question as to the applicability of the BDAT treatment standards to residues generated not from treating the waste (as discussed above), but from other types of management. Examples are contaminated soil or leachate that is derived from managing the waste. In these cases, the mixture is still deemed to be the listed waste, either because of the derived-from rule (40 CFR Part 261.3(c)(2)(i)) or the mixture rule (40 CFR Part 261.3(a)(2)(iii) and (iv) or because the listed waste is contained in the matrix (see, for example, 40 CFR Part 261.33(d)). The prohibition for the particular listed waste consequently applies to this type of waste.

The Agency believes that the majority of these types of residues can meet the treatment standards for the underlying listed wastes (with the possible exception of contaminated soil and debris for which the Agency is currently investigating whether it is appropriate to establish a separate treatability subcategorization). For the most part, these

residues will be less concentrated than the original listed waste. The Agency's treatment standards also make a generous allowance for process variability by assuming that all treatability values used to establish the standard are lognormally distributed. The waste also might be amenable to a relatively nonvariable form of treatment technology such as incineration. Finally, and perhaps most important, the rules contain a treatability variance that allows a petitioner to demonstrate that its waste cannot be treated to the level specified in the rule (40 CFR Part 268.44(a). This provision provides a safety valve that allows persons with unusual waste matrices to demonstrate the appropriateness of a different standard. The Agency, to date, has not received any petitions under this provision (for example, for residues contaminated with a prohibited solvent waste), indicating, in the Agency's view, that the existing standards are generally achievable.

(3) Residues from Managing Listed Wastes or that Contain Listed Wastes. The Agency has been asked if and when residues from managing hazardous wastes, such as leachate and contaminated ground water, become subject to the land disposal prohibitions. Although the Agency believes this question to be settled by existing rules and interpretative statements, to avoid any possible confusion the Agency will address the question again.

Residues from managing First Third wastes, listed California List wastes, and spent solvent and dioxin wastes are all considered to be subject to the prohibitions for the underlying hazardous waste. Residues

from managing California List wastes likewise are subject to the California List prohibitions when the residues themselves exhibit a characteristic of hazardous waste. This determination stems directly from the derived-from rule in 40 CFR Part 261.3(c)(2) or in some cases from the fact that the waste is mixed with or otherwise contains the listed waste. The underlying principle stated in all of these provisions is that listed wastes remain listed until delisted.

The Agency's historic practice in processing delisting petitions addressing mixing residuals has been to consider them to be the listed waste and to require that delisting petitioners address all constituents for which the derived-from waste (or other mixed waste) was listed. The language in 40 CFR Part 260.22(b) states that mixtures or derived-from residues can be delisted provided a delisting petitioner makes a demonstration identical to that which a delisting petitioner would make for the underlying waste. These residues consequently are treated as the underlying listed waste for delisting purposes. The statute likewise takes this position, indicating that soil and debris that are contaminated with listed spent solvents or dioxin wastes are subject to the prohibition for these wastes even though these wastes are not the originally generated waste, but rather are a residual from management (RCRA section 3004(e)(3)). It is EPA's view that all such residues are covered by the existing prohibitions and treatment standards for the listed hazardous waste that these residues contain and from which they are derived.

1.2.8 Transfer of Treatment Standards

EPA is proposing some treatment standards that are not based on testing of the treatment technology of the specific waste subject to the treatment standard. Instead, the Agency has determined that the constituents present in the subject waste can be treated to the same performance levels as those observed in other wastes for which EPA has previously developed treatment data. EPA believes that transferring treatment performance for use in establishing treatment standards for untested wastes is valid technically in cases where the untested wastes are generated from similar industries, similar processing steps, or have similar waste characteristics affecting performance and treatment selection. Transfer of treatment standards to similar wastes or wastes from similar processing steps requires little formal analysis. However, in the case where only the industry is similar, EPA more closely examines the waste characteristics prior to concluding that the untested waste constituents can be treated to levels associated with tested wastes.

EPA undertakes a two-step analysis when determining whether wastes generated by different processes within a single industry can be treated to the same level of performance. First, EPA reviews the available waste characteristic data to identify those parameters that are expected to affect treatment selection. EPA has identified some of the most important constituents and other parameters needed to select the treatment technology appropriate for a given waste. A detailed discussion of each analysis, including how each parameter was selected for each waste, can be found in the background document for each waste.

Second, when an individual analysis suggests that an untested waste can be treated with the same technology as a waste for which treatment performance data are already available, EPA analyzes a more detailed list of constituents that represent some of the most important waste characteristics that the Agency believes will affect the performance of the technology. By examining and comparing these characteristics, the Agency determines whether the untested wastes will achieve the same level of treatment as the tested waste. Where the Agency determines that the untested waste is easier to treat than the tested waste, the treatment standards can be transferred. A detailed discussion of this transfer process for each waste can be found in later sections of this document.

1.3 Variance from the BDAT Treatment Standard

The Agency recognizes that there may exist unique wastes that cannot be treated to the level specified as the treatment standard. In such a case, a generator or owner/operator may submit a petition to the Administrator requesting a variance from the treatment standard. A particular waste may be significantly different from the wastes considered in establishing treatability groups because the waste contains a more complex matrix that makes it more difficult to treat. For example, complex mixtures may be formed when a restricted waste is mixed with other waste streams by spills or other forms of inadvertent mixing. As a result, the treatability of the restricted waste may be altered such that it cannot meet the applicable treatment standard.

Variance petitions must demonstrate that the treatment standard established for a given waste cannot be met. This demonstration can be

made by showing that attempts to treat the waste by available technologies were not successful or by performing appropriate analyses of the waste, including waste characteristics affecting performance, which demonstrate that the waste cannot be treated to the specified levels. Variances will not be granted based solely on a showing that adequate BDAT treatment capacity is unavailable. (Such demonstrations can be made according to the provisions in Part 268.5 of RCRA for case-by-case extensions of the effective date.) The Agency will consider granting generic petitions provided that representative data are submitted to support a variance for each facility covered by the petition.

Petitioners should submit at least one copy to:

The Administrator
U.S. Environmental Protection Agency
401 M Street, S.W.
Washington, DC 20460

An additional copy marked "Treatability Variance" should be submitted to:

Chief, Waste Treatment Branch
Office of Solid Waste (WH-565)
U.S. Environmental Protection Agency
401 M Street, S.W.
Washington, DC 20460

Petitions containing confidential information should be sent with only the inner envelope marked "Treatability Variance" and "Confidential Business Information" and with the contents marked in accordance with the requirements of 40 CFR Part 2 (41 FR 36902, September 1, 1976, amended by 43 FR 4000).

The petition should contain the following information:

(1) The petitioner's name and address.

(2) A statement of the petitioner's interest in the proposed action.

(3) The name, address, and EPA identification number of the facility generating the waste, and the name and telephone number of the plant contact.

(4) The process(es) and feed materials generating the waste and an assessment of whether such process(es) or feed materials may produce a waste that is not covered by the demonstration.

(5) A description of the waste sufficient for comparison with the waste considered by the Agency in developing BDAT, and an estimate of the average and maximum monthly and annual quantities of waste covered by the demonstration. (Note: The petitioner should consult the appropriate BDAT background document for determining the characteristics of the wastes considered in developing treatment standards.)

(6) If the waste has been treated, a description of the system used for treating the waste, including the process design and operating conditions. The petition should include the reasons the treatment standards are not achievable and/or why the petitioner believes the standards are based on inappropriate technology for treating the waste. (Note: The petitioner should refer to the BDAT background document as guidance for determining the design and operating parameters that the Agency used in developing treatment standards.)

(7) A description of the alternative treatment systems examined by the petitioner (if any); a description of the treatment system deemed appropriate by the petitioner for the waste in question; and, as appropriate, the concentrations in the treatment residual or extract of the treatment residual (i.e., using the TCLP where appropriate for stabilized metals) that can be achieved by applying such treatment to the waste.

(8) A description of those parameters affecting treatment selection and waste characteristics that affect performance, including results of all analyses. (See Section 3.0 for a discussion of waste characteristics affecting performance that the Agency has identified for the technology representing BDAT.)

(9) The dates of the sampling and testing.

(10) A description of the methodologies and equipment used to obtain representative samples.

(11) A description of the sample handling and preparation techniques, including techniques used for extraction, containerization, and preservation of the samples.

(12) A description of analytical procedures used including QA/QC methods.

After receiving a petition for a variance, the Administrator may request any additional information or waste samples that may be required to evaluate and process the petition. Additionally, all petitioners must certify that the information provided to the Agency is accurate under 40 CFR Part 268.4(b).

In determining whether a variance will be granted, the Agency will first look at the design and operation of the treatment system being used. If EPA determines that the technology and operation are consistent with BDAT, the Agency will evaluate the waste to determine if the waste matrix and/or physical parameters are such that the BDAT treatment standards reflect treatment of this waste. Essentially, this latter analysis will concern the parameters affecting treatment selection and waste characteristics affecting performance parameters.

In cases where BDAT is based on more than one technology, the petitioner will need to demonstrate that the treatment standard cannot be met using any of the technologies, or that none of the technologies are appropriate for treatment of the waste. After the Agency has made a determination on the petition, the Agency's findings will be published in the Federal Register, followed by a 30-day period for public comment.

After review of the public comments, EPA will publish its final determination in the Federal Register as an amendment to the treatment standards in 40 CFR Part 268, Subpart D.

2. INDUSTRIES AFFECTED AND WASTE CHARACTERIZATION

This section presents a description of the industries affected by land disposal restrictions for this waste, the process generating the waste, and a summary of available waste characterization data for the waste. As discussed in Section 1, those wastes listed in 40 CFR Section 261.32 are subject to the land disposal restriction provisions of HSWA. Within that industry-specific listing of hazardous wastes are the following three wastes generated by the chlorine industry:

K071: Brine purification muds from the mercury cell process in chlorine production, where separately prepurified brine is not used.

K073: Chlorinated hydrocarbon waste from the purification step of the diaphragm cell process using graphite anodes in chlorine production.

K106: Wastewater treatment sludge from the mercury cell process in chlorine production.

The Agency has determined that the listed waste K071 represents a separate waste treatability group based on the physical and chemical characteristics of the waste (see Section 1 for a discussion of waste treatability groups). As a result, EPA has examined for this waste alone the source of the waste, applicable technologies, and treatment performance attainable.

The listed waste K106 represents a separate waste treatability group and will be discussed in a separate background document. The listed waste K073 is no longer generated in chlorine production.

2.1 Industries Affected and Process Description

Chlorine is produced primarily from the electrolytic decomposition of either sodium chloride or potassium chloride, from which the coproducts are sodium hydroxide (caustic soda) or potassium hydroxide. All of the caustic soda and potassium hydroxide and over 90 percent of the chlorine produced in the U.S. are made by the electrolytic decomposition of sodium chloride or potassium chloride. Chlorine is also produced from the nonelectrolytic oxidation of hydrochloric acid (HCl), from the production of sodium metal, and from the electrolytic production of magnesium metal from molten magnesium chloride.

Three types of electrolytic cells are in commercial use for the production of alkalies and chlorine: the mercury cell, the diaphragm cell, and the membrane cell. The listed waste K071 is generated in chlorine production by the mercury cell process. The Agency estimates that there are 20 facilities that produce chlorine by the mercury cell process and may generate K071 waste. The locations of these facilities are provided in Table 2-1, listed by State, and in Table 2-2, listed by EPA Region. Chlorine producers fall under SIC Code 2812, Alkalies and Chlorine. Six of these facilities are believed to use prepurified salt in the brine makeup step; therefore, while they do not generate K071 waste now, they may do so in the future. The number of these facilities, by State and by EPA Region, are identified in the tables by the numbers in parentheses.

Table 2-1 Number of Producers of Chlorine Using the Mercury Cell Process Listed by State

State	Number of producers[a]
Alabama (IV)	3
Delaware (III)	1
Georgia (IV)	1 (1)
Kentucky (IV)	1
Louisiana (VI)	1 (1)
Maine (I)	1
New York (II)	1 (1)
North Carolina (IV)	1
Ohio (V)	1
Tennessee (IV)	1
Texas (VI)	0 (1)
Washington (X)	1
West Virginia (III)	0 (2)
Wisconsin (V)	1
Total	14(6)

[a] Numbers in parentheses are numbers of additional facilities that use prepurified salt in the process, and therefore do not currently generate K071 waste.

Reference: SRI 1987.

Table 2-2 Number of Producers of Chlorine Using the Mercury Cell Process Listed by EPA Region

EPA Region	Number of producers[a]
I	1
II	1 (1)
III	1 (2)
IV	7 (1)
V	2
VI	1 (2)
X	1
Total	14 (6)

[a] Numbers in parentheses are numbers of additional facilities that use prepurified salt in the process and therefore do not currently generate K071 waste.

Reference: SRI 1987.

In chlorine production by the mercury cell process, a saturated salt brine solution is prepared by dissolving sodium chloride, usually in the form of rock salt, in the depleted brine solution recycled from the mercury cells. Brine purification removes impurities present in the raw salt dissolved in the brine saturation step. In brine purification, hydroxide and carbonate are added to remove calcium, magnesium, and iron impurities by precipitation. In a separate treatment step, calcium chloride is sometimes used to remove sulfate, also by precipitation. After clarification and filtration, the purified saturated brine is fed to the mercury cells, where electrolytic decomposition into sodium and chlorine occurs. The solids removed in the clarifier and by the brine filters are brine purification muds (a K071 nonwastewater).

A second source of K071 waste (nonwastewater) from this process is insoluble materials present in the salt used in the brine saturation step. These solids settle at the bottom of the brine saturator tank and must be removed periodically. Solids removed from the saturator are also brine purification muds, but are more commonly referred to as saturator insolubles. This waste is significantly different in particle size, water content, and mercury content from the brine purification muds generated in the brine purification clarifier, and thus requires the use of a different treatment system for acid leaching treatment.

2.2 Waste Characterization

This section includes all waste characterization data available to the Agency for K071 waste. The major constituents that comprise the two waste forms of brine purification muds and their approximate concentrations are presented in Tables 2-3 and 2-4. The ranges of concentration of BDAT constituents detected in the wastes are presented in Table 2-5. Appendix D presents other EPA data on K071 waste that in the Agency's judgment represent the characterization of waste that has been mixed with another listed waste and/or has undergone some treatment before land disposal.

Table 2-3 Major Constituent Analysis of Untreated Brine Purification Muds

Major constituent	Concentration (wt. %)				
	(1)	(2)	(2)	(2)	(3)[a]
Brine purification muds					
Calcium	-	17	-	-	-
Calcium carbonate	7.4	-	19.2-24.8	20	30-40
Calcium sulfate	9.5	-	-	-	50-60
Chloride	-	9.4	-	-	-
Graphite	-	-	1.1-5.5	-	-
Iron and aluminum hydroxides	<0.1	-	1.1-3.3	0.3	-
Iron	-	2800 ppm	-	-	-
Magnesium	-	1700 ppm	-	-	-
Magnesium carbonate	0.3	-	11-16.5	-	-
Magnesium hydroxide	<0.1	-	-	3.0	-
Sodium chloride	19.0	-	5.5-11	-	5-15
Sodium hydroxide	0.1	-	-	-	-
Sodium sulfate	0.2	-	-	-	-
Sulfate	-	3.2	-	-	-
Other solids	-	-	-	30	-
Water	63.4	41	45	46.7	-
BDAT metals	<0.1	<0.1			

[a] Reported on a dry basis.

References:

(1) USEPA 1988a. Section 1.2.
(2) USEPA 1986.
(3) Bennett 1986.

Table 2-4 Major Constituent Analysis of Untreated Saturator Insolubles

Major constituent	Concentration (wt. %) (1)
Saturator insolubles	
Calcium carbonate	8.0
Calcium chloride	2.0
Calcium sulfate	1.8
Magnesium carbonate	1.2
Sodium chloride	67.1
Other solids	17.8
Water	2.1

References:

(1) USEPA 1988a. Section 1.2

Table 2-5 BDAT Constituent Composition of Untreated K071 Waste

Data source		(1)[a]	(1)[b]	(2)[a]	(2)[a]	(3)[a]	(3)[b]
Volatile Organic Compounds							
Bromodichloromethane	ug/l	62	<25	-	-	-	-
Bromoform (tribromomethane)	ug/l	550	<25	-	-	-	-
Chlorodibromomethane	ug/l	170	<25	-	-	-	-
Chloroform	ug/l	200	<25	-	-	-	-
Metals:							
Antimony	mg/l	ND	ND	10.0	-	-	-
Arsenic	mg/l	ND	ND	-	-	-	-
Barium	mg/l	0.57-1.1	1.4	-	-	-	-
Beryllium	mg/l	ND	ND	-	-	-	-
Cadmium	mg/l	ND	ND	3.8	-	-	-
Chromium	mg/l	ND	ND	5.9	-	-	-
Copper	mg/l	ND	ND	184.7	-	-	-
Lead	mg/l	ND	ND	47.8	-	-	-
Mercury	mg/l	17.0-22.1	1.12	73.8	-	14	2.2
Nickel	mg/l	3.15-<6.5	7.9	90.3	-	-	-
Selenium	mg/l	ND	ND	-	-	-	-
Silver	mg/l	ND	ND	-	-	-	-
Thallium	mg/l	7.74-<43	ND	-	-	-	-
Vanadium	mg/l	ND	ND	-	-	-	-
Zinc	mg/l	2.29-3.18	2.5	128.0	-	-	-

[a] Data specified for brine purification muds.
[b] Data specified for saturator insolubles.

- = Not analyzed.
ND = Not detected

References:

(1) USEPA 1988a. Tables 5-2 through 5-8, 5-12, and 5-14.
(2) USEPA 1986.
(3) Bennett 1986.

3. APPLICABLE/DEMONSTRATED TREATMENT TECHNOLOGIES

This section describes the applicable treatment technologies and performance data for treatment of K071 waste. The technologies that are considered to be applicable to the treatment of K071 waste are those that treat toxic metals (especially mercury, the constituent for which the waste was listed) by reducing their concentration and/or their leachability in the waste. Included in this section are discussions of those applicable treatment technologies that have been demonstrated on a commercial basis. The treatment technologies tested by the Agency and the performance data obtained from the tests are also presented.

In the previous section, a discussion of the industry generating K071 waste and a major constituent analysis of K071 were presented.

3.1 Applicable Treatment Technologies

The Agency has identified the following treatment technologies, either alone or in combination, as being applicable for treatment of K071 waste: (1) acid leaching, chemical oxidation, sludge dewatering combined with either acid or water washing, stabilization, and retorting for nonwastewaters, and (2) sulfide precipitation and filtration for the wastewaters produced in the dewatering treatment step.

The Agency has identified treatment technologies that may be applicable to K071 because the technologies are designed to treat toxic metal constituents in high water content matrices with significant filterable solids. The technologies applicable to K071 are those that reduce the concentration of BDAT list metals in the treated residual

and/or reduce the leachability of BDAT list metals in the treated residual from the total and/or leachate concentrations of BDAT list metals in the untreated waste. The selection of treatment technologies applicable for treating BDAT list metals in K071 waste is based on information obtained from literature sources, information obtained from engineering site visits, and information submitted by industry.

3.2 Demonstrated Treatment Technologies

i. Nonwastewater

The demonstrated technologies that the Agency has identified for treatment of K071 nonwastewater are: (1) acid leaching followed by chemical oxidation followed by dewatering/acid washing, (2) dewatering/water washing, and (3) stabilization. Stabilization has not been demonstrated on K071 waste, but has been demonstrated for treatment of wastes containing similar concentrations of BDAT list metals and water. Retorting has not been demonstrated on a waste containing free liquids and low ppm levels of mercury; however, it has been demonstrated for wastes containing greater than approximately one percent mercury and no free liquids.

ii. Wastewater

The only demonstrated treatment train that the Agency has identified for treatment of K071 wastewaters is chemical precipitation followed by filtration.

The demonstrated technologies for both nonwastewater and wastewater are described in this section, and performance data are presented that indicate the relative effectiveness of these technologies in treating the BDAT list constituents found in K071 waste.

3.2.1 Acid Leaching Treatment System

The acid leaching, chemical oxidation, and dewatering/acid washing treatment system used for treatment of K071 nonwastewaters involves several individual process steps. This treatment is used to remove mercury from the waste as soluble mercuric chloride, generating a solid residual with reduced concentrations of hazardous metal constituents and a wastewater containing the metals removed by acid leaching that requires further treatment. A schematic diagram of this treatment system is provided in Figure 3-1. In the acidification step, sulfuric acid is added to the waste to reduce the pH and solubilize mercury present in the waste as mercuric oxide (HgO), by reacting it to form soluble mercuric chloride, $HgCl_2$. In a simultaneous reaction, the calcium in the waste is precipitated as calcium sulfate, $CaSO_4$. In the next process step, chemical oxidation, any elemental mercury present in the waste is solubilized by reaction with sodium hypochlorite, NaOCl, to form $HgCl_2$. After chemical oxidation, the waste is fed to a vacuum rotary drum filter equipped with one hydrochloric acid and two water wash sprays, where the solids are washed and dewatered. The filtrate is a K071 wastewater.

The acid leaching treatment train described above removes acid-soluble metals from the solid portion of the nonwastewater and produces a wastewater containing the metals removed. Sulfide precipitation and filtration treatment of the wastewater concentrates the metals in a sulfide residual (K106) in which the leachability of the metals is reduced.

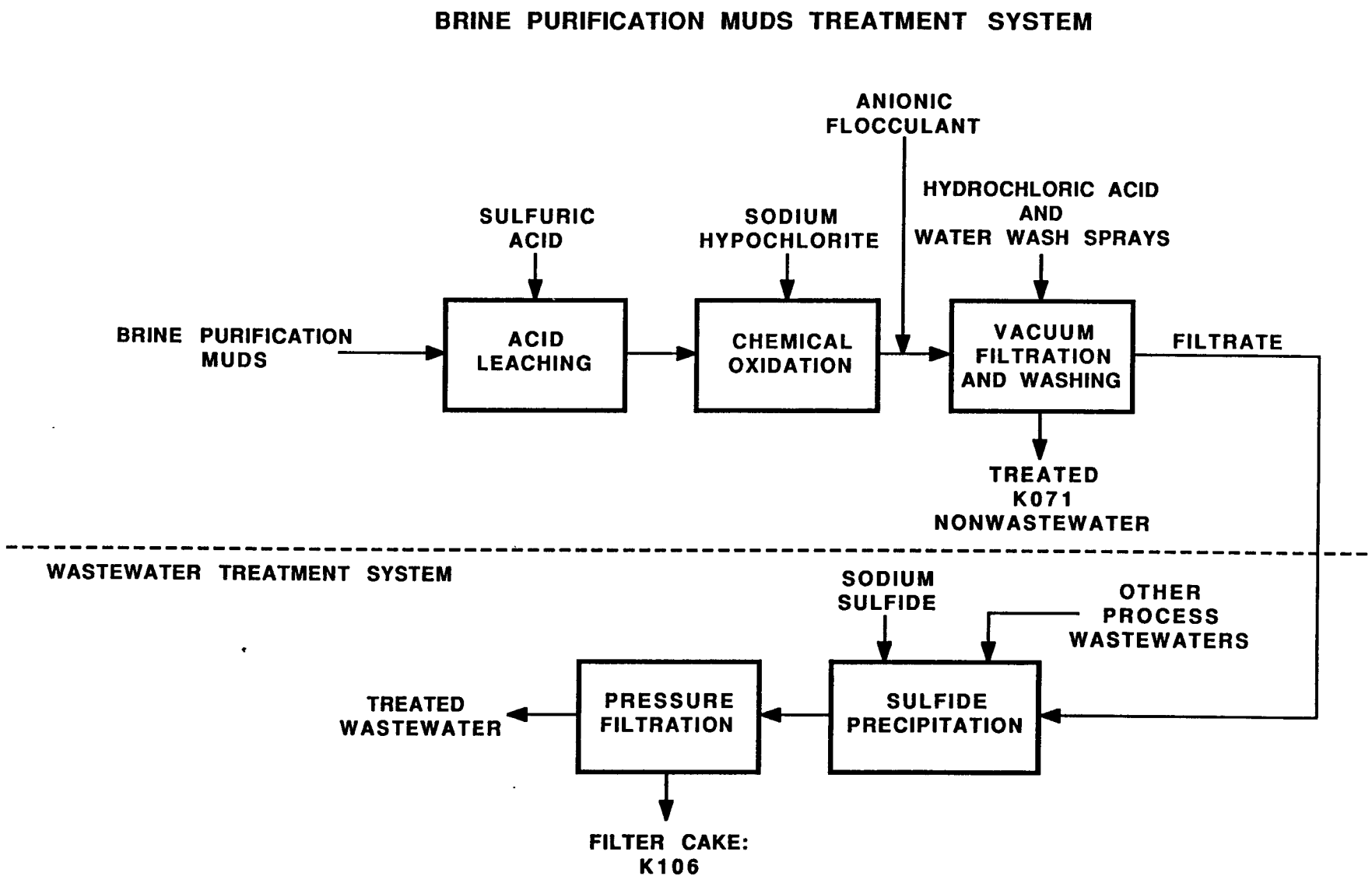

FIGURE 3-1 SCHEMATIC OF K071 WASTE TREATMENT PROCESS

This overall process results in the formation of a treated solid residual from the rotary drum sludge dewatering step and both a treated wastewater and a solid residual from the sulfide precipitation/filtration step. The treated residual from the rotary drum sludge dewatering step was analyzed to determine the performance of the acid leaching treatment technology. The treated wastewater from the sulfide precipitation/ filtration step was analyzed to determine the performance of the sulfide precipitation technology. The solid residual from the second filtration step is the listed waste K106.

The second demonstrated technology, dewatering/water washing, used alone to treat K071, removes most hazardous constituents present in the liquid portion of the nonwastewater by separating these liquids from the solid portion of the nonwastewater. The liquids removed are a K071 wastewater.

The third demonstrated technology, stabilization of metals, reduces the leachability of metals in the K071 nonwastewater.

The following demonstrated technologies or treatment steps are discussed in detail below: acid leaching, sludge filtration (dewatering), stabilization of metals, and chemical precipitation.

3.2.1.1 Acid Leaching

Acid leaching is a process that removes a soluble constituent or constituents from a relatively insoluble solid phase by contacting the solids with an acidic solution. The spent acid will concentrate the leached constituent or constituents, and will then be subject to further

treatment. A treatment system for acid leaching usually consists of some type of solid/liquid contacting system followed by equipment for solid/liquid separation.

(1) Applicability and Use of Acid Leaching

Acid leaching can be applied to treatment of wastes in solid or slurry form when the hazardous constituents of the waste are soluble in a strong acid solution or can be converted by reaction with a strong acid to a soluble form. It frequently is used to remove metals from sludges.

(2) Underlying Principles of Operation

The underlying principle of operation for acid leaching is that by lowering the pH of the waste, metals can be concentrated in a solution passing through the waste because of the higher solubility associated with acidic pH values.

In order to assure effective removal of metals, strong acids, such as sulfuric (H_2SO_4), hydrochloric (HCl), nitric (HNO_3), and hydrofluoric (HF), frequently are used. Separation of the liquids from the treated solids can be accomplished either by designing solid/liquid contacting equipment used in the leaching step to retain solids and release liquids, or by additional separation steps such as filtration.

(3) Physical Description of the Process

Acid leaching processes can be categorized into two major types:
(a) treatment by percolation of the acid through the solids, and
(b) treatment by dispersion of the solids in the acid and then subsequent separation of the solids from the liquid.

(a) Percolation processes. Percolation is carried out in batch tanks and in several designs of continuous percolation equipment. Batch percolators are large tanks. The solids are placed in the tank and the acid is fed onto the solids. The acid percolates through the solid and drains out through screens or porous media in the tank bottom. The acid may flow countercurrently through a series of tanks, with fresh acid being added to the tank containing the most nearly exhausted solids. Following treatment, the solids are removed.

Continuous percolation is carried out in moving-bed equipment, where the acid normally flows countercurrently to the solids (see Figure 3-2). The acid drains from each solids bed to the solids bed beneath.

(b) Dispersed-solids processes. Leaching by dispersion of fine solids into the acid is performed in batch tanks or in a variety of continuous devices. In the batch and continuous system, the untreated waste and the acid are mixed in the reaction tank. Following mixing, the treated solids are separated from the acid; separation can be accomplished either by settling or filtration, depending on the type and concentration of solids involved. In both systems, sufficient acid must be supplied to keep the pH at a level necessary to effectively leach the metals from the waste.

(4) Waste Characteristics Affecting Performance

In determining whether an untested waste can be treated to the same level of performance as a previously tested waste, the waste characteristics EPA will examine for the acid leaching process are:

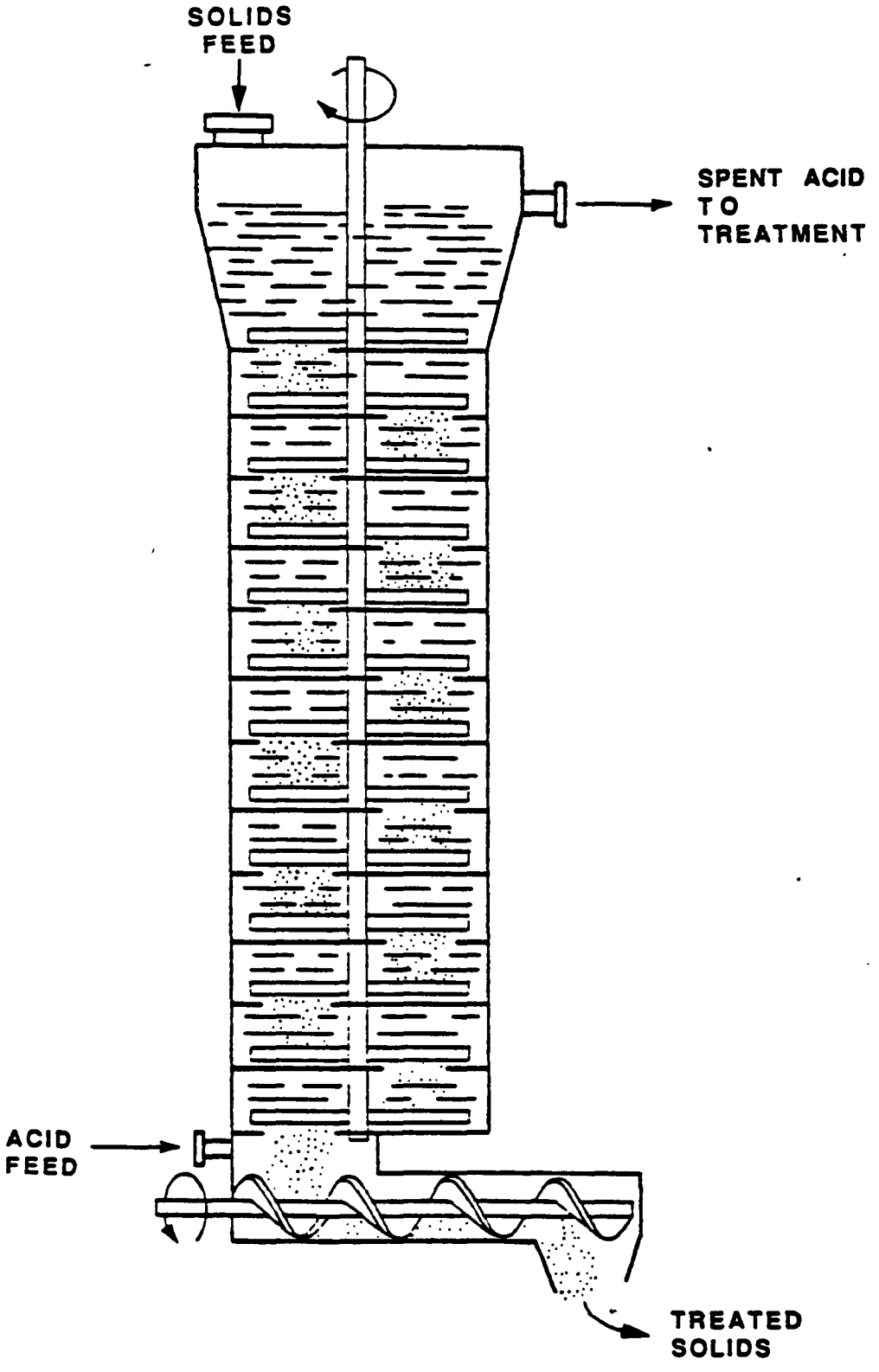

FIGURE 3-2
CONTINUOUS EXTRACTOR

(a) the solid particle size, (b) the neutralizing capacity (or alkalinity) of the solids being treated, and (c) the type and chemical form of the hazardous metal constituent(s) in the waste.

(a) Particle size. The reaction rate of the acid with the hazardous constituent(s) of the waste, and the rate of transport of acid to and from the site of the hazardous constituent, are both affected by the size of the solid particles. The smaller the particles, the more rapidly they will leach because of the increased surface area that is exposed to acid.

(b) Neutralizing capacity. The neutralizing capacity, or alkalinity, of the solid affects the amount of acid that must be added to the waste in order to achieve and/or maintain the desired reactor pH. In addition to dissolving the waste contaminants, the acid also will dissolve some of the alkali bulk solids. Therefore, highly alkaline wastes require more acid or a stronger acid in order to maintain the pH during treatment.

(c) Type and chemical form of hazardous metal constituent(s). The type of metal(s) present will affect the degree to which acid leaching will be effective. Different metals will have different solubilities and thus impact the removal that can be achieved.

The chemical form of each of the hazardous metal constituents is also important in determining the reactivity and/or solubility of the constituent. For example, mercury may exist in waste as mercuric oxide (HgO) or metallic mercury (Hg). Reaction with a strong acid and a source of chloride will transform the less soluble HgO into the more soluble

mercuric chloride form ($HgO + 2HCl \rightarrow HgCl_2 + H_2O$). This will allow removal of mercury present as HgO. Conversely, metallic mercury (Hg) will not react with acid to form $HgCl_2$ and will not leach.

(5) Design and Operating Parameters

The design and operating parameters of an acid leaching system that affect performance are: (a) contact time between the solid and the acid, (b) choice of acid used, (c) pH, and (d) type of contactor used.

(a) Contact time. In continuous percolation systems, contact time is usually specified by the design volume of the equipment or the speed of the moving bed. For a given contact time, the performance of either a continuous or a batch percolation system can be increased by using a countercurrent flow of acid. In all acid leaching systems, the extent of reaction and dissolution of the contaminant are directly related to the contact time.

(b) Choice and concentration of acid used. If the hazardous constituents to be removed in the acid leaching system are already present in the waste in a soluble form, or are solubilized by pH reduction, then any acid that will reduce the pH to the desired value may be used. However, if chemical reaction is necessary to form the soluble species, then the appropriate acid must be used at the proper concentration. If selection of the acid will have an effect on the nonhazardous constituents of the waste (i.e., the acid may precipitate an alkali metal salt such as calcium sulfate), then an acid that produces a waste that can be more effectively separated by a solid/liquid separation device (such as a filter or a centrifuge) should be used.

(c) pH. For dispersed-solids systems, the feed of acid to the treatment reactor should be based on pH monitoring and control, since the reaction rate is likely to be highly pH dependent. Because reaction rate in acid leaching depends on pH, a pH should be selected, based on the contact time and amount of the hazardous constituent(s) in the waste as determined by laboratory testing, that provides for complete reaction in the contact time provided. Also, the effect that the pH may have on the composition or characteristics of the nonhazardous constituents of the waste should be considered. For example, if maintenance of a certain pH value leads to formation of solids that will allow the most efficient solid/liquid separation after leaching is completed, then pH should be maintained at this value.

For percolation systems, pH monitoring of the acid percolating through the tank bottom should ensure that enough acid is being added. If the pH is not low enough, additional acid may be added.

(d) Type of contactor used. The performance of an acid leaching systems depends on the type of contacting system used. Additionally, acid leaching processes are affected by the number of contacting stages and the type of flow pattern of the acid (countercurrent or cocurrent).

3.2.1.2 Sludge Filtration

(1) Applicability

Sludge filtration, also known as sludge dewatering or cake-formation filtration, is a technology used on wastes that contain high concentrations of suspended solids, generally higher than 1 percent.

The remainder of the waste is essentially water. Sludge filtration is applied to sludges, typically those that have settled to the bottom of clarifiers, for dewatering. After filtration, these sludges can be dewatered to 20 to 50 percent solids.

(2) Underlying Principles of Operation

The basic principle of filtration is the separation of particles from a mixture of fluids and particles by a medium that permits the flow of the fluid but retains the particles. As would be expected, larger particles are easier to separate from the fluid than smaller particles. Extremely small particles, in the colloidal range, may not be filtered effectively and may appear in the treated waste. To mitigate this problem, the wastewater should be treated prior to filtration to modify the particle size distribution in favor of the larger particles, by the use of appropriate precipitants, coagulants, flocculants, and filter aids. The selection of the appropriate precipitant or coagulant is important because it affects the particles formed. For example, lime neutralization usually produces larger, less gelatinous particles than does caustic soda precipitation. For larger particles that become too small to filter effectively because of poor resistance to shearing, shear resistance can be improved by the use of coagulants and flocculants. Also, if pumps are used to feed the filter, shear can be minimized by designing for a lower pump speed or by use of a low shear type of pump.

(3) Physical Description of the Process

For sludge filtration, settled sludge is either pumped through a cloth-type filter media (such as in a plate and frame filter that allows

solid "cake" to build up on the media) or the sludge is drawn by vacuum through the cloth media (such as on a drum or vacuum filter, which also allows the solids to build). In both cases, the solids themselves act as a filter for subsequent solids removal. For a plate and frame type filter, removal of the solids is accomplished by taking the unit off line, opening the filter, and scraping the solids off. For the vacuum type filter, cake is removed continuously. For a specific sludge, the plate and frame type filter will usually produce a drier cake than a vacuum filter. Other types of sludge filters, such as belt filters, are also used for effective sludge dewatering.

(4) Waste Characteristics Affecting Performance

The following characteristics of the waste will affect performance of a sludge filtration unit: (a) size of particles and (b) type of particles.

(a) Size of particles. The smaller the particle size, the more the particles tend to go through the filter media. This is especially true for a vacuum filter. For a pressure filter (like a plate and frame), smaller particles may require higher pressures for equivalent throughput, since the smaller pore spaces between particles create resistance to flow.

(b) Type of particles. Some solids formed during metal precipitation are gelatinous in nature and cannot be dewatered well by cake-formation filtration. In fact, for vacuum filtration a cake may not form at all. In most cases, solids can be made less gelatinous by use of the appropriate coagulants and coagulant dosage prior to clarification,

or after clarification but prior to filtration. In addition, the use of lime instead of caustic soda in metal precipitation will reduce the formation of gelatinous solids. Also, the addition of filter aids, such as lime or diatomaceous earth, to a gelatinous sludge will help significantly. Finally, precoating the filter with diatomaceous earth prior to sludge filtration will assist in dewatering gelatinous sludges.

(5) Design and Operating Parameters

For sludge filtration, the following design and operating variables affect performance: (a) type of filter selected, (b) size of filter selected, (c) feed pressure, and (d) use of coagulants or filter aids.

(a) Type of filter. Typically, pressure type filters (such as a plate and frame) will yield a drier cake than a vacuum type filter and will also be more tolerant of variations in influent sludge characteristics. Pressure type filters, however, are batch operations, so that when cake is built up to the maximum depth physically possible (constrained by filter geometry), or to the maximum design pressure, the filter is turned off while the cake is removed. A vacuum filter is a continuous device (i.e., cake discharges continuously), but will usually be much larger than a pressure filter with the same capacity. A hybrid device is a belt filter, which mechanically squeezes sludge between two continuous fabric belts.

(b) Size of filter. As with in-depth filters, the larger the filter, the greater its hydraulic capacity and the longer the filter runs between cake discharge.

(c) Feed pressure. This parameter impacts both the design pore size of the filter and the design flow rate. It is important that in treating waste that the design feed pressure not be exceeded, otherwise particles may be forced through the filter medium, resulting in ineffective treatment.

(d) Use of coagulants. Coagulants and filter aids may be mixed with filter feed prior to filtration. Their effect is particularly significant for vacuum filtration in that it may make the difference in a vacuum filter between no cake and a relatively dry cake. In a pressure filter, coagulants and filter aids will also significantly improve hydraulic capacity and cake dryness. Filter aids, such as diatomaceous earth, can be precoated on filters (vacuum or pressure) for sludges that are particularly difficult to filter. The precoat layer acts somewhat like an in-depth filter in that sludge solids are trapped in the precoat pore spaces. Use of precoats and most coagulants or filter aids significantly increases the amount of sludge solids to be disposed of. However, polyelectrolyte coagulant usage usually does not increase sludge volume significantly because the dosage is low.

3.2.2 Stabilization of Metals

Stabilization refers to a broad class of treatment processes that chemically reduce the mobility of hazardous constituents in a waste. Solidification and fixation are other terms that are sometimes used synonymously for stabilization or to describe specific variations within the broader class of stabilization. Related technologies are

encapsulation and thermoplastic binding; however, EPA considers these technologies to be distinct from stabilization in that the operational principles are significantly different.

(1) Applicability and Use of Stabilization

Stabilization is used when a waste contains metals that will leach from the waste when it is contacted by water. In general, this technology is applicable to wastes containing BDAT list metals having a high filterable solids content, low TOC content, and low oil and grease content. This technology is commonly used to treat residuals generated from treatment of electroplating wastewaters. For some wastes, an alternative to stabilization is metal recovery.

(2) Underlying Principles of Operation

The basic principle underlying this technology is that stabilizing agents and other chemicals are added to a waste in order to minimize the amount of metal that leaches. The reduced leachability is accomplished by the formation of a lattice structure and/or chemical bonds that bind the metals to the solid matrix and thereby limit the amount of metal constituents that can be leached when water or a mild acid solution comes into contact with the waste material.

There are two principal stabilization processes used; these are cement based and lime based. A brief discussion of each is provided below. In both cement-based or lime/pozzolan-based techniques, the stabilizing process can be modified through the use of additives, such as

silicates, that control curing rates or enhance the properties of the solid material.

(a) Portland cement-based process. Portland cement is a mixture of powdered oxides of calcium, silica, aluminum, and iron, produced by kiln burning of materials rich in calcium and silica at high temperatures (i.e., 1400°C to 1500°C). When the anhydrous cement powder is mixed with water, hydration occurs and the cement begins to set. The chemistry involved is complex because many different reactions occur depending on the composition of the cement mixture.

As the cement begins to set, a colloidal gel of indefinite composition and structure is formed. Over a period of time, the gel swells and forms a matrix composed of interlacing, thin, densely-packed silicate fibrils. Constituents present in the waste slurry (e.g., hydroxides and carbonates of various heavy metals) are incorporated into the interstices of the cement matrix. The high pH of the cement mixture tends to keep metals in the form of insoluble hydroxide and carbonate salts. It has been hypothesized that metal ions may also be incorporated into the crystal structure of the cement matrix, but this hypothesis has not been verified.

(b) Lime/pozzolan-based process. Pozzolan, which contains finely divided, noncrystalline silica (e.g., fly ash or components of cement kiln dust), is a material that is not cementitious in itself, but becomes so upon the addition of lime. Metals in the waste are converted to

silicates or hydroxides, which inhibit leaching. Additives, again, can be used to reduce permeability and thereby further decrease leaching potential.

(3) Description of Stabilization Processes

In most stabilization processes, the waste, stabilizing agent, and other additives, if used, are mixed and then pumped to a curing vessel or area and allowed to cure. The actual operation (equipment requirements and process sequencing) will depend on several factors such as the nature of the waste, the quantity of the waste, the location of the waste in relation to the disposal site, the particular stabilization formulation to be used, and the curing rate. After curing, the solid formed is recovered from the processing equipment and shipped for final disposal.

In instances where waste contained in a lagoon is to be treated, the material should be first transferred to mixing vessels where stabilizing agents are added. The mixed material is then fed to a curing pad or vessel. After curing, the solid formed is removed for disposal. Equipment commonly used also includes facilities to store waste and chemical additives. Pumps can be used to transfer liquid or light sludge wastes to the mixing pits and pumpable uncured wastes to the curing site. Stabilized wastes are then removed to a final disposal site.

Commercial concrete mixing and handling equipment generally can be used with wastes. Weighing conveyors, metering cement hoppers, and mixers similar to concrete batching plants have been adapted in some

operations. Where extremely dangerous materials are being treated, remote-control and in-drum mixing equipment, such as that used with nuclear waste, can be employed.

(4) Waste Characteristics Affecting Performance

In determining whether stabilization is likely to achieve the same level of performance on an untested waste as on a previously tested waste, the Agency will focus on the characteristics that inhibit the formation of either the chemical bonds or the lattice structure. The four characteristics EPA has identified as affecting treatment performance are the presence of (a) fine particulates, (b) oil and grease, (c) organic compounds, and (d) certain inorganic compounds.

(a) Fine particulates. For both cement-based and lime/pozzolan-based processes, the literature states that very fine solid materials (i.e., those that pass through a No. 200 mesh sieve, 74 um particle size) can weaken the bonding between waste particles and cement by coating the particles. This coating can inhibit chemical bond formation and decreases the resistance of the material to leaching.

(b) Oil and grease. The presence of oil and grease in both cement-based and lime/pozzolan-based systems results in the coating of waste particles and the weakening of the bonding between the particle and the stabilizing agent. This coating can inhibit chemical bond formation and thereby decrease the resistance of the material to leaching.

(c) Organic compounds. The presence of organic compounds in the waste interferes with the chemical reactions and bond formation that occur during the curing of the stabilized material. This results in a stabilized waste having decreased resistance to leaching.

(d) Sulfates and chlorides. The presence of certain inorganic compounds will interfere with the chemical reactions, weakening bond strength and prolonging setting and curing time. Sulfate and chloride compounds may reduce the dimensional stability of the cured matrix, thereby increasing leachability potential.

Accordingly, EPA will examine these constituents when making decisions regarding transfer of treatment standards based on stabilization.

(5) Design and Operating Parameters

In designing a stabilization system, the principal parameters that are important to optimize so that the amount of leachable metal constituents is minimized are (a) selection of stabilizing agents and other additives, (b) ratio of waste to stabilizing agents and other additives, (c) degree of mixing, and (d) curing conditions.

(a) Selection of stabilizing agents and other additives. The stabilizing agent and additives used will determine the chemistry and structure of the stabilized material and, therefore, will affect the leachability of the solid material. Stabilizing agents and additives must be carefully selected based on the chemical and physical

characteristics of the waste to be stabilized. For example, the amount of sulfates in a waste must be considered when a choice is being made between a lime/pozzolan and a Portland cement-based system.

In order to select the type of stabilizing agents and additives, the waste should be tested in the laboratory with a variety of materials to determine the best combination.

(b) Amount of stabilizing agents and additives. The amount of stabilizing agents and additives is a critical parameter in that sufficient stabilizing materials are necessary in the mixture to bind the waste constituents of concern properly, thereby making them less susceptible to leaching. The appropriate weight ratios of waste to stabilizing agent and other additives are established empirically by setting up a series of laboratory tests that allow separate leachate testing of different mix ratios. The ratio of water to stabilizing agent (including water in waste) will also impact the strength and leaching characteristics of the stabilized material. Too much water will cause low strength; too little will make mixing difficult and, more important, may not allow the chemical reactions that bind the hazardous constituents to be fully completed.

(c) Mixing. The conditions of mixing include the type and duration of mixing. Mixing is necessary to ensure homogeneous distribution of the waste and the stabilizing agents. Both undermixing and overmixing are undesirable. The first condition results in a nonhomogeneous mixture;

therefore, areas will exist within the waste where waste particles are neither chemically bonded to the stabilizing agent nor physically held within the lattice structure. Overmixing, on the other hand, may inhibit gel formation and ion adsorption in some stabilization systems. As with the relative amounts of waste, stabilizing agent, and additives within the system, optimal mixing conditions generally are determined through laboratory tests. During treatment it is important to monitor the degree (i.e., type and duration) of mixing to ensure that it reflects design conditions.

(d) Curing conditions. The curing conditions include the duration of curing and the ambient curing conditions (temperature and humidity). The duration of curing is a critical parameter to ensure that the waste particles have had sufficient time in which to form stable chemical bonds and/or lattice structures. The time necessary for complete stabilization depends upon the waste type and the stabilization used. The performance of the stabilized waste (i.e., the levels of constituents in the leachate) will be highly dependent upon whether complete stabilization has occurred. Higher temperatures and lower humidity increase the rate of curing by increasing the rate of evaporation of water from the solidification mixtures. However, if temperatures are too high, the evaporation rate can be excessive and could result in too little water being available for completion of the stabilization reaction. The duration of the curing process should also be determined during the design stage and typically will be between 7 and 28 days.

3.2.3 Chemical Precipitation Treatment System

The K071 wastewater, containing the dissolved mercury as $HgCl_2$, is treated by sulfide precipitation and filtration to remove the mercury as the sulfide, HgS, in the wastewater treatment sludge. The wastewater treatment sludge is the listed waste K106.

3.2.3.1 Chemical Precipitation

(1) Applicability and Use of Chemical Precipitation

Chemical precipitation is used when dissolved metals are to be removed from solution. This technology can be applied to a wide range of wastewaters containing dissolved BDAT list metals and other metals as well. This treatment process has been practiced widely by industrial facilities since the 1940s.

(2) Underlying Principles of Operation

The underlying principle of chemical precipitation is that metals in wastewater are removed by the addition of a treatment chemical that converts the dissolved metal to a metal precipitate. This precipitate is less soluble than the original metal compound, and therefore settles out of solution, leaving a lower concentration of the metal present in the solution. The principal chemicals used to convert soluble metal compounds to the less soluble forms include lime ($Ca(OH)_2$), caustic (NaOH), sodium sulfide (Na_2S), and, to a lesser extent, soda ash (Na_2CO_3), phosphate, and ferrous sulfide (FeS).

The solubility of a particular compound will depend on the extent to which the electrostatic forces holding the ions of the compound together

can be overcome. The solubility will change significantly with temperature; most metal compounds are more soluble as the temperature increases. Additionally, the solubility will be affected by the other constituents present in a waste. As a general rule, nitrates, chlorides, and sulfates are more soluble than hydroxides, sulfides, carbonates, and phosphates.

An important concept related to treatment of the soluble metal compounds is pH. This term provides a measure of the extent to which a solution contains either an excess of hydrogen or hydroxide ions. The pH scale ranges from 0 to 14, with 0 being the most acidic, 14 representing the highest alkalinity or hydroxide ion (OH^-) content, and 7.0 being neutral.

When hydroxide is used, as is often the case, to precipitate the soluble metal compounds, the pH is frequently monitored to ensure that sufficient treatment chemicals are added. It is important to point out that pH is not a good measure of treatment chemical addition for compounds other than hydroxides; when sulfide is used, for example, facilities might use an oxidation-reduction potential meter (ORP) correlation to ensure that sufficient treatment chemical is used.

Following conversion of the relatively soluble metal compounds to metal precipitates, the effectiveness of chemical precipitation is a function of the physical removal, which usually relies on a settling process. A particle of a specific size, shape, and composition will settle at a specific velocity, as described by Stokes' Law. For a batch

system, Stokes' law is a good predictor of settling time because the pertinent particle parameters remain essentially constant. Nevertheless, in practice, settling time for a batch system is normally determined by empirical testing. For a continuous system, the theory of settling is complicated by factors such as turbulence, short-circuiting, and velocity gradients, increasing the importance of the empirical tests.

(3) Description of the Technology

The equipment and instrumentation required for chemical precipitation varies depending on whether the system is batch or continuous. Both operations are discussed below; a schematic of the continuous system is shown in Figure 3-3.

For a batch system, chemical precipitation requires only a feed system for the treatment chemicals and a second tank where the waste can be treated and allowed to settle. When lime is used, it is usually added to the reaction tank in a slurry form. In a batch system, the supernate is usually analyzed before discharge, thus minimizing the need for instrumentation.

In a continuous system, additional tanks are necessary, as well as instrumentation to ensure that the system is operating properly. In this system, the first tank that the wastewater enters is referred to as an equalization tank. This is where the waste can be mixed in order to provide more uniformity, minimizing wide swings in the type and concentration of constituents being sent to the reaction tank. It is important to reduce the variability of the waste sent to the reaction

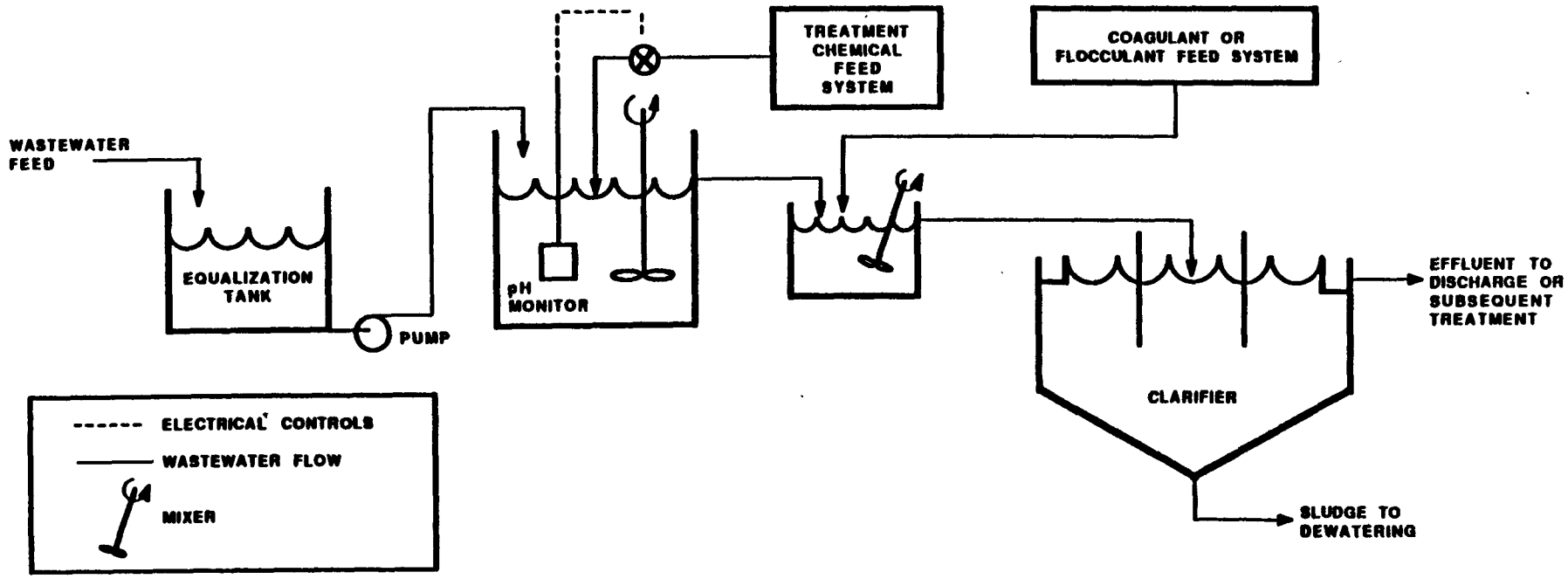

FIGURE 3-3 CONTINUOUS CHEMICAL PRECIPITATION

tank because control systems inherently are limited with regard to the maximum fluctuations that can be managed.

Following equalization, the waste is pumped to a reaction tank where treatment chemicals are added; this is done automatically by using instrumentation that senses the pH of the system and then pneumatically adjusts the position of the treatment chemical feed valve such that the design pH value is achieved. Both the complexity and the effectiveness of the automatic control system will vary depending on the variation in the waste and the pH range that is needed to properly treat the waste.

An important aspect of the reaction tank design is that it be well-mixed so that the waste and the treatment chemicals are both dispersed throughout the tank, in order to ensure comingling of the reactant and the treatment chemicals. In addition, effective dispersion of the treatment chemicals throughout the tank is necessary to properly monitor and thereby control the amount of treatment chemicals added.

After the waste is reacted with the treatment chemical, it flows to a quiescent tank where the precipitate is allowed to settle and subsequently be removed. Settling can be chemically assisted through the use of flocculating compounds. Flocculants increase the particle size and density of the precipitated solids, both of which increase the rate of settling. The particular flocculating agent that will best improve settling characteristics will vary depending on the particular waste; selection of the flocculating agent is generally accomplished by performing laboratory bench tests. Settling can be conducted in a large

tank by relying solely on gravity or can be mechanically assisted through the use of a circular clarifier or an inclined separator. Schematics of the latter two separators are shown in Figures 3-4 and 3-5.

Filtration can be used for further removal of precipitated residuals both in cases where the settling system is underdesigned and in cases where the particles are difficult to settle. Polishing filtration is discussed in a separate technology section.

(4) Waste Characteristics Affecting Performance

In determining whether chemical precipitation is likely to achieve the same level of performance on an untested waste as on a previously tested waste, we will examine the following waste characteristics: (a) the concentration and type of the metal(s) in the waste, (b) the concentration of suspended solids (TSS), (c) the concentration of dissolved solids (TDS), (d) whether the metal exists in the wastewater as a complex, and (e) the oil and grease content. These parameters affect the chemical reaction of the metal compound, the solubility of the metal precipitate, or the ability of the precipitated compound to settle.

(a) Concentration and type of metals. For most metals, there is a specific pH at which the metal hydroxide is least soluble. As a result, when a waste contains a mixture of many metals, it is not possible to operate a treatment system at a single pH that is optimal for the removal of all metals. The extent to which this affects treatment depends on the particular metals to be removed, and their

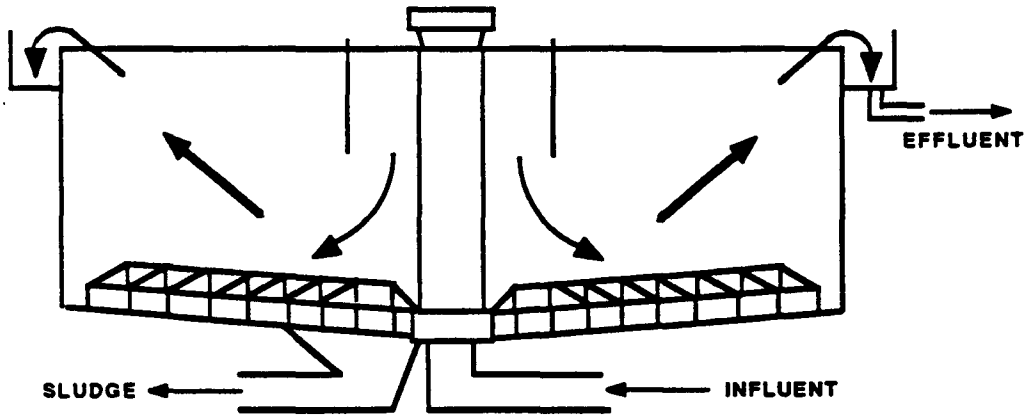

CENTER FEED CLARIFIER WITH SCRAPER SLUDGE REMOVAL SUSTEM

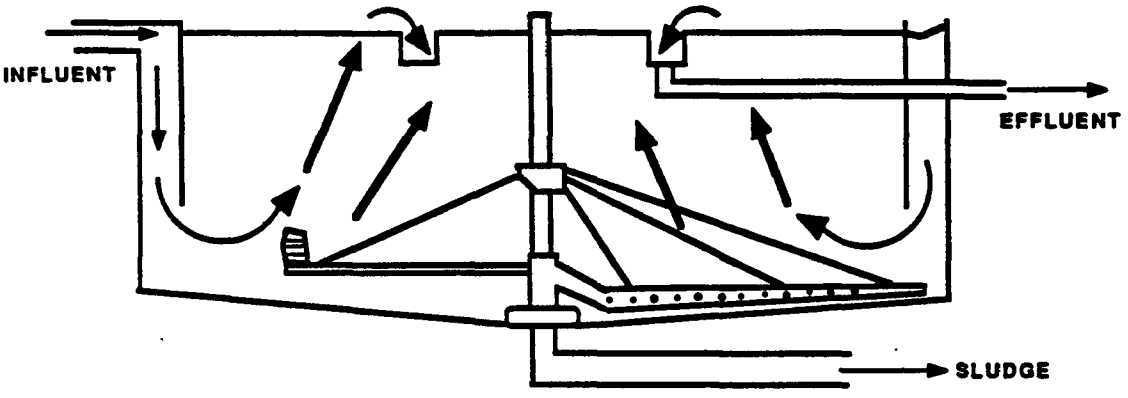

RIM FEED - CENTER TAKEOFF CLARIFIER WITH
HYDRAULIC SUCTION SLUDGE REMOVAL SYSTEM

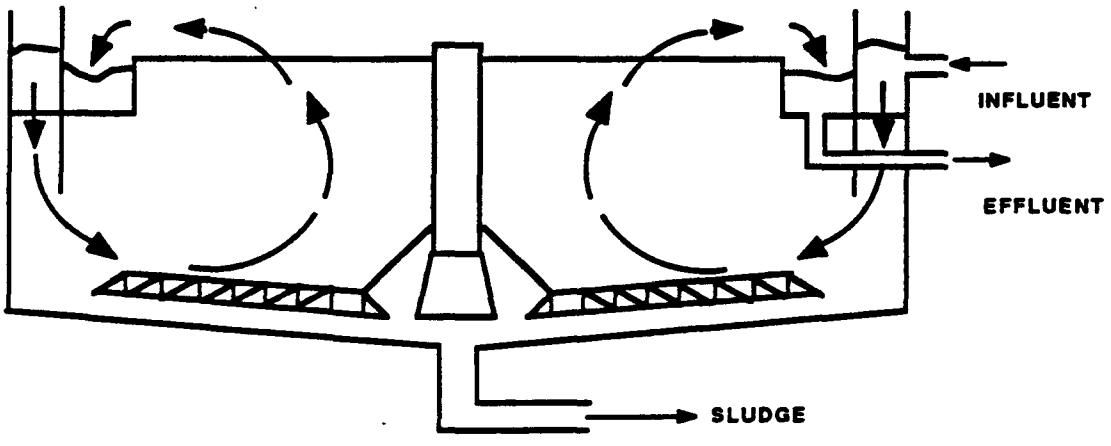

RIM FEED - RIM TAKEOFF CLARIFIER

FIGURE 3-4
CIRCULAR CLARIFIERS

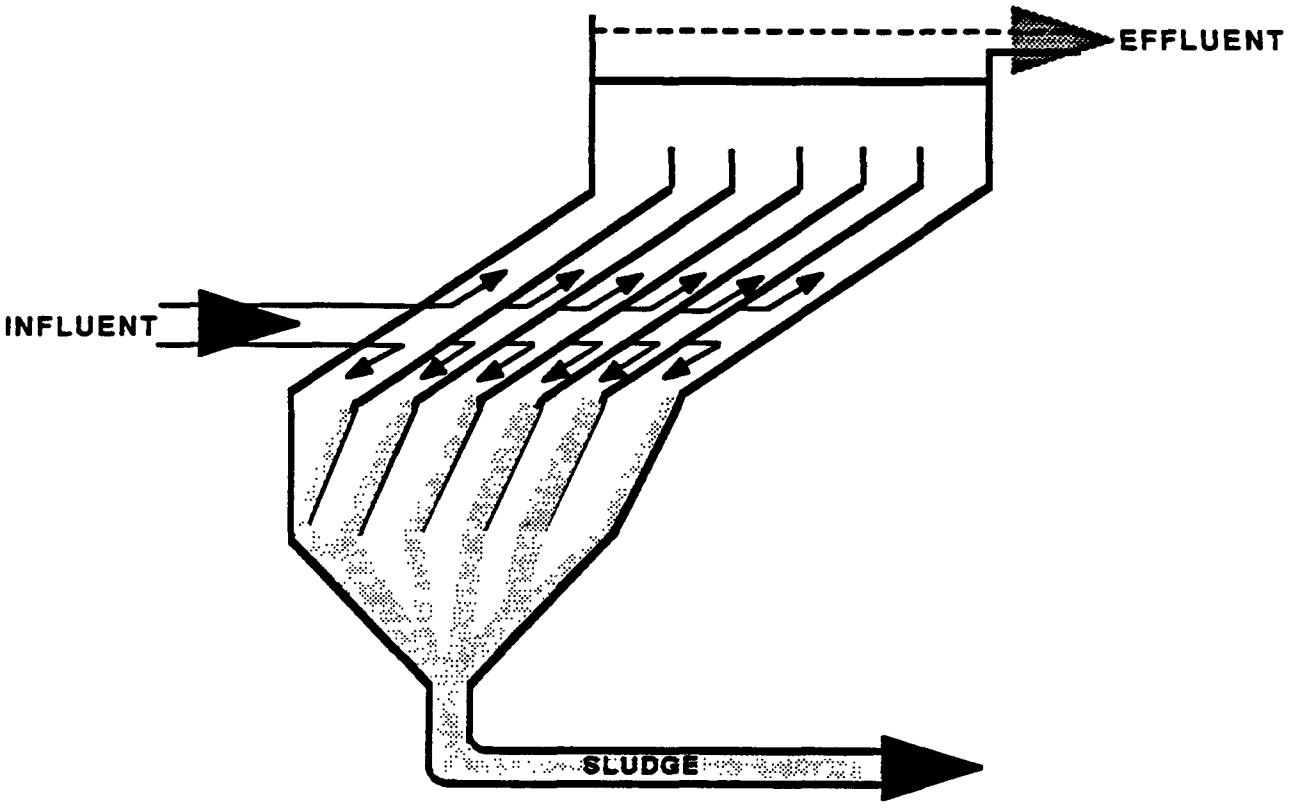

FIGURE 3-5
INCLINED PLATE SETTLER

concentrations. An alternative can be to operate multiple precipitations, with intermediate settling, when the optimum pH occurs at markedly different levels for the metals present. The individual metals and their concentrations can be measured using EPA Method 6010.

(b) Concentration and type of total suspended solids (TSS). Certain suspended solid compounds are difficult to settle because of either their particle size or shape. Accordingly, EPA will evaluate this characteristic in assessing transfer of treatment performance. Total suspended solids can be measured by EPA Wastewater Test Method 160.2.

(c) Concentration of total dissolved solids (TDS). Available information shows that total dissolved solids can inhibit settling. The literature states that poor flocculation is a consequence of high TDS and shows that higher concentrations of total suspended solids are found in treated residuals. Poor flocculation can adversely affect the degree to which precipitated particles are removed. Total dissolved solids can be measured by EPA Wastewater Test Method 160.1.

(d) Complexed metals. Metal complexes consist of a metal ion surrounded by a group of other inorganic or organic ions or molecules (often called ligands). In the complexed form, the metals have a greater solubility and, therefore, may not be as effectively removed from solution by chemical precipitation. EPA does not have an analytical method to determine the amount of complexed metals in the waste. The Agency believes that the best measure of complexed metals is to analyze for some common complexing compounds (or complexing agents) generally

found in wastewater for which analytical methods are available. These complexing agents include ammonia, cyanide, and EDTA. The analytical method for cyanide is EPA Method 9010. The method for EDTA is ASTM Method D3113. Ammonia can be analyzed using EPA Wastewater Test Method 350.

(e) Oil and grease content. The oil and grease content of a particular waste directly inhibits the settling of the precipitate. Suspended oil droplets float in water and tend to suspend particles such as chemical precipitates that would otherwise settle out of the solution. Even with the use of coagulants or flocculants, the separation of the precipitate is less effective. Oil and grease content can be measured by EPA Method 9071.

(5) Design and Operating Parameters

The parameters that EPA will evaluate when determining whether a chemical precipitation system is well designed are: (a) design value for treated metal concentrations, as well as other characteristics of the waste used for design purposes (e.g., total suspended solids), (b) pH, (c) residence time, (d) choice of treatment chemical, and (e) choice of coagulant/flocculant. Below is an explanation of why EPA believes these parameters are important to a design analysis; in addition, EPA explains why other design criteria are not included in EPA's analysis.

(a) Treated and untreated design concentrations. EPA pays close attention to the treated concentration the system is designed to achieve when determining whether to sample a particular facility. Since the

system will seldom out-perform its design, EPA must evaluate whether the design is consistent with best demonstrated practice.

The untreated concentrations that the system is designed to treat are important in evaluating any treatment system. Operation of a chemical precipitation treatment system with untreated waste concentrations in excess of design values can easily result in poor performance.

(b) pH. The pH is important, because it can indicate that sufficient treatment chemical (e.g., lime) is added to convert the metal constituents in the untreated waste to forms that will precipitate. The pH also affects the solubility of metal hydroxides and sulfides, and therefore directly impacts the effectiveness of removal. In practice, the design pH is determined by empirical bench testing, often referred to as "jar" testing. The temperature at which the "jar" testing is conducted is important in that it also affects the solubility of the metal precipitates. Operation of a treatment system at temperatures above the design temperature can result in poor performance. In assessing the operation of a chemical precipitation system, EPA prefers continuous data on the pH and periodic temperature conditions throughout the treatment period.

(c) Residence time. The residence time is important because it impacts the completeness of the chemical reaction to form the metal precipitate and, to a greater extent, the amount of precipitate that settles out of solution. In practice, it is determined by "jar" testing. For continuous systems, EPA will monitor the feed rate to ensure that the system is operated at design conditions. For batch

systems, EPA will want information on the design parameter used to determine sufficient settling time (e.g., total suspended solids).

(d) Choice of treatment chemical. A choice must be made as to what type of precipitating agent (i.e., treatment chemical) will be used. The factor that most affects this choice is the type of metal constituents to be treated. Other design parameters, such as pH, residence time, and choice of coagulant/flocculant agents, are based on the selection of the treatment chemical.

(e) Choice of coagulant/flocculant. This is important because these compounds improve the settling rate of the precipitated metals and allows for smaller systems (i.e., lower retention time) to achieve the same degree of settling as a much larger system. In practice, the choice of the best agent and the required amount is determined by "jar" testing.

(f) Mixing. The degree of mixing is a complex assessment that includes, among other things, the energy supplied, the time the material is mixed, and the related turbulence effects of the specific size and shape of the tank. EPA will, however, consider whether mixing is provided and whether the type of mixing device is one that could be expected to achieve uniform mixing. For example, EPA may not use data from a chemical precipitation treatment system where an air hose was placed in a large tank to achieve mixing.

3.3 Performance Data for Nonwastewater

The Agency collected seven data sets of untreated and treated data for treatment of brine purification muds (nonwastewater) in a treatment system that consisted of acid leaching, chemical oxidation, and sludge dewatering/acid washing (as described in Section 3.2.1) and one data set for treatment of saturator insolubles (nonwastewater) by a one-step acid leaching (percolation) treatment process (see Section 3.2.1.1(4)). These data are presented in Tables 3-1 to 3-8. These data show that the acid leaching treatment system for which data on treatment of brine purification muds were collected is effective in reducing the total and leachate concentrations for mercury in K071 waste. The data in Table 3-8 show that the one step acid leaching (percolation) treatment of the saturator insolubles did not effectively reduce either total or leachate concentration of mercury. Table 3-9 presents the waste characteristics affecting performance for the K071 nonwastewater for acid leaching and chemical oxidation. Additional data were submitted by industry for treatment of K071 nonwastewaters by dewatering/water washing. Appendix A contains 12 data sets of total waste concentration and EP leachate analyses and two TCLP leachate analyses of the treated solids for dewatering/water washing treatment submitted by one plant, designated Plant A. Appendix A also includes 24 data sets of total waste concentration and EP leachate analyses of the treated solids for dewatering/water washing submitted by another plant, designated Plant B, and 232 data values for EP leachate analysis of the treated waste for

dewatering/water washing treatment submitted by a third plant, designated Plant C. These data show that these treatment systems are effective in reducing the total and leachate concentrations for mercury in K071 waste.

3.4 Performance Data for Wastewater

The Agency collected three data sets of untreated and treated data for treatment of K071 wastewater in a sulfide precipitation and filtration treatment system. The data for K071 wastewater are presented in Tables 3-10 to 3-12. These data show that K071 wastewater can be treated effectively for removal of mercury and other BDAT metals by sulfide precipitation and filtration.

Table 3-1 EPA-Collected Data for Treatment of K071 Waste

Sample Set #1[a]

ANALYTICAL DATA:

BDAT list constituent	Untreated waste (total) (mg/l)	Untreated waste (TCLP) (mg/l)	Treated waste (total) (mg/kg)	Treated waste (TCLP) (mg/l)
Barium	0.57	0.31	3.3	0.12
Cadmium	<0.3	<0.06	<1.5	0.006
Copper	<0.8	<0.16	<4.0	0.06
Lead	<6.6	<1.3	<33	2.0
Mercury	17.0	0.44	2.7	0.0003
Nickel	4.87	0.54	24	0.08
Thallium	12.2	<1.7	62	0.25
Zinc	2.29	0.11	5.4	0.21

DESIGN AND OPERATING PARAMETERS:

Parameter	Design value	Operating value
pH of acid leaching	2.5 - 3.0	2.94
pH of oxidation	6.5	6.4
Residence time of oxidation	> 0.05 hr	0.25 hr
Filter vacuum	> 5.0 in Hg	5.0 in Hg

[a]Brine purification muds.

Reference: USEPA 1988. Tables 3-1 and 5-2.

Table 3-2 EPA-Collected Data for Treatment of K071 Waste

Sample Set #2[a]

ANALYTICAL DATA.

BDAT list constituent	Untreated waste (total) (mg/l)	Untreated waste (TCLP) (mg/l)	Treated waste (total) (mg/kg)	Treated waste (TCLP) (mg/l)
Barium	0.57	0.31	3.2	0.13
Cadmium	<0.3	<0.06	<1.5	0.04
Copper	<0.8	<0.16	<4.0	<0.08
Lead	<6.6	<1.32	<33	0.84
Mercury	17.0	0.44	4.8	<0.0002
Nickel	4 87	0.54	23	<0.13
Thallium	12.2	<1.7	51	<0.86
Zinc	2.29	0.11	4.7	0.18

DESIGN AND OPERATING PARAMETERS

Parameter	Design value	Operating value
pH of acid leaching	2.5 - 3.0	2.95
pH of oxidation	6.5	6.4
Residence time of oxidation	> 0.05 hr	0.25 hr
Filter vacuum	> 5.0 in Hg	5.0 in Hg

[a]Brine purification muds.

Reference: USEPA 1988. Tables 3-1 and 5-3.

Table 3-3 EPA-Collected Data for Treatment of K071 Waste

Sample Set #3[a]

ANALYTICAL DATA:

BDAT list constituent	Untreated waste (total) (mg/l)	Untreated waste (TCLP) (mg/l)	Treated waste (total) (mg/kg)	Treated waste (TCLP) (mg/l)
Barium	0.814	0.22	2.7	0.18
Cadmium	<0.15	<0.3	<1.5	0.13
Copper	1.19	<0.8	<4.0	<0.16
Lead	<3.3	<6.6	<33	<1.3
Mercury	22.1	20	1.8	2.0
Nickel	3.15	<1.3	21	<0.26
Thallium	7.74	<8.6	51	<1.7
Zinc	3.18	0.92	3.9	0.25

DESIGN AND OPERATING PARAMETERS:

Parameter	Design value	Operating value
pH of acid leaching	2.5 - 3.0	2.93
pH of oxidation	6.5	6.4
Residence time of oxidation	> 0.05 hr	0.38 hr
Filter vacuum	> 5.0 in Hg	7.0 in Hg

[a]Brine purification muds.

Reference: USEPA 1988. Tables 3-1 and 5-4.

Table 3-4 EPA-Collected Data for Treatment of K071 Waste

Sample Set #4[a]

ANALYTICAL DATA:

BDAT list constituent	Untreated waste (total) (mg/l)	Untreated waste (TCLP) (mg/l)	Treated waste (total) (mg/kg)	Treated waste (TCLP) (mg/l)
Barium	0.814	0.22	2.7	0.16
Cadmium	<0.15	<0.3	<3.0	<0.01
Copper	1.19	<0.8	<4.0	0.05
Lead	<3.3	<6.6	<33	0.33
Mercury	22.1	20	1.7	0.0002
Nickel	3.15	<1.3	20	0.13
Thallium	7.74	<8.6	<43	<0.43
Zinc	3.18	0.92	3.1	0.28

DESIGN AND OPERATING PARAMETERS:

Parameter	Design value	Operating value
pH of acid leaching	2.5 - 3.0	2.93
pH of oxidation	6.5	6.4
Residence time of oxidation	> 0.05 hr	0.36 hr
Filter vacuum	> 5.0 in Hg	7.0 in Hg

[a]Brine purification muds.

Reference. USEPA 1988. Tables 3-1 and 5-5.

Table 3-5 EPA-Collected Data for Treatment of K071 Waste

Sample Set #5[a]

ANALYTICAL DATA:

BDAT list constituent	Untreated waste (total) (mg/l)	Untreated waste (TCLP) (mg/l)	Treated waste (total) (mg/kg)	Treated waste (TCLP) (mg/l)
Barium	0.814	0.22	2.4	0.16
Cadmium	<0.15	<0.3	<1.5	0.003
Copper	1.19	<0.8	<4.0	0.05
Lead	<3.3	<6.6	<33	0.16
Mercury	22.1	20	1.2	0.0005
Nickel	3.15	<1.3	21	0.07
Thallium	7.74	<8.6	43	0.26
Zinc	3.18	0.92	5.0	0.23

DESIGN AND OPERATING PARAMETERS:

Parameter	Design value	Operating value
pH of acid leaching	2.5 - 3.0	2.94
pH of oxidation	6.5	6.4
Residence time of oxidation	> 0.05 hr	0.46 hr
Filter vacuum	> 5.0 in Hg	7.0 in Hg

[a]Brine purification muds.

Reference: USEPA 1988. Tables 3-1 and 5-6.

Table 3-6 EPA-Collected Data for Treatment of K071 Waste

Sample Set #6[a]

ANALYTICAL DATA

BDAT list constituent	Untreated waste (total) (mg/l)	Untreated waste (TCLP) (mg/l)	Treated waste (total) (mg/kg)	Treated waste (TCLP) (mg/l)
Barium	1.1	0.34	2.4	0.14
Cadmium	<1.5	<0.06	<1.5	<0.01
Copper	<4.0	<0.16	<4.0	0.05
Lead	<33	<1.3	<33	<0.33
Mercury	20.6	2.1	1.8	0.0016
Nickel	<6.5	0.31	22	0.11
Thallium	<43	<1.7	<43	<0.43
Zinc	3.05	0.37	5.3	0.41

DESIGN AND OPERATING PARAMETERS:

Parameter	Design value	Operating value
pH of acid leaching	2.5 - 3.0	2.92
pH of oxidation	6.5	6.4
Residence time of oxidation	> 0.05 hr	0.30 hr
Filter vacuum	> 5.0 in Hg	11 in Hg

[a]Brine purification muds

Reference: USEPA 1988. Tables 3-1 and 5-7.

Table 3-7 EPA-Collected Data for Treatment of K071 Waste

Sample Set #7[a]

ANALYTICAL DATA.

BDAT list constituent	Untreated waste (total) (mg/l)	Untreated waste (TCLP) (mg/l)	Treated waste (total) (mg/kg)	Treated waste (TCLP) (mg/l)
Barium	1.1	0.34	3.1	0.16
Cadmium	<1.5	<0.06	<1.5	<0.003
Copper	<4.0	<0.16	<4.0	0.05
Lead	<33	<1.3	<33	0.07
Mercury	20.6	2.1	1.7	<0.0002
Nickel	<6.5	0.31	24	0.09
Thallium	<43	<1.7	<43	0.18
Zinc	3.05	0.37	5.3	0.34

DESIGN AND OPERATING PARAMETERS:

Parameter	Design value	Operating value
pH of acid leaching	2.5 - 3.0	2.91
pH of oxidation	6.5	6.4
Residence time of oxidation	> 0.05 hr	0.31 hr
Filter vacuum	> 5.0 in Hg	11 in Hg

[a]Brine purification muds

Reference: USEPA 1988. Tables 3-1 and 5-8.

Table 3-8 EPA-Collected Data for Acid Leaching (Percolation)

Sample Set #8[b]

ANALYTICAL DATA

BDAT list constituent	Untreated waste (total) (mg/l)	Untreated waste (TCLP) (mg/l)	Treated waste (total) (mg/kg)	Treated waste (TCLP) (mg/l)
Barium	1.4	0.2	2.2	0.18
Cadmium	<1.5	0.09	<1.5	<0.06
Copper	<4.0	<0.16	<4.0	0.16
Lead	<33	<1.3	<33	1.3
Mercury	1.1	0.0006	1.6	0.0006
Nickel	7.9	<0.26	<6.5	0.46
Silver	<2.5	0.45	<2.5	<0.25
Thallium	<43	<1.7	<43	<1.7
Zinc	2.5	0.42	1.8	0.18

DESIGN AND OPERATING PARAMETERS:

Parameter	Design value	Operating value
pH of acid leaching	3.0	3.0
Retention time for acid leaching	>3.0 hrs	1.0 hr

[b]Saturator insolubles.

Reference: USEPA 1988. Tables 3-3 and 5-12.

Table 3-9 Waste Characteristics Affecting Performance for Acid Leaching

WASTE CHARACTERISTICS AFFECTING PERFORMANCE:

Parameter	Value
Chemical form of hazardous constituents	The mercury content of the waste may be present as $HgCl_2$, HgO, or Hg.

Reference: USEPA 1988.

Table 3-10 Sulfide Precipitation - EPA-Collected Data

Sample Set #1

ANALYTICAL DATA.

BDAT list constituent	Untreated wastewater (mg/l)	Filter cake (K106)[a] (total) (mg/kg)	Filter cake (K106)[a] (TCLP) (mg/l)	Treated wastewater (mg/l)
Arsenic	<0.2	1.1	<0.01	<0.2
Barium	0.248	74	0.74	0.103
Cadmium	<0.03	2.3	0.02	<0.06
Chromium	<0.06	6.3	<0.01	0.553
Copper	0.097	133	<0.02	<0.16
Lead	<0.66	50	0.13	<1.32
Mercury	23.7	25,900	0.01	0.028
Nickel	0.157	14	0.15	0.275
Silver	0.148	131	<0.02	<0.1
Vanadium	<0.04	0.46	<0.01	<0.08
Zinc	0.615	443	1.7	0.047

DESIGN AND OPERATING PARAMETERS.

Parameter	Design value	Operating value
Excess sulfide	>40 mg/l	85 mg/l

[a] Only one sample was collected of the filter cake (K106)

Reference: USEPA 1988. Tables 3-2 and 5-9.

Table 3-11 Sulfide Precipitation - EPA-Collected Data

Sample Set #2

ANALYTICAL DATA.

BDAT list constituent	Untreated wastewater (mg/l)	Filter cake (K106)[a] (total) (mg/kg)	Filter cake (K106)[a] (TCLP) (mg/l)	Treated wastewater (mg/l)
Arsenic	<0.1	1.1	<0.01	<0.1
Barium	0.226	74	0.74	0.158
Cadmium	<0.06	2.3	0.02	<0.06
Chromium	0.189	6.3	<0.01	<0 12
Copper	<0.16	133	<0.02	<0.16
Lead	<1.32	50	0.13	<1.32
Mercury	9.25	25,900	0.01	0.027
Nickel	<0.26	14	0.15	<0.26
Silver	0.1	131	<0.02	<0.1
Vanadium	<0.08	0.46	<0.01	<0.08
Zinc	0.88	443	1 7	<0.04

DESIGN AND OPERATING PARAMETERS:

Parameter	Design value	Operating value
Excess sulfide	>40 mg/l	101 mg/l

[a] Only one sample was collected of the filter cake (K106).

Reference: USEPA 1988. Tables 3-2 and 5-10

Table 3-12 Sulfide Precipitation - EPA-Collected Data

Sample Set #3

ANALYTICAL DATA

BDAT list constituent	Untreated wastewater (mg/l)	Filter cake (K106)[a] (total) (mg/kg)	Filter cake (K106)[a] (TCLP) (mg/l)	Treated wastewater (mg/l)
Arsenic	<0.1	1.1	<0.01	<0.1
Barium	0.293	74	0.74	0.144
Cadmium	<0.06	2.3	0.02	<0.06
Chromium	<0.12	6.3	<0.01	<0.12
Copper	<0.16	133	<0.02	<0.16
Lead	<1.32	50	0.13	<1.32
Mercury	77.2	25,900	0 01	0.028
Nickel	<0.26	14	0.15	<0.26
Silver	0.12	131	<0 02	<0.1
Vanadium	<0 08	0.46	<0.01	<0.08
Zinc	0 535	443	1.7	0.064

DESIGN AND OPERATING PARAMETERS.

Parameter	Design value	Operating value
Excess sulfide	>40 mg/l	96 mg/l

[a] Only one sample was collected of the filter cake (K106).

Reference: USEPA 1988. Tables 3-2 and 5-11.

4. IDENTIFICATION OF BEST DEMONSTRATED AVAILABLE TECHNOLOGY (BDAT) FOR K071

This section presents the rationale for selection of the best technology of those that have been demonstrated for treatment of K071 waste. In Section 3, the technologies demonstrated for treatment of this waste were identified. These are: (1) a treatment system consisting of acid leaching followed by chemical oxidation followed by dewatering/acid washing followed by sulfide precipitation and filtration treatment of the filtrate from the dewatering step, (2) dewatering/water washing followed by chemical precipitation and filtration treatment of the filtrate, and (3) stabilization.

There are three primary differences between the dewatering/water washing treatment system (technology (2) above) and the acid leaching treatment train (technology (1) above). The first difference is that in the acid leaching treatment step some of the metal constituents (including mercury) are more fully solubilized from the solid portion of the nonwastewater. The second is that the acid leaching treatment step produces solids of different characteristics than the untreated waste (calcium sulfate instead of calcium carbonate) and allows a more efficient washing of the solids as they are being filtered. The third difference is that the chemical oxidation step in the acid leaching system solubilizes any mercury present in the elemental form in the untreated waste. The combination of these three factors, along with the use of an acid washing step during filtration, allows more metals to be removed from the waste than by filtration/washing alone.

The data presented for those technologies (in Section 3 and Appendices A and B) will be evaluated based on the following screening procedure. First, only leachate data obtained using the TCLP leaching procedure will be considered. (The reason that EP leachate data are not considered is discussed in Section 1 of this report.) If design and operating data are reported for a data point or data set (paired influent and effluent data), then these will be considered. Data points or data sets that reflect the operation of poorly designed treatment systems or systems that were not well operated at the time of treatment data collection will not be used in development of treatment standards. Once these data have been deleted, all remaining data will be adjusted based on the analytical recovery values obtained from laboratory quality assurance/quality control (QA/QC) analyses to take into account analytical interferences associated with the sample. Finally, treatment values for each technology for which the Agency has treatment data will be compared by the analysis of variance (ANOVA) test, as presented in Appendix C. This test will indicate if one technology performs significantly better than another.

4.1 Data Screening

The available treatment data for K071 were reviewed and assessed in order to determine whether they contained information on design and operation of the system, quality assurance/quality control analysis of the data, and the proper chemical analyses to indicate the performance of the treatment system. Data collected by the Agency for acid leaching

treatment of K071 nonwastewaters are presented in Table 4-1. Data collected for treatment of K071 wastewaters are presented in Table 4-2.

EP leachate results submitted by plants A, B, and C, presented in Appendix A, were not considered in developing the treatment standards because TCLP data were available.

One data point collected by the Agency, for TCLP analysis of mercury in the treated waste for sample set 3, was not used because the leachate result indicated a laboratory error in either sampling or analysis (the leachate concentration was higher than the corresponding total waste concentration).

4.2 Data Accuracy

After data were eliminated from consideration for analysis of BDAT based on the screening tests discussed above, EPA adjusted the data values remaining based on the analytical recovery values in order to take into account analytical interferences associated with the chemical makeup of the treated sample. In developing recovery data (also referred to as accuracy data), EPA first analyzed a waste for a constituent and then added a known amount of the same constituent (i.e., spike) to the waste material. The total amount recovered after spiking minus the initial concentration in the sample divided by the amount added is the recovery value. Percent recovery values for BDAT list metals used in adjustment of the performance data are presented in Appendix B. The analytical data were adjusted for accuracy using the lowest recovery value for each constituent. These adjusted values for the acid leaching treatment

system described in Section 3.2.1 and for a single step dewatering/water washing process were then used to determine BDAT for K071.

4.3 Analysis of Variance

In cases where the Agency has data on treatment of the same or similar wastes using more than one technology, we performed an analysis of variance (ANOVA) test to determine if one of the technologies performs significantly better than another. In cases where a particular treatment technology performs better, the treatment standard will be based on this best technology.

In order to determine BDAT for K071, both acid leaching and dewatering/water washing data were considered. In order to perform the ANOVA test to compare the two technologies, the accuracy-corrected data were used.

The ANOVA test was used to compare each set of data submitted for dewatering/water washing to the acid leaching data. In all cases, for both total constituent concentration and TCLP, the ANOVA indicated that the acid leaching treatment system performs significantly better than the dewatering/water washing system based on the mercury concentration in the treated waste.

4.4 Determination of Availability of Best Technology

Acid leaching followed by chemical oxidation followed by sludge dewatering/acid washing for nonwastewater and sulfide precipitation followed by filtration for wastewater were determined to be available to treat K071 wastes because: (1) these technologies are commercially

available, and (2) these technologies provide substantial reduction of hazardous constituent concentrations.

Table 4-1 Treatment Data Used For Regulation of K071 Nonwastewater

BDAT constituent	Sample Set #1 (total) (mg/kg)	Sample Set #1 (TCLP) (mg/l)	Sample Set #2 (total) (mg/kg)	Sample Set #2 (TCLP) (mg/l)	Sample Set #3 (total) (mg/kg)	Sample Set #3 (TCLP) (mg/l)	Sample Set #4 (total) (mg/kg)	Sample Set #4 (TCLP) (mg/l)	Sample Set #5 (total) (mg/kg)	Sample Set #5 (TCLP) (mg/l)	Sample Set #6 (total) (mg/kg)	Sample Set #6 (TCLP) (mg/l)	Sample Set #7 (total) (mg/kg)	Sample Set #7 (TCLP) (mg/l)
Barium	3.3	0.12	3.2	0.13	2 7	0.18	2 7	0.16	2 4	0.16	2 4	0 14	3 1	0 16
Cadmium	<1.5	0.006	<1.5	0.04	<1.5	0.13	<3.0	<0 01	<1.5	0.003	<1.5	<0 01	<1 5	<0 003
Copper	<4.0	0.06	<4.0	<0.08	<4 0	<0 16	<4.0	0.05	<4.0	0.05	<4 0	0 05	<4 0	0 05
Lead	<33	2.0	<33	0.84	<33	<1 3	<33	0.33	<33	0.16	<33	<0 33	<33	0 07
Mercury	2 7	0.0003	4 8	<0 0002	1.8	*	1.7	0.0002	1 2	0.0005	1 8	0 0016	1 7	<0 0002
Nickel	24	0.08	23	<0 13	21	<0.26	20	0.13	21	0.07	22	0 11	24	0 09
Thallium	62	0.25	51	<0.86	51	<1 7	<43	<0 43	43	0.26	<43	<0 43	<43	0 18
Zinc	5.4	0.21	4.7	0.18	3 9	0.25	3.1	0.28	5.0	0.23	5 3	0.41	5 3	0 34

* Data point eliminated because of laboratory error.

Table 4-2 Treatment Data Used for Regulation of K071 Wastewater

BDAT constituent	Sample Set #1 (mg/l)	Sample Set #2 (mg/l)	Sample Set #3 (mg/l)
Barium	0.103	0.158	0.144
Chromium	0 553	<0.12	<0.12
Mercury	0.028	0.027	0.028
Nickel	0.275	<0.26	<0.26
Silver	<0.1	<0.1	<0.1
Zinc	0.047	<0.04	0.064

5. SELECTION OF REGULATED CONSTITUENTS

This section describes, step by step, the process used to select the constituents to be regulated for K071. The selected constituents must be present in the untreated waste at concentrations that are treatable by the chosen BDAT discussed in Section 4.

As discussed in Section 1, the Agency has developed a list of hazardous constituents (Table 1-1) from which the constituents to be regulated are selected. The list is a "growing list" that does not preclude the addition of new constituents as additional key parameters are identified. The list is divided into the following categories: volatile organics, semivolatile organics, metals, inorganics other than metals, organochlorine pesticides, phenoxyacetic acid herbicides, organophosphorous insecticides, PCBs, and dioxins and furans. The constituents in each category have similar chemical properties and are analyzed for by the same analytical methods, with the exception of the inorganics.

Table 5-1 presents the BDAT constituent list as discussed in Section 1 and indicates which of the BDAT list constituents were analyzed for in the untreated waste and which of those that were analyzed for were detected.

One sample of the K071 waste was analyzed for volatile organics, semivolatile organics, and total organic carbon. This waste is produced from the treatment of a brine solution with inorganic chemicals, and thus is not expected to contain BDAT list organic compounds other than at

levels normally found in the process makeup water. Analysis of this waste for volatile organic compounds showed only low concentrations of chlorinated and brominated methanes that are below treatable levels. Of the 170 volatile and semivolatile organic constituents on the list, we analyzed for 80. Of the 80 analyzed for, 4 volatiles and no semivolatiles were detected. The BDAT list volatile and semivolatile organic compounds not analyzed for were not listed on the BDAT list of constituents at the time that this treatment system was sampled. Of the 16 metals on the BDAT list of constituents, we analyzed for 15. Hexavalent chromium was not analyzed for because it was not on the BDAT list of constituents at the time this treatment system was sampled. Of the 15 metals analyzed for, 6 were detected in both the total concentration and TCLP analyses and 2 were detected only in the TCLP.

The untreated waste samples were not analyzed for other classes of organics (organochlorine pesticides, phenoxyacetic acid herbicides, organophosphorus insecticides, PCBs, and dioxins and furans) because there is no in-process source of these contaminants and because of the extreme unlikelihood of finding these contaminants at treatable levels in the waste. The three inorganics were not analyzed for because they were not included on the BDAT list at the time of sampling.

In Section 4, acid leaching followed by chemical oxidation followed by dewatering/acid washing was determined to be BDAT for K071 nonwastewaters. The acid leaching treatment train is designed to remove mercury and other BDAT list metals that are solubilized under treatment

conditions that maximize mercury removal. Mercury is the only constituent detected in the untreated waste at treatable concentrations. No other constituents were detected in the treated waste that were not detected in the untreated waste. Therefore, mercury was selected as the regulated constituent for this waste. BDAT list metals for which the chloride or sulfate salts are not soluble (e.g., thallium) will not be removed by this treatment system, but will be concentrated in the treated solids. These metals will not be regulated here. The data on characterization of the treated K071 nonwastewater do not indicate that further significant reductions in the leachability of these metals could be obtained by stabilization treatment of the residual from the BDAT treatment system.

Table 5-1 BDAT List of Constituents

BDAT reference no	Parameter	CAS no.	Detection status
Volatiles			
222.	Acetone	67-64-1	NA
1.	Acetonitrile	75-05-8	NA
2.	Acrolein	107-02-8	NA
3.	Acrylonitrile	107-13-1	NA
4.	Benzene	71-43-2	ND
5.	Bromodichloromethane	75-27-4	D
6.	Bromomethane	74-83-9	ND
223.	n-Butyl alcohol	71-36-3	NA
7.	Carbon tetrachloride	56-23-5	ND
8.	Carbon disulfide	75-15-0	ND
9.	Chlorobenzene	108-90-7	ND
10.	2-Chloro-1,3-butadiene	126-99-8	NA
11.	Chlorodibromomethane	124-48-1	D
12.	Chloroethane	75-00-3	ND
13.	2-Chloroethyl vinyl ether	110-75-8	ND
14.	Chloroform	67-66-3	D
15.	Chloromethane	74-87-3	ND
16.	3-Chloropropene	107-05-1	NA
17.	1,2-Dibromo-3-chloropropane	96-12-8	NA
18.	1,2-Dibromoethane	106-93-4	NA
19.	Dibromomethane	74-95-3	NA
20.	trans-1,4-Dichloro-2-butene	110-57-6	NA
21.	Dichlorodifluoromethane	75-71-8	NA
22.	1,1-Dichloroethane	75-34-3	ND
23.	1,2-Dichloroethane	107-06-2	ND
24.	1,1-Dichloroethylene	75-35-4	ND
25.	trans-1,2-Dichloroethene	156-60-5	ND
26.	1,2-Dichloropropane	78-87-5	ND
27.	trans-1,3-Dichloropropene	10061-02-6	ND
28.	cis-1,3-Dichloropropene	10061-01-5	ND
29.	1,4-Dioxane	123-91-1	NA
224.	2-Ethoxyethanol	110-80-5	NA
225.	Ethyl acetate	141-78-6	NA
226.	Ethylbenzene	100-41-4	NA
30.	Ethyl cyanide	107-12-0	NA
227.	Ethyl ether	60-29-7	NA
31.	Ethyl methacrylate	97-63-2	NA
214.	Ethylene oxide	75-21-8	NA
32.	Iodomethane	74-88-4	NA
33.	Isobutyl alcohol	78-83-1	NA
228.	Methanol	67-56-1	NA
34.	Methyl ethyl ketone	78-93-3	NA

Table 5-1 (continued)

BDAT reference no.	Parameter	CAS no.	Detection status
Volatiles (continued)			
229.	Methyl isobutyl ketone	108-10-1	NA
35.	Methyl methacrylate	80-62-6	NA
37.	Methacrylonitrile	126-98-7	NA
38.	Methylene chloride	75-09-2	ND
230.	2-Nitropropane	79-46-9	NA
39.	Pyridine	110-86-1	NA
40.	1,1,1,2-Tetrachloroethane	630-20-6	NA
41.	1,1,2,2-Tetrachloroethane	79-34-6	ND
42.	Tetrachloroethene	127-18-4	ND
43.	Toluene	108-88-3	ND
44.	Tribromomethane	75-25-2	D
45.	1,1,1-Trichloroethane	71-55-6	ND
46.	1,1,2-Trichloroethane	79-00-5	ND
47.	Trichloroethene	79-01-6	ND
48.	Trichloromonofluoromethane	75-69-4	NA
49.	1,2,3-Trichloropropane	96-18-4	NA
231.	1,1,2-Trichloro-1,2,2-trifluoro-ethane	76-13-1	NA
50.	Vinyl chloride	75-01-4	ND
215.	1,2-Xylene	97-47-6	ND
216.	1,3-Xylene	108-38-3	ND
217.	1,4-Xylene	106-44-5	ND
Semivolatiles			
51.	Acenaphthalene	208-96-8	ND
52.	Acenaphthene	83-32-9	ND
53.	Acetophenone	96-86-2	NA
54.	2-Acetylaminofluorene	53-96-3	NA
55.	4-Aminobiphenyl	92-67-1	NA
56.	Aniline	62-53-3	NA
57.	Anthracene	120-12-7	ND
58.	Aramite	140-57-8	NA
218.	Benzal chloride	98-87-3	NA
59.	Benz(a)anthracene	56-55-3	ND
60.	Benzenethiol	108-98-5	NA
61.	Deleted		
63.	Benzo(b)fluoranthene	205-99-2	ND
65.	Benzo(k)fluoranthene	207-08-9	ND
64.	Benzo(ghi)perylene	191-24-2	ND
62.	Benzo(a)pyrene	50-32-8	ND
66.	p-Benzoquinone	106-51-4	NA

Table 5-1 (continued)

BDAT reference no.	Parameter	CAS no.	Detection status
Semivolatiles (continued)			
67.	Bis(2-chloroethoxy)methane	111-91-1	ND
68.	Bis(2-chloroethyl) ether	111-44-4	ND
69.	Bis(2-chloroisopropyl) ether	39638-32-9	ND
70.	Bis(2-ethylhexyl) phthalate	117-81-7	ND
71.	4-Bromophenyl phenyl ether	101-55-3	ND
72.	Butylbenzyl phthalate	85-68-7	ND
73.	2-sec-Butyl-4,6-dinitrophenol	88-85-7	NA
74.	p-Chloroaniline	106-47-8	ND
75.	Chlorobenzilate	510-15-6	NA
76.	p-Chloro-m-cresol	59-50-7	NA
77.	2-Chloronaphthalene	91-58-7	ND
78.	2-Chlorophenol	95-57-8	ND
79.	3-Chloropropionitrile	542-76-7	NA
80.	Chrysene	218-01-9	ND
81.	o-Cresol	95-48-7	NA
82.	p-Cresol	106-44-5	NA
232.	Cyclohexanone	108-94-1	NA
83.	Dibenz(a,h)anthracene	53-70-3	ND
84.	Dibenzo(a,e)pyrene	192-65-4	NA
85.	Dibenzo(a,i)pyrene	189-55-9	NA
86.	1,3-Dichlorobenzene	541-73-1	ND
87.	1,2-Dichlorobenzene	95-50-1	ND
88.	1,4-Dichlorobenzene	106-46-7	ND
89.	3,3'-Dichlorobenzidine	91-94-1	ND
90.	2,4-Dichlorophenol	120-83-2	ND
91.	2,6-Dichlorophenol	87-65-0	NA
92.	Diethyl phthalate	84-66-2	ND
93.	3,3'-Dimethoxybenzidine	119-90-4	NA
94.	p-Dimethylaminoazobenzene	60-11-7	NA
95.	3,3'-Dimethylbenzidine	119-93-7	NA
96.	2,4-Dimethylphenol	105-67-9	ND
97.	Dimethyl phthalate	131-11-3	ND
98.	Di-n-butyl phthalate	84-74-2	ND
99.	1,4-Dinitrobenzene	100-25-4	NA
100.	4,6-Dinitro-o-cresol	534-52-1	NA
101.	2,4-Dinitrophenol	51-28-5	ND
102.	2,4-Dinitrotoluene	121-14-2	ND
103.	2,6-Dinitrotoluene	606-20-2	ND
104.	Di-n-octyl phthalate	117-84-0	ND
105.	Di-n-propylnitrosamine	621-64-7	NA
106.	Diphenylamine	122-39-4	NA
219.	Diphenylnitrosamine	86-30-6	NA

Table 5-1 (continued)

BDAT reference no.	Parameter	CAS no.	Detection status
Semivolatiles (continued)			
107.	1,2-Diphenylhydrazine	122-66-7	NA
108.	Fluoranthene	206-44-0	ND
109.	Fluorene	86-73-7	ND
110.	Hexachlorobenzene	118-74-1	ND
111.	Hexachlorobutadiene	87-68-3	ND
112.	Hexachlorocyclopentadiene	77-47-4	ND
113.	Hexachloroethane	67-72-1	ND
114.	Hexachlorophene	70-30-4	NA
115.	Hexachloropropene	1888-71-7	NA
116.	Indeno(1,2,3-cd)pyrene	193-39-5	ND
117.	Isosafrole	120-58-1	NA
118.	Methapyrilene	91-80-5	NA
119.	3-Methylcholanthrene	56-49-5	NA
120.	4,4'-Methylenebis (2-chloroaniline)	101-14-4	NA
36.	Methyl methanesulfonate	66-27-3	NA
121.	Naphthalene	91-20-3	ND
122.	1,4-Naphthoquinone	130-15-4	NA
123.	1-Naphthylamine	134-32-7	NA
124.	2-Naphthylamine	91-59-8	NA
125.	p-Nitroaniline	100-01-6	ND
126.	Nitrobenzene	98-95-3	ND
127.	4-Nitrophenol	100-02-7	ND
128.	N-Nitrosodi-n-butylamine	924-16-3	NA
129.	N-Nitrosodiethylamine	55-18-5	NA
130.	N-Nitrosodimethylamine	62-75-9	NA
131.	N-Nitrosomethylethylamine	10595-95-6	NA
132.	N-Nitrosomorpholine	59-89-2	NA
133.	N-Nitrosopiperidine	100-75-4	NA
134.	N-Nitrosopyrrolidine	930-55-2	NA
135.	5-Nitro-o-toluidine	99-65-8	NA
136.	Pentachlorobenzene	608-93-5	NA
137.	Pentachloroethane	76-01-7	NA
138.	Pentachloronitrobenzene	82-68-8	NA
139.	Pentachlorophenol	87-86-5	ND
140.	Phenacetin	62-44-2	NA
141.	Phenanthrene	85-01-8	ND
142.	Phenol	108-95-2	ND
220.	Phthalic anhydride	85-44-9	NA
143.	2-Picoline	109-06-8	NA
144.	Pronamide	23950-58-5	NA
145.	Pyrene	129-00-0	ND
146.	Resorcinol	108-46-3	NA

Table 5-1 (continued)

BDAT reference no.	Parameter	CAS no.	Detection status
Semivolatiles (continued)			
147.	Safrole	94-59-7	NA
148.	1,2,4,5-Tetrachlorobenzene	95-94-3	NA
149.	2,3,4,6-Tetrachlorophenol	58-90-2	NA
150.	1,2,4-Trichlorobenzene	120-82-1	ND
151.	2,4,5-Trichlorophenol	95-95-4	ND
152.	2,4,6-Trichlorophenol	88-06-2	ND
153.	Tris(2,3-dibromopropyl) phosphate	126-72-7	NA
Metals			
154.	Antimony	7440-36-0	ND
155.	Arsenic	7440-38-2	ND
156.	Barium	7440-39-3	D
157.	Beryllium	7440-41-7	ND
158.	Cadmium	7440-43-9	D (TCLP only)
159.	Chromium (total)	7440-47-32	ND
221.	Chromium (hexavalent)	-	NA
160.	Copper	7440-50-8	D
161.	Lead	7439-92-1	ND
162.	Mercury	7439-97-6	D
163.	Nickel	7440-02-0	D
164.	Selenium	7782-49-2	ND
165.	Silver	7440-22-4	D (TCLP only)
166.	Thallium	7440-28-0	D
167.	Vanadium	7440-62-2	ND
168.	Zinc	7440-66-6	D
Inorganics			
169.	Cyanide	57-12-5	NA
170.	Fluoride	16964-48-8	NA
171.	Sulfide	8496-25-8	NA
Organochlorine Pesticides			
172.	Aldrin	309-00-2	NA
173.	alpha-BHC	319-84-6	NA
174.	beta-BHC	319-85-7	NA
175.	delta-BHC	319-86-8	NA

Table 5-1 (continued)

BDAT reference no.	Parameter	CAS no.	Detection status
Organochlorine Pesticides (continued)			
176.	gamma-BHC	58-89-9	NA
177.	Chlordane	57-74-9	NA
178.	DDD	72-54-8	NA
179.	DDE	72-55-9	NA
180.	DDT	50-29-3	NA
181.	Dieldrin	60-57-1	NA
182.	Endosulfan I	939-98-8	NA
183.	Endosulfan II	33213-6-5	NA
184.	Endrin	72-20-8	NA
185.	Endrin aldehyde	7421-93-4	NA
186.	Heptachlor	76-44-8	NA
187.	Heptachlor epoxide	1024-57-3	NA
188.	Isodrin	465-73-6	NA
189.	Kepone	143-50-0	NA
190.	Methoxychlor	72-43-5	NA
191.	Toxaphene	8001-35-2	NA
Phenoxyacetic Acid Herbicides			
192.	2,4-Dichlorophenoxyacetic acid	94-75-7	NA
193.	Silvex	93-72-1	NA
194.	2,4,5-T	93-76-5	NA
Organophosphorous Insecticides			
195.	Disulfoton	298-04-4	NA
196.	Famphur	52-85-7	NA
197.	Methyl parathion	298-00-0	NA
198.	Parathion	56-38-2	NA
199.	Phorate	298-02-2	NA
PCBs			
200.	Aroclor 1016	12674-11-2	NA
201.	Aroclor 1221	11104-28-2	NA
202.	Aroclor 1232	11141-16-5	NA
203.	Aroclor 1242	53469-21-9	NA
204.	Aroclor 1248	12672-29-6	NA
205.	Aroclor 1254	11097-69-1	NA
206.	Aroclor 1260	11096-82-5	NA

Table 5-1 (continued)

BDAT reference no.	Parameter	CAS no.	Detection status
Dioxins and Furans			
207.	Hexachlorodibenzo-p-dioxins	-	NA
208.	Hexachlorodibenzofurans	-	NA
209.	Pentachlorodibenzo-p-dioxins	-	NA
210.	Pentachlorodibenzofurans	-	NA
211.	Tetrachlorodibenzo-p-dioxins	-	NA
212.	Tetrachlorodibenzofurans	-	NA
213.	,3,7,8-Tetrachlorodibenzo-p-dioxin	1746-01-6	NA

D = Detected.
ND = Not detected.
NA = Not analyzed.

6. CALCULATION OF TREATMENT STANDARDS

In this section, the performance level of the best technology for treatment of K071 waste is calculated. For nonwastewater, this calculation is based on the set of treatment data presented in Table 4-1 for a treatment system consisting of acid leaching followed by chemical oxidation followed by dewatering/acid washing. For wastewater, this calculation is based on the treatment data presented in Table 4-2, for a treatment system consisting of sulfide precipitation followed by filtration. In Section 5, mercury was selected as the regulated constituent for this waste for both nonwastewater and wastewater.

EPA has data from four facilities for the treatment of K071 nonwastewater. These data include seven sets of influent and effluent data collected from one facility using acid leaching followed by chemical oxidation followed by dewatering/acid washing, and one set collected from the same facility for a one-step acid leaching treatment. Seven of these eight data sets for acid leaching are used for regulation of this waste. The data on the one-step acid leaching process were not used because the ANOVA analysis showed that significant reduction in the concentration of hazardous constituents was not achieved by this treatment process. Three facilities submitted data for dewatering/water washing treatment. One of these three facilities submitted 12 data sets (total waste concentration and EP leachate analyses) for only the treated waste, along with two data points for TCLP leachate from the treated waste. The second of the three facilities submitted 24 data sets (total waste concentration and EP leachate analyses) for only the treated waste. The third plant submitted

232 data values for EP leachate analysis of only the treated waste. The first two of these facilities also submitted QA/QC data on matrix spike recoveries for all metals analyses.

EPA also collected three sets of untreated and treated waste data from one facility for the treatment of K071 wastewater. All three of these data sets are used for regulation of this waste. No data were submitted by industry for the treatment of K071 wastewater.

As discussed in Section 4, the technology upon which the treatment standard for K071 nonwastewater is based is acid leaching followed by chemical oxidation followed by dewatering/acid washing. The technology upon which the treatment standard for K071 wastewater is based is sulfide precipitation and filtration. Available data show that the treatment systems on which the treatment standards are based were well designed and well operated at the time of treatment data collection.

As discussed in Section 1, the following steps were taken to derive the BDAT treatment standards for K071.

1. The Agency evaluated the data collected from the acid leaching and sulfide precipitation treatment systems to determine whether any of the data represented poor design or poor operation of the treatment systems. The available data show that all seven data sets collected from Agency testing for nonwastewater and all three data sets collected from Agency testing for wastewater do not represent poor design or poor operation. One data value from Agency testing, for TCLP analysis for mercury in the treated nonwastewater in sample set 3, was not used because the value for leachate analysis was higher than the corresponding value for total waste concentration.

2. Accuracy-corrected constituent concentrations were calculated for all BDAT list constituents for both wastewater and nonwastewater. An arithmetic average concentration level and a variability factor were determined for each BDAT list constituent regulated in this waste, as shown in Table 6-1.

3. The analysis of variance method was used to compare the treatment of K071 waste in the acid leaching treatment system to treatment in a dewatering/water washing treatment system. All of the data submitted by industry for dewatering/water washing treatment were found by the analysis of variance method to represent significantly worse treatment than treatment by acid leaching for both compositional and leachate analyses.

4. The BDAT treatment standard for each constituent regulated in this rulemaking was determined by multiplying the average accuracy-corrected total composition or TCLP extract concentration by the appropriate variability factor.

Table 6-1 summarizes the calculation of the treatment standards for K071. EPA believes these constituent reductions substantially diminish the toxicity of K071 and substantially reduce the likelihood of migration of the hazardous constituents present in K071.

Table 6-1 Calculation of Treatment Standards for K071 - Acid Leaching, EPA-Collected Data

Constituent	Sample Set #1	Sample Set #2	Sample Set #3	Sample Set #4	Sample Set #5	Sample Set #6	Sample Set #7	Average Corrected Treated Waste Concentration	Variability Factor	Treatment Concentration Level Avg x VF	Untreated K071 Range	Treatment Standard
Wastewater												
Mercury (mg/l)	0.0295	-	0.0284	-	-	0.0295	-	0.0288	1.05	0.030	-	0.030
Nonwastewater[a]												
Mercury (Total concentration) (mg/kg)	2.16	3.84	1.44	1.36	0.96	1.44	1.36	1.79	2.57	4 6	17.0-22.1[b]	4.6
(TLCP) (mg/l)	0.0003	<0.0002	-	0.0002	0.0005	0.0017	<0.0002	0.00052	4.82	0 0025	0.46-20	0.0025

[a] Facilities land-disposing of K071 nonwastewater must comply with both the total concentration and the TCLP standards.

[b] Units are mg/l.

7. CONCLUSIONS

The Agency has proposed treatment standards for the listed waste K071. Standards for nonwastewater and wastewater forms of this waste are presented in Table 7-1.

The treatment standards proposed for K071 have been developed consistent with EPA's promulgated methodology for BDAT (November 7, 1986, 51 FR 40572). This waste is generated by brine purification in the mercury cell process in chlorine production. Based on a careful review of the industry processes that generate this waste and all available data characterizing this waste, the Agency has determined that this waste represents a separate waste treatability group.

Through available data bases, EPA's technology testing program, and data submitted by industry, the Agency has identified the following three demonstrated technologies for treatment of inorganic constituents present in the K071 nonwastewater: (1) treatment train consisting of acid leaching, chemical oxidation, and dewatering/acid washing treatment steps, (2) dewatering/water washing, and (3) stabilization. For K071 wastewater, only one demonstrated treatment technology was identified, consisting of chemical precipitation followed by filtration.

Regulated constituents were selected based on a careful evaluation of the constituents found at treatable levels in the untreated waste and constituents detected in the treated waste. All available waste characterization data and applicable treatment data consistent with the type and quality of data needed by the Agency on this program were used to make this determination. If the performance data for the technology

Table 7-1 BDAT Treatment Standards for K071

Constituent	Value
Mercury	
Wastewater (total concentration)	0.030 mg/l
Nonwastewater (total concentration)	4.7 mg/kg[a]
Nonwastewater (TCLP)	0.0025 mg/l[a]

[a] Facilities land-disposing of K071 nonwastewater must meet both the total waste concentration and the TCLP standards.

selected as BDAT indicated that a constituent was not treated, then that constituent was not regulated. Some constituents present at treatable concentrations in the untreated waste were not regulated if it was determined that they would be adequately controlled by regulation of another constituent.

In the development of treatment standards for these wastes, the Agency examined all available treatment data. The Agency conducted tests on a full scale treatment system treating K071 waste, consisting of acid leaching followed by chemical oxidation followed by dewatering/acid washing followed by sulfide precipitation and filtration treatment of the wastewater produced in the dewatering/washing step. Design and operating data collected during the testing of this technology indicate that the technology was properly operated during collection of each sample set; accordingly, all of the treatment performance data collected during the tests were used in the development of the BDAT treatment standards except for one data point for TCLP analysis for mercury, which, because of laboratory error, was higher than the corresponding total waste concentration analysis. Additionally, the Agency considered performance data for K071 nonwastewater submitted by industry for dewatering/water washing.

Acid leaching followed by chemical oxidation followed by dewatering/ acid washing was determined to be BDAT for K071 nonwastewaters based on a statistical comparison of performance data from this treatment train to the other available treatment data. Other available treatment data

either showed a lower level of performance than the acid leaching treatment system or there was insufficient information to allow the Agency to compare statistically the treatment performance (e.g., TCLP leachate data were not submitted for the dewatering/water washing treatment system except for two data points from one facility).

Chemical precipitation followed by filtration was determined to be BDAT for K071 wastewaters. The Agency collected three sets of untreated/treated data for this treatment system. No other data are available for treatment of K071 wastewaters for this or any other technologies.

Treatment standards for these wastes were derived after adjustment of laboratory data to account for recovery. Subsequently, the mean of the accuracy-corrected data was multiplied by a variability factor determined for each constituent to derive the treatment standard. The variability factor represents the variability inherent in the treatment process and in sampling and analytical methods. Variability factors were determined by statistically calculating the variability seen for a number of data points for a given constituent.

Wastes determined to be K071 may be land disposed if they meet the treatment standards specified in Table 7-1 at the point of disposal. The BDAT technology upon which the treatment standards are based (acid leaching followed by chemical oxidation followed by dewatering/acid washing or precipitation followed by filtration) need not be specifically utilized prior to land disposal, provided that the alternative treatment

technology utilized achieves the standards and does not pose a greater risk to human health and the environment than land disposal.

These standards become effective as of August 8, 1988, as per the schedule set forth in 40 CFR 268.10. Due to the lack of nationwide capacity at this time for the acid leaching treatment system determined to be BDAT, the Agency has proposed to grant a 2-year nationwide variance to the effective date of the land disposal ban for K071. A detailed discussion of the Agency's determination that a lack of nationwide capacity for the acid leaching treatment train determined to be BDAT exists is presented in the Capacity Background Document, which is available in the Administrative Record for the First Sixths Rule.

Consistent with Executive Order 12291, EPA prepared a regulatory impact analysis (RIA) to assess the economic effect of compliance with this proposed rule. The RIA prepared for this proposed rule is available in the Administrative Record for the First Sixths Rule.

APPENDIX A

ANALYTICAL DATA SUBMITTED BY INDUSTRY FOR TREATMENT OF K071

Table A-1 Dewatering/Washing Data Submitted by Plant A

Sample Set #1[a]

ANALYTICAL DATA: BDAT Constituent	Treated residual concentration (Total composition) (mg/kg)	(EP Toxicity) (mg/l)	(TCLP) (mg/l)
Arsenic	3.7	<0.005	<0.005
Barium	34	0.4	<0.005
Cadmium	1.4	0.016	0.01
Chromium	13	<0.005	<0.005
Lead	42	0.08	0.09
Mercury	150	0.013	0.014
Nickel	11	0.06	<0.005
Silver	0.51	<0.005	<0.005

[a]Brine purification muds.

Reference: Occidental Chemical Corporation. 1987a.

Table A-2 Dewatering/Washing Data Submitted by Plant A

Sample Set #2[a]

ANALYTICAL DATA· BDAT Constituent	Treated residual concentration (Total composition) (mg/kg)	(EP Toxicity) (mg/l)
Arsenic	4.3	<0.005
Barium	37	0.33
Cadmium	1.3	0.009
Chromium	16	<0.005
Lead	48	0.06
Mercury	120	0.014
Nickel	12	0.05
Silver	0.58	<0.005

[a]Brine purification muds.

Reference: Occidental Chemical Corporation. 1987a.

Table A-3 Dewatering/Washing Data Submitted by Plant A

Sample Set #3[a]

ANALYTICAL DATA:	Treated residual concentration	
BDAT Constituent	(Total composition) (mg/kg)	(EP Toxicity) (mg/l)
Arsenic	0.82	<0.005
Barium	6.3	<0.30
Cadmium	1.1	0.008
Chromium	3.9	<0.005
Lead	10	0.06
Mercury	78	0.018
Nickel	2.0	0.06
Silver	0.89	<0.005

[a]Brine purification muds.

Reference: Occidental Chemical Corporation 1987a.

1558g

Table A-4 Dewatering/Washing Data Submitted by Plant A

Sample Set #4[a]

ANALYTICAL DATA:	Treated residual concentration	
BDAT Constituent	(Total composition) (mg/kg)	(EP Toxicity) (mg/l)
Arsenic	0.49	<0.005
Barium	3.9	0.30
Cadmium	3.4	0.009
Chromium	4.3	<0.005
Lead	4.9	<0.03
Mercury	60	0.013
Nickel	2.0	0.02
Silver	<0.5	<0.005

[a]Brine purification muds.

Reference. Occidental Chemical Corporation. 1987a.

Table A-5 Dewatering/Washing Data Submitted by Plant A

Sample Set #5[a]

ANALYTICAL DATA.	Treated residual concentration	
BDAT Constituent	(Total composition) (mg/kg)	(EP Toxicity) (mg/l)
Arsenic	1.1	<0.005
Barium	16	<0.30
Cadmium	3.0	0.009
Chromium	15	<0.005
Lead	25	0.31
Mercury	82	<0.024
Nickel	8.4	0.08
Silver	<0.5	<0.005

[a]Brine purification muds.

Reference: Occidental Chemical Corporation. 1987a.

Table A-6 Dewatering/Washing Data Submitted by Plant A

Sample Set #6[a]

ANALYTICAL DATA:	Treated residual concentration	
BDAT Constituent	(Total composition) (mg/kg)	(EP Toxicity) (mg/l)
Arsenic	1.4	<0.005
Barium	15	<0.30
Cadmium	2.0	<0.006
hromium	26	0.11
Lead	32	0.07
Mercury	95	0.021
Nickel	12	0.06
Silver	<0.5	<0.005

[a]Brine purification muds.

Reference: Occidental Chemical Corporation. 1987a.

Table A-7 Filtration/Washing Data Submitted by Plant A

Sample Set #7[b]

ANALYTICAL DATA.	Treated residual concentration	
BDAT Constituent	(Total composition) (mg/kg)	(EP Toxicity) (mg/l)
Arsenic	7.7	<0.005
Barium	200	0.52
Cadmium	5.2	0.012
Chromium	700	0.010
Lead	38	0.09
Mercury	240	0.011
Selenium	4.7	<0.005
Silver	100	0.40

[b]Saturator insolubles

Reference. Occidental Chemical Corporation. 1987a.

Table A-8 Filtration/Washing Data Submitted by Plant A

Sample Set #8[b]

ANALYTICAL DATA. BDAT Constituent	Treated residual concentration (Total composition) (mg/kg)	(EP Toxicity) (mg/l)
Arsenic	7.5	<0.005
Barium	67	<0.30
Cadmium	3.5	0.012
Chromium	430	0.019
Lead	42	0.08
Mercury	92	0.003
Selenium	0.80	<0.005
Silver	44	0.12

[b]Saturator insolubles.

Reference: Occidental Chemical Corporation. 1987a.

Table A-9 Filtration/Washing Data Submitted by Plant A

Sample Set #9[b]

ANALYTICAL DATA:	Treated residual concentration	
BDAT Constituent	(Total composition) (mg/kg)	(EP Toxicity) (mg/l)
Arsenic	25	<0.005
Barium	71	<0.30
Cadmium	3.9	0.009
Chromium	390	<0.005
Lead	62	0.11
Mercury	78	<0.0005
Selenium	<0.5	<0.005
Silver	56	1.2

[b]Saturator insolubles.

Reference: Occidental Chemical Corporation. 1987a.

Table A-10 Filtration/Washing Data Submitted by Plant A

Sample Set #10[b]

ANALYTICAL DATA: BDAT Constituent	Treated residual concentration (Total composition) (mg/kg)	Treated residual concentration (EP Toxicity) (mg/l)
Arsenic	6.8	<0.005
Barium	110	<0.30
Cadmium	1.3	<0.006
Chromium	760	0.018
Lead	110	0.08
Mercury	72	0.0082
Selenium	<0.5	<0.005
Silver	260	0.44

[b]Saturator insolubles.

Reference: Occidental Chemical Corporation. 1987a.

Table A-11 Filtration/Washing Data Submitted by Plant A

Sample Set #11[b]

ANALYTICAL DATA	Treated residual concentration	
BDAT Constituent	(Total composition) (mg/kg)	(EP Toxicity) (mg/l)
Arsenic	53	<0.005
Barium	57	<0.30
Cadmium	<0.5	<0.006
Chromium	590	<0.001
Lead	41	0.10
Mercury	53	<0.005
Selenium	<0.5	<0.005
Silver	50	0.10

[b]Saturator insolubles.

Reference. Occidental Chemical Corporation. 1987a.

Table A-12 Filtration/Washing Data Submitted by Plant A

Sample Set #12[b]

ANALYTICAL DATA:	Treated residual concentration		
BDAT Constituent	(Total composition) (mg/kg)	(EP Toxicity) (mg/l)	(TCLP) (mg/l)
Arsenic	5.0	<0.005	<0.005
Barium	120	<0.30	0.40
Cadmium	0.53	0.014	0.017
Chromium	820	<0.005	<0.005
Lead	30	0.10	0.06
Mercury	150	<0.0005	<0.0005
Selenium	<0.5	<0.005	<0.005
Silver	48	0.23	0.08

[b]Saturator insolubles.

Reference: Occidental Chemical Corporation. 1987a.

Table A-13 Dewatering/Washing Data Submitted by Plant B

Sample Set #1[a]

ANALYTICAL DATA. BDAT Constituent	Treated residual concentration (Total composition) (mg/kg)	(EP Toxicity) (mg/l)
Arsenic	0.46	<0.005
Barium	35	0.11
Cadmium	0.92	<0.008
Chromium	7.5	<0.005
Lead	82	0.10
Mercury	5.7	<0.002
Silver	14	0.10

[a]Brine purification muds.

Reference: Occidental Chemical Corporation. 1987b

Table A-14 Dewatering/Washing Data Submitted by Plant B

Sample Set #2[a]

ANALYTICAL DATA. BDAT Constituent	Treated residual concentration (Total composition) (mg/kg)	(EP Toxicity) (mg/l)
Arsenic	0.73	<0.005
Barium	45	0.19
Cadmium	<0.73	<0.008
Chromium	6.7	<0.005
Lead	86	0.11
Mercury	6.2	<0.002
Silver	11	0.12

[a]Brine purification muds.

Reference. Occidental Chemical Corporation. 1987b

Table A-15 Dewatering/Washing Data Submitted by Plant B

Sample Set #3[a]

ANALYTICAL DATA BDAT Constituent	Treated residual concentration (Total composition) (mg/kg)	 (EP Toxicity) (mg/l)
Arsenic	<0.52	<0.005
Barium	86	0.24
Cadmium	<0.73	<0.008
Chromium	6.6	<0.005
Lead	97	0.12
Mercury	6.5	<0.005
Silver	13	0.15

[a]Brine purification muds.

Reference: Occidental Chemical Corporation. 1987b

Table A-16 Dewatering/Washing Data Submitted by Plant B

Sample Set #4[a]

ANALYTICAL DATA: BDAT Constituent	Treated residual concentration (Total composition) (mg/kg)	Treated residual concentration (EP Toxicity) (mg/l)
Arsenic	0.70	<0.005
Barium	81	<0.20
Cadmium	0.71	<0.008
Chromium	6.3	<0.006
Lead	89	0.14
Mercury	5.9	<0.005
Silver	12	0.13

[a]Brine purification muds.

Reference Occidental Chemical Corporation. 1987b

Table A-17 Filtration/Washing Data Submitted by Plant B

Sample Set #5[a]

ANALYTICAL DATA. BDAT Constituent	Treated residual concentration (Total composition) (mg/kg)	(EP Toxicity) (mg/l)
Arsenic	0.63	<0.005
Barium	15	0.05
Cadmium	<0.63	<0.008
Chromium	7.0	<0.005
Lead	41	0.12
Mercury	3.9	<0.005
Silver	4.4	<0.07

[a]Brine purification muds.

Reference: Occidental Chemical Corporation. 1987b.

Table A-18 Filtration/Washing Data Submitted by Plant B

Sample Set #6[a]

ANALYTICAL DATA.	Treated residual concentration	
BDAT Constituent	(Total composition) (mg/kg)	(EP Toxicity) (mg/l)
Arsenic	0.54	<0.005
Barium	97	0.02
Cadmium	<0.76	<0.008
Chromium	6.8	<0.005
Lead	86	0.10
Mercury	3.3	<0.005
Silver	11	0.12

[a]Brine purification muds.

Reference: Occidental Chemical Corporation. 1987b.

Table A-19 Filtration/Washing Data Submitted by Plant B

Sample Set #7[a]

ANALYTICAL DATA.	Treated residual concentration	
BDAT Constituent	(Total composition) (mg/kg)	(EP Toxicity) (mg/l)
Arsenic	<0.58	<0.005
Barium	180	0.30
Cadmium	<0.81	<0.008
Chromium	7.6	0.006
Lead	110	0.10
Mercury	4.2	<0.005
Silver	13	0.17

[a]Brine purification muds.

Reference: Occidental Chemical Corporation. 1987b.

Table A-20 Filtration/Washing Data Submitted by Plant B

Sample Set #8[a]

ANALYTICAL DATA:	Treated residual concentration	
BDAT Constituent	(Total composition) (mg/kg)	(EP Toxicity) (mg/l)
Arsenic	0.61	<0.005
Barium	82	0.43
Cadmium	<0.71	<0.008
Chromium	6.8	<0.005
Lead	72	0.06
Mercury	4.9	<0.005
Silver	7.1	0.09

[a]Brine purification muds.

Reference: Occidental Chemical Corporation. 1987b.

Table A-21 Filtration/Washing Data Submitted by Plant B

Sample Set #9[a]

ANALYTICAL DATA: BDAT Constituent	Treated residual concentration (Total composition) (mg/kg)	Treated residual concentration (EP Toxicity) (mg/l)
Arsenic	<0.40	<0.005
Barium	33	<0.02
Cadmium	0.78	<0.008
Chromium	6.5	<0.005
Lead	96	0.10
Mercury	4.2	<0.005
Silver	19	0.19

[a]Brine purification muds.

Reference: Occidental Chemical Corporation. 1987b.

Table A-22 Filtration/Washing Data Submitted by Plant B

Sample Set #10[a]

ANALYTICAL DATA.	Treated residual concentration	
BDAT Constituent	(Total composition) (mg/kg)	(EP Toxicity) (mg/l)
Arsenic	0.96	<0.005
Barium	39	<0.02
Cadmium	0.74	<0.008
Chromium	6.6	<0.005
Lead	110	0.10
Mercury	3.6	<0.005
Silver	21	0.28

[a]Brine purification muds.

Reference: Occidental Chemical Corporation. 1987b.

Table A-23 Filtration/Washing Data Submitted by Plant B

Sample Set #11[a]

ANALYTICAL DATA: BDAT Constituent	Treated residual concentration (Total composition) (mg/kg)	(EP Toxicity) (mg/l)
Arsenic	0.89	<0.005
Barium	29	<0.02
Cadmium	1.3	<0.008
Chromium	6.7	<0.005
Lead	85	0.11
Mercury	4.0	<0.005
Silver	15	0.12

[a]Brine purification muds.

Reference: Occidental Chemical Corporation. 1987b.

Table A-24 Filtration/Washing Data Submitted by Plant B

Sample Set #12[a]

ANALYTICAL DATA	Treated residual concentration	
BDAT Constituent	(Total composition) (mg/kg)	(EP Toxicity) (mg/l)
Arsenic	1.1	<0.005
Barium	22	0.11
Cadmium	0.84	<0.008
Chromium	6.6	<0.005
Lead	94	0.09
Mercury	2.9	<0.005
Silver	16	0.19

[a]Brine purification muds.

Reference: Occidental Chemical Corporation. 1987b.

Table A-25 Filtration/Washing Data Submitted by Plant B

Sample Set #13[a]

ANALYTICAL DATA: BDAT Constituent	Treated residual concentration (Total composition) (mg/kg)	Treated residual concentration (EP Toxicity) (mg/l)
Arsenic	6.0	<0.005
Barium	70	0.05
Cadmium	<0.63	<0.008
Chromium	17	<0.005
Lead	330	0.35
Mercury	3.5	0.0080
Silver	92	0.66

[a]Brine purification muds.

Reference: Occidental Chemical Corporation. 1987b.

Table A-26 Filtration/Washing Data Submitted by Plant B

Sample Set #14[a]

ANALYTICAL DATA:	Treated residual concentration	
BDAT Constituent	(Total composition) (mg/kg)	(EP Toxicity) (mg/l)
Arsenic	7.7	<0.005
Barium	56	0.11
Cadmium	<0.71	<0.008
Chromium	16	<0.005
Lead	340	0.77
Mercury	3.7	0.0063
Silver	76	0.63

[a]Brine purification muds.

Reference: Occidental Chemical Corporation. 1987b.

Table A-27 Filtration/Washing Data Submitted by Plant B

Sample Set #15[a]

ANALYTICAL DATA:	Treated residual concentration	
BDAT Constituent	(Total composition) (mg/kg)	(EP Toxicity) (mg/l)
Arsenic	15	<0.005
Barium	60	0.27
Cadmium	<0.78	<0.008
Chromium	17	<0.005
Lead	340	0.40
Mercury	4.8	0.032
Silver	81	0.79

[a]Brine purification muds.

Reference. Occidental Chemical Corporation. 1987b.

Table A-28 Filtration/Washing Data Submitted by Plant B

Sample Set #16[a]

ANALYTICAL DATA:	Treated residual concentration	
BDAT Constituent	(Total composition) (mg/kg)	(EP Toxicity) (mg/l)
Arsenic	<0.51	<0.005
Barium	24	0.21
Cadmium	<0.71	<0.008
Chromium	11	<0.005
Lead	170	0.08
Mercury	2.3	0.0080
Selenium	1.6	<0.005
Silver	69	0.22

[a]Brine purification muds.

Reference: Occidental Chemical Corporation. 1987b.

Table A-29 Filtration/Washing Data Submitted by Plant B

Sample Set #17[a]

ANALYTICAL DATA	Treated residual concentration	
BDAT Constituent	(Total composition) (mg/kg)	(EP Toxicity) (mg/l)
Arsenic	2.5	<0.005
Barium	7.9	0.11
Cadmium	<0 69	<0.008
Chromium	5.7	<0.005
Lead	100	0.11
Mercury	6.9	<0.002
Silver	30	0.14

[a]Brine purification muds.

Reference: Occidental Chemical Corporation. 1987b.

Table A-30 Filtration/Washing Data Submitted by Plant B

Sample Set #18[a]

ANALYTICAL DATA	Treated residual concentration	
BDAT Constituent	(Total composition) (mg/kg)	(EP Toxicity) (mg/l)
Arsenic	7.3	<0.005
Barium	42	<0.04
Cadmium	<0.77	<0.008
Chromium	16	<0.005
Lead	200	0.10
Mercury	11	0.0093
Silver	95	0.16

[a]Brine purification muds.

Reference. Occidental Chemical Corporation. 1987b.

Table A-31 Filtration/Washing Data Submitted by Plant B

Sample Set #19[a]

ANALYTICAL DATA: BDAT Constituent	Treated residual concentration (Total composition) (mg/kg)	Treated residual concentration (EP Toxicity) (mg/l)
Arsenic	6.1	<0.005
Barium	98	<0.02
Cadmium	<0.70	<0.008
Chromium	19	<0.005
Lead	310	0.36
Mercury	2.0	0.013
Silver	77	0.46

[a]Brine purification muds.

Reference: Occidental Chemical Corporation. 1987b.

Table A-32 Filtration/Washing Data Submitted by Plant B

Sample Set #20[a]

ANALYTICAL DATA: BDAT Constituent	Treated residual concentration (Total composition) (mg/kg)	Treated residual concentration (EP Toxicity) (mg/l)
Arsenic	7.9	<0.005
Barium	79	0.38
Cadmium	<0 70	<0.008
Chromium	20	<0.005
Lead	430	0.33
Mercury	9.6	0.014
Silver	220	1.22

[a]Brine purification muds.

Reference: Occidental Chemical Corporation. 1987b.

Table A-33 Filtration/Washing Data Submitted by Plant B

Sample Set #21[b]

ANALYTICAL DATA.	Treated residual concentration	
BDAT Constituent	(Total composition) (mg/kg)	(EP Toxicity) (mg/l)
Arsenic	<0.6	<0.005
Barium	<3.0	<0.03
Cadmium	0.73	<0.005
Chromium	0.10	0.007
Lead	79	0.15
Mercury	5.5	0.0008
Silver	1.3	<0.005

[b]Saturator insolubles.

Reference: Occidental Chemical Corporation. 1987b.

Table A-34 Filtration/Washing Data Submitted by Plant B

Sample Set #22[b]

ANALYTICAL DATA:	Treated residual concentration	
BDAT Constituent	(Total composition) (mg/kg)	(EP Toxicity) (mg/l)
Arsenic	<0.6	<0.005
Barium	<3.0	<0.03
Cadmium	<0.70	0.005
Chromium	0.78	<0.005
Lead	42	0.17
Mercury	1.8	<0.0005
Silver	<0.6	<0.005

[b]Saturator insolubles.

Reference: Occidental Chemical Corporation. 1987b.

Table A-35 Filtration/Washing Data Submitted by Plant B

Sample Set #23[b]

ANALYTICAL DATA.	Treated residual concentration	
BDAT Constituent	(Total composition) (mg/kg)	(EP Toxicity) (mg/l)
Arsenic	<0.6	<0.005
Barium	<3 0	<0.03
Cadmium	0.73	<0.005
Chromium	0.62	0.007
Lead	34	0.11
Mercury	3.0	<0.0005
Nickel	6.2	<0.03
Silver	0 83	<0.005

[b]Saturator insolubles.

Reference: Occidental Chemical Corporation. 1987b.

Table A-36 Filtration/Washing Data Submitted by Plant B

Sample Set #24[b]

ANALYTICAL DATA	Treated residual concentration	
BDAT Constituent	(Total composition) (mg/kg)	(EP Toxicity) (mg/l)
Arsenic	<0.6	<0.005
Barium	50	0.06
Cadmium	0.50	<0.005
Chromium	0.10	0.006
Lead	42	0.12
Mercury	3.4	<0.0005
Nickel	3.0	<0.03
Silver	<0.6	<0.005

[b]Saturator insolubles.

Reference: Occidental Chemical Corporation. 1987b.

Table A-37 Dewatering/Washing Data Submitted by Plant C

ANALYTICAL DATA:

Quarter	EP Toxicity - Mercury
3rd '87	0.013
	0.005
	0.017
	0.020
	0.048
	0.070
	0.002
	0.008
	0.013
2nd '87	0.010
	0.009
	0.004
	<0.002
	0.008
	0.004
	0.003
	0.012
	0.007
	0.011
	0.006
	0.001
	0.009
	0.002
	0.001
	0.003
	0.004
	<0.001
	0.009
	0.003
	0.015
	0.006
	0.009
	0.008
	0.005
	0.011
	0.014
	0.010
	0.002
	0.005
	0.012
	0.002

Table A-37 (continued)

ANALYTICAL DATA:

Quarter	EP Toxicity - Mercury
	0.010
	<0.001
	0.010
	<0.001
	0.001
	<0.001
	0.002
	0.004
	0.003
	0.022
	0.006
	0.005
1st '87	0.015
	0.030
	0.013
	0.018
	0.024
	0.010
	<0.001
	0.012
	0.017
	0.009
	0.006
	0.001
	0.001
	0.011
	0.012
	0.007
	0.006
	0.016
	0.040
	0.010
	0.016
	0.040
	0.024
	0.021
	0.010
	0.013
	<0.001
	0.014
	0.012

Table A-37 (continued)

ANALYTICAL DATA:

Quarter	EP Toxicity - Mercury
	0.027
	0.020
	0.010
	0.023
	0.046
	0.005
	0.025
	0.036
	0.024
4th '86	0.009
	0.012
	0.030
	0.039
	0.036
	0.033
	0.049
	0.035
	0.037
	0.030
	0.009
	0.006
	0.009
	0.006
	0.016
	0.009
	0.014
	0.010
	0.008
	0.007
	0.006
	0.006
	<0.001
	0.003
	0.009
	0.021
	0.006
	0.027
	0.035
	0.028
	0.029
3rd '86	0.034

Table A-37 (continued)

ANALYTICAL DATA:

Quarter	EP Toxicity - Mercury
	<0.001
	0.013
	0.007
	0.014
	0.056
	0.037
	0.026
	0.016
	0.023
	0.037
	0.037
	0.039
	0.001
	0.039
	0.002
	0.041
	0.072
	0.005
	0.107
	0.036
	0.008
	0.039
2nd '86	0.014
	0.005
	0.034
	0.004
	0.002
	0.004
	0.008
	0.066
	0.001
	0.004
	<0.001
	0.002
	0.007
	0.005
	0.018
	0.022
	0.031
	0.014
	0.091

Table A-37 (continued)

ANALYTICAL DATA:

Quarter	EP Toxicity - Mercury
	0.037
	0.164
	0.005
	0.008
1st '86	0.004
	0.005
	0.091
	0.011
	0.038
	0.090
	0.065
	0.007
	0.012
	0.020
	0.016
	0.030
	0.114
	0.169
	0.051
	0.012
	0.045
	0.037
	0.027
	0.029
	0.055
	0.115
	0.041
	0.030
	0.033
	0.025
4th '85	0.022
	0.040
	0.001
	0.038
	0.016
	0.020
	0.021
	0.038
	0.039
	0.027
	0.023

Table A-37 (continued)

ANALYTICAL DATA:

Quarter	EP Toxicity - Mercury
	0.015
	0.026
	0.023
	0.029
	0.010
	0.023
	0.023
	0.027
	0.032
	0.028
	0.035
	0.027
	0.031
	0.064
	0.031
	0.022
	0.025
	0.035
	0.050
	0.031
	0.026
	0.042
	0.063
	0.044
	0.043
	0.053
	0.022
	0.017

Reference: B.L. Bennett. 1986.

APPENDIX B

ANALYTICAL QA/QC

APPENDIX B. ANALYTICAL QA/QC

The analytical methods used for analysis of the regulated constituents identified in Section 5 are listed in Table B-1. SW-846 methods (EPA's Test Methods for Evaluating Solid Waste; Physical/Chemical Methods, SW-846, Third Edition, November 1986) are used in most cases for determining total constituent concentrations. Leachate concentrations were determined using the Toxicity Characteristic Leaching Procedure (TCLP), published in 51 FR 40643, November 7, 1986.

SW-846 allows for the use of alternative or equivalent procedures or equipment; these are noted in Table B-2. These alternatives or equivalents included use of alternative sample preparation methods and/or use of different extraction techniques to reduce sample matrix interferences.

The accuracy determination for a constituent is based on the matrix spike recovery values. Tables B-3 and B-4 present the matrix spike recoveries for mercury for both total composition and TCLP analyses for K071 residuals for the EPA-collected data. Matrix spike recoveries for total composition, TCLP, and EP toxicity analyses for data submitted by Plants A and B are presented in Tables B-5 through B-8.

The accuracy correction factors for mercury for each treatment residual are summarized in Tables B-3 through B-8. The accuracy correction factors were determined in accordance with the general methodology presented in the Introduction. For example, for mercury,

Table B-1 Analytical Methods for Regulated Constituents

Regulated Constituent	Extraction Method	Analytical Method		Reference
TOTAL COMPOSITION				
Mercury	Specified in analytical method	Mercury in Liquid Waste (Manual Cold-Vapor Technique)	7470	1
	Specified in analytical method	Mercury in Solid or Semi-Solid Waste (Manual Cold-Vapor Technique)	7471	1
TCLP EXTRACT				
Mercury		Toxicity Characteristic Leaching Procedure (TCLP)	51 FR 40643	2
	Specified in analytical method	Mercury in Liquid Waste (Manual Cold-Vapor Technique)	7470	1

References:

1. Environmental Protection Agency. 1986b. Test Methods for Evaluating Solid Waste. Third Edition. U.S. EPA. Office of Solid Waste and Emergency Response. November 1986.

2. Environmental Protection Agency. 1986c. Hazardous Waste Management Systems; Land Disposal Restrictions; Final Rule; Appendix I to Part 268 - Toxicity Leaching Procedure (TCLP). Federal Register. Vol. 51, No. 216. November 7, 1986. pp. 40643-40654.

Table B-2 Specific Procedures or Equipment Used in Mercury Analysis When Alternatives or Equivalents are Allowed in the SW-846 Methods

Analysis Method		Equipment	Alternatives or Equivalents Allowed by SW-846 Method	Specific Procedures or Equipment Used
Mercury	7470 7471	Perkin Elmer 50A	• Operate equipment following instructions by instrument manufacturer.	• Equipment operated using procedures specified in Perkin Elmer 50A Instructions Manual.
			• Cold vapor apparatus as described in SW-846 or an equivalent apparatus may be used.	• Mercury was analyzed by cold vapor method using the apparatus as specified in SW-846, except that there was no scrubber.
			• Samples may be prepared using the water bath method or the autoclave method, both described in SW-846	• Samples were prepared using the water bath method.

Reference USEPA. 1988a Table 6-7

Table B-3 Matrix Spike Recoveries for Solid Waste Matrix - EPA-Collected Data

BDAT constituent	Original amount found (mg/kg)	Sample Result			Duplicate Result			Accuracy correction factor**
		Spike added (mg/kg)	Spike result (mg/kg)	Percent recovery*	Spike added (mg/kg)	Spike result (mg/kg)	Percent recovery*	
Mercury	1.1	2.0	3.6	125	2.0	3.7	130	1.0

NC = Not calculable.
*Percent Recovery = [(Spike Result - Original Amount)/Spike Added].
**Accuracy Correction Factor = 100/Percent Recovery (using the lowest percent recovery value).

Note: Matrix spike data obtained from untreated K071(b) waste (Sample Set #8).

Table B-4 Matrix Spike Recoveries for TCLP Extracts for Treated Waste - EPA-Collected Data

BDAT constituent	Original amount found (ug/l)	Sample Set #6			Sample Set #6 Duplicate			Accuracy correction factor**
		Spike added (ug/l)	Spike result (ug/l)	Percent recovery*	Spike added (ug/l)	Spike result (ug/l)	Percent recovery*	
Mercury	1.6	4.0	5.4	95	4.0	5.5	98	1.05

NC = Not calculable.
*Percent Recovery = [(Spike Result - Original Amount)/Spike Added].
**Accuracy Correction Factor = 100/Percent Recovery (using the lowest percent recovery value).

Reference: USEPA. 1988a. Table 6-16.

Table B-5 Matrix Spike Recoveries for Treated Residual - Plant A

BDAT constituent	Original amount found (mg/kg)	Sample Result			Accuracy correction factor**
		Spike added (mg/kg)	Spike result (mg/kg)	Percent recovery*	
Sample #3.					
Mercury	78	0.4	NR	106	1.0
Sample #8:					
Mercury	92	0.4	NR	88	1.14

NR = Not reported

*Percent Recovery = [(Spike Result - Original Amount)/Spike Added].

**Accuracy Correction Factor = 100/Percent Recovery (using the lowest percent recovery value).

Reference Occidental Chemical Corporation. 1987a.

Table B-6 Matrix Spike Recoveries for TCLP and EP Toxicity Extracts for Treated Waste - Plant A

BDAT constituent	Original amount found (ug/l)	Sample Result			Duplicate Result			Accuracy correction factor**
		Spike added (ug/l)	Spike result (ug/l)	Percent recovery*	Spike added (ug/l)	Spike result (ug/l)	Percent recovery*	
Sample #1 - EP Toxicity:								
Mercury	13	0.2	NR	124	0.4	NR	112	1 0
Sample #1 - TCLP:								
Mercury	14	0.2	NR	95	0.4	NR	97	1.05
Sample #2 - EP Toxicity:								
Mercury	14	0.2	NR	117	0.4	NR	121	1 0
Sample #3 - EP Toxicity:								
Mercury	18	0.2	NR	104	0.4	NR	115	1.0
Sample #4 - EP Toxicity:								
Mercury	13	0.2	NR	120	0.4	NR	112	1 0
Sample #5 - EP Toxicity								
Mercury	24	0.2	NR	81	0.4	NR	84	1.23
Sample #6 - EP Toxicity:								
Mercury	21	0.2	NR	94	0.4	NR	79	1.27
Sample #7 - EP Toxicity:								
Mercury	11	0.2	NR	76	0.4	NR	105	1 32
Sample #8 - EP Toxicity:								
Mercury	3.0	0.2	NR	105	0.4	NR	122	1.0
Sample #9 - EP Toxicity:								
Mercury	<0.5	0.2	NR	125	0.4	NR	119	1.0
Sample #10 - EP Toxicity:								
Mercury	8.2	0.2	NR	80	0.4	NR	90	1.25

Table B-6 (continued)

BDAT constituent	Original amount found (ug/l)	Sample Result: Spike added (ug/l)	Sample Result: Spike result (ug/l)	Sample Result: Percent recovery*	Duplicate Result: Spike added (ug/l)	Duplicate Result: Spike result (ug/l)	Duplicate Result: Percent recovery*	Accuracy correction factor**
Sample #11 - EP Toxicity:								
Mercury	0.7	0.2	NR	106	0 4	NR	98	1 02
Sample #12 - EP Toxicity:								
Mercury	<0.5	0.2	NR	99	0 4	NR	101	1 01
Sample #12 - TCLP:								
Mercury	<0.5	0.2	NR	90	0.4	NR	99	1 11

NR = Not reported.
*Percent Recovery = [(Spike Result - Original Amount)/Spike Added].
**Accuracy Correction Factor = 100/Percent Recovery (using the lowest percent recovery value).

Reference Occidental Chemical Corporation. 1987a

Table B-7 Matrix Spike Recoveries for Treated Residual - Plant B

BDAT constituent	Original amount found (mg/kg)	Sample Result			Accuracy correction factor**
		Spike added (mg/kg)	Spike result (mg/kg)	Percent recovery*	
Sample #11:					
Mercury	4 0	0.4	NR	83	1.20
Sample #19.					
Mercury	2.0	0.4	NR	99	1.01
Sample #22·					
Mercury	1 8	0.4	NR	99	1.01

NR = Not reported
*Percent Recovery = [(Spike Result - Original Amount)/Spike Added].
**Accuracy Correction Factor = 100/Percent Recovery (using the lowest percent recovery value).

Reference Occidental Chemical Corporation. 1987b

Table B-8 Matrix Spike Recoveries for EP Toxicity Extracts for Treated Waste - Plant B

BDAT constituent	Original amount found (ug/l)	Sample Result			Duplicate Result			Accuracy correction factor**
		Spike added (ug/l)	Spike result (ug/l)	Percent recovery*	Spike added (ug/l)	Spike result (ug/l)	Percent recovery*	
Sample Set #1								
Mercury	<2.0	0.2	NR	99	0.4	NR	93	1 08
Sample Set #2.								
Mercury	<2.0	0.2	NR	106	0.4	NR	93	1 08
Sample Set #3								
Mercury	<5.0	0.2	NR	96	0.4	NR	100	1 04
Sample Set #4								
Mercury	<5.0	0.2	NR	115	0.4	NR	98	1 02
Sample Set #5								
Mercury	<5.0	0.2	NR	112	0 4	NR	104	1 0
Sample Set #6								
Mercury	<5.0	0.2	NR	101	0.4	NR	102	1.0
Sample Set #7:								
Mercury	<5.0	0.2	NR	109	0.4	NR	103	1.0
Sample Set #8:								
Mercury	<5.0	0.2	NR	110	0.4	NR	101	1.0
Sample Set #9:								
Mercury	<5.0	0.2	NR	113	0.4	NR	101	1.0
Sample Set #10:								
Mercury	<5 0	0.2	NR	109	0.4	NR	103	1 0
Sample Set #11:								
Mercury	<5.0	0.2	NR	108	0.4	NR	101	1 0

Table B-8 (continued)

BDAT constituent	Original amount found (ug/l)	Sample Result: Spike added (ug/l)	Sample Result: Spike result (ug/l)	Sample Result: Percent recovery*	Duplicate Result: Spike added (ug/l)	Duplicate Result: Spike result (ug/l)	Duplicate Result: Percent recovery*	Accuracy correction factor**
Sample Set #12:								
Mercury	<5.0	0.2	NR	108	0.4	NR	102	1 0
Sample Set #13:								
Mercury	8.0	0.2	NR	93	0.4	NR	94	1 08
Sample Set #14:								
Mercury	6.3	0.2	NR	94	0.4	NR	97	1 06
Sample Set #15:								
Mercury	32	0.2	NR	92	0.4	NR	82	1 22
Sample Set #16:								
Mercury	8.0	0 2	NR	89	0.4	NR	87	1 15
Sample Set #17:								
Mercury	<2.0	0.2	NR	92	0.4	NR	97	1 09
Sample Set #18:								
Mercury	9.3	0.2	NR	94	0.4	NR	82	1.22
Sample Set #19:								
Mercury	13	0.2	NR	80	0.4	NR	81	1.25
Sample Set #20:								
Mercury	14	0.2	NR	83	0.4	NR	83	1.20
Sample Set #21:								
Mercury	0.8	0.2	NR	107	0.4	NR	109	1.0
Sample Set #22.								
Mercury	<0.5	0.2	NR	102	0.4	NR	102	1.0

Table B-8 (continued)

BDAT constituent	Original amount found (ug/l)	Sample Result			Duplicate Result			Accuracy correction factor**
		Spike added (ug/l)	Spike result (ug/l)	Percent recovery*	Spike added (ug/l)	Spike result (ug/l)	Percent recovery*	
Sample Set #23:								
Mercury	<0.5	0.2	NR	102	0.4	NR	104	1.0
Sample Set #24.								
Mercury	<0.5	0.2	NR	104	0.4	NR	108	1 0

NR = Not reported.
*Percent Recovery = [(Spike Result - Original Amount)/Spike Added].
**Accuracy Correction Factor = 100/Percent Recovery (using the lowest percent recovery value).

Reference: Occidental Chemical Corporation. 1987b.

actual spike recovery data were obtained for analysis of both solid and liquid matrices and the lowest percent recovery value was used to calculate the accuracy correction factor. An example of the calculation of a corrected constituent concentration value is shown below.

Analytical Value	% Recovery	Correction Factor	Corrected Value
0.0016 mg/l	95	$\frac{100}{95} = 1.05$	1.05 x 0.0016 = 0.0017 mg/l

APPENDIX C

STATISTICAL ANALYSIS

APPENDIX C - STATISTICAL ANALYSIS

C.1 F Value Determination for ANOVA Test

As noted earlier in Section 1.0, EPA is using the statistical method known as analysis of variance in the determination of the level of performance that represents "best" treatment where more than one technology is demonstrated. This method provides a measure of the differences between data sets. If the differences are not statistically different, the data sets are said to be homogeneous.

If the Agency found that the levels of performance for one or more technologies are not statistically different (i.e., the data sets are homogeneous), EPA would average the long term performance values achieved by each technology and then multiply this value by the largest variability factor associated with any of the acceptable technologies. If EPA found that one technology performs significantly better (i.e., the data sets are not homogeneous), BDAT would be the level of performance achieved by the best technology multiplied by its variability factor.

To determine whether any or all of the treatment performance data sets are homogeneous using the analysis of variance method, it is necessary to compare a calculated "F value" to what is known as a "critical value." (See Table C-1.) These critical values are available in most statistics texts (see, for example, Statistical Concepts and Methods by Bhattacharyya and Johnson, 1977, John Wiley Publications, New York).

Where the F value is less than the critical value, all treatment data sets are homogeneous. If the F value exceeds the critical value, it is

Table C-1

95th PERCENTILE VALUES FOR THE F DISTRIBUTION

n_1 = degrees of freedom for numerator

n_2 = degrees of freedom for denominator

(shaded area = .95)

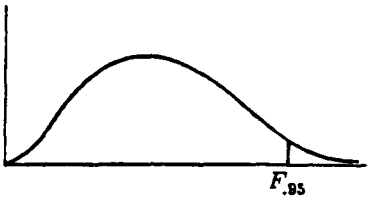

n_2 \ n_1	1	2	3	4	5	6	8	12	16	20	30	40	50	100	∞
1	161.4	199.5	215.7	224.6	230.2	234.0	238.9	243.9	246.3	248.0	250.1	251.1	252.2	253.0	254.3
2	18.51	19.00	19.16	19.25	19.30	19.33	19.37	19.41	19.43	19.45	19.46	19.46	19.47	19.49	19.50
3	10.13	9.55	9.28	9.12	9.01	8.94	8.85	8.74	8.69	8.66	8.62	8.60	8.58	8.56	8.53
4	7.71	6.94	6.59	6.39	6.26	6.16	6.04	5.91	5.84	5.80	5.75	5.71	5.70	5.66	5.63
5	6.61	5.79	5.41	5.19	5.05	4.95	4.82	4.68	4.60	4.56	4.50	4.46	4.44	4.40	4.36
6	5.99	5.14	4.76	4.53	4.39	4.28	4.15	4.00	3.92	3.87	3.81	3.77	3.75	3.71	3.67
7	5.59	4.74	4.35	4.12	3.97	3.87	3.73	3.57	3.49	3.44	3.38	3.34	3.32	3.28	3.23
8	5.32	4.46	4.07	3.84	3.69	3.58	3.44	3.28	3.20	3.15	3.08	3.05	3.03	2.98	2.93
9	5.12	4.26	3.86	3.63	3.48	3.37	3.23	3.07	2.98	2.93	2.86	2.82	2.80	2.76	2.71
10	4.96	4.10	3.71	3.48	3.33	3.22	3.07	2.91	2.82	2.77	2.70	2.67	2.64	2.59	2.54
11	4.84	3.98	3.59	3.36	3.20	3.09	2.95	2.79	2.70	2.65	2.57	2.53	2.50	2.45	2.40
12	4.75	3.89	3.49	3.26	3.11	3.00	2.85	2.69	2.60	2.54	2.46	2.42	2.40	2.35	2.30
13	4.67	3.81	3.41	3.18	3.03	2.92	2.77	2.60	2.51	2.46	2.38	2.34	2.32	2.26	2.21
14	4.60	3.74	3.34	3.11	2.96	2.85	2.70	2.53	2.44	2.39	2.31	2.27	2.24	2.19	2.13
15	4.54	3.68	3.29	3.06	2.90	2.79	2.64	2.48	2.39	2.33	2.25	2.21	2.18	2.12	2.07
16	4.49	3.63	3.24	3.01	2.85	2.74	2.59	2.42	2.33	2.28	2.20	2.16	2.13	2.07	2.01
17	4.45	3.59	3.20	2.96	2.81	2.70	2.55	2.38	2.29	2.23	2.15	2.11	2.08	2.02	1.96
18	4.41	3.55	3.16	2.93	2.77	2.66	2.51	2.34	2.25	2.19	2.11	2.07	2.04	1.98	1.92
19	4.38	3.52	3.13	2.90	2.74	2.63	2.48	2.31	2.21	2.15	2.07	2.02	2.00	1.94	1.88
20	4.35	3.49	3.10	2.87	2.71	2.60	2.45	2.28	2.18	2.12	2.04	1.99	1.96	1.90	1.84
22	4.30	3.44	3.05	2.82	2.66	2.55	2.40	2.23	2.13	2.07	1.98	1.93	1.91	1.84	1.78
24	4.26	3.40	3.01	2.78	2.62	2.51	2.36	2.18	2.09	2.03	1.94	1.89	1.86	1.80	1.73
26	4.23	3.37	2.98	2.74	2.59	2.47	2.32	2.15	2.05	1.99	1.90	1.85	1.82	1.76	1.69
28	4.20	3.34	2.95	2.71	2.56	2.45	2.29	2.12	2.02	1.96	1.87	1.81	1.78	1.72	1.65
30	4.17	3.32	2.92	2.69	2.53	2.42	2.27	2.09	1.99	1.93	1.84	1.79	1.76	1.69	1.62
40	4.08	3.23	2.84	2.61	2.45	2.34	2.18	2.00	1.90	1.84	1.74	1.69	1.66	1.59	1.51
50	4.03	3.18	2.79	2.56	2.40	2.29	2.13	1.95	1.85	1.78	1.69	1.63	1.60	1.52	1.44
60	4.00	3.15	2.76	2.53	2.37	2.25	2.10	1.92	1.81	1.75	1.65	1.59	1.56	1.48	1.39
70	3.98	3.13	2.74	2.50	2.35	2.23	2.07	1.89	1.79	1.72	1.62	1.56	1.53	1.45	1.35
80	3.96	3.11	2.72	2.48	2.33	2.21	2.05	1.88	1.77	1.70	1.60	1.54	1.51	1.42	1.32
100	3.94	3.09	2.70	2.46	2.30	2.19	2.03	1.85	1.75	1.68	1.57	1.51	1.48	1.39	1.28
150	3.91	3.06	2.67	2.43	2.27	2.16	2.00	1.82	1.71	1.64	1.54	1.47	1.44	1.34	1.22
200	3.89	3.04	2.65	2.41	2.26	2.14	1.98	1.80	1.69	1.62	1.52	1.45	1.42	1.32	1.19
400	3.86	3.02	2.62	2.39	2.23	2.12	1.96	1.78	1.67	1.60	1.49	1.42	1.38	1.28	1.13
∞	3.84	2.99	2.60	2.37	2.21	2.09	1.94	1.75	1.64	1.57	1.46	1.40	1.32	1.24	1.00

necessary to perform a "pair wise F" test to determine if any of the sets are homogeneous. The "pair wise F" test must be done for all of the various combinations of data sets using the same method and equation as the general F test.

The F value is calculated as follows:

(i) All data are natural logtransformed.

(ii) The sum of the data points for each data set is computed (T_i).

(iii) The statistical parameter known as the sum of the squares between data sets (SSB) is computed:

$$SSB = \left[\sum_{i=1}^{k} \left(\frac{T_i^2}{N_i} \right) \right] \left(\left[\frac{\sum_{i=1}^{k} T_i}{N} \right]^2 \right)$$

where:

k = number of treatment technologies
n_i = number of data points for technology i
N = number of data points for all technologies
T_i = sum of natural logtransformed data points for each technology.

(iv) The sum of the squares within data sets (SSW) is computed:

$$SSW = \left[\sum_{i=1}^{k} \sum_{j=1}^{n_i} x^2_{i,j} \right] - \sum_{i=1}^{k} \left(\frac{T_i^2}{n_i} \right)$$

where:

$x_{i,j}$ = the natural logtransformed observations (j) for treatment technology (i).

(v) The degrees of freedom corresponding to SSB and SSW are calculated. For SSB, the degree of freedom is given by k-1. For SSW, the degree of freedom is given by N-k.

(vi) Using the above parameters, the F value is calculated as follows:

$$F = \frac{MSB}{MSW}$$

where:

MSB = SSB (k-1) and
MSW = SSW (N-k).

A computational table summarizing the above parameters is shown below.

Computational Table for the F Value

Source	Degrees of freedom	Sum of squares	Mean square	F
Between	k-1	SSB	MSB = SSB/k-1	MSB/MSW
Within	N-k	SSW	MSW = SSW/N-k	

Below are three examples of the ANOVA calculation. The first two represent treatment by different technologies that achieve statistically similar treatment; the last example represents a case where one technology achieves significantly better treatment than the other technology.

Example 1
Methylene Chloride

Steam stripping				Biological treatment			
Influent (μg/l)	Effluent (μg/l)	ln(effluent)	$[\ln(\text{effluent})]^2$	Influent (μg/l)	Effluent (μg/l)	ln(effluent)	$[\ln(\text{effluent})]^2$
1550 00	10 00	2 30	5.29	1960 00	10.00	2.30	5.29
1290 00	10.00	2 30	5.29	2568.00	10.00	2.30	5.29
1640.00	10 00	2.30	5.29	1817.00	10.00	2.30	5.29
5100 00	12 00	2.48	6.15	1640.00	26.00	3.26	10.63
1450 00	10 00	2.30	5.29	3907.00	10.00	2.30	5.29
4600.00	10.00	2.30	5.29				
1760 00	10 00	2 30	5.29				
2400.00	10.00	2 30	5.29				
4800 00	10.00	2.30	5.29				
12100.00	10 00	2.30	5.29				
Sum							
-	-	23.18	53.76	-	-	12.46	31.79
Sample Size.							
10	10	10	-	5	5	5	-
Mean							
3669	10 2	2.32	-	2378	13.2	2.49	-
Standard Deviation:							
3328.67	.63	.06	-	923.04	7.15	.43	-
Variability Factor.							
	1.15	-	-	-	2.48	-	-

ANOVA Calculations.

$$SSB = \left[\sum_{i=1}^{k} \left(\frac{T_i^2}{n_i} \right) \right] - \left(\left[\frac{\sum_{i=1}^{k} T_i}{N} \right]^2 \right)$$

$$SSW = \left[\sum_{i=1}^{k} \sum_{j=1}^{n_i} x^2_{i,j} \right] - \sum_{i=1}^{k} \left(\frac{T_i^2}{n_i} \right)$$

MSB = SSB/(k-1)

MSW = SSW/(N-k)

Example 1 (continued)

$F = MSB/MSW$

where

k = number of treatment technologies

n_i = number of data points for technology i

N = number of natural log transformed data points for all technologies

T_i = sum of log transformed data points for each technology

X_{ij} = the nat. log transformed observations (j) for treatment technology (i)

$n_1 = 10,\ n_2 = 5,\ N = 15,\ k = 2,\ T_1 = 23\ 18,\ T_2 = 12.46,\ T = 35.64,\ T^2 = 1270.21$

$T_1^2 = 537.31 \quad T_2^2 = 155.25$

$$SSB = \left(\frac{537.31}{10} + \frac{155.25}{5}\right) - \frac{1270.21}{15} = 0.10$$

$$SSW = (53.76 + 31.79) - \left(\frac{537.31}{10} + \frac{155.25}{5}\right) = 0.77$$

$MSB = 0\ 10/1 = 0.10$

$MSW = 0.77/13 = 0.06$

$$F = \frac{0.10}{0.06} = 1.67$$

ANOVA Table

Source	Degrees of freedom	SS	MS	F
Between(B)	1	0.10	0.10	1.67
Within(W)	13	0.77	0.06	

The critical value of the F test at the 0 05 significance level is 4.67. Since the F value is less than the critical value, the means are not significantly different (i e., they are homogeneous).

Note: All calculations were rounded to two decimal places. Results may differ depending upon the number of decimal places used in each step of the calculations.

Example 2
Trichloroethylene

Steam stripping				Biological treatment			
Influent (μg/l)	Effluent (μg/l)	ln(effluent)	[ln(effluent)]^2	Influent (μg/l)	Effluent (μg/l)	ln(effluent)	[ln(effluent)]^2
1650 00	10 00	2 30	5 29	200 00	10.00	2.30	5.29
5200.00	10.00	2.30	5.29	224.00	10.00	2.30	5.29
5000 00	10.00	2.30	5.29	134.00	10.00	2.30	5.29
1720 00	10 00	2.30	5.29	150.00	10.00	2.30	5.29
1560 00	10.00	2.30	5.29	484.00	16.25	2.79	7.78
10300.00	10.00	2.30	5.29	163.00	10.00	2.30	5.29
210 00	10.00	2 30	5.29	182.00	10.00	2.30	5.29
1600.00	27 00	3.30	10.89				
204.00	85 00	4 44	19.71				
160.00	10.00	2.30	5.29				
Sum							
-	-	26.14	72.92	-	-	16.59	39.52
Sample Size:							
10	10	10	-	7	7	7	-
Mean:							
2760	19 2	2 61	-	220	10.89	2.37	-
Standard Deviation.							
3209.6	23 7	.71	-	120.5	2.36	.19	-
Variability Factor:							
-	3 70	-	-	-	1.53	-	-

ANOVA Calculations:

$$SSB = \left[\sum_{i=1}^{k} \left(\frac{T_i^2}{n_i} \right) \right] - \left(\frac{\left[\sum_{i=1}^{k} T_i \right]^2}{N} \right)$$

$$SSW = \left[\sum_{i=1}^{k} \sum_{j=1}^{n_i} x^2_{i,j} \right] - \sum_{i=1}^{k} \left(\frac{T_i^2}{n_i} \right)$$

$$MSB = SSB/(k-1)$$

$$MSW = SSW/(N-k)$$

Example 2 (continued)

$F = MSB/MSW$

where:

k = number of treatment technologies

n_i = number of data points for technology i

N = number of data points for all technologies

T_i = sum of natural log transformed data points for each technology

X_{ij} = the natural log transformed observations (j) for treatment technology (i)

$N_1 = 10$, $N_2 = 7$, $N = 17$, $k = 2$, $T_1 = 26.14$, $T_2 = 16.59$, $T = 42.73$, $T^2 = 1825.85$, $T_1^2 = 683.30$, $T_2^2 = 275.23$

$$SSB = \left(\frac{683.30}{10} + \frac{275.23}{7}\right) - \frac{1825.85}{17} = 0.25$$

$$SSW = (72.92 + 39.52) - \left(\frac{683.30}{10} + \frac{275.23}{7}\right) = 4.79$$

$MSB = 0.25/1 = 0.25$

$MSW = 4.79/15 = 0.32$

$$F = \frac{0.25}{0.32} = 0.78$$

ANOVA Table

Source	Degrees of freedom	SS	MS	F
Between(B)	1	0.25	0.25	0.78
Within(W)	15	4.79	0.32	

The critical value of the F test at the 0.05 significance level is 4.54. Since the F value is less than the critical value, the means are not significantly different (i.e., they are homogeneous).

Note: All calculations were rounded to two decimal places. Results may differ depending upon the number of decimal places used in each step of the calculations.

Example 3
Chlorobenzene

Activated sludge followed by carbon adsorption				Biological treatment			
Influent (μg/l)	Effluent (μg/l)	ln(effluent)	$[\ln(\text{effluent})]^2$	Influent (μg/l)	Effluent (μg/l)	ln(effluent)	$\ln[(\text{effluent})]^2$
7200.00	80 00	4.38	19.18	9206 00	1083.00	6.99	48.86
6500 00	70 00	4 25	18.06	16646.00	709.50	6.56	43.03
6075 00	35.00	3.56	12.67	49775.00	460.00	6.13	37.58
3040.00	10 00	2.30	5.29	14731.00	142.00	4.96	24.60
				3159.00	603.00	6.40	40.96
				6756 00	153.00	5.03	25.30
				3040.00	17.00	2.83	8.01
Sum							
-	-	14.49	55.20	-	-	38.90	228.34
Sample Size.							
4	4	4	-	7	7	7	-
Mean							
5703	49	3 62	-	14759	452.5	5.56	-
Standard Deviation.							
1835.4	32.24	95		16311.86	379.04	1.42	-
Variability Factor:							
-	7.00	-	-	-	15.79	-	-

ANOVA Calculations:

$$SSB = \left[\sum_{i=1}^{k} \left(\frac{T_i^2}{n_i} \right) \right] - \left(\frac{\left[\sum_{i=1}^{k} T_i \right]^2}{N} \right)$$

$$SSW = \left[\sum_{i=1}^{k} \sum_{j=1}^{n_i} x^2_{i,j} \right] - \sum_{i=1}^{k} \left(\frac{T_i^2}{n_i} \right)$$

MSB = SSB/(k-1)

MSW = SSW/(N-k)

F = MSB/MSW

Example 3 (continued)

where,

k = number of treatment technologies

n_i = number of data points for technology i

N = number of data points for all technologies

T_i = sum of natural log transformed data points for each technology

X_{ij} = the natural log transformed observations (j) for treatment technology (i)

$N_1 = 4$, $N_2 = 7$, $N = 11$, $k = 2$, $T_1 = 14.49$, $T_2 = 38.90$, $T = 53.39$, $T^2 = 2850.49$, $T_1^2 = 209.96$

$T_2^2 = 1513.21$

$$SSB = \left(\frac{209.96}{4} + \frac{1513.21}{7}\right) - \frac{2850.49}{11} = 9.52$$

$$SSW = (55.20 + 228.34) - \left(\frac{209.96}{4} + \frac{1513.21}{7}\right) = 14.88$$

$MSB = 9.52/1 = 9.52$

$MSW = 14.88/9 = 1.65$

$F = 9.52/1.65 = 5.77$

ANOVA Table

Source	Degrees of freedom	SS	MS	F
Between(B)	1	9.53	9.53	5.77
Within(W)	9	14.89	1.65	

The critical value of the F test at the 0.05 significance level is 5.12. Since the F value is larger than the critical value, the means are significantly different (i.e., they are heterogeneous).

Note: All calculations were rounded to two decimal places. Results may differ depending upon the number of decimal places used in each step of the calculations.

C.2 Variability Factor

$$VF = \frac{C_{99}}{Mean}$$

where:

VF = estimate of daily maximum variability factor determined from a sample population of daily data.

C_{99} = Estimate of performance values for which 99 percent of the daily observations will be below. C_{99} is calculated using the following equation: $C_{99} = Exp(y + 2.33\ Sy)$ where y and Sy are the mean and standard deviation, respectively, of the logtransformed data.

Mean = average of the individual performance values.

EPA is establishing this figure as an instantaneous maximum because the Agency believes that on a day-to-day basis the waste should meet the applicable treatment standards. In addition, establishing this requirement makes it easier to check compliance on a single day. The 99th percentile is appropriate because it accounts for almost all process variability.

APPENDIX D

OTHER AGENCY CHARACTERIZATION DATA

APPENDIX D - OTHER AGENCY CHARACTERIZATION DATA

The following table presents data collected by the characterization and assessment division of the Office of Solid Waste. These data were collected with the intent to characterize K071 wastes as land disposed. These data represent K071 wastes that were either mixed with other listed wastes or treated by simple dewatering which the Agency does not consider to be BDAT. The data presented in this Appendix do not represent sampling of K071 waste as generated.

Table D-1 Other Agency-Collected Characterization Data

BDAT Metals	Mixed K071/K106 Plant D	Mixed dewatered K071/K106 Plant D	Dewatered K071 Plant E	Dewatered K071 Plant E	Dewatered K071 Plant E	Dewatered K071 Plant F	Dewatered K071 Plant F	Dewatered K071 Plant F	Dewatered K071 Plant G	Dewatered K071 Plant H
Antimony	<3.8	<3.8	<15.2	134	<15.2	<15.2	<15.2	<15.2	<15.2	31
Arsenic	2.6	7.5	<7.4	64	<7.4	<7.4	<7.4	18	<7.4	31
Barium	7.5	20	4.2	9.8	15	6.5	10	33	11.5	135
Beryllium	<0.1	0.15	<0.4	0.9	<0.4	<0.4	<0.4	<0.4	<0.4	0.56
Cadmium	<0.3	0.52	1.8	7.6	<1.2	<1.2	<1.2	<1.2	<1.2	1.5
Chromium	2.3	8.1	<2.4	29	<2.4	4.0	<2.4	16	<2.4	22
Copper	10	36	7.5	25	50	47	5.6	190	4.3	89
Lead	12	44	29	270	106	72	<26	360	34	380
Mercury	337	4400	40	12	9.8	8.6	8.3	36	62	91
Nickel	9.5	19	18	38	12	29	21	140	21	140
Selenium	<0.5	<0.8	<5.0	5.0	<2.5	<0.5	<2.5	<0.5	<2.5	<0.5
Silver	<0.5	<0.5	<2.0	32	<2.0	<2.0	<2.0	<2.0	<2.0	12
Vanadium	1.4	7.0	<1.6	20	<1.6	2.5	<1.6	12	<1.6	11
Zinc	42	97	28	14	130	50	17	206	45	320

REFERENCES

Bennett. 1986. Memorandum from B.L. Bennett, Plant Manager, Stauffer Chemical Company, St. Gabriel, LA to Jim Berlow, USEPA, Office of Solid Waste. Mercury analysis values for treatment of K071 waste by a dewatering/water washing treatment system, November 12, 1986.

Occidental Chemical Corporation. 1987b. Delisting petition for inorganic waste stream K071: brine purification muds. Submitted by Occidental Chemical Corporation, Muscle Shoals plant, Sheffield, Alabama. Office of Solid Waste. Washington, D.C.: U.S. Environmental Protection Agency.

Occidental Chemical Corporation. 1987a. Delisting petition for NaCl brine purification muds (K071). Submitted by Occidental Chemical Corporation, Delaware City, Delaware. Office of Solid Waste. Washington, D.C.: U.S. Environmental Protection Agency.

SRI. 1987. Stanford Research Institute. 1987 Directory of chemical producers - United States of America. Menlo Park, Calif.: Stanford Research Institute.

USEPA. 1986a. U.S. Environmental Protection Agency, Office of Solid Waste. Summary of available waste composition data from review of literature and data bases for use in treatment technology application and evaluation for "California list" waste streams. Final Report. Washington, D.C.: U.S. Environmental Protection Agency.

USEPA. 1986b. U.S. Environmental Protection Agency. Test methods for evaluating solid waste. 3rd ed. U.S. Environmental Protection Agency. Office of Solid Waste and Emergency Response. November 1986.

USEPA. 1986c. U.S. Environmental Protection Agency. Hazardous waste management systems; land disposal restrictions; Final Rule; Appendix I to Part 268 - Toxicity Leaching Procedure (TCLP). Federal Register. Vol. 51, No. 216. November 7, 1986. pp. 40643-40654.

USEPA. 1987a. Office of Solid Waste. Computer printout: Data on management of K071 wastes from HWDMS data base. Retrieved January 16, 1987. Washington, D.C.: U.S. Environmental Protection Agency.

USEPA. 1987b. U.S. Environmental Protection Agency, Office of Solid Waste. Engineering analysis for production of chlorine and sodium or potassium hydroxide by the mercury cell process. Final Report. Washington, D.C.: U.S. Environmental Protection Agency.

USEPA. 1988a. U.S. Environmental Protection Agency, Office of Solid Waste. Onsite engineering report of treatment technology performance and operation for Vulcan Materials Company, Port Edwards, Wisconsin. Final Report. Washington, D.C.: U.S. Environmental Protection Agency. (See 2.6.5.1(a)).

USEPA. 1988b. U.S. Environmental Protection Agency, Office of Solid Waste. Sampling and analysis plan for Vulcan Materials Company, Port Edwards, Wisconsin. Final Report. Washington, D.C.: U.S. Environmental Protection Agency.

References for Stabilization

Ajax Floor Products Corp. n.d. Product literature: technical data sheets, Hazardous Waste Disposal System. P.O. Box 161, Great Meadows, N.J. 07838.

Austin, G.T. 1984. Shreve's chemical process industries, 5th ed. New York: McGraw-Hill.

Bishop, P.L., Ransom, S.B., and Grass, D.L. 1983. Fixation mechanisms in solidification/stabilization of inorganic hazardous wastes. In Proceedings of the 38th Industrial Waste Conference, 10-12 May 1983, at Purdue University, West Lafayette, Indiana.

Conner, J.R. 1986. Fixation and Solidification of Wastes. Chemical Engineering. Nov. 10, 1986.

Cullinane, M.J., Jr., Jones, L.W., and Malone, P.G. 1986. Handbook for stabilization/solidification of hazardous waste. U.S. Army Engineer Waterways Experiment Station. EPA Report No. 540/2-86/001. Cincinnati, Ohio: U.S. Environmental Protection Agency.

Electric Power Research Institute. 1980. FGD sludge disposal manual, 2nd ed. Prepared by Michael Baker Jr., Inc. EPRI CS-1515 Project 1685-1 Palo Alto, California: Electric Power Research Institute.

Mishuck, E., Taylor, D.R., Telles, R., and Lubowitz, H. 1984. Encapsulation/Fixation (E/F) mechanisms. Report No. DRXTH-TE-CR-84298. Prepared by S-Cubed under Contract No. DAAK11-81-C-0164.

Pojasek, R.B. 1979. Solid-waste disposal: Solidification. Chemical Engineering 86(17):141-145.

USEPA. 1980. U.S. Environmental Protection Agency. U.S. Army Engineer Waterways Experiment Station. Guide to the disposal of chemically stabilized and solidified waste. Prepared for MERL/ORD under Interagency Agreement No. EPA-IAG-D4-0569. PB81-181505. Cincinnati, Ohio: U.S. Environmental Protection Agency.

References for Sludge Filtration

Eckenfelder, W.W. 1985. Wastewater treatment. Chemical Engineering, 85:72.

Grain, Richard W. 1981. Solids removal and concentration. In Third Conference on Advanced Pollution Control for the Metal Finishing Industry. Cincinnati, Ohio: U.S. Environmental Protection Agency. pp. 56-62.

Kirk-Othmer. 1980. Encyclopedia of Chemical Technology. 3rd ed., New York: John Wiley and Sons. Vol. 10.

Perry, Robert H. and Chilton, Cecil H. 1973. Chemical Engineers' Handbook. Fifth Edition. New York: McGraw Hill, Inc., Section 19.

References for Chemical Precipitation

Cherry, Kenneth F. 1982. Plating Waste Treatment. Ann Arbor, MI: Ann Arbor Science, Inc. pp 45-67.

Cushnie, George C., Jr. 1985. Electroplating Wastewater Pollution Control Technology. Park Ridge, NJ: Noyes Publications. pp 48-62, 84-90.

Cushnie, George C., Jr. 1984. Removal of Metals from Wastewater: Neutralization and Precipitation. Park Ridge, NJ: Noyes Publications. pp 55-97.

Gurnham, C.F. 1955. Principles of Industrial Waste Treatment. New York: John Wiley and Sons. pp 224-234.

Kirk-Othmer. 1980. Encyclopedia of Chemical Technology, 3rd ed., "Flocculation", Vol. 10. New York: John Wiley and Sons. pp 489-516.

U.S. EPA. 1983. Treatability Manual. Volume III, Technology for Control/Removal of Pollutants. EPA-600/2-82-001c, January 1983. pp. 111.3.1.3-2.