EPA/540/2-89/002

SUPERFUND TREATABILITY CLEARINGHOUSE

Document Reference:

Roy F. Weston, Inc. "Pilot Investigation of Low-Temperature Stripping of Volatile Organic Compounds (VOCs) From Soil: Volume 1 - Technical Report and Volume II - Appendices." Technical report prepared for USATHAMA. 123 pp. June 1986.

EPA LIBRARY NUMBER:

Superfund Treatability Clearinghouse - EUQS

SUPERFUND TREATABILITY CLEARINGHOUSE ABSTRACT

Treatment Process:	Physical/Chemical - Low Temperature Thermal Stripping
Media:	Soil/Sandy and Silty
Document Reference:	Roy F. Weston, Inc. "Pilot Investigation of Low-Temperature Stripping of Volatile Organic Compounds (VOCs) From Soil: Volume 1 - Technical Report and Volume II - Appendices." Technical report prepared for USATHAMA 123 pp. June 1986.
Document Type:	Contractor/Vendor Treatability Study
Contact:	Wayne Sisk U.S. DOD/USATHAMA Aberdeen Proving Ground, MD 21010-5401 301-571-2054
Site Name:	Letterkenny Army Depot, Chambersburg, PA (NPL - Federal facility)
Location of Test:	West Chester, PA

BACKGROUND: The U.S. Army Toxic and Hazardous Materials Agency (USATHAMA) is investigating technologies to treat soils contaminated with solvents. A pilot study of low temperature thermal stripping was conducted at Letterkenny Army Depot (LEAD) near Chambersburg, Pennsylvania, from 8/5/85 to 9/16/85.

OPERATIONAL INFORMATION: Soils from two lagoons at LEAD that were used for the disposal of organic liquids were chosen for treatment. The total VOC concentrations in feed soils were approximately 3503 ppm. The soils were sandy and treated at 10 pounds per feed cycle. The unit was designed for processing 385 pounds per hour. Soils were treated in a thermal processor, an indirect heat exchanger which was used to heat and consequently dry the contaminated soil and volatilize the contaminants. Contaminants in the off-gases were thermally destroyed in an afterburner.

The pilot investigation was completed in two phases. Phase I consisted of 18 test runs completed to evaluate the effect on VOC removal efficiency of varying operating conditions (i.e., soil discharge temperature, soil residence time, and air inlet temperature). The 18 test runs were designed in a matrix format to investigate three levels of soil discharge temperature: 50°C, 100°C and 150°C; three levels of soil residence time: 30 minutes, 45 minutes, and 60 minutes; and two levels of air inlet temperature: ambient and 90°C.

Phase II of the Pilot study consisted of 10 "optimization" test runs. There were four primary purposes for the optimization runs: 1) to evaluate the effect on VOC removal efficiency of varying operating conditions beyond the limits set for Phase I of the investigation (i.e., maximum soil discharge temperature and maximum soil residence time); 2) to evaluate the VOC removal rate along the length of the unit; 3) to evaluate the VOC

NOTE: Quality assurance of data may not be appropriate for all uses.

removal efficiency associated with three "duplicate" test runs; and 4) to evaluate the VOC removal efficiency associated with reprocessing soils.
PERFORMANCE: The study concludes that process variables can be manipulated to achieve desired effluent concentrations (i.e., 100 ppm, 10 ppm, 1 ppm, etc.) As conducted, VOCs were removed to concentrations below 100 ppm. The level of removal was a direct and predictable function of VOC feed concentration, residence time, moisture content, heat input, and generating temperature. VOC removal efficiencies associated with an elevated air inlet temperature were generally lower than those associated with ambient air inlet temperature. The appendices provide extensive analytical methods information and other QA/QC information.

CONTAMINANTS:

Analytical data is provided in the treatability study report. The breakdown of the contaminants by treatability group is:

Treatability Group	CAS Number	Contaminants
W04-Halogenated Aliphatic Solvents	127-18-4	Tetrachloroethene
	156-60-5	Trans-1,2-dichloroethene
	79-01-6	Trichloroethene
W07-Heterocyclics and Simple Aromatics	1330-20-7	Xylenes (Total)
W13-Other Organics	TOT-VOC	Total Volatile Organics

NOTE: Quality assurance of data may not be appropriate for all uses.

W. Glynn
980-TS1-RT-EUGS

Installation Restoration General Environmental Technology Development

REPORT NO. AMXTH-TE-CR-86074

Task 11. Pilot Investigation of Low Temperature Thermal Stripping of Volatile Organic Compounds (VOC's) From Soil

Volume 1 - Technical Report

June 1986

Distribution unlimited; approved for public release.

Prepared for:
U.S. ARMY TOXIC AND HAZARDOUS MATERIALS AGENCY
Aberdeen Proving Ground (Edgewood Area), Maryland 21010

WESTON DESIGNERS CONSULTANTS
Roy F. Weston, Inc.
West Chester
Pennsylvania

SECURITY CLASSIFICATION OF THIS PAGE (When Data Entered)

REPORT DOCUMENTATION PAGE

READ INSTRUCTIONS BEFORE COMPLETING FORM

1. REPORT NUMBER

2. GOVT ACCESSION NO.

3. RECIPIENT'S CATALOG NUMBER

4. TITLE (and Subtitle) Installation Restoration General Environmental Technology Development. Task 11. Pilot-Scale Investigation of Low Temperature Thermal Stripping of Volatile Organic Compounds (VOC's) from Soil

5. TYPE OF REPORT & PERIOD COVERED
Draft Final Report-
May 1985 - February 1986

6. PERFORMING ORG. REPORT NUMBER

7. AUTHOR(s)
Nancy P. McDevitt Peter J. Marks
John W. Noland, P.E.

8. CONTRACT OR GRANT NUMBER(s)

9. PERFORMING ORGANIZATION NAME AND ADDRESS
Roy F. Weston, Inc.
Weston Way
West Chester, PA 19380

10. PROGRAM ELEMENT, PROJECT, TASK AREA & WORK UNIT NUMBERS

11. CONTROLLING OFFICE NAME AND ADDRESS
U.S. Army Toxic & Hazardous Materials Agency
Aberdeen Proving Ground
Edgewood Area, MD 21010

12. REPORT DATE
February 1986

13. NUMBER OF PAGES

14. MONITORING AGENCY NAME & ADDRESS(if different from Controlling Office)

15. SECURITY CLASS. (of this report)
Unclassified

15a. DECLASSIFICATION/DOWNGRADING SCHEDULE

16. DISTRIBUTION STATEMENT (of this Report)
Distribution unlimited; approved for public release.

17. DISTRIBUTION STATEMENT (of the abstract entered in Block 20, if different from Report)

18. SUPPLEMENTARY NOTES
Contract Project Officer - Ms. Donna L. Koltuniak
(AMXTH-TE-D)

19. KEY WORDS (Continue on reverse side if necessary and identify by block number)

Volatile Organic Compounds (VOC's)	Afterburner
Low Temperature Thermal Stripping	Thermal Processor
Operating Temperature	Hazardous Substance List (HSL)
Residence Time	Volatization
Air Inlet Temperature	Soil Discharge Temperature

20. ABSTRACT (Continue on reverse side if necessary and identify by block number)

This report presents the results of a pilot investigation which successfully demonstrated the effectiveness of Low Temperature Thermal Stripping as a decontamination method for soils contaminated with volatile organic compounds (VOC's). The project included: process equipment and test site selection, waste characterization, development of a detailed test plan and safety plan, pilot investigation and evaluation of results.

DD FORM 1 JAN 73 1473 EDITION OF 1 NOV 65 IS OBSOLETE

SECURITY CLASSIFICATION OF THIS PAGE (When Data Entered)

Installation Restoration General Environmental Technology Development

REPORT NO. AMXTH-TE-CR-86074

Task 11. Pilot Investigation of Low Temperature Thermal Stripping of Volatile Organic Compounds (VOC's) From Soil

Volume 1 - Technical Report

June 1986

Distribution unlimited; approved for public release.

Prepared for:
U.S. ARMY TOXIC AND HAZARDOUS MATERIALS AGENCY
Aberdeen Proving Ground (Edgewood Area), Maryland 21010

WESTON DESIGNERS CONSULTANTS
Roy F. Weston, Inc.
West Chester
Pennsylvania

TABLE OF CONTENTS

VOLUME 1. - TECHNICAL REPORT

Section	Title	Page
1	EXECUTIVE SUMMARY	1-1
2	INTRODUCTION	2-1
	2.1 Background	2-1
	2.2 Purpose	2-1
	2.3 Objectives of the Pilot Study	2-1
	2.4 Report organization	2-2
3	TEST SITE	3-1
	3.1 Test site location and description	3-1
	3.2 Waste characteristics	3-1
	3.2.1 LEAD Remedial Investigation and Feasibility Study (RI/FS)	3-1
	3.2.2 Follow-up waste characterization of soils in Area K-1	3-6
	3.3 Site/soil characteristics	3-7
	3.3.1 Site characteristics	3-7
	3.3.2 Soil characteristics	3-7
	3.4 Environmental permitting	3-10
	3.4.1 Air emissions	3-10
	3.4.2 Disposal of the processed soils	3-11
	3.4.3 Disposal of the decontamination water	3-11
4	DESCRIPTION OF THE PROCESS EQUIPMENT	4-1
	4.1 Thermal processing system	4-1
	4.1.1 Feed soil system	4-1
	4.1.2 Thermal processor	4-4
	4.1.3 Processed soil handling system	4-6
	4.1.4 Hot oil system	4-8
	4.1.5 Air systems	4-8
	4.1.6 Emission control system	4-10
	4.1.7 Electrical supply	4-10
5.	PILOT STUDY FRAMEWORK	5-1

TABLE OF CONTENTS
(continued)

Section	Title	Page
6	TYPICAL ON-SITE ACTIVITIES	6-1
	6.1 Daily routine	6-1
	6.1.1 Pretest activities	6-1
	6.1.2 Test activities	6-5
	6.1.3 Post-test activities	6-6
	6.1.4 Miscellaneous activities	6-7
	6.2 Project closure activities	6-7
	6.2.1 Excavation area	6-7
	6.2.2 Processing area	6-7
7	EXPERIMENTAL VARIABLES	7-1
	7.1 Independent variables	7-1
	7.1.1 Feed soil composition/conditions	7-1
	7.1.2 Air inlet composition/conditions	7-3
	7.2 Control variables	7-3
	7.2.1 Control variables held constant at all levels	7-3
	7.2.2 Control test variables held constant at various levels	7-5
	7.3 Response variables measured	7-6
	7.3.1 Soil discharge composition/conditions	7-6
	7.3.2 Air discharge composition/conditions	7-6
8	SAMPLING TECHNIQUES AND ANALYTICAL METHODS	8-1
	8.1 Field sampling techniques	8-1
	8.1.1 Soil sampling techniques	8-1
	8.1.2 Air sampling techniques	8-5
	8.2 Analytical techniques	8-11
	8.2.1 VOC's	8-11
9	PRESENTATION OF DATA	9-1
	9.1 Independent variables	9-1
	9.1.1 Actual feed soil composition/conditions	9-1
	9.1.2 Actual air inlet composition/conditions	9-9

TABLE OF CONTENTS
(continued)

Section	Title	Page
9.2	Control test variables	9-9
9.2.1	Control variables held constant at all levels	9-9
9.2.2	Control variables held constant at various levels	9-10
9.3	Response variables measured	9-11
9.3.1	Processed soil composition/ conditions	9-11
9.3.2	Actual air discharge composition/ conditions	9-16
10	ANALYSIS OF RESULTS	10-1
10.1	Statistical correlations	10-1
10.1.1	Analytical technique for developing equations	10-1
10.1.2	Presentation of correlations	10-4
10.2	Emission control efficiency	10-17
10.2.1	Controlled emissions	10-17
10.2.2	Fugitive emissions	10-21
10.3	Results of optimization runs	10-23
10.3.1	VOC removal along the length of the unit	10-23
10.3.2	Reproducibility of treatment	10-28
10.3.3	Reprocessing of treated soils that contain a contaminant residue	10-30
10.4	Miscellaneous observations	10-30
10.4.1	Soil density	10-30
10.4.2	Soil appearance	10-33
11	COMPARISON OF TEST RESULTS TO REGULATORY CRITERIA	11-1
11.1	Processed soils	11-1
11.1.1	Criteria for classification of a hazardous waste	11-1
11.1.2	Classification of LEAD processed soils	11-2
11.1.3	Delisting of the processed soils	11-2
11.2	Stack emissions	11-2
11.2.1	Principal organic hazardous constituent (POHC) destruction and removal efficiency	11-3
11.2.2	Particulate emissions	11-3
11.2.3	HCl emissions	11-4

TABLE OF CONTENTS
(continued)

Section	Title	Page
12	FULL SCALE DESIGN CONSIDERATIONS	12-1
	12.1 Modifications to full-scale design	12-1
	12.1.1 Feed system	12-1
	12.1.2 Thermal processor	12-1
	12.1.3 Heating medium	12-1
	12.1.4 Soil discharge	12-1
	12.1.5 Air systems	12-2
	12.2 Example calculation using correlations to design a full-scale system	12-3
	12.3 Economics of a full-scale system	12-5
13	CONCLUSIONS AND RECOMMENDATIONS	13-1
	13.1 Conclusions	13-1
	13.2 Recommendations	13-2
	REFERENCES	
VOLUME 2. - APPENDICES		
	APPENDIX A - ORGANIC WASTE CHARACTERISTICS OF SITE SOILS AT LEAD (determined during preliminary investigations)	A-1
	APPENDIX B - GRAIN SIZE GRADATION CURVES CORRESPONDING TO FILL SOIL AND NATIVE SOIL	B-1
	APPENDIX C - AIR SAMPLING TECHNIQUES	C-1
	APPENDIX D - FEDERAL REGULATIONS	D-1
	APPENDIX E - ANALYTICAL METHODS	E-1
	APPENDIX F - FIELD/ANALYTICAL DATA	F-1
	APPENDIX G - MASS/ENERGY BALANCES	G-1
	APPENDIX H - SUPPLEMENTAL DATA	H-1
	APPENDIX I - STATISTICAL ANALYTICAL APPROACH	I-1

LIST OF FIGURES

Figure No.	Title	Page
3-1	General location map of the study area on the Letterkenny Army Depot, Franklin County, Pennsylvania	3-2
3-2	Location map of the processing and excavation areas on the Letterkenny Army Depot	3-3
3-3	Aerial photograph of the processing and excavation area on the Letterkenny Army Depot	3-4
3-4	Locations of potential contaminant sources, East Patrol Road Disposal Area, Letterkenny Army Depot	3-5
3-5	Locations of soil borings drilled in area K-1 during the waste characterization phase of the Pilot Study	3-8
4-1	Thermal processing system	4-2
4-2	Schematic of rotary valve feed mechanism	4-3
4-3	Internal view of thermal processor	4-5
4-4	Soil discharge gate	4-7
4-5	Off-gas discharge lines	4-9
6-1	Typical schedule of daily on-site activities	6-2
8-1	Thermal processing system instrumentation and sampling/analysis diagram	8-2
8-2	Sampling device used to monitor soil temperature	8-4
10-1	Comparison of actual versus estimated values of the natural logarithm of total VOC's in the processed soil - low temperature runs	10-9

LIST OF FIGURES
(continued)

Figure No.	Title	Page
10-2	Comparison of actual versus estimated values of the natural logarithm of total VOC's in the processed soil - middle temperature runs	10-12
10-3	Comparison of actual and estimated values of the natural logarithm of the total VOC concentration in the processed soil - high temperature runs	10-16
10-4	Comparison of actual versus estimated values of temperature of the processed soil - high temperature runs	10-19

LIST OF TABLES

Table No.	Title	Page
3-1	Concentration range of VOC's determined to be present in Area K-1 (based on testing performed on 10, 11, 12 June 1985)	3-9
5-1	Summary of test run matrices and controlled test variables - Phase I and Phase II test runs	5-3
7-1	Summary of test variables for the thermal processor	7-2
8-1	Parameters monitored and/or sampled for in soils	8-3
8-2	Air sampling parameters measured in the field for each test location	8-6
8-3	Testing protocols for air sampling	8-9
8-4	Analytical parameters and methodologies	8-12
9-1	Summary of values of test variables for Phase I and Phase II of the pilot study	9-2
9-2	Comparison of VOC concentrations in excavated soils and feed soils (ppm by weight)	9-4
9-3	Comparison of laboratory GC/MS analytical results and derived concentrations in the feed soil (ppm by weight)	9-7
9-4	Concentration of VOCs in the processed soils (ppm by weight)	9-12
9-5	Removal efficiency of VOC's (percent)	9-14
9-6	VOC concentrations in the air discharge stream at the afterburner inlet as determined by CC/MS (ppm by volume)	9-17
9-7	Summary of stack testing results	9-20

LIST OF TABLES
(continued)

Table No.	Title	Page
10-1	Comparison of actual and estimated values for the natural log of the total VOC concentration in the processed soil - low temperature	10-7
10-2	Comparison of actual value of natural log of total VOC's concentration in processed soil with estimated value - middle temperatures	10-11
10-3	Comparison of actual and estimated values for the natural log of the total VOC concentrations in the processed soil - high temperatures	10-15
10-4	Comparison of actual versus estimated values of temperature of the processed soil - high temperatures	10-18
10-5	Comparison of VOC concentrations in the excavated and feed soils	10-22
10-6	Soil composition/conditions from Test Runs 24, 25, and 26 (Reproducibility of treatment)	10-29
10-7	Soil composition/conditions from Test Runs 27 and 28 (Reprocessing of treated soils)	10-31
10-8	Average soil densities for low, medium, and high temperature test runs	10-32

1. EXECUTIVE SUMMARY

Soils at several U. S. Army Material Command (AMC) installations have been contaminated with a variety of organic compounds as a result of past solvent handling practices. In many cases the contaminated soil has resulted in the degradation of underlying groundwater supplies.

In order to limit further contaminant migration, the U. S. Army Toxic and Hazardous Materials Agency (USATHAMA) is investigating technologies to effectively treat the contaminated soil. One treatment alternative is low temperature thermal stripping of volatile organic compounds (VOC's) from soil. A pilot study was conducted at Letterkenny Army Depot (LEAD) near Chambersburg, Pennsylvania from 5 August 1985 to 16 September 1985 to determine the feasibility of this technology for future remedial action projects at Department of Defense (DOD) installations.

Soils from the site of two lagoons that were apparently used for the disposal of organic liquids were chosen for treatment. This selection was based on the type, variety, concentration, and volatile nature of the compounds found in this area. Two types of soil existed at this site: fill soil and native soil. A grain size analysis indicated that the fill material consisted of gravelly sands, and the native soil consisted of sandy clay/sandy silt.

Soils were treated in a thermal processor, an indirect heat exchanger which was used to heat and consequently dry the contaminated soil. The net effect of heating the soil was to evaporate volatile contaminants in the soil. A carrier gas (i.e., air) was introduced to the unit to enhance contaminant removal. Contaminants in the off-gases were thermally destroyed in an afterburner.

The pilot investigation was completed in two phases. Phase I consisted of 18 test runs completed to evaluate the effect on VOC removal efficiency of varying operating conditions, i.e., soil discharge temperature, soil residence time, and air inlet temperature. The 18 test runs were designed in a matrix format to investigate three levels of soil discharge temperature: 50°C, 100°C, and 150°C; three levels of soil residence time: 30 minutes, 45 minutes, and 60 minutes; and two levels of air inlet temperature: ambient and 90°C. Phase I test runs were conducted from 5 August 1985 through 26 August 1985.

Phase II of the Pilot study consisted of 10 "optimization" test runs. The purpose of the optimization runs was fourfold: 1) to evaluate the effect on VOC removal efficiency of varying operating conditions beyond the limits set for Phase I of the investigation (i.e., maximum soil discharge temperature and maximum soil residence time); 2) to evaluate the VOC removal rate along the length of the unit; 3) to evaluate the VOC removal efficiency associated with three "duplicate" test runs to determine if the treatment was consistent and comparable; and 4) to evaluate the VOC removal efficiency associated with reprocessing treated soils that still contained a VOC residual. Phase II test runs were conducted from 27 August 1985 through 16 September 1985.

The data from the pilot investigation was statistically analyzed using multiple linear regression techniques. The objective of the analytical approach was to develop simple linear equations that would identify those input or controlled variables that had a greater significant impact on the response variable of concern; in this case, the concentration of total VOC's in the processed soils. The statistical analysis techniques were successful. Simple linear equations which were statistically significant were developed for design of a full-scale system operating at low, medium, or high soil discharge temperature.

Based on review of the data associated with all test runs, the following conclusions are presented:

1. The low temperature thermal shipping technology is an effective means of removing VOC's from soil.
2. VOC removal efficiencies associated with an elevated air inlet temperature are generally lower than those associated with an ambient air inlet temperature.
3. An exponential relationship exists between VOC concentrations in the processed soil and those input and control variables determined to have a significant contribution in the statistical analysis.
4. Correlations developed to predict the VOC concentrations in the processed soil and soil discharge temperature are site-specific and applicable to three distinct soil discharge temperature ranges. The validity of the correlations for different soil and contaminant types is questionable.
5. Moisture in the feed soil and residence time are statistically significant variables in all correlations (i.e., low, medium, and high soil discharge temperatures).

6. An organic vapor analyzer (OVA) can be utilized to estimate the VOC concentrations in the discharge air stream; however, the instrument manufacturer should be consulted to determine if the pump suction pressure is appropriate for the specific application.
7. A mobile mass spectrometer can be utilized to generate reliable qualitative information concerning VOC's in the discharge air stream. However, considerable attention needs to be given to sampling methods and quantitative instrument calibration.
8. Fugitive emissions of VOC's occurred from the time of excavation of soils to the time soils were fed to the thermal processor (estimated total VOC's fugitive emissions was 9.02 percent).
9. The low temperature thermal processor can be designed to achieve specific VOC clean-up objectives. The level of residual VOC's in the processed soil is a direct and predictable function of:

   (a) VOC concentration in the feed soil,
   (b) Processed soil temperature,
   (c) Soil residence time within the thermal processor,
   (d) Heat input rate to the thermal processor, and
   (e) Moisture content of the feed soil and processed soil.

   Depending on the VOC type and range of concentrations in the feed soil for a specific site, the other variables (i.e., processed soil temperature, residence time, heat input and moisture content) can be incorporated within the overall system design to achieve a wide range of target clean-up levels (i.e., 100 ppm, 10 ppm, 1 ppm, etc.). However, if the clean-up objective is "no detectable VOC's in the processed soils," then, based on this field demonstration program, a processed soil temperature of higher than 233°C and a residence time of over 90 minutes would be required.
10. Treatment is reproducible and comparable if feed soil composition/conditions are similar (i.e., moisture, VOC concentration).
11. Reprocessing of treated soils that still contained a contaminant residue reduced the VOC concentration significantly; however, a residual still existed.

12. Stack tests conducted during Test Runs 8, 9, and 10 indicated that no detectable levels of the principal organic hazardous constituents (POHC's) were present in the exhaust emissions (i.e., 100 percent destruction removal efficiency (DRE)).

13. Stack tests conducted during Test Runs 8, 9, and 10 demonstrated that particulate and hydrogen chloride emissions did not exceed regulatory limits during these test runs. (No comment can be made regarding other test runs as no stack testing was completed.)

2. INTRODUCTION

2.1 Background. Soils at several U.S. Army Material Command (AMC) installations have been contaminated with a variety of organic compounds as a result of past solvent handling practices. In many cases the contaminated soil has resulted in the degradation of underlying groundwater supplies.

In order to limit further contaminant migration, the U.S. Army Toxic and Hazardous Materials Agency (USATHAMA) is investigating technologies to effectively treat the contaminated soil. One treatment alternative is low temperature thermal stripping of volatile organic compounds (VOC's) from soil. A pilot study was conducted at the Letterkenny Army Depot (LEAD) near Chambersburg, Pennsylvania from 5 August 1985 to 16 September 1985 to determine the feasibility of this technology for future remedial action projects at Department of Defense (DOD) installations.

2.2 Purpose. The purpose of this report is to present the results and conclusions of a pilot investigation that evaluated the concept of low temperature thermal stripping of VOC's from soil. A description of test conditions and process equipment is contained herein.

2.3 Objectives of the pilot study. The primary objective of the pilot investigation was to determine the feasibility of the low temperature thermal stripping technology for future remedial action projects at DOD installations. Secondary objectives included:

(a) Determination of the impact of varying design parameters on system performance (e.g., operating temperature, residence time, air temperature, etc.).

(b) Determination of the optimum range of operational parameters for the pilot system.

(c) Identification of full-scale design criteria.

(d) Evaluation of the off-gas pollutant levels to determine if air pollution control devices are required for full-scale implementation of the process.

(e) Preparation of engineering cost estimates for application of this technology.

(f) Identification of any future research needs for system optimization.

2.4 Report organization. The information contained in this report has been organized into 13 sections:

Section	Title
1	Executive Summary
2	Introduction
3	Test Site
4	Description of the Process Equipment
5	Pilot Study Framework
6	Typical On-Site Activities
7	Experimental Variables
8	Sampling Techniques and Analytical Methods
9	Presentation of Data
10	Analysis of Results
11	Comparison of Test Results to Regulatory Criteria
12	Full-Scale Design Considerations
13	Conclusions and Recommendations

References cited throughout the report are provided in a separate listing at the end of the report.

The Appendices (Volume 2) provide additional data and analyses:

Appendix	Title
A	Organic Waste Characteristics of Site Soils at LEAD (determined during preliminary investigations)
B	Grain Size Gradation Curves Corresponding to Fill Soil and Native Soil
C	Air Sampling Techniques
D	Federal Regulations
E	Analytical Methods
F	Field/Analytical Data
G	Mass/Energy Balances
H	Supplemental Data
I	Statistical Analytical Approach

3. TEST SITE

3.1 Test site location and description. The pilot study was conducted at the Letterkenny Army Depot (LEAD). LEAD, formerly known as Letterkenny Ordnance Depot, consists of 7,899 hectares (nearly 20,000 acres) of land situated in the south-central section of Pennsylvania in Franklin County, near the city of Chambersburg. A site location map for the installation is presented in Figure 3-1.

LEAD was established on 7 January 1942 with the mission of ammunition storage. The present expanded mission of LEAD includes the receipt, storage, inventory, maintenance, and demilitarization of ammunition; the overhaul, rebuilding, and testing of wheeled and tracked vehicles; and the issue and shipment of Class III chemicals and petroleum.[1] Some facility operations have included cleaning and stripping, plating, lubrication, demolition, chemical and petroleum transfer and storage, and washout/deactivation of ammunition.[2]

The pilot study was conducted in the East Patrol Road Disposal Area (EPRDA). EPRDA is located east of California Avenue, south and west of East Patrol Road, and north of Building 370. Approximate locations of the excavation and processing areas are shown in Figure 3-2. The processing area was located approximately 300 feet north and 260 feet west of the excavation area. For illustration, an aerial photograph of the excavation and processing areas is shown in Figure 3-3.

3.2 Waste characteristics. Previous efforts have identified and quantified the contaminants present in the site soils at LEAD. Brief descriptions of past investigations are included in the following subsections.

3.2.1 LEAD remedial investigation and feasibility study (RI/FS). A field sampling and analytical program was completed by WESTON in early June 1983.[3] The purpose of the program was to define and quantify the levels of contamination which existed at seven potential hazardous waste disposal sites located in the EPRDA. The locations of the disposal sites are shown in Figure 3-4.

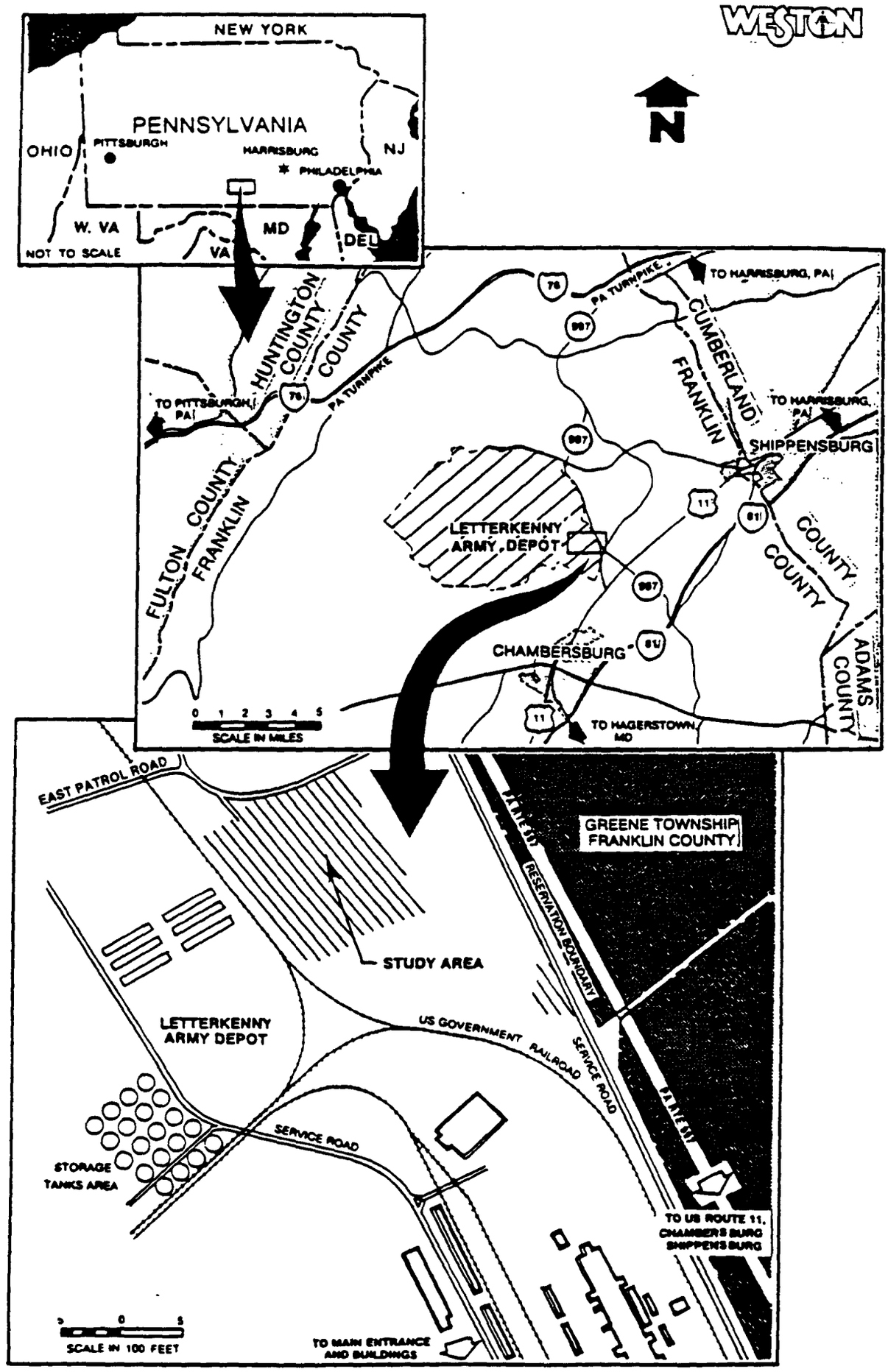

FIGURE 3-1 GENERAL LOCATION MAP OF THE STUDY AREA ON THE LETTERKENNY ARMY DEPOT, FRANKLIN COUNTY, PENNSYLVANIA

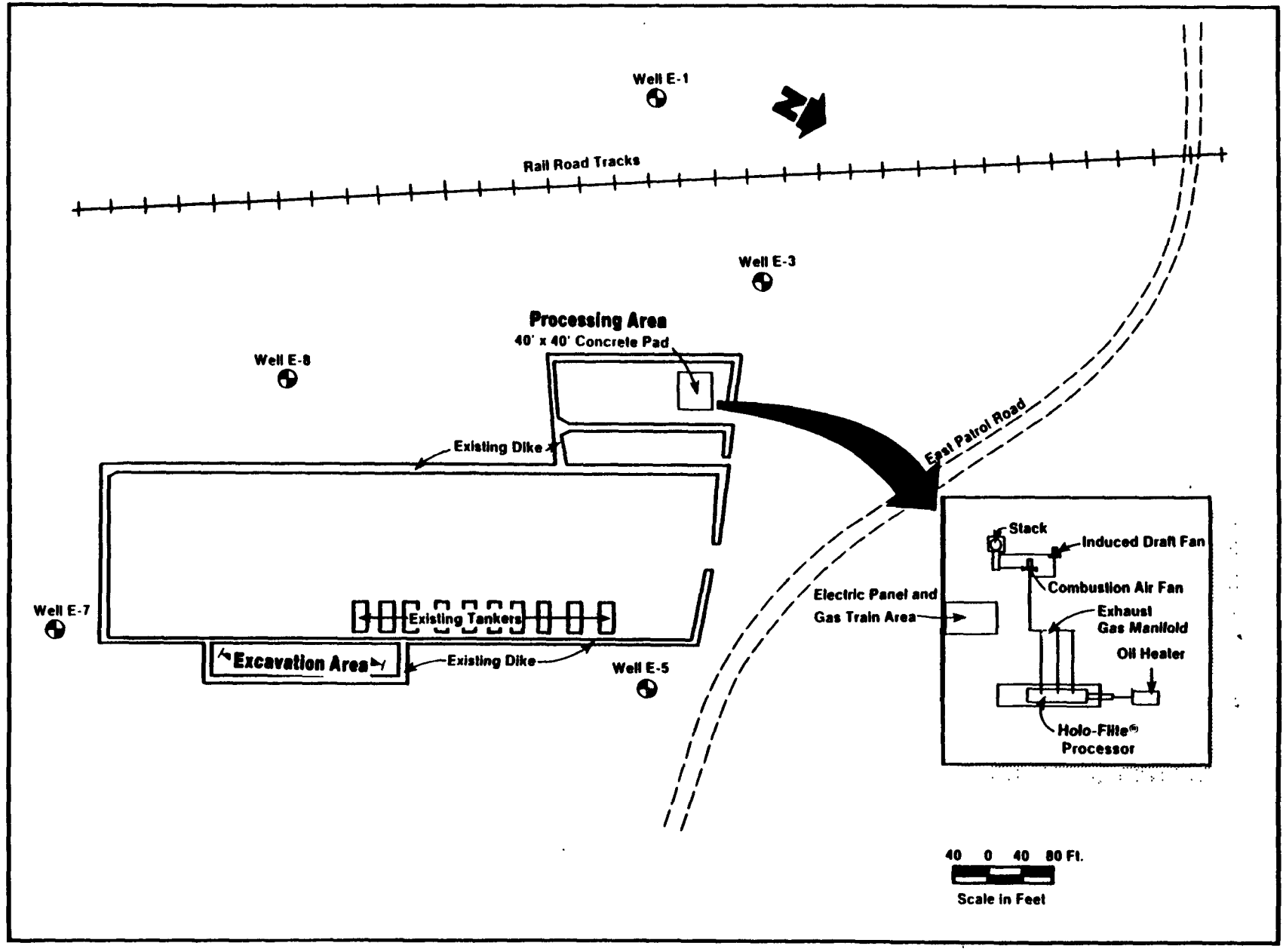

FIGURE 3-2 LOCATION MAP OF THE PROCESSING AND EXCAVATION AREAS ON THE LETTERKENNY ARMY DEPOT

FIGURE 3-3 AERIAL PHOTOGRAPH OF THE PROCESSING AND EXCAVATION AREAS ON THE LETTERKENNY ARMY DEPOT

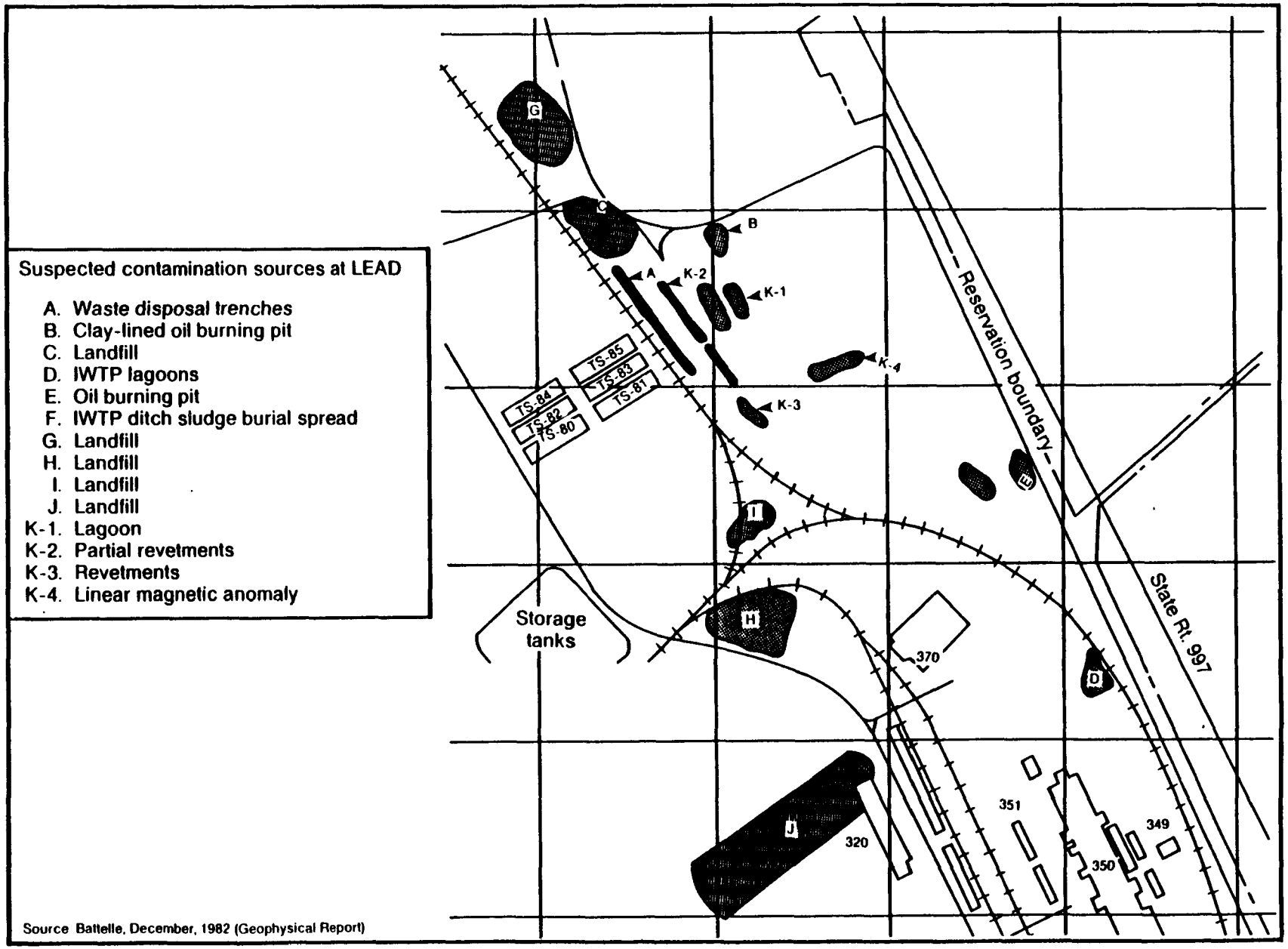

FIGURE 3-4 LOCATIONS OF POTENTIAL CONTAMINANT SOURCES
EAST PATROL ROAD DISPOSAL AREA, LETTERKENNY ARMY DEPOT

During the program, excavation trenches, excavation pits, and soil/waste borings were established on the EPRDA site in an effort to identify the vertical and horizontal extent of contamination. A 50-foot grid system was established over the seven potential waste disposal sites. At the intersection of grid lines, soil borings were drilled and samples collected at various depths from 1.5 feet to bedrock (approximately 25 feet). The field investigation determined that at least six major areas contained high levels of organic contamination and/or high levels of heavy metals. The field data further established that disposal of hazardous materials was not limited to definable areas of trenches, pits, and lagoons. Detailed organic results from the laboratory analysis of boring samples are contained in the referenced RI/FS report. For convenience, a summary table is included in Appendix A.

Based upon review of the type and extent of contamination found in the major areas, soils from Area K-1 were chosen for treatment in the pilot study. This selection was primarily based on the type, variety, concentration, and volatile nature of the compounds found in this area. Area K-1 is the site of two lagoons that were apparently used for disposal of organic liquids. The overall dimensions of the area were originally estimated to be 200 feet long by 50 feet wide, based upon a 1965 aerial photograph. The actual dimensions are not known; however, based upon trenching, the area is estimated to be at least 110 feet wide in some places. To further quantify and delineate the areas of contamination, a follow-up sampling and analysis program was completed in Area K-1 immediately prior to the pilot study.

3.2.2 Follow-up waste characterization of soils in area K-1. Based upon review of the laboratory analysis completed during the RI/FS, the soils in proximity to waste borehole 31 (WB-31), i.e., the most highly contaminated borehole, were selected for treatment in the pilot study. To further assess the lateral and vertical extent of contamination in this area, a field sampling program was conducted on 10, 11, and 12 June 1985. Eleven boreholes were drilled to a depth of 10 feet. Five composite soil samples per borehole were collected at various depths. The location of the boreholes, relative to WB-31, is

shown in Figure 3-5. All soil samples were analyzed for those volatile organic compounds (VOC's) listed on the Hazardous Substance List (HSL). A list of the VOC's contained on the HSL, as well as their detection limits, is provided in Appendix A. A list of those compounds determined to have been present, as well as the concentration ranges, is also contained in Appendix A. For convenience, a list of major compounds found is shown, along with maximum and average concentrations, in Table 3-1.

3.3 Site/soil characteristics.

3.3.1 Site characteristics. As stated in Subsection 3.2.1, Area K-1 is the site of two lagoons that were allegedly used for the disposal of organic liquids, as evidenced by the high concentrations of organic contaminants found in the soil. However, excavation operations conducted during the pilot study indicated that a wide variety of miscellaneous debris was also deposited at this site. Typically, at a depth of approximately 3 to 5 feet an assortment of miscellaneous objects were unearthed; i.e., brake drums, wire, bolts, metal washers, bottles, shell casings, rubble, and trash. In addition, based upon the recommendation of various LEAD personnel, late in the program site soils were tested for asbestos. Test analyses confirmed the presence of low levels of asbestos, probably due to past disposal practices.

3.3.2 Soil characteristics. The soil series for Area K-1 are classified as Urban Land. According to the Soil Conservation Service (SCS) of Franklin County, Pennsylvania, urban land is land that is so altered that identification of soils is not feasible. Included in this classification are areas that have been cut and filled with earthy and trashy material. This series generally consists of nearly level to sloping land that has been affected by urban development. Included in this unit are soils that have been cut and filled with earth and trash material.

Excavations in Area K-1 during the pilot study indicated that a gravelly sandy silt fill covered the surface to an approximate depth of 2 feet. From two to five feet below ground surface, miscellaneous fill material consisting of gray silty clay with sand, gravel, black ash, and metallic debris was encountered. Native soils varying from orange, brown sandy, gravelly plastic clays to slightly plastic clayey silts were generally observed between 5 to 7 feet. In addition, a perched water table was occasionally observed at the interface of the native soil and fill.

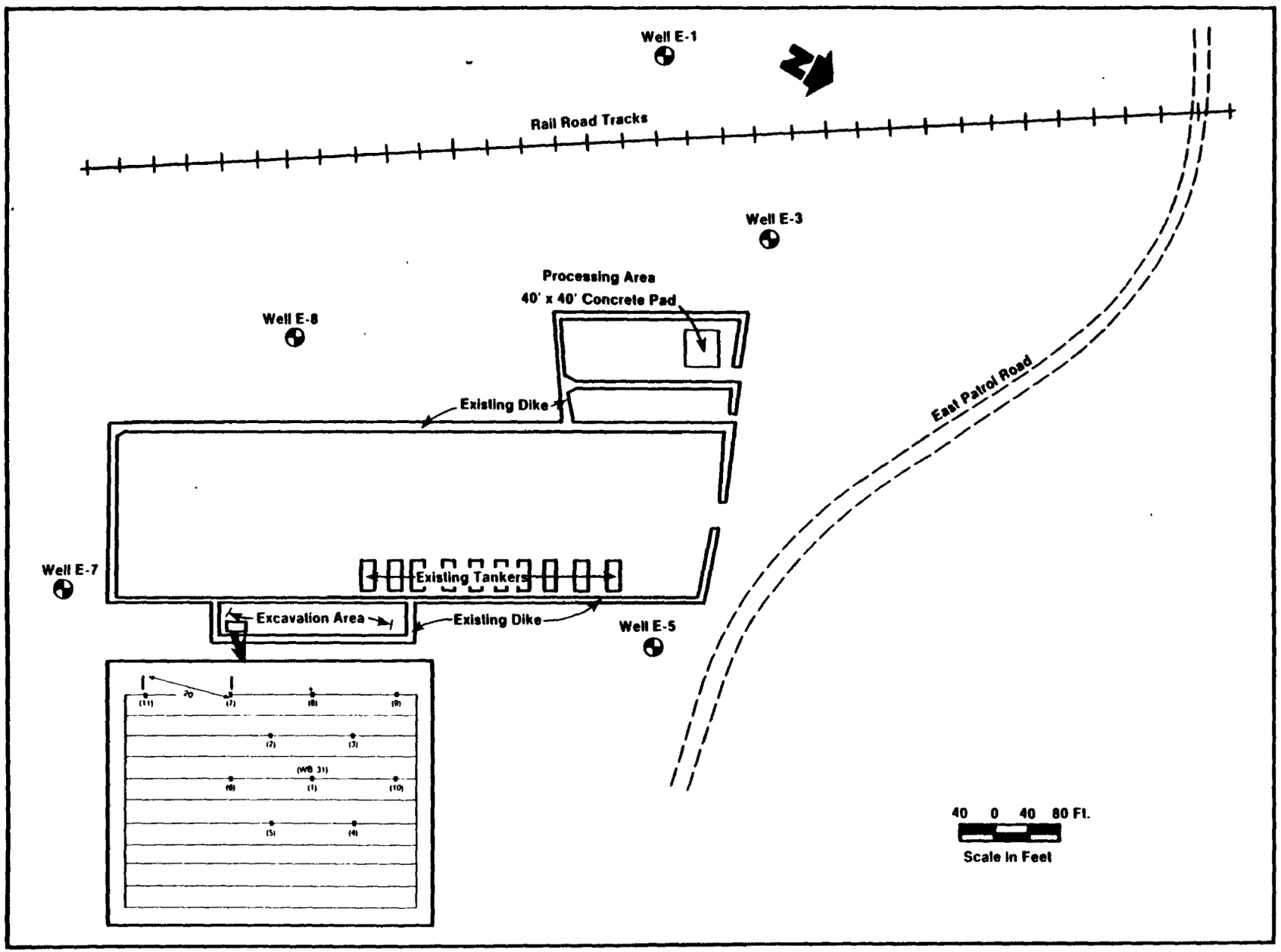

FIGURE 3-5 LOCATION OF SOIL BORINGS DRILLED IN AREA K-1 DURING THE WASTE CHARACTERIZATION PHASE OF THE PILOT STUDY

TABLE 3-1. CONCENTRATION RANGE OF VOC'S DETERMINED TO BE PRESENT IN AREA K-1 (BASED ON TESTING PERFORMED ON 10, 11, 12 JUNE 1985)

Volatile organic compound	Average concentration (ppm)	Maximum concentration (ppm)
1,2-Trans Dichloroethylene	115	>1,300
Trichloroethylene	222	>3,500
Tetrachloroethylene	95	>3,800
Xylene	7	47
Other VOC's (i.e., Chlorobenzene, ethylbenzene, Methylene Chloride, Toluene, Vinyl Chloride, C10-allyl Benzene, Dichlorobenzene, Methyl ethyl benzene, n-propylbenzene, Trimethyl benzene)	7	600

Previous soil borings conducted at Area K-1 Site indicated that these native fine-grained soils extended to a depth of approximately 22 to 27 feet below ground surface, where bedrock was encountered.

Two soil samples (fill, native soil) representative of soil types treated utilizing the low temperature thermal stripping technology were retained for sieve and hydrometer grain size analysis. Results of grain size analysis indicate the fill material consists of gravelly sands, and the native soil consists of sandy clay/sandy silt. These results are consistent with field observations documented during this study. Plotted grain size gradation curves for these two soil samples are retained in Appendix B of this report.

3.4 Environmental permitting. In the early stages of program development, representatives from USATHAMA and WESTON met with representatives from the U.S. Environmental Protection Agency (EPA) Region III and the Pennsylvania Department of Environmental Resources (PADER). At that time, background information concerning development of the thermal stripping process, selection of LEAD as the testing site, and technical details of the process and equipment were presented to the agencies for review. The point was emphasized that the pilot study was a generic research program and in no way a specific remedial action project for LEAD. The three areas that were identifed as having a potential environmental impact were air emissions, processed soil, and decontamination water.

3.4.1 Air emissions. The main area of concern in the pilot study centered on the issue of air emissions. The proposed process design included treatment of the off-gases in an afterburner operating at a minimum temperature of 1,000°C (1,832°F) and a residence time of greater than 2 seconds.

Theoretically, the proposed afterburner system would be sufficient to affect the thermal destruction of the VOC's in the off-gases. However, to demonstrate the efficiency of the afterburner the agencies agreed that stack gas sampling would be conducted at a selected low, medium, and high VOC-inlet loading condition. PADER was subsequently supplied with a copy of the test plan[4] describing the proposed test runs, detailed technical aspects of the process equipment, and proposed sampling methods.

The test plan was reviewed by the Air Quality Control Section of PADER. Upon review, PADER raised no objections to the execution of the pilot investigation. In view of the relatively short duration of the pilot study, PADER determined that the process was exempt from permitting requirements.

3.4.2 Disposal of the processed soils. Originally, the test plan submitted to PADER dictated disposal of the processed soils in a licensed hazardous waste disposal facility. However, upon review of the test plan, the Solid Waste Management Section of PADER granted approval to redeposit the processed soils at the excavation area from which they were originally removed. The basis for this decision was twofold. First, the U.S. Army will be completing full scale cleanup measures in the future. This remedial action will address all site soils. Second, the thermal stripping process does not render the processed soil more hazardous than the soil in its original state. In fact, application of this technology should result in reduced concentrations of VOC's.

3.4.3 Disposal of the decontamination water. Originally, the water generated during decontamination of personnel and equipment was to be collected for proper disposal at the LEAD industrial wastewater treatment plant. However, the Solid Waste Management Section of PADER granted approval to redeposit the decontamination water at the excavation and processing site. The primary reason for approval was that all site soils will be addressed in future remedial actions.

4. DESCRIPTION OF THE PROCESS EQUIPMENT

The concept of low temperature thermal stripping essentially couples two removal mechanisms:

(a) Removal by thermal volatization, and
(b) Removal by aeration.

To determine the singular effect of these removal mechanisms, two types of equipment were used for the pilot study:

(a) A thermal processor to determine the effects of thermal volatization, and
(b) An aeration unit to evaluate the aeration effects.

The thermal processor was a pilot-scale piece of equipment that was able to continuously process from 100 to 265 pounds of soil per hour, depending on soil residence times. Test conditions were varied using the thermal processor, and an extensive soil and air sampling program was completed. The aeration unit, on the other hand, was strictly a bench-scale piece of equipment able only to process a batch of 10 pounds of soil per test. A less rigorous testing and sampling program was conducted on the aeration unit. As such, an "apples-to-apples" comparison of the two pieces of equipment is not valid since the evaluation of each unit was not equal. Therefore, the aeration unit will be evaluated as a bench-scale investigation in a separate report. This document will evaluate only the pilot-scale thermal processor.

4.1 Thermal processing system. The thermal processor is an indirect heat exchanger which is commonly used to heat, cool, or dry bulk solids, slurries, pastes, or viscous liquids. In the pilot test application, the thermal processor was used to heat and consequently dry contaminated soil. The net effect of heating the soil was to evaporate volatile contaminants from the soil. A carrier gas (i.e., air) was introduced to the unit to enhance contaminant removal. An illustration of the thermal processing system is presented in Figure 4-1. A description of each component of the thermal stripping process is contained in the following subsections.

4.1.1 Feed soil system. Depending upon the desired soil residence time, the soil feed rate varied throughout the pilot investigation. However, the cycle feed rate (i.e., weight of soil per loading cycle) remained constant. Approximately 10 pounds of soil per loading cycle were fed to the unit at regular intervals. An air-tight rotary valve mechanism was used to introduce soil to the thermal processor. A schematic of the feed soil system is shown in Figure 4-2.

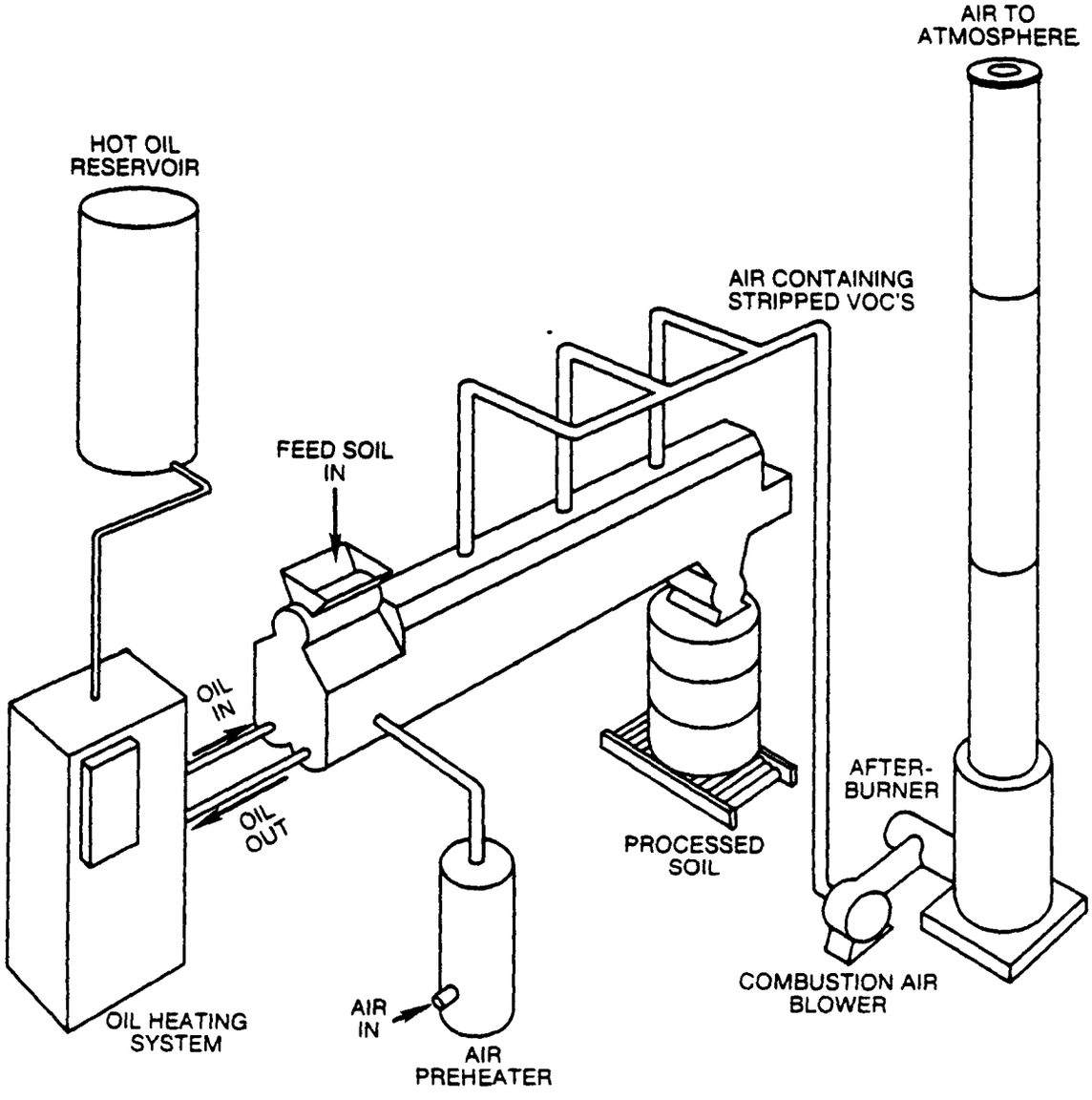

Figure 4-1. Thermal processing system.

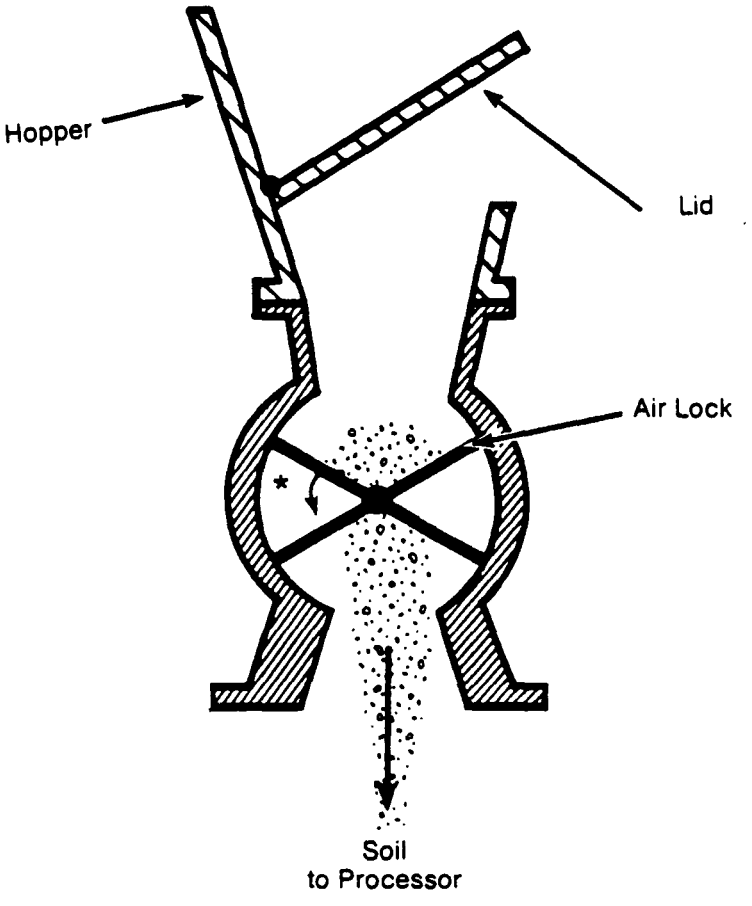

*Note: During each feed cycle the rotary valve would rotate 180° in the direction shown.

FIGURE 4-2 SCHEMATIC OF ROTARY VALVE FEED MECHANISM

The rotary valve assembly was housed in a feed hopper that was equipped with a safety latch. The valve was not operational unless the hopper lid was in the closed position. The soil was loaded into an empty cavity of the rotary valve. As required, the loading operator manually activated the valve switch. The valve slowly rotated 180°, discharging the soil into the front end of the processor. As the rotary valve was of symmetrical construction (two of the six vanes were removed to facilitate feeding), upon rotation an empty cavity was positioned in the upright position, ready for the next loading cycle.

As shown in Figure 4-2, the vanes of the valve maintained a constant air lock, even during rotation. This air lock was used to prevent air from being drawn into the system and fugitive emissions from escaping into the atmosphere. Fugitive emissions were further prevented by constantly maintaining a negative pressure within the thermal processor.

4.1.2 Thermal processor. The thermal processor consisted of a jacketed trough which housed a double-screw mechanism. The Holo-Flite[R] screws were seven inches in diameter and ran the entire length of the trough. The screw shafts and flights were hollow to accommodate circulation of the heat transfer liquid (i.e., hot oil). The oil flowed through the flights in a direction cocurrent to the movement of the soil. The oil entered the unit at the soil feed end of the processor, circulated through the flights, and flowed back through the shaft to exit the unit at the same end that it entered. An internal view of the thermal processor is shown in Figure 4-3.

The trough jacket also circulated hot oil, providing additional heat exchange with the soils being processed. The side clearance between the screws and the trough was 1/2-inch and the bottom clearance was 3/4-inch. The screws were driven at various rotational speeds via a chain drive connected to the gear reducer located beneath the conveyor. The continuous action of the screws promoted forward movement of the soil through the trough. The screws were set in the trough so that the flights of the two screws meshed with each other to break up the soil and improve heat transfer.

The area above the twin screws was covered by a hood as shown in Figure 4-3. The hood was equipped with three vertical plates that extended from the top of the hood to within a small clearance of the twin screws. The plates separated the head space in the unit into three equally sized sections. One air exhaust port was connected to each section to facilitate removal of vapors via three exhaust lines.

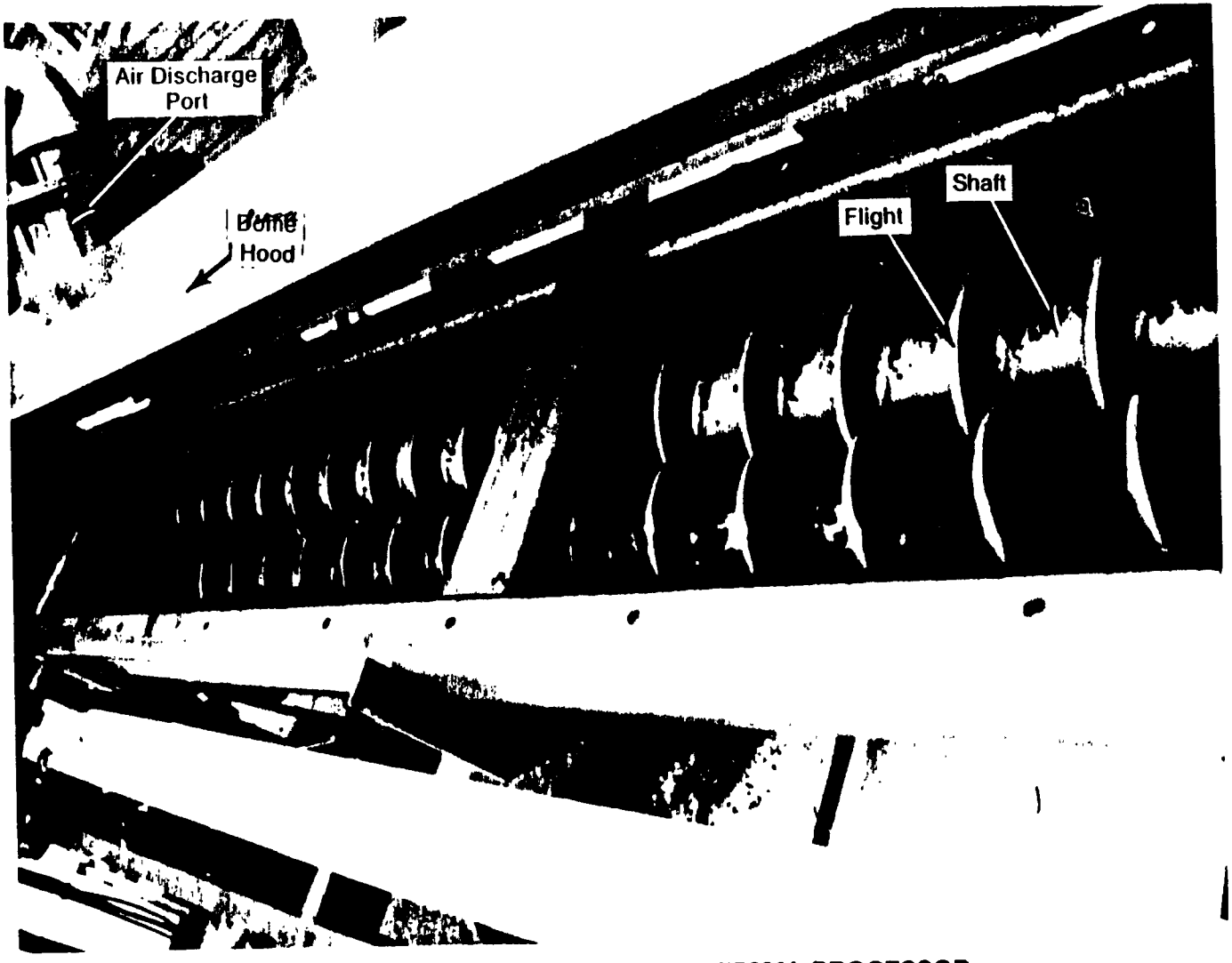

FIGURE 4-3 INTERNAL VIEW OF THERMAL PROCESSOR

The processsor used during the evaluation was a pilot-scale unit; larger units are available. Full-scale processors are equipped with a variety of options. Four screw sizes are available (i.e., 7-, 12-, 16-, and 24-inch diameter). The screws vary in length from 10 feet to 24 feet, depending on the screw diameter. The processor is fabricated with either one, two, or four screws per unit. A variety of drive arrangements are available to alter the screw speed to meet individual requirements.

Although various screw and trough arrangements are available, the side and bottom clearances between the flights and trough remain fixed at 1/2-inch and 3/4-inch, respectively, regardless of screw size. If jamming problems are anticipated and larger clearances are required, the unit must be specially fabricated (i.e., flights are machined down to the desired diameter). For informational purposes, no jamming problems were encountered with the screws and trough during the pilot study. Efforts were made to screen out large objects; however, occasionally oversized items were inadvertently fed to the processor and exhibited no adverse effects (with the screws and trough). Also, during a dry run with uncontaminated soil, the hood was allowed to remain open, and the operation of the unit was observed. Large objects, purposely fed to the unit, merely straddled the top of the flights. No jamming problems were experienced.

4.1.3 Processed soil handling system. The discharge end of the Holo-Flite® processor incorporated an air-tight rotary valve mechanism, similar to that used in the feed system. For illustration, a photograph of the soil discharge gate is shown in Figure 4-4. The valve mechanism was motor-driven and was in continuous operation while the screws were rotating. The air lock sealed the unit from air infiltration and prevented excessive dust generation inherent in the dry processed soil.

The continuous discharge of soil was collected in open top 55-gallon drums. A fabric shroud and sealing band around the top of the processed soil drum minimized fugitive dust emissions. The drums were situated on a roller conveyor to facilitate their removal and replacement.

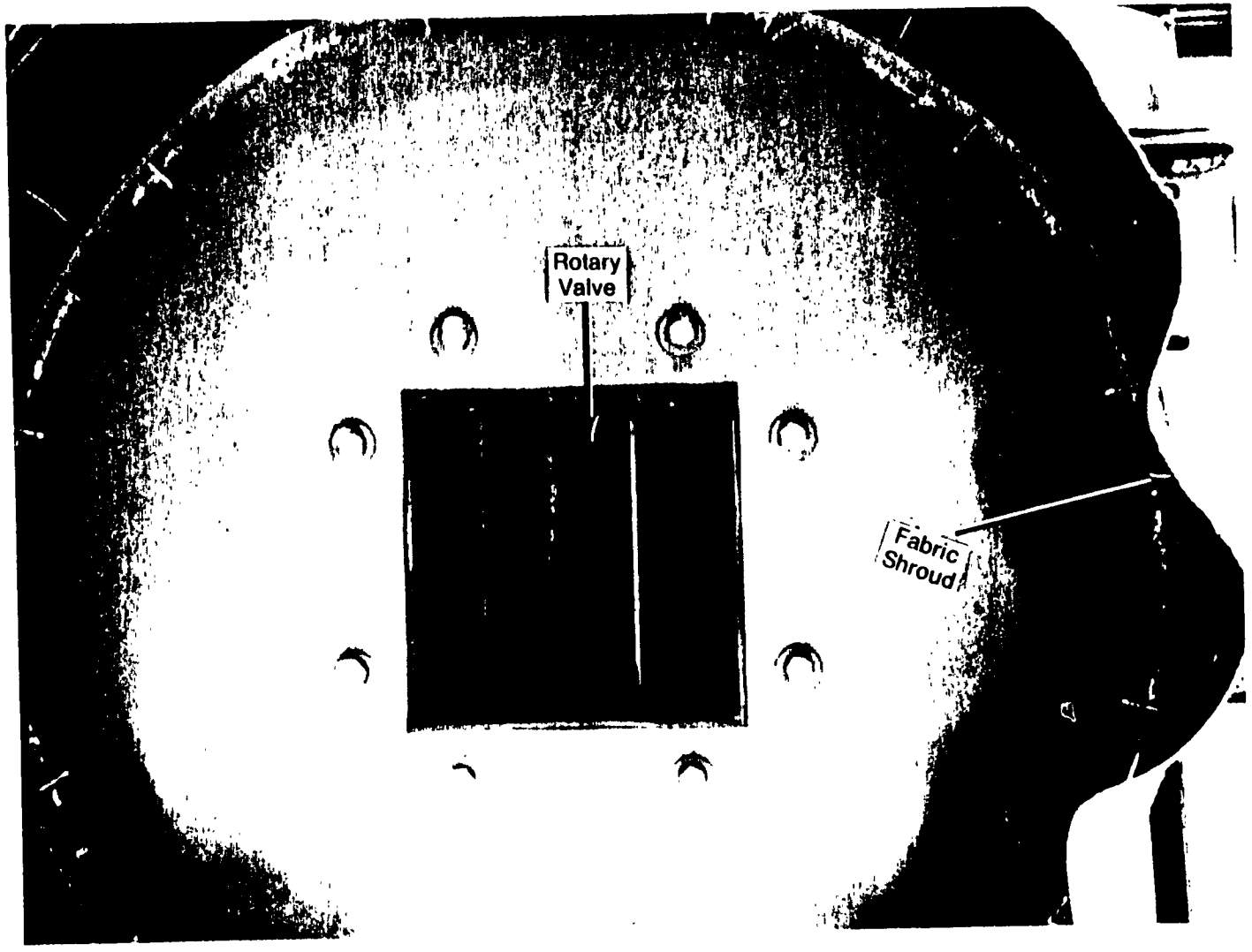

FIGURE 4-4 SOIL DISCHARGE GATE

4.1.4 Hot oil system. The source of heating fluid for the thermal processor was a Chromalox Type COS Hot Oil Heat Transfer System: Model COSX-650-80, rated at 80 kilowatts at 480 volts. The heat exchange fluid was Monsanto Therminol 66, which had a temperature range of ambient to 315°C (600°F).

The system was self-contained and consisted of an oil reservoir, heater element system, temperature control system, expansion tank, high temperature pump, controls, and steel housing.

The hot oil for a given test was delivered via piping and valving to each of the Holo-Flite® screws and subsequently to the thermal processor trough.

4.1.5 Air systems. A carrier gas (i.e., air) was circulated through the unit to enhance contaminant removal. The air passed through a preheater and entered the thermal processor at a controlled temperature. Once inside, the air stream was forced to travel a tortuous path by flowing through the divided sections of the processor. Off-gases were removed through three ports located in the hood of the processor, as shown in Figure 4-5. The three-leg manifold combined into a main header. An induced draft fan was located downstream of the header and provided the motive power to induce air flow through the system. A brief description of the individual components of the air system is contained in the following subsections.

4.1.5.1 Air inlet system.

4.1.5.1.1 Air preheater. A Chromalox Process Heater (Model GCH-60905-E4) was used to raise the temperature of the process air during selected test runs. The electrical resistance heater was rated at 9 kilowatts at 480 volts. It was equipped with a temperature control system that enabled the temperature of the air to be heated from ambient to approximately 90°C (200°F).

4.1.5.2 Off-gas system.

4.1.5.2.1 Air manifold system. The gases generated and drawn through the thermal processor were removed through the three ports located in the hood. Each leg of the manifold system contained an air orifice for balancing air flows as well as individual ports for off-gas sampling. The manifolds fed into a main header which had its own test port. The main header was ducted to the entry of the induced draft fan.

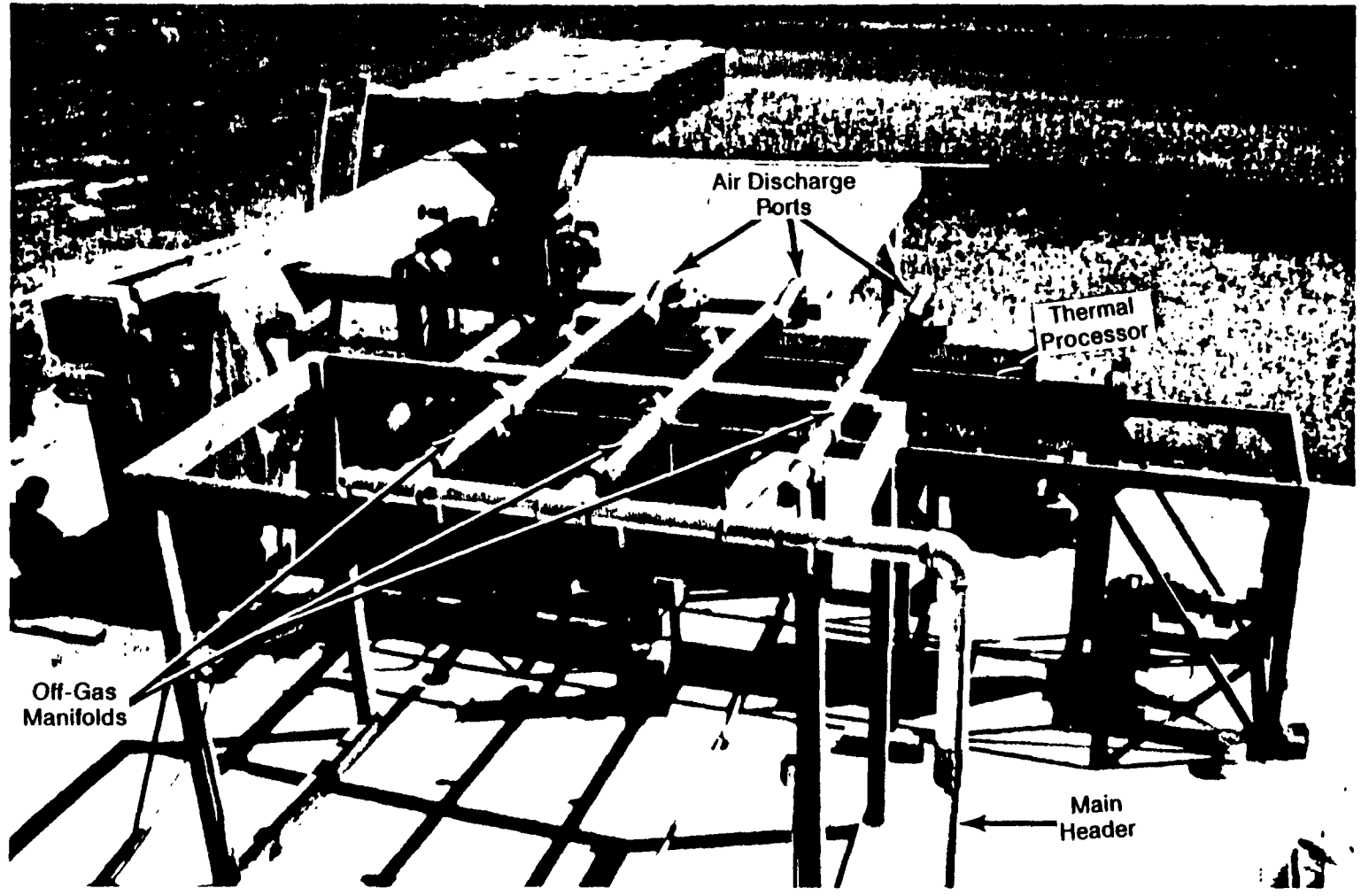

FIGURE 4-5 OFF-GAS DISCHARGE LINES

4.1.5.2.2 Damper. The main header contained a damper to regulate the flow of air through the thermal processor. In the fully open position, approximately 200 dry standard cubic feet per minute (dscfm) of air flowed through the system. The minimum air flow, corresponding to a nearly closed position, was approximately 75 dscfm.

4.1.5.2.3 Induced draft fan. An induced draft fan was located downstream of the manifold system. It provided the motive power to induce air flow through the system. The discharge of the fan was fed directly into the afterburner and served as combustion air.

4.1.6 Emission control system.

4.1.6.1 Afterburner. The afterburner operated at a minimum temperature of 1,000°C (1,832°F) and a residence time of greater than two seconds. The afterburner was propane-fired using a North American burner rated at 1.5 x 10 million British thermal units per hour (Btu/hr). Safety controls on the burner included a combustion air pressure switch, gas low pressure switch, gas high pressure switch, burner safety control system, low fire switch, and ultraviolet (UV) flame safety.

4.1.6.2 Refractory-lined stack. The refractory-lined stack was 18 inches in diameter and 20 feet high. It housed two thermocouples: the first for controlling burner temperature and the second for a system high temperature alarm.

4.1.6.3 Propane System. Two propane tanks were available to provide fuel for thermal destruction of the VOC's. The propane was piped directly from the tanks to the gas train of the afterburner system.

4.1.7 Electrical supply. A diesel-fired generator supplied electrical power during the pilot investigation. The generator was rated at 250 kilowatts and supplied 115/480 volt power to the process equipment.

5. PILOT STUDY FRAMEWORK

The pilot study was completed in two phases. Phase I consisted of 18 test runs completed to evaluate the effect on VOC removal efficiency by varying the following operating conditions:

(a) Soil discharge temperature,
(b) Soil residence time, and
(c) Air inlet temperature.

The 18 "base case" test runs were designed in a matrix format to investigate three levels of soil discharge temperature: 50°C, 100°C and 150°C; three levels of soil residence time: 30 minutes, 45 minutes, and 60 minutes; and two levels of air inlet temperature: ambient and 90°C. Phase I test runs were conducted from 5 August 1985 through 26 August 1985.

Upon completion of Phase I of the pilot study, an additional 10 "optimization" runs were completed as Phase II of the pilot investigation. The purpose of the optimization test runs was fourfold:

(a) Test Runs 19, 20, 21 - To evaluate the effects on VOC removal efficiency by extending the soil residence time and soil discharge temperature to values beyond those investigated in Phase I of the pilot study, i.e., 75 and 90 minutes and maximum soil discharge temperature. Also, to monitor the discharge air in the three legs of the manifold system to determine the contaminant removal trends.
(b) Test Runs 22, 23 - To evaluate the effects on VOC removal efficiency by extending the soil residence time while maintaining a soil discharge temperature that was evaluated in Phase I of the Pilot Study, i.e., 150°C. Also, to monitor the discharge air in each leg of the manifold system to determine the contaminant removal rates.
(c) Test Runs 24, 25, 26 - To evaluate the "reproducibility" of treatment associated with three test runs with exact "steady state" conditions, i.e., fixed soil residence time, soil discharge temperature, and air inlet temperature.

(d) Test Runs 27, 28 - To evaluate the VOC removal efficiency associated with "reprocessing" soils that were already processed but, due to operating conditions that were less than optimum, still contain a VOC contaminant residual.

Phase II test runs were conducted from 27 August 1985 through 16 September 1985. Table 5-1 provides a schedule of the test run dates for both phases of the study, as well as the process variables that were controlled during each test run. The schedule of test runs, as well as the corresponding operating conditions, are listed in Table 5-1.

TABLE 5-1. SUMMARY OF TEST RUN MATRICES AND CONTROLLED TEST VARIABLES - PHASE I AND PHASE II TEST RUNS

Test run	Test run date	Matrix no.	Target soil resi-dence time (minutes)	Target soil discharge temper-ature (°C)	Target air inlet temper-ature (°C)
A. Phase I - Base Case Test Runs					
8	8/13/85	1-1	30	50	ambient
16	8/23/85	1-2	30	100	ambient
15	8/21/85	1-3	30	150	ambient
3	8/7/85	1-4	45	50	ambient
6	8/10/85	1-5	45	100	ambient
14	8/20/85	1-6	45	150	ambient
1	8/5/85	1-7	60	50	ambient
17*	8/24/85	1-8	60	100	ambient
13	8/19/85	1-9	60	150	ambient
7	8/12/85	2-1	30	50	90
9	8/14/85	2-2	30	100	90
12*	8/17/85	2-3	30	150	90
18	8/26/85	2-4	45	50	90
4	8/8/85	2-5	45	100	90
11	8/16/85	2-6	45	150	90
2	8/6/85	2-7	60	50	90
5	8/9/85	2-8	60	100	90
10	8/15/85	2-9	60	150	90

*Used soils from previous day's excavation.

TABLE 5-1
(continued)

Test run	Test run date	Matrix no.	Target soil resi-dence time (minutes)	Target soil temper-ature (°C)	Target air inlet temper-ature (°C)
B. Phase II - Optimization Test Runs					
19	8/27/85	-	60	210	90
20*	8/28/85	-	90	210	90
21	8/29/85	-	75	210	90
22	9/4/85	-	60	150	90
23*	9/5/85	-	90	150	90
24	9/12/85	-	60	50	ambient
25*	9/13/85	-	60	50	ambient
26*	9/14/85	-	60	50	ambient
27	9/15/85	-	60	max	ambient
28	9/16/85	-	90	max	ambient

*Used soils from previous day's excavation.

6. TYPICAL ON-SITE ACTIVITIES

On 22 July 1985 Canavan Technologies, Inc., the equipment subcontractor, began installation of the process equipment. The pilot-scale thermal processor, as well as support equipment and piping, was delivered to the test site on a single flat bed truck. Installation was completed and the entire system was fully operational in ten days. The official testing program began on 5 August 1985 and continued through 16 September 1985. A description of the typical daily routine, as well as project closure activities, is contained in the following subsections. For illustration, the daily schedule of on-site activities is presented in Figure 6-1.

6.1 Daily routine. Typically, the regular test crew consisted of the following personnel:

(a) Site engineer (1).
(b) Process equipment operator (1).
(c) Safety officer (1).
(d) Excavation technicians (2).
(e) Materials handling technician (1).
(f) Air sampling technicians (2).
(g) Backhoe operators (2).

Under special circumstances (e.g., stack sampling), additional personnel were required on site.

6.1.1 Pretest activities.

6.1.1.1 Equipment startup and stabilization. Each morning at approximately 6:30 a.m., the process equipment operator arrived on site for equipment startup and stabilization. To comply with the adopted safety protocol (i.e., a minimum of two persons required on site at all times) the backhoe operators arrived simultaneously. The equipment operator cleaned the UV sensor and spark plug prior to igniting the afterburner. The afterburner temperature was gradually brought up to 1,800°F. Depending upon the selected test run conditions for the thermal processor, the equipment operator gradually increased the oil temperature to the appropriate setpoint.

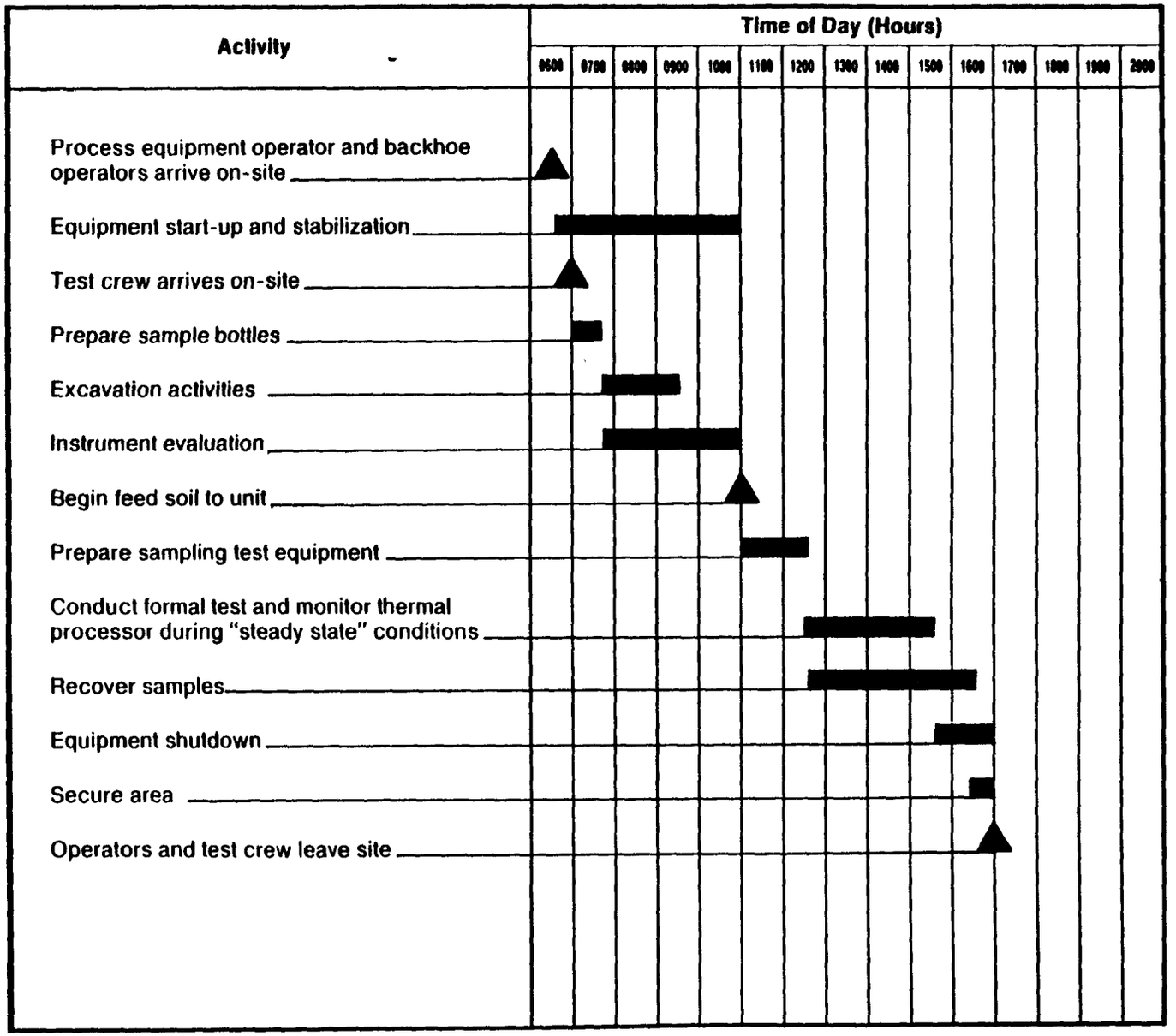

FIGURE 6-1 TYPICAL SCHEDULE OF DAILY ON-SITE ACTIVITIES

If the test run conditions called for preheated air, the equipment operator set the air heater to the maximum setpoint (i.e., 90°C). To accommodate the desired soil residence time, the speed of the screws was adjusted to the appropriate setpoint. Also, as a routine practice, the orifice plates in the three off-gas manifolds were removed and cleaned prior to introducing soil to the unit.

6.1.1.2 Excavation activities. The site engineer, safety officer, and excavation team normally arrived on site at 7:00 a.m. to commence excavation activities. The first order of business was "suiting up" to enter the designated "hot zone." All personnel involved in activities in the hot zone were required to wear level C safety gear. This included disposable Saranex® coveralls, steel toe/steel shank boots, surgical under gloves, neoprene outer gloves (duct taped to the coveralls), outer booties (duct taped to the coveralls), hardhats and full-face respirators equipped with cartridges designed for VOC removal.

The backhoe operator generally began excavation between 8:00 - 8:30 a.m. In order to isolate contaminated soils, an organic volatile analyzer (OVA) was used to monitor the head space in each backhoe bucket of soil. Only those soils that exhibited a head space concentration of at least 50 parts per million (ppm) total VOC's were selected for treatment during the pilot study. Typically, sufficiently contaminated soil was found at a depth of 3 feet and continued through a depth of 5 to 6 feet. Once sufficient VOC concentrations were detected by the OVA, the contaminated soil was deposited in a separate pile and the teeth of the backhoe bucket were used to break up large clumps of soil.

The excavation technicians shovelled approximately 10 to 15 pounds of contaminated soil into 5-gallon capacity metal pails. Each pail was provided a metal top, equipped with a rubber seal, to inhibit fugitive emissions during storage and transportation. Typically, 100 to 120 pails were loaded daily. In order to collect a sample that was representative of the excavated soil, a scoop of soil was removed from each pail and deposited into a separate bucket designated for collection of a composite soil sample. The sample pail was stored on ice in an insulated cooler to inhibit fugitive VOC losses. The composite sample of excavated soil was used to identify and quantify the VOC's in the soil as well as to determine moisture content. The composite sample was thought to be representative of the excavated soils since a portion of soil from each pail was used during collection of the sample.

As the pails were filled, sampled, and secured, they were loaded into the bucket of the spare backhoe (designated for use in the "cold zone"). The backhoe operator extended the bucket of the backhoe over the "hot zone" boundary to facilitate loading. Once loaded, the pails were transported to the processing area. When sufficient soil for a full day of operation was loaded into the pails, the top soil was redeposited into the trench. At the completion of excavation activities, the excavated trench dimensions were approximately 4 feet wide, 8 feet long, and 5 to 6 feet deep. After the top soil was placed in the trench and the area was regraded, the location for the next day's excavation was identified. The backhoe was normally moved 10 feet north to dig another trench, parallel to that day's excavation. If sufficient concentrations of VOC's were present in the soil head space, the trench was refilled and the backhoe remained in place for the next day's excavation. If sufficiently contaminated soil was not found, the backhoe operator would continue with exploratory trenches until "hot soil" was identified.

All personnel working in the hot zone were required to decontaminate (i.e., "decon") before exiting the designated hot zone boundaries. The decon procedure included the following chronologically ordered steps:

(a) Outer boot wash/rinse.
(b) Outer glove wash/rinse.
(c) Hardhat and respirator removal.
(d) Outer boot duct tape removal.
(e) Outer glove duct tape removal.
(f) Outer boot removal.
(g) Outer glove removal.
(h) Saranex removal.
(i) Inner glove wash/rinse.
(j) Inner glove removal.

All contaminated clothing was collected for proper disposal by LEAD.

6.1.1.3 Instrument evaluation. The air sampling technicians normally arrived on site at 7:00 a.m. to conduct an evaluation of selected instruments. The purpose of the instrument evaluation was to determine the accuracy and reliability of portable field instruments for detecting VOC's in soil. The following instruments were included in the evaluation:

(a) Century OVA.
(b) HNu 101.

(c) AID 590 OVM/GC.
(d) Photovac TIP.

The air sampling technician monitored the head space above contaminated soils using the subject instruments. The soils used in the evaluation were the excavated and feed soils from the previous day's test run. The VOC concentrations detected by each instrument were recorded for comparison to VOC concentrations detected by laboratory obtained gas chromatograph/mass spectrometer (GC/MS) to determine if a correlation existed. A more detailed description of the instrument evaluation, as well as results and conclusions, is included in a separate report, (Report No. AMXTH-TE-CR 86073).

6.1.1.4 Materials handling.

6.1.1.4.1 Feed soil. As previously mentioned, the excavated soils were transported to the processing area in sealed pails placed in the bucket of a backhoe. The materials handling technician unloaded the pails, weighing and recording their weight. All pails were stored on the loading platform. The volume of soil in a "typical" pail was recorded, as well as its weight, to determine the feed soil density. When the process equipment (thermal processor and afterburner) was stabilized and the appropriate operating conditions were maintained, the materials handling technician began feeding contaminated soil to the thermal processing unit.

6.1.1.4.2 Processed soil. The drums of processed soil from the previous day's test run were weighed each morning. In addition, the volume occupied by the soil was recorded to determine its density.

6.1.1.5 Sampling equipment. Sample containers were prepared and labelled prior to each test run. In addition, the air sampling technicians set up the appropriate test equipment required for sample collection and monitoring.

6.1.2 Test activities. The test run was officially underway when the system was stabilized and soil was discharging from the unit at the appropriate temperature. The soils processed before the system was stabilized were collected in 55-gallon drums. When the system stabilized, the drum was removed, and an empty drum was placed at the soil discharge gate to collect soils treated under official test conditions. A brief description of test activities is included in the following subsections.

6.1.2.1 Feeding soil to the processor. As each pail was opened, a scoop of soil was removed and deposited in a separate composite sample bucket. The sample bucket was stored on ice in an insulated cooler to inhibit fugitive emissions of VOC's. The technician filled the empty cavity of the rotary valve with soil, removing large rocks, metal objects, etc. Depending on the soil residence time, loading cycle times varied. At the appropriate time, the rotary valve switch was activated, the valve rotated 180°, and the soil was introduced to the unit. The same procedure was repeated for every loading cycle. From the beginning to the end of each formal test run, the materials handling technician sampled each pail of soil fed to the unit.

6.1.2.2 Air sampling activities. Air monitoring and sampling of the thermal treatment system off-gases were conducted during the formal test run. Sampling equipment was installed at the following locations during appropriate test runs to monitor parameters:

(a) Air temperatures (processor inlet, off-gas manifold, afterburner inlet, discharge stack);
(b) Air flow rates (processor inlet, off-gas manifold, afterburner inlet, discharge stack);
(c) Gross VOC concentrations (processor inlet, off-gas manifold, afterburner inlet);
(d) Specific VOC concentrations (off-gas manifold, afterburner inlet discharge stack); and
(e) Moisture content (afterburner inlet discharge stack).

A description of parameters, sampling techniques, and analytical methods are included in Section 7.

6.1.2.3 Processed soils. At the beginning of each formal test run, an empty drum was placed at the soil discharge gate to receive the treated soils. Sampling devices were placed in the drums to collect composite samples of the processed soils. Two members of the excavation team monitored the level of soil in the drum, changed the drum as required, and regularly monitored the soil discharge temperature.

6.1.3 Post-test activities. The formal test run usually lasted for 2 to 3 hours. Depending upon weather conditions and equipment upsets, some test runs were of shorter duration. A brief description of activities that occurred upon completion of the test run is included in the following subsections.

6.1.3.1 Equipment shutdown. The materials handling technician introduced approximately 100 pounds of coarse sand to the processor to purge the system of residual soil. Simultaneously, the equipment operator decreased the temperature control settings on the afterburner, oil heater, and, as required, process air heater.

6.1.3.2 Sample collection. The composite samples of the excavated, feed, and processed soils were split into the appropriate sample bottles. Forty-milliliter volatile organic analysis (VOA) bottles were filled with each soil type for analysis by GC/MS. As a precaution, duplicate samples were retrieved. In addition, five 100-milliliter bottles were filled with each type of soil for analysis by the field instruments used in the instrument evaluation phase of the program.

6.1.3.3 Securing the area. At the end of each day, the entire processing area was rinsed down using a high pressure water sprayer. When the process equipment was cooled down to the appropriate temperatures, the diesel generator was shut down and all personnel evacuated the site.

6.1.4 Miscellaneous activities. Twice a week a runner picked up the samples as well as chain-of-custody forms for delivery to the WESTON Laboratory in Lionville, Pennsylvania.

6.2 Project closure activities.

6.2.1 Excavation area. As discussed in Subsections 3.4 and 3.4.1, PADER approved backfilling of processed soils in the excavation area. A backhoe was used to excavate a trench, 4 feet deep, 4 feet wide, and approximately 40 feet long. The processed soil drums were tipped over and the soils were dumped into the trench. As the processed soils were extremely dry, dust generation was likely. To minimize dust production, the LEAD Fire Department was on site during the dumping operation. A water tanker was used to supply a fine mist of water over the trenched area. The entire excavation area was regraded and the berm fully restored upon completion of the pilot study.

6.2.2 Processing area.

6.2.2.1 Equipment removal. As previously mentioned, low levels of asbestos were determined to be present in some soils selected for treatment in the pilot study. The processing equipment was purged of residual soil; however, as a precaution, the equipment was decontaminated according to government regulations on asbestos. A copy of the specific regulations is included in Appendix D. (Chapter 27, Occupational Safety and Health Administration (OSHA) 29 CFR 1910.1001 and Chapter 1, EPA 40 CFR Part 61, Subpart B).

Process equipment decontamination was completed by American Asbestos Control Company. A tent was built around the processor and associated piping. All surfaces of the equipment and piping were vacuumed through a high-efficiency particulate air (HEPA) filter, wire brushed, and washed down according to regulations. All materials generated during the decontamination were bagged, placed in 55-gallon drums, and labeled "Asbestos." LEAD transported and disposed of the materials. Upon completion of the pilot study, processing equipment and all support materials were removed from the test site.

The backhoes and miscellaneous equipment were decontaminated using detergent, scrub brushes, and a high-pressure water sprayer.

Wastewaters from the decontamination of equipment were not collected for disposal. Based on the approval of the Solid Waste Section of PADER (as discussed in Subsection 3.4.3), decontamination waters were disposed of in the processing area.

7. EXPERIMENTAL VARIABLES

The variables of the pilot study were classified as follows:

(a) Independent variables: those variables impractical to control and allowed to vary randomly throughout the tests. No attempts were made to modify or control independent variables.
(b) Control variables: those variables with values selected and maintained during test operations.
(c) Response variables: those variables with values that were a function of the selected operating conditions.

Table 7-1 provides a summary of test variables associated with the thermal processor. A brief discussion of the variables is included in the following subsections.

7.1 Independent variables. As shown in Table 7-1, there were two independent variables associated with the pilot study system. These independent variables were the soil feed composition/conditions (i.e., VOC concentrations, moisture content and temperature) and the air inlet composition/conditions (i.e., VOC concentrations, moisture content, and ambient temperature).

7.1.1 Feed soil composition/conditions. One goal of the pilot investigation was to determine the capability of the system to treat actual contaminated soils. Therefore, the composition/conditions of the soils in Area K-1 were not altered prior to being introduced to the processor.

7.1.1.1 Volatile organic concentrations. As demonstrated by previous sampling programs, the variety of volatile organic compounds and associated concentations in the soils varied with location, depth, and soil type. Composite samples were collected at the excavation site, as pails were being filled, and at the processing site as soil was being fed to the unit. The composite soil samples were collected at two separate times and locations in order to estimate the amount of VOC's that escaped in the form of fugitive emissions.

7.1.1.2 Moisture content. The moisture content of the site soils was a function of local weather conditions and adsorption properties of the soil.

TABLE 7-1. SUMMARY OF TEST VARIABLES FOR THE THERMAL PROCESSOR

A. INDEPENDENT VARIABLES

Feed Soil Composition/Conditions

- VOC Concentrations
- Moisture Content
- Temperature

Air Inlet Composition/Conditions

- VOC Concentrations
- Moisture Content
- Ambient Temperature

B. CONTROL VARIABLES

Held Constant At All Levels

- Soil Excavation
- Soil Preparation
- Soil Discharge Handling
- Air Flow Rate

Held Constant At Various Levels

- Soil Discharge Temperature/Heating Oil Conditions
- Soil Residence Time
- Air Temperature at Inlet
- Feed Soil Rate

C. RESPONSE VARIABLES MEASURED

Processed Soil Composition/Conditions

- VOC Concentrations
- Moisture Content
- Mass Flow Rate

Air Discharge Composition/Conditions

- VOC Concentrations
- Moisture Content
- Temperature

7.1.1.3 Temperature. Feed soils were excavated and stored in sealed metal containers at the processing area. The temperature of the feed soil varied with ambient conditions.

7.1.2 Air inlet composition/conditions.

7.1.2.1 Volatile organic concentrations. Various operations involving the contaminated soils (i.e., feeding the unit, monitoring the soil discharge temperature, etc.) took place during process unit operations. Therefore, the potential existed for trace concentrations of fugitive VOC's to be present in the influent air stream. Routine monitoring for gross VOC concentrations in the ambient air was conducted over test runs.

7.1.2.2 Moisture content. The moisture content of the air stream varied with local weather conditions, time of day, etc. The moisture content was regularly monitored during test operations.

7.1.2.3 Ambient temperature. The temperature of the ambient air varied with the local weather conditions, time of day, etc. The ambient temperature was routinely monitored.

7.2 Control variables. A schedule of test runs is presented, as well as the corresponding control variables, in Table 5-1.

7.2.1 Control variables held constant at all levels. As shown in Table 7-1, there were four control variables which were held constant at all times during the pilot study. These control variables were the soil excavation, soil preparation, soil discharge handling, and air flow rate.

7.2.1.1 Soil excavation. A backhoe was used to excavate the soils. In order to locate highly contaminated soils, an OVA was used during the excavation. The OVA was used as a screening tool to ensure that soils contained detectable levels of volatile organic compounds to be processed. Typically soils containing at least 50 ppm total VOC's were selected for treatment. Approximately 10 to 15 pounds of soil were loaded into each pail. Generally, 100 to 120 pails were filled each day (approximately 1,500 pounds of soil).

Originally, excavation of soils was to take place on a daily basis to avoid the excessive loss of VOC's from the soils. However, based upon monitoring of the head space in selected pails, it was obvious that minimal VOC losses occurred if the soil was stored for more than one day. On those occasions where sufficient soil was excavated for two test runs, the excavation did not occur on the following day of processing. The process runs that utilized soils from the previous day's excavation were Runs 12, 17, 20, 23, 25, and 26.

A composite sample was taken of all soils immediately prior to being fed to the unit. Therefore, even if minimal VOC losses occurred from overnight storage, the appropriate concentration would be reflected in the feed soil sample.

7.2.1.2 Soil preparation. As previously mentioned, sufficient soil for at least one full day of operation was excavated and stored in sealed, five-gallon capacity metal containers. The soil containers were sampled, sealed, and manually loaded into the bucket of a backhoe for transportation to the processing area. The backhoe was required to travel only a short distance (i.e., approximately 300 feet north and 260 feet west), as shown on Figure 3-2. The truck route was confined to the installation boundaries. At the time of processing, the pails were opened, sampled, and fed to the unit.

7.2.1.3 Processed soil handling. At the beginning of each test run, an empty 55-gallon drum was placed below the soil discharge gate. Only those soils that represented treatment under stable test conditions were collected for sampling. At the end of the test run, or when the drum was full, the processed soil drum was removed and the composite soil samples were deposited in a separate pail. The sample pail was stored on ice in an insulated cooler until the processed soil was split into the appropriate sample bottles.

7.2.1.4 Air flow rate. Originally, the air flow rate was to remain fixed at 200 cubic feet per minute (cfm). However, preliminary field tests raised concerns over the amount of dust and particulate that would be generated by an air flow rate of 200 cfm. As no precautions were being taken to prohibit particulate from discharging to the atmosphere, the air flow rate was decreased to 100 cfm. (Test Runs 27 and 28 evaluated reprocessing soils that had already been treated but still contained a contaminant residue. Since the treated soils were relatively dry, the potential for excessive dust generation existed. Therefore, the air flow rate was decreased to 75 cfm during these test runs).

7.2.2 Control test variables held constant at various levels. In order to evaluate the economic feasibility of using a thermal processor for low temperature thermal stripping of soils contaminated with volatile organic compounds, three variables emerged as key factors. These variables consisted of the soil discharge temperature, soil residence time, and air inlet temperature. The test runs included various levels for each of these test variables, as discussed in the following subsections.

7.2.2.1 Soil discharge temperature/heating oil conditions. The thermal processor was an indirect heat exchanger. As such, the heating medium never actually contacted the soil medium. Rather, heat exchange was by conduction through the flights, shafts, and trough of the processor. The only means of controlling the temperature of soil, therefore, was to control the temperature of the oil. The circulating oil could be heated from ambient up to a maximum temperature of 315°C (600°F). Phase I test runs evaluated three soil discharge temperatures: 50°C (122°F), 100°C (212°F), and 150°C (302°F). Phase II test runs also included evaluation of the maximum attainable soil discharge temperature.

7.2.2.2 Soil residence time. The test plan indicated that three soil residence times would be maintained during various runs in Phase I of the pilot study. The three soil residence times were originally 20 minutes, 40 minutes, and 60 minutes. However, field tests indicated that a minimum residence time of 30 minutes was required to achieve the desired soil discharge temperature of 150°C. Therefore, the soil residence times evaluated during the Phase I base case test runs were changed to 30 minutes, 45 minutes, and 60 minutes. Extended soil residence times of 75 and 90 minutes were evaluated during Phase II of the pilot investigation. These values were selected based on the minimum rotational speed of the screws, i.e., maximum residence time. The slowest screw speed corresponded to approximately 90 minutes residence time. The 75 minute residence time was chosen as a mid-point value.

7.2.2.3 Air temperature at inlet. Two inlet air temperatures were evaluated during the pilot investigation: ambient air temperature and approximately 90°C (200°F). The elevated temperature was maintained using an electrical resistance heater.

7.2.2.4 Soil feed rate. The processor was fed sufficient soil to maintain a constant level in the trough (i.e., 2/3 full). This constant volume corresponded to the following mass feed rates: 300 #/hr, 225 #/hr, 150 #/hr, 125 #/hr, and 100 #/hr for 30 minute, 45 minute, 60 minute, 75 minute, and 90 minute residence times, respectively.

7.3 Response variables measured. The response variables measured during the pilot investigation were the soil discharge composition/conditions and the air discharge composition/conditions.

7.3.1 Processed soil composition/conditions.

7.3.1.1 VOC concentrations. The volatile organic compound concentrations varied at all points throughout the thermal processor. However, interest pertained primarily to the processed soil. Therefore, composite samples of the discharge soil were collected and analyzed for volatile organic compounds.

7.3.1.2 Moisture content. Treatment in the thermal processor reduced the moisture content of the soils. To determine the amount of moisture that evaporated, the processed soils were sampled and analyzed for moisture content.

7.3.1.3 Mass flow rate. The volatile organic compounds and moisture evaporated in the processor; therefore, the mass of soil entering the unit was not the same as the mass of soil discharging the unit. To determine the approximate mass of compounds removed as a vapor, the soil leaving the unit was weighed.

7.3.2 Air discharge composition/conditions. The off-gas manifolds were monitored and sampled for VOC concentrations, moisture content, and temperature.

7.3.2.1 VOC concentrations. During Phase I test runs, the three exhaust air manifolds were monitored separately to detect the concentration of total VOC's. A portable field instrument was used to monitor the gross VOC concentrations. In addition, the common header was continuously sampled using a modified Volatile Organic Sampling Train (VOST) for analysis by the WESTON Laboratory. The continuous sample was analyzed using GC/MS techniques to identify and quantify VOC's in the air stream. During Phase II test runs, VOCs were monitored using a portable field instrument at the afterburner inlet (Test Runs 19 through 23) and manifold 2 (Test Runs 25 through 28). Modified VOST was also used at each leg of the off-gas manifold (Test Runs 19 through 23).

7.3.2.2 Moisture content. The moisture in the soil evaporated in the thermal processor, exiting as vapor in the air discharge stream. To determine the amount of moisture that existed in the unit, the moisture content of the air stream was routinely monitored.

7.3.2.3 Temperature. The temperature of the air stream changed as it travelled through the processor. Therefore, the air temperature was monitored at the air heater outlet at each exhaust port as well as at the common header port.

8. SAMPLING TECHNIQUES AND ANALYTICAL METHODS

A brief discussion of the techniques used to sample the soil and air streams, as well as the laboratory methods used to analyze the samples, is contained in the following subsections. An instrumentation diagram showing the location of measuring devices is included in Figure 8-1.

8.1 Field sampling techniques.

8.1.1 Soil sampling techniques. A list of the soil parameters that were monitored and/or sampled for analysis is contained in Table 8-1. As shown, five parameters were monitored or sampled for in the field: temperature, mass feed rate, density, moisture content, and those VOC's on the Hazardous Substance List (Appendix A).

8.1.1.1 Temperature. The temperatures of the feed and processed soils were monitored using a chromel/alumel thermocouple and sampling device fabricated specifically for that purpose. An illustration of the sampling device is shown in Figure 8-2.

An open-top carbon steel sample container was used to hold the soils being monitored. Approximate dimensions of the sample cup were 3 inches long by 3 inches wide by 2 inches high. A carbon steel handle was welded to the side of the box to facilitate soil collection. A small hole was drilled into the side of the sample box, just above the handle, for insertion of the thermocouple. The thermocouple was wired to a multi-point calibrated digital pyrometer for accurate reading of temperature.

The temperature of the feed and processed soils were monitored and recorded every 30 minutes. When monitoring the temperature of the feed soil, the sampling device was fully submerged into a pail of feed soil. The thermocouple was allowed to stabilize and the associated temperature was recorded. When monitoring the temperature of the processed soils, the sample cup was placed directly under the discharge soil gate. To allow the container to come to an equilibrium temperature with the soil, the sample container was filled with soil exiting the unit, and the contents were dumped into the processed soil drum. The cup was refilled, sufficient time elapsed for the thermocouple to stabilize, and the temperature was recorded. For quality control purposes, the entire procedure was repeated.

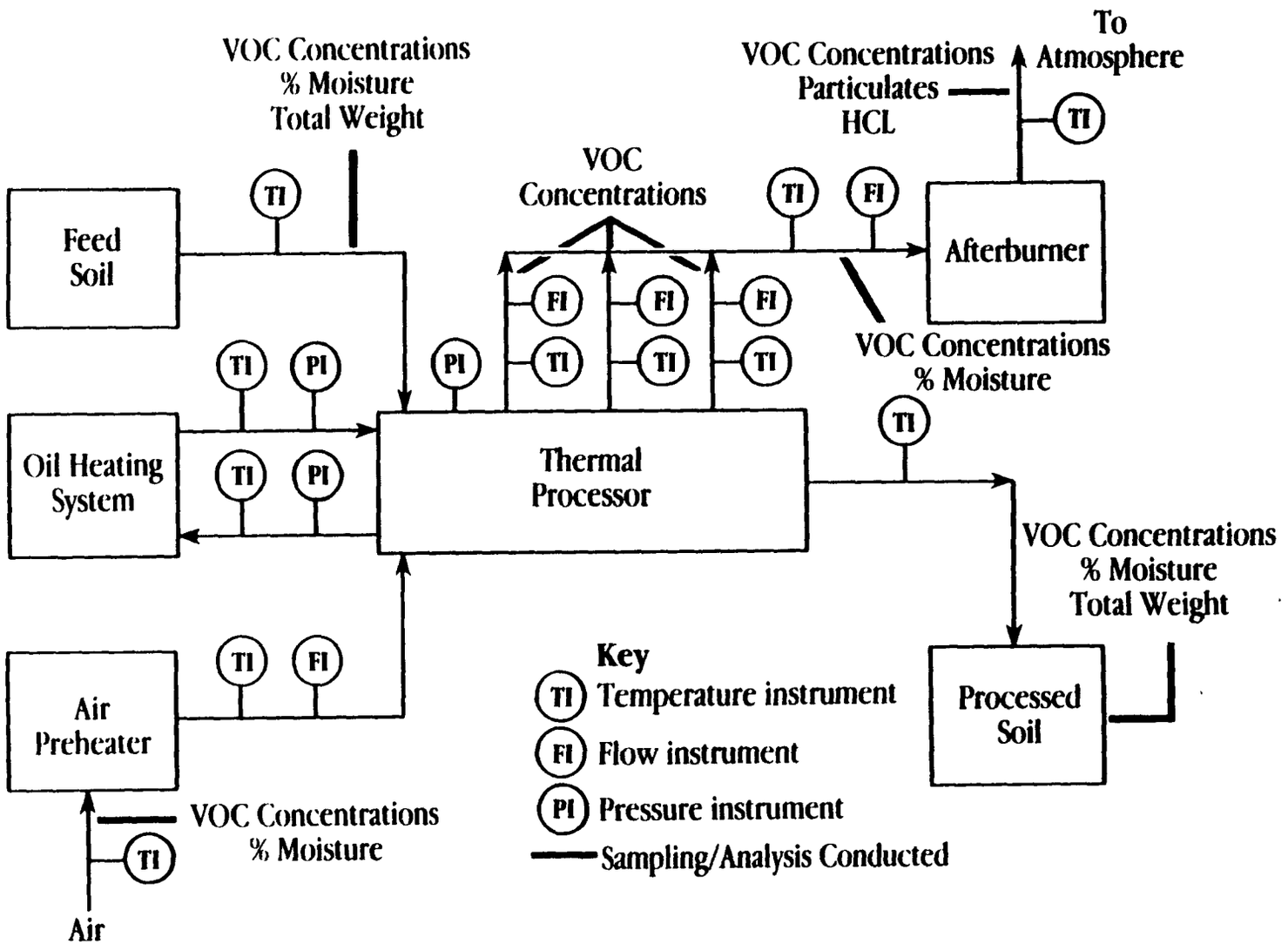

FIGURE 8-1 THERMAL PROCESSING SYSTEM INSTRUMENTATION AND SAMPLING/ANALYSIS DIAGRAM

TABLE 8-1. PARAMETERS MONITORED AND/OR SAMPLED FOR IN SOILS

1.	Temperature	-	Feed Soil Processed Soil
2.	Mass Feed Rate of Soil	-	Feed Soil Processed Soil
3.	Density	-	Feed Soil Processed Soil
4.	Moisture Content	-	Excavated Soil Feed Soil Processed Soil
5.	VOC's	-	Excavated Soil Feed Soil Processed Soil

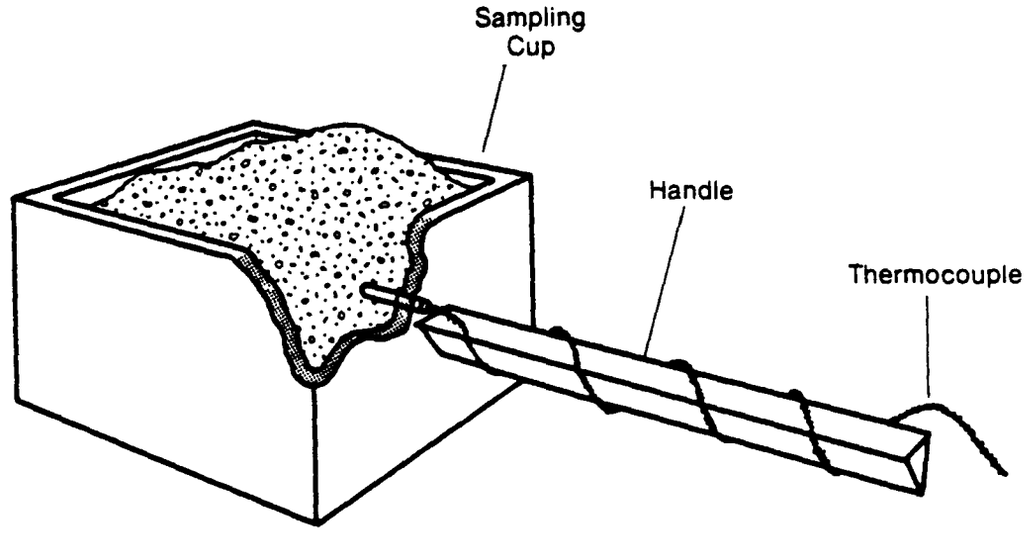

FIGURE 8-2 SAMPLING DEVICE USED TO MONITOR SOIL TEMPERATURE

8.1.1.2 Mass feed rate of soil. The weight of each pail of feed soil was recorded prior to being loaded into the thermal processor. The mass feed rate of soil was determined using the total weight of soil divided by the duration (in hours) of the test run. The weight of the processed soils was also recorded to determine the mass feed rate of the processed soil.

8.1.1.3 Density. The weight and volume of soils, both feed and processed, were monitored and recorded to determine the associated soil density.

8.1.1.4 Moisture content. A 40-milliliter VOA vial was filled for each type of soil (i.e., excavated, feed, and processed), for determination of the moisture content. The vials were stored on-site until delivery to the WESTON Laboratory for analysis.

8.1.1.5 VOC's. A 40-milliliter VOA vial was filled with a composite soil sample of the excavated, feed, and processed soils to be analyzed for those VOC's on the Hazardous Substance List. Sample collection was conducted at the end of each test run. The soil samples were stored on ice until delivery to the WESTON laboratory.

8.1.2 Air sampling techniques. A list of the test locations for each test run, as well as the parameters for which samples were collected is shown in Table 8-2. A detailed discussion of the air sampling techniques is contained in Appendix C. A brief discussion follows.

8.1.2.1 Testing locations. Sample test ports were installed at the following four locations: (1) process air inlet, (2) each leg of the off-gas manifold, (3) the afterburner inlet, and (4) the afterburner stack. The test port locations were in compliance with EPA Method 1[5].

8.1.2.2 Testing equipment and methodology. Following equipment set-up, the air sampling technicians compiled preliminary test data at all source locations. Geometric flue measurements were recorded and pitot tube traverses were performed to determine the presence/absence of cyclonic flow.

TABLE 8-2. AIR SAMPLING PARAMETERS MEASURED IN THE FIELD FOR EACH TEST LOCATION

Test run	Parameter	Location: Process air inlet	Off-gas manifold	After-burner inlet	After-burner stack
Phase I - Base case test runs					
1-7	Flow	X	X	X	
	Temperature	X	X	X	
	Moisture	X		X	
	Total VOC's	X	X		
	Specific VOC's			X	
	Fixed Gases*	X	X	X	
	Particulate				
	Hydrochloric Acid				
8-10	Flow	X	X	X	X
	Temperature	X	X	X	X
	Moisture	X		X	X
	Total VOC's	X	X		
	Specific VOC's			X	X
	Fixed Gases*	X	X	X	X
	Particulate				X
	Hydrochloric Acid				X
11-18	Flow	X	X	X	X
	Temperature	X	X	X	X
	Moisture	X	X		
	Total VOC's	X	X		
	Specific VOC's			X	
	Fixed Gases*	X	X	X	
	Particulate				
	Hydrochloric Acid				

*Fixed gases are CO_2, O_2, and CO.
**No continuous emissions monitoring (CEM) due to faulty instrument.

TABLE 8-2. (CONTINUED)

Test run	Parameter	LOCATION: Process air inlet	Off-gas manifold	After-burner inlet	After-burner stack
Phase II - Optimization Test Runs					
19-23	Flow	X	X	X	X
	Temperature	X	X	X	X
	Moisture	X		X	
	Total VOC's	X		X	
	Specific VOC's		X		
	Fixed Gases*	X	X	X	
	Particulate				
	Hydrochloric Acid				
24	Flow	X	X	X	X
	Temperature	X	X	X	X
	Moisture	X		X	
	Total VOC's**				
	Specific VOC's				
	Fixed Gases*	X	X	X	
	Particulate				
	Hydrochloric Acid				
25-28	Flow	X	X	X	X
	Temperature	X	X	X	X
	Moisture	X		X	
	Total VOC's		X		
	Specific VOC's				
	Fixed Gases*	X	X	X	
	Particulate				
	Hydrochloric Acid				

*Fixed gases are CO_2, O_2, and CO.
**No continuous emissions monitoring (CEM) due to faulty instrument.

Simultaneous testing was performed at the process air inlet, each leg of the off-gas manifold, and the afterburner inlet during the first 23 test runs. In addition, concurrent compliance tests were performed at the afterburner discharge stack during a selected low, medium, and high VOC-inlet loading condition (i.e., Test Runs 8, 9 and 10, respectively). Testing protocols followed for each parameter measured are summarized in Table 8-3.

8.1.2.2.1 Flow. Standard pitot tubes were used in conjunction with inclined manometers to measure the flow at the process air inlet and afterburner inlet. Air flow in the legs of the off-gas manifold was measured via orifice plates; magnahelics were used to measure the associated orifice plate pressure differentials. Air flow at the afterburner discharge stack was determined using a modified EPA Method 5 Train.[5]

8.1.2.2.2 Temperature. The temperatures of the appropriate air streams were monitored using chromel/alumel thermocouples placed alongside the pitot tubes or orifice plates. The thermocouples were wired to a multi-point calibrated pyrometer for accurate digital readout.

8.1.2.2.3 Moisture content. The process air and infiltration air were assumed to be the same as ambient air. The moisture content of the ambient air was measured using a sling psychrometer and associated psychrometric chart. The moisture content at the afterburner inlet was measured using an EPA Method 4 sampling train.[5] The moisture content at the discharge stack was determined using a modified EPA Method 5 sampling train.[5]

8.1.2.2.4 VOC's.

8.1.2.2.4.1 VOC's in off-gas manifold system. Three sampling techniques were used to monitor the VOC concentration in the air discharge stream: 1) continuous emissions monitoring (CEM) system; 2) mobile mass spectrometer; and 3) modified VOST. A brief description of sampling techniques is contained in the following subsections.

8.1.2.2.4.1.1 Total VOC's by continuous emissions monitoring (CEM) system. Total VOC concentrations in air were measured at the processor inlet during each test run; at each leg of the off-gas manifold for Test Runs 1 through 18; at the afterburner inlet for Test Runs 19 through 23; and at manifold

TABLE 8-3. TESTING PROTOCOLS FOR AIR SAMPLING

Parameters measured	EPA reference methods[5]
Air Temperature, Volumetric Flow, and Mass Rate	EPA 1, 2 (modified by using centerpoint velocities)
Fixed Gases (CO_2, O_2, and CO) Concentration	EPA 3 (stack only)
Moisture Concentration	EPA 4 (sling psychrometer at process inlet)
Volatile Organic Compounds Concentration	
Total VOC by CEM	EPA 25A (modified by using PID monitor for runs 1-11)
Specific VOC by Modified VOST	WESTON designed
Specific VOC by VOST	EPA 600/8-84-007, March 1984
Particulate and Hydrogen Chloride Concentration and Mass Rate	EPA 5 (modified by replacing impinger solutions with 0.1 N NaOH analyzed for hydrochloric acid by standard methods)

2 for Test Runs 25 through 28. The CEM system measured gross VOC concentrations in the linear range from 1 to 600 ppm (by volume, dry basis) relative to the calibration gas (benzene). Benzene was chosen as the calibration gas instead of one of the major contaminants (i.e., dichloroethylene or trichloroethylene). This selection was based on the following rationale:

(a) One of the major uses of portable VOC detectors is during site assessment (i.e., identification and quantification of contaminants). On these occasions, the major contaminants are unknown; therefore, it is not possible to pre-calibrate the instrument with a contaminant of concern. A common calibration gas that is readily available (such as benzene) would be used on these sites.

(b) Benzene, a common calibration gas, is stored as a stock item by suppliers. Specialty gases such as dichloroethylene or trichloroethylene, however, are made to order and, as such, typically require one month leadtime.

(c) Specialty gases such as dichloroethylene or trichloroethylene are more expensive than readily available gases such as benzene (typical costs: cylinder of 10 ppm dichloroethylene in air - $280; cylinder of 10 ppm benzene in air - $128).

(d) The stability of specialty gases such as dichloroethylene or trichloroethylene in air are questionable. The supplier suspects that the concentration of dichloroethylene or trichloroethylene would decrease over time.

Gross VOC concentrations were measured using an AID Model 590 volatile organics monitor/GC (photoionization detector with 10.0 eV lamp) for Test Runs 1 through 11, and a Century Model 128 volatile organics monitor/GC (Flame ionization detector) for Test Runs 12 through 23 and 25 through 28. The total VOC concentrations were not monitored during Test Run 24 due to a faulty instrument. The total VOC concentrations were recorded using a Molytek single channel recorder.

8.1.2.2.4.1.2 Total VOC's by mobile mass spectrometer. A Bruker MM1 mobile mass spectrometer was on-site on 6, 8, and 9 August 1985. The MM1 was used to qualitatively identify VOC's in the discharge air stream. Authentic standard compounds were used to mass calibrate the MM1. Manifolds 1, 2, and 3 were sampled with the MM1 during Test Runs 2, 4, and 5. The instrument probe was placed approximately 2 inches from the sampling port. Each sampling interval was approximately 30 seconds. Multiple runs were made at each sampling port during a 10-minute interval. The MM1 instrument recorded and printed a complete mass spectrum from each sampling event. The spectra were examined and analyte identifications were confirmed.

8.1.2.2.4.1.3 Specific VOC's by modified VOST. Specific VOC concentrations were measured at the afterburner inlet for Test Runs 1 through 18 and at each leg of the off-gas manifold for Test Runs 19 through 23 using a modified VOST.[5] Modification was required since the VOC concentrations at these locations were too high to be accommodated by a standard VOST (i.e., greater than 500 ppm by volume). The major modification included an increased mass of activated charcoal to fully absorb the VOC's. A detailed description of the modified VOST is included in Appendix C.

8.1.2.2.4.2 VOC's in stack discharge. Specific VOC concentrations were measured at the discharge stack during Test Runs 8, 9, and 10 using a standard VOST.[5] This sampling train was applicable to the lower concentrations (i.e., less than 500 ppm by volume) encountered at this location.

8.1.2.2.5 Particulate and hydrochloric acid. Particulate and hydrochloric acid (HCl) in the discharge stack gases were collected simultaneously using a modified EPA Method 5 sampling train[5] during Test Runs 8, 9, and 10.

8.1.2.2.6 Fixed gases (carbon dioxide, oxygen, and carbon monoxide). Fixed gases were monitored for all test runs in the discharge stack gases using an EPA Method 3 sampling train.[5]

8.2 Analytical techniques. All soil, air, and water (condensate from the off-gases) samples were stored on ice until delivery to the WESTON Laboratory. Upon arrival at the laboratory, all chain-of-custody forms were signed and samples were recorded in a bound log book. All sample containers were maintained at 4°C until analysis. No samples were retained longer than allowable holding times (i.e., 14 days). The analytical parameters and methods are listed in Table 8-4. A copy of the analytical methods is contained in Appendix E. A brief discussion follows.

8.2.1 VOC's.

8.2.1.1 VOC's in soil. Volatile organics in soil samples were analyzed using the EPA Contract Laboratory Protocol (CLP) method for "GC/MS Analysis of Purgeable Organics in Soils and Sediments." Low level samples (i.e. those containing 5 to 2000 ppb) were by the "low level protocol" in which an inert gas was bubbled through a mixture of a 0.005 to 5 gram sample and reagent water contained in a purging chamber at elevated temperatures. The purgeables were efficiently transferred from

TABLE 8-4. ANALYTICAL PARAMETERS AND METHODOLOGIES

Parameter	Method
A. VOC's in soil.	EPA Contract Laboratory Protocol (CLP) for GC/MS Analysis of Purgeable Organics in Soils and Sediments.
B. VOC's in the Air Stream.	
1. VOST Tubes	EPA Protocol for the Analysis of Volatile Principle Organic Hazardous Constituents (POHC's) using VOST in conjunction with the National Institute for Occupational Safety and Health (NIOSH) Method No. P&CAM 127 and the EPA CLP Method for GC/MS Analysis of Purgeable Organics.
2. Condensate	EPA CLP Method for GC/MS Analysis of Purgeable Organics.
C. Moisture Content of Soil.	Standard Method 209G.

the aqueous phase to the vapor phase. The vapor was swept through a sorbent column where the purgeables were trapped. After purging was completed, the sorbent column was heated and backflushed with the inert gas to desorb the purgeables onto a gas chromatographic column. The gas chromatograph was temperature programmed to separate the purgeables which were then detected with a mass spectrometer.

Samples containing higher levels (i.e. greater than 2000 parts per billion) of purgeable organics were analyzed using the "medium level protocol." In this procedure a measured amount of soil was extracted with methanol. A portion (5 to 100 milliliters) of the methanol extract was diluted to 5 milliliters with reagent water. An inert gas was bubbled through this solution in a specifically designed purging chamber at ambient temperature. The purgeables were effectively transferred from the aqueous phase to the vapor phase. The vapor was swept through a sorbent column where the purgeables were trapped. After purging was completed, the sorbent column was heated and backflushed with the inert gas to desorb the purgeables onto a gas chromatographic column. The gas chromatograph was temperature programmed to separate the purgeables which were then detected with a mass spectrometer as described in the CLP methods for "GC/MS Analysis of Purgeable Organics in Soils and Sediments," provided in Appendix E.

8.2.1.2 VOC's in air.

8.2.1.2.1 VOST tubes. Volatile organics collected on Tenax/Tenax charcoal (VOST tubes) were analyzed by the procedure described in the VOST protocol in which VOST cartridges were thermally desorbed onto an analytical Tenax Trap, which was subsequently desorbed onto a GC/MS system and analyzed by procedures given in the EPA CLP method for "GC/MS Analysis of Purgeable Organics." Charcoal tube samples were desorbed with carbon disulfide (NIOSH Method No. P&CAM 127). The carbon disulfide extracts were analyzed by direct injection using GC/MS procedures given in the CLP method for "GC/MS Analysis of Purgeable Organics."

8.2.1.2.2 Condensate. Volatile organics in water samples were analyzed using the EPA CLP method for "GC/MS Analysis of Purgeable Organics." In this method an inert gas was bubbled through a 5-milliliter sample contained in a specifically designed purging chamber at ambient temperature. The purgeables

were efficiently transferred from the aqueous phase to the vapor phase. The vapor was swept through a sorbent column where the purgeables were trapped. After purging was completed, the sorbent column was heated and backflushed with the inert gas to desorb the purgeables onto a gas chromatographic column. The gas chromatograph was temperature programmed to separate the purgeables which were then detected with a mass spectrometer. An aliquot of the sample was diluted with reagent water when dilution was necessary. A 5-milliliter aliquot of the dilution was taken for purging.

9. PRESENTATION OF DATA

Detailed field and analytical data associated with the Phase I and Phase II test runs are included in Appendix F. Pertinent data is also summarized, in a mass/energy balance format, in Appendix G. For convenience, Table 9-1 summarizes the range of each test variable as well as the average value. A brief discussion of the independent, controlled, and response variables is contained in the following subsections.

9.1 Independent variables.

9.1.1. Actual feed soil composition/conditions.

9.1.1.1. VOC concentrations. The excavated and feed soils were sampled to estimate the amount of VOC's that were lost to fugitive emissions. Table 9-2 summarizes the VOC concentrations that were determined to be present in the excavated and feed soils. These VOC concentrations were determined by using laboratory GC/MS analytical techniques.

With the exception of the feed soils corresponding to Test Runs 24 through 28, the VOC concentrations listed on Table 9-2 were not used in any other portion of the evaluation (i.e., VOC removal efficiencies, mass/energy balances, or statistical interpretation). Rather, the VOC concentrations in the feed soil were "backed out" using the VOC concentrations in both the processed soils and air discharge stream, as well as the following equation:

IN = OUT

VOC's in Feed Soil = VOC's in Processed Soil + VOC's in Discharge Air

The decision to use the "backed out" feed concentration was based on the following logic:

1. Although every effort was made to sample the process streams in a fashion that would enable derivation of a mass balance, this is not a realistic expectation, especially when dealing with a nonhomogeneous soil medium. In order to develop a mass balance, one of the streams must be allowed to "float," its value being derived from the remaining streams. The system was reviewed to determine which stream should be designated for derivation.

TABLE 9-1. SUMMARY OF VALUES OF TEST VARIABLES FOR PHASE I AND PHASE II OF THE PILOT STUDY

	Phase I		Phase II	
	Range	Average	Range	Average
A. INDEPENDENT VARIABLES				
1. Feed Soil Composition/Conditions				
a. VOC Concentrations (ppm by weight)				
1) 1,2-trans Dichloroethylene	0 - 940	374	0 - 35	10
2) Trichloroethylene	0.05 - 3,476	1,638	0.01 - 2,300	410
3) Tetrachloroethylene	0.08 - 2,907	698	0 - 890	196
4) Xylene	0.03 - 27,197	1,594	11 - 58	35
5) Other VOC's	0 - 145	30	0 - 33	14
6) Total VOC's	7 - 31,923	4,333	24 - 3,324	664
b. Moisture Content (percent by weight)	13.80 - 26.40	19.30	15.0 - 20.60	17.30
c. Temperature (°C)	20.20 - 30.97	25.46	14.2 - 31.1	22.6
2. Air Inlet Composition/Conditions				
a. VOC Concentrations				
1) Total VOC's (ppm by volume)	<1.0 <1.0	<1.0	<1.0 <1.0	<1.0
b. Moisture Content (percent by weight)	1.5 - 3.0	2.1	0.8 - 2.4	1.6
c. Ambient Temperature (°C)	23.0 - 33.0	27.2	17.0 - 33.0	25.0
B. CONTROL VARIABLES				
1. Held Constant At All Levels				
a. Air Flow Rate (lbs/hour)				
1) Process Air	102 - 234	173	138 - 197	168
2) Infiltration Air	145 - 270	203	176 - 286	235
2. Held Constant At Various Levels				
a. Soil Discharge Temperature (°C)				
1) Level 1	49.7 - 66.3	56.4	59.8 - 62.8	60.9
2) Level 2	95.4 - 120.9	103.5	141.0 - 150.0	145.5
3) Level 3	137.3 - 175.3	155.0	174.6 - 232.7	206.8

6059A

TABLE 9-1. (CONTINUED)

	Phase I Range	Phase I Average	Phase II Range	Phase II Average
A b. Soil Residence Time (minutes)				
1) Level 1	28.9 - 30.2	29.6	58.0 - 60.2	58.8
2) Level 2	43.7 - 46.4	44.8	N/A	75.7
3) Level 3	58.3 - 61.2	59.4	85.6 - 88.5	86.7
c. Air Temperature at Inlet (°C)				
1) Level 1 (target - ambient)	23 - 29	26	17 - 21	20
2) Level 2 (target - 90°C)	61 - 99	86	96 - 98	97
C. RESPONSE VARIABLES MEASURED				
1. Processed Soil Composition/Conditions				
a. VOC Concentrations (ppm by weight)				
1) 1,2-trans Dichloroethylene	0 - 160	10	0 - 13	2
2) Trichloroethyle	0 - 880	59	0.01 - 52	8
3) Tetrachloroethylene	0 - 400	45	0 - 48	6
4) Xylene	0 - 64	6	0 - 6	1
5) Other VOC's	0 - 13	1	0.10 - 3	1
6) Total VOC's	0.01 - 1,517	122	0.30 - 112	17
b. Moisture Content (percent by weight)*	0.1 - 13.8	4.4	0.1 - 4.5	1.8
c. Mass Flow Rate (lbs/hr - wet feed basis)	142 - 383	216	109 - 232	164
2. Air Discharge Composition/Conditions				
a. VOC Concentrations (ppm/vol)				
1) 1,2-trans Dichloroethylene	0 - 208	66	0 - 0.5	0.20
2) Trichloroethylene	0 - 785	215	0 - 0.2	0.06
3) Tetrachloroethylene	0 - 237	58	0 - 0	0
4) Xylene	0 - 3,184	192	1.4 - 5.0	2.80
5) Other VOC's	0 - 33	6	1.2 - 3.0	2.30
6) Total VOC's	1.1 - 3,624	537	3.7 - 8.0	5.30
b. Moisture Content (percent by weight)	4.8 - 22.7	12.6	5.4 - 14.8	9.60
c. Temperature (°C)	34 - 118	71	44 - 117	81

N/A: Not applicable - only 1 test run evaluated 75 minute residence time.
* Does not include moisture content of treated soil reprocessed during test runs 27 and 28 (i.e., 1.0 and 0.1 percent, respectively).

TABLE 9-2. COMPARISON OF VOC CONCENTRATIONS IN EXCAVATED SOILS AND FEED SOILS (PPM BY WEIGHT)

Run test	Dichloroethylene		Trichloroethylene		Tetrachloroethylene		Xylene		Other VOC's		Total VOC's	
	Excavated	Feed	Excavated	Feed	Excavated	Feed	Excavated	Feed	Excavated	Feed	Excavated	Feed
I. Phase I Test Runs												
1	0.48	0.55	0.64	0.21*	0.13*	0.03*	0.12*	BDL	0.03*	0.76	1.40	1.55
2	110.00	63.00	3,600.00	1,600.00	4,800.00	1,500.00	35.00*	18.00	10.40*	6.20*	8,555.40	3,187.20
3	3.10	0.08*	1.50	1.40	4.70	3.90	0.26	0.07*	0.06*	0.02*	9.62	5.46
4	0.21	0.03*	0.29	0.04*	0.81	0.18	BDL	BDL	0.04*	BDL	1.35	0.25
5	830.00	330.00	20,000.00	19,000.00	580.00	950.00	460.00	320.00	117.00*	70.00*	21,987.00	20,670.00
6	770.00	210.00	8,400.00	11,000.00	39.00*	70.00*	240.00	380.00	56.00*	88.00*	9,505.00	11,748.00
7	1.20	0.30*	1.50	0.63*	0.84*	0.41*	BDL	BDL	0.62*	BDL	4.16	1.34
8	110.00	220.00	1,200.00	5,900.00	190.00	930.00	97.00*	240.00	12.05*	50.00*	1,609.05	7,340.00
9	1,200.00	470.00	2,640.00	930.00	BDL	98.00*	47.00*	20.00*	269.60	BDL	4,156.60	1,518.00
10	270.00	140.00	2,200.00	1,300.00	1,300.00	1,500.00	110.00	120.00	26.60*	22.00*	3,906.60	3,082.00
11	100.00	73.00	830.00	760.00	530.00	410.00	60.00	49.00*	17.30*	7.10*	1,537.30	1,299.10
12	NO EXCAVATION											
13	62.00	47.00	39.00*	55.00	30.00*	61.00	29.00*	23.00	BDL	5.42*	160.00	191.42
14	130.00	80.00	1,600.00	28.00*	230.00	61.00	150.00	59.00	28.30*	10.00*	2,138.30	238.00
15	310.00	320.00	2,200.00	1,800.00	2,300.00	2,500.00	140.00	180.00	35.00*	13.20*	4,985.00	4,813.20
16	140.00	210.00	950.00	150.00	1,900.00	1,500.00	13.00*	73.00	40.80	50.00*	3,043.80	1,983.00
17	NO EXCAVATION											
18	BDL	2.40*	BDL	1.00*	8.00*	3.30*	BDL	BDL	BDL	BDL	8.00	6.70
Average	252.30	135.40	2,728.90	2,657.90	744.60	599.20	86.30	92.60	38.40	20.20	3,850.60	3,503.30

*Estimated value
BDL = Below Detection Limit

TABLE 9-2. (CONTINUED)

Test run number	Dichloroethylene		Trichloroethylene		Tetrachloroethylene		Xylene		Other VOC's		Total VOC's	
	Excavated	Feed	Excavated	Feed	Excavated	Feed	Excavated	Feed	Excavated	Feed	Excavated	Feed
11. Phase II Test Runs												
19	1.80*	0.75*	BDL	BDL	BDL	BDL	6.30	3.30	1.50*	0.53*	9.60	4.58
20	NO EXCAVATION											
21	0.02*	0.02*	0.08*	0.07*	0.03*	0.03*	0.10	0.16	BDL	0.02*	0.22	0.30
22	0.45*	BDL	BDL	BDL	BDL	BDL	79.00	34.00	34.76	5.60	114.21	39.60
23	NO EXCAVATION											
24	74.00	22.00	>390.00	180.00	>260.00	140.00	>7,190.00	18.00	16.80	5.52	>930.80	365.52
25	NO EXCAVATION											
26	NO EXCAVATION											
27	13.00*	BDL	340.00	83.00	210.00	120.00	35.00*	23.00	BDL	BDL	598.00	226.00
28	NO EXCAVATION											
Total	89.27	22.77	>730.08	263.07	>470.03	260.03	>310.40	78.46	53.06	11.67	>1,652.83	636.00

*Estimated Value
BDL - Below Detection Limit

2. Upon consideration of the three process streams i.e., feed soil, processed soil, and discharge air, the highest level of confidence was placed in the samples recovered from the discharge air stream. First, the air stream was far more homogeneous than the soil streams. Second, the air stream was monitored continuously over the entire duration of the test. The air sample was passed through a highly efficient VOST train that effectively removed the VOC's. Therefore, the air stream composite sample was assumed to be the most representative. The next decision was which of the two remaining streams was the more representative.
3. Due to the extremely nonhomogeneous nature of the soil, it is highly unlikely that the one gram sample (approximately) of feed soil that was analyzed using GC/MS techniques was representative of the soils that were actually fed to the unit over the entire duration of the test. Admittedly, this is also true of the processed soils; however, the level of confidence associated with the processed soil sample is higher than that of the feed soil. The feed soil was generally full of clumps, moist, and irregular in consistency. In addition, the concentrations of VOC's in the feed soil were normally very high; therefore, the potential for masking of the lower concentration compounds by the higher concentration compounds existed, since the detection limits were high. The processed soil, on the other hand, was thoroughly mixed inside the processor. The flights of the screws meshed with each other to effectively break down the lumps that were inherent in the feed soil. In addition, the processed soils were dry, more regular in consistency, and the concentrations of VOC's were much lower than those of the feed soil. With these considerations, the composite processed soil sample was assumed to be the more representative. The feed soil concentrations were backed out using the processed soil and air discharge streams.

During Test Runs 24 through 28, the air discharge stream was not monitored. Therefore, for these test runs the only alternative was to assume that the laboratory GC/MS analyses for VOC's in the feed soil was representative. For comparison purposes, Table 9-3 summarizes the values corresponding to the feed soil laboratory determined via GC/MS analytical results and the values corresponding to the "backed out" feed soil concentrations.

TABLE 9-4. COMPARISON OF LABORATORY GC/MS ANALYTICAL RESULTS AND DERIVED CONCENTRATIONS IN THE FEED SOIL (PPM BY WEIGHT)

Run test	Dichloroethylene		Trichloroethylene		Tetrachloroethylene		Xylene		Other VOC's		Total VOC's	
	Laboratory	Derived	Laboratory	Derived	Laboratory	Derived	Laboratory	Derived	Laboratory	Derived	Laboratory	Derived
1. Phase I Test Runs												
1	0.55	BDL	0.21*	BDL	0.03*	BDL	BDL	BDL	0.76	BDL	1.55	BDL
2	63.00	560.70	1,600.00	3,306.35	1,500.00	2,907.05	18.00	23.48	6.20*	10.09	3,187.20	6,807.68
3	0.08*	BDL	1.40	24.24	3.90	54.55	0.07*	36.34	0.02*	BDL	5.46	115.14
4	0.03*	BDL	0.041*	0.05	0.18	6.47	BDL	0.029	BDL	0.06	0.25	6.60
5	330.00	939.86	19,000.00	3,475.60	950.00	596.45	320.00	298.22	70.00*	144.59	20,670.00	5,454.72
6	210.00	529.40	11,000.00	2,907.30	70.00*	50.50	380.00	291.58	88.00*	89.69	11,748.00	3,868.47
7	0.30*	0.17	0.63*	30.40	0.41*	0.08	BDL	7.54	BDL	BDL	1.34	38.19
8	220.00	290.84	5,900.00	1,955.26	930.00	699.13	240.00	85.97	50.00*	12.50	7,340.00	3,043.70
9	470.00	889.06	930.00	1,997.44	98.00*	346.21	20.00*	106.90	BDL	38.92	1,518.00	3,378.54
10	140.00	586.11	1,300.00	2,678.54	1,500.00	1,422.03	120.00	27,197.37	22.00*	39.13	3,082.00	31,923.17
11	73.00	264.04	760.00	2,382.81	410.00	727.84	49.00*	65.88	7.10*	20.05	1,299.10	3,460.63
12	47.00	472.19	220.00	2,390.63	230.00	1,257.61	50.00	167.49	11.00*	65.11	558.00	4,353.02
13	47.00	246.56	55.00	347.31	61.00	117.51	23.00	33.60	5.42*	12.24	191.42	757.22
14	80.00	410.53	28.00*	1,945.78	61.00	125.70	59.00	98.41	10.00*	22.70	238.00	2,603.12
15	320.00	844.63	1,800.00	2,652.70	2,500.00	1,369.21	180.00	187.20	13.20*	45.18	4,813.20	5,098.91
16	210.00	478.91	150.00	2,126.21	1,500.00	1,354.17	73.00	77.84	50.00*	20.64	1,983.00	4,057.77
17	7.70*	204.94	BDL	1,264.98	210.00	1,512.32	BDL	14.14	4.10*	BDL	221.80	2,996.39
18	2.40*	9.71	1.00*	3.29	3.30*	9.41	BDL	4.93	BDL	9.60	6.70	36.94
Average	123.40	373.80	2,374.80	1,638.30	557.10	697.58	85.12	1,594.27	18.77	29.47	3,159.17	4,333.35

*Estimated value
BDL = Below Detection Limit.

TABLE 9-3. (CONTINUED)

Run test	Dichloroethylene Laboratory	Dichloroethylene Derived	Trichloroethylene Laboratory	Trichloroethylene Derived	Tetrachloroethylene Laboratory	Tetrachloroethylene Derived	Xylene Laboratory	Xylene Derived	Other VOC's Laboratory	Other VOC's Derived	Total VOC's Laboratory	Total VOC's Derived
II. Phase II Test Runs												
19	0.75*	2.80	BDL	2.56	BDL	0.13	3.30	10.87	0.53*	7.19	4.58	23.54
20	0.74*	2.59	BDL	1.30	0.40*	BDL	13.00	12.98	2.36*	17.94	16.50	34.81
21	0.02*	BDL	0.07*	0.01	0.03*	BDL	0.16	11.81	0.02*	19.68	0.30	31.50
22	BDL	BDL	BDL	0.17	BDL	0.02	34.00	40.42	5.60	21.72	39.60	62.33
23	BDL	0.01	BDL	0.14	BDL	0.01	1.50	58.00	0.38	33.29	1.88	91.45
24	NO AIR MONITORING											
25	NO AIR MONITORING											
26	NO AIR MONITORING											
27	NO AIR MONITORING											
28	NO AIR MONITORING											

* = Estimated value
BDL = Below Detection Limit

9.1.1.2 Moisture content. As expected, the moisture content of the feed soil varied with local weather conditions. The average moisture content of the feed soils was 18.7 percent by weight, with a range of 13.8 to 26.4 percent by weight. During Test Runs 27 and 28, previously treated soils from Test Run 2 were processed. The moisture contents of these soils were 10.7 percent by weight and 11.3 percent by weight for feed soils used in Test Runs 27 and 28, respectively.

9.1.1.3 Temperature. The temperature of the feed soils varied from 14.2°C to 31.1°C. The average feed soil temperature was 24.9°C.

9.1.2 Actual air inlet composition/conditions.

9.1.2.1 VOC concentrations. Field instruments were used to monitor the total VOC concentration in the inlet air stream (the detection limit of the field instrument was 1 ppm by volume). At no time during the pilot study were VOC's detected in the inlet air stream.

9.1.2.2 Moisture content. The moisture content of the inlet air stream varied with ambient conditions, time of day, etc. As shown in Table 9-1, the average moisture content of the ambient air was 1.9 percent by weight and ranged from 0.8 percent to 3.0 percent by weight.

9.1.2.3 Ambient temperature. The ambient temperature of the inlet air stream was regularly monitored and recorded. The range of ambient temperatures was from 17°C to 33°C, with an average value of 26.3°C.

9.2 Control test variables. The schedule of test runs as well as a summary of the control test variables are shown in Table 5-1. A brief discussion is included in the following subsections.

9.2.1 Control variables held constant at all levels.

9.2.1.1 Air flow rate. The air flow rate was maintained by setting the position of the damper located on the suction side of the induced draft fan. Although attempts were made to seal the unit, infiltration air was inadvertently drawn through the system. To determine the amount of air infiltrating the system, the flow rate was measured at two separate locations: 1) at the discharge of the air preheater, and 2) at the suction of the induced draft fan. The corresponding flow of infiltration air was determined using the following equation:

Infiltration Air = Air Discharging the Thermal Processor - Air Discharging the Preheater

As shown in Table 9-1, the process air flow rate ranged from 102 lbs/hr to 234 lbs/hr, with an average flow rate of 171 lbs/hr. The infiltration air flow rate ranged from 145 lbs/hr to 286 lbs/hr. The average infiltration air flow rate was 215 lbs/hr.

9.2.2 Control variables held constant at various levels.

9.2.2.1 Soil discharge temperature. As mentioned, various levels of soil discharge temperature were maintained during appropriate test runs to evaluate the effect of varying operating temperature on VOC removal efficiency. The operating temperature was maintained by controlling the temperature, pressure, and flow of the heating fluid (i.e., Therminol 66). As the moisture content of the feed soils varied, however, the heat input required to achieve the desired soil discharge temperature also varied, especially when the operating temperature was in close proximity to the boiling point of water. Therefore, the actual soil discharge temperatures varied slightly from the target temperature. The range of actual soil discharge temperatures as well as the average temperatures are shown for Phase I and Phase II test runs in Table 9-1.

9.2.2.2 Soil residence time. The soil residence time was maintained by adjusting the rotational speed of the screws. The range of actual residence times and the average residence times are shown in Table 9-1.

9.2.2.3 Air inlet temperature. Two air inlet temperatures were evaluated during the pilot study: ambient air and heated air. The average ambient air temperature was 24°C, but ranged from 17°C to 29°C, varying with local weather conditions, time of day, etc. For the test runs that operated with an elevated air inlet temperature, the electrical resistance heater was set to the maximum control setting and the corresponding air temperatures were monitored. The temperature of the heated air stream ranged from 61°C to 99°C, with an average value of 90°C.

9.3 Response variables measured. The average values for the response variables that were measured as well as the range of values are shown in Table 9-1. A brief discussion and more detailed tables are contained in Appendix H and the following subsections.

9.3.1 Processed soil composition/conditions. The response variables measured in the soil discharge stream were the VOC concentrations, moisture content, and mass flow rate. As expected, these response variables were totally dependent on the operating conditions of the specific test runs, i.e., residence time, soil discharge temperature, and air inlet temperature.

9.3.1.1 VOC concentrations. A summary table of the VOC concentrations determined to have been present in the processed soils is included in Table 9-4. These values represent the results of the laboratory GC/MS analyses. The VOC concentrations are presented in a matrix format.

Although the VOC concentrations in the processed soils are very significant, it is not possible to evaluate the effects of soil residence time, soil discharge temperature, and air inlet temperature by simply comparing the residual VOC concentrations. In most cases, the concentration of contaminant in the feed soil had a strong effect on the corresponding concentration in the processed soil. In addition, there were cases where a specific contaminant was not determined to have been present at detectable levels in the feed soil. Therefore, a concentration that is below the detection limit in the processed soil may not reflect complete removal but absence of contaminant in the feed soil. A more effective means of evaluating the operating conditions is to analyze the VOC removal efficiency, i.e.:

VOC Removal Efficiency =

$$\frac{\text{VOC's in Feed Soil} - \text{VOC's in Processed Soil}}{\text{VOC's in Feed Soil}} \times 100 \text{ percent}$$

In this equation, the VOC's in feed soil refer to the "backed out" concentrations discussed in Subsection 9.1.1.1.1. A summary of the VOC removal efficiencies associated with each set of operating conditions is shown in Table 9-5.

I. Ambient Air Inlet Temperature

Residence Time (Minutes)	Contaminant	Soil Discharge Temperature (°C) 50	100	150	Maximum
30	DCE	160.00	BDL	1.10	—
	TCE	880.00	BDL	7.00	—
	PCE	400.00	BDL	29.00	—
	Xylene	64.00	4.10	6.40	—
	Other	12.90	BDL	1.31	—
	Major 4	1504.00	4.10	43.50	—
	Total	1516.90	4.10	44.81	—
45	DCE	BDL	1.90	0.77	—
	TCE	0.01	57.00	0.21	—
	PCE	0.05	1.00	BDL	—
	Xylene	BDL	7.90	0.04	—
	Other	BDL	1.00	1.01	—
	Major 4	0.06	67.80	1.02	—
	Total	0.06	68.80	2.03	—
60	DCE	BDL	BDL	0.51	—
	TCE	BDL	BDL	0.58	—
	PCE	BDL	BDL	0.05	—
	Xylene	BDL	0.01	0.05	—
	Other	BDL	BDL	1.17	—
	Major 4	BDL	0.01	1.19	—
	Total	BDL	0.01	2.37	—
	DCE	0.89	—	—	0.39
	TCE	5.00	—	—	1.90
	PCE	1.30	—	—	0.27
	Xylene	0.13	—	—	0.03
	Other	0.10	—	—	0.17
	Major 4	7.32	—	—	2.59
	Total	7.42	—	—	2.76
	DCE	13.00	—	—	—
	TCE	21.00	—	—	—
	PCE	8.60	—	—	—
	Xylene	0.89	—	—	—
	Other	0.45	—	—	—
	Major 4	43.49	—	—	—
	Total	43.94	—	—	—
	DCE	3.30	—	—	—
	TCE	52.00	—	—	—
	PCE	48.00	—	—	—
	Xylene	5.80	—	—	—
	Other	2.89	—	—	—
	Major 4	109.10	—	—	—
	Total	111.99	—	—	—
75	DCE	—	—	—	—
	TCE	—	—	—	—
	PCE	—	—	—	—
	Xylene	—	—	—	—
	Other	—	—	—	—
	Major 4	—	—	—	—
	Total	—	—	—	—
90	DCE	—	—	—	0.09
	TCE	—	—	—	0.13
	PCE	—	—	—	BDL
	Xylene	—	—	—	BDL
	Other	—	—	—	0.70
	Major 4	—	—	—	0.22
	Total	—	—	—	0.92

DCE = Dichloroethylene
TCE = Trichloroethylene
PCE = Tetrachloroethylene
= Phase I Test Runs

BDL = Below Detection Limit
— = Not Evaluated
N/A = No VOC's were determined to be present in the feed or processed soils.

TABLE 9-4 CONCENTRATION OF VOC'S IN THE PROCESSED SOILS (PPM BY WEIGHT)

II. Elevated Air Inlet Temperature

Residence Time (Minutes)	Contaminant	Soil Discharge Temperature (°C) 50	100	150	Maximum
30	DCE	0.17	15.00	2.00	—
	TCE	0.23	61.00	12.00	—
	PCE	0.09	33.00	27.00	—
	Xylene	BDL	20.00	7.50	—
	Other	BDL	3.62	1.50	—
	Major 4	0.49	129.00	48.50	—
	Total	0.49	132.62	50.00	—
45	DCE	0.42	BDL	1.30	—
	TCE	0.02	0.06	2.10	—
	PCE	0.08	0.04	1.30	—
	Xylene	0.30	0.04	0.19	—
	Other	0.30	0.07	0.78	—
	Major 4	0.82	0.13	4.89	—
	Total	1.12	0.20	5.67	—
60	DCE	0.67	BDL	0.73	—
	TCE	40.00	6.90	1.80	—
	PCE	320.00	BDL	1.40	—
	Xylene	3.60	BDL	0.55	—
	Other	BDL	BDL	BDL	—
	Major 4	364.27	6.90	4.48	—
	Total	364.27	6.90	4.48	—
	DCE	—	—	BDL	0.24
	TCE	—	—	0.20	0.98
	PCE	—	—	0.03	0.15
	Xylene	—	—	0.05	0.08
	Other	—	—	0.74	1.35
	Major 4	—	—	0.28	1.45
	Total	—	—	1.01	2.80
75	DCE	—	—	—	BDL
	TCE	—	—	—	0.01
	PCE	—	—	—	BDL
	Xylene	—	—	—	0.04
	Other	—	—	—	0.28
	Major 4	—	—	—	0.05
	Total	—	—	—	0.33
90	DCE	—	—	0.01	BDL
	TCE	—	—	0.16	0.01
	PCE	—	—	0.02	BDL
	Xylene	—	—	0.14	0.02
	Other	—	—	1.43	0.53
	Major 4	—	—	0.33	0.03
	Total	—	—	1.76	0.56

DCE = Dichloroethylene
TCE = Trichloroethylene
PCE = Tetrachloroethylene
= Phase I Test Runs

BDL = Below Detection Limit
— = Not Evaluated
N/A = No VOC's were determined to be present in the feed or processed soils.

TABLE 9-4 (CONTINUED)

I. Ambient Air Inlet Temperature

Residence Time (Minutes)	Contaminant	Soil Discharge Temperature (°C) 50	100	150	Maximum
30	DCE	46.71	100.00	99.59	—
	TCE	56.41	100.00	99.78	—
	PCE	44.58	100.00	98.27	—
	Xylene	27.89	95.47	97.21	—
	Other	0	100.00	97.64	—
	Major 4	51.94	99.91	99.30	—
	Total	51.73	99.91	99.28	—
45	DCE	N/A	99.69	99.84	—
	TCE	99.96	98.31	99.99	—
	PCE	99.93	98.30	100.00	—
	Xylene	100.00	97.67	99.97	—
	Other	N/A	99.04	96.29	—
	Major 4	99.96	98.46	99.97	—
	Total	99.96	98.47	99.93	—
60	DCE	N/A	100.00	99.81	
	TCE	N/A	100.00	99.85	—
	PCE	N/A	100.00	99.96	—
	Xylene	N/A	99.94	99.87	—
	Other	N/A	N/A	91 40	—
	Major 4	N/A	100.00	99.86	—
	Total	N/A	100.00	99.72	—
	DCE	96.45	—	—	N/A
	TCE	97.57	—	—	97 97
	PCE	99.19	—	—	99.80
	Xylene	99.37	—	—	99.90
	Other	98.49	—	—	N/A
	Major 4	98.22	—	—	98.98
	Total	98.22	—	—	98.92
	DCE	65.79	—	—	
	TCE	98.24	—	—	—
	PCE	98.31	—	—	—
	Xylene	97 78	—	—	—
	Other	95.17	—	—	—
	Major 4	97 56	—	—	—
	Total	97.55	—	—	—
	DCE	90.26	—	—	—
	TCE	98.00	—	—	—
	PCE	95.22	—	—	—
	Xylene	97.78	—	—	—
	Other	84.94	—	—	—
	Major 4	97.08	—	—	—
	Total	97.02	—	—	—
75	DCE	—	—	—	—
	TCE	—	—	—	—
	PCE	—	—	—	—
	Xylene	—	—	—	—
	Other	—	—	—	—
	Major 4	—	—	—	—
	Total	—	—	—	—
90	DCE	—	—	—	98.87
	TCE	—	—	—	99.97
	PCE	—	—	—	100.00
	Xylene	—	—	—	100 00
	Other	—	—	—	90.52
	Major 4	—	—	—	99.98
	Total	—	—	—	99.91

DCE = Dichloroethylene
TCE = Trichloroethylene
PCE = Tetrachloroethylene
= Phase I Test Runs

BDL = Below Detection Limit
— = Not Evaluated
N/A = No VOC's were determined to be present in the feed or processed soils

TABLE 9-5 REMOVAL EFFICIENCY OF VOC'S (PERCENT)

II. Elevated Air Inlet Temperature

Residence Time (Minutes)	Contaminant	Soil Discharge Temperature (°C) 50	100	150	Maximum
30	DCE	0	98.52	99.66	—
	TCE	99.27	97.32	99.60	—
	PCE	0	91.65	98.30	—
	Xylene	100.00	83.61	96.45	—
	Other	N/A	91.85	98.17	—
	Major 4	98.77	96.62	99.10	—
	Total	98.77	96.56	99.09	—
45	DCE	96.20	N/A	99.54	—
	TCE	99.41	0	99.92	—
	PCE	99.26	99.53	99.83	—
	Xylene	94.65	0	99.73	—
	Other	97.29	0	96.37	—
	Major 4	97.36	98.31	99.87	—
	Total	97.34	97.47	99.85	—
60	DCE	99.89	100.00	99.90	—
	TCE	98.89	99.85	99.95	—
	PCE	89.91	100.00	99.92	—
	Xylene	85.95	100.00	100.00	—
	Other	100.00	100.00	100.00	—
	Major 4	95.09	99.90	99.99	—
	Total	95.10	99.90	99.99	—
	DCE	—	—	0	92.71
	TCE	—	—	0	67.48
	PCE	—	—	0	0
	Xylene	—	—	99.89	99.34
	Other	—	—	97.11	84.11
	Major 4	—	—	99.42	92.45
	Total	—	—	98.61	89.90
75	DCE	—	—	—	0
	TCE	—	—	—	0
	PCE	—	—	—	0
	Xylene	—	—	—	99.76
	Other	—	—	—	98.88
	Major 4	—	—	—	99.68
	Total	—	—	—	99.18
90	DCE	—	—	0	100.00
	TCE	—	—	0	99.54
	PCE	—	—	0	0
	Xylene	—	—	99.79	99.84
	Other	—	—	96.29	97.50
	Major 4	—	—	99.52	99.84
	Total	—	—	98.34	98.63

DCE = Dichloroethylene
TCE = Trichloroethylene
PCE = Tetrachloroethylene
= Phase I Test Runs

BDL = Below Detection Limit
— = Not Evaluated
N/A = No VOC's were determined to be present in the feed or processed soils.

TABLE 9-5 (CONTINUED)

9.3.1.2 Moisture content. The moisture content in the processed soil varied with changes in the operating conditions. The moisture content of the processed soils is shown, in matrix format, for all operating conditions in Table H-1 in Appendix H.

9.3.1.3 Mass flow rate. The mass flow rates of the feed and processed soils were monitored regularly during the pilot study. As expected, the mass flow rate of the processed soils varied with changes in the operating conditions and moisture content in the soil. The mass flow rates of the feed and processed soil streams are summarized in Table H-2 in Appendix H.

9.3.2 Actual air discharge composition/conditions. The composition/condition of the discharge air stream was monitored at two locations: 1) at the suction side of the afterburner inlet during appropriate test runs; and 2) in the afterburner stack during three selected test runs (i.e., Test Runs 8, 9, and 10). The data collected for each location will be presented separately.

9.3.2.1 Afterburner inlet.

9.3.2.1.1 VOC concentrations. VOC concentrations were monitored via modified VOST trains at the afterburner inlet during the first 18 test runs. In addition, to identify and quantify the VOC's that were being removed along the length of the processor, modified VOST trains were also used to sample the air streams in manifolds 1, 2 and 3 during Test Runs 19 through 23. The VOC concentrations determined to be present in the afterburner inlet and in the three legs of the manifolds are shown in Table 9-6. Those concentrations are based on the results of the GC/MS analyses, using the VOST train.

In addition to the laboratory GC/MS analyses, two other modes of analysis were used to analyze the discharge gas in the three legs of the manifold system: 1) a CEM system, and 2) a mobile mass spectrometer. These instruments were used to obtain a real-time estimate of VOC emissions from the thermal processor. A brief discussion of these modes of analysis and a summary of the data determined using these instruments are contained in Tables H-3 through H-6 in Appendix H.

I. Ambient Air Inlet Temperature

Residence Time (Minutes)	Contaminant	Soil Discharge Temperature (°C) 50	100	150	Maximum
30	DCE	24.20	82.00	121.00	—
	TCE	145.00	270.00	281.00	—
	PCE	32.50	136.00	112.00	—
	Xylene	3.60	11.00	24.00	—
	Other	BDL	3.60	6.00	—
	Major 4	205.30	499.00	538.00	—
	Total	205.30	502.60	544.00	—
45	DCE	BDL	196.00	52.00	—
	TCE	1.70	785.00	183.00	—
	PCE	3.00	11.00	9.20	—
	Xylene	3.00	97.00	11.00	—
	Other	BDL	32.80	2.80	—
	Major 4	7.70	1089.80	255.20	—
	Total	7.70	1121.80	258.00	—
60	DCE	BDL	20.00	35.00	—
	TCE	BDL	90.00	37.00	—
	PCE	BDL	85.00	9.80	—
	Xylene	BDL	1.10	4.20	—
	Other	BDL	BDL	1.60	—
	Major 4	BDL	196.10	86.00	—
	Total	BDL	196.10	87.60	—
75	DCE	—	—	—	—
	TCE	—	—	—	—
	PCE	—	—	—	—
	Xylene	—	—	—	—
	Other	—	—	—	—
	Major 4	—	—	—	—
	Total	—	—	—	—
90	DCE	—	—	—	—
	TCE	—	—	—	—
	PCE	—	—	—	—
	Xylene	—	—	—	—
	Other	—	—	—	—
	Major 4	—	—	—	—
	Total	—	—	—	—

DCE = Dichloroethylene
TCE = Trichloroethylene
PCE = Tetrachloroethylene
= Phase I Test Runs

BDL = Below Detection Limit
— = Not Evaluated
N/A = No VOC's were determined to be present in the feed or processed soils.

TABLE 9-6 VOC CONCENTRATIONS IN THE AIR DISCHARGE STREAM AT THE AFTERBURNER INLET AS DETERMINED BY GC/MS (PPM BY VOLUME)

II. Elevated Air Inlet Temperature

Residence Time (Minutes)	Contaminant	Soil Discharge Temperature (°C) 50	100	150	Maximum
30	DCE	BDL	173.00	63.00	—
	TCE	4.40	283.00	238.00	—
	PCE	BDL	36.60	97.00	—
	Xylene	1.50	15.80	20.00	—
	Other	BDL	7.40	8.50	—
	Major 4	5.90	508.40	418.00	—
	Total	5.90	515.80	426.50	—
45	DCE	1.70	BDL	54.00	—
	TCE	0.40	BDL	362.00	—
	PCE	1.00	1.10	87.00	—
	Xylene	1.00	BDL	12.00	—
	Other	1.20	BDL	3.80	—
	Major 4	4.10	1.10	515.00	—
	Total	5.30	1.10	518.80	—
60	DCE	87.00	208.00	75.00	—
	TCE	375.00	567.00	254.00	—
	PCE	237.00	76.70	106.00	—
	Xylene	3.00	60.00	3184.00	—
	Other	2.00	24.70	4.70	—
	Major 4	702.00	911.70	3619.00	—
	Total	704.00	936.40	3623.70	—
				Man 1 / Man 2 / Man 3	Man 1 / Man 2 / Man 3
	DCE	—	—	BDL / BDL / BDL	0.50 / 0.60 / 0.50
	TCE	—	—	BDL / BDL / BDL	BDL / 0.30 / 0.30
	PCE	—	—	BDL / BDL / BDL	BDL / BDL / BDL
	Xylene	—	—	2.50 / 8.10 / 2.40	1.30 / 1.90 / 2.20
	Other	—	—	1.10 / 5.30 / 1.20	0.60 / 0.80 / 2.20
	Major 4	—	—	2.50 / 8.10 / 2.40	1.80 / 2.80 / 3.00
	Total	—	—	3.60 / 13.40 / 3.60	2.40 / 3.60 / 5.20
					Man 1 / Man 2 / Man 3
75	DCE	—	—	—	BDL / BDL / BDL
	TCE	—	—	—	BDL / BDL / BDL
	PCE	—	—	—	BDL / BDL / BDL
	Xylene	—	—	—	0.80 / 1.50 / 2.10
	Other	—	—	—	0.80 / 2.00 / 5.50
	Major 4	—	—	—	0.80 / 1.50 / 2.10
	Total	—	—	—	1.60 / 3.50 / 7.60
				Man 1 / Man 2 / Man 3	Man 1 / Man 2 / Man 3
90	DCE	—	—	BDL / BDL / BDL	0.40 / 0.50 / BDL
	TCE	—	—	BDL / BDL / BDL	BDL / 0.30 / BDL
	PCE	—	—	BDL / BDL / BDL	BDL / BDL / BDL
	Xylene	—	—	6.50 / 6.00 / 2.60	1.10 / 1.80 / 1.30
	Other	—	—	4.30 / 3.60 / 1.20	0.50 / 1.60 / 4.00
	Major 4	—	—	6.50 / 6.00 / 2.60	1.50 / 2.60 / 1.30
	Total	—	—	10.80 / 9.60 / 3.80	2.00 / 4.20 / 5.30

DCE = Dichloroethylene
TCE = Trichloroethylene
PCE = Tetrachloroethylene
= Phase I Test Runs

BDL = Below Detection Limit
— = Not Evaluated
N/A = No VOC's were determined to be present in the feed or processed soils.

TABLE 9-6 (CONTINUED)

During optimization runs 24 through 28, the air discharge stream was not monitored via modified VOST trains. The evaluation of test run conditions was based solely on samples of the feed and processed soils. However, in order to obtain a real-time estimate of VOC emissions, a CEM system was used to monitor manifold number 2 during Test Runs 25 through 28. (The portable monitor was non-functional during Test Run 24).

9.3.2.1.2 Moisture content. The moisture content of the air discharge stream was monitored at the afterburner inlet. The moisture content of the combined air stream is shown for all operating conditions in Table H-7 in Appendix H.

9.3.2.1.3 Temperature. The temperature of the gases discharging the thermal processor were monitored during each test run. Temperatures were monitored in each leg of the manifold system as well as at the afterburner inlet. Air discharge temperatures are summarized in Table H-8 in Appendix H.

9.3.2.2 Afterburner outlet. In accordance with an agreement with PADER, the gases discharging the afterburner were monitored during three selected test runs, Test Runs 8, 9, and 10. The operating conditions of the three test runs represented a low, medium, and high VOC-inlet loading condition at the afterburner. The stack gases were monitored for VOC's, particulate, hydrochloric acid, and fixed gases (i.e., carbon dioxide, oxygen, carbon monoxide). A summary of pertinent data is contained in Table 9-7. Detailed data is included in Appendix F.

TABLE 9-7. SUMMARY OF STACK TESTING RESULTS

Description	Test Run 8	Test Run 9	Test Run 10
Test Date	8/13/85	8/14/85	8/15/85
Test Duration, minutes	203	197	180
Process Conditions:			
- Target Soil Residence Time, minutes	30	30	60
- Target Processed Soil Temperature, °C	50	100	150
- Inlet Air Conditions	Ambient	Heated	Heated
VOC's in Afterburner Inlet Stream (ppm/volume)	205.3	515.8	3623.7
Stack Gas Composition:			
- CO_2, % by volume, dry basis	7.0	7.4	7.7
- O_2, % by volume, dry basis	10.6	9.4	9.0
- CO, % by volume, dry basis	0.0	0.0	0.0
- N_2, % by volume, dry basis	82.4	83.2	83.3
- Water Vapor, % by volume	13.7	24.8	17.6
Stack Gas Temperature, °C	1,016	999	977
Stack Gas Temperature, °F	1,860	1,830	1,790
Stack Gas Flow Rate, acfm, wet basis	602	598	553
Stack Gas Flow Rate, scfm, dry basis	116	102	104
Stack Gas Emission Rates			
- Particulates, lbs/hr	0.041	0.021	0.032
- Particulates, gr/dscf at 12% CO_2	0.071	0.040	0.060
- Hydrogen Chloride, ppm by volume	1,140	3,107	2,620
- Hydrogen Chloride, lbs/hr	0.75	1.80	1.55

TABLE 9-7. (continued)

Description	Test Run 8	Test Run 9	Test Run 10
VOC's in stack gas (ppm/volume)			
Dichloroethylene	<0.0002	<0.0002	<0.0002
Trichloroethylene	<0.0003	<0.0003	<0.0003
Tetrachloroethylene	<0.0002	<0.0002	<0.0002
Xylene	<0.0003	<0.0003	<0.0003

10. ANALYSIS OF RESULTS

10.1 Statistical correlations.

10.1.1 Analytical technique for developing equations. In the early stages of the project, a test plan[4] was developed that identified key process variables and established a matrix of test conditions (replicated for two different inlet air temperatures). This experimental design was selected to allow statistical evaluation of the data. Multiple linear regression[6] was employed as the statistical analysis of variance (ANOVA) technique. The analytical approach is outlined in Appendix I.

The objective of the analytical approach was to apply the multiple linear regression technique to combinations of the data base independent, control, and reponse variables to develop simple linear equations of the type:

$$Y = b_o + b_1 x_1 + \ldots + b_n x_n + E$$

where:

Y = response variable
b_o = intercept
$b_1 \ldots b_n$ = regression coefficients
$x_1 \ldots x_n$ = input or controlled variables
E = residuals

The equations would identify those input or controlled variables that had a greater significant impact on the response variable of concern; in this case, the concentration of total VOC's in the processed soils. The method of statistical interpretation was as follows:

1. Identified response, input, and control variables.
2. Identified data base.
3. Reviewed data base to identify and exclude data outliers.
4. Applied the multiple linear regression technique to the entire data base (i.e., every test run, regardless of difference in operating conditions).
5. When Step 4 was unsuccessful, separated data base into subgroups based on soil discharge temperature.

6. Applied the multiple linear regression technique to the subgrouped data.
7. Developed simple linear equations for design of a full-scale system.
8. Inserted actual data into the appropriate equations to confirm their validity.

10.1.1.1 Identification of response, input, and control variables. The objective of employing the multiple linear regression technique was to develop correlations that would support design of a full-scale system. In most cases, if not all cases, design of a full-scale system would be based upon the level of treatment required to achieve a target VOC concentration in the processed soils. The target concentration would most likely be based upon regulatory criteria, or, if nonexistent, negotiations with regulatory agencies. Therefore, the response variable of interest was identified to be the total VOC concentration in the processed soils.

The remainder of the variables were broken down into two groups: 1) those variables that are independent, site-specific, and usually known prior to design of a system (i.e. input variables); and 2) those variables that are critical design parameters and, thus, directly affect system economics (i.e. control variables). The input and control variables were identified to be:

1. Input Variables
   a. Moisture content of the feed soil (percent by weight).
   b. Total VOC concentration in the feed soil (#/hr).
2. Control Variables
   a. Heat rate (Btu/hr).
   b. Residence time (minutes).
   c. Flow rate of air (#/hr).

Note that temperature of the inlet air stream was not identified as a control variable. Upon review of the VOC removal efficiencies listed in Table 9-5, it was evident that an elevated air inlet temperature did not improve thermal stripping. In fact, in most cases the VOC removal efficiences associated with the elevated air inlet temperature were actually lower than those associated with an ambient air inlet temperature.

10.1.1.2 Identification of data base. Originally, only the data from Phase I of the pilot investigation was designated for statistical evaluation, as there were two replications for each operating condition (i.e. ambient and elevated air inlet temperatures). However, since the operating conditions of Test Runs 24, 25, and 26 of Phase II were identical to those of Test Run 1, the data from these three runs were also included in the data base.

10.1.1.3 Identification of data outliers. The data base was reviewed to identify data outliers. The following data was excluded from the data base:

1. All data pertaining to Test Run 1. No detectable levels of VOC were determined to be present in the processed soil or discharge air stream.
2. All data pertaining to Test Run 2. The trichloroethylene concentration in the VOST tube was not quantified. The trichloroethylene peak on the GC/MS spectrum was reported to be out of the calibration range but not saturated. The mass of trichloroethylene in the VOST tube was reported to be greater than 70,000 micrograms.
3. All data pertaining to Test Run 4. The VOC concentrations in the discharge air stream were below the detection limit.
4. Test Run 3 - dichloroethylene and other VOC's; Test Run 7 - Other VOC's; Test Run 17 - Other VOC's. These contaminants were not present at detectable levels in the processed soil or discharge air stream.
5. Test Run 7 - dichloroethylene and tetrachloroethylene. The concentrations of dichloroethylene and tetrachloroethylene were below the detection limits in the air stream and only slightly above the detection limit in the processed soils.

10.1.1.4 Application of multiple linear regression techniques. Originally, multiple linear regression techniques were applied to the entire data base using the previously identified response, input, and control variables. Initial attempts to develop correlations failed. Anticipating that an exponential relationship may exist, the data was transformed, and the data base was modified to include those values corresponding to the natural logarithm of total VOC's in the processed soil. However, transformation of the data base proved insufficient; attempts to develop correlations still failed.

The next approach was to separate the data base into subgroups based on the soil discharge temperature (i.e. low, medium, and high temperature test runs). When broken down into subgroups, attempts to develop correlations were successful. Simple linear equations, which were statistically significant, were developed for design of a full-scale system operating at low, medium, or high soil discharge temperatures.

Since the correlations were applicable to three distinct soil discharge temperature ranges, multiple linear regression techniques were also employed to identify the variables that were significant to the processed soil temperature. Simple equations were developed to estimate the soil discharge temperature for a system operating at high temperatures medium and high temperature ranges. No equation was developed for the low or medium temperature runs because there was too much variance in the data associated with heat input to the system under these conditions. The significant input variables identified were moisture in the feed soil and flow rate of inerts. The significant control variables were identified to be heat rate, moisture in the processed soil, and soil residence time.

10.1.2 Presentation of correlations. The correlations corresponding to the low, medium, and high soil discharge temperatures will be presented and discussed separately. The following legend is applicable to all equations:

TOT VOC's$_{PS}$	=	Total VOC concentrations in the processed soil (#/hr).
TOT VOC's$_{FS}$	=	Total VOC concentrations in the feed soil (#/hr).
H	=	Heat rate (Btu/hr).
T_R	=	Residence Time (minutes).
F_A	=	Flow Rate of Air (#/hr) - includes process and infiltration air.
M_{PS}	=	Moisture in the processed soil (percent by weight).
M_{FS}	=	Moisture in the feed soil (percent by weight).
Temp$_{PS}$	=	Temperature of the processed soil (°C).
F_I	=	Flow Rate of Inerts, i.e., non-volatiles (feed soil minus VOC's/moisture) (#/hr).

10.1.2.1 Low temperatures. Although the target soil discharge temperature was 50°C, the actual soil discharge temperature varied slightly. Therefore, the equations presented in this subsection are not restricted to a 50°C soil discharge temperature but are applicable within the range of 49.7°C to 66.3°C.

10.1.2.1.1 VOC concentration in the processed soil. The correlation for estimating the total VOC concentration in the processed soil for a system operating at low temperatures is as follows:

$$\ln [TOT\ VOC'S_{PS}] = -47.925 + (9.5717 * TOT\ VOC'S_{FS}) + (0.847 * M_{FS}) - (0.0904 * T_R) + (0.0649 * F_A)$$

It must be emphasized that this equation is <u>only</u> applicable if the response, input, and control variables are within the following ranges:

$TEMP_{PS}$:	49.7 - 66.3 (°C)
$TOT\ VOC'S_{FS}$:	0.00791 - 0.7617 (#/hr) (i.e., 40-3,890 ppm)
M_{FS}:	16.4 - 20.6 (Percent by weight)
T_R:	29.70 - 58.57 (minutes)
F_A:	356 - 464 (#/hr)
H:	11,624 - 47,765 (Btu/hr)

Even though heat rate is not determined to be significant in the correlation, its range of values (i.e. 11,624 Btu/hr to 47,765 Btu/hr) must be observed. Since actual total VOC concentrations in the processed soil resulted from a system that operated within the corresponding heat rate range, its presence in the equation is implied. The fact that the heat rate is not contained in the equation, however, suggests that there is not a strong correlation between the VOC concentration in the processed soil and the heat input to the system at low temperatures.

10.1.2.1.1.1 Analysis of the regression coefficients. Analysis of the regression coefficients in the equation gives an indication of the relative importance of each of the input or control variables. A positive regression coefficient implies that the VOC concentration in the processed soil increases as the value of the input or control variable increases. The reverse is true for variables with a negative regression coefficient.

As expected, the VOC concentration in the feed soils has a positive regression coefficient. Obviously, for fixed operating conditions, an increase in the feed concentration would result in a higher concentration in the processed soil.

The equation also indicates that an increase in the moisture content of the feed soil would result in an increase in the VOC concentration of the processed soils. The explanation for this phenomena may be twofold. First, since VOC's are soluble in water, a higher moisture content could contain a greater amount of VOC's in solution and, thus, result in a feed soil with a higher concentration. As mentioned above, under fixed operating conditions a higher feed concentration would result in a higher processed soil concentration. Second, if more moisture is present in the soils, the heat input to the system may be absorbed by the moisture and not contribute to VOC volatization.

The regression coefficient of residence time is negative, as expected, suggesting the obvious: an increase in treatment time, under fixed operating conditions, would result in a lower VOC concentration in the processed soil.

An unexpected phenomena corresponds to the air flow rate. It seems intuitive that in a thermal stripping process, an increase in the flow rate of air would result in greater stripping and enhanced volatization. The regression coefficient, however, suggests just the opposite; an increase in the air flow rate would result in an increased VOC concentration in the processed soil. This may be due to the fact that inherent in the term "thermal stripping," temperature plays a major role. Obviously, under fixed operating conditions, an increased air flow rate would absorb an increased amount of heat. This may result in a lower effective operating temperature and reduce the volatization rate.

10.1.2.1.1.2 Testing the validity of the equation. Actual data from the low temperature test runs were inserted into the equation to test its validity. A summary of actual values of the natural logarithm of the total VOC's in the processed soil is shown on Table 10-1. For comparison, listed also are the estimated values which resulted when the actual data from the appropriate test run was inserted into the equation. As shown, the estimated values exhibited an average deviation (i.e. 100% x (1 - estimated/actual)) from the actual values of 2.51 percent. The range of deviation was from 0.45 percent to 8.08 percent).

TABLE 10-1. COMPARISON OF ACTUAL AND ESTIMATED VALUES FOR THE NATURAL LOG OF THE TOTAL VOC CONCENTRATION IN THE PROCESSED SOIL - LOW TEMPERATURES

Test run	ln [TOT VOC's]$_{PS}$ (actual)	ln [TOT VOC's]$_{PS}$ (estimated)	Deviation between actual and estimated (percent)
3	-11.737	-11.630	0.92
7	-8.990	-9.780	8.08
8	-1.009	-0.985	2.44
18	-8.467	-8.505	0.45
24	-6.970	-7.069	1.40
25	-4.953	-4.710	1.05
26	-4.175	-4.314	3.22
		Average	2.51

A graphical presentation of actual versus estimated values is shown in Figure 10-1. Also displayed are isoconcentration lines representing the low, medium, and high values of actual feed concentrations (i.e. 40 ppm, 1,960 ppm, and 3,890 ppm). The equation is valid within the region bounded by the upper and lower boundary lines. These lines were developed by inserting the minimum and maximum values, where appropriate, of each of the input and control variables and solving for the natural logarithm of the total VOC's in the processed soil.

10.1.2.1.2 Temperature of the processed soils. Attempts to develop a statistically significant equation to estimate the temperature of the processed soil were not successful. There was too much variance in the data corresponding to the low temperature runs, specifically heat rate.

10.1.2.2 Middle temperatures. The target soil discharge temperature for the middle temperature runs was 100°C. The actual temperature ranged from 95.4°C to 120.9°C. Since the equation was developed using actual values, the correlation is valid within this temperature range.

10.1.2.2.1 Total VOC concentration in the processed soil. The equation for predicting the natural logarithm of total VOC's in the processed soil for a system operating at middle temperatures is:

$$\ln [\text{TOT VOC's}]_{PS} = -18.7913 - (0.0569 * T_R)$$

$$- (8.04 \times 10^{-6} * H) + (5.3553 * \text{TOT VOC's}_{FS})$$

$$+ (0.5112 * M_{FS})$$

This equation is <u>only</u> applicable if the variables are within the following ranges:

$TEMP_{PS}$:	95.4 - 120.9 (°C)
TOT $VOC's_{FS}$:	0.424 - 1.481 (#/hr) (i.e., 1,750 ppm - 6,120 ppm)
M_{FS}:	13.8 - 26.4 (Percent by weight)
T_R:	29.29 - 61.24 (minutes)
F_A:	300 - 440 (#/hr)
H:	90,234 - 457,029 (Btu/hr)

In spite of the fact that air flow rate is not contained in the correlation, the above equation is only applicable within the range noted (i.e. 300-440 #/hr). There does not appear to be a strong correlation between concentration of VOC's in the processed soil and the air flow rate within the noted range.

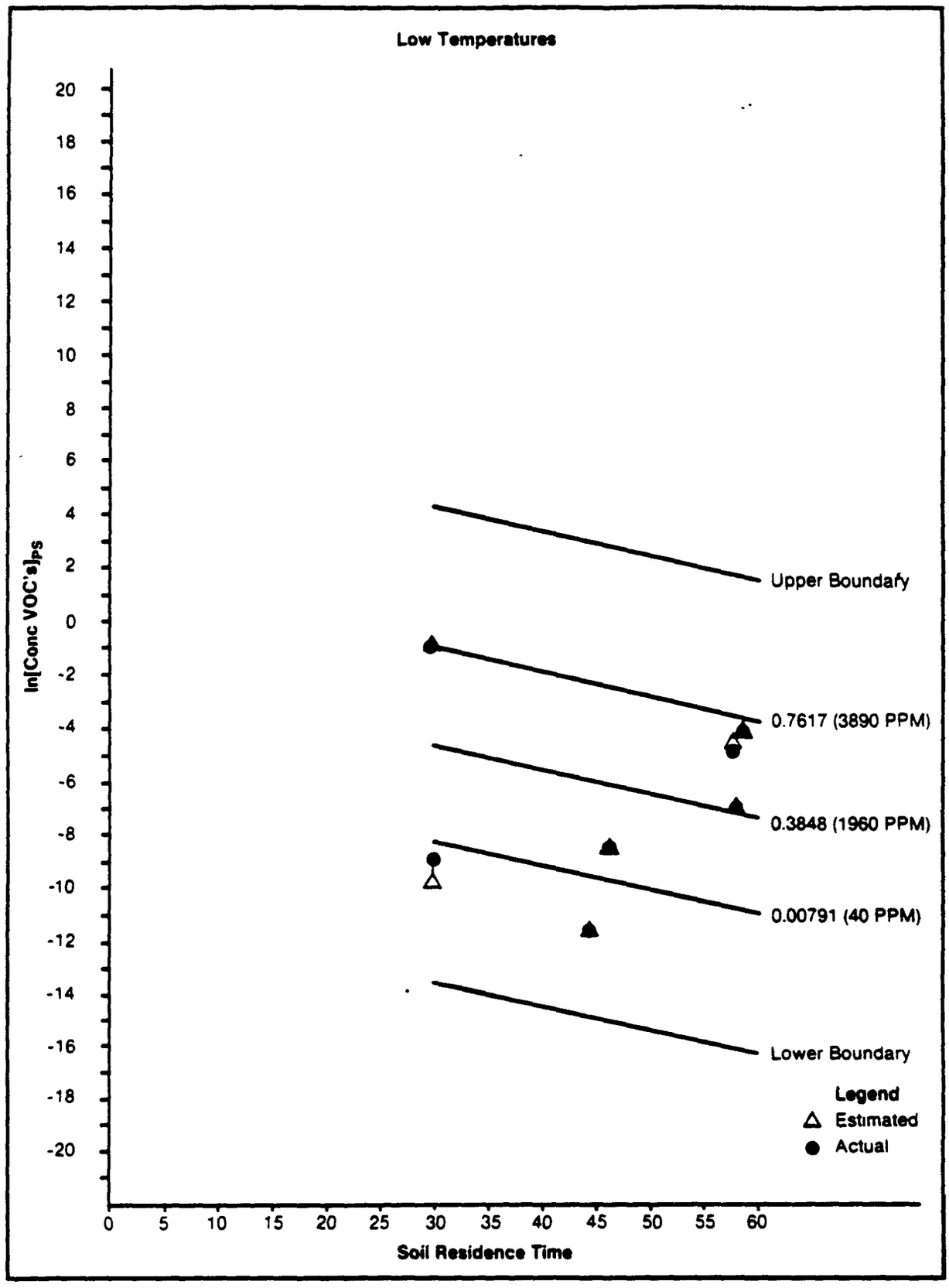

FIGURE 10-1 COMPARISON OF ACTUAL VERSUS ESTIMATED VALUES OF THE NATURAL LOGARITHM OF TOTAL VOC'S IN THE PROCESSED SOIL - LOW TEMPERATURE RUNS

10.1.2.2.1.1 Analysis of the regression coefficients. As mentioned, the regression coefficients indicate the relative contribution of each of the input and control variables. The regression coefficients of the residence time and heat rate are both negative values. This implies that as the treatment time and heat input to the system are increased, the VOC concentration in the processed soil would decrease accordingly.

The regression coefficients of the feed concentration and feed moisture content are positive values. This is consistent with the correlation developed for the low temperature runs discussed in Subsection 10.1.2.1.1.1.

10.1.2.2.1.2 Testing the validity of the equation. Actual values from the appropriate test runs were plugged into the equation to test its validity. For comparison, the actual values of the natural logarithm of total VOC's in the processed soil is shown along with the estimated values in Table 10-2. As shown, the deviation between the actual and estimated values is within the range of 0.01 percent to 0.32 percent. The average deviation between actual and estimated values is 0.09 percent. For illustration, the actual and estimated values are shown in Figure 10-2, as well as isoconcentration lines corresponding to the low, mid, and high VOC feed concentrations (i.e., 1,750 ppm, 3,940 ppm, and 6,120 ppm). The equation is only valid with the region bounded by the upper and lower limit lines. These lines were generated by inserting the minimum or maximum values of the variables, within the noted ranges, into the equation.

10.1.2.2.1.3 Temperature of the processed soils. An equation was not developed to estimate the temperature of the processed soil when operating at middle temperatures. Attempts resulted in an equation which was highly suspect. The equation indicated that the temperature of the processed soil would increase with an increase in the moisture content. However, comparison of actual test data indicated that just the opposite was true, as intuitively expected. In actuality, the temperature of the processed soil increased with <u>decreasing</u> moisture content in the processed soil. The equation was determined to be invalid.

10.1.2.3 High temperatures. The equations developed for the high temperature runs are valid for soil discharge temperatures betwen 137.3°C and 175.3°C.

TABLE 10-2. COMPARISON OF ACTUAL AND ESTIMATED VALUES FOR THE NATURAL LOG OF THE TOTAL VOC CONCENTRATION IN THE PROCESSED SOIL - MIDDLE TEMPERATURES

Test run	ln [TOT VOC's]$_{PS}$ (actual)	ln [TOT VOC's]$_{PS}$ (estimated)	Deviation between actual and estimated (percent)
5	-6.738	-6.741	0.04
6	-3.803	-3.791	0.32
9	-3.649	-3.651	0.05
16	-7.067	-7.068	0.01
17	-13.673	-13.676	0.02
		Average	0.09

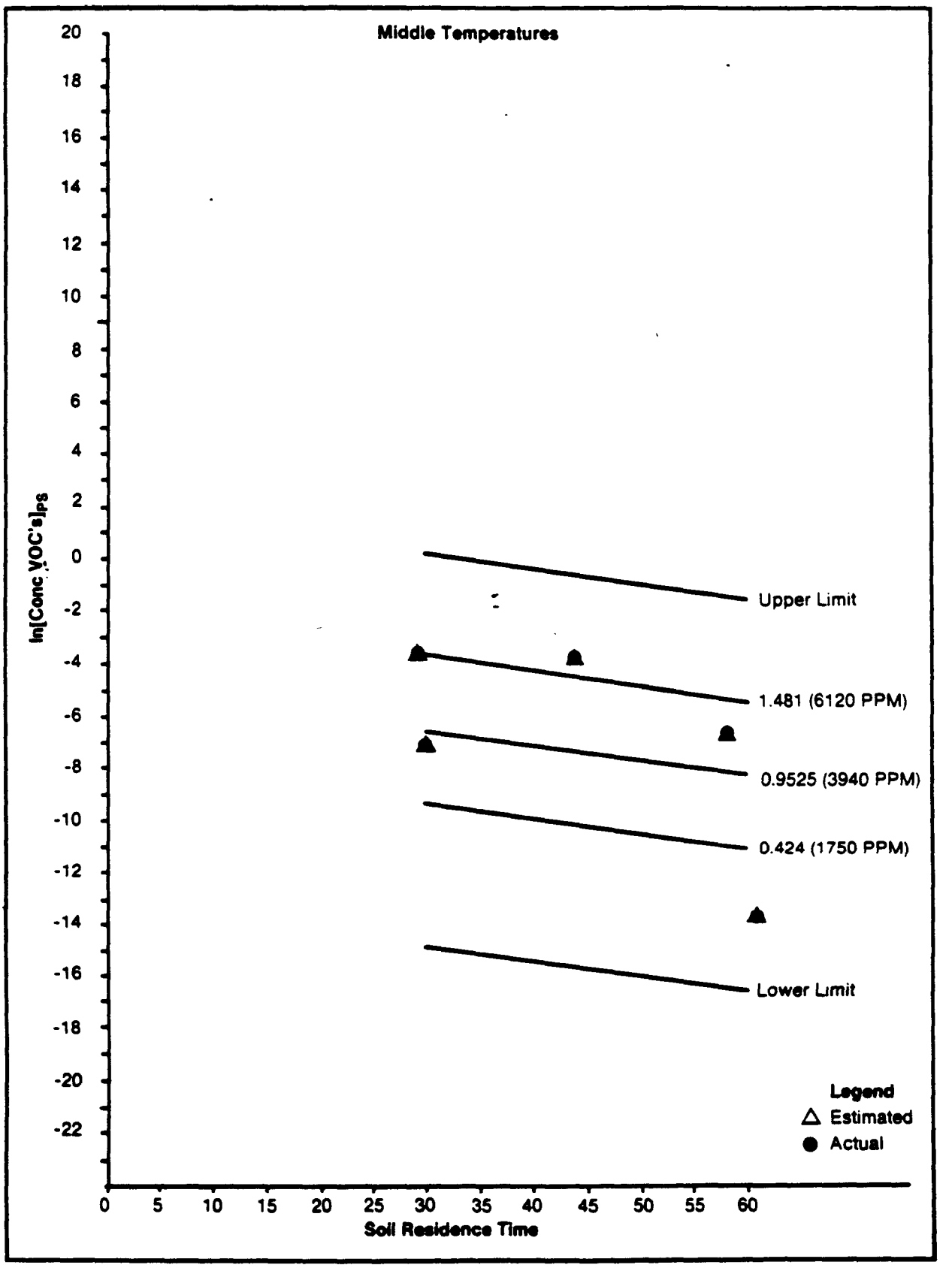

FIGURE 10-2 COMPARISON OF ACTUAL VERSUS ESTIMATED VALUES OF THE NATURAL LOGARITHM OF TOTAL VOC'S IN THE PROCESSED SOIL - MIDDLE TEMPERATURE RUNS

10.1.2.3.1 Total VOC concentration in the processed soil. The equation developed to estimate the natural logarithm of the total VOC's in the processed soil for a system operating a high temperatures is:

$$\ln [\text{TOT VOC's}]_{PS} = 1.5843 - (3.212 \times 10^{-5} * H)$$

$$+ (0.2784 * M_{FS}) - (0.1993 * T_R)$$

This equation is only valid for input and control variables within the following ranges:

TOT VOC's$_{FS}$:	0.135 - 4.651 (#/hr) (i.e., 757 ppm - 31,923 ppm)
M_{FS}:	15.5 - 20.6 (Percent by weight)
T_R:	28.93 - 60.2 (minutes)
F_A:	316 - 430 (#/hr)
H:	55,326 - 206,412 (Btu/hr)

The feed concentration and flow rate of air are not contained in the equation; however, the equation is only valid within the noted ranges.

10.1.2.3.1.1 Analysis of the regression coefficients. As expected, the estimated concentration in the processed soils decreases as the heat rate and residence time increase. Obviously, the higher the level of treatment, the lower the residual VOC concentration. As in the case of low and middle temperature test runs, the regression coefficient for the moisture in the feed soil is positive. As previously discussed, a higher moisture content has the potential to contain a higher concentration of VOC's in solution. Also, <u>for fixed operating conditions</u>, the heat input to the system may be absorbed by the moisture, thus decreasing the VOC volatization rate. Unexpectedly, the concentration of VOC's in the feed soil was not determined to be a significant factor in the equation. Absence of this factor cannot be attributed to low, insignificant amounts of contaminant in the feed soil as the feed concentrations were relatively high (i.e., average feed concentration of 9,640 ppm total VOC's). Possibly the feed concentration is not a highly significant factor because the operating temperature of the system (i.e., 150°C) was much higher than the boiling point of the major contaminants (i.e., Dichloroethylene - 49°C, trichloroethylene - 87°C, Porchloroethylene - 121°C, and xylene - 144°C).

10.1.2.3.1.2 Testing the validity of the equation. Actual values of the input and control variables were inserted into the equation to solve for the estimated values of the natural logarithm of the total VOC's in the processed soil. The estimated as well as the actual values are shown in Table 10-3. The average deviation between the actual and estimated values was 2.46, as shown in Table 10-3. The range of deviation was from 0.01 percent to 4.78 percent.

For illustration, the actual and estimated values of the natural logarithm of total VOC's in the processed soil is shown in Figure 10-3. Also included on this graph are constant heat rate lines corresponding to the low, medium, and high heat input to the system (i.e., 55,326 Btu/hr, 130,869 Btu/hr, and 206,412 Btu/hr, respectively). As shown, the equation is valid in the region bounded by the upper limit and lower limit. The upper and lower limits were derived from inserting the minimum and/or maximum values of the input and control variables into the equation and solving for concentration in the processed soils.

10.1.2.3.2 Temperature of the processed soil. The equation developed for estimating the temperature of the processed soil for a system operating at high temperatures is:

$$TEMP_{PS}: 324.9714 + (6.107 \times 10^{-5} * H) - (6.4424 * M_{FS})$$

$$- (18.0114 * M_{PS}) - (0.326 * F_I)$$

The equation is valid for a system operating with variables whose values are within the following ranges <u>only</u>:

H:	55,325 - 206,411 (Btu/hr)
M_{FS}:	15.5 - 20.6 (Percent by weight)
M_{PS}:	0.1 - 2.0 (Percent by weight)
F_I:	110.54 - 242.27 (#/hr)
T_R:	28.93 - 60.2 (minutes)

10.1.2.3.2.1 Analysis of the regression coefficients. The regression coefficient of heat rate is positive, indicating that the higher the heat input, the higher the temperature of the processed soil.

TABLE 10-3. COMPARISON OF ACTUAL AND ESTIMATED VALUES FOR THE NATURAL LOG OF THE TOTAL VOC CONCENTRATION IN THE PROCESSED SOIL - HIGH TEMPERATURES

Test run	ln [TOT VOC's]$_{PS}$ (actual)	ln [TOT VOC's]$_{PS}$ (estimated)	Deviation between actual and estimated (percent)
10	-7.584	-7.505	1.05
11	-6.588	-6.881	4.26
12	-5.178	-4.942	4.78
13	-7.876	-7.875	0.01
14	-8.079	-7.934	1.83
15	-5.017	-5.164	2.85
		Average	2.46

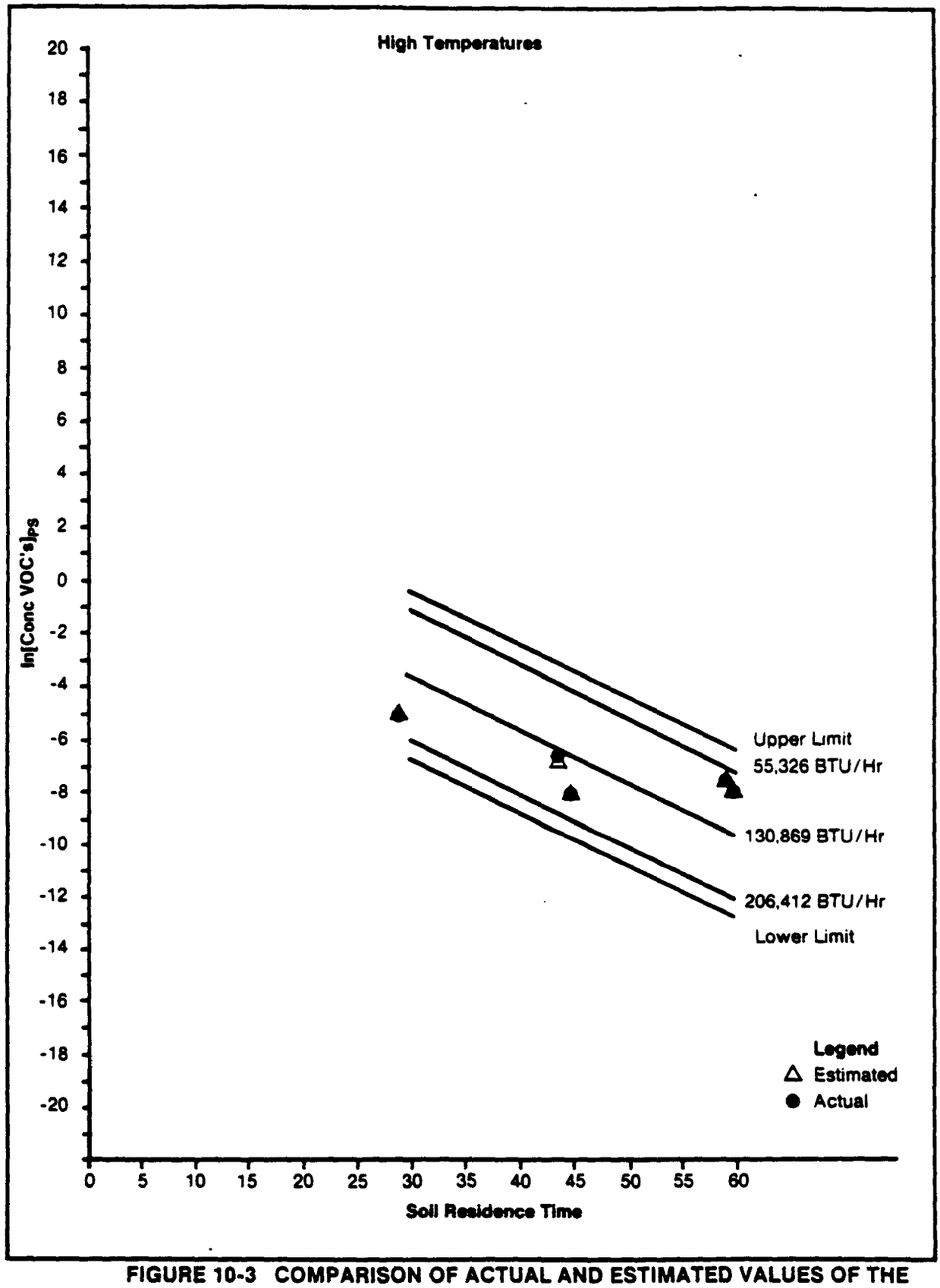

FIGURE 10-3 COMPARISON OF ACTUAL AND ESTIMATED VALUES OF THE NATURAL LOGARITHM OF TOTAL VOC CONCENTRATION IN THE PROCESSED SOIL - HIGH TEMPERATURE RUNS

Both moisture content of the feed soil and flow rate of inerts have negative regression coefficients. Therefore, increasing either of these variables would result in lowering the processed soil temperature. For these high temperature runs, moisture content of the processed soil also has a negative regression coefficient. It is suspected that this is due to the fact that all of these runs had processed soil temperatures well above the boiling point of water (i.e., 140 to 175°C). Within this regime, it is logical that an inverse relationship between processed soil temperature and moisture content would exist (i.e., the higher the processed soil temperature, the lower the soil moisture content).

10.1.2.3.2.2 Testing the validity of the equation. The validity of the correlation that was developed to estimate the temperature of the processed soil was tested using actual data. The actual soil temperatures corresponding to each test run as well as the estimated values are shown in Table 10-4. The correlation estimated the actual temperature within a deviation range of 0.25 percent to 0.85 percent. A graphical display of the actual and estimated values of the soil discharge temperatures is shown in Figure 10-4.

10.2 Emission control efficiency.

10.2.1 Controlled emissions.

10.2.1.1 Off-gas manifold system. Two modes of analysis were used to analyze the discharge gas in the three legs of the manifold systems: 1) a CEM system, and 2) a Bruker MM1 Mobile Mass Spectrometer. Each mode will be discussed separately in the following subsections.

10.2.1.1.1 CEM system. A comparison of the total VOC concentration as measured by the CEM system and GC/MS analyses is displayed in Appendix H, Table H-3 for the Phase I test runs and those Phase II test runs that were monitored. An AID was used during test runs 1 through 11; an OVA was used during test runs 12 through 18. Analysis of Table H-3 indicates that the OVA more accurately estimated the gross VOC concentrations in manifolds 1, 2, and 3 compared to the AID. The concentrations detected by the OVA during the Phase I test runs deviated 29 percent (average) from the GC/MS analytical values. Analysis of Table H-3, however, indicates that the OVA deviated from the

TABLE 10-4. COMPARISON OF ACTUAL AND ESTIMATED VALUES OF TEMPERATURE OF THE PROCESSED SOIL - HIGH TEMPERATURES

Test run	ln [TOT VOC's]$_{PS}$ (actual - °C)	ln [TOT VOC's]$_{PS}$ (estimated - °C)	Deviation between actual and estimated (percent)
10	158.66	159.26	0.38
11	137.34	137.84	0.36
12	143.27	143.78	0.35
13	175.27	174.44	0.48
14	175.33	175.77	0.25
15	140.30	139.12	0.85

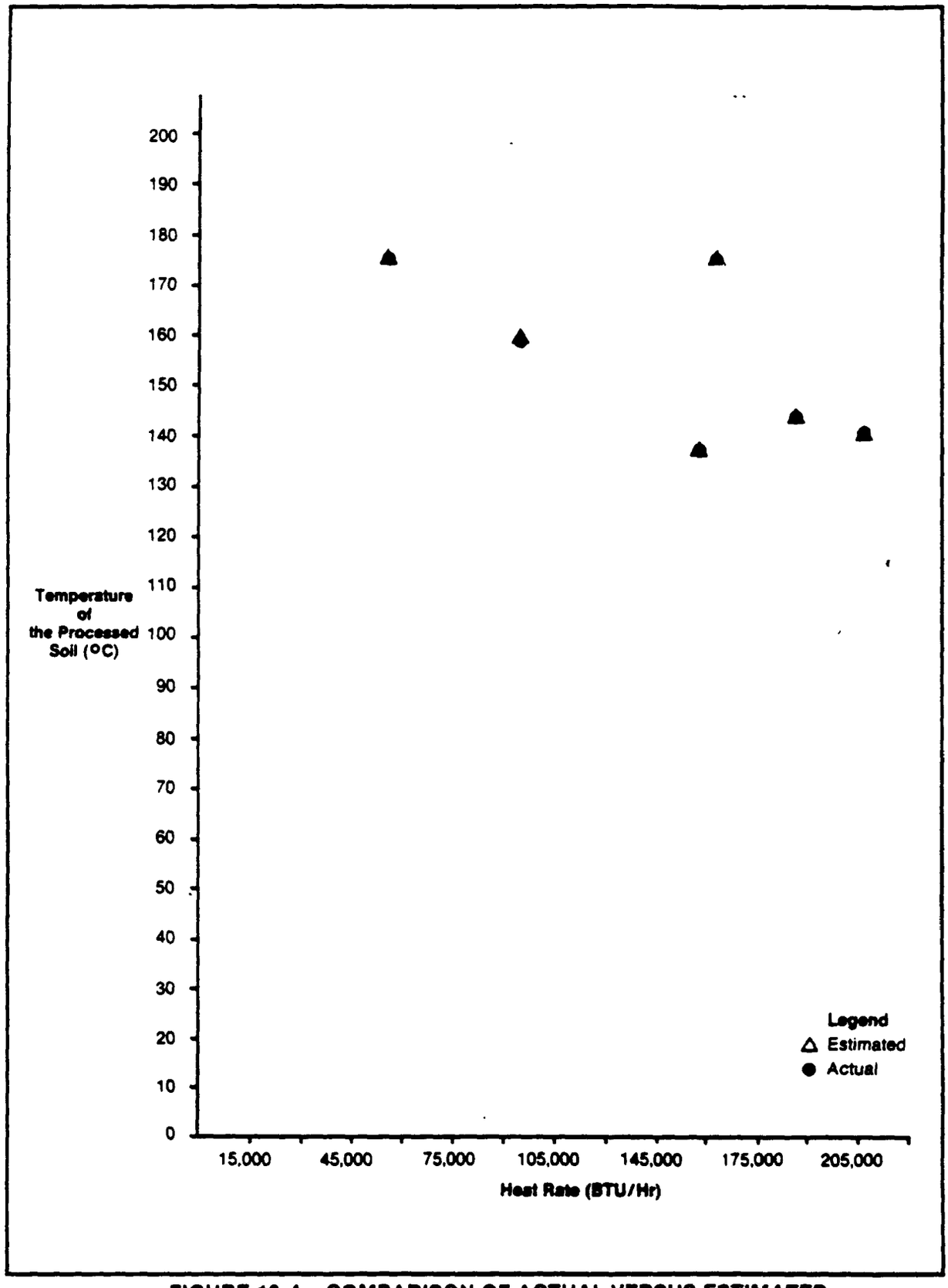

FIGURE 10-4 COMPARISON OF ACTUAL VERSUS ESTIMATED VALUES OF TEMPERATURE OF THE PROCESSED SOIL - HIGH TEMPERATURE RUNS

GC/MS analytical results by 89.41 percent during the Phase II test runs. This may be explained by considering the negative pressure which had to be overcome by the suction pump on the instrument. During Phase I test runs, the OVA was used in each of the three manifold lines each of which accounted for approximately one-third of the total flow. The suction pump on the OVA was obviously powerful enough to overcome the negative pressure in the lines. During the Phase II test runs, however, the OVA was connected to the afterburner inlet. The flow was three times higher at this location, and the negative pressure was greater; possibly, it was too high for the suction pump on the OVA to overcome. This may explain why the accuracy of the OVA for estimating VOC's in the discharge air was so much lower during the Phase II test runs. If the OVA is to be utilized in this capacity, the instrument manufacturer should be consulted to determine if the pump suction pressure is appropriate for the specific application.

10.2.1.1.2 Bruker MM1 Mobile Mass Spectrometer. The results from the Mobile Mass Spectrometer are displayed in Tables H-4, H-5, and H-6 in Appendix H. As mentioned, the MM1 was not calibrated for quantification, nor was the sampling method (simply placing the probe two inches from the sampling port) quantitative. The data can be used only in a relative sense, it cannot be converted to concentrations in air. Several features of the data are noted:

1. The base peak in all samples from Test Run 2 was at 166 atomic mass units (amu), which is characteristic of tetrachloroethene. However, since this compound was not a target compound during this run, relative quantification was not obtained. Analysis of Table 9-6 (VOC concentrations in the air discharge stream) indicates that during Test Run 2, the concentration of tetrachloroethylene was 237 ppm by volume. Tetrachloroethylene was the second major compound determined to be discharging from the unit. (Trichloroethylene was the most prominent at 375 ppm by volume.)
2. Generally, the samples from Test Run 4 contained the lowest levels of chlorinated hydrocarbons. Analysis of Table 9-6 lends credibility to this finding as shown by the following summary of the concentrations of total VOC's discharging in the air stream:
   Test Run 2 - 704 ppm by volume.
   Test Run 4 - 1.10 ppm by volume.
   Test Run 5 - 936 ppm by volume.

3. 1,1,1-Trichloroethene registered the greatest response during Test Run 5; however, no detectable levels of this compound were determined to be present in the GC/MS analytical results.
4. Aliphatic hydrocarbons were detected to be present in Test Runs 2 and 4. A portion of this response probably arose from the presence of emissions from the oil heater. Note that levels of aliphatic hydrocarbons do not drop off during baseline sampling events.
5. The sample probe was placed inside pails of contaminated soil. Headspace sampling of feed soil also confirmed the presence of the chlorinated hydrocarbons seen during the soil processing.
6. Base line sampling was performed in the same location as port sampling except that the port valve was closed. Ambient air (e.g., clean outside air) gives readings of approximately 2-2.5 arbitrary log units.

In summary, comparison of the MM1 data with those obtained by conventional methods (charcoal sampling, GC/MS analysis) indicates that reliable qualitative information is generated by the MM1. As mentioned previously, the data can only be used in a relative sense; however, considerable attention needs to be given to the sampling methods and quantitative instrument calibration prior to any attempts to use this instrument for quantitative analysis.

10.2.1.2 Afterburner outlet. The gases discharged from the thermal processor were contained and directed to the afterburner for thermal destruction. Stack tests were conducted to determine if exhaust emissions were in compliance with Federal and state regulations. A detailed discussion of results is contained in Subsection 11.2.

10.2.2 Fugitive emissions. As discussed, the VOC concentrations in the excavated and feed soils were monitored to determine the gross amount of VOC's which escaped as fugitive emissions. Table 9-2 displays the VOC concentrations for the excavated and feed soils in Phase I and Phase II, respectively. A summary table showing the average concentration of the specific VOC's in the feed and excavated soils is shown in Table 10-5. Review of this table indicates that in every case except xylene which is only semivolatile, the concentration

TABLE 10-5. COMPARISON OF VOC CONCENTRATIONS IN THE EXCAVATED AND FEED SOILS

Compound	VOC concentration in excavated soil (ppm by weight)	VOC concentration in feed soil (ppm by weight)	Fugitive emissions (percent by weight)
Dichloro-ethylene	252.30	135.40	46.33
Trichloro-ethylene	2,782.90	2,657.90	4.49
Tetrachloro-ethylene	744.60	599.20	19.53
Xylene	86.30	92.60	7.30
Other VOC's	38.40	20.20	47.40
Total VOC's	3,850.50	3,503.30	9.02

in the feed soil is lower than that of the excavated soil. Based on the soil samples, this indicates that fugitive emissions of VOC's occurred from the time of excavation to the time the soils were fed to the unit. The amount of fugitive emissions ranged from 4.49 percent to 47.40 percent for the specific VOC's. The fugitive emissions corresponding to the average total VOC's were 9.02 percent. It is important to note that the fugitive emissions are based on the corresponding soil sample results and not air monitoring. As soil is extremely nonhomogeneous, these values represent estimated fugitive emissions only.

10.3 Results of optimization runs.

10.3.1 VOC removal along the length of the unit. As shown in Table 9-6, the VOC concentrations were monitored in each leg of the manifold system during Test Runs 19 through 23. Specific VOC's are discussed separately.

10.3.1.1 Dichloroethylene. Detectable levels of dichloroethylene were observed under the following test conditions:

1. Residence Time - 60 minutes
   Soil Temperature - maximum (i.e., 224°C)
   Air Temperature - elevated
   Dichloroethylene Removal Efficiency - 92.71 percent
   Dichloroethylene in Processed Soil - 0.24 ppm by weight
2. Residence Time - 90 minutes
   Soil Temperature - maximum (i.e., 218°C)
   Air Temperature - elevated
   Dichloroethylene Removal Efficiency - 100 percent
   Dichloroethylene in Processed Soil - below detection limits

As shown in Table 9-6, during the 60-minute test run, the dichororethylene removal rate increased from 0.50 ppm by volume in leg 1 to a maximum value of 0.60 ppm by volume in leg 2, then decreased to 0.50 ppm by volume in leg 3 of the manifold system. Since the dichloroethylene removal efficiency was only 92.71 percent, the contaminant was not completely removed from the soil. VOC's were still being removed, indicating that under the operating conditions, the residence time was insufficient for complete removal.

In the case of the 90-minute test run, the dichloroethylene removal rate increased from 0.40 ppm by volume to 0.50 ppm by volume in legs 1 and 2, respectively, then decreased to a level that was below detection limits in leg 3. Analysis of the dichloroethylene removal efficiency (i.e., 100 percent) indicates that extension of the residence time, under similar operating conditions, removed a greater mass of dichloroethylene.

10.3.1.2 Trichloroethylene. Detectable levels of trichloroethylene were present in those test runs operating under the following conditions:

1. Residence Time - 60 minutes
   Soil Temperature - maximum (i.e., 224°C)
   Air Temperature - elevated
   Trichloroethylene Removal Efficiency - 67.48 percent
   Trichloroethylene in Processed Soil - 0.98 ppm by weight
2. Residence Time - 90 minutes
   Soil Temperature - maximum (i.e. 218°C)
   Air Temperature - elevated
   Trichloroethylene Removal Efficiency - 99.54 percent
   Trichloroethylene in Processed Soil - 0.01 ppm by weight

As shown in Table 9-6, during the 60-minute test run the trichloroethylene removal rate was below detectable levels in leg 1 and increased to 0.30 ppm by volume in legs 2 and 3 of the manifold system. As evidenced by the trichloroethylene removal efficiency (i.e., 67.48 percent), the length of the unit was insufficient to remove the contaminant at the fixed operating conditions. Trichloroethylene was still being removed in the last portion of the unit.

During the 90-minute test run, the trichloroethylene removal rate increased from below detectable levels in leg 1, increased to 0.30 ppm by volume in leg 2, and decreased to below detectable limits in leg 3 of the manifold system. Analysis of the trichloroethylene removal efficiency (i.e., 99.54 percent), however, indicates that not all the contaminant was removed from the soil. This indicates that at the corresponding temperature and residence time, a residual amount of trichloroethylene will remain in the soil. In this case, the concentration of trichloroethylene in the processed soil was 0.1 ppm.

10.3.1.3 Tetrachloroethylene. No detectable levels of tetrachloroethylene were determined to be present in the off-gas manifold system during Test Runs 19 through 23. Therefore, no analysis can be made regarding tetrachloroethylene removal rates.

10.3.1.4 Xylene. Detectable levels of xylene were present in the off-gas manifold system during Test Runs 19 through 23, which operated under the following conditions:

1. Residence Time - 60 minutes
   Soil Temperature - 150°C
   Air Temperature - elevated
   Xylene Removal Efficiency - 99.89 percent
   Xylene in Processed Soil - 0.05 ppm by weight
2. Residence Time - 60 minutes
   Soil Temperature - maximum (i.e., 224°C)
   Air Temperature - elevated
   Xylene Removal Efficiency - 99.34 percent
   Xylene in Processed Soil - 0.08 ppm by weight
3. Residence Time - 75 minutes
   Soil Temperature - maximum (i.e., 233°C)
   Air Temperature - elevated
   Xylene Removal Efficiency - 99.76
   Xylene in Processed Soil - 0.04 ppm by weight
4. Residence Time - 90 minutes
   Soil Temperature - 150°C
   Air Temperature - elevated
   Xylene Removal Efficiency - 99.79
   Xylene in Processed Soil - 0.14 ppm by weight
5. Residence Time - 90 minutes
   Soil Temperature - maximum (i.e. 218°C)
   Air Temperature - elevated
   Xylene Removal Efficiency - 99.84
   Xylene in Processed Soil - 0.02 ppm by weight

As shown in Table 9-6, for the test run operating at 150°C and 60-minute residence time, the xylene removal rate increased from 2.50 ppm by volume in leg 1 to 8.10 ppm by volume in leg 2 and decreased to 2.40 ppm by volume in leg 3 of the unit. This removal trend indicates that although the volatization rate of xylene peaked in the central portion of the unit, contaminant was still being removed from the soil as it was discharged. This indicates that under the operating conditions, soil temperature and/or residence time were insufficient to completely remove the contaminant.

Review of the 60-minute test run that operated at the maximum soil discharge temperature indicates that the xylene removal rate increased to a maximum in leg 3 of the unit. This suggests that xylene was still being removed from the soil and that increasing processed soil temperature from 150°C to 224°C was not sufficient to effect the complete removal of xylene.

A similar trend is displayed by the test run that operated at the maximum soil discharge temperature and 75-minute residence time. The xylene removal rate increased to a maximum in leg 3 of the manifold system, indicating that contaminant was still being removed from the soil as it was discharged from the unit. This suggests that increasing the residence time at maximum soil temperature was insufficient to completely remove the contaminant.

Analysis of the 90-minute test runs indicates that xylene was still being removed in the last portion of the unit. During the test run operating at a soil temperature of 150°C, the xylene removal rate decreased from 6.50 ppm by volume in leg 1 to 6.00 ppm by volume in leg 2 and, finally, to 2.60 ppm by volume in leg 3 of the manifold system. The test run that operated at the maximum soil discharge temperature (i.e., 218°C) displayed a xylene removal rate that increased from 1.10 ppm by volume in leg 1 to 1.80 ppm by volume in leg 2, then decreased to 1.30 ppm by volume in leg 3 of the manifold system. This indicates that the longest residence time and maximum soil discharge temperature attainable by the thermal processor were not sufficient to completely remove the xylene. In this case, the xylene residual was 0.02 ppm by weight in soil. Although a residual remained, in a remedial action, this level may be more than sufficient as a clean-up target. In fact, for all five runs, the xylene removal efficiencies were 99.34 percent or greater.

10.3.1.5 Other VOC's. Other VOC's (i.e. chloromethane, ethylbenzene, methylene chloride, 1,1,2,2-tetrachloroethane, and toluene) were detected during each test run. The operating conditions were as follows:

1. Residence Time - 60 minutes
   Soil Temperature - 150°C
   Air Temperature - elevated
   Other VOC's Removal Efficiency - 97.11 percent
   Other VOC's in Processed Soil - 0.74 ppm by weight
2. Residence Time - 60 minutes
   Soil Temperature - maximum (i.e., 224°C)
   Air Temperature - elevated
   Other VOC's Removal Efficiency - 84.11 percent
   Other VOC's in Processed Soil - 1.35 ppm by weight
3. Residence Time - 75 minutes
   Soil Temperature - maximum (i.e., 233°C)
   Air Temperature - elevated
   Other VOC's Removal Efficiency - 98.88
   Other VOC's in Processed Soil - 0.28 ppm by weight

4. Residence Time - 90 minutes
   Soil Temperature - 150°C
   Air Temperature - elevated
   Other VOC's Removal Efficiency - 96.29
   Other VOC's in Processed Soil - 1.43 ppm by weight

5. Residence Time - 90 minutes
   Soil Temperature - maximum (i.e. 218°C)
   Air Temperature - elevated
   Other VOC's Removal Efficiency - 97.50
   Other VOC's in Processed Soil - 0.53 ppm by weight

Contaminant was still being removed in leg 3 of the manifold system during each of the above test runs. This indicates that the operating temperatures and residence times were insufficient to completely remove the other VOC's. During the 60-minute test run at 150°C the contaminant removal rate increased from 1.10 ppm by volume in leg 1 to a maximum value of 5.30 ppm by volume in leg 2, and finally decreased to 1.20 ppm by volume in leg 3 of the manifold system. Analysis of the 90-minute test run that also operated at 150°C displays a similar trend. The other VOC's removal rate slightly decreased from 6.50 ppm by volume in leg 1 to 6.00 ppm by volume in leg 2 and further decreased to 2.60 ppm by volume in leg 3 of the manifold system. Comparison of these two test runs (i.e., 60 minutes at 150°C and 90 minutes at 150°C) indicates that the effect of extending the residence time beyond 60 minutes is minimal.

The remainder of the test runs operated at a maximum soil discharge temperature. The contaminant removal rate followed the same trend for the 60-minute and 75-minute test runs. The other VOC's removal rate increased over the length of the unit to a maximum value in leg 3 of the manifold system. During the 90-minute test run, the other VOC's removal rate increased from 1.10 ppm by volume in leg 1 to a maximum value of 1.80 ppm by volume in leg 2, and decreased to 1.30 ppm by volume in leg 3.

10.3.1.6 Total VOC's. At the target soil discharge temperature of 150°C, the general trend of the total VOC's removal rate is to peak in the first two-thirds of the unit, and drop off in the last portion of the processor. Total VOC's were still being removed from the soil as it was discharged from the unit. This indicates that the soil temperature and residence times were insufficient to completely remove the VOC's.

At the maximum attainable soil discharge temperature, the general trend of the total VOC's removal rate is to increase along the length of the unit and reach a maximum value in leg 3 of the manifold system. This indicates that at the maximum attainable soil temperature and residence times evaluated, a residual of total VOC's will remain in the soil. However, the additional mass of VOC's removed by increasing soil temperature and residence time was relatively minute.

It is important to remember that the purpose of Test Runs 19 through 23 was to determine if general trends of contaminant removal exist. Simply because contaminant is still being removed in the last portion of the unit does not mean that in order to be effective a residence time of greater than 90 minutes and a soil discharge temperature of over 233°C are required. The residual concentration is generally the single most important consideration in a remedial action. Although VOC's were still being removed in each test run that was analyzed, the residual VOC concentration in the processed soil may have been much lower than required in a clean-up effort.

10.3.2 Reproducibility of treatment. To the fullest extent possible, identical operating conditions were maintained during Test Runs 24, 25, and 26 to compare VOC removal efficiencies and thus determine the "reproducibility" of treatment. The operating conditions were as follows:

1. Residence Time - 60 minutes
2. Soil Discharge Temperature - 50°C
3. Air Inlet Temperature - ambient

The composition/conditions corresponding to the feed and processed soils are contained in Tables 9-3, 9-4, and 9-5. For convenience, a summary is included in Table 10-6. As shown on this table, the total VOC concentrations in the feed soil were not in the same order of magnitude. As discussed in Subsection 10.1.2.1.1, the concentration of total VOC's in the feed soil directly impacts the concentration of total VOC's in the processed soil for the low temperature runs. Since the operating conditions corresponding to all three test runs were "identical," the total VOC's concentration in Test Run 26 would be expected to be greater than that of Test Run 25, which in turn would be expected to be greater than that corresponding to Test Run 24. Analysis of Table 10-6 shows this to be the case. This lends credibility to the equations developed for estimating the total VOC concentration in processed soil for low temperature runs. If the equations hold, therefore, the treatment is reproducible if the feed soil conditions (i.e., moisture and total VOC concentration) are comparable. This is true for low, medium, and high operating temperatures.

TABLE 10-6. SOIL COMPOSITION/CONDITIONS FROM TEST RUNS 24, 25, AND 26 (REPRODUCIBILITY OF TREATMENT)

	Test run 24	Test run 25	Test run 26
Total VOC concentration in feed soil (ppm by weight)	365.52	1,650.60	3,324.00
Total VOC concentration in processed soil (actual) (ppm by weight)	7.42	43.94	111.99
Total VOC concentration in processed soil (estimated by correlation for low temperature test runs) (ppm by weight)	6.72	56.05	97.41
VOC removal efficiency	98.22	97.55	97.02

10.3.3 Reprocessing of treated soils that contain a contaminant residue. Test Runs 27 and 28 evaluated the feasibility of reprocessing soils that still contained a residual concentration.

Operating conditions for Test Runs 27 and 28, respectively, were as follows:

1. Residence Time - 60 minutes
2. Soil Discharge Temperature - maximum (i.e., 174.58°C)
3. Air Inlet Temperature - ambient

1. Residence Time - 90 minutes
2. Soil Discharge Temperature - maximum (i.e., 185°C)
3. Air Inlet Temperature - ambient

Processed soils from Test Run 2 were selected for treatment, primarily because the moisture content was relatively high (i.e., 7 percent) and dust generation would be minimized during feed operations. For convenience, a summary of soil composition/conditions corresponding to Test Runs 27 and 28 is included in Table 10-7. As shown in this table, the total VOC concentrations in the feed soil vary by nearly a factor of four; however, as discussed in Subsection 10.1.2.3.1, the total VOC concentration in the feed soil does not have a strong impact on the concentration in the processed soil for high temperature runs. A comparison can therefore be made. Analysis of Table 10-7 indicates two things. First, a residual concentration existed in the processed soils of each run. Second, increasing the residence time reduced the residual concentration significantly (even though the feed concentration in the 90-minute test run was higher than that of the 60-minute test run). As a reminder, the purpose of a remedial action will be to process soil to achieve a target VOC concentration. Although a residual existed in the processed soils corresponding to Test Runs 27 and 28, the VOC concentrations (i.e., 2.76 ppm and 0.92 ppm, respectively) may be more than sufficient when compared to the target concentration.

10.4 Miscellaneous observations.

10.4.1 Soil density. In general, the density of the feed soil was higher than that of the processed soil. The actual values are contained in Appendix F. For convenience, a summary of the average soil densities corresponding to the high, medium, and low temperature test runs is shown on Table 10-8. As shown, the difference in operating temperatures did not significantly affect the processed soil densities.

TABLE 10-7. SOIL COMPOSITION/CONDITIONS FROM TEST RUNS 27 AND 28 (REPROCESSING OF TREATED SOILS)

	Test run 27	Test run 28
Total VOC concentration in feed soil (ppm by weight)	226.00	831.90
Total VOC concentration in processed soil (ppm by weight)	2.76	0.92
VOC removal efficiency	98.92	99.91

TABLE 10-8. AVERAGE SOIL DENSITIES FOR LOW, MEDIUM, AND HIGH TEMPERATURE TEST RUNS

Density (#/cu ft)	Low temperature test runs	Middle temperature test runs	High temperature test runs
Feed Soil	91.23	85.47	94.02
Processed Soil	75.29	72.62	75.96

10.4.2 Soil appearance. The feed soils were generally wet, nonhomogeneous, clumps of soil. Native soil was a light orange-brown in color. Contaminated (fill) soils were very dark and sometimes appeared to be saturated with a black oily substance.

The processed soils were dry, homogeneous, fine particles. Due to the decrease in moisture content, the processed soils had a tendency to generate fugitive dust. Processed soils that corresponded to the black contaminated (fill) soils retained their dark appearance.

11. COMPARISON OF TEST RESULTS TO REGULATORY CRITERIA

The following subsections deal with portions of the Code of Federal Regulations (CFR). The referenced sections are included in Appendix H.

11.1 Processed soils.

11.1.1 Criteria for classification of a hazardous waste. According to 40 CFR Part 261, a solid waste is classified as a hazardous waste if it meets at least one of the following criteria:

1. It is not excluded from regulation as a hazardous waste under 261.4 (b) (i.e., household waste, solid waste returned to the soil as fertilizer, mining overburden, fly-ash waste, drilling fluids, wastes which fail the EP toxicity test because chromium is present, solid waste from the extraction, beneficiation, and processing of ores and minerals, cement kiln dust waste, solid waste which consists of wood or wood products which fails the EP toxicity test only).
2. It exhibits any of the characteristics of hazardous waste identified in Subpart C of 40 CFR Part 261 (i.e., ignitability, corrosivity, reactivity, EP toxicity).
3. It is listed in Subpart D of 40 CFR Part 261 and has not been excluded from the lists in Subpart D under 40 CFR 260.22 (i.e., regulatory amendment to exclude a waste at a particular facility because the waste does not meet any of the criteria under which the waste was listed as a hazardous waste).
4. It meets the criteria listed in 40 CFR 261.11 (i.e., exhibits any of the characteristics of hazardous waste identified in Subpart C; it has been found to be fatal to humans in low doses; it contains any of the toxic constituents listed in Appendix VIII).
5. It is a mixture of a solid waste and a hazardous waste that is listed in 40 CFR Subpart D solely because it exhibits one or more of the characteristics of hazardous waste identified in 40 CFR Subpart C, unless the resultant mixture no longer exhibits any characteristic of hazardous waste identified in Subpart C.
6. It is a mixture of solid waste and one or more hazardous wastes listed in 40 CFR Subpart D and has not been excluded under 40 CFR 260.22.

11.1.2 Classification of LEAD processed soils. The classification of processed soils must be on a case-by-case basis depending on the constituents in the feed soils. In this case, the LEAD processed soils are classified as a hazardous waste if any of the following criteria are met:

1. The soil constituents exhibit any of the characteristics of hazardous waste identified in Subpart C of 40 CFR Part 261. The potential characteristics would be ignitability (i.e., xylene) and toxicity (i.e., trichloroethylene and tetrachloroethylene).
2. The concentrations of those contaminants listed in Subpart D of 40 CFR Part 261, i.e., trichloroethylene (F002), tetrachloroethylene (F002), and xylene (F003) or Appendix VIII (i.e., trans-1,2-dichloroethylene) are detectable.

11.1.3 Delisting of the processed soils. It is possible to have the processed soils that are technically classified as hazardous waste "delisted" from Federal regulations. According to 40 CFR 260.20, the Administrator of the EPA may be petitioned to modify or revoke any provision in the CFR. Specifically, 40 CFR 260.22 includes regulations concerning petitions to amend Part 261 to exclude a waste produced at a particular facility. To be successful, the petitioner must demonstrate to the satisfaction of the Administrator that the waste does not meet any of the criteria under which the waste was listed as a hazardous waste.

In the case of LEAD soils, the petitioner must demonstrate all of the following:

1. The processed soils do not contain those compounds listed in Subpart D of 40 CFR Part 260 in sufficient concentration to exhibit the characteristics of ignitability (due to xylene) or toxicity (due to trichloroethylene and tetrachloroethylene).
2. The processed soils do not contain those toxic constituents listed in Appendix VIII (i.e., trans-1,2-dichloroethylene) in sufficient concentration to pose a substantial present or potential hazard to human health or the environment when improperly treated, stored, transported or disposed of, or otherwise managed.
3. The processed soils do not exhibit the characteristics of ignitability, corrosivity, reactivity, or EP toxicity.

11.2 <u>Stack emissions</u>. Stack tests were conducted during Test Runs 8, 9, and 10. Stack emissions were tested for VOC's, particulates, hydrogen chloride, and fixed gases.

11.2.1 Principal organic hazardous constituent (POHC) destruction and removal efficiency. Specific regulations for nonincinerator thermal treatment processes have not been promulgated. Therefore, this section compares the results of this program to the Federal regulations for hazardous waste incineration contained in 40 CFR 264.340 to 264.351.

According to 40 CFR 264.342, the POHC's in the waste feed must be treated to the extent required by the performance standard of 264.343. For the destruction of gases generated by the LEAD soils, the POHC's were identified to be trichloroethylene, dichloroethylene, tetrachloroethylene, and xylene. The performance standard dictates that an incinerator must achieve a destruction and removal efficiency (DRE) of 99.99 percent for each POHC. DRE is determined for each POHC from the following equation:

$$DRE = \frac{W_{in} - W_{out}}{W_{in}}$$

Where: W_{in} = mass feed rate of one POHC in the waste stream feeding the incinerator

W_{out} = mass emission rate of the same POHC present in exhaust emissions prior to release to the atmosphere

Stack tests conducted during Test Runs 8, 9, and 10 indicated that no detectable levels of the POHC's were determined to be present in the exhaust emissions. The DRE for each POHC, therefore, was 100 percent during each of the three selected test runs.

11.2.2 Particulate emissions. According to 40 CFR 264.343 (c), an incinerator burning hazardous waste must not emit particulate matter in excess of 180 milligrams per dry standard cubic meter (0.08 grains per dry standard cubic foot) when corrected for the amount of oxygen in the stack gas according to the formula:

$$P_c = P_m \times \frac{14}{21-y}$$

Where: P_c = the corrected concentration of particulate matter

P_m = the measured concentration of particulate matter

Y = the measured concentration of oxygen in the stack gas

The particulate emissions corresponding to Test Runs 8, 9, and 10 were 0.071 grains/dry standard cubic foot, 0.04 grains/dry standard cubic foot, and 0.06 grains/dry standard cubic foot, respectively. Stack tests demonstrated that particulate emissions during the three selected test runs were below the regulatory limit of 0.08 grains/dry standard cubic foot.

11.2.3 HCl emissions. According to 40 CFR 264.343(b), an incinerator burning hazardous waste and producing stack emissions of more than 1.8 kilograms per hour (4 pounds per hour) of HCl must control HCl emissions such that the rate of emission is not greater than the larger of either 1.8 kilograms per hour or 1 percent of the HCl in the stack gas prior to entering any pollution control equipment. Since there was no equipment to control the amount of hydrogen chloride in the afterburner off-gases, precautions were taken to ensure that HCl emissions did not exceed the allowable rate of 4 pounds per hour. In the planning stages of the project, the feed soil rate was determined based on an assumed concentration (i.e., 10,000 ppm) of dichloroethylene (the major contaminant), complete conversion to HCl, and the maximum allowable emission rate of 4 pounds of HCl per hour. The corresponding feed soil rate was approximately 500 pounds per hour. The HCl mass emission rates corresponding to Test Runs 8, 9, and 10 were 0.75 lbs/hr, 1.80 lbs/hr, and 1.55 lbs/hr, respectively. Therefore, the HCl mass emission rates did not exceed the regulatory limit of 4 lbs/hr. A discussion of potential equipment to control HCl emissions is contained in Section 12.

12. FULL-SCALE DESIGN CONSIDERATIONS

12.1 Modifications to full-scale design. The purpose of the pilot investigation was to test the feasibility of the thermal stripping technology. As such, the equipment was pilot scale and could only handle a relatively low soil feed rate (i.e., 385 pounds per hour maximum). A full-scale system would be designed to handle much larger soil feed rates.

12.1.1 Feed system. A practical application would enable backhoes to directly dump the contents of their bucket into a large feed hopper. A screw conveyor, or similar piece of equipment, would be located in the bottom of the hopper to feed soil to the unit at the appropriate rate. As the soil may contain rocks and other large items, it would be advisable to equip the feed soils hopper with a mesh screen that would segregate larger items.

12.1.2 Thermal processor. The size of the thermal processor would be large enough to accommodate a high soil feed rate. The tolerance between the flights of the screws and the trough would be wide enough to process rocks or large items without jamming the system. In the event of a jam, the rotation of the screws would be able to reverse direction to clear the jam. It would also be beneficial to equip the dome of the processor with ports for easy access in the event of a jam. As a precaution, the screws and feed system should be electrically connected to the soil discharge system. If there were a jam or clog at the soil discharge conveyor, the screws and feed system would stop operation. This would prevent soil from backing up in the processor. An alarm system should sound when a component becomes nonoperational. A full-scale system should also be designed to operate with circuit breakers, not fuses.

12.1.3 Heating medium. Although Therminol 66 was used in this application, it may be more economical to employ steam as a heating medium, depending on availability of an uncontaminated water source and the desired soil discharge temperature.

12.1.4 Soil discharge. A screw conveyor would also be used to discharge soils. The screws would have the option to operate in a reverse direction to clear jams. Since dust generation is likely, perhaps a fine mist of water could contact the soils upon discharge. The unit could be elevated to allow direct discharge into a dump truck or storage bin.

12.1.5 Air systems. It is important to inhibit air infiltration to the processor in order to control the amount of combustion air, temperature, etc. Therefore, provisions must be made to ensure the system is airtight. Sufficient head can be maintained in the feed hopper by ensuring sufficient soil is available to seal the unit. However, a rotary-valve would be required in the discharge end of the processor. To preclude jamming problems inherent in the pilot study, the vanes of the valve should be constructed of flexible material such as rubber. The valves should be able to operate in both directions (i.e., clockwise, counterclockwise) so that in the event of a jam, the direction of the valve could be reversed in order to clear the jammed material.

12.1.5.1 Inlet air. As demonstrated, an elevated air inlet temperature does not enhance contaminant volatilization; therefore, ambient air would be utilized in a full-scale operation.

12.1.5.2 Discharge air. During the pilot investigation, multiple air discharge lines were used to evaluate the contaminant removal trends. However, there would be no need to have more than one discharge air line in a full-scale system. Using the discharge air as combustion air worked well in this application; however, in a long-term situation it would not be advisable. Particulate/dust would most likely clog the burner ports and induced draft fan.

A full-scale system would most likely require pollution control equipment. Anticipated emission problems include particulate and HCl/acidic gases. To address these concerns, a number of options are available, depending on the level of control required.

If particulate emissions are the only problem (i.e., the concentration of chlorinated VOC's in the feed soil are relatively low and the corresponding mass of HCl generated is below the allowable limit of 4 pounds per hour), a simple process modification may be sufficient. For example, the dry processed soil could be moistened with a water mist at the discharge end of the unit, reducing dust generation and particulate in the off-gases. If the water spray was not sufficient, a mechanical separator (i.e., cyclone) could be installed between the processor and afterburner where the temperature and flow of the air stream are low. For even greater particulate removal, a fabric filter could be used instead of a mechanical separator. However, since a high moisture content is inherent in the discharge air stream, it may be necessary to elevate the temperature of the stream to assure that the water remains in the vapor form.

If HCl/acidic gases are the only problem, a scrubber system could be installed downstream of the afterburner. Discharge gases (approximately 1000°C) would be cooled in a quench section prior to entering a packed tower where the acidic off-gas stream would be scrubbed with a caustic solution for neutralization. The scrubber liquor (i.e., water and salts generated upon combination of acid and caustic) would technically be classified as a hazardous waste. However, a petition could be submitted to the appropriate regulatory agency to request that the scrubber liquor be "delisted." If successful, the delisted liquor could be discharged to a publicly owned treatment works (POTW).

In the event that particulate and HCl/acidic gases are both problems, a combination system including a venturi scrubber (to quench the discharge gases and to remove particulate) followed by a packed tower (to scrub acidic gases) could be installed downstream of the afterburner.

12.2 Example calculation using correlations to design a full-scale system. The correlations presented in Section 10 can be used for design of a full-scale system to treat LEAD site soils. The following example is presented for illustration:

Hypothetical site characteristics:

TOT VOC's$_{FS}$ = 1,000 ppm
M_{FS} = 20 percent by weight
TOT VOC's$_{PS}$ = 10 ppm (i.e., assumed clean-up objective)

Suppose, in order to expedite cleanup, the feed rate of soil to the unit is high, e.g., two tons per hour (4,000 pounds per hour). Assume a hot oil source is available to supply 100,000 Btu per hour. The variables must be in the correct units to utilize the equation.

$$\text{TOT VOC's}_{FS} \ (\#/hr) = \frac{1000 \ \# \ \text{TOT VOCFS}}{10^6 \ \# \ \text{soil}} \times \frac{4000 \ \# \ \text{soil}}{hr}$$

$$= 4.0 \ \#/hr$$

$$\text{TOT VOC's}_{PS} \ (\#/hr) = \frac{10 \ \# \ \text{TOT VOCPS}}{10^6 \ \# \ \text{soil}} \times \frac{4000 \ \# \ \text{soil*}}{hr}$$

$$= 0.04 \ \#/hr$$

Review of the range of values associated with each correlation for total VOC's in the feed soil indicates that the equation developed for high temperatures may be used (i.e., the range of total VOC's in the feed soil was 0.135 #/hr to 4.651 #/hr).

Substituting the appropriate values will enable derivation of the residence time required for processing.

$$\ln [\text{TOT VOC's}_{PS}] = 1.5843 - (3.212 \times 10^{-5} \times H) + (0.2784 \times M_{FS}) - (0.1993 \times T_R)$$

$$\ln [0.04] = 1.5843 - (3.212 \times 10^{-5} \times 100{,}000) + (0.2784 \times 20) - (0.1993 \times T_R) - 3.219 = 1.5843 - 3.212 + 5.568 - (0.1993 \times T_R)$$

Solving for residence time:

$$T_R = \frac{-3.219 - 1.5843 + 3.212 - 5.568}{-0.1993}$$

T_R = 35.92 minutes (assuming a processed soil temperature of 150°C)

If the residence time is fixed, the same procedure may be repeated, solving for the value of the heat rate.

---

*This is a conservative estimate since the evaporation of moisture is not taken into account.

12.3 Economics of a full-scale system. Evaluation of the economics of a full-scale system was not undertaken as part of this study. Rather, as part of a separate subtask, a study will be completed to evaluate the economics corresponding to various sites (i.e., different size and waste characteristics). The evaluation will include the general approach outlined below:

(a) Four separate sizes of low temperature thermal treatment systems will be evaluated in order to determine the sensitivity of project costs to alternative system sizes.
(b) Two separate system configurations will be evaluated (i.e., Option 1 - Without Flue Gas Scrubbing and Option 2 - With Flue Gas Scrubbing) in order to determine the sensitivity of project costs to the requirement for flue gas scrubbing.
(c) Three separate quantities of soil to be processed will be evaluated in order to determine the sensitivity of project costs to site size (i.e., soil quantity) and to determine which system sizes are most cost effective for various size sites.
(d) A uniform set of economic assumptions will be established for all options evaluated so that the costs can be compared on an "apples-to-apples" basis. A sensitivity analysis will be presented to determine the impact upon project costs of varying the economic assumptions.

13. CONCLUSIONS AND RECOMMENDATIONS

13.1 Conclusions. Based on review of the data associated with all test runs, the following conclusions are presented:

1. The low temperature thermal stripping technology is an effective means of removing VOC's from soil.
2. VOC removal efficiencies associated with an elevated air inlet temperature are generally lower than those associated with an ambient air inlet temperature.
3. An exponential relationship exists between VOC concentrations in the processed soil and those input and control variables determined to have a significant contribution in the statistical analysis.
4. Correlations developed to predict the VOC concentrations in the processed soil and soil discharge temperature are site-specific and applicable to three distinct soil discharge temperature ranges. The validity of the correlations for different soil and contaminant types is questionable.
5. Moisture in the feed soil and residence time are statistically significant variables in all correlations (i.e., low, medium, and high soil discharge temperatures).
6. An OVA can be utilized to estimate the VOC concentrations in the discharge air stream; however, the instrument manufacturer should be consulted to determine if the pump suction pressure is appropriate for the specific application.
7. A mobile mass spectrometer can be utilized to generate reliable qualitative information concerning VOC's in the discharge air stream. However, considerable attention needs to be given to sampling methods and quantitative instrument calibration.
8. Fugitive emissions of VOC's occurred from the time of excavation of soils to the time soils were fed to the thermal processor (estimated total VOC's fugitive emissions was 9.02 percent).
9. The low temperature thermal processor can be designed to achieve specific VOC clean-up objectives. The level of residual VOC's in the processed soil is a direct and predictable function of:

   (a) VOC concentration in the feed soil.
   (b) Processed soil temperature.
   (c) Soil residence time within the thermal processor.
   (d) Heat input rate to the thermal processor.
   (e) Moisture content of the feed soil and processed soil.

Depending on the VOC type and range of concentrations in the feed soil for a specific site, the other variables (i.e., processed soil temperatures, residence time, heat input, and moisture content) can be incorporated within the overall system design to achieve a wide range of target clean-up levels (i.e., 100 ppm, 10 ppm, 1 ppm, etc.). However, if the clean-up objective is "no detectable VOC's in the processed soils," then, based on this field demonstration program, a processed soil temperature of higher than 233°C and a residence time of over 90 minutes would be required.

10. Treatment is reproducible and comparable if feed soil composition/conditions are similar (i.e., moisture, VOC concentration).
11. Reprocessing of treated soils that still contained a contaminant residue reduced the VOC concentration significantly; however, a residual still existed.
12. Stack tests conducted during Test Runs 8, 9, and 10 indicated that no detectable levels of the principal organic hazardous constituents (POHC's) were determined to be present in the exhaust emissions (i.e., 100 percent destruction removal efficiency (DRE)).
13. Stack tests conducted during Test Runs 8, 9, and 10 demonstrated that particulate and hydrogen chloride emissions did not exceed regulatory limits during these test runs (No comment can be made regarding other test runs as no stack testing was completed).

13.2 Recommendations. Based on the results of this field demonstration program, the following recommendations are presented:

1. Further development of the low temperature thermal stripping technology is warranted. This further development should include:

   - An in-depth economic analysis of alternative system sizes and configurations and selection of the most advantageous alternative.
   - Preparation of performance specifications and a technical data package for the selected alternative(s).
   - Development of heat transfer coefficients for the thermal processor.

2. The economic analysis should include a comparison to another baseline technology such as rotary kiln incineration.
3. The technical data package should be designed to provide sufficient information to support bid document preparation for application of this technology at DOD installations.
4. Additional pilot scale testing is recommended prior to the design of a full-scale system for soil and contaminant types other than those tested.

WESTON

REFERENCES

1. USATHAMA Installation Assessment of Letterkenny Army Depot, January 1980.

2. Battelle, Interim Report, Environmental Contamination Survey of Letterkenny Army Depot (LEAD), Part 1: Exploratory Phase, Draft, May 1982.

3. Letterkenny Army Depot Remedial Investigation and Feasibility Study, WESTON Report No. DRXTH-AS-CR-83247, February 1984.

4. Test Plan For a Pilot Investigation of Low Temperature Thermal Stripping of Volatile Organic Compounds From Soil at Letterkenny Army Depot (LEAD), Draft Version, June 1985.

5. Code of Federal Regulations, Title 40, Part 260, Appendix A, "Standards of Performance For New Stationary Sources," 18 August 1977.

6. Users Manual, Statistics: Multiple Linear Regression, Plot 50-4050DO4, Tektronix, Inc., Beaverton, Oregon, July 1982.

Distribution List

	Copies
Defense Technical Information Center Cameron Station Alexandria, Virginia 22314	14
Defense Logistics Studies Information Exchange US Army Logistics Management Center Fort Lee, Virginia 23801	2
Commander US Army Toxic and Hazardous Materials Agency Aberdeen Proving Ground, Maryland 21010-5401	32
Commander Letterkenny Army Depot Chambersburg, Pennsylvania 17201-4170	2

N. Glynn
980-TSI-RT-EUQs

Installation Restoration General Environmental Technology Development

REPORT NO. AMXTH-TE-CR-86074

Task 11. Pilot Investigation of Low Temperature Thermal Stripping of Volatile Organic Compounds (VOC's) From Soil

Volume 2 - Appendices

June 1986

Distribution unlimited, approved for public release

Prepared for:
U.S. ARMY TOXIC AND HAZARDOUS MATERIALS AGENCY
Aberdeen Proving Ground (Edgewood Area), Maryland 21010

WESTON
DESIGNERS CONSULTANTS
Roy F. Weston, Inc
West Chester
Pennsylvania

WESTON

TABLE OF CONTENTS

		Page
APPENDIX A -	ORGANIC WASTE CHARACTERISTICS OF SITE SOILS AT LEAD (DETERMINED DURING PRELIMINARY INVESTIGATIONS)	A-1
APPENDIX B -	GRAIN SIZE GRADATION CURVES CORRESPONDING TO FILL SOIL AND NATIVE SOIL	B-1
APPENDIX C -	AIR SAMPLING TECHNIQUES	C-1
APPENDIX D -	FEDERAL REGULATIONS	D-1
APPENDIX E -	ANALYTICAL METHODS	E-1
APPENDIX F -	FIELD/ANALYTICAL DATA	F-1
APPENDIX G -	MASS/ENERGY BALANCES	G-1
APPENDIX H -	SUPPLEMENTAL DATA	H-1
APPENDIX I -	STATISTICAL ANALYTICAL APPROACH	I-1

APPENDIX A

ORGANIC WASTE CHARACTERISTICS OF SITE SOILS AT LEAD (DETERMINED DURING PRELIMINARY INVESTIGATIONS)

TABLE A-1. CONCENTRATION RANGE OF ORGANIC COMPOUNDS DETERMINED TO BE PRESENT AT THE EAST PATROL ROAD DISPOSAL AREA*

Compound	Concentration (ug/L)						
	Area A	Area B	Area E	Area K-1	Area K-2	Area K-3	Area K-4
1. Volatiles on Hazardous Substance List (HSL)							
Acetone							
Benzene		0.1-4		0.1-0.7	0.2-0.7		0-0.1
Bromomethane							
Bromoform							
2-Butanone							
Carbon Disulfide							
Carbon Tetrachloride							
Chlorobenzene	0-20			0-0.6			
Chlorodibromomethane							
Chloroethane							
2-Chloroethylvinyl Ether							
Chloroform				0-0.2	0.4-0.7		
Chloromethane							
Dichlorobromomethane							
1,1-Dichloroethane							
1,2-Dichloroethane							
1,1-Dichloroethylene				0-3		10-20	
1,2-Dichloropropane							
1,3-Trans Dichloropropene				0-10			
1,3-Cis Dichloropropene							
Ethylbenzene	200-1000	2-8		9-10	0-20		
2-Hexanone							
Methylene Chloride	0.6-7			0.8-10	0.7-4		
4-Methyl-2-Pentanone							
Styrene							
1,1,2,2-Tetrachloroethane				0.2-800	0-0.2	0-1	0-1
Tetrachloroethylene							
Toluene	1-40	0-2		1-100	0.9-7		
1,2-cis/trans Dichloroethylene	0-200	0-1		50-2000			
1,1,2-Trichloroethane							
1,1,1-Trichloroethane	0-0.9					0-0.4	
Trichloroethylene	0-0.8			3-500		0.8-40	0-2

*Source: Letterkenny Army Depot Remedial Investigation and Feasibility Study, WESTON Report No. DRXTH-AS-CR-83247, February 1984.

TABLE A-1. (CONTINUED)

Compound	Concentration (ug/L) Area A	Area B	Area E	Area K-1	Area K-2	Area K-3	Area K-4
1. Volatiles on Hazardous Substance List (HSL) (continued)							
Vinyl Acetate							
Vinyl Chloride	0-30			5-200			
Xylene	0-7000	3-100		1-700	0-40		
Total Volatiles	201.6-8298.7	5.1-115		70.1-4334.5	2.2-72.6	10.8-61.4	0-3.1
2. Others							
Ethyl Methyl Benzene		0-10		0-3			
Methyl Cyclohexane	0-7						
Trichlorofluoromethane	0-0.5						
Trimethyl Benzene		1-7		2-30			
Trimethyl Pentane	0-20						
Various Hydrocarbon	2-100	4-7000		2-400	0-8		
Total Others	2-127.5	5-7017		4-433	0-8		
TOTAL	203.6-8426.2	10.1-7132		74.1-4767.5	2.2-80.6	10.8-61.4	0-3.1

TABLE A-2. VOLATILE ORGANIC COMPOUNDS (VOC'S) INCLUDED ON THE HAZARDOUS SUBSTANCE LIST (HSL)

Volatile organic compounds	Detection limits* Low water[a] ug/L	Low soil/ sediment[b] ug/Kg
1. Chloromethane	10	10
2. Bromomethane	10	10
3. Vinyl Chloride	10	10
4. Chloroethane	10	10
5. Methylene Chloride	5	5
6. Acetone	10	10
7. Carbon Disulfide	5	5
8. 1,1-Dichloroethene	5	5
9. 1,1-Dichloroethane	5	5
10. Trans-1,2-Dichloroethene	5	5
11. Chloroform	5	5
12. 1,2-Dichloroethane	5	5
13. 2-Butanone	10	10
14. 1,1,1-Trichloroethane	5	5
15. Carbon Tetrachloride	5	5
16. Vinyl Acetate	10	10
17. Bromodichloromethane	5	5
18. 1,1,2,2-Tetrachloroethane	5	5
19. 1,2-Dichloropropane	5	5
20. Trans-1,3-Dichloropropene	5	5
21. Trichloroethene	5	5
22. Dibromochloromethane	5	5
23. 1,1,2-Trichloroethane	5	5
24. Benzene	5	5
25. Cis-1,3-Dichloropropene	5	5

[a]Medium Water Contract Required Detection Limits (CRDL) for Volatile HSL Compounds are 100 times the individual Low Water CRDL.

[b]Medium Soil/Sediment Contract Required Detection Limits (CRDL) for Volatile HSL Compounds are 100 times the individual Low Soil/Sediment CRDL.

*Detection limits listed for soil/sediment are based on wet weight.

TABLE A-2. (CONTINUED)

Volatile organic compounds	Detection limits* Low water[a] ug/L	Low soil/ sediment[b] ug/Kg
26. 2-Chloroethyl Vinyl Ether	10	10
27. Bromoform	5	5
28. 2-Hexanone	10	10
29. 4-Methyl-2-pentanone	10	10
30. Tetrachloroethene	5	5
31. Toluene	5	5
32. Chlorobenzene	5	5
33. Ethyl Benzene	5	5
34. Styrene	5	5
35. Total Xylenes	5	5

[a]Medium Water Contract Required Detection Limits (CRDL) for Volatile HSL Compounds are 100 times the individual Low Water CRDL.
[b]Medium Soil/Sediment Contract Required Detection Limits (CRDL) for Volatile HSL Compounds are 100 times the individual Low Soil/Sediment CRDL.

*Detection limits listed for soil/sediment are based on wet weight.

TABLE A-3. CONCENTRATION RANGE OF VOLATILE ORGANIC COMPOUNDS (VOC'S) DETERMINED TO BE PRESENT IN AREA K-1 (BASED ON TESTING PERFORMED ON 10-12 JUNE 1985)

Compound	Concentration (ug/g)**			
	Borehole 1	Borehole 2	Borehole 3	Borehole 4
1. Volatiles on Hazardous Substance List (HSL)				
Acetone				
Benzene				
Bromomethane				
Bromoform				
2-Butanone				
Carbon Disulfide				
Carbon Tetrachloride				
Chlorobenzene	0.33-240			
Chlorodibromomethane				
Chloroethane				
2-Chloroethylvinyl Ether				
Chloroform				
Chloromethane				
Dichlorobromomethane				
1,1-Dichloroethane				
1,2-Dichloroethane				
1,1-Dichloroethylene				
1,2-Dichloropropane				
1,3-Trans Dichloropropene				
1,3-Cis Dichloropropene				
Ethylbenzene	3.5-4.8	0-3.7	0.73-5.9	0-0.002
2-Hexanone				
Methylene Chloride	0-4.3			
4-Methyl-2-Pentanone				
Styrene				
1,1,2,2-Tetrachloroethane				
Tetrachloroethylene	0.39-28	0.012-0.6	0.008-29	0-0.047
Toluene	0-16			0-0.002
1,2-cis/trans Dichloroethylene	5.8->1300	0.03-76	13-390	0.07-4.8

*For reference, the locations of soil borings drilled in Area K-1 during the waste characterization phase of the pilot study are shown in Figure A-1.

**Concentration ranges correspond to the minimum and maximum concentrations observed in all discreet samples (i.e., 1.5'-3.5', 3.5'-5.0', 5.0'-6.5', 6.5'-8.0', 8.0'-10.0')

TABLE A-3. (CONTINUED)

Compound	Concentration (ug/g)** Borehole 1	Borehole 2	Borehole 3	Borehole 4
11. Volatiles on Hazardous Substance List (HSL) (continued)				
1,1,2-Trichloroethane				
1,1,1-Trichloroethane			0-14	
Trichloroethylene	0.84-16	0.03-27	0.078-300	0.02-1.1
Vinyl Acetate				
Vinyl Chloride	0-2.1		0-2.6	
Xylene	25-32	0.006-25	4-31	0-0.006
Total Volatiles	35.86-1643.2	0.078-132.3	17.816 772.5	0.09-5.957
2. Others				
Cio-Allyl Benzene	20-30			
Dichlorobenzene	3-600	0.03-10	0.009-100	0-0.07
Methyl Ethyl Benzene	0.07-30	0-10	2.3-9	
n-Propylbenzene	4-7	0-3	0-2.9	
Trimethyl Benzene	30-110	0.13-60	8.4-37	
Total Others	57.07-777	0.16-83	10.709-148.9	0-0.07
TOTAL	92.93-2420.2	0.238-215.3	28.525-921.4	0.09-6.027

*For reference, the locations of soil borings drilled in Area K-1 during the waste characterization phase of the pilot study are shown in Figure A-1.

**Concentration ranges correspond to the minimum and maximum concentrations observed for all discreet samples (i.e., 1.5'-3.5', 3.5'-5.0', 5.0'-6.5', 6.5'-8.0', 8.0'-10.0').

TABLE A-3. (CONTINUED)

Compound	Concentration (ug/g)** Borehole 5	Borehole 6	Borehole 7	Borehol 8
1. Volatiles on Hazardous Substance List (HSL)				
Acetone				
Benzene		0-0.28		
Bromomethane				
Bromoform				
2-Butanone				
Carbon Disulfide				
Carbon Tetrachloride				
Chlorobenzene		0-0.44		
Chlorodibromomethane				
Chloroethane				
2-Chloroethylvinyl Ether				
Chloroform				
Chloromethane				
Dichlorobromomethane				
1,1-Dichloroethane		0-0.26		
1,2-Dichloroethane				
1,1-Dichloroethylene		0.3-2.7		0-1.8
1,2-Dichloropropane				
1,3-Trans Dichloropropene				
1,3-Cis Dichloropropene				
Ethylbenzene		0.97-4.3	0-4.9	0.15-11
2-Hexanone				
Methylene Chloride	0-1.7	0-0.6		
4-Methyl-2-Pentanone				
Styrene				
1,1,2,2-Tetrachloroethane		0.07-0.76		
Tetrachloroethylene	0.012-0.064	0.009-4.2	210->3800	0.058-17
Toluene		4.9-8.2		
1,2-cis/trans Dichloroethylene	0.46-5.2	0.098-990	10-130	0.9-920

*For reference, the locations of soil borings drilled in Area K-1 during the waste characterization phase of the pilot study are shown in Figure A-1.

**Concentration ranges correspond to the minimum and maximum concentrations observed i all discreet samples (i.e., 1.5'-3.5', 3.5'-5.0', 5.0'-6.5', 6.5'-8.0', 8.0'-10.0')

TABLE A-3. (CONTINUED)

Compound	Concentration (ug/g)** Borehole 5	Borehole 6	Borehole 7	Borehole 8
1. Volatiles on Hazardous Substance List (HSL) (continued)				
1,1,2-Trichloroethane				
1,1,1-Trichloroethane			34-48	
Trichloroethylene	0.047-1.2	0.056-330	25->3500	1.2-3000
Vinyl Acetate				
Vinyl Chloride		0-4.3		4.4-4.8
Xylene		0.049-25	5.1-24	0.82-47
Total Volatiles	0.519-8.164	6.452 1371.04	284.1- 7506.9	7.528 4001.6
2. Others				
Cio-Allyl Benzene		2-20		0-5
Dichlorobenzene	0-0.4	7-200	0.9-2.4	0.5-20
Methyl Ethyl Benzene		0.5-24	0-10	0.4-11
n-Propylbenzene		0.72-5.6		0-4
Trimethyl Benzene		3.7-66	0-43	2.5-50
Total Others	0-0.4	13.92- 315.6	0.9-55.4	3.4-90
TOTAL	0.519-8.564	20.372 1686.64	285- 7562.3	10.928 4091.6

*For reference, the locations of soil borings drilled in Area K-1 during the waste characterization phase of the pilot study are shown in Figure A-1.

**Concentration ranges correspond to the minimum and maximum concentrations observed for all discreet samples (i.e., 1.5'-3.5', 3.5'-5.0', 5.0'-6.5', 6.5'-8.0', 8.0'-10.0').

TABLE A-3. (CONTINUED)

Compound	Concentration (ug/g)** Borehole 9	Borehole 10	Borehole 11
1. Volatiles on Hazardous Substance List (HSL)			
Acetone			
Benzene			
Bromomethane			
Bromoform			
2-Butanone			
Carbon Disulfide			
Carbon Tetrachloride			
Chlorobenzene			
Chlorodibromethane			
Chloroethane			
2-Chloroethylvinyl Ether			
Chloroform			
Chloromethane		0-0.1	
Dichlorobromomethane			
1,1-Dichloroethane			
1,2-Dichloroethane			
1,1-Dichloroethylene	0-0.01		
1,2-Dichloropropane			
1,3-Trans Dichloropropene			
1,3-Cis Dichloropropene			
Ethylbenzene			
2-Hexanone			
Methylene Chloride			
4-Methyl-2-Pentanone			
Styrene			
1,1,2,2-Tetrachloroethane			
Tetrachloroethylene	0.006-170	0.016-0.83	0-0.007
Toluene			0-0.006
1,2-cis/trans Dichloroethylene	4.5-74	0.05-0.08	0.007-0.023

*For reference, the locations of soil borings drilled in Area K-1 during the waste characterization phase of the pilot study are shown in Figure A-1.

**Concentration ranges correspond to the minimum and maximum concentrations observed for all discreet samples (i.e., 1.5'-3.5', 3.5'-5.0', 5.0'-6.5', 6.5'-8.0', 8.0'-10.0').

TABLE A-3. (CONTINUED)

Compound	Concentration (ug/g)** Borehole 9	Borehole 10	Borehole 11
1. Volatiles on Hazardous Substance List (HSL) (continued)			
1,1,2-Trichloroethane			
1,1,1-Trichloroethane	0-30		
Trichloroethylene	0.14-1700	0.01-2.5	0.012-0.037
Vinyl Acetate			
Vinyl Chloride		0.05-0.24	
Xylene	8-11	0.012-0.06	
Total Volatiles	12.645 1985.01	0.138-3.81	0.019-0.073
2. Others			
Cio-Allyl Benzene		0-0.08	
Dichlorobenzene	2-11	0.02-0.1	
Methyl Ethyl Benzene	0-4	0.02-0.13	
n-Propylbenzene		0-0.02	
Trimethyl Benzene	0-20	0.13-0.44	
Total Others	2-35	0.17-0.77	
TOTAL	14.645 2020.01	0.308-4.58	0.019-0.073

*For reference, the locations of soil borings drilled in Area K-1 during the waste characterization phase of the pilot study are shown in Figure A-1.

**Concentration ranges correspond to the minimum and maximum concentrations observed for all discreet samples (i.e., 1.5'-3.5', 3.5'-5.0', 5.0'-6.5', 6.5'-8.0', 8.0'-10.0').

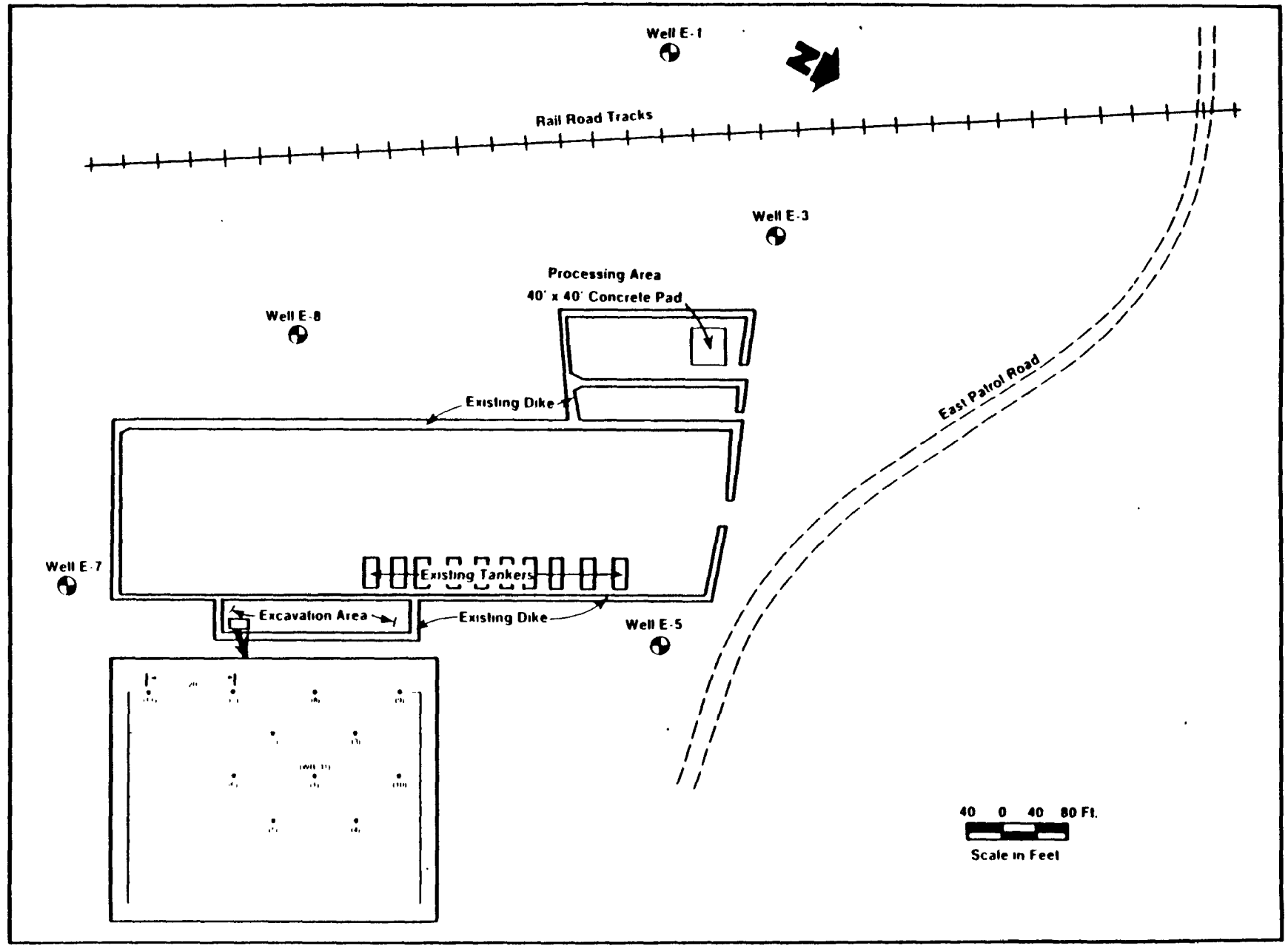

FIGURE A-1 LOCATION OF SOIL BORINGS DRILLED IN AREA K-1 DURING THE WASTE CHARACTERIZATION PHASE OF THE PILOT STUDY

APPENDIX B

GRAIN SIZE GRADATION CURVES CORRESPONDING TO FILL SOIL AND NATIVE SOIL

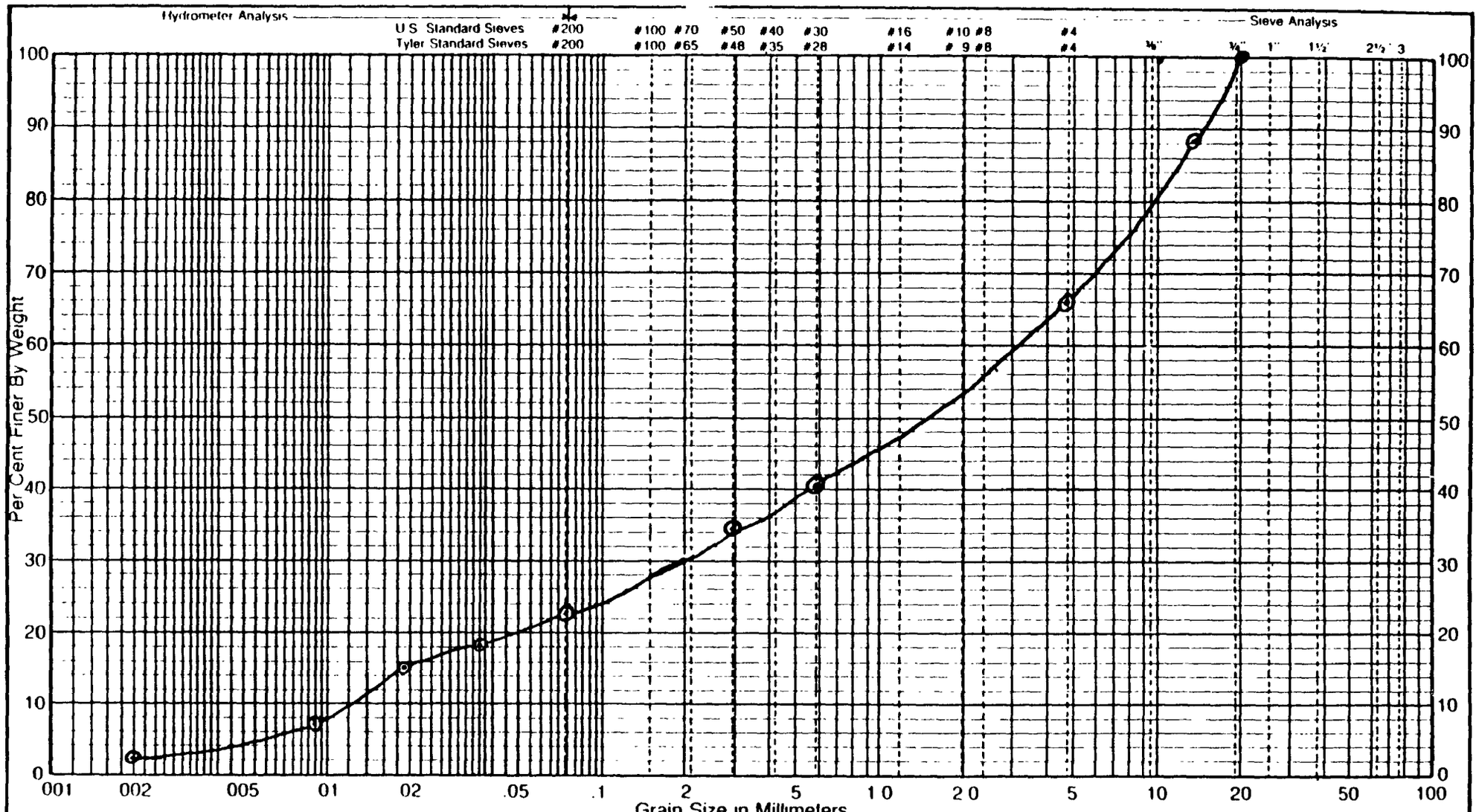

United Soils Classification	Clay or Silt	Sand			Gravel		Cobbles
		Fine	Medium	Coarse	Fine	Coarse	

Symbol	Sample	D60	Specific Gravity	Description of Sample
				FILL - GRAVELLY SAND

WESTON

Gradation Curves

B-1

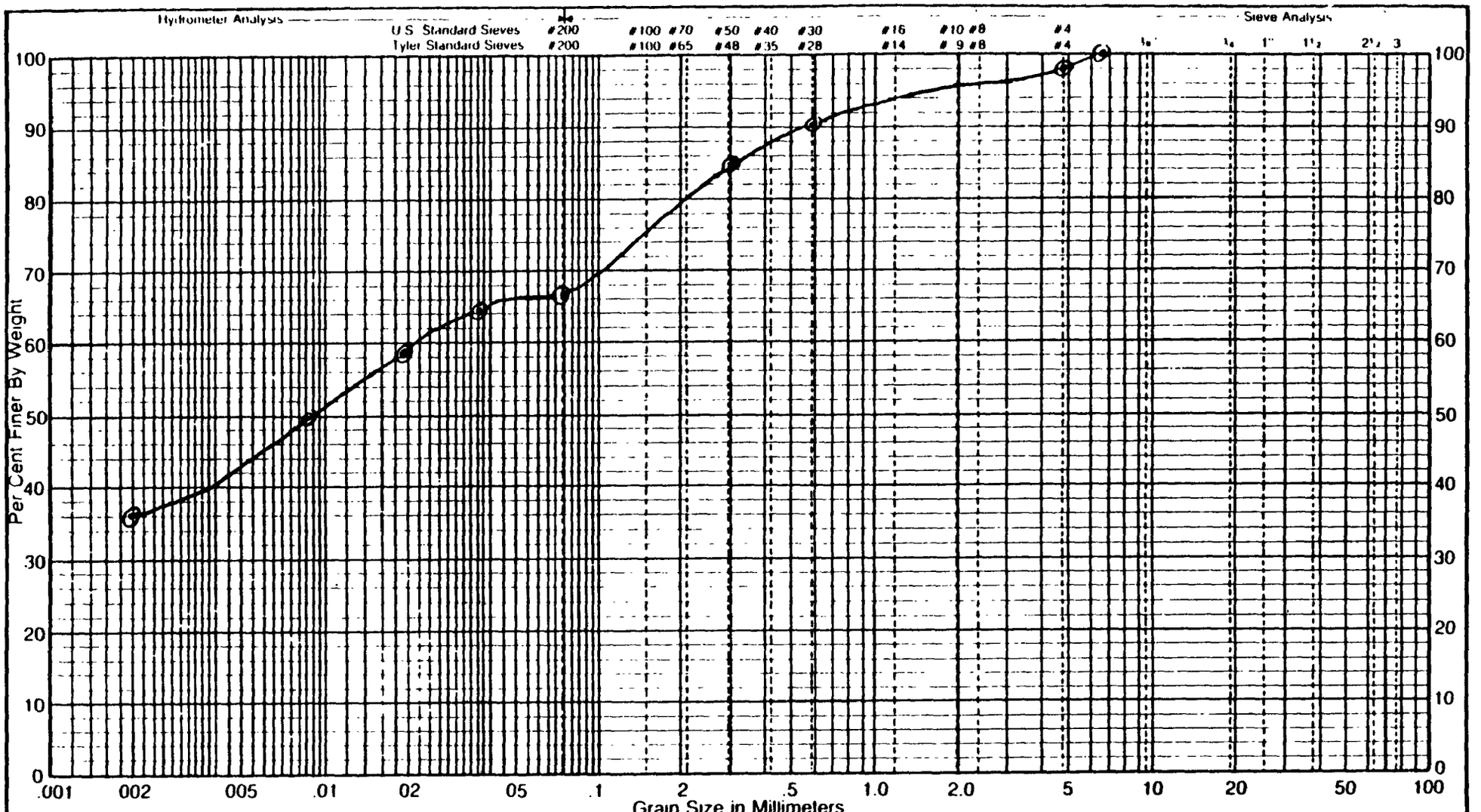

United Soils Classification	Clay or Silt	Sand			Gravel		Cobbles
		Fine	Medium	Coarse	Fine	Coarse	

Symbol	Sample	D60	Specific Gravity	Description of Sample
				Native Soil - Sandy CLAY/Sandy SILT

WESTON

Gradation Curves

B-2

APPENDIX C

AIR SAMPLING TECHNIQUES

C. AIR SAMPLING TECHNIQUES

C.1 Description of test locations. An instrumentation diagram showing the location of measuring devices is included in Figure C-1. A brief description of each location is discussed in the following subsections.

C.1.1 Process air inlet. A single 2-inch inner diameter (ID) test port was installed in a horizontal straight section of pipe downstream from the air preheater outlet, i.e., 32 inches (8 diameters) downstream of a pipe bend and 25 inches (greater than 2 diameters) upstream of the thermal processor air inlet (Figure C-2). Traverse point selection criteria dictated by EPA Method 1[1] for this "ideal" test location required a minimum of 8 points, 4 per port axis. For this duct configuration, only one port axis was traversed to obtain preliminary velocity profiles. During formal testing, flow rates were measured from a center point location. Figure C-1 illustrates test port placement and sampling point locations.

C.1.2 Process off-gas manifolds. A single 2-inch ID test port was installed on each of the three identical and parallel air lines discharging gases from the thermal processor. Each test port was located in a 3-inch ID horizontal straight section >8 diameters downstream of the processor dome and >2 diameters upstream of a 4-inch ID header that combined the three off-gas manifolds. Traverse point selection criteria dictated by EPA Method 1 for this "ideal" location required a minimum of 8 points, 4 per port axis. For this duct configuration, only one port axis was traversed to obtain preliminary velocity profiles. During formal testing, flow rates were measured from a center point location. Figure C-3 illustrates test port placement and sampling point locations.

C.1.3 Afterburner inlet. A single 2-inch ID test port was installed in a 4-inch horizontal straight section of pipe downstream of the off-gas manifold main header >8 diameters downstream of a pipe bend and >2 diameters upstream of the induced draft fan. Traverse point selection criteria dictated by EPA Method 1 for this "ideal" location required a minimum of 8 points, 4 per port axis. For this duct configuration, only one port axis was traversed to obtain preliminary velocity profiles. During formal testing, flow rates were measured at center point locations. Figure C-4 illustrates test port placement and sampling point locations.

[1] Code of Federal Regulations, Title 40, Part 60, Appendix A, "Standards of Performance for New Stationary Sources," 18 August 1977.

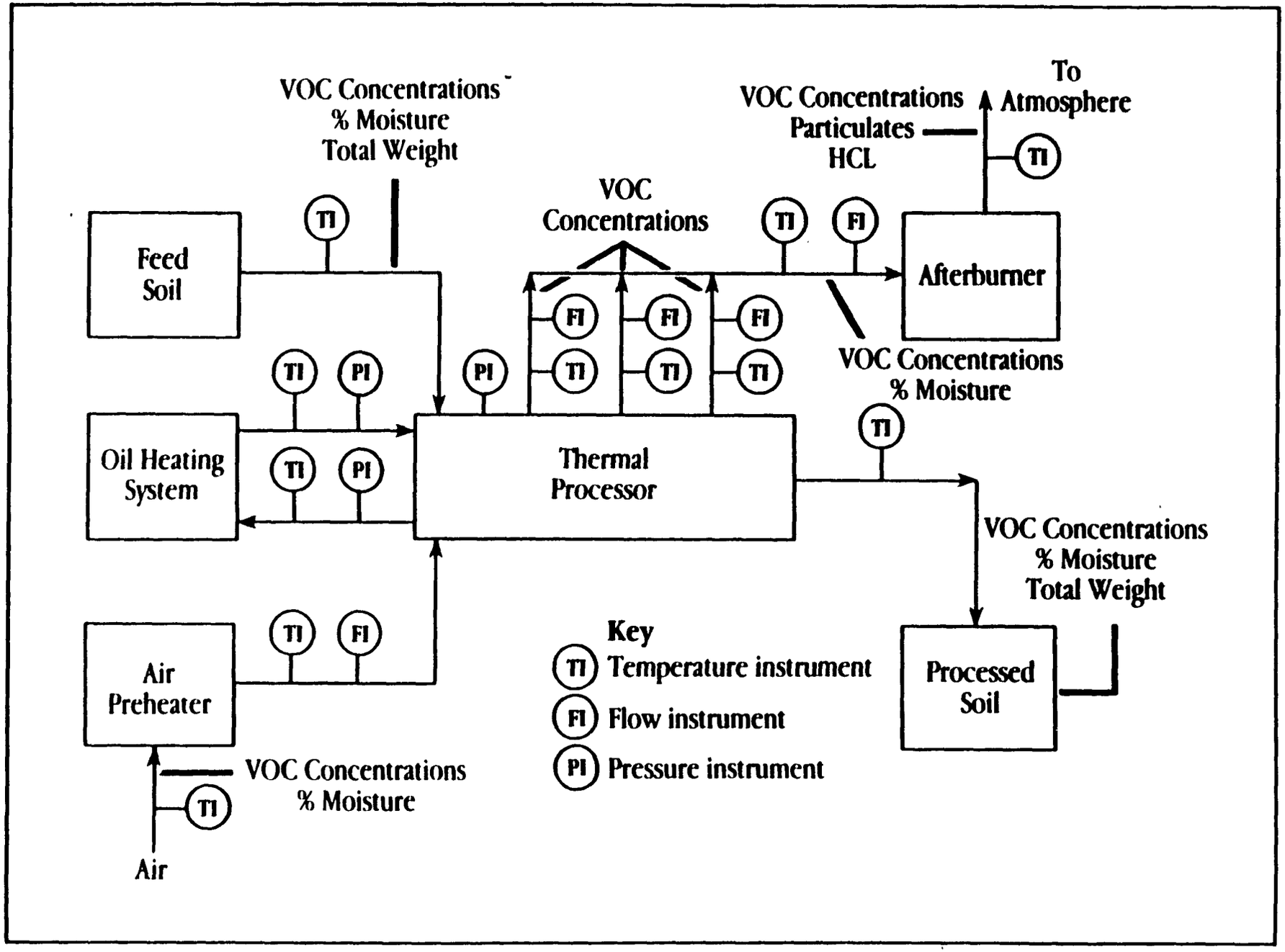

FIGURE C-1 THERMAL PROCESSING SYSTEM INSTRUMENTATION AND SAMPLI 'ANALYSIS DIAGRAM

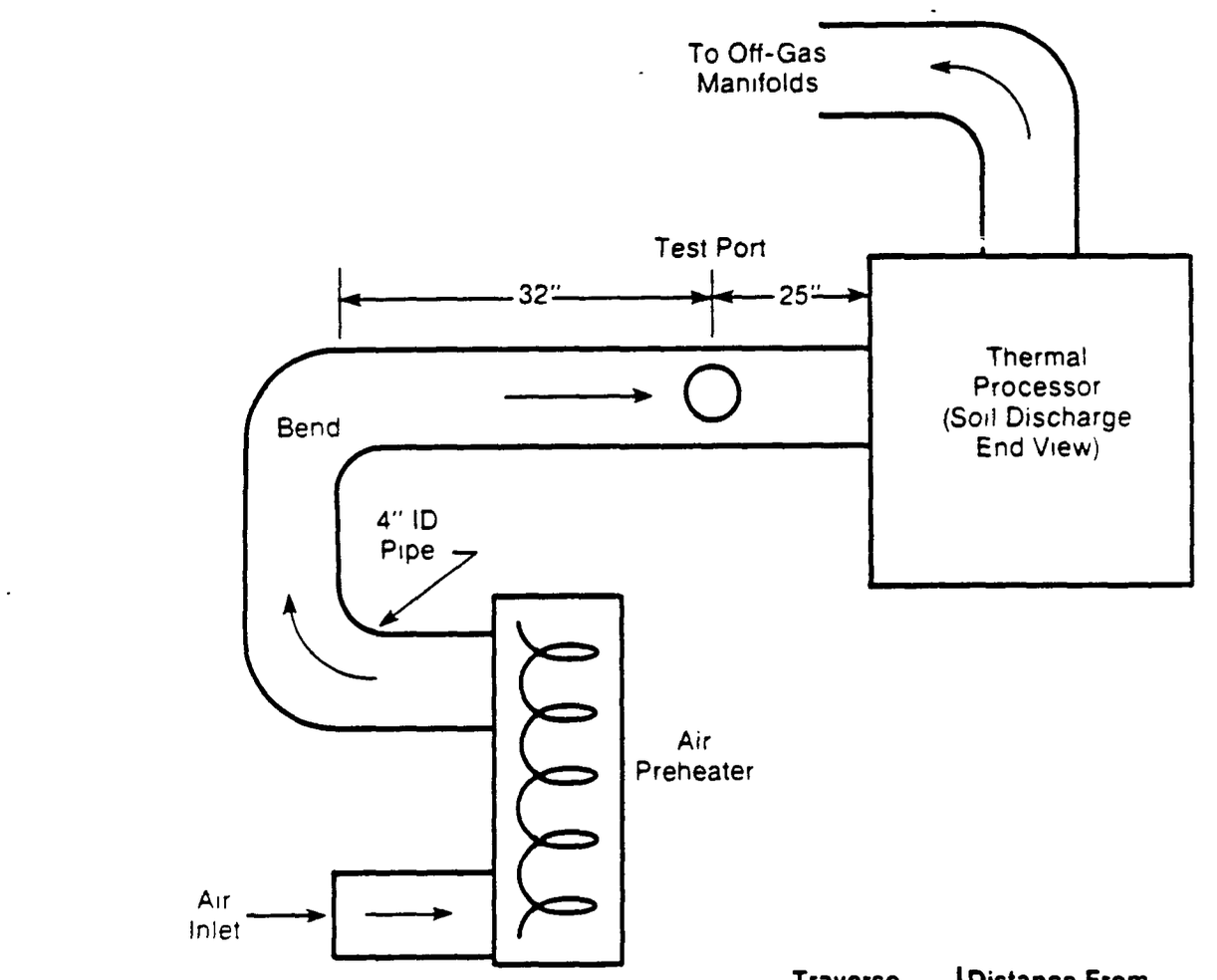

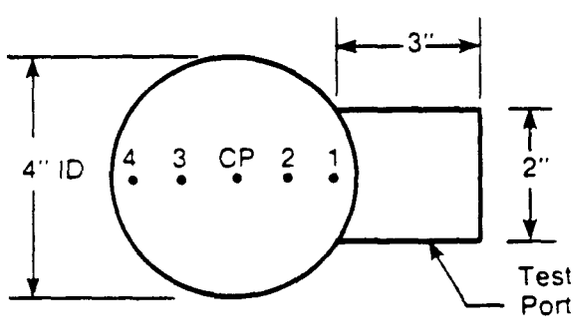

Test Port Cross-Sectional View

Traverse Point Number	Distance From Inside Near Wall, Inches
1	¼
2	1
Center Point (CP)	2
3	3
4	3¾

FIGURE C-2 PROCESS AIR INLET PORT AND TRAVERSE POINT LOCATIONS

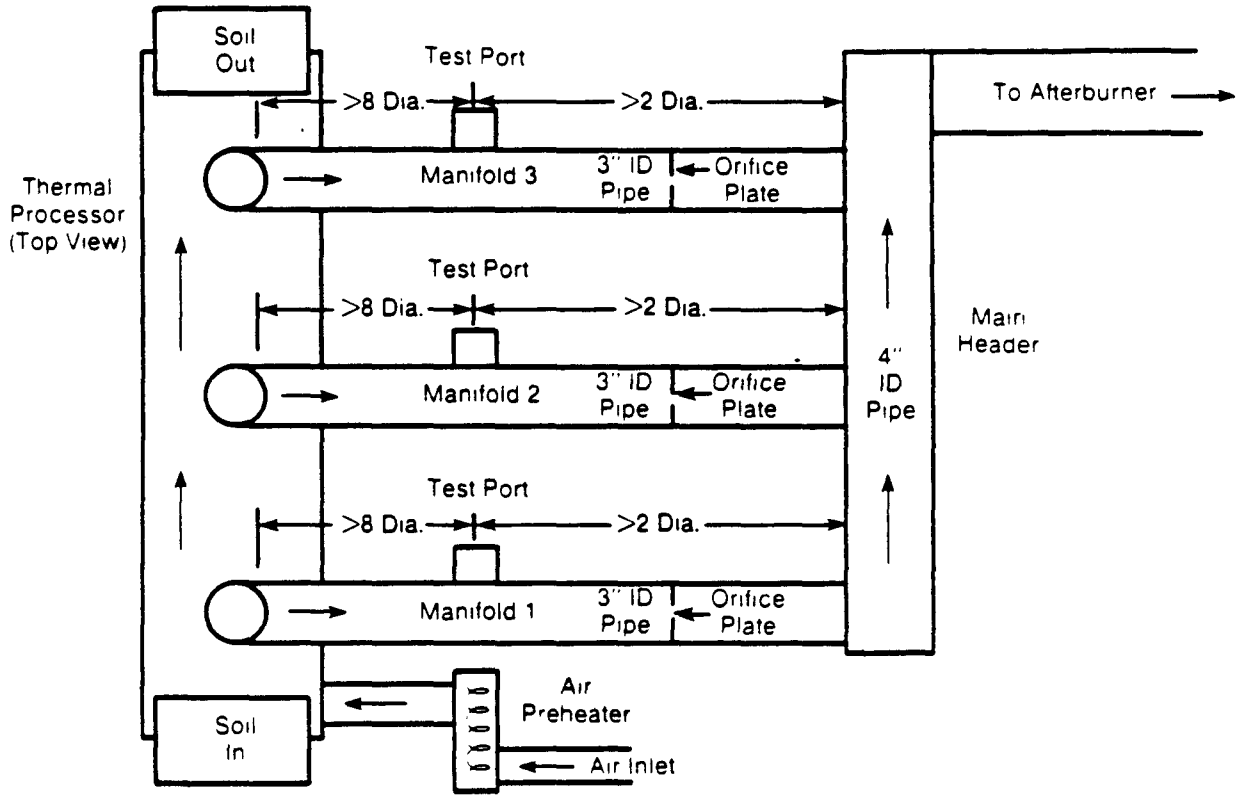

Traverse Point Number	Distance From Inside Near Wall, Inches
1	½
2	¾
Center Point (CP)	1½
3	2¼
4	2¾

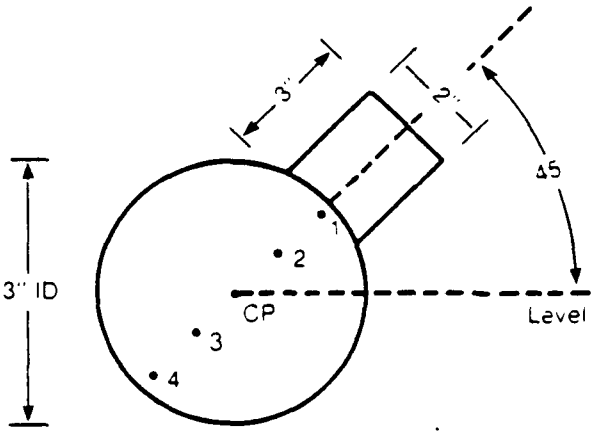

Test Port Cross-Sectional View

FIGURE C-3 PROCESS OFF-GAS MANIFOLDS PORT AND TRAVERSE POINT LOCATIONS

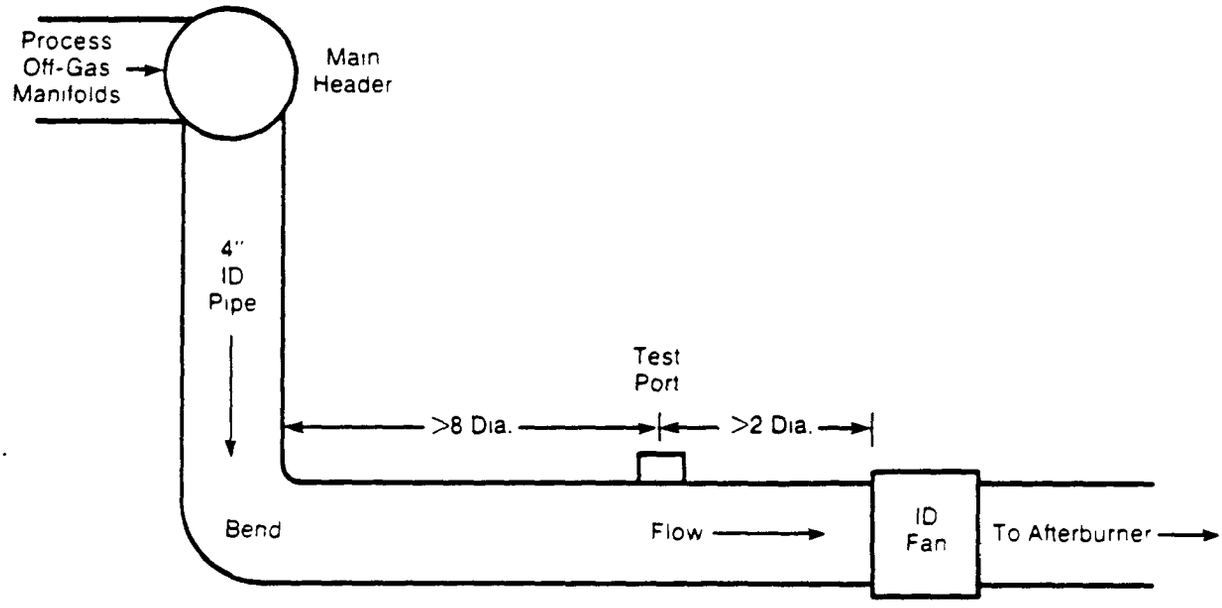

Traverse Point Number	Distance From Inside Near Wall, Inches
1	¼
2	1
Center Point (CP)	2
3	3
4	3¾

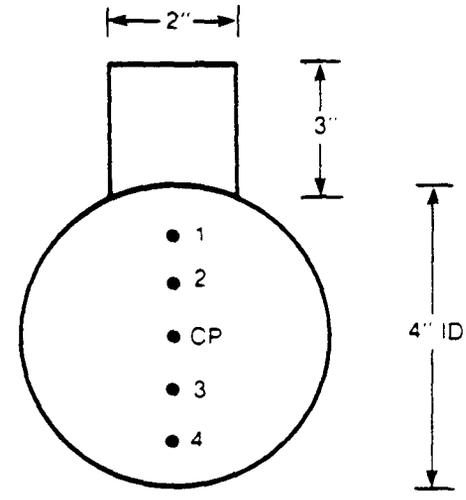

Test Port Cross-Sectional View

FIGURE C-4 AFTERBURNER INLET PORT AND TRAVERSE POINT LOCATION

C.1.4 Discharge stack. Two test ports were installed 90° apart in a straight section of the vertical stack 102 inches (>8 diameters) downstream of the afterburner chamber and 72 inches (>2 diameters) upstream of the stack outlet. Five inches of refactory brick lined the inside of the 9.625-inch ID stack. Traverse point selection criteria dictated by EPA Method 1 for this "ideal" test location required a minimum of 8 points, 4 per port axis. Figure C-5 illustrates test port placement and sample point locations.

C.2 Description of test equipment.

C.2.1 Flow. Air flow at the processor inlet and afterburner inlet was measured using 12-inch standard pitot tubes connected to inclined manometers (velocity pressure indicators). Air flow in the process off-gas manifolds was measured by orifice plates. Magnahelics monitored the orifice plate pressure differentials. Flow at the discharge stack was determined using S-type pitot tubes incorporated with a modified EPA Method 5 train (described in Section C.2.4.2).

C.2.2 Temperature was monitored using chromel/alumel thermocouples placed alongside the pitot tubes or orifice plates and wired to a switchable calibrated digital pyrometer.

C.2.3 Moisture. The moisture contents of the process inlet air and infiltration air were assumed to be the same as ambient air and were measured using a sling psychrometer and associated psychrometric chart.

The moisture content at the afterburner inlet was measured by an EPA Method 4 sampling train. Moisture was determined at the discharge stack using a modified EPA Method 5 train described in subsection C.2.4.2.

C.2.4 VOC's.

C.2.4.1 Total VOC's by continuous emissions monitoring (CEM) system. The CEM system was used to measure total VOC concentrations at the process off-gas manifolds for Test Runs 1 through 18, at the afterburner inlet for Test Runs 19 through 23, and at manifold 2 for Test Runs 25 through 28. This system measured gross VOC concentrations in the linear range from 1 to 600 ppm by volume dry air relative to the calibration gas (benzene). The CEM system (see Figure C-6) consisted of the following components connected in series:

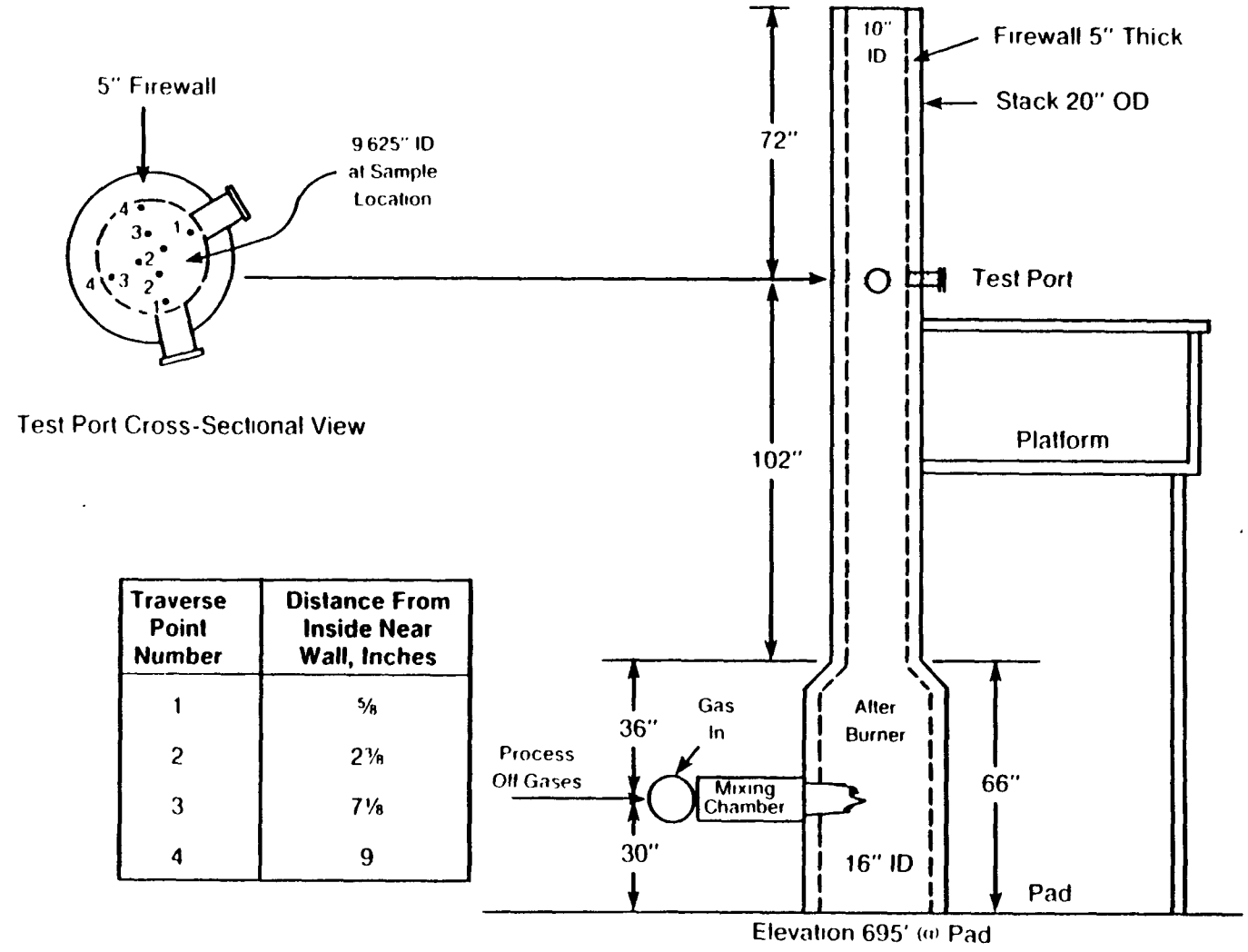

Traverse Point Number	Distance From Inside Near Wall, Inches
1	5/8
2	2 1/8
3	7 1/8
4	9

FIGURE C-5 DISCHARGE STACK TEST PORT AND TRAVERSE POINT LOCATIONS

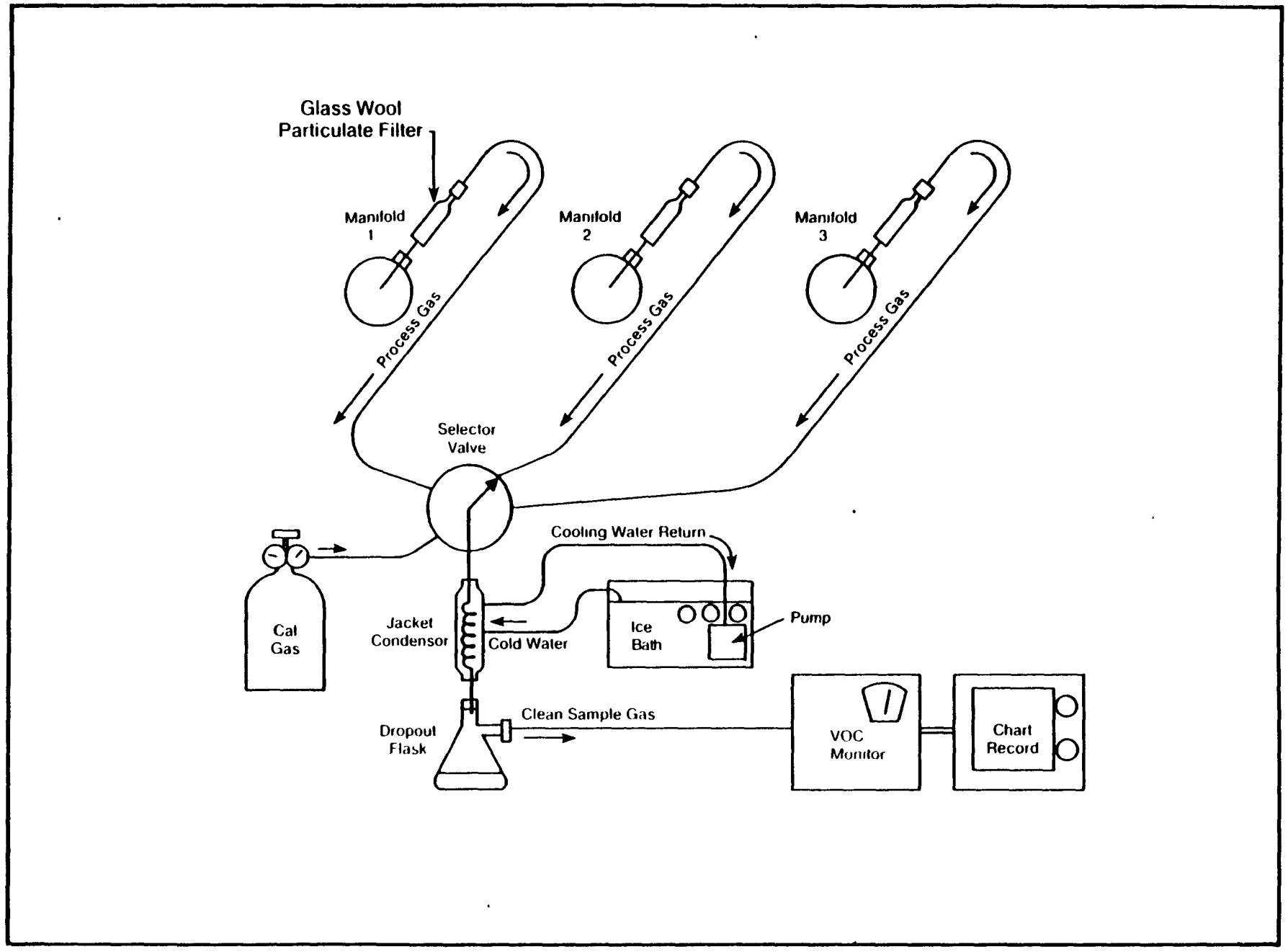

FIGURE C-6 CONTINUOUS EMISSIONS MONITORING SYSTEM

(a) A glass wool thimble (to remove particulate) connected to 8 feet of 1/4-inch heated (approximately 170°F) teflon tubing (to transport sample gas).
(b) A stainless steel four-way switch valve that connected sample gas lines (manifolds 1, 2, and 3 or afterburner inlet) and calibration gas to a common 1/4-inch teflon tube (to select individual gas source).
(c) From the common line, an ice water-cooled glass condenser and condensate trap (to cool and dry the sample gas).
(d) An AID Model 590 volatile organics monitor/GC (photoionization detector with 10.0 eV lamp) for Test Runs 1 through 11.
(e) A century model 128 volatile organics monitor/GC (flame ionization detector) for Test Runs 12 through 23 and 24 through 28.
(f) Monitor output recorded on Molytek single channel recorder.

Both monitors were used in the total VOC survey mode and were calibrated on benzene (or styrene referenced to benzene) standards in air.

C.2.4.2 Specific VOC's by Modified Volatile Organic Sampling Train (MOD VOST). Specific VOC concentrations were measured at the afterburner inlet for Test Runs 1 through 18 and at the process off-gas manifolds for Test Runs 19 through 23, using a MOD VOST. This sampling train was applicable to the higher VOC concentrations (i.e., greater than 500 ppm/volume) encountered at these test locations. The sampling train (see Figure C-7) consisted of the following components connected in series:

(a) A glass wool thimble (to remove particulate) connected to 8 feet of 1/4-inch heated (approximately 170°F) teflon tubing (to transport sample gas).
(b) An ice water-cooled glass condensor and condensate trap (to collect VOC condensable at 68°F).
(c) A section of 1/4-inch teflon tubing connecting the condensate trap to a 2-section, 8-gram and 4-gram activated charcoal tube (to adsorb VOC's) and a silica gel tube (to remove residual moisture before entering the pump).
(d) The silica gel tube was connected via an umbilical cable to a control console containing flow controllers, a calibrated 1 liter per minute (lpm) dry gas meter, a sample pump, valves and vacuum gauges, a water coolant pump, and temperature indicators.

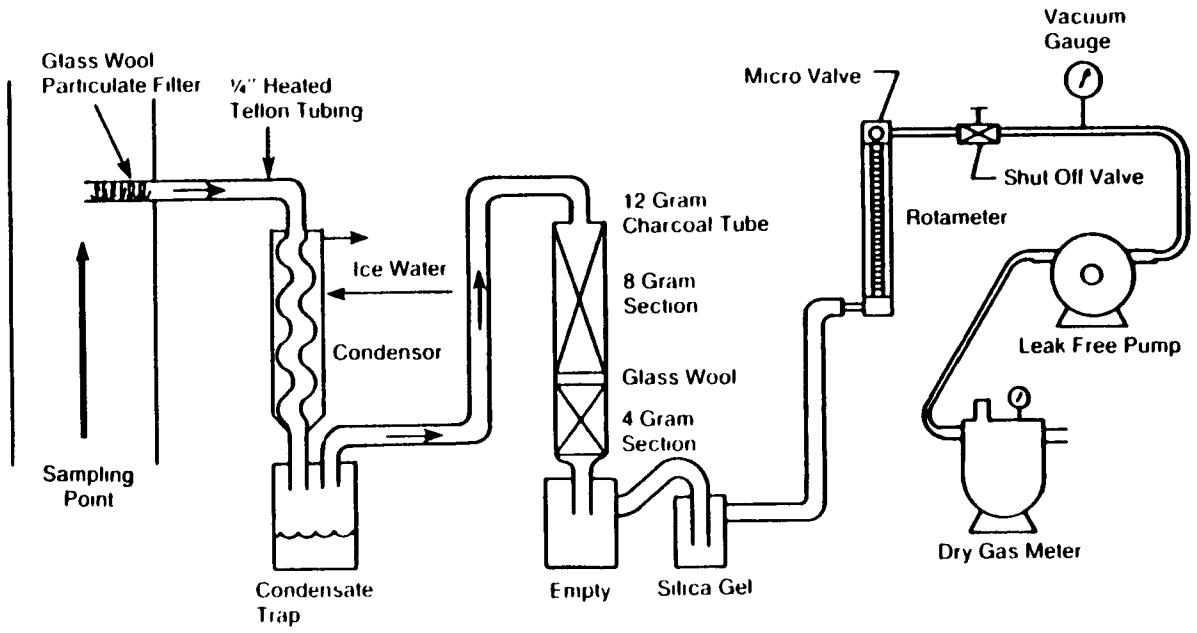

FIGURE C-7 MODIFIED VOLATILE ORGANICS SAMPLING TRAIN (MOD VOST)

C.2.4.3 Specific VOC's by VOST. Specific VOC concentrations in the discharge stack gas emission stream were determined using a volatile organics sampling train. This sampling train (see Figure C-8) consisted of the following components connected in series:

(a) A heated borosilicate probe, 3-ft in length, containing a glass wool particulate filter.
(b) The probe was connected to an ice water-cooled condenser followed by an adsorption cartridge containing 1.6 grams of Tenax (35/60 mesh) and a condensate trap.
(c) A section of teflon tubing was used to connect the outlet of the condensate trap to a second condenser which is followed by a back-up sorbent trap (containing 1 gram of Tenax and 1 gram of SKC petroleum-based charcoal), a condensate collector, and a tube containing a measured amount of silica gel.
(d) The tube of silica gel was connected via an umbilical cable to a control console containing flow controllers, a calibrated 1 lpm dry gas meter, a sample pump, a coolant pump, a temperature indicator, and other components.

C.2.5 Particulate and hydrochloric acid sampling equipment. Particulate, hydrochloric acid (HCl), and moisture present in the stack gases were collected simultaneously using a modified EPA Method 5 sampling train (see Figure C-9). This sampling train consisted of the following components:

(a) A 316 stainless steel nozzle with an inside diameter sized to sample isokinetically.
(b) A heated, hastalloy-C probe, approximately 3 ft long, equipped with thermocouple to measure flue gas temperature and an S-type pitot tube to measure flue gas velocity pressure.
(c) A heated oven containing a borosilicate filter holder with a weighed 90-millimeter Reeve Angle 934 AH glass fiber filter.
(d) A section of borosilicate tubing to connect the outlet of the filter hold to the inlet of the impinger train.
(e) An impinger train containing 4 impingers (No. 1 -- 100 ml 0.1 N NaOH; No. 2 -- 100 milliliter 0.1 N NaOH; No. 3 -- dry; No. 4 -- 200 gram silica gel). The first 3 impingers were of the standard Greenburg-Smith design; the final impinger was modified by replacing the impaction tip with straight tubing.

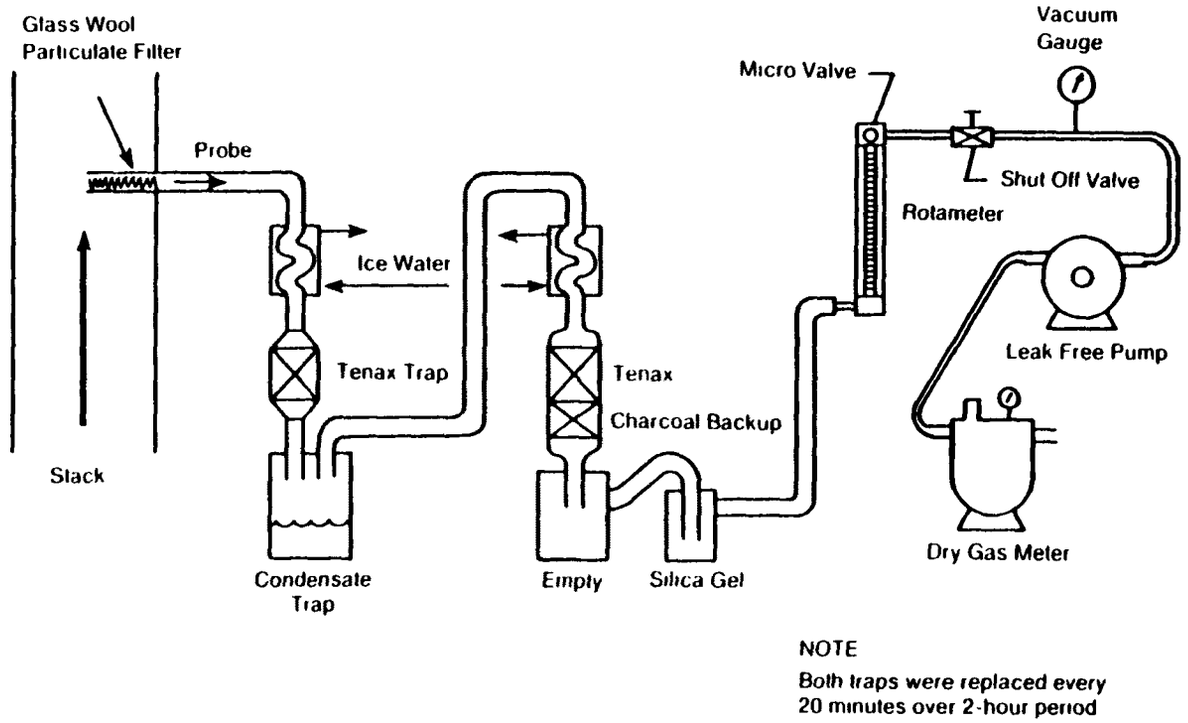

FIGURE C-8 VOLATILE ORGANICS SAMPLING TRAIN (VOST)

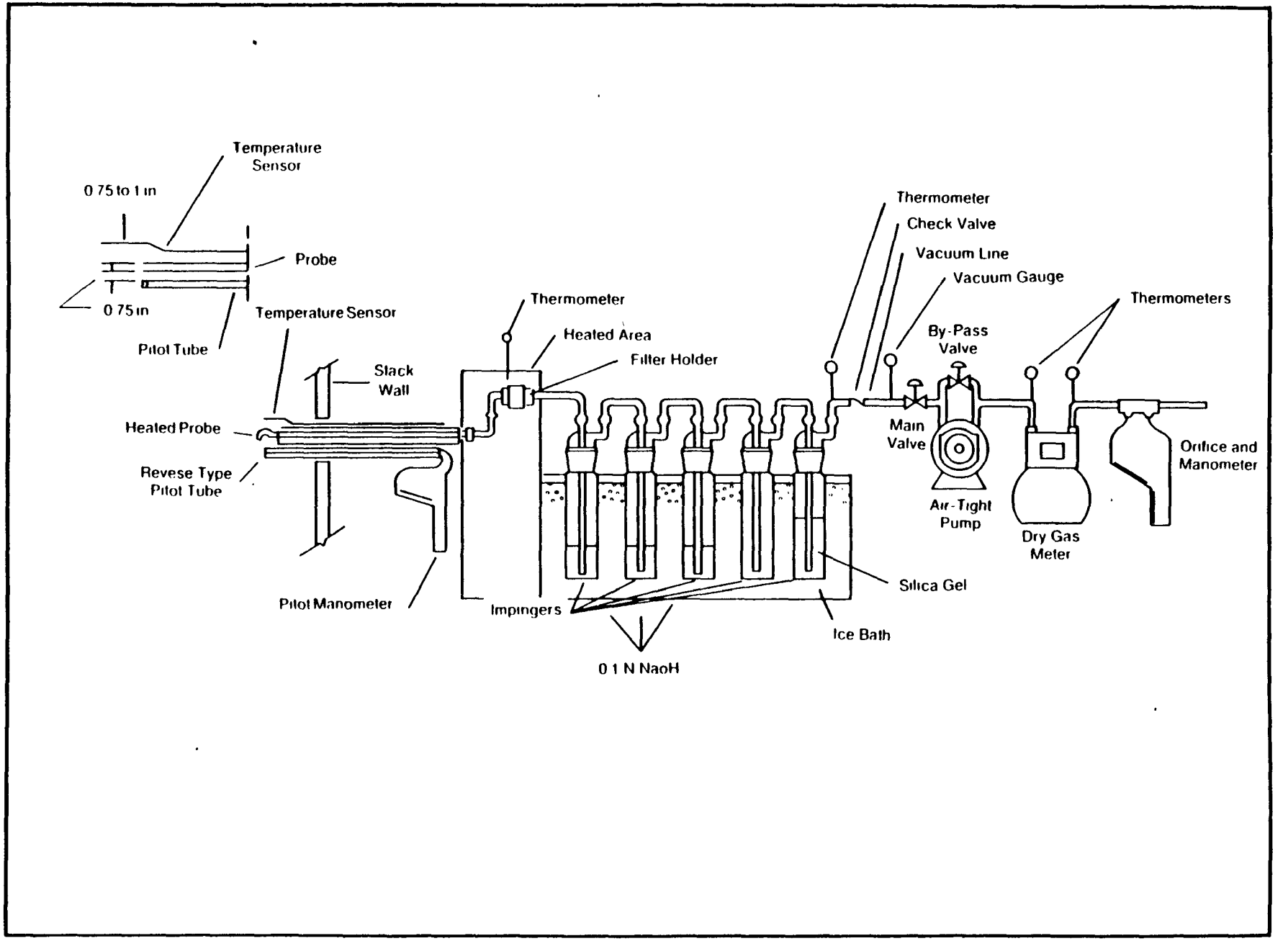

FIGURE C-9 PARTICULATE/HCl SAMPLING TRAIN - MODIFIED EPA METHOD 5

(f) A vacuum hose to connect the outlet of the impinger train to a control module.
(g) A control module containing a 3 cubic foot per minute carbon vane vacuum pump (sample gas mover), a calibrated dry gas meter (sample gas volume measurement device), a calibrated orifice (sample gas flow rate indicator), and inclined manometers (orifice and gas stream pressure indicators).
(h) A switchable calibrated digital pyrometer to monitor flue and sample gas temperatures.

The material collected in the nozzle, probe, front-half of the filter holder, and on the glass fiber filter were analyzed gravimetrically for particulate. The liquid from the NaOH-containing impingers was analyzed for HCl.

C.2.6 Fixed gases (CO_2, O_2, CO) sampling equipment. The fixed gas sampling train (Figure C-10) was assembled in accordance with EPA Method 3 and consisted of the following components:

(a) A stainless steel probe with a plug of glass wool to remove particulate.
(b) An air or water-cooled condenser to remove moisture from the sampled gases.
(c) A diaphragm pump to draw a continuous sample of the gases.
(d) A Tedlar or plastic-coated aluminum barrier bag to contain the sample of flue gases.

An Orsat analyzer was used to analyze the contents of the bag for CO_2, O_2, and CO.

C.3 Testing, monitoring, and analytical procedures. Following equipment set-up, technicians compiled preliminary test data at the process air inlet, process off-gas manifolds, afterburner inlet, and discharge stack. Geometric flue measurements were recorded and pitot tube traverses were performed to determine the presence/absence of cyclonic flow.

Formal tests generally ran two to three hours in duration, depending on process upsets, available quantities of feed soil, and weather conditions. The test period was defined by the VOC sampling time at the afterburner inlet. Simultaneous testing was performed on all source locations (excluding the discharge stack) during the 23 test runs. Concurrent compliance tests were performed at the discharge stack during selected low, medium, and high VOC-inlet loading conditions (Test Runs 8, 9, and 10, respectively). Table C-1 presents the parameters measured at each source location for each test run.

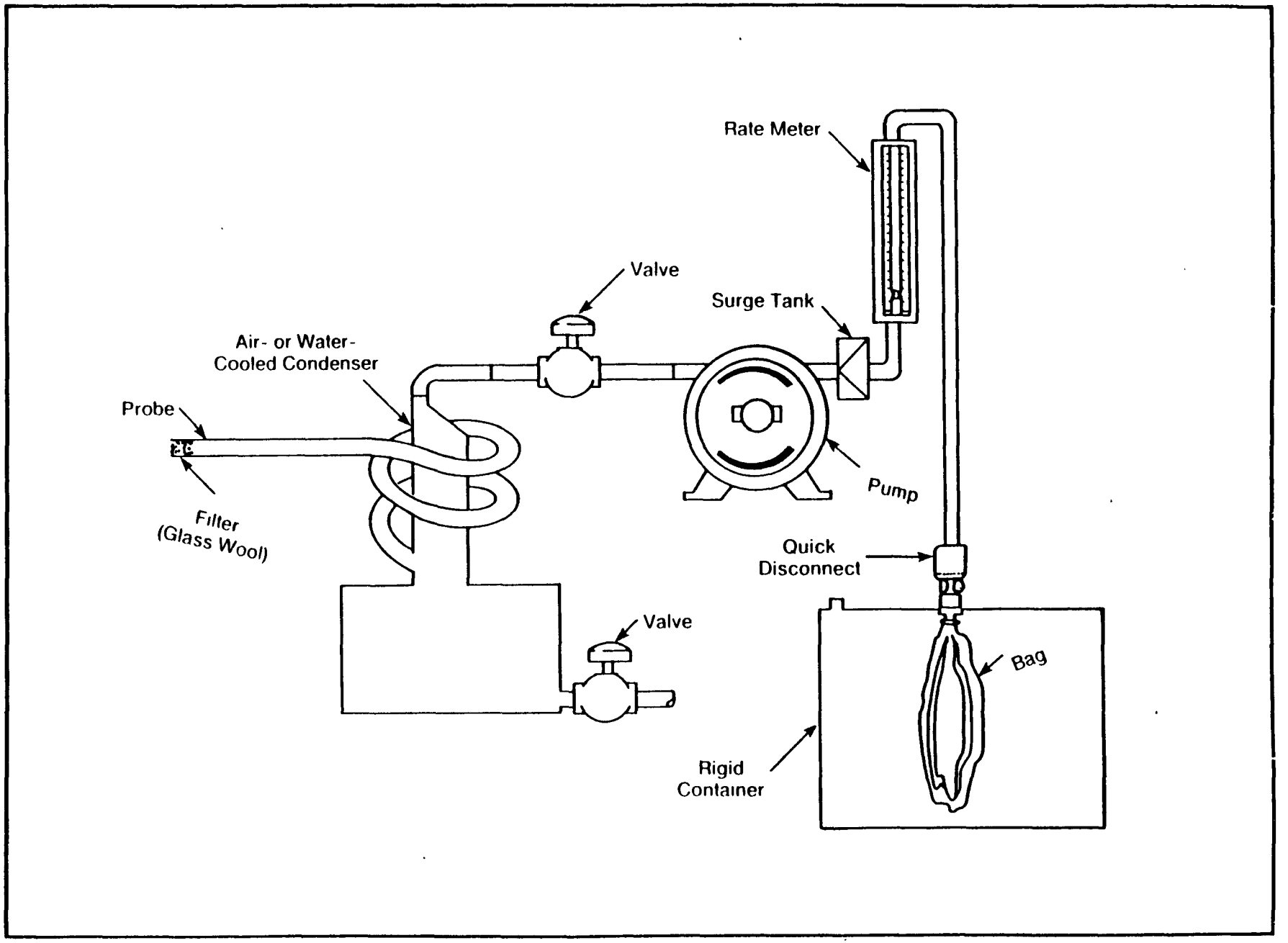

FIGURE C-10 INTEGRATED GAS SAMPLING TRAIN - EPA METHOD 3

TABLE C-1. TEST PARAMETERS MEASURED FOR EACH LOCATION BY TEST RUN

Test run	Process air inlet	Process off-gas manifolds	Afterburner inlet	Discharge stack
1-7	Flow Temperature Moisture Total VOC Fixed Gases	Flow Temperature --- Total VOC Fixed Gases	Flow Temperature Moisture Specific VOC Fixed Gases	--- --- --- --- ---
8-10	Flow Temperature Moisture Total VOC Fixed Gases	Flow Temperature --- Total VOC Fixed Gases	Flow Temperature Moisture Specific VOC Fixed Gases	Flow Temperature Moisture Specific VOC Fixed Gases Particulate Hydrogen Chloride
11-18	Flow Temperature Moisture Total VOC Fixed Gases	Flow Temperature --- Total VOC Fixed Gases	Flow Temperature Moisture Specific VOC Fixed Gases	Flow Temperature --- --- ---
19-23	Flow Temperature Moisture Total VOC Fixed Gases	Flow Temperature --- Specific VOC Fixed Gases	Flow Temperature Moisture Total VOC Fixed Gases	Flow Temperature --- --- ---
24	Flow Temperature Moisture	Flow Temperature ---	Flow Temperature Moisture	Flow Temperature ---
25-28	Flow Temperature Moisture	Flow Temperature Total VOC at Manifold 2	Flow Temperature Moisture	Flow Temperature ---

Testing and analysis protocols followed for each parameter measured are summarized in Table C-2. The following paragraphs and flow charts summarize the sample train preparation, testing procedures, sample recovery, and analytical techniques. Copies of the EPA Reference methods are included in the draft version of the Work Plan.[2]

C.3.1 Flow. Process air flows were measured every thirty minutes for each test run. Pitot tube orifice pressure differentials were recorded for all test locations within a ten-minute period in the following order: process air inlet, process off-gas manifolds, afterburner inlet, and stack.

C.3.2 Temperature. Processor air temperatures were recorded at each test location simultaneously with the air flow measurements.

C.3.3 Moisture. The moisture content of ambient air (process inlet air and infiltration air) was measured simultaneously with the process air flow and temperature measurements. Average moisture content of the afterburner inlet air was measured by an EPA Method 4 sampling train ran concurrently with the VOC sampling for each test run. Average moisture content of the stack gas stream was measured concurrently with the afterburner inlet VOC sampling by an EPA Method 4 sampling train for Test Runs 6 and 7 and incorporated with the Modified EPA Method 5 sampling train for Test Runs 8, 9, 10.

[2] Test Plan for a Pilot Investigation of Low Temperature Thermal Stripping of Volatile Organic Compounds From Soil at Letterkenny Army Depot (LEAD), Draft Version, June 1985.

TABLE C-2. TESTING PROTOCOLS FOR AIR SAMPLING

Parameters measured	EPA reference methods[5]
Air Temperature, Volumetric Flow, and Mass Rate	EPA 1, 2 (modified by using centerpoint velocities)
Fixed Gases (CO_2, O_2, and CO) Concentration	EPA 3 (stack only)
Moisture Concentration	EPA 4 (sling psychrometer at process inlet)
Volatile Organic Compounds Concentration	
Total VOC by CEM	EPA 25A (modified by using PID monitor for runs 1-11)
Specific VOC by MOD VOST	WESTON designed
Specific VOC by VOST	EPA 600/8-84-007, March 1984
Particulate and Hydrogen Chloride Concentration and Mass Rate	EPA 5 (modified by replacing impinger solutions with 0.1 N NaOH; analyzed for hydrochloric acid by standard methods)

[5] Code of Federal Regulations, Title 40, Part 60, Appendix A, "Standards of Performance For New Stationary Sources," 18 August 1977.

C.3.4 VOC's

C.3.4.1 Total VOC's by CEM system. A portable organic vapor analyzer was used to monitor the total VOC concentrations (ppm/volume) at the following locations: (1) each leg of the off-gas manifold system (Test Runs 1 through 18), (2) at the afterburner inlet (Test Runs 19 through 23), and (3) at manifold 2 (Test Runs 25 through 28). No monitoring was conducted during Run 24 due to a faulty analyzer.

C.3.4.1.1 Calibration of instrument. A three-point calibration was completed before and after each test run. The calibrations were completed using an ambient air source and calibration gases (i.e., 10 ppm, 100 ppm, and/or 1000 ppm benzene in air standard). A single mid-test span check was also performed during each test run.

C.3.4.1.2 Monitoring. During Test Runs 1 through 18, total VOC concentrations in each manifold leg were monitored and recorded every 15 minutes. A stainless steel 4-way switch valve assembly was used to sample manifolds 1, 2, and 3 and ambient air/calibrating gas. Total VOC concentrations were monitored for 5 minutes per leg.

During Test Runs 19 through 23 the instrument was drawing a continuous sample from the gases entering the afterburner. Total VOC concentrations were recorded every 15 minutes.

The pump suction on the OVA instrument used during Test Runs 25 through 28 was not strong enough to overcome the 23 inches of water column negative pressure present at the afterburner inlet test port. Therefore, the instrument was connected to the test port at manifold 2. Total VOC concentrations were recorded every 15 minutes.

C.3.4.2 Specific VOC's by the MOD VOST. A modified VOST train was used to measure the specific VOC concentrations at the afterburner inlet (Test Runs 1 through 18) and in each of the three legs of the manifold (Test Runs 19 through 23). The sample train preparation, testing, and sample recovery procedures are depicted in the flowcharts in Figures C-11, C-12, and C-13, respectively.

C.3.4.3 Specific VOC's by VOST. A VOST train was used at the discharge stack to measure the specific VOC concentrations in the gases. The sample train preparation, sampling, and sample recovery procedures are shown in the flowcharts in Figures C-14, C-15, and C-16, respectively. The integrated gas sample flow rate was less than or equal to 1 lpm for each two- to three-hour test. The VOST trap pairs were replaced with fresh traps every 20 minutes.

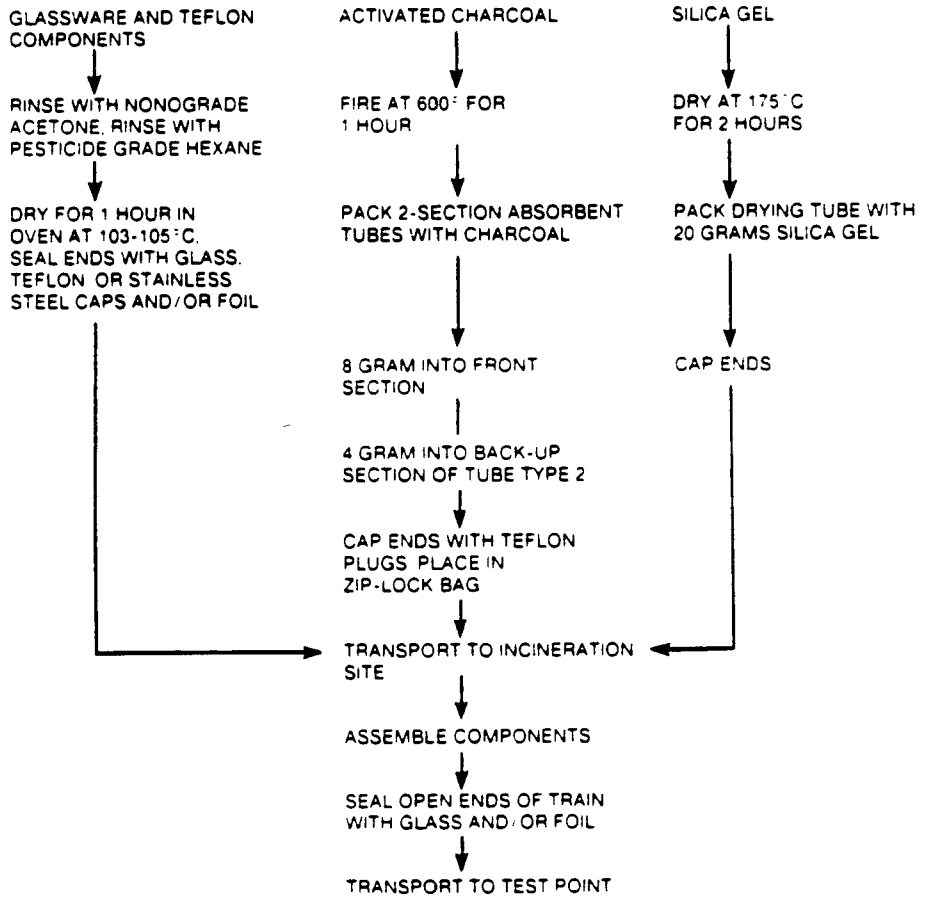

FIGURE C-11 PREPARATION PROCEDURES FOR MODIFIED VOLATILE ORGANICS SAMPLING TRAIN

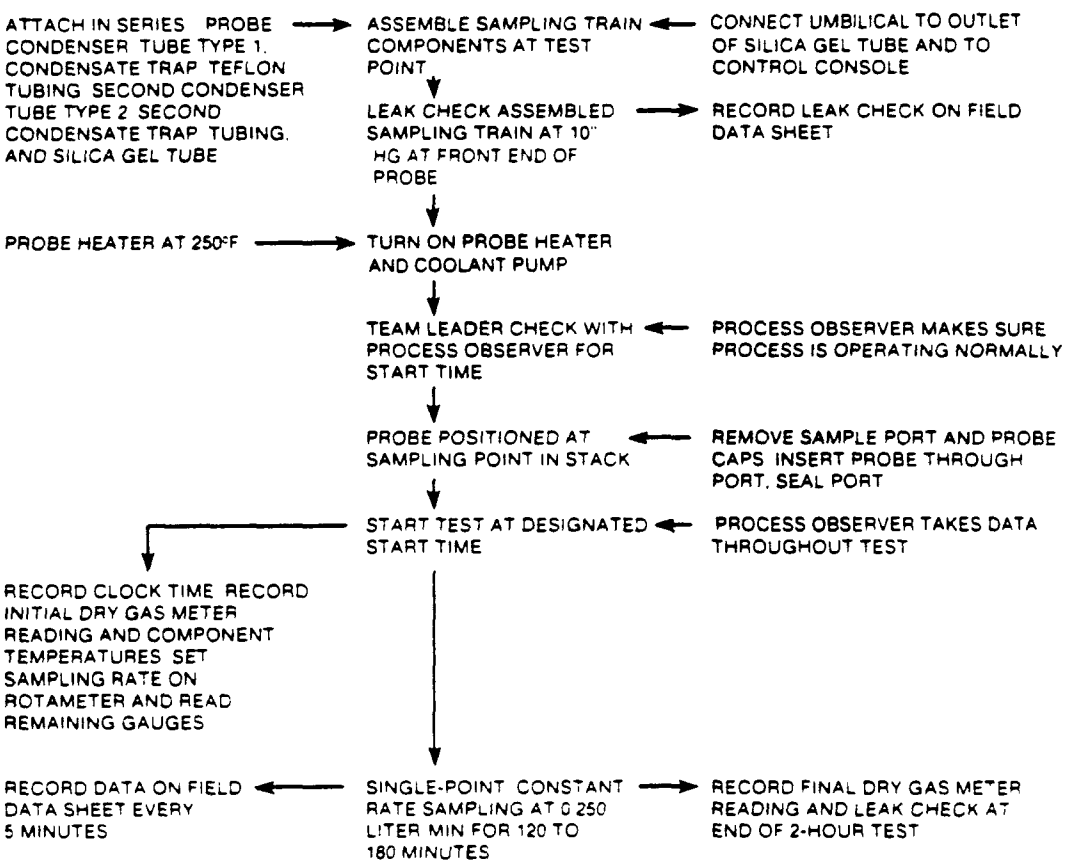

FIGURE C-12 SAMPLING PROCEDURES FOR VOLATILE ORGANICS USING MODIFIED VOST

PROBE AND CONDENSERS
↓
WASH WITH DISTILLED WATER
↓
RINSE INTO CONDENSATE TRAP

SORBENT TUBES
↓
REMOVE FROM TRAIN
↓
SEAL ENDS WITH TEFLON CAPS
↓
PLACE IN LABELLED ZIP-LOCK BAG. STORE AT WET ICE TEMPERATURE (4°C). COMPLETE CUSTODY FORM SECURE SAMPLES FOR SHIPMENT

CONDENSATE TRAPS
↓
POUR INTO VOA 40-ML VIAL & SEAL WITH TEFLON CAP STORE AT WET ICE TEMPERATURE (4°C). COMPLETE CUSTODY FORM. SECURE SAMPLES FOR SHIPMENT

SILICA GEL
↓
WEIGH RECORD VOLUME INDICATE REGENERATION REQUIRED

FIGURE C-13 SAMPLE RECOVERY PROCEDURES FOR VOLATILE ORGANICS USING MODIFIED VOST

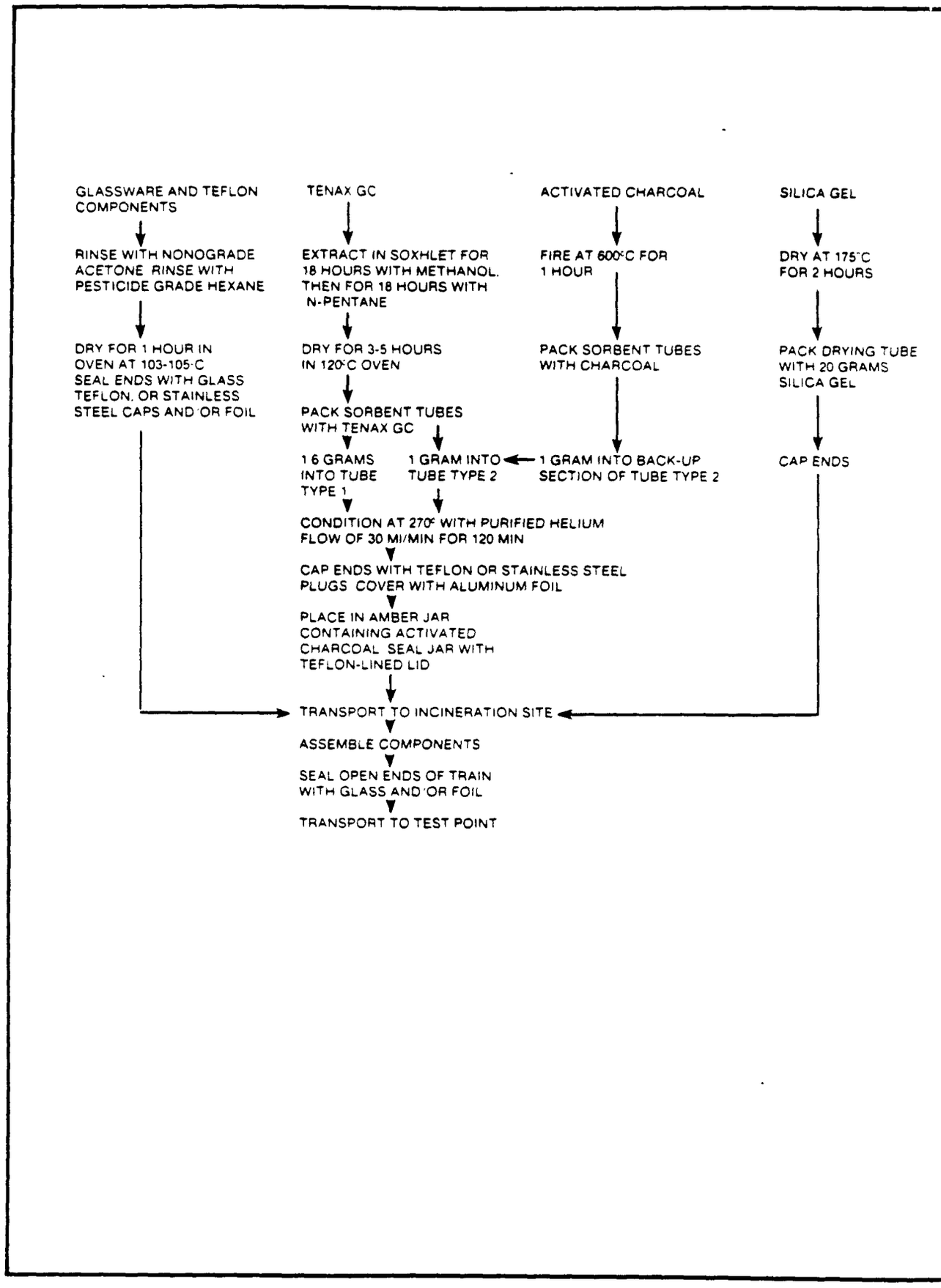

FIGURE C-14 PREPARATION PROCEDURES FOR VOLATILE ORGANICS SAMPLING TRAIN

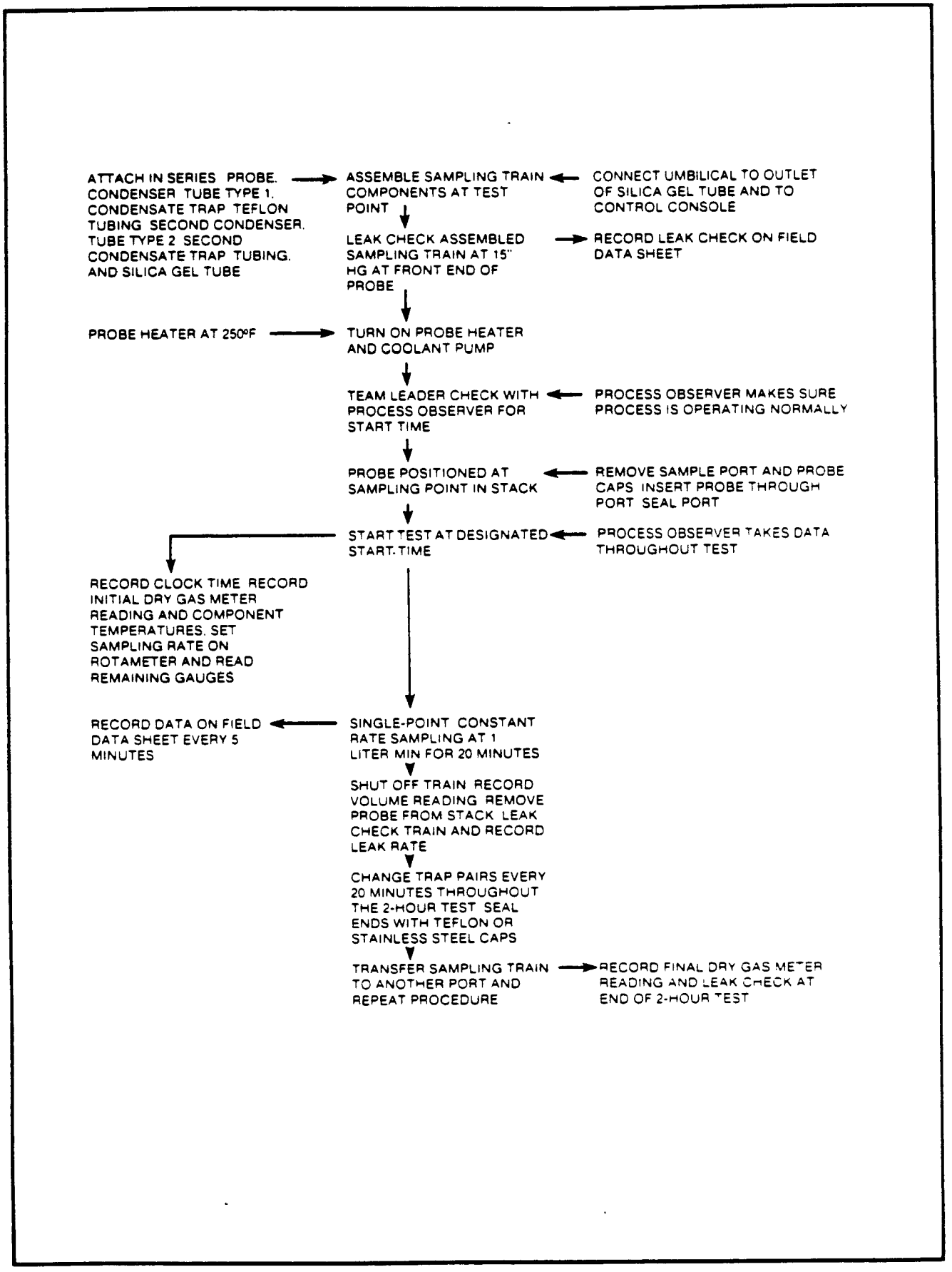

FIGURE C-15 SAMPLING PROCEDURES FOR VOLATILE ORGANICS

PROBE AND CONDENSERS
↓
WASH WITH DISTILLED WATER
↓
RINSE INTO CONDENSATE TRAPS

SORBENT TUBES
↓
REMOVE FROM TRAIN
↓
SEAL ENDS WITH TEFLON OR STAINLESS STEEL CAPS AND COVER WITH ALUMINUM FOIL
↓
PLACE IN LABELLED AMBER JAR CONTAINING ACTIVATED CHARCOAL. SEAL JAR WITH TEFLON LINED LID STORE AT WET ICE TEMPERATURE (4°C) COMPLETE CUSTODY FORM SECURE SAMPLES FOR SHIPMENT

CONDENSATE TRAPS
↓
POUR INTO VOA 30-ML VIAL & SEAL WITH TEFLON CAP STORE AT WET ICE TEMPERATURE (4°C). COMPLETE CUSTODY FORM SECURE SAMPLES FOR SHIPMENT

SILICA GEL
↓
WEIGH RECORD VOLUME. INDICATE REGENERATION REQUIRED

FIGURE C-16 SAMPLE RECOVERY PROCEDURES FOR VOLATILE ORGANICS

C.3.5 Particulate and HCl. Figures C-17, C-18, and C-19 illustrate the procedures that were used to prepare the particulate/HCl sampling train prior to each test, the procedures used to sample the stack gases, and the procedures used to recover the samples from the train. Procedures were in accordance with EPA Method 5 except for minor modifications in train configuration and sample recovery procedures for HCl. Immediately following sample recovery, the sampling train was recharged, components reassembled, and the openings sealed to prevent contamination. Tests were generally two to three hours in duration, 30 dscf in size, and isokinetic $\pm$10 percent.

C.3.6 Fixed gases (CO, CO_2, O_2). Figure C-20 illustrates the procedure used to measure the CO, CO_2, and O_2 content of the stack gases. No special preparations were required apart from making certain the gas sampling bag, train, and Orsat were leak-free and the Orsat contained fresh reagents.

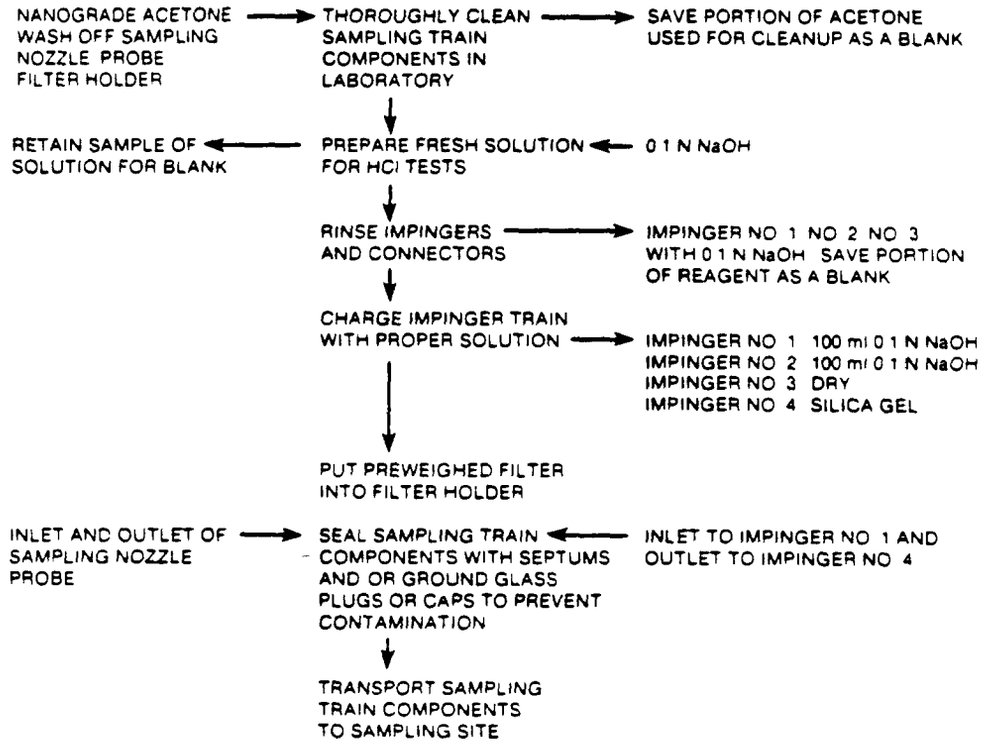

FIGURE C-17 PREPARATION PROCEDURES FOR PARTICULATE AND HCl SAMPLING TRAIN

FIGURE C-18 SAMPLING PROCEDURES FOR PARTICULATE AND HCl SAMPLING TRAIN

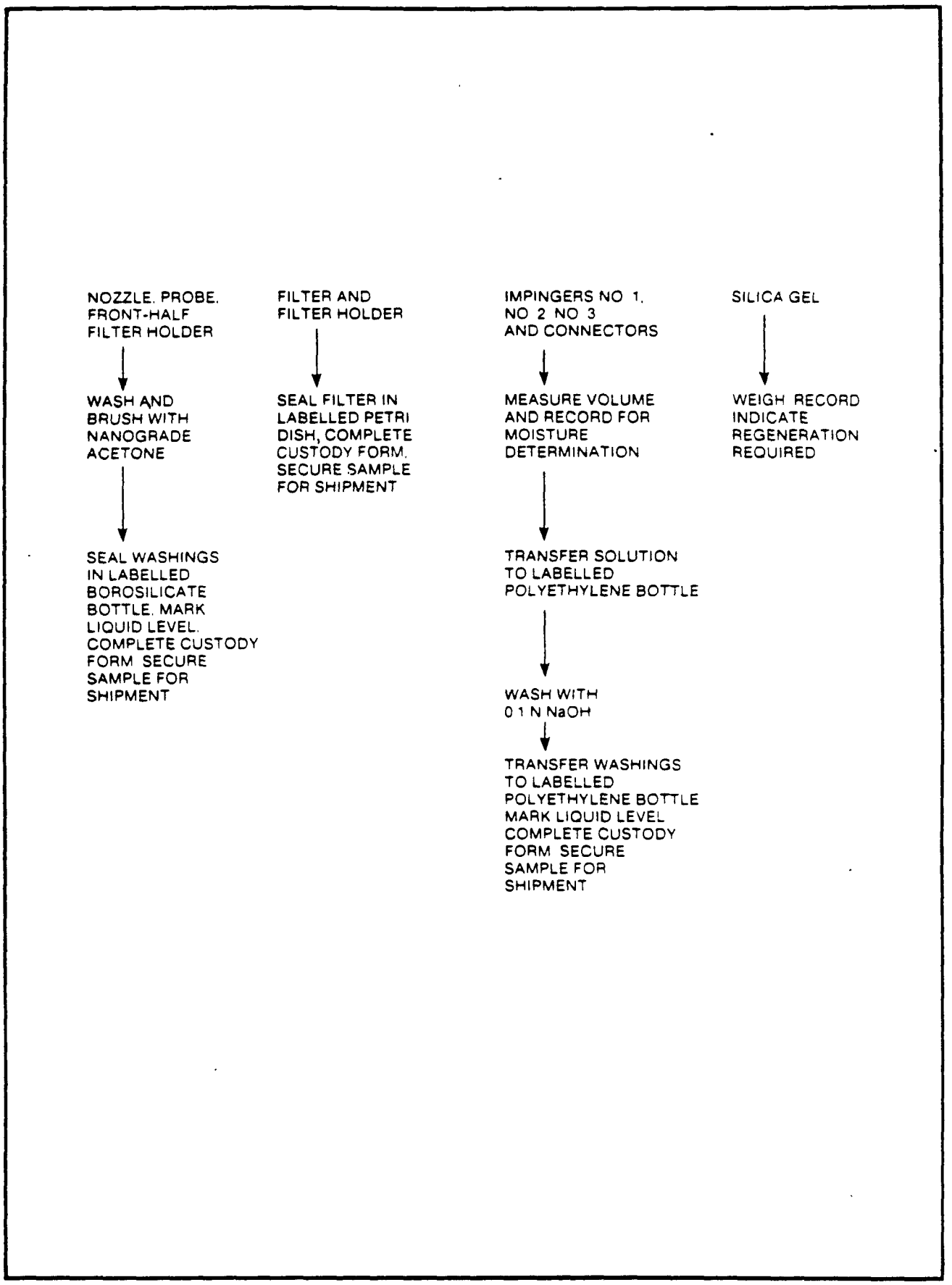

FIGURE C-19 SAMPLE RECOVERY PROCEDURES FOR PARTICULATE AND HCl

CONNECT PROBE TO CONDENSATE TRAP → ASSEMBLE SAMPLING TRAIN COMPONENTS AT SAMPLING SITE

↓

LEAK CHECK TRAIN

↓

EVACUATE TEDLAR BAG AND CLOSE VALVE

↓

CONNECT OUTLET OF CONDENSATE TRAP TO INLET OF PUMP
CONNECT PUMP TO ROTAMETER

↓

POSITION PROBE AT TRAVERSE POINT IN STACK

↓

TURN ON PUMP AND PURGE TRAIN FOR 5 MINUTES

↓

CONNECT ROTAMETER TO TEDLAR BAG WITH TYGON TUBING

↓

OPEN VALVE
SAMPLE AT CONSTANT RATE (≈0.2 LPM) FOR DURATION OF TRAVERSE

↓

SHUT-OFF PUMP
REMOVE PROBE FROM STACK
CAP PROBE

↓

SAMPLE OTHER 3 PORTS IN LIKE MANNER

↓

CLOSE VALVE ON BAG AT END OF TEST
ANALYZE CONTENTS USING LEAK-FREE ORSAT

FIGURE C-20 SAMPLING PROCEDURES FOR CO_2, O_2, AND CO

APPENDIX D

FEDERAL REGULATIONS

A. Asbestos

- Chapter 27
  Occupational Safety and Health
  Administration (OSHA) 29 CFR 1910.1001

- Chapter 1
  Environmental Protection Agency (EPA)
  40 CFR Part 61, Subpart B

B. Hazardous Waste

- Part 260
  Hazardous Waste Management
  System: General
  40 CFR 260

- Part 261
  Identification and Listing
  of Hazardous Waste
  40 CFR 261

- Part 234
  Subpart O
  Incinerators
  40 CFR 264.340 - 264.347

WESTON

A. ASBESTOS

CHAPTER 27

OSHA REGULATIONS

29 CFR 1910.1001

6060A

NOTE Conversion factors—
mppcf x 35 3 = million particles per cubic meter
= particles per c c

[a] Millions of particles per cubic foot of air, based on impinger samples counted by light-field technics

[b] The percentage of crystalline silica in the formula is the amount determined from air-borne samples, except in those instances in which other methods have been shown to be applicable

[c] Both concentration and percent quartz for the application of this limit are to be determined from the fraction passing a size-selector with the following characteristics

[d] Containing <1% quartz. If 1% quartz, use quartz limit.

Aerodynamic diameter (unit density sphere)	Percent passing selector
2	90
2 5	75
3 5	50
5 0	25
10	0

The measurements under this note refer to the use of an AEC instrument The respirable fraction of coal dust is determined with a MRE, the figure corresponding to that of 2 4 Mg/M³ in the table for coal dust is 4.5 Mg/M³

(Secretary of Labor's Order No. 8-76 (41 CFR Part 25059); 29 CFR Part 1911)

[39 FR 23502, June 27, 1974. Redesignated and amended at 40 FR 23073, May 28, 1975; 42 FR 22525, May 3, 1977; 43 FR 2600, Jan. 17, 1978; 43 FR 5963, Feb. 10, 1978; 43 FR 13563, Mar. 31, 1978; 43 FR 19624, May 5, 1978; 43 FR 27394, June 23, 1978; 43 FR 45809, Oct. 3, 1978; 43 FR 53007, Nov. 14, 1978; 43 FR 57602, Dec. 8, 1978]

§ 1910.1001 Asbestos.

(a) *Definitions.* For the purpose of this section, (1) "Asbestos" includes chrysotile, amosite, crocidolite, tremolite, anthophyllite, and actinolite.

(2) "Asbestos fibers" means asbestos fibers longer than 5 micrometers.

(b) *Permissible exposure to airborne concentrations of asbestos fibers*—(1) *Standard effective July 7, 1972.* The 8-hour time-weighted average airborne concentrations of asbestos fibers to which any employee may be exposed shall not exceed five fibers, longer than 5 micrometers, per cubic centimeter of air, as determined by the method prescribed in paragraph (e) of this section.

(2) *Standard effective July 1, 1976.* The 8-hour time-weighted average airborne concentrations of asbestos fibers to which any employee may be exposed shall not exceed two fibers, longer than 5 micrometers, per cubic centimeter of air, as determined by the method prescribed in paragraph (e) of this section.

(3) *Ceiling concentration.* No employee shall be exposed at any time to airborne concentrations of asbestos fibers in excess of 10 fibers, longer than 5 micrometers, per cubic centimeter of air, as determined by the method prescribed in paragraph (e) of this section.

(c) *Methods of compliance*—(1) *Engineering methods.* (i) *Engineering controls.* Engineering controls, such as, but not limited to, isolation, enclosure, exhaust ventilation, and dust collection, shall be used to meet the exposure limits prescribed in paragraph (b) of this section.

(ii) *Local exhaust ventilation.* (a) Local exhaust ventilation and dust collection systems shall be designed, constructed, installed, and maintained in accordance with the American National Standard Fundamentals Governing the Design and Operation of Local Exhaust Systems, ANSI Z9.2-1971, which is incorporated by reference herein.

(b) See § 1910.6 concerning the availability of ANSI Z9.2-1971, and the maintenance of a historic file in connection therewith. The address of the American National Standards Institute is given in § 1910.100.

(iii) *Particular tools.* All hand-operated and power operated tools which may produce or release asbestos fibers in excess of the exposure limits prescribed in paragraph (b) of this section, such as, but not limited to, saws scorers, abrasive wheels, and drills, shall be provided with local exhaust ventilation systems in accordance with subdivision (ii) of this subparagraph.

(2) *Work practices*—(i) *Wet methods.* Insofar as practicable, asbestos shall be handled, mixed, applied, removed, cut, scored, or otherwise worked in a wet state sufficient to prevent the emission of airborne fibers in excess of the exposure limits prescribed in paragraph (b) of this section, unless the usefulness of the product would be diminished thereby.

(ii) *Particular products and operations.* No asbestos cement, mortar, coating, grout, plaster, or similar material containing asbestos shall be removed from bags, cartons, or other

containers in which they are shipped, without being either wetted, or enclosed, or ventilated so as to prevent effectively the release of airborne asbestos fibers in excess of the limits prescribed in paragraph (b) of this section.

(iii) *Spraying, demolition, or removal.* Employees engaged in the spraying of asbestos, the removal, or demolition of pipes, structures, or equipment covered or insulated with asbestos, and in the removal or demolition of asbestos insulation or coverings shall be provided with respiratory equipment in accordance with paragraph (d)(2)(iii) of this section and with special clothing in accordance with paragraph (d)(3) of this section.

(d) *Personal protective equipment*—(1) Compliance with the exposure limits prescribed by paragraph (b) of this section may not be achieved by the use of respirators or shift rotation of employees, except:

(i) During the time period necessary to install the engineering controls and to institute the work practices required by paragraph (c) of this section;

(ii) In work situations in which the methods prescribed in paragraph (c) of this section are either technically not feasible or feasible to an extent insufficient to reduce the airborne concentrations of asbestos fibers below the limits prescribed by paragraph (b) of this section; or

(iii) In emergencies.

(iv) Where both respirators and personnel rotation are allowed by paragraphs (d)(1) (i), (ii), or (iii) of this section, and both are practicable, personnel rotation shall be preferred and used.

(2) Where a respirator is permitted by paragraph (d)(1) of this section, it shall be selected from among those approved by the Bureau of Mines, Department of the Interior, or the National Institute for Occupational Safety and Health, Department of Health, Education, and Welfare, under the provisions of 30 CFR Part 11 (37 F.R. 6244, Mar. 25, 1972), and shall be used in accordance with subdivisions (i), (ii), (iii), and (iv) of this subparagraph.

(i) *Air purifying respirators.* A reusable or single use air purifying respirator, or a respirator described in paragraphs (d)(2) (ii) or (iii) of this section, shall be used to reduce the concentrations of airborne asbestos fibers in the respirator below the exposure limits prescribed in paragraph (b) of this section, when the ceiling or the 8-hour time-weighted average airborne concentrations of asbestos fibers are reasonably expected to exceed no more than 10 times those limits.

(ii) *Powered air purifying respirators.* A full facepiece powered air purifying respirator, or a powered air purifying respirator, or a respirator described in paragraph (d)(2)(iii) of this section, shall be used to reduce the concentrations of airborne asbestos fibers in the respirator below the exposure limits prescribed in paragraph (b) of this section, when the ceiling or the 8-hour time-weighted average concentrations of asbestos fibers are reasonably expected to exceed 10 times, but not 100 times, those limits.

(iii) *Type "C" supplied-air respirators, continuous flow or pressure-demand class.* A type "C" continuous flow or pressure-demand, supplied-air respirator shall be used to reduce the concentrations of airborne asbestos fibers in the respirator below the exposure limits prescribed in paragraph (b) of this section, when the ceiling or the 8-hour time-weighted average airborne concentrations of asbestos fibers are reasonably expected to exceed 100 times those limits.

(iv) *Establishment of a respirator program.* (*a*) The employer shall establish a respirator program in accordance with the requirements of the American National Standards Practices for Respiratory Protection, ANSI Z88.2-1969, which is incorporated by reference herein.

(*b*) See § 1910.6 concerning the availability of ANSI Z88.2-1969 and the maintenance of a historic file in connection therewith. The address of the American National Standards Institute is given in § 1910.100.

(*c*) No employee shall be assigned to tasks requiring the use of respirators if, based upon his most recent examination, an examining physician determines that the employee will be

unable to function normally wearing a respirator, or that the safety or health of the employee or other employees shall be impaired by his use of a respirator. Such employee shall be rotated to another job or given the opportunity to transfer to a different position whose duties he is able to perform with the same employer, in the same geographical area and with the same seniority, status, and rate of pay he had just prior to such transfer, if such a different position is available.

(3) Special clothing: The employer shall provide, and require the use of, special clothing, such as coveralls or similar whole body clothing, head coverings, gloves, and foot coverings for any employee exposed to airborne concentrations of asbestos fibers, which exceed the ceiling level prescribed in paragraph (b) of this section.

(4) Change rooms. (i) At any fixed place of employment exposed to airborne concentrations of asbestos fibers in excess of the exposure limits prescribed in paragraph (b) of this section, the employer shall provide change rooms for employees working regularly at the place.

(ii) Clothes lockers. The employer shall provide two separate lockers or containers for each employee, so separated or isolated as to prevent contamination of the employee's street clothes from his work clothes.

(iii) Laundering: (a) Laundering of asbestos contaminated clothing shall be done so as to prevent the release of air-borne asbestos fibers in excess of the exposure limits prescribed in paragraph (b) of this section.

(b) Any employer who gives asbestos-contaminated clothing to another person for laundering shall inform such person of the requirement in paragraph (d)(4)(iii)(a) of this section to effectively prevent the release of airborne asbestos fibers in excess of the exposure limits prescribed in paragraph (b) of this section.

(c) Contaminated clothing shall be transported in sealed impermeable bags, or other closed impermeable containers, and labeled in accordance with paragraph (g) of this section.

(e) *Method of measurement.* All determinations of airborne concentrations of asbestos fibers shall be made by the membrane filter method 400-450 × (magnification) (4 mm [illegible] objective) with phase contrast [illegible] mination.

(f) *Monitoring.* (1) [illegible] *nations.* Within 6 mo[illegible] cation of this section [illegible] shall cause every pla[illegible] where asbestos fibers [illegible] be monitored in such [illegible] mine whether [illegible] to asbestos [illegible] prescribed [illegible] on. If the [illegible]

porosity mounted in an open-face filter holder. Samples shall be taken for the determination of the 8-hour time-weighted average airborne concentrations and of the ceiling concentrations of asbestos fibers.

(ii) Sampling frequency and patterns. After the initial determinations required by paragraph (f)(1) of this section, samples shall be of such frequency and pattern as to represent with reasonable accuracy the levels of exposure of employees. In no case shall the sampling be done at intervals greater than 6 months for employees whose exposure to asbestos may reasonably be foreseen to exceed the limits prescribed by paragraph (b) of this section.

(3) *Environmental monitoring.* (i) Samples shall be collected from areas of a work environment which are representative of the airborne concentrations of asbestos fibers which may reach the breathing zone of employees. Samples shall be collected on a membrane filter of 0.8 micrometer porosity mounted in an open-face filter holder. Samples shall be taken for the determination of the 8-hour time-weighted average airborne concentrations and of the ceiling concentrations of asbestos fibers.

(ii) *Sampling frequency and patterns.* After the initial determinations required by paragraph (f)(1) of this section, samples shall be of such fre-

quency and pattern as to represent with reasonable accuracy the levels of exposure of the employees. In no case shall sampling be at intervals greater than 6 months for employees whose exposures to asbestos may reasonably be foreseen to exceed the exposure limits prescribed in paragraph (b) of this section.

(4) *Employee observation of monitoring.* Affected employees, or their representatives, shall be given a reasonable opportunity to observe any monitoring required by this paragraph and shall have access to the records thereof.

(g) *Caution signs and labels.* (1) *Caution signs.* (i) *Posting.* Caution signs shall be provided and displayed at each location where airborne concentrations of asbestos fibers may be in excess of the exposure limits prescribed in paragraph (b) of this section. Signs shall be posted at such a distance from such a location so that an employee may read the signs and take necessary protective steps before entering the area marked by the signs. Signs shall be posted at all approaches to areas containing excessive concentrations of airborne asbestos fibers.

(ii) *Sign specifications.* The warning signs required by paragraph (g)(1)(i) of this section shall conform to the requirements of 20" × 14" vertical format signs specified in § 1910.145(d)(4), and to this subdivision. The signs shall display the following legend in the lower panel, with letter sizes and styles of a visibility at least equal to that specified in this subdivision.

Legend	*Notation*
Asbestos	1 Sans Serif Gothic or Block
Dust Hazard	¾ Sans Serif Gothic or Block
Avoid Breathing Dust	¼ Gothic
Wear Assigned Protective Equipment	¼ Gothic
Do Not Remain In Area Unless Your Work Requires It	¼ Gothic
Breathing Asbestos Dust May Be Hazardous To Your Health	14 point Gothic

Spacing between lines shall be at least equal to the height of the upper of any two lines.

(2) *Caution labels*—(i) *Labeling.* Caution labels shall be affixed to all raw materials, mixtures, scrap, waste, debris, and other products containing asbestos fibers, or to their containers, except that no label is required where asbestos fibers have been modified by a bonding agent, coating, binder, or other material so that during any reasonably foreseeable use, handling, storage, disposal, processing, or transportation, no airborne concentrations of asbestos fibers in excess of the exposure limits prescribed in paragraph (b) of this section will be released.

(ii) *Label specifications.* The caution labels required by paragraph (g)(2)(i) of this section shall be printed in letters of sufficient size and contrast as to be readily visible and legible. The label shall state:

CAUTION

Contains Asbestos Fibers

Avoid Creating Dust

Breathing Asbestos Dust May Cause Serious Bodily Harm

(h) *Housekeeping*—(1) *Cleaning.* All external surfaces in any place of employment shall be maintained free of accumulations of asbestos fibers if, with their dispersion, there would be an excessive concentration.

(2) *Waste disposal.* Asbestos waste, scrap, debris, bags, containers, equipment, and asbestos-contaminated clothing, consigned for disposal, which may produce in any reasonably foreseeable use, handling, storage, processing, disposal, or transportation airborne concentrations of asbestos fibers in excess of the exposure limits prescribed in paragraph (b) of this section shall be collected and disposed of in sealed impermeable bags, or other closed, impermeable containers.

(i) *Recordkeeping*—(1) *Exposure records.* Every employer shall maintain records of any personal or environmental monitoring required by this section. Records shall be maintained for a period of at least 20 years and shall be made available upon request to the Assistant Secretary of Labor for Occupational Safety and Health, the Director of the National Institute for Occupational Safety and Health, and to authorized representatives of either.

(2) *Access.* Employee exposure records required by this paragraph shall be provided upon request to employ-

ees, designated representatives, and the Assistant Secretary in accordance with 29 CFR 1910.20 (a)-(e) and (g)-(i).

(3) *Employee notification.* Any employee found to have been exposed at any time to airborne concentrations of asbestos fibers in excess of the limits prescribed in paragraph (b) of this section shall be notified in writing of the exposure as soon as practicable but not later than 5 days of the finding. The employee shall also be timely notified of the corrective action being taken.

(j) *Medical examinations*—(1) *General.* The employer shall provide or make available at his cost, medical examinations relative to exposure to asbestos required by this paragraph.

(2) *Preplacement.* The employer shall provide or make available to each of his employees, within 30 calendar days following his first employment in an occupation exposed to airborne concentrations of asbestos fibers, a comprehensive medical examination, which shall include, as a minimum, a chest roentgenogram (posterior-anterior 14 × 17 inches), a history to elicit symptomatology of respiratory disease, and pulmonary function tests to include forced vital capacity (FVC) and forced expiratory volume at 1 second ($FEV_{1.0}$).

(3) *Annual examinations.* On or before January 31, 1973, and at least annually thereafter, every employer shall provide, or make available, comprehensive medical examinations to each of his employees engaged in occupations exposed to airborne concentrations of asbestos fibers. Such annual examination shall include, as a minimum, a chest roentgenogram (posterior-anterior 14 × 17 inches), a history to elicit symptomatology of respiratory disease, and pulmonary function tests to include forced vital capacity (FVC) and forced expiratory volume at 1 second ($FEV_{1.0}$).

(4) *Termination of employment.* The employer shall provide, or make available, within 30 calendar days before or after the termination of employment of any employee engaged in an occupation exposed to airborne concentrations of asbestos fibers, a comprehensive medical examination which shall include, as a minimum, a chest roentgenogram (posterior-anterior 14 × 17 inches), a history to elicit symptomatology of respiratory disease, and pulmonary function tests to include forced vital capacity (FVC) and forced expiratory volume at 1 second ($FEV_{1.0}$).

(5) *Recent examinations.* No medical examination is required of any employee, if adequate records show that the employee has been examined in accordance with this paragraph within the past 1-year period.

(6) *Medical records*—(i) *Maintenance.* Employers of employees examined pursuant to this paragraph shall cause to be maintained complete and accurate records of all such medical examinations. Records shall be retained by employers for at least 20 years.

(ii) *Access.* Records of the medical examinations required by this paragraph shall be provided upon request to employees, designated representatives, and the Assistant Secretary in accordance with 29 CFR 1910.20 (a)-(e) and (g)-(i). These records shall also be provided upon the request to the Director of NIOSH. Any physician who conducts a medical examination required by this paragraph shall furnish to the employer of the examined employee all the information specifically required by this paragraph, and any other medical information related to occupational exposure to asbestos fibers.

(Secs. 6(b), 8(c) and 8(g) (84 Stat. 1593, 1599, 1600, 29 U.S.C. 655, 657), the Secretary of Labor's Order 8-76 (41 FR 25059) and 29 CFR Part 1911, Ch. XVII of Title 29)

[39 FR 23502, June 27, 1974. Redesignated at 40 FR 27073, May 28, 1975, and amended at 41 FR 11505, Mar. 19, 1976, 45 FR 35281, May 23, 1980]

EFFECTIVE DATE NOTE: At 45 FR 35281, May 23, 1980, paragraphs (i)(2) and (j)(6)(ii) of § 1910.1001 were revised, effective August 21, 1980. For the convenience of the user the superseded text appears below.

§ 1910.1001 Asbestos

* * * * *

(i) * * *

(2) *Employee access.* Every employee and former employee shall have reasonable

access to any record required to be maintained by paragraph (l)(1) of this section, which indicates the employee's own exposure to asbestos fibers.

* * * * *

(j) * * *

(6) * * *

(ii) *Access.* The contents of the records of the medical examinations required by this paragraph shall be made available, for inspection and copying, to the Assistant Secretary of Labor for Occupational Safety and Health, the Director of NIOSH, to authorized physicians and medical consultants of either of them, and, upon the request of an employee or former employee, to his physician. Any physician who conducts a medical examination required by this paragraph shall furnish to the employer of the examined employee all the information specifically required by this paragraph, and any other medical information related to occupational exposure to asbestos fibers.

* * * * *

§ 1910.1002 Coal tar pitch volatiles; interpretation of term.

As used in § 1910.1000 (Table Z-1), coal tar pitch volatiles include the fused polycyclic hydrocarbons which volatilize from the distillation residues of coal, petroleum, wood, and other organic matter.

(Sec. 8(g), 84 Stat. 1600, 29 U.S.C. 657)

[39 FR 23502, June 27, 1974. Redesignated and amended at 40 FR 23073, May 28, 1975]

§ 1910.1003 4-Nitrobiphenyl.

(a) *Scope and application.* (1) This section applies to any area in which 4-Nitrobiphenyl, Chemical Abstracts Service Registry Number 92933 is manufactured, processed, repackaged, released, handled, or stored, but shall not apply to trans-shipment in sealed containers, except for the labeling requirements under paragraphs (e) (2), (3), and (4) of this section.

(2) This section shall not apply to solid or liquid mixtures containing less than 0.1 percent by weight or volume of 4-Nitrobiphenyl.

(b) *Definitions.* For the purposes of this section: (1) "Absolute filter" is one capable of retaining 99.97 percent of a mono disperse aerosol of 0.3 μm particles.

(2) "Authorized employee" means an employee whose duties require him to be in the regulated area and who has been specifically assigned by the employer.

(3) "Clean change room" means a room where employees put on clean clothing and/or protective equipment in an environment free of 4-Nitrobiphenyl. The clean change room shall be contiguous to and have an entry from a shower room, when the shower room facilities are otherwise required in this section.

(4) "Closed system" means an operation involving 4-Nitrobiphenyl where containment prevents the release of 4-Nitrobiphenyl into regulated areas, non-regulated areas, or the external environment.

(5) "Decontamination" means the inactivation of 4-Nitrobiphenyl or its safe disposal.

(6) "Director" means the Director, National Institute for Occupational Safety and Health, or any person directed by him or the Secretary of Health, Education, and Welfare to act for the Director.

(7) "Disposal" means the safe removal of 4-Nitrobiphenyl from the work environment.

(8) "Emergency" means an unforeseen circumstance or set of circumstances resulting in the release of 4-Nitrobiphenyl which may result in exposure to or contact with 4-Nitrobiphenyl.

(9) "External environment" means any environment external to regulated and nonregulated areas.

(10) "Isolated system" means a fully enclosed structure other than the vessel of containment of 4-Nitrobiphenyl, which is impervious to the passage of 4-Nitrobiphenyl, and which would prevent the entry of 4-Nitrobiphenyl into regulated areas, nonregulated areas, or the external environment, should leakage or spillage from the vessel of containment occur.

(11) "Laboratory type hood" is a device enclosed on three sides and the top and bottom, designed and maintained so as to draw air inward at an average linear face velocity of 150 feet per minute with a minimum of 125 feet per minute; designed, constructed, and maintained in such a way that an

A. ASBESTOS

CHAPTER 1

EPA REGULATIONS

40 CFR Part 61, Subpart B

FEDERAL AIR REGULATIONS GOVERNING REMOVAL OF FRIABLE ASBESTOS.

Adopted by Allegheny County in Section 515 of Article XX, effective January 1, 1981.

PART 61—NATIONAL EMISSION STANDARDS FOR HAZARDOUS AIR POLLUTANTS

Subpart A—General Provisions

Sec.
61.01 Applicability.
61.02 Definitions.
61.03 Units and abbreviations
61.04 Address
61.05 Prohibited activities
61.06 Determination of construction or modification
61.07 Application for approval of construction or modification
61.08 Approval by Administrator.
61.09 Notification of startup
61.10 Source reporting and waiver request
61.11 Waiver of compliance
61.12 Emission tests and monitoring.
61.13 Waiver of emission tests
61.14 Source test and analytical methods
61.15 Availability of information
61.16 State authority
61.17 Circumvention

Subpart B—National Emission Standard for Asbestos

61.20 Applicability
61.21 Definitions
61.22 Emission standard
61.23 Air-cleaning
61.24 Reporting
61.25 Waste disposal sites

Subpart C—National Emission Standard for Beryllium

61.30 Applicability
61.31 Definitions
61.32 Emission standard
61.33 Stack sampling
61.34 Air sampling

Subpart D—National Emission Standard for Beryllium Rocket Motor Firing

61.40 Applicability
61.41 Definitions.
61.42 Emission standard.
61.43 Emission testing -rocket firing or propellant disposal
61.44 Stack sampling

Subpart E—National Emission Standard for Mercury

61.50 Applicability
61.51 Definitions
61.52 Emission standard
61.53 Stack sampling
61.54 Sludge sampling
61.55 Emission monitoring

(2) Requiring the owner or operator of a stationary source, other than a stationary source owned or operated by the United States, to obtain permits, licenses, or approvals prior to initiating construction, modification, or operation of such source.

(Sec. 116, Clean Air Act as amended (42 U.S.C. 7416))

[38 FR 8826, Apr. 6, 1973, as amended at 43 FR 8800, Mar. 3, 1978]

§ 61.17 Circumvention.

No owner or operator subject to the provisions of this part shall build, erect, install, or use any article machine, equipment, process, or method, the use of which conceals an emission which would otherwise constitute a violation of an applicable standard. Such concealment includes, but is not limited to, the use of gaseous dilutants to achieve compliance with a visible emissions standard, and the piecemeal carrying out of an operation to avoid coverage by a standard that applies only to operations larger than a specified size.

[40 FR 48299, Oct. 14, 1975]

Subpart B—National Emission Standard for Asbestos

§ 61.20 Applicability.

The provisions of this subpart are applicable to those sources specified in § 61.22.

§ 61.21 Definitions.

Terms used in this subpart are defined in the act, in Subpart A of this part, or in this section as follows:

(a) "Asbestos" means actinolite, amosite, anthophyllite, chrysotile, crocidolite, tremolite.

(b) "Asbestos material" means asbestos or any material containing asbestos.

(c) "Particulate asbestos material" means finely divided particles of asbestos material.

(d) "Asbestos tailings" means any solid waste product of asbestos mining or milling operations which contains asbestos.

(e) "Outside air" means the air outside buildings and structures.

(f) "Visible emissions" means any emissions which are visually detectable without the aid of instruments and which contain particulate asbestos material.

(g) "Asbestos mill" means any facility engaged in the conversion of any intermediate step in the conversion of asbestos or into commercial asbestos. Outside storage of asbestos materials is not considered a part of such facility.

(h) "Commercial asbestos" means any variety of asbestos which is produced by extracting asbestos from asbestos ore.

(i) "Manufacturing" means the combining of commercial asbestos, or in the case of woven friction products the combining of textiles containing commercial asbestos, with any other material(s), including commercial asbestos, and the processing of this combination into a product as specified in § 61.22(c).

(j) "Demolition" means the wrecking or taking out of any load-supporting structural member and any related removing or stripping of friable asbestos materials.

(k) "Friable asbestos material" means any material that contains more than 1 percent asbestos by weight and that can be crumbled, pulverized, or reduced to powder, when dry, by hand pressure.

(l) "Control device asbestos waste" means any asbestos-containing waste material that is collected in a pollution control device.

(m) "Renovation" means the removing or stripping of friable asbestos material used on any pipe, duct, boiler, tank, reactor, turbine, furnace, or structural member. Operations in which load-supporting structural members are wrecked or taken out are excluded.

(n) "Planned renovation" means a renovation operation, or a number of such operations, in which the amount of friable asbestos material that will be removed or stripped within a given period of time can be predicted. Operations that are individually non-scheduled are included, provided a number of such operations can be predicted to occur during a given period of time based on operating experience.

(o) "Emergency renovation" means a renovation operation that results from a sudden, unexpected event, and is not a planned renovation. Operations necessitated by non-routine failures of equipment are included.

(p) "Adequately wetted" means sufficiently mixed or coated with water or an aqueous solution to prevent dust emissions.

(q) "Removing" means taking out friable asbestos materials used on any pipe, duct, boiler, tank, reactor, turbine, furnace, or structural member from any building, structure, facility, or installation.

(r) "Stripping" means taking off friable asbestos materials from any pipe, duct, boiler, tank, reactor, turbine, furnace, or structural member.

(s) "Fabricating" means any processing of a manufactured product containing commercial asbestos, with the exception of processing at temporary sites for the construction or restoration of buildings, structures, facilities or installations.

(t) "Inactive waste disposal site" means any disposal site or portion thereof where additional asbestos-containing waste material will not be deposited and where the surface is not disturbed by vehicular traffic

(u) "Active waste disposal site" means any disposal site other than an inactive site.

(v) "Roadways" means surfaces on which motor vehicles travel including, but not limited to, highways, roads, streets, parking areas, and driveways.

(w) "Asbestos-containing waste material" means any waste which contains commercial asbestos and is generated by a source subject to the provisions of this subpart, including asbestos mill tailings, control device asbestos waste, friable asbestos waste material, and bags or containers that previously contained commercial asbestos.

(x) "Structural member" means any load-supporting member, such as beams and load supporting walls; or any non-load supporting member, such as ceilings and non-load-supporting walls.

[38 FR 8826, Apr. 6, 1973, as amended at 39 FR 15398, May 3, 1974, 40 FR 48299, Oct. 14, 1975, 42 FR 12127, Mar. 2, 1977, 43 FR 26373, June 19, 1978]

§ 61.22 Emission standard

(a) Asbestos mills. There shall be no visible emissions to the outside air from any asbestos mill except as provided in paragraph (f) of this section.

(b) Roadways. The surfacing of roadways with asbestos tailings or with asbestos-containing waste that is generated by any source subject to paragraphs (c), (d), (e) or (h) of this section is prohibited, except for temporary roadways on an area of asbestos ore deposits. The deposition of asbestos tailings or asbestos-containing waste on roadways covered with snow or ice is considered "surfacing."

(c) Manufacturing: There shall be no visible emissions to the outside air, except as provided in paragraph (f) of this section, from any of the following operations if they use commercial asbestos or from any building or structure in which such operations are conducted.

(1) The manufacture of cloth, cord, wicks, tubing, tape, twine, rope, thread, yarn, roving, lap, or other textile materials.

(2) The manufacture of cement products.

(3) The manufacture of fireproofing and insulating materials.

(4) The manufacture of friction products.

(5) The manufacture of paper, millboard, and felt.

(6) The manufacture of floor tile

(7) The manufacture of paints, coatings, caulks, adhesives, sealants.

(8) The manufacture of plastics and rubber materials.

(9) The manufacture of chlorine.

(10) The manufacture of shotgun shells.

(11) The manufacture of asphalt concrete

(d) Demolition and renovation. The requirements of this paragraph shall apply to any owner or operator of a demolition or renovation operation who intends to demolish any institutional, commercial, or industrial building (including apartment buildings having more than four dwelling units), structure, facility, installation, or portion thereof, which contains any pipe, duct, boiler, tank, reactor, turbine, furnace, or structural member that is cov

ered or coated with friable asbestos material, except as provided in paragraph (d)(1) of this section; or who intends to renovate any institutional, commercial, or industrial building, structure, facility, installation, or portion thereof where more than 80 meters (ca. 260 feet) of pipe covered or coated with friable asbestos material are stripped or removed, or more than 15 square meters (ca. 160 square feet) of friable asbestos material used to cover or coat any duct, boiler, tank, reactor, turbine, furnace, or structural member are stripped or removed.

(1)(i) The owner or operator of a demolition operation is exempted from the requirements of this paragraph: *Provided*, (A) the amount of friable asbestos material in the building or portion thereof to be demolished is less than 80 meters (ca. 260 feet) used to insulate pipes, and less than 15 square meters (ca. 160 square feet) used to insulate or fireproof any duct, boiler, tank, reactor, turbine, furnace, or structural member, and (B) the notification requirements of paragraph (d)(1)(ii) are met.

(ii) Written notification shall be postmarked or delivered to the Administrator at least 20 days prior to commencement of demolition and shall include the information required by paragraph (d)(2) of this section, with the exception of the information required by paragraphs (d)(2)(iii), (vi), (vii), (viii), and (ix), and shall state the measured or estimated amount of friable asbestos materials which is present. Techniques of estimation shall be explained.

(2) Written notice of intention to demolish or renovate shall be provided to the Administrator by the owner or operator of the demolition or renovation operation. Such notice shall be postmarked or delivered to the Administrator at least 10 days prior to commencement of demolition, or as early as possible prior to commencement of emergency demolition subject to paragraph (d)(6) of this section, and as early as possible prior to commencement of renovation. Such notice shall include the following information:

(i) Name of owner or operator.

(ii) Address of owner or operator.

(iii) Description of the building, structure, facility, or installation to be demolished or renovated, including the size, age, and prior use of the structure, and the approximate amount of friable asbestos materials present.

(iv) Address or location of the building, structure, facility, or installation.

(v) Scheduled starting and completion dates of demolition or renovation.

(vi) Nature of planned demolition or renovation and method(s) to be employed.

(vii) Procedures to be employed to meet the requirements of this paragraph and paragraph (j) of this section.

(viii) The name and address or location of the waste disposal site where the friable asbestos waste will be deposited.

(ix) Name, title, and authority of the State or local governmental representative who has ordered a demolition which is subject to paragraph (d)(6) of this section.

(3)(i) For purposes of determining whether a planned renovating operation constitutes a renovation within the meaning of this paragraph, the amount of friable asbestos material to be removed or stripped shall be:

(A) For planned renovating operations involving individually nonscheduled operations, the additive amount of friable asbestos material that can be predicted will be removed or stripped at a source over the maximum period of time for which a prediction can be made. The period shall be not less than 30 days and not longer than one year.

(B) For each planned renovating operation not covered by paragraph (d)(3)(i)(A), the total amount of friable asbestos material that can be predicted will be removed or stripped at a source.

(ii) For purposes of determining whether an emergency renovating operation constitutes a renovation within the meaning of this paragraph, the amount of friable asbestos material to be removed or stripped shall be the total amount of friable asbestos material that will be removed or stripped as a result of the sudden, unexpected

event that necessitated the renovation.

(4) The following procedures shall be used to prevent emissions of particulate asbestos material to outside air:

(i) Friable asbestos materials, used on any pipe, duct, boiler, tank, reactor, turbine, furnace, or structural member, shall be removed from any building, structure, facility or installation subject to this paragraph. Such removal shall occur before wrecking or dismantling of any portion of such building, structure, facility, or installation that would break up the friable asbestos materials and before wrecking or dismantling of any other portion of such building, structure, facility, or installation that would preclude access to such materials for subsequent removal. Removal of friable asbestos materials used on any pipe, duct, or structural member which are encased in concrete or other similar structural material is not required prior to demolition, but such material shall be adequately wetted whenever exposed during demolition.

(ii) Friable asbestos materials used on pipes, ducts, boilers, tanks, reactors, turbines, furnaces, or structural members shall be adequately wetted during stripping, except as provided in paragraphs (d)(4)(iv), (d)(4)(vi) or (d)(4)(vii) of this section.

(iii) Pipes, ducts, boilers, tanks, reactors, turbines, furnaces, or structural members that are covered or coated with friable asbestos materials may be taken out of any building, structure, facility, or installation subject to this paragraph as units or in sections provided the friable asbestos materials exposed during cutting or disjointing are adequately wetted during the cutting or disjointing operation. Such units shall not be dropped or thrown to the ground, but shall be carefully lowered to ground level.

(iv) The stripping of friable asbestos materials used on any pipe, duct, boiler, tank, reactor, turbine, furnace, or structural member that has been removed as a unit or in sections as provided in paragraph (d)(4)(iii) of this section shall be performed in accordance with paragraph (d)(4)(ii) of this section. Rather than comply with the wetting requirement, a local exhaust ventilation and collection system may be used to prevent emissions to the outside air. Such local exhaust ventilation systems shall be designed and operated to capture the asbestos particulate matter produced by the stripping of friable asbestos material. There shall be no visible emissions to the outside air from such local exhaust ventilation and collection systems except as provided in paragraph (f) of this section.

(v) All friable asbestos materials that have been removed or stripped shall be adequately wetted to ensure that such materials remain wet during all remaining stages of demolition or renovation and related handling operations. Such materials shall not be dropped or thrown to the ground or a lower floor. Such materials that have been removed or stripped more than 50 feet above ground level, except those materials removed as units or in sections, shall be transported to the ground via dust-tight chutes or containers.

(vi) Except as specified below, the wetting requirements of this paragraph are suspended when the temperature at the point of wetting is below 0°C (32°F). When friable asbestos materials are not wetted due to freezing temperatures, such materials on pipes, ducts, boilers, tanks, reactors, turbines, furnaces, or structural members shall, to the maximum extent possible, be removed as units or in sections prior to wrecking. In no case shall the requirements of paragraphs (d)(4)(iv) or (d)(4)(v) be suspended due to freezing temperatures.

(vii) For renovation operations, local exhaust ventilation and collection systems may be used, instead of wetting as specified in paragraph (d)(4)(ii), to prevent emissions of particulate asbestos material to outside air when damage to equipment resulting from the wetting would be unavoidable. Upon request and supply of adequate information, the Administrator will determine whether damage to equipment resulting from wetting to comply with the provisions of this paragraph would be unavoidable. Such local exhaust ventilation systems shall be designed and operated to capture the asbestos particulate matter produced by

the stripping and removal of friable asbestos material. There shall be no visible emissions to the outside air from such local exhaust ventilation and collection systems, except as provided in paragraph (f) of this section.

(5) Sources subject to this paragraph are exempt from the requirements of §§ 61.05(a), 61.07, and 61.09.

(6) The demolition of a building, structure, facility, or installation, pursuant to an order of an authorized representative of a State or local governmental agency, issued because that building is structurally unsound and in danger of imminent collapse is exempt from all but the following requirements of paragraph (d) of this section:

(i) The notification requirements specified by paragraph (d)(2) of this section;

(ii) The requirements on stripping of friable asbestos materials from previously removed units or sections as specified in paragraph (d)(4)(iv) of this section;

(iii) The wetting, as specified by paragraph (d)(4)(v) of this section, of friable asbestos materials that have been removed or stripped;

(iv) The portion of the structure being demolished that contains friable asbestos materials shall be adequately wetted during the wrecking operation.

(e) Spraying: There shall be no visible emissions to the outside air from the spray-on application of materials containing more than 1 percent asbestos, on a dry weight basis, used on equipment and machinery, except as provided in paragraph (f) of this section. Materials sprayed on buildings, structures, pipes, and conduits shall contain less than 1 percent asbestos on a dry weight basis.

(1) Sources subject to this paragraph are exempt from the requirements of § 61.05(a), § 61.07, and § 61.09.

(2) Any owner or operator who intends to spray asbestos materials which contain more than 1 percent asbestos on a dry weight basis, to insulate or fireproof equipment and machinery shall report such intention to the Administrator at least 20 days prior to the commencement of the spraying operation. Such report shall include the following information:

(i) Name of owner or operator.

(ii) Address of owner or operator.

(iii) Location of spraying operation.

(iv) Procedures to be followed to meet the requirements of this paragraph.

(3) The spray-on application of materials in which the asbestos fibers are encapsulated with a bituminous or resinous binder during spraying and which are not friable after drying is exempted from the requirements of paragraphs (e) and (e)(2) of this section.

(f) Rather than meet the no visible-emission requirements as specified by paragraphs (a), (c), (d), (e), (h), (j), and (k) of this section, an owner or operator may elect to use the methods specified by § 61.23 to clean emissions containing particulate asbestos material before such emissions escape to, or are vented to, the outside air.

(g) Where the presence of uncombined water is the sole reason for failure to meet the no-visible-emission requirement of paragraphs (a), (c), (d), (e), (h), (j), or (k) of this section, such failure shall not be a violation of such emission requirements.

(h) Fabricating: There shall be no visible emissions to the outside air, except as provided in paragraph (f) of this section, from any of the following operations if they use commercial asbestos or from any building or structure in which such operations are conducted.

(1) The fabrication of cement building products.

(2) The fabrication of friction products, except those operations that primarily install asbestos friction materials on motor vehicles.

(3) The fabrication of cement or silicate board for ventilation hoods, ovens, electrical panels; laboratory furniture; bulkheads, partitions and ceilings for marine construction; and flow control devices for the molten metal industry.

(i) Insulating. Molded insulating material, which are friable and wet applied insulating materials which are friable after drying, installed after the effective date of these regulations, shall contain no commercial asbestos. The provisions of this paragraph do not apply to insulating materials

which are spray applied; such materials are regulated under § 61.22(e).

(j) Waste disposal for manufacturing, fabricating, demolition, renovation and spraying operations: The owner or operator of any source covered under the provisions of paragraphs (c), (d), (e), or (h) of this section shall meet the following standards:

(1) There shall be no visible emissions to the outside air, except as provided in paragraph (j)(3) of this section, during the collection; processing, including incineration; packaging, transporting; or deposition of any asbestos-containing waste material which is generated by such source.

(2) All asbestos-containing waste material shall be deposited at waste disposal sites which are operated in accordance with the provisions of § 61.25.

(3) Rather than meet the requirement of paragraph (j)(1) of this section, an owner or operator may elect to use either of the disposal methods specified under (j)(3) (i) and (ii) of this section, or an alternative disposal method which has received prior approval by the Administrator:

(i) Treatment of asbestos-containing waste material with water:

(A) Control device asbestos waste shall be thoroughly mixed with water into a slurry and other asbestos-containing waste material shall be adequately wetted. There shall be no visible emissions to the outside air from the collection, mixing and wetting operations, except as provided in paragraph (f) of this section.

(B) After wetting, all asbestos-containing waste material shall be sealed into leak-tight containers while wet, and such containers shall be deposited at waste disposal sites which are operated in accordance with the provisions of § 61.25.

(C) The containers specified under paragraph (j)(3)(i)(B) of this section shall be labeled with a warning label that states:

CAUTION

Contains Asbestos

Avoid Opening or

Breaking Container

Breathing Asbestos is Hazardous

to Your Health

Alternatively, warning labels specified by Occupational Safety and Health Standards of the Department of Labor, Occupational Safety and Health Administration (OSHA) under 29 CFR 1910.93a(g)(2)(ii) may be used.

(ii) Processing of asbestos-containing waste material into non-friable forms

(A) All asbestos-containing waste material shall be formed into non friable pellets or other shapes and deposited at waste disposal sites which are operated in accordance with the provisions of § 61.25.

(B) There shall be no visible emissions to the outside air from the collection and processing of asbestos containing waste material, except as specified in paragraph (f) of this section.

(4) For the purposes of this paragraph (j), the term all asbestos-containing waste material as applied to demolition and renovation operations covered by paragraph (d) of this section includes only friable asbestos waste and control device asbestos waste.

(k) Waste disposal for asbestos mills: The owner or operator of any source covered under the provisions of paragraph (a) of this section shall meet the following standard:

(1) There shall be no visible emissions to the outside air, except as provided in paragraph (k)(3) of this section during the collection, processing, packaging, transporting or deposition of any asbestos containing waste material which is generated by such source.

(2) All asbestos containing waste material shall be deposited at waste disposal sites which are operated in accordance with the provisions of § 61.25.

(3) Rather than meet the requirement of paragraph (k)(1) of this section, an owner or operator may elect to meet the following requirements in paragraphs (k)(3) (i) and (ii), or use an alternative disposal method which has

received prior approval by the Administrator:

(i) There shall be no visible emissions to the outside air from the transfer of control device asbestos waste to the tailings conveyor, except as provided in paragraph (f) of this section. Such waste shall be subsequently processed either as specified in paragraph (k)(3)(ii) of this section or as specified in paragraph (j)(3) of this section.

(ii) All asbestos-containing waste material shall be adequately mixed, with a wetting agent recommended by the manufacturer of the agent to effectively wet dust and tailings, prior to deposition at a waste disposal site. Such agent shall be used as recommended for the particular dust by the manufacturer of the agent. There shall be no discharge of visible emissions to the outside air from the wetting operation except as specified in paragraph (f) of this section. Wetting may be suspended when the ambient temperature at the waste disposal site is less than −9.5° C (ca. 15° F). The ambient air temperature shall be determined by an appropriate measurement method with an accuracy of ±1° C (±2° F) and recorded at least at hourly intervals during the period that the operation of the wetting system is suspended. Records of such temperature measurements shall be retained at the source for a minimum of 2 years and made available for inspection by the Administrator.

(l) The owner of any inactive waste disposal site, which was operated by sources covered under § 61.22(a), (c) or (h) and where asbestos-containing waste material produced by such sources was deposited, shall meet the following standards:

(1) There shall be no visible emissions to the outside air from an inactive waste disposal site subject to this paragraph, except as provided in paragraph (l)(5) of this section.

(2) Warning signs shall be displayed at all entrances, and along the property line of the site or along the perimeter of the sections of the site where asbestos-containing waste material was deposited, at intervals of 100 m (ca. 330 ft) or less, except as specified in paragraph (l)(4) of this section. Signs shall be posted in such a manner and location that a person may easily read the legend. The warning signs required by this paragraph shall conform to the requirements of 20" x 14" upright format signs specified in 29 CFR 1910.145(d)(4) and this paragraph. The signs shall display the following legend in the lower panel, with letter sizes and styles of a visibility at least equal to those specified in this paragraph.

LEGEND

ASBESTOS WASTE DISPOSAL SITE

DO NOT CREATE DUST

Breathing Asbestos is Hazardous to Your Health

Notation

1" Sans Serif, Gothic or Block

¾" Sans Serif, Gothic or Block

14 Point Gothic

Spacing between lines shall be at least equal to the height of the upper of the two lines.

(3) The perimeter of the site shall be fenced in a manner adequate to deter access by the general public, except as specified in paragraph (l)(4) of this section.

(4) Warning signs and fencing are not required where the requirements of paragraphs (l)(5) (i) or (ii) of this section are met, or where a natural barrier adequately deters access by the general public. Upon request and supply of appropriate information, the Administrator will determine whether a fence or a natural barrier adequately deters access to the general public.

(5) Rather than meet the requirement of paragraph (l)(1) of this section, an owner may elect to meet the requirements of this paragraph or may use an alternative control method for emissions from inactive waste disposal sites which has received prior approval by the Administrator.

(i) The asbestos-containing waste material shall be covered with at least 15 centimeters (ca. 6 inches) of compacted non-asbestos-containing material, and a cover of vegetation shall be grown and maintained on the area

adequate to prevent exposure of the asbestos-containing waste material; or

(ii) The asbestos-containing waste material shall be covered with at least 60 centimeters (ca. 2 feet) of compacted non-asbestos-containing material and maintained to prevent exposure of the asbestos-containing waste; or

(iii) For inactive waste disposal sites for asbestos tailings, a resinous or petroleum-based dust suppression agent which effectively binds dust and controls wind erosion shall be applied. Such agent shall be used as recommended for the particular asbestos tailings by the dust suppression agent manufacturer. Other equally effective dust suppression agents may be used upon prior approval by the Administrator. For purposes of this paragraph, waste crankcase oil is not considered a dust suppression agent.

[38 FR 8826, Apr. 6, 1973, as amended at 39 FR 15398, May 3, 1974; 40 FR 48299, Oct. 14, 1975, 43 FR 26374, June 19, 1978]

§ 61.23 Air-cleaning.

If air-cleaning is elected, as permitted by §§ 61.22(f) and 61.22(d)(4)(iv), the requirements of this section must be met.

(a) Fabric filter collection devices must be used, except as noted in paragraphs (b) and (c) of this section. Such devices must be operated at a pressure drop of no more than 4 inches water gage, as measured across the filter fabric. The airflow permeability, as determined by ASTM method D737-69, must not exceed 30 $ft^3/min/ft^2$ for woven fabrics or 35 $ft^3/min/ft^2$ for felted fabrics, except that 40 $ft^3/min/ft^2$ for woven and 45 $ft^3/min/ft^2$ for felted fabrics is allowed for filtering air from asbestos ore dryers. Each square yard of felted fabric must weigh at least 14 ounces and be at least one-sixteenth inch thick throughout. Synthetic fabrics must not contain fill yarn other than that which is spun.

(b) If the use of fabric filters creates a fire or explosion hazard, the administrator may authorize the use of wet collectors designed to operate with a unit contacting energy of at least 40 inches water gage pressure.

(c) The administrator may authorize the use of filtering equipment other than that described in paragraphs (a) and (b) of this section if the owner or operator demonstrates to the satisfaction of the administrator that the filtering of particulate asbestos material is equivalent to that of the described equipment.

(d) All air-cleaning equipment authorized by this section must be properly installed, used, operated, and maintained. Bypass devices may be used only during upset or emergency conditions and then only for so long as it takes to shut down the operation generating the particulate asbestos material.

[38 FR 8826, Apr. 6, 1973, as amended at 40 FR 48302, Oct. 14, 1975]

§ 61.24 Reporting.

The owner or operator of any existing source to which this subpart is applicable shall, within 90 days after the effective date, provide the following information to the administrator:

(a) A description of the emission control equipment used for each process;

(b) If a fabric filter device is used to control emissions, the pressure drop across the fabric filter in inches water gage.

(1) If the fabric filter device utilizes a woven fabric, the airflow permeability in $ft^3/min/ft^2$ and, if the fabric is synthetic, indicate whether the fill yarn is spun or not spun.

(2) If the fabric filter device utilizes a felted fabric, the density in oz/yd^2, the minimum thickness in inches, and the airflow permeability in $ft^3/min/ft^2$.

(c) For sources subject to §§ 61.22(j) and 61.22(k):

(1) A brief description of each process that generates asbestos-containing waste material.

(2) The average weight of asbestos-containing waste material disposed of, measured in kg/day.

(3) The emission control methods used in all stages of waste disposal.

(4) The type of disposal site or operation site used for ultimate disposal, the name of the site operator, and the name and location of the disposal site.

(d) For sources subject to § 61.22(l):

(1) A brief description of the site

(2) The method or methods used to comply with the standard, or alternative procedures to be used.

(e) Such information shall accompany the information required by § 61.10. The information described in this section shall be reported using the format of Appendix A of this part.

(Sec. 114, Clean Air Act as amended (42 U.S.C. 7414))

[38 FR 8826, Apr. 6, 1973, as amended at 40 FR 48302, Oct. 14, 1975, 43 FR 8800, Mar. 3, 1978]

§ 61.25 Waste disposal sites.

In order to be an acceptable site for disposal of asbestos-containing waste material under § 61.22(j) and (k), an active waste disposal site shall meet the requirements of this section.

(a) There shall be no visible emissions to the outside air from any active waste disposal site where asbestos-containing waste material has been deposited, except as provided in paragraph (e) of this section.

(b) Warning signs shall be displayed at all entrances, and along the property line of the site or along the perimeter of the sections of the site where asbestos-containing waste material is deposited, at intervals of 100 m (ca. 330 ft) or less except as specified in paragraph (d) of this section. Signs shall be posted in such a manner and location that a person may easily read the legend. The warning signs required by this paragraph shall conform to the requirements of 20" × 14" upright format signs specified in 29 CFR 1910.145(d)(4) and this paragraph. The signs shall display the following legend in the lower panel, with letter sizes and styles of a visibility at least equal to those specified in this paragraph.

LEGEND

ASBESTOS WASTE DISPOSAL SITE

Do Not Create Dust

Breathing Asbestos is Hazardous to Your Health

Notation

1" Sans Serif, Gothic or Block

¾" Sans Serif, Gothic or Block

14 Point Gothic

Spacing between lines shall be at least equal to the height of the upper of the two lines.

(c) The perimeter of the disposal site shall be fenced in order to adequately deter access to the general public except as specified in paragraph (d) of this section.

(d) Warning signs and fencing are not required where the requirements of paragraph (c)(1) of this section are met, or where a natural barrier adequately deters access to the general public. Upon request and supply of appropriate information, the Administrator will determine whether a fence or a natural barrier adequately deters access to the general public.

(e) Rather than meet the requirement of paragraph (a) of this section, an owner or operator may elect to meet the requirements of paragraph (e)(1) or (e)(2) of this section, or may use an alternative control method for emissions from active waste disposal sites which has received prior approval by the Administrator.

(1) At the end of each operating day, or at least once every 24-hour period while the site is in continuous operation, the asbestos-containing waste material which was deposited at the site during the operating day or previous 24-hour period shall be covered with at least 15 centimeters (ca. 6 inches) of compacted non-asbestos-containing material.

(2) At the end of each operating day, or at least once every 24-hour period while the disposal site is in continuous operation, the asbestos-containing waste material which was deposited at the site during the operating day or previous 24-hour period shall be covered with a resinous or petroleum-

based dust suppression agent which effectively binds dust and controls wind erosion. Such agent shall be used as recommended for the particular dust by the dust suppression agent manufacturer. Other equally effective dust suppression agents may be used upon prior approval by the Administrator. For purposes of this paragraph, waste crankcase oil is not considered a dust suppression agent.

[40 FR 48302, Oct. 14, 1975]

B. HAZARDOUS WASTE

PART 260

HAZARDOUS WASTE MANAGEMENT
SYSTEM: GENERAL
40 CFR 260

6060A

days at 20° C, with a volatile solids reduction of at least 38 percent.

Air Drying: Liquid sludge is allowed to drain and/or dry on under-drained sand beds, or paved or unpaved basins in which the sludge is at a depth of nine inches. A minimum of three months is needed, two months of which temperatures average on a daily basis above 0° C.

Anaerobic digestion: The process is conducted in the absence of air at residence times ranging from 60 days at 20° C to 15 days at 35° to 55° C, with a volatile solids reduction of at least 38 percent.

Composting: Using the within-vessel, static aerated pile or windrow composting methods, the solid waste is maintained at minimum operating conditions of 40° C for 5 days. For four hours during this period the temperature exceeds 55° C.

Lime Stabilization: Sufficient lime is added to produce a pH of 12 after 2 hours of contact.

Other methods: Other methods or operating conditions may be acceptable if pathogens and vector attraction of the waste (volatile solids) are reduced to an extent equivalent to the reduction achieved by any of the above methods.

B. Processes to Further Reduce Pathogens

Composting: Using the within-vessel composting method, the solid waste is maintained at operating conditions of 55° C or greater for three days. Using the static aerated pile composting method, the solid waste is maintained at operating conditions of 55° C or greater for three days. Using the windrow composting method, the solid waste attains a temperature of 55° C or greater for at least 15 days during the composting period. Also, during the high temperature period, there will be a minimum of five turnings of the windrow.

Heat drying: Dewatered sludge cake is dried by direct or indirect contact with hot gases, and moisture content is reduced to 10 percent or lower. Sludge particles reach temperatures well in excess of 80° C, or the wet bulb temperature of the gas stream in contact with the sludge at the point where it leaves the dryer is in excess of 80° C.

Heat treatment: Liquid sludge is heated to temperatures of 180° C for 30 minutes.

Thermophilic Aerobic Digestion: Liquid sludge is agitated with air or oxygen to maintain aerobic conditions at residence times of 10 days at 55–60° C, with a volatile solids reduction of at least 38 percent.

Other methods: Other methods or operating conditions may be acceptable if pathogens and vector attraction of the waste (volatile solids) are reduced to an extent equivalent to the reduction achieved by any of the above methods.

Any of the processes listed below, if added to the processes described in Section A above, further reduce pathogens. Because the processes listed below, on their own, do not reduce the attraction of disease vectors, they are only add-on in nature.

Beta ray irradiation: Sludge is irradiated with beta rays from an accelerator at dosages of at least 1.0 megarad at room temperature (ca. 20° C).

Gamma ray irradiation: Sludge is irradiated with gamma rays from certain isotopes, such as ^{60}Cobalt and ^{137}Cesium, at dosages of at least 1.0 megarad at room temperature (ca. 20° C).

Pasteurization: Sludge is maintained for at least 30 minutes at a minimum temperature of 70° C.

Other methods: Other methods or operating conditions may be acceptable if pathogens are reduced to an extent equivalent to the reduction achieved by any of the above add-on methods.

PART 260—HAZARDOUS WASTE MANAGEMENT SYSTEM: GENERAL

Subpart A—General

Sec.
260.1 Purpose, scope, and applicability.
260.2 Availability of information; confidentiality of information.
260.3 Use of number and gender.

Subpart B—Definitions

260.10 Definitions.
260.11 References.

Subpart C—Rulemaking Petitions

260.20 General.
260.21 Petitions for equivalent testing or analytical methods.
260.22 Petitions to amend Part 261 to exclude a waste produced at a particular facility.
260.30 Variances from classification as a solid waste.
260.31 Standards and criteria for variances from classification as a solid waste.
260.32 Variances to be classified as a boiler.
260.33 Procedures for variances from classification as a solid waste or to be classified as a boiler.
260.40 Additional regulation of certain hazardous waste recycling activities on a case-by-case basis.
260.41 Procedures for case-by-case regulation of hazardous waste recycling activites.

APPENDIX I—OVERVIEW OF SUBTITLE C REGULATIONS

AUTHORITY: Secs. 1006, 2002, 3001 through 3007, 3010, and 7004, Solid Waste Disposal Act, as amended by the Resource Conservation and Recovery Act of 1976, as amended, 42 U.S.C. 6905, 6912, 6921 through 6927, 6930, and 6974.

SOURCE: 45 FR 33073, May 19, 1980, unless otherwise noted.

EDITORIAL NOTE: The reporting or recordkeeping provisions included in the final rule published at 47 FR 32274, July 26, 1982, will be submitted for approval to the Office of Management and Budget (OMB). They are not effective until OMB approval has been obtained. EPA will publish a notice of the effective date of the reporting and recordkeeping provisions of this rule after it obtains OMB approval.

Subpart A—General

§ 260.1 Purpose, scope, and applicability.

(a) This part provides definitions of terms, general standards, and overview information applicable to Parts 260 through 265 of this chapter.

(b) In this part: (1) Section 260.2 sets forth the rules that EPA will use in making information it receives available to the public and sets forth the requirements that generators, transporters, or owners or operators of treatment, storage, or disposal facilities must follow to assert claims of business confidentiality with respect to information that is submitted to EPA under Parts 260 through 265 of this chapter.

(2) Section 260.3 establishes rules of grammatical construction for Parts 260 through 265 of this chapter.

(3) Section 260.10 defines terms which are used in Parts 260 through 265 of this chapter.

(4) Section 260.20 establishes procedures for petitioning EPA to amend, modify, or revoke any provision of Parts 260 through 265 of this chapter and establishes procedures governing EPA's action on such petitions.

(5) Section 260.21 establishes procedures for petitioning EPA to approve testing methods as equivalent to those prescribed in Parts 261, 264, or 265 of this chapter.

(6) Section 260.22 establishes procedures for petitioning EPA to amend Subpart D of Part 261 to exclude a waste from a particular facility.

§ 260.2 Availability of information; confidentiality of information.

(a) Any information provided to EPA under Parts 260 through 265 of this chapter will be made available to the public to the extent and in the manner authorized by the Freedom of Information Act, 5 U.S.C. section 552, section 3007(b) of RCRA and EPA regulations implementing the Freedom of Information Act and section 3007(b), Part 2 of this chapter, as applicable.

(b) Any person who submits information to EPA in accordance with Parts 260 through 265 of this chapter may assert a claim of business confidentiality covering part or all of that information by following the procedures set forth in § 2.203(b) of this chapter. Information covered by such a claim will be disclosed by EPA only to the extent, and by means of the procedures, set forth in Part 2, Subpart B of this chapter. However, if no such claim accompanies the information when it is received by EPA, it may be made available to the public without further notice to the person submitting it.

§ 260.3 Use of number and gender.

As used in Parts 260 through 265 of this chapter:

(a) Words in the masculine gender also include the feminine and neuter genders; and

(b) Words in the singular include the plural; and

(c) Words in the plural include the singular.

Subpart B—Definitions

§ 260.10 Definitions.

When used in Parts 260 through 265 of this chapter, the following terms have the meanings given below:

"Act" or "RCRA" means the Solid Waste Disposal Act, as amended by the Resource Conservation and Recovery Act of 1976, as amended, 42 U.S.C. section 6901 et seq.

"Active portion" means that portion of a facility where treatment, storage, or disposal operations are being or have been conducted after the effective date of Part 261 of this chapter and which is not a closed portion. (See

also "closed portion" and "inactive portion".)

"Administrator" means the Administrator of the Environmental Protection Agency, or his designee.

"Aquifer" means a geologic formation, group of formations, or part of a formation capable of yielding a significant amount of ground water to wells or springs.

"Authorized representative" means the person responsible for the overall operation of a facility or an operational unit (i.e., part of a facility), e.g., the plant manager, superintendent or person of equivalent responsibility.

"Boiler" means an enclosed device using controlled flame combustion and having the following characteristics:

(1)(i) The unit must have physical provisions for recovering and exporting thermal energy in the form of steam, heated fluids, or heated gases; and

(ii) The unit's combustion chamber and primary energy recovery sections(s) must be of integral design. To be of integral design, the combustion chamber and the primary energy recovery section(s) (such as waterwalls and superheaters) must be physically formed into one manufactured or assembled unit. A unit in which the combustion chamber and the primary energy recovery section(s) are joined only by ducts or connections carrying flue gas is not integrally designed; however, secondary energy recovery equipment (such as economizers or air preheaters) need not be physically formed into the same unit as the combustion chamber and the primary energy recovery section. The following units are not precluded from being boilers solely because they are not of integral design: process heaters (units that transfer energy directly to a process stream), and fluidized bed combustion units; and

(iii) While in operation, the unit must maintain a thermal energy recovery efficiency of at least 60 percent, calculated in terms of the recovered energy compared with the thermal value of the fuel; and

(iv) The unit must export and utilize at least 75 percent of the recovered energy, calculated on an annual basis. In this calculation, no credit shall be given for recovered heat used internally in the same unit. (Examples of internal use are the preheating of fuel or combustion air, and the driving of induced or forced draft fans or feedwater pumps); or

(2) The unit is one which the Regional Administrator has determined, on a case-by-case basis, to be a boiler, after considering the standards in § 260.32.

"Certification" means a statement of professional opinion based upon knowledge and belief.

"Closed portion" means that portion of a facility which an owner or operator has closed in accordance with the approved facility closure plan and all applicable closure requirements. (See also "active portion" and "inactive portion".)

"Confined aquifer" means an aquifer bounded above and below by impermeable beds or by beds of distinctly lower permeability than that of the aquifer itself; an aquifer containing confined ground water.

"Container" means any portable device in which a material is stored, transported, treated, disposed of, or otherwise handled.

"Contingency plan" means a document setting out an organized, planned, and coordinated course of action to be followed in case of a fire, explosion, or release of hazardous waste or hazardous waste constituents which could threaten human health or the environment.

"Designated facility" means a hazardous waste treatment, storage, or disposal facility which has received an EPA permit (or a facility with interim status) in accordance with the requirements of Parts 270 and 124 of this chapter, a permit from a State authorized in accordance with Part 271 of this chapter, or that is regulated under § 261.6(c)(2) or Subpart F of Part 266 of this chapter, and that has been designated on the manifest by the generator pursuant to § 262.20.

"Dike" means an embankment or ridge of either natural or man-made materials used to prevent the movement of liquids, sludges, solids, or other materials.

"Discharge" or "hazardous waste discharge" means the accidental or in-

tentional spilling, leaking, pumping, pouring, emitting, emptying, or dumping of hazardous waste into or on any land or water.

"Disposal" means the discharge, deposit, injection, dumping, spilling, leaking, or placing of any solid waste or hazardous waste into or on any land or water so that such solid waste or hazardous waste or any constituent thereof may enter the environment or be emitted into the air or discharged into any waters, including ground waters.

"Disposal facility" means a facility or part of a facility at which hazardous waste is intentionally placed into or on any land or water, and at which waste will remain after closure.

"Elementary neutralization unit" means a device which:

(1) Is used for neutralizing wastes which are hazardous wastes only because they exhibit the corrosivity characteristic defined in § 261.22 of this chapter, or are listed in Subpart D of Part 261 of this chapter only for this reason; and,

(2) Meets the definition of tank, container, transport vehicle, or vessel in § 260.10 of this chapter.

"EPA hazardous waste number" means the number assigned by EPA to each hazardous waste listed in Part 261, Subpart D, of this chapter and to each characteristic identified in Part 261, Subpart C, of this chapter.

"EPA identification number" means the number assigned by EPA to each generator, transporter, and treatment, storage, or disposal facility.

"EPA region" means the states and territories found in any one of the following ten regions:

Region I—Maine, Vermont, New Hampshire, Massachusetts, Connecticut, and Rhode Island.

Region II—New York, New Jersey, Commonwealth of Puerto Rico, and the U.S. Virgin Islands.

Region III—Pennsylvania, Delaware, Maryland, West Virginia, Virginia, and the District of Columbia.

Region IV—Kentucky, Tennessee, North Carolina, Mississippi, Alabama, Georgia, South Carolina, and Florida.

Region V—Minnesota, Wisconsin, Illinois, Michigan, Indiana and Ohio.

Region VI—New Mexico, Oklahoma, Arkansas, Louisiana, and Texas.

Region VII—Nebraska, Kansas, Missouri, and Iowa.

Region VIII—Montana, Wyoming, North Dakota, South Dakota, Utah, and Colorado.

Region IX—California, Nevada, Arizona, Hawaii, Guam, American Samoa, Commonwealth of the Northern Mariana Islands.

Region X—Washington, Oregon, Idaho, and Alaska.

"Equivalent method" means any testing or analytical method approved by the Administrator under §§ 260.20 and 260.21.

"Existing hazardous waste management (HWM) facility" or "existing facility" means a facility which was in operation or for which construction commenced on or before November 19, 1980. A facility has commenced construction if:

(1) The owner or operator has obtained the Federal, State and local approvals or permits necessary to begin physical construction; and either

(2)(i) A continuous on-site, physical construction program has begun; or

(ii) The owner or operator has entered into contractual obligations—which cannot be cancelled or modified without substantial loss—for physical construction of the facility to be completed within a reasonable time.

"Existing portion" means that land surface area of an existing waste management unit, included in the original Part A permit application, on which wastes have been placed prior to the issuance of a permit.

"Facility" means all contiguous land, and structures, other appurtenances, and improvements on the land, used for treating, storing, or disposing of hazardous waste. A facility may consist of several treatment, storage, or disposal operational units (e.g., one or more landfills, surface impoundments, or combinations of them).

"Federal agency" means any department, agency, or other instrumentality of the Federal Government, any independent agency or establishment of the Federal Government including any Government corporation, and the Government Printing Office.

"Federal, State and local approvals or permits necessary to begin physical construction" means permits and ap-

provals required under Federal, State or local hazardous waste control statutes, regulations or ordinances.

"Food-chain crops" means tobacco, crops grown for human consumption, and crops grown for feed for animals whose products are consumed by humans.

"Free liquids" means liquids which readily separate from the solid portion of a waste under ambient temperature and pressure.

"Freeboard" means the vertical distance between the top of a tank or surface impoundment dike, and the surface of the waste contained therein.

"Generator" means any person, by site, whose act or process produces hazardous waste identified or listed in Part 261 of this chapter or whose act first causes a hazardous waste to become subject to regulation.

"Ground water" means water below the land surface in a zone of saturation.

"Hazardous waste" means a hazardous waste as defined in § 261.3 of this chapter.

"Hazardous waste constituent" means a constituent that caused the Administrator to list the hazardous waste in Part 261, Subpart D, of this chapter, or a constituent listed in Table 1 of § 261.24 of this chapter.

"In operation" refers to a facility which is treating, storing, or disposing of hazardous waste.

"Inactive portion" means that portion of a facility which is not operated after the effective date of Part 261 of this chapter. (See also "active portion" and "closed portion".)

"Incinerator" means any enclosed device using controlled flame combustion that neither meets the criteria for classification as a boiler nor is listed as an industrial furnace.

"Incompatible waste" means a hazardous waste which is unsuitable for:

(1) Placement in a particular device or facility because it may cause corrosion or decay of containment materials (e.g., container inner liners or tank walls); or

(2) Commingling with another waste or material under uncontrolled conditions because the commingling might produce heat or pressure, fire or explosion, violent reaction, toxic dusts, mists, fumes, or gases, or flammable fumes or gases.

(See Part 265, Appendix V, of this chapter for examples.)

"Individual generation site" means the contiguous site at or on which one or more hazardous wastes are generated. An individual generation site, such as a large manufacturing plant, may have one or more sources of hazardous waste but is considered a single or individual generation site if the site or property is contiguous.

"Industrial furnace" means any of the following enclosed devices that are integral components of manufacturing processes and that use controlled flame devices to accomplish recovery of materials or energy:

(1) Cement kilns

(2) Lime kilns

(3) Aggregate kilns

(4) Phosphate kilns

(5) Coke ovens

(6) Blast furnaces

(7) Smelting, melting and refining furnaces (including pyrometallurgical devices such as cupolas, reverberator furnaces, sintering machine, roasters, and foundry furnaces)

(8) Titanium dioxide chloride process oxidation reactors

(9) Methane reforming furnaces

(10) Pulping liquor recovery furnaces

(11) Combustion devices used in the recovery of sulfur values from spent sulfuric acid

(12) Such other devices as the Administrator may, after notice and comment, add to this list on the basis of one or more of the following factors:

(i) The design and use of the device primarily to accomplish recovery of material products;

(ii) The use of the device to burn or reduce raw materials to make a material product;

(iii) The use of the device to burn or reduce secondary materials as effective substitutes for raw materials, in processes using raw materials as principal feedstocks;

(iv) The use of the device to burn or reduce secondary materials as ingredients in an industrial process to make a material product;

(v) The use of the device in common industrial practice to produce a material product; and

(vi) Other factors, as appropriate.

"Injection well" means a well into which fluids are injected. (See also "underground injection".)

"Inner liner" means a continuous layer of material placed inside a tank or container which protects the construction materials of the tank or container from the contained waste or reagents used to treat the waste.

"International shipment" means the transportation of hazardous waste into or out of the jurisdiction of the United States.

"Landfill" means a disposal facility or part of a facility where hazardous waste is placed in or on land and which is not a land treatment facility, a surface impoundment, or an injection well.

"Landfill cell" means a discrete volume of a hazardous waste landfill which uses a liner to provide isolation of wastes from adjacent cells or wastes. Examples of landfill cells are trenches and pits.

"Land treatment facility" means a facility or part of a facility at which hazardous waste is applied onto or incorporated into the soil surface; such facilities are disposal facilities if the waste will remain after closure.

"Leachate" means any liquid, including any suspended components in the liquid, that has percolated through or drained from hazardous waste.

"Liner" means a continuous layer of natural or man-made materials, beneath or on the sides of a surface impoundment, landfill, or landfill cell, which restricts the downward or lateral escape of hazardous waste, hazardous waste constituents, or leachate.

"Management" or "hazardous waste management" means the systematic control of the collection, source separation, storage, transportation, processing, treatment, recovery, and disposal of hazardous waste.

"Manifest" means the shipping document EPA form 8700-22 and, if necessary, EPA form 8700-22A, originated and signed by the generator in accordance with the instructions included in the Appendix to Part 262.

"Manifest document number" means the U.S. EPA twelve digit identification number assigned to the generator plus a unique five digit document number assigned to the Manifest by the generator for recording and reporting purposes.

"Mining overburden returned to the mine site" means any material overlying an economic mineral deposit which is removed to gain access to that deposit and is then used for reclamation of a surface mine.

"Movement" means that hazardous waste transported to a facility in an individual vehicle.

"New hazardous waste management facility" or "new facility" means a facility which began operation, or for which construction commenced after October 21, 1976. (See also "Existing hazardous waste management facility".)

"On-site" means the same or geographically contiguous property which may be divided by public or private right-of-way, provided the entrance and exit between the properties is at a cross-roads intersection, and access is by crossing as opposed to going along, the right-of-way. Non-contiguous properties owned by the same person but connected by a right-of-way which he controls and to which the public does not have access, is also considered on-site property.

"Open burning" means the combustion of any material without the following characteristics:

(1) Control of combustion air to maintain adequate temperature for efficient combustion,

(2) Containment of the combustion-reaction in an enclosed device to provide sufficient residence time and mixing for complete combustion, and

(3) Control of emission of the gaseous combustion products.

(See also "incineration" and "thermal treatment".)

"Operator" means the person responsible for the overall operation of a facility.

"Owner" means the person who owns a facility or part of a facility.

"Partial closure" means the closure of a discrete part of a facility in accordance with the applicable closure requirements of Parts 264 or 265 of

this chapter. For example, partial closure may include the closure of a trench, a unit operation, a landfill cell, or a pit, while other parts of the same facility continue in operation or will be placed in operation in the future.

"Person" means an individual, trust, firm, joint stock company, Federal Agency, corporation (including a government corporation), partnership, association, State, municipality, commission, political subdivision of a State, or any interstate body.

"Personnel" or "facility personnel" means all persons who work, at, or oversee the operations of, a hazardous waste facility, and whose actions or failure to act may result in noncompliance with the requirements of Parts 264 or 265 of this chapter.

"Pile" means any non-containerized accumulation of solid, nonflowing hazardous waste that is used for treatment or storage.

"Point source" means any discernible, confined, and discrete conveyance, including, but not limited to any pipe, ditch, channel, tunnel, conduit, well, discrete fissure, container, rolling stock, concentrated animal feeding operation, or vessel or other floating craft, from which pollutants are or may be discharged. This term does not include return flows from irrigated agriculture.

"Publicly owned treatment works" or "POTW" means any device or system used in the treatment (including recycling and reclamation) of municipal sewage or industrial wastes of a liquid nature which is owned by a "State" or "municipality" (as defined by Section 502(4) of the CWA). This definition includes sewers, pipes, or other conveyances only if they convey wastewater to a POTW providing treatment.

"Regional Administrator" means the Regional Administrator for the EPA Region in which the facility is located, or his designee.

"Representative sample" means a sample of a universe or whole (e.g., waste pile, lagoon, ground water) which can be expected to exhibit the average properties of the universe or whole.

"Run-off" means any rainwater, leachate, or other liquid that drains over land from any part of a facility.

"Run-on" means any rainwater, leachate, or other liquid that drains over land onto any part of a facility.

"Saturated zone" or "zone of saturation" means that part of the earth's crust in which all voids are filled with water.

"Sludge" means any solid, semi-solid, or liquid waste generated from a municipal, commercial, or industrial wastewater treatment plant, water supply treatment plant, or air pollution control facility exclusive of the treated effluent from a wastewater treatment plant.

"Solid waste" means a solid waste as defined in § 261.2 of this chapter.

"State" means any of the several States, the District of Columbia, the Commonwealth of Puerto Rico, the Virgin Islands, Guam, American Samoa, and the Commonwealth of the Northern Mariana Islands.

"Storage" means the holding of hazardous waste for a temporary period, at the end of which the hazardous waste is treated, disposed of, or stored elsewhere.

"Surface impoundment" or "impoundment" means a facility or part of a facility which is a natural topographic depression, man-made excavation, or diked area formed primarily of earthen materials (although it may be lined with man-made materials), which is designed to hold an accumulation of liquid wastes or wastes containing free liquids, and which is not an injection well. Examples of surface impoundments are holding, storage, settling, and aeration pits, ponds, and lagoons.

"Tank" means a stationary device, designed to contain an accumulation of hazardous waste which is constructed primarily of non-earthen materials (e.g., wood, concrete, steel, plastic) which provide structural support.

"Thermal treatment" means the treatment of hazardous waste in a device which uses elevated temperatures as the primary means to change the chemical, physical, or biological character or composition of the hazardous waste. Examples of thermal treatment processes are incineration,

molten salt, pyrolysis, calcination, wet air oxidation, and microwave discharge. (See also "incinerator" and "open burning".)

"Totally enclosed treatment facility" means a facility for the treatment of hazardous waste which is directly connected to an industrial production process and which is constructed and operated in a manner which prevents the release of any hazardous waste or any constituent thereof into the environment during treatment. An example is a pipe in which waste acid is neutralized.

"Transfer facility" means any transportation related facility including loading docks, parking areas, storage areas and other similar areas where shipments of hazardous waste are held during the normal course of transportation.

"Transport vehicle" means a motor vehicle or rail car used for the transportation of cargo by any mode. Each cargo-carrying body (trailer, railroad freight car, etc.) is a separate transport vehicle.

"Transportation" means the movement of hazardous waste by air, rail, highway, or water.

"Transporter" means a person engaged in the offsite transportation of hazardous waste by air, rail, highway, or water.

"Treatment" means any method, technique, or process, including neutralization, designed to change the physical, chemical, or biological character or composition of any hazardous waste so as to neutralize such waste, or so as to recover energy or material resources from the waste, or so as to render such waste non-hazardous, or less hazardous; safer to transport, store, or dispose of; or amenable for recovery, amenable for storage, or reduced in volume.

"Treatment zone" means a soil area of the unsaturated zone of a land treatment unit within which hazardous constituents are degraded, transformed, or immobilized.

"Underground injection" means the subsurface emplacement of fluids through a bored, drilled or driven well; or through a dug well, where the depth of the dug well is greater than the largest surface dimension. (See also "injection well".)

"Unsaturated zone" or "zone of aeration" means the zone between the land surface and the water table.

"United States" means the 50 States, the District of Columbia, the Commonwealth of Puerto Rico, the U.S. Virgin Islands, Guam, American Samoa, and the Commonwealth of the Northern Mariana Islands.

"Uppermost aquifer" means the geologic formation nearest the natural ground surface that is an aquifer, as well as lower aquifers that are hydraulically interconnected with this aquifer within the facility's property boundary.

"Vessel" includes every description of watercraft, used or capable of being used as a means of transportation on the water.

"Wastewater treatment unit" means a device which:

(1) Is part of a wastewater treatment facility which is subject to regulation under either Section 402 or Section 307(b) of the Clean Water Act; and

(2) Receives and treats or stores an influent wastewater which is a hazardous waste as defined in § 261.3 of this chapter, or generates and accumulates a wastewater treatment sludge which is a hazardous waste as defined in § 261.3 of this chapter, or treats or stores a wastewater treatment sludge which is a hazardous waste as defined in § 261.3 of this chapter; and

(3) Meets the definition of tank in § 260.10 of this chapter.

"Water (bulk shipment)" means the bulk transportation of hazardous waste which is loaded or carried on board a vessel without containers or labels.

"Well" means any shaft or pit dug or bored into the earth, generally of a cylindrical form, and often walled with bricks or tubing to prevent the earth from caving in.

"Well injection": (See "underground injection".)

[45 FR 33073, May 19, 1980, as amended at 45 FR 72028, Oct. 30, 1980; 45 FR 76075, Nov.17, 1980; 45 FR 76630, Nov. 19, 1980; 45 FR 86968, Dec. 31, 1980; 46 FR 2348, Jan. 9, 1981; 46 FR 27476, May 20, 1981; 47 FR 32349, July 26, 1982; 48 FR 2511, Jan. 16, 1983; 48 FR 14293, Apr. 1, 1983; 49 FR

10500, Mar. 20, 1984; 50 FR 661, Jan. 4, 1985]

EFFECTIVE DATE NOTE: At 50 FR 661, Jan. 4, 1985, § 260.10 was amended by adding the definitions for "Boiler" and "Industrial furnace" and revising the definitions for "Designated facility" and "Incinerator", effective July 5, 1985. For the convenience of the user, the superseded text is set out below.

§ 260.10 Definitions.

* * * * *

"Designated facility" means a hazardous waste treatment, storage, or disposal facility which has received an EPA permit (or a facility with interim status) in accordance with the requirements of 40 CFR Parts 270 and 124 of this chapter, or a permit from a State authorized in accordance with Part 271 of this chapter, that has been designated on the manifest by the generator pursuant to § 262.20.

* * * * *

"Incinerator" means an enclosed device using controlled flame combustion, the primary purpose of which is to thermally break down hazardous waste. Examples of incinerators are rotary kiln, fluidized bed, and liquid injection incinerators.

* * * * *

§ 260.11 References.

(a) When used in Parts 260 through 265 of this chapter, the following publications are incorporated by reference:

"ASTM Standard Test Methods for Flash Point of Liquids by Setaflash Closed Tester," ASTM Standard D-3278-78, available from American Society for Testing and Materials, 1916 Race Street, Philadelphia, Pa. 19103.

"ASTM Standard Test Methods for Flash Point by Pensky-Martens Closed Tester," ASTM Standard D-93-79 or D-93-80. D-93-80 is available from American Society for Testing and Materials, 1916 Race Street, Philadelphia, Pa. 19103.

"Flammable and Combustible Liquids Code" (1977 or 1981), available from the National Fire Protection Association, 470 Atlantic Avenue, Boston, Massachusetts 02210.

"Test Methods for Evaluating Solid Waste, Physical/Chemical Methods", EPA Publication SW-846 [Second Edition, 1982 as amended by Update I (April, 1984), and Update II (April, 1985)]. The second edition of SW-846 and Updates I and II are available from the Superintendent of Documents, U.S. Government Printing Office, Washington, D.C. 20401, (202) 783-3228, on a subscription basis.

(b) The references listed in paragraph (a) of this section are also available for inspection at the Office of the Federal Register, 1100 L Street, NW, Washington, D.C. 20408. These incorporations by reference were approved by the Director of the Federal Register. These materials are incorporated as they exist on the date of approval and a notice of any change in these materials will be published in the FEDERAL REGISTER.

[46 FR 35247, July 7, 1981, as amended at 50 FR 18374, Apr. 30, 1985]

Subpart C—Rulemaking Petitions

§ 260.20 General.

(a) Any person may petition the Administrator to modify or revoke any provision in Parts 260 through 265 of this chapter. This section sets forth general requirements which apply to all such petitions. Section 260.21 sets forth additional requirements for petitions to add a testing or analytical method to Part 261, 264 or 265. Section 260.22 sets forth additional requirements for petitions to exclude a waste at a particular facility from § 261.3 of this chapter or the lists of hazardous wastes in Subpart D of Part 261.

(b) Each petition must be submitted to the Administrator by certified mail and must include:

(1) The petitioner's name and address;

(2) A statement of the petitioner's interest in the proposed action;

(3) A description of the proposed action, including (where appropriate) suggested regulatory language; and

(4) A statement of the need and justification for the proposed action, including any supporting tests, studies, or other information.

(c) The Administrator will make a tentative decision to grant or deny a petition and will publish notice of

such tentative decision, either in the form of an advanced notice of proposed rulemaking, a proposed rule, or a tentative determination to deny the petition, in the FEDERAL REGISTER for written public comment.

(d) Upon the written request of any interested person, the Administrator may, at his discretion, hold an informal public hearing to consider oral comments on the tentative decision. A person requesting a hearing must state the issues to be raised and explain why written comments would not suffice to communicate the person's views. The Administrator may in any case decide on his own motion to hold an informal public hearing.

(e) After evaluating all public comments the Administrator will make a final decision by publishing in the FEDERAL REGISTER a regulatory amendment or a denial of the petition.

§ 260.21 Petitions for equivalent testing or analytical methods.

(a) Any person seeking to add a testing or analytical method to Part 261, 264, or 265 of this chapter may petition for a regulatory amendment under this section and § 260.20. To be successful, the person must demonstrate to the satisfaction of the Administrator that the proposed method is equal to or superior to the corresponding method prescribed in Part 261, 264, or 265 of this chapter, in terms of its sensitivity, accuracy, and precision (i.e., reproducibility).

(b) Each petition must include, in addition to the information required by § 260.20(b):

(1) A full description of the proposed method, including all procedural steps and equipment used in the method;

(2) A description of the types of wastes or waste matrices for which the proposed method may be used;

(3) Comparative results obtained from using the proposed method with those obtained from using the relevant or corresponding methods prescribed in Part 261, 264, or 265 of this chapter;

(4) An assessment of any factors which may interfere with, or limit the use of, the proposed method; and

(5) A description of the quality control procedures necessary to ensure the sensitivity, accuracy and precision of the proposed method.

(c) After receiving a petition for an equivalent method, the Administrator may request any additional information on the proposed method which he may reasonably require to evaluate the method.

(d) If the Administrator amends the regulations to permit use of a new testing method, the method will be incorporated in "Test Methods for the Evaluation of Solid Waste: Physical/Chemical Methods," SW-846, U.S. Environmental Protection Agency, Office of Solid Waste, Washington, D.C. 20460.

[45 FR 33073, May 19, 1980, as amended at 49 FR 47391, Dec. 4, 1984]

§ 260.22 Petitions to amend Part 261 to exclude a waste produced at a particular facility.

(a) Any person seeking to exclude a waste at a particular generating facility from the lists in Subpart D of Part 261 may petition for a regulatory amendment under this section and § 260.20. To be successful, the petitioner must demonstrate to the satisfaction of the Administrator that the waste produced by a particular generating facility does not meet any of the criteria under which the waste was listed as a hazardous waste and, in the case of an acutely hazardous waste listed under § 261.11(a)(2), that it also does not meet the criterion of § 261.11(a)(3). A waste which is so excluded may still, however, be a hazardous waste by operation of Subpart C of Part 261.

(b) The procedures in this section and § 260.20 may also be used to petition the Administrator for a regulatory amendment to exclude from § 261.3(a)(2)(ii) or (c), a waste which is described in those sections and is either a waste listed in Subpart D, contains a waste listed in Subpart D, or is derived from a waste listed in Subpart D. This exclusion may only be issued for a particular generating, storage, treatment, or disposal facility. The petitioner must make the same demonstration as required by paragraph (a) of this section, except that where the waste is a mixture of solid

waste and one or more listed hazardous wastes or is derived from one or more hazardous wastes, his demonstration may be made with respect to each constituent listed waste or the waste mixture as a whole. A waste which is so excluded may still be a hazardous waste by operation of Subpart C of Part 261.

(c) If the waste is listed with codes "I", "C", "R", or "E" in Subpart D, the petitioner must show that demonstration samples of the waste do not exhibit the relevant characteristic defined in §261.21, § 261.22, § 261.23, or § 261.24 using any applicable test methods prescribed therein.

(d) If the waste is listed with code "T" in Subpart D, the petitioner must demonstrate that:

(1) Demonstration samples of the waste do not contain the constituent (as defined in Appendix VII) that caused the Administrator to list the waste, using the appropriate test methods prescribed in Appendix III; or

(2) The waste does not meet the criterion of § 261.11(a)(3) when considering the factors in § 261.11(a)(3) (i) through (xi).

(e) If the waste is listed with the code "H" in Subpart D, the petitioner must demonstrate that the waste does not meet both of the following criteria:

(1) The criterion of § 261.11(a)(2).

(2) The criterion of § 261.11(a)(3) when considering the factors listed in § 261.11(a)(3) (i) through (xi).

(f) [Reserved for listing radioactive wastes.]

(g) [Reserved for listed infectious wastes.]

(h) Demonstration samples must consist of enough representative samples, but in no case less than four samples, taken over a period of time sufficient to represent the variability or the uniformity of the waste.

(i) Each petition must include, in addition to the information required by § 260.20(b):

(1) The name and address of the laboratory facility performing the sampling or tests of the waste;

(2) The names and qualifications of the persons sampling and testing the waste;

(3) The dates of sampling and testing;

(4) The location of the generating facility;

(5) A description of the manufacturing processes or other operations and feed materials producing the waste and an assessment of whether such processes, operations, or feed materials can or might produce a waste that is not covered by the demonstration;

(6) A description of the waste and an estimate of the average and maximum monthly and annual quantities of waste covered by the demonstration;

(7) Pertinent data on and discussion of the factors delineated in the respective criterion for listing a hazardous waste, where the demonstration is based on the factors in § 261.11(a)(3);

(8) A description of the methodologies and equipment used to obtain the representative samples;

(9) A description of the sample handling and preparation techniques, including techniques used for extraction, containerization and preservation of the samples;

(10) A description of the tests performed (including results);

(11) The names and model numbers of the instruments used in performing the tests; and

(12) The following statement signed by the generator of the waste or his authorized representative:

I certify under penalty of law that I have personally examined and am familiar with the information submitted in this demonstration and all attached documents, and that, based on my inquiry of those individuals immediately responsible for obtaining the information, I believe that the submitted information is true, accurate, and complete. I am aware that there are significant penalties for submitting false information, including the possibility of fine and imprisonment.

(j) After receiving a petition for an exclusion, the Administrator may request any additional information which he may reasonably require to evaluate the petition.

(k) An exclusion will only apply to the waste generated at the individual facility covered by the demonstration and will not apply to waste from any other facility.

(l) The Administrator may exclude only part of the waste for which the demonstration is submitted where he has reason to believe that variability of the waste justifies a partial exclusion.

(m) The Administrator may (but shall not be required to) grant a temporary exclusion before making a final decision under § 260.20(d) whenever he finds that there is a substantial likelihood that an exclusion will be finally granted. The Administrator will publish notice of any such temporary exclusion in the FEDERAL REGISTER.

EDITORIAL NOTE: For information on the availability of a guidance manual for petitions to delist hazardous wastes, see 50 FR 21607, May 28, 1985.

§ 260.30 Variances from classification as a solid waste.

In accordance with the standards and criteria in § 260.31 and the procedures in § 260.33, the Regional Administrator may determine on a case-by-case basis that the following recycled materials are not solid wastes:

(a) Materials that are accumulated speculatively without sufficient amounts being recycled (as defined in § 261.1(c)(8) of this chapter);

(b) Materials that are reclaimed and then reused within the original primary production process in which they were generated;

(c) Materials that have been reclaimed but must be reclaimed further before the materials are completely recovered.

[50 FR 661, Jan. 4, 1985; 50 FR 14219, Apr. 11, 1985]

EFFECTIVE DATE NOTE: At 50 FR 661, Jan. 4, 1985, § 260.30 was added, effective July 5, 1985.

§ 260.31 Standards and criteria for variances from classification as a solid waste.

(a) The Regional Administrator may grant requests for a variance from classifying as a solid waste those materials that are accumulated speculatively without sufficient amounts being recycled if the applicant demonstrates that sufficient amounts of the material will be recycled or transferred for recycling in the following year. If a variance is granted, it is valid only for the following year, but can be renewed, on an annual basis, by filing a new application. The Regional Administrator's decision will be based on the following standards and criteria:

(1) The manner in which the material is expected to be recycled, when the material is expected to be recycled, and whether this expected disposition is likely to occur (for example, because of past practice, market factors, the nature of the material, or contractual arrangements for recycling);

(2) The reason that the applicant has accumulated the material for one or more years without recycling 75 percent of the volume accumulated at the beginning of the year;

(3) The quantity of material already accumulated and the quantity expected to be generated and accumulated before the material is recycled;

(4) The extent to which the material is handled to minimize loss;

(5) Other relevant factors.

(b) The Regional Administrator may grant requests for a variance from classifying as a solid waste those materials that are reclaimed and then reused as feedstock within the original primary production process in which the materials were generated if the reclamation operation is an essential part of the production process. This determination will be based on the following criteria:

(1) How economically viable the production process would be if it were to use virgin materials, rather than reclaimed materials;

(2) The prevalence of the practice on an industry-wide basis;

(3) The extent to which the material is handled before reclamation to minimize loss;

(4) The time periods between generating the material and its reclamation, and between reclamation and return to the original primary production process;

(5) The location of the reclamation operation in relation to the production process;

(6) Whether the reclaimed material is used for the purpose for which it was originally produced when it is returned to the original process, and whether it is returned to the process in substantially its original form;

(7) Whether the person who generates the material also reclaims it.

(8) Other relevant factors.

(c) The Regional Administrator may grant requests for a variance from classifying as a solid waste those materials that have been reclaimed but must be reclaimed further before recovery is completed if, after initial reclamation, the resulting material is commodity-like (even though it is not yet a commercial product, and has to be reclaimed further). This determination will be based on the following factors:

(1) The degree of processing the material has undergone and the degree of further processing that is required;

(2) The value of the material after it has been reclaimed;

(3) The degree to which the reclaimed material is like an analogous raw material;

(4) The extent to which an end market for the reclaimed material is guaranteed;

(5) The extent to which the reclaimed material is handled to minimize loss;

(6) Other relevant factors.

[50 FR 662, Jan. 4, 1985]

EFFECTIVE DATE NOTE: At 50 FR 662, Jan. 4, 1985, § 260.31 was added, effective July 5, 1985.

§ 260.32 Variance to be classified as a boiler.

In accordance with the standards and criteria in § 260.10 (definition of "boiler"), and the procedures in § 260.33, the Regional Administrator may determine on a case-by-case basis that certain enclosed devices using controlled flame combustion are boilers, even though they do not otherwise meet the definition of boiler contained in § 260.10, after considering the following criteria:

(a) The extent to which the unit has provisions for recovering and exporting thermal energy in the form of steam, heated fluids, or heated gases; and

(b) The extent to which the combustion chamber and energy recovery equipment are of integral design; and

(c) The efficiency of energy recovery, calculated in terms of the recovered energy compared with the thermal value of the fuel, and

(d) The extent to which exported energy is utilized; and

(e) The extent to which the device is in common and customary use as a "boiler" functioning primarily to produce steam, heated fluids, or heated gases; and

(f) Other factors, as appropriate.

[50 FR 662, Jan. 4, 1985]

EFFECTIVE DATE NOTE: At 50 FR 662, Jan 4, 1985, § 260.32 was added, effective July 5, 1985.

§ 260.33 Procedures for variances from classification as a solid waste or to be classified as a boiler.

The Regional Administrator will use the following procedures in evaluating applications for variances from classification as a solid waste or applications to classify particular enclosed flame combustion devices as boilers:

(a) The applicant must apply to the Regional Administrator in the region where the recycler is located. The application must address the relevant criteria contained in § 260.31 or § 260.32 of this part.

(b) The Regional Administrator will evaluate the application and issue a draft notice tentatively granting or denying the application. Notification of this tentative decision will be provided by newspaper advertisement and radio broadcast in the locality where the recycler is located. The Regional Administrator will accept comment on the tentative decision for 30 days, and may also hold a public hearing upon request or at his discretion. The Regional Administrator will issue a final decision after receipt of comments and after the hearing (if any), and this decision may not be appealed to the Administrator.

[50 FR 662, Jan. 4, 1985]

EFFECTIVE DATE NOTE: At 50 FR 662, Jan 4, 1985, § 260.33 was added, effective July 5 1985.

§ 260.40 Additional regulation of certain hazardous waste recycling activities on a case-by-case basis.

(a) The Regional Administrator may decide on a case-by-case basis that persons accumulating or storing the recy-

clable materials described in § 261.6(a)(2)(iv) of this chapter should be regulated under § 261.6 (b) and (c) of this chapter. The basis for this decision is that the materials are being accumulated or stored in a manner that does not protect human health and the environment because the materials or their toxic constituents have not been adequately contained, or because the materials being accumulated or stored together are incompatible. In making this decision, the Regional Administrator will consider the following factors:

(1) The types of materials accumulated or stored and the amounts accumulated or stored;

(2) The method of accumulation or storage;

(3) The length of time the materials have been accumulated or stored before being reclaimed;

(4) Whether any contaminants are being released into the environment, or are likely to be so released; and

(5) Other relevant factors.

The procedures for this decision are set forth in § 260.41 of this chapter.

[50 FR 662, Jan. 4, 1985]

EFFECTIVE DATE NOTE: At 50 FR 662, Jan. 4, 1985, § 260.40 was added, effective July 5, 1985.

§ 260.41 Procedures for case-by-case regulation of hazardous waste recycling activities.

The Regional Administrator will use the following procedures when determining whether to regulate hazardous waste recycling activities described in § 261.6(a)(2)(iv) under the provisions of § 261.6 (b) and (c), rather than under the provisions of Subpart F of Part 266 of this chapter.

(a) If a generator is accumulating the waste, the Regional Administrator will issue a notice setting forth the factual basis for the decision and stating that the person must comply with the applicable requirements of Subparts A, C, D, and E of Part 262 of this chapter. The notice will become final within 30 days, unless the person served requests a public hearing to challenge the decision. Upon receiving such a request, the Regional Administrator will hold a public hearing. The Regional Administrator will provide notice of the hearing to the public and allow public participation at the hearing. The Regional Administrator will issue a final order after the hearing stating whether or not compliance with Part 262 is required. The order becomes effective 30 days after service of the decision unless the Regional Administrator specifies a later date or unless review by the Administrator is requested. The order may be appealed to the Administrator by any person who participated in the public hearing. The Administrator may choose to grant or to deny the appeal. Final Agency action occurs when a final order is issued and Agency review procedures are exhausted.

(b) If the person is accumulating the recyclable material as a storage facility, the notice will state that the person must obtain a permit in accordance with all applicable provisions of Parts 270 and 124 of this chapter. The owner or operator of the facility must apply for a permit within no less than 60 days and no more than six months of notice, as specified in the notice. If the owner or operator of the facility wishes to challenge the Regional Administrator's decision, he may do so in his permit application, in a public hearing held on the draft permit, or in comments filed on the draft permit or on the notice of intent to deny the permit. The fact sheet accompanying the permit will specify the reasons for the Agency's determination. The question of whether the Regional Administrator's decision was proper will remain open for consideration during the public comment period discussed under § 124.11 of this chapter and in any subsequent hearing.

[50 FR 663, Jan. 4, 1985]

EFFECTIVE DATE NOTE: At 50 FR 663, Jan 4, 1985, § 260.41 was added, effective July 5, 1985.

APPENDIX I—OVERVIEW OF SUBTITLE C REGULATIONS

The Agency believes that there are many people who suspect, but are not sure, that their activities are subject to control under the RCRA Subtitle C rules. This appendix is written for these people. It is designed to help those who are unfamiliar with the hazardous waste control program determine

with which, if any, of the regulations they should comply.

Definition of Solid Waste

The first question which such a person should ask himself is: "Is the material I handle a solid waste?" If the answer to this question is "No", then the material is not subject to control under RCRA and, therefore, the person need not worry about whether he should comply with the Subtitle C rules.

Section 261.2 of this chapter provides a definition of "solid waste" which expands the statutory definition of that term given in section 1004(27) of RCRA. This definition is diagrammed in Figure 1 below.

Figure 1 explains that all materials are either: (1) Garbage refuse, or sludge; (2) solid, liquid, semi-solid or contained gaseous material; or (3) something else. No materials in the third category are solid waste. All materials in the first category are solid waste. Materials in the second category are solid waste unless they are one of the five exclusions specified in § 261.4(a).

Definition of Hazardous Waste

If a person has determined that his material is a "solid waste", the next question he should ask is: "Is the solid waste I handle a hazardous waste?"

Hazardous waste is defined in § 261.3 of this chapter. Section 261.3 provides that, in general, a solid waste is a hazardous waste if: (1) It is, or contains, a hazardous waste listed in Subpart D of Part 261 of this chapter, or (2) the waste exhibits any of the characteristics defined in Subpart C of Part 261. However, Parts 260 and 261 also contain provisions which exclude (§§ 261.4(b), 260.20, and 260.22) certain solid wastes from the definition of "hazardous waste", even though they are listed in Subpart D or exhibit one or more of the characteristics defined in Subpart C. Figure 2 depicts the interplay of these special provisions with the definition of "hazardous waste". It presents a series of questions which a person should ask himself concerning his waste. After doing so, the person should be able to determine if the solid waste he handles is a hazardous waste.

Hazardous Waste Regulations

If this is the case, the person should look at Figure 3. Figure 3 depicts the special provisions specified in the final Part 261 rules for hazardous waste which:

1. Is generated by a small quantity generator.
2. Is or is intended to be legitimately and beneficially used, re-used, recycled, or reclaimed.
3. Is a sludge, is listed in Part 261, Subpart D, or is a mixture containing a waste listed in Part 261, Subpart D.

For each of these Groups, Figure 3 indicates with which Subtitle C regulations (if any) the person handling these wastes must comply. Figure 3 also explains that, if a person handles hazardous waste which is not included in any one of the above three categories, his waste is subject to the Subtitle C regulations diagrammed in Figure 4.

Figure 4 is a flowchart which identifies the three categories of activities regulated under the Subtitle C rules, and the corresponding set of rules with which people in each of these categories must comply. It points out that all people who handle hazardous waste are either: (1) Generators of hazardous waste, (2) transporters of hazardous waste, (3) owners or operators of hazardous waste treatment, storage, or disposal facilities, or (4) a combination of the above. Figure 4 indicates that all of these people must notify EPA of their hazardous waste activities in accordance with the Section 3010 Notification Procedures (see 45 FR 12746 *et seq.*), and obtain an EPA identification number.

It should be noted that people handling wastes listed in Subpart D of Part 261 who have filed, or who intend to file an application to exempt their waste from regulation under the Subtitle C rules, must also comply with the notification requirements of section 3010.

If a person generates hazardous waste, Figure 4 indicates that he must comply with the Part 262 rules. If he transports it, he must comply with the Part 263 rules. The standards in both these Parts are designed to ensure, among other things, proper recordkeeping and reporting, the use of a manifest system to track shipments of hazardous waste, the use of proper labels and containers, and the delivery of the waste to a permitted treatment, storage, or disposal facility.

If a person owns or operates a facility which treats, stores, or disposes of hazardous waste, the standards with which he must comply depend on a number of factors. First of all, if the owner or operator of a *storage* facility is also the person who generates the waste, and the waste is stored at the facility for less than 90 days for subsequent shipment off-site, then the person must comply with § 262.34 of the Part 262 rules.

All other owners or operators of treatment, storage, or disposal facilities must comply with either the Part 264 or the Part 265 rules. To determine with which of these sets of rules an owner or operator must comply, he must find out whether his facility qualifies for interim status. To qualify, the owner or operator must: (1) Have been

treating, storing, or disposing of the hazardous waste, or commenced facility construction on or before October 21, 1976, (2) comply with the Section 3010 notification requirements, and (3) apply for a permit under Part 270 of this chapter.

If the owner or operator has done all of the above, he qualifies for interim status, and he must comply with the Part 265 rules. These rules contain administrative requirements, monitoring and closure standards, and an abbreviated set of technical and closure and post-closure cost estimate requirements. The owner or operator must comply with these standards until final administrative disposition of his permit application is made. If a permit is issued to the owner or operator, he must then comply with the permit which will be based on the Part 264 rules.

If the owner or operator has not carried out the above three requirements, he does not qualify for interim status. Until he is issued a permit for his facility, the owner or operator must stop waste management operations (if any) at the facility, and send his hazardous waste (if any) to a facility whose owner or operator has interim status or to a storage facility following the Part 262 rules.

In order to apply for a permit, the owner or operator must comply with the procedures specified in Part 270 of this chapter.

It should be noted that the Agency will be periodically revising the rules depicted in Figures 3 and 4. All persons are encouraged to write to EPA to verify that the regulations which they are reading are up-to-date. To obtain this verification, contact: Solid Waste Information, U.S. Environmental Protection Agency, 26 West St. Clair Street, Cincinnati, Ohio 45268 (513) 684-5362.

FIGURE 1

DEFINITION OF A SOLID WASTE

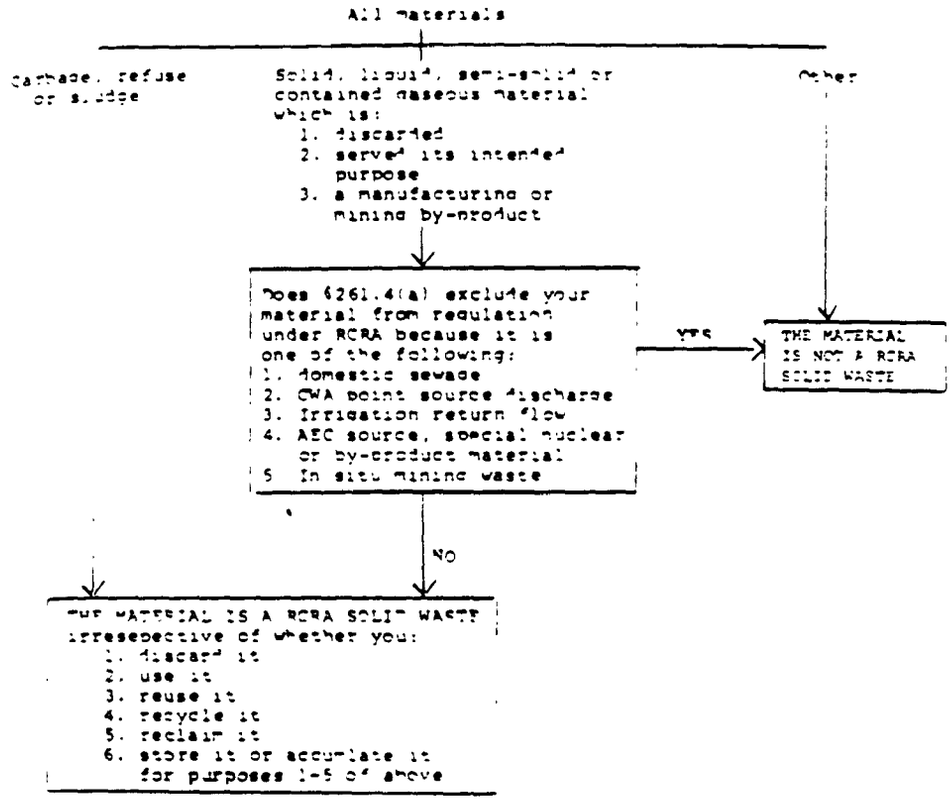

FIGURE 2

DEFINITION OF A HAZARDOUS WASTE

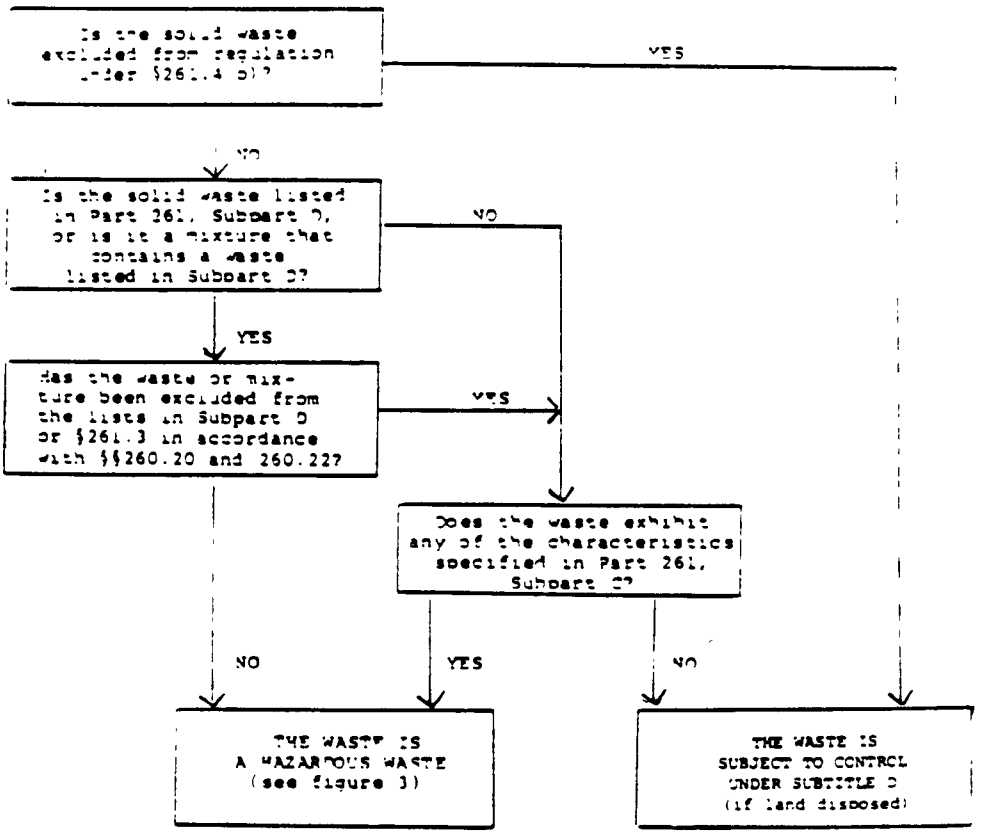

FIGURE 3

SPECIAL PROVISIONS FOR CERTAIN HAZARDOUS WASTE

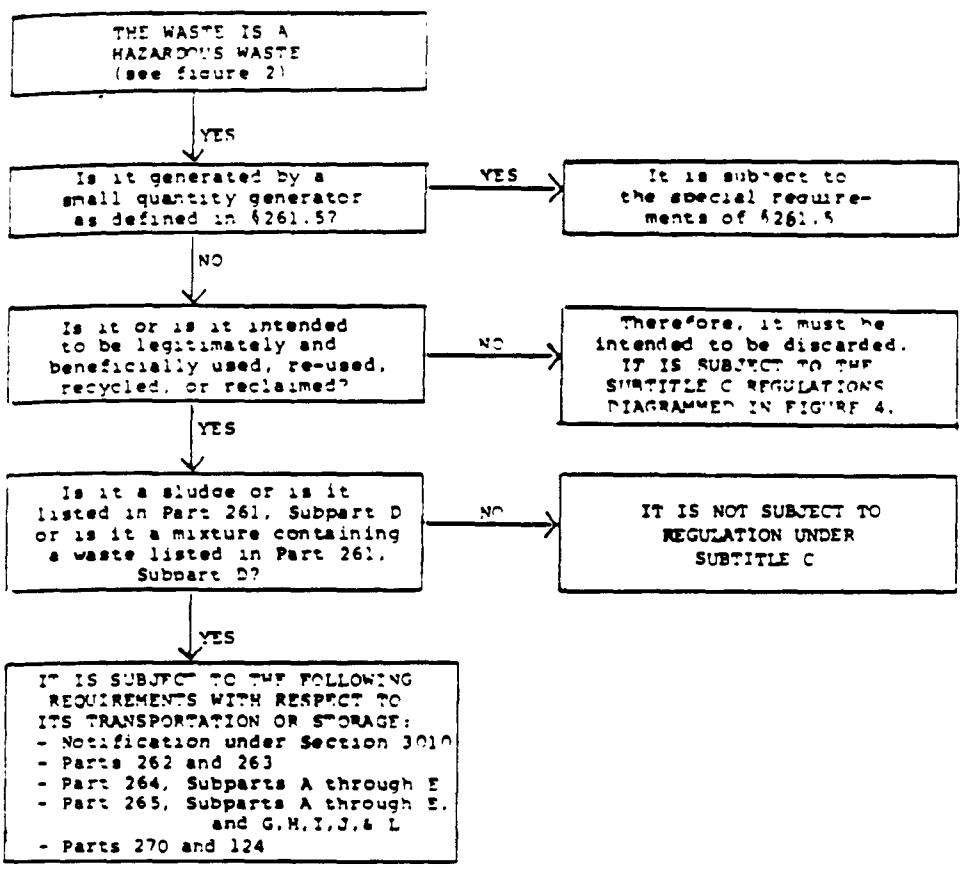

FIGURE 4

REGULATIONS FOR HAZARDOUS WASTE NOT COVERED IN DIAGRAM 3

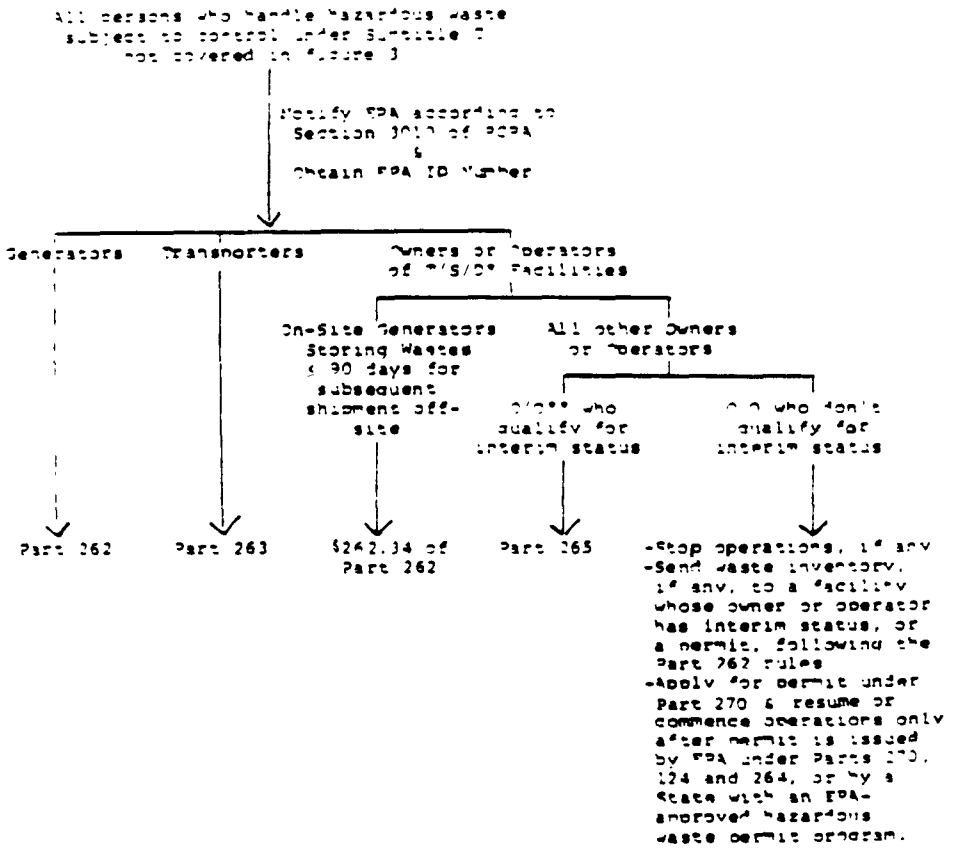

* T/S/D stands for Treatment, Storage, or Disposal
** O/O stands for Owners or Operators

[45 FR 33073, May 19, 1980, as amended at 48 FR 14293, Apr 1, 1983]

WESTON

B. HAZARDOUS WASTE

PART 261

IDENTIFICATION AND LISTING OF HAZARDOUS WASTE
40 CFR 261

6060A

PART 261—IDENTIFICATION AND LISTING OF HAZARDOUS WASTE

Subpart A—General

Sec
261.1 Purpose and scope
261.2 Definition of solid waste
261.3 Definition of hazardous waste
261.4 Exclusions
261.5 Special requirements for hazardous waste generated by small quantity generators.
261.6 Requirements for recyclable materials
261.7 Residues of hazardous waste in empty containers.

Subpart B—Criteria for Identifying the Characteristics of Hazardous Waste and for Listing Hazardous Wastes

261.10 Criteria for identifying the characteristics of hazardous waste
261.11 Criteria for listing hazardous waste.

Subpart C—Characteristics of Hazardous Waste

261.20 General.
261.21 Characteristic of ignitability.
261.22 Characteristic of corrosivity.
261.23 Characteristic of reactivity.
261.24 Characteristic of EP toxicity.

Subpart D—Lists of Hazardous Wastes

261.30 General.
261.31 Hazardous wastes from non-specific sources.
261.32 Hazardous wastes from specific sources
261.33 Discarded commercial chemical products, off-specification species, container residues, and spill residues thereof.

APPENDICES

APPENDIX I—REPRESENTATIVE SAMPLING METHODS
APPENDIX II—EP TOXICITY TEST PROCEDURES
APPENDIX III—CHEMICAL ANALYSIS TEST METHODS
APPENDIX IV—[RESERVED FOR RADIOACTIVE WASTE TEST METHODS]
APPENDIX V—[RESERVED FOR INFECTIOUS WASTE TREATMENT SPECIFICATIONS]
APPENDIX VI—[RESERVED FOR ETIOLOGIC AGENTS]
APPENDIX VII—BASIS FOR LISTING HAZARDOUS WASTE
APPENDIX VIII—HAZARDOUS CONSTITUENTS
APPENDIX IX—WASTES EXCLUDED UNDER §§ 260.20 AND 260.22
Sec
APPENDIX X—METHOD OF ANALYSIS FOR CLORINATED DIBENZO-P-DIOXINS AND DIBENZOFURANS

AUTHORITY: Secs. 1006, 2002(a), 3001 and 3002 of the Solid Waste Disposal Act as amended by the Resource Conservation and Recovery Act of 1976, as amended (42 U.S.C. 6905, 6912(a), 6921, and 6922).

SOURCE: 45 FR 33119, May 19, 1980, unless otherwise noted.

Subpart A—General

§ 261.1 Purpose and scope.

(a) This part identifies those solid wastes which are subject to regulation as hazardous wastes under Parts 262 through 265 and Parts 270, 271, and 124 of this chapter and which are subject to the notification requirements of section 3010 of RCRA. In this part:

(1) Subpart A defines the terms "solid waste" and "hazardous waste," identifies those wastes which are excluded from regulation under Parts 262 through 265, 270, 271 and 124 and establishes special management requirements for hazardous waste produced by small quantity generators and hazardous waste which is used, reused, recycled or reclaimed.

(2) Subpart B sets forth the criteria used by EPA to identify characteristics of hazardous waste and to list particular hazardous wastes.

(3) Subpart C identifies characteristics of hazardous waste.

(4) Subpart D lists particular hazardous wastes.

(b)(1) The definition of solid waste contained in this part applies only to wastes that also are hazardous for purposes of the regulations implementing Subtitle C of RCRA. For example, it does not apply to materials (such as non-hazardous scrap, paper, textiles, or rubber) that are not otherwise hazardous wastes and that are recycled.

(2) This part identifies only some of the materials which are solid wastes and hazardous wastes under Sections 3007, 3013, and 7003 of RCRA. A material which is not defined as a solid waste in this part, or is not a hazardous waste identified or listed in this part, is still a solid waste and a hazard-

ous waste for purposes of these sections if:

(i) In the case of Sections 3007 and 3013, EPA has reason to believe that the material may be a solid waste within the meaning of Section 1004(27) of RCRA and a hazardous waste within the meaning of Section 1004(5) of RCRA; or

(ii) In the case of Section 7003, the statutory elements are established.

(c) For the purposes of §§ 261.2 and 261.6:

(1) A "spent material" is any material that has been used and as a result of contamination can no longer serve the purpose for which it was produced without processing;

(2) "Sludge" has the same meaning used in § 260.10 of this chapter;

(3) A "by-product" is a material that is not one of the primary products of a production process and is not solely or separately produced by the production process. Examples are process residues such as slags or distillation column bottoms. The term does not include a co-product that is produced for the general public's use and is ordinarily used in the form it is produced by the process.

(4) A material is "reclaimed" if it is processed to recover a usable product, or if it is regenerated. Examples are recovery of lead values from spent batteries and regeneration of spent solvents.

(5) A material is "used or reused" if it is either:

(i) Employed as an ingredient (including use as an intermediate) in an industrial process to make a product (for example, distillation bottoms from one process used as feedstock in another process). However, a material will not satisfy this condition if distinct components of the material are recovered as separate end products (as when metals are recovered from metal-containing secondary materials); or

(ii) Employed in a particular function or application as an effective substitute for a commercial product (for example, spent pickle liquor used as phosphorous precipitant and sludge conditioner in wastewater treatment).

(6) "Scrap metal" is bits and pieces of metal parts (*e.g.*, bars, turnings, rods, sheets, wire) or metal pieces that may be combined together with bolts or soldering (*e.g.*, radiators, scrap automobiles, railroad box cars), which when worn or superfluous can be recycled.

(7) A material is "recycled" if it is used, reused, or reclaimed.

(8) A material is "accumulated speculatively" if it is accumulated before being recycled. A material is not accumulated speculatively, however, if the person accumulating it can show that the material is potentially recyclable and has a feasible means of being recycled; and that—during the calendar year (commencing on January 1)—the amount of material that is recycled, or transferred to a different site for recycling, equals at least 75 percent by weight or volume of the amount of that material accumulated at the beginning of the period. In calculating the percentage of turnover, the 75 percent requirement is to be applied to each material of the same type (*e.g.*, slags from a single smelting process) that is recycled in the same way (*i.e.*, from which the same material is recovered or that is used in the same way). Materials accumulating in units that would be exempt from regulation under § 261.4(c) are not be included in making the calculation. (Materials that are already defined as solid wastes also are not to be included in making the calculation.) Materials are no longer in this category once they are removed from accumulation for recycling, however.

[45 FR 33119, May 19, 1980, as amended at 48 FR 14293, Apr. 1, 1983; 50 FR 663, Jan. 4, 1985]

EFFECTIVE DATE NOTE: At 50 FR 663, Jan 4, 1985, § 261.1(c) was added, effective July 5, 1985.

§ 261.2 Definition of solid waste.

(a)(1) A *solid waste* is any discarded material that is not excluded by § 261.4(a) or that is not excluded by variance granted under §§ 260.30 and 260.31.

(2) A *discarded material* is any material which is:

(i) *Abandoned*, as explained in paragraph (b) of this section; or

(ii) *Recycled*, as explained in paragraph (c) of this section; or

(iii) Considered *inherently waste-like*, as explained in paragraph (d) of this section.

(b) Materials are solid waste if they are *abandoned* by being:

(1) Disposed of; or

(2) Burned or incinerated; or

(3) Accumulated, stored, or treated (but not recycled) before or in lieu of being abandoned by being disposed of, burned, or incinerated.

(c) Materials are solid wastes if they are *recycled*—or accumulated, stored, or treated before recycling—as specified in paragraphs (c)(1) through (c)(4) of this section.

(1) *Used in a manner constituting disposal.* (i) Materials noted with a "*" in Column 1 of Table I are solid wastes when they are:

(A) Applied to or placed on the land in a manner that constitutes disposal; or

(B) Contained in products that are applied to the land (in which case the product itself remains a solid waste).

(ii) However, commercial chemical products listed in § 261.33 are not solid wastes if they are applied to the land and that is their ordinary manner of use.

(2) *Burning for energy recovery.* (i) Materials noted with a "*" in column 2 of Table 1 are solid wastes when they are:

(A) Burned to recover energy;

(B) Used to produce a fuel;

(C) Contained in fuels (in which case the fuel itself remains a solid waste).

(ii) However, commercial chemical products listed in § 261.33 are not solid wastes if they are themselves fuels.

(3) *Reclaimed.* Materials noted with a "*" in column 3 of Table 1 are solid wastes when reclaimed.

(4) *Accumulated speculatively.* Materials noted with a "*" in column 4 of Table 1 are solid wastes when accumulated speculatively.

TABLE 1

	Use constituting disposal (261.2(c)(1))	Energy recovery, fuel (261.2(c)(2))	Reclamation (261.2(c)(3))	Speculative accumulation (261.2(c)(4))
	(1)	(2)	(3)	(4)
Spent Materials	(*)	(*)	(*)	(*)
Sludges (listed in 40 CFR Part 261.31 or 32)	(*)	(*)	(*)	(*)
Sludges exhibiting a characteristic of hazardous waste	(*)	(*)		(*)
By-products (listed in 40 CFR Part 261.31 or 261.32)	(*)	(*)	(*)	(*)
By-products exhibiting a characteristic of hazardous waste	(*)	(*)		(*)
Commercial chemical products listed in 40 CFR § 261.33	(*)	(*)		
Scrap metal	(*)	(*)	(*)	(*)

Note.—The terms "spent materials", "sludges", "by-products" and "scrap metal" are defined in § 261.1.

(d) *Inherently waste-like materials.* The following materials are solid wastes when they are recycled in any manner:

(1) Hazardous Waste Nos. F020, F021 (unless used as an ingredient to make a product at the site of generation), F022, F023, F026, and F028.

(2) The Administrator will use the following criteria to add wastes to that list:

(i)(A) The materials are ordinarily disposed of, burned, or incinerated; or

(B) The materials contain toxic constituents listed in Appendix VIII of Part 261 and these constituents are not ordinarily found in raw materials or products for which the materials substitute (or are found in raw materials or products in smaller concentrations) and are not used or reused during the recycling process; and

(ii) The material may pose a substantial hazard to human health and the environment when recycled.

(e) *Materials that are not solid waste when recycled.* (1) Materials are not solid wastes when they can be shown to be recycled by being:

(i) Used or reused as ingredients in an industrial process to make a prod-

uct, provided the materials are not being reclaimed; or

(ii) Used or reused as effective substitutes for commercial products; or

(iii) Returned to the original process from which they are generated, without first being reclaimed. The material must be returned as a substitute for raw material feedstock, and the process must use raw materials as principal feedstocks.

(2) The following materials are solid wastes, even if the recycling involves use, reuse, or return to the original process (described in paragraphs (e)(1)(i)-(iii) of this section):

(i) Materials used in a manner constituting disposal, or used to produce products that are applied to the land; or

(ii) Materials burned for energy recovery, used to produce a fuel, or contained in fuels; or

(iii) Materials accumulated speculatively; or

(iv) Materials listed in paragraph (d)(1) of this section.

(f) *Documentation of claims that materials are not solid wastes or are conditionally exempt from regulation.* Respondents in actions to enforce regulations implementing Subtitle C of RCRA who raise a claim that a certain material is not a solid waste, or is conditionally exempt from regulation, must demonstrate that there is a known market or disposition for the material, and that they meet the terms of the exclusion or exemption. In doing so, they must provide appropriate documentation (such as contracts showing that a second person uses the material as an ingredient in a production process) to demonstrate that the material is not a waste, or is exempt from regulation. In addition, owners or operators of facilities claiming that they actually are recycling materials must show that they have the necessary equipment to do so.

[50 FR 664, Jan. 4, 1985]

EFFECTIVE DATE NOTE: At 50 FR 664, Jan. 4, 1985, § 261.2 was revised, effective July 5, 1985 (except for paragraph (e) which was effective December 20, 1984). For the convenience of the user, the superseded text is set out below:

§ 261.2 Definition of solid waste.

(a) A solid waste is any garbage, refuse, sludge or any other waste material which is not excluded under § 261.4(a).

(b) An "other waste material" is any solid, liquid, semi-solid or contained gaseous material, resulting from industrial, commercial, mining or agricultural operations, or from community activities which:

(1) Is discarded or is being accumulated, stored or physically, chemically or biologically treated prior to being discarded; or

(2) Has served its original intended use and sometimes is discarded; or

(3) Is a manufacturing or mining by-product and sometimes is discarded.

(c) A material is "discarded" if it is abandoned (and not used, re-used, reclaimed or recycled) by being:

(1) Disposed of; or

(2) Burned or incinerated, except where the material is being burned as a fuel for the purpose of recovering usable energy; or

(3) Physically, chemically, or biologically treated (other than burned or incinerated) in lieu of or prior to being disposed of.

(d) A material is "disposed of" if it is discharged, deposited, injected, dumped, spilled, leaked or placed into or on any land or water so that such material or any constituent thereof may enter the environment or be emitted into the air or discharged into ground or surface waters.

(e) A "manufacturing or mining by-product" is a material that is not one of the primary products of a particular manufacturing or mining operation, is a secondary and incidental product of the particular operation and would not be solely and separately manufactured or mined by the particular manufacturing or mining operation. The term does not include an intermediate manufacturing or mining product which results from one of the steps in a manufacturing or mining process and is typically processed through the next step of the process within a short time.

§ 261.3 Definition of hazardous waste.

(a) A solid waste, as defined in § 261.2, is a hazardous waste if:

(1) It is not excluded from regulation as a hazardous waste under § 261.4(b); and

(2) It meets any of the following criteria:

(i) It exhibits any of the characteristics of hazardous waste identified in Subpart C.

(ii) It is listed in Subpart D and has not been excluded from the lists in Subpart D under §§ 260.20 and 260.22 of this chapter.

(iii) It is a mixture of a solid waste and a hazardous waste that is listed in Subpart D solely because it exhibits one or more of the characteristics of hazardous waste identified in Subpart C, unless the resultant mixture no longer exhibits any characteristic of hazardous waste identified in Subpart C.

(iv) It is a mixture of solid waste and one or more hazardous wastes listed in Subpart D and has not been excluded from this paragraph under §§ 260.20 and 260.22 of this chapter; however, the following mixtures of solid wastes and hazardous wastes listed in Subpart D are not hazardous wastes (except by application of paragraph (a)(2) (i) or (ii) of this section) if the generator can demonstrate that the mixture consists of wastewater the discharge of which is subject to regulation under either Section 402 or Section 307(b) of the Clean Water Act (including wastewater at facilities which have eliminated the discharge of wastewater) and:

(A) One or more of the following spent solvents listed in § 261.31—carbon tetrachloride, tetrachloroethylene, trichoroethylene—provided that the maximum total weekly usage of these solvents (other than the amounts that can be demonstrated not to be discharged to wastewater) divided by the average weekly flow of wastewater into the headworks of the facility's wastewater treatment or pretreatment system does not exceed 1 part per million; or

(B) One or more of the following spent solvents listed in § 261.31—methylene chloride, 1,1,1-trichloroethane, chlorobenzene, o-dichlorobenzene, cresols, cresylic acid, nitrobenzene, toluene, methyl ethyl ketone, carbon disulfide, isobutanol, pyridine, spent chlorofluorocarbon solvents—provided that the maximum total weekly usage of these solvents (other than the amounts that can be demonstrated not to be discharged to wastewater) divided by the average weekly flow of wastewater into the headworks of the facility's wastewater treatment or pretreatment system does not exceed 25 parts per million; or

(C) One of the following wastes listed in § 261.32—heat exchanger bundle cleaning sludge from the petroleum refining industry (EPA Hazardous Waste No. K050); or

(D) A discarded commercial chemical product, or chemical intermediate listed in § 261.33, arising from *de minimis* losses of these materials from manufacturing operations in which these materials are used as raw materials or are produced in the manufacturing process. For purposes of this subparagraph, *"de minimis"* losses include those from normal material handling operations (e.g. spills from the unloading or transfer of materials from bins or other containers, leaks from pipes, valves or other devices used to transfer materials); minor leaks of process equipment, storage tanks or containers; leaks from well-maintained pump packings and seals; sample purgings; relief device discharges; discharges from safety showers and rinsing and cleaning of personal safety equipment; and rinsate from empty containers or from containers that are rendered empty by that rinsing; or

(E) Wastewater resulting from laboratory operations containing toxic (T) wastes listed in Subpart D, provided that the annualized average flow of laboratory wastewater does not exceed one percent of total wastewater flow into the headworks of the facility's wastewater treatment or pre-treatment system, or provided the wastes, combined annualized average concentration does not exceed one part per million in the headworks of the facility's wastewater treatment or pre-treatment facility. Toxic (T) wastes used in laboratories that are demonstrated not to be discharged to wastewater are not to be included in this calculation.

(b) A solid waste which is not excluded from regulation under paragraph (a)(1) of this section becomes a hazardous waste when any of the following events occur:

(1) In the case of a waste listed in Subpart D, when the waste first meets the listing description set forth in Subpart D.

(2) In the case of a mixture of solid waste and one or more listed hazardous wastes, when a hazardous waste listed in Subpart D is first added to the solid waste.

(3) In the case of any other waste (including a waste mixture), when the waste exhibits any of the characteristics identified in Subpart C.

(c) Unless and until it meets the criteria of paragraph (d):

(1) A hazardous waste will remain a hazardous waste.

(2)(i) Except as otherwise provided in paragraph (c)(2)(ii) of this section, any solid waste generated from the treatment, storage, or disposal of a hazardous waste, including any sludge, spill residue, ash, emission control dust, or leachate (but not including precipitation run-off) is a hazardous waste. (However, materials that are reclaimed from solid wastes and that are used beneficially are not solid wastes and hence are not hazardous wastes under this provision unless the reclaimed material is burned for energy recovery or used in a manner constituting disposal.)

(ii) The following solid wastes are not hazardous even though they are generated from the treatment, storage, or disposal of a hazardous waste, unless they exhibit one or more of the characteristics of hazardous waste: (A) Waste pickle liquor sludge generated by lime stabilization of spent pickle liquor from the iron and steel industry (SIC Codes 331 and 332).

(d) Any solid waste described in paragraph (c) of this section is not a hazardous waste if it meets the following criteria:

(1) In the case of any solid waste, it does not exhibit any of the characteristics of hazardous waste identified in Subpart C.

(2) In the case of a waste which is a listed waste under Subpart D, contains a waste listed under Subpart D or is derived from a waste listed in Subpart D, it also has been excluded from paragraph (c) under §§ 260.20 and 260.22 of this chapter.

[45 FR 33119, May 19, 1980, as amended at 46 FR 56588, Nov. 11, 1981; 50 FR 14219, Apr. 11, 1985]

EFFECTIVE DATE NOTE: At 50 FR 664, Jan. 4, 1985, and corrected at 50 FR 14219, Apr. 11, 1985, § 261.3(c)(2) was revised, effective July 5, 1985. For the convenience of the user the superseded text is set out below:

§ 261.3 Definition of hazardous waste.

* * * * *

(c) * * *

(2)(i) Except as otherwise provided in paragraph (c)(2)(ii) of this section, any solid waste generated from the treatment, storage, or disposal of a hazardous waste, including any sludge, spill residue, ash, emission control dust or leachate (but not including precipitation run-off) is a hazardous waste.

(ii) The following solid wastes are not hazardous even though they are generated from the treatment, storage, or disposal of a hazardous waste, unless they exhibit one or more of the characteristics of hazardous waste: (A) Waste pickle liquor sludge generated by lime stabilization of spent pickle liquor from the iron and steel industry (SIC codes 331 and 332).

* * * * *

§ 261.4 Exclusions.

(a) *Materials which are not solid wastes.* The following materials are not solid wastes for the purpose of this part:

(1)(i) Domestic sewage; and

(ii) Any mixture of domestic sewage and other wastes that passes through a sewer system to a publicly-owned treatment works for treatment. "Domestic sewage" means untreated sanitary wastes that pass through a sewer system.

(2) Industrial wastewater discharges that are point source discharges subject to regulation under Section 402 of the Clean Water Act, as amended.

[*Comment:* This exclusion applies only to the actual point source discharge. It does not exclude industrial wastewaters while they are being collected, stored or treated before discharge, nor does it exclude sludges that are generated by industrial wastewater treatment.]

(3) Irrigation return flows.

(4) Source, special nuclear or byproduct material as defined by the Atomic Energy Act of 1954, as amended, 42 U.S.C. 2011 *et seq.*

(5) Materials subjected to in-situ mining techniques which are not removed from the ground as part of the extraction process.

(6) Pulping liquors (*i.e.*, black liquor) that are reclaimed in a pulping liquor

recovery furnace and then reused in the pulping process, unless it is accumulated speculatively as defined in § 261.1(c) of this chapter.

(7) Spent sulfuric acid used to produce virgin sulfuric acid, unless it is accumulated speculatively as defined in § 261.1(c) of this chapter.

(b) *Solid wastes which are not hazardous wastes.* The following solid wastes are not hazardous wastes:

(1) Household waste, including household waste that has been collected, transported, stored, treated, disposed, recovered (*e.g.*, refuse-derived fuel), or reused. "Household waste" means any waste material (including garbage, trash and sanitary wastes in septic tanks) derived from households (including single and multiple residences, hotels and motels, bunkhouses, ranger stations, crew quarters, campgrounds, picnic grounds, and day-use recreation areas).

(2) Solid wastes generated by any of the following and which are returned to the soils as fertilizers:

(i) The growing and harvesting of agricultural crops.

(ii) The raising of animals, including animal manures.

(3) Mining overburden returned to the mine site.

(4) Fly ash waste, bottom ash waste, slag waste, and flue gas emission control waste generated primarily from the combustion of coal or other fossil fuels.

(5) Drilling fluids, produced waters, and other wastes associated with the exploration, development, or production of crude oil, natural gas or geothermal energy.

(6)(i) Wastes which fail the test for the characteristic of EP toxicity because chromium is present or are listed in Subpart D due to the presence of chromium, which do not fail the test for the characteristic of EP toxicity for any other constituent or are not listed due to the presence of any other constituent, and which do not fail the text for any other characteristic, if it is shown by a waste generator or by waste generators that:

(A) The chromium in the waste is exclusively (or nearly exclusively) trivalent chromium, and

(B) The waste is generated from an industrial process which uses trivalent chromium exlcusively (or nearly exclusively) and the process does not generate hexavalent chromium; and

(C) The waste is typically and frequently managed in non-oxidizing environments.

(ii) Specific wastes which meet the standard in paragraphs (b)(6)(i)(A), (B) and (C) (so long as they do not fail the test for the charactristic of EP toxicity, and do not fail the test for any other characteristic) are:

(A) Chrome (blue) trimmings generated by the following subcategories of the leather tanning and finishing industry; hair pulp/chrome tan/retan/wet finish; hair save/chrome tan/retan/wet finish; retan/wet finish; no beamhouse; through-the-blue; and shearling.

(B) Chrome (blue) shavings generated by the following subcategories of the leather tanning and finishing industry: hair pulp/chrome tan/retan/wet finish; hair save/chrome tan/retan/wet finish; retan/wet finish; no beamhouse; through-the-blue; and shearling.

(C) Buffing dust generated by the following subcategories of the leather tanning and finishing industry; hair pulp/chrome tan/retan/wet finish; hair save/chrome tan/retan/wet finish; retan/wet finish; no beamhouse; through-the-blue.

(D) Sewer screenings generated by the following subcategories of the leather tanning and finishing industry: hair pulp/crome tan/retan/wet finish; hair save/chrome tan/retan/wet finish; retan/wet finish; no beamhouse; through-the-blue; and shearling.

(E) Wastewater treatment sludges generated by the following subcategories of the leather tanning and finishing industry: hair pulp/chrome tan/retan/wet finish; hair save/chrome tan/retan/wet finish; retan/wet finish; no beamhouse; through-the-blue; and shearling.

(F) Wastewater treatment sludes generated by the following subcategories of the leather tanning and finishing industry, hair pulp/chrome tan/retan/wet finish; hair save/chrome-

tan/retan/wet finish; and through-the-blue.

(G) Waste scrap leather from the leather tanning industry, the shoe manufacturing industry, and other leather product manufacturing industries.

(H) Wastewater treatment sludges from the production of TiO_2 pigment using chromium-bearing ores by the chloride process.

(7) Solid waste from the extraction, beneficiation and processing of ores and minerals (including coal), including phosphate rock and overburden from the mining of uranium ore.

(8) Cement kiln dust waste.

(9) Solid waste which consists of discarded wood or wood products which fails the test for the characteristic of EP toxicity and which is not a hazardous waste for any other reason if the waste is generated by persons who utilize the arsenical-treated wood and wood products for these materials' intended end use.

(c) Hazardous wastes which are exempted from certain regulations. A hazardous waste which is generated in a product or raw material storage tank, a product or raw material transport vehicle or vessel, a product or raw material pipeline, or in a manufacturing process unit or an associated non-waste-treatment-manufacturing unit, is not subject to regulation under Parts 262 through 265, 270, 271 and 124 of this chapter or to the notification requirements of Section 3010 of RCRA until it exits the unit in which it was generated, unless the unit is a surface impoundment, or unless the hazardous waste remains in the unit more than 90 days after the unit ceases to be operated for manufacturing, or for storage or transportation of product or raw materials.

(d) *Samples.* (1) Except as provided in paragraph (d)(2) of this section, a sample of solid waste or a sample of water, soil, or air, which is collected for the sole purpose of testing to determine its characteristics or composition, is not subject to any requirements of this part or Parts 262 through 267 or Part 270 or Part 124 of this chapter or to the notification requirements of Section 3010 of RCRA, when:

(i) The sample is being transported to a laboratory for the purpose of testing; or

(ii) The sample is being transported back to the sample collector after testing; or

(iii) The sample is being stored by the sample collector before transport to a laboratory for testing; or

(iv) The sample is being stored in a laboratory before testing; or

(v) The sample is being stored in a laboratory after testing but before it is returned to the sample collector; or

(vi) The sample is being stored temporarily in the laboratory after testing for a specific purpose (for example, until conclusion of a court case or enforcement action where further testing of the sample may be necessary).

(2) In order to qualify for the exemption in paragraphs (d)(1) (i) and (ii) of this section, a sample collector shipping samples to a laboratory and a laboratory returning samples to a sample collector must:

(i) Comply with U.S. Department of Transportation (DOT), U.S. Postal Service (USPS), or any other applicable shipping requirements; or

(ii) Comply with the following requirements if the sample collector determines that DOT, USPS, or other shipping requirements do not apply to the shipment of the sample:

(A) Assure that the following information accompanies the sample:

(*1*) The sample collector's name, mailing address, and telephone number;

(*2*) The laboratory's name, mailing address, and telephone number;

(*3*) The quantity of the sample;

(*4*) The date of shipment; and

(*5*) A description of the sample.

(B) Package the sample so that it does not leak, spill, or vaporize from its packaging.

(3) This exemption does not apply if the laboratory determines that the waste is hazardous but the laboratory is no longer meeting any of the conditions stated in paragraph (d)(1) of this section.

[45 FR 33119, May 19, 1980, as amended at 45 FR 72037, Oct. 30, 1980; 45 FR 76620, Nov 19, 1980; 45 FR 78531, Nov. 25, 1980; 45 FR 80287, Dec. 4, 1980; 46 FR 27476, May 20, 1981, 46 FR 47429, Sept. 25, 19'.., 48 FR

14293, Apr 1, 1983 48 FR 30115, June 30, 1983 49 FR 44980, Nov 13, 1984, 50 FR 665, Jan 4, 1985, 50 FR 14219, Apr 11, 1985]

EFFECTIVE DATE NOTE At 50 FR 665, Jan 4, 1985, as corrected at 50 FR 14219, Apr 11, 1985, § 261.4(a) (6) and (7) were added, effective July 5, 1985.

§ 261.5 Special requirements for hazardous waste generated by small quantity generators.

(a) A generator is a small quantity generator in a calendar month if he generates less than 1000 kilograms of hazardous waste in that month.

(b) Except for those wastes identified in paragraphs (e) and (f) of this section, a small quantity generator's hazardous wastes are not subject to regulation under Parts 262 through 265 and Parts 270 and 124 of this chapter, and the notification requirements of Section 3010 of RCRA, provided the generator complies with the requirements of paragraph (g) of this section.

(c) Hazardous waste that is recycled and that is excluded from regulation under §§ 261.6 (a)(2)(iii) and (v), (a)(3), or 266.36 is not included in the quantity determinations of this section and is not subject to any requirements of this section. Hazardous waste that is subject to the requirements of § 261.6 (b) and (c) and Subparts C, D, and F of Part 266 is included in the quantity determination of this section and is subject to the requirements of this section.

(d) In determining the quantity of hazardous waste he generates, a generator need not include:

(1) His hazardous waste when it is removed from on-site storage; or

(2) Hazardous waste produced by on-site treatment of his hazardous waste.

(e) If a small quantity generator generates acutely hazardous waste in a calendar month in quantities greater than set forth below, all quantities of that acutely hazardous waste are subject to regulation under Parts 262 through 265 and Parts 270 and 124 of this chapter, and the notification requirements of Section 3010 of RCRA:

(1) A total of one kilogram of acute hazardous wastes listed in §§ 261.31, 261.32, or 261.33(e).

(2) A total of 100 kilograms of any residue or contaminated soil, waste or other debris resulting from the clean-up of a spill, into or on any land or water, of any acute hazardous wastes listed in §§ 261.31, 261.32, or 261.33(e).

(f) A small quantity generator may accumulate hazardous waste on-site. If he accumulates at any time more than a total of 1000 kilograms of his hazardous waste, or his acutely hazardous wastes in quantities greater than set forth in paragraph (e)(1), or (e)(2) of this section, all of those accumulated wastes for which the accumulation limit was exceeded are subject to regulation under Parts 262 through 265 and Parts 270 and 124 of this chapter, and the notification requirements of Section 3010 of RCRA. The time period of § 262.34 for accumulation of wastes on-site begins for a small quantity generator when the accumulated wastes exceed the applicable exclusion level.

(g) In order for hazardous waste generated by a small quantity generator to be excluded from full regulation under this section, the generator must:

(1) Comply with § 262.11 of this chapter;

(2) If he stores his hazardous waste on-site, store it in compliance with the requirements of paragraph (f) of this section; and

(3) Either treat or dispose of his hazardous waste in an on-site facility, or ensure delivery to an off-site storage, treatment or disposal facility, either of which is:

(i) Permitted under Part 270 of this chapter;

(ii) In interim status under Parts 270 and 265 of this chapter;

(iii) Authorized to manage hazardous waste by a State with a hazardous waste management program approved under Part 271 of this chapter;

(iv) Permitted, licensed or registered by a State to manage municipal or industrial solid waste; or

(v) A facility which:

(A) Beneficially uses or re-uses, or legitimately recycles or reclaims his waste; or

(B) Treats his waste prior to beneficial use or re-use, or legitimate recycling or reclamation.

(h) Hazardous waste subject to the reduced requirements of this section may be mixed with non-hazardous

waste and remain subject to these reduced requirements even though the resultant mixture exceeds the quantity limitations identified in this section, unless the mixture meets any of the characteristics of hazardous wastes identified in Subpart C.

(i) If a small quantity generator mixes a solid waste with a hazardous waste that exceeds a quantity exclusion level of this section, the mixture is subject to full regulation.

[45 FR 76623, Nov. 19, 1980, as amended at 46 FR 34587, July 2, 1981; 48 FR 14294, Apr. 1, 1983; 50 FR 665, Jan. 4, 1985; 50 FR 1999, Jan. 14, 1985; 50 FR 14219, Apr. 11, 1985]

EFFECTIVE DATE NOTE: At 50 FR 665, Jan. 4, 1985, as corrected at 50 FR 14219, Apr. 11, 1985, § 261.5(c) was revised, effective July 5, 1985. At 50 FR 1999, Jan. 14, 1985, § 261.5(e)(1) and (2) were revised, effective July 15, 1985. For the convenience of the user, the superseded text is set out below:

§ 261.5 Special requirements for hazardous waste generated by small quantity generators.

* * * * *

(c) Hazardous waste that is beneficially used or re-used or legitimately recycled or reclaimed and that is excluded from regulation by § 261.6(a) is not included in the quantity determinations of this section, and is not subject to any requirements of this section. Hazardous waste that is subject to the special requirements of § 261.6(b) is included in the quantity determinations of this section and is subject to the requirements of this section.

* * * * *

(e) * * *

(1) A total of one kilogram of commercial chemical products and manufacturing chemical intermediates having the generic names listed in § 261.33(e), and off-specification commercial chemical products and manufacturing chemical intermediates which, if they met specifications, would have the generic names listed in § 261.33(e).

(2) A total of 100 kilograms of any residue or contaminated soil, water or other debris resulting from the clean-up of a spill, into or on any land or water, of any commercial chemical products or manufacturing chemical intermediates having the generic names listed in § 261.33(e), or any residue or contaminated soil, water or other debris resulting from the cleanup of a spill, into or on any land or water, of any off-specification commercial chemical produ . or manufacturing chemical intermediates which, if they met specifications, would have the generic names listed in § 261.33(e).

* * * * *

§ 261.6 Requirements for recyclable materials.

(a)(1) Hazardous wastes that are recycled are subject to the requirements for generators, transporters, and storage facilities of paragraphs (b) and (c) of this section, except for the materials listed in paragraphs (a)(2) and (a)(3) of this section. Hazardous wastes that are recycled will be known as "recyclable materials."

(2) The following recyclable materials are not subject to the requirements of this section but are regulated under Subparts C through G of Part 266 of this chapter and all applicable provisions in Parts 270 and 124 of this chapter:

(i) Recyclable materials used in a manner constituting disposal (Subpart C);

(ii) Hazardous wastes burned for energy recovery in boilers and industrial furnaces that are not regulated under Subpart O of Part 264 or 265 of this chapter (Subpart D);

(iii) [Reserved for used oil];

(iv) Recyclable materials from which precious metals are reclaimed (Subpart F);

(v) Spent lead-acid batteries that are being reclaimed (Subpart G).

(3) The following recyclable materials are not subject to regulation under Parts 262 through 266 or Parts 270 or 124 of this chapter, and are not subject to the notification requirements of Section 3010 of RCRA:

(i) Industrial ethyl alcohol that is reclaimed;

(ii) Used batteries (or used battery cells) returned to a battery manufacturer for regeneration;

(iii) Used oil that exhibits one or more of the characteristics of hazardous waste; or

(iv) Scrap metal.

(b) Generators and transporters of recyclable materials are subject to the applicable requirements of Parts 262 and 263 of this chapter and the notification requirements under Section

3010 of RCRA, except as provided in paragraph (a) of this section.

(c)(1) Owners or operators of facilities that store recyclable materials are regulated under all applicable provisions of Subparts A through L of Parts 264 and 265 and Parts 270 and 124 of this chapter and the notification requirement under Section 3010 of RCRA, except as provided in paragraph (a) of this section.

(2) Owners or operators of facilities that recycle recyclable materials without storing them before they are recycled are subject to the following requirements, except as provided in paragraph (a) of this section:

(i) Notification requirements under Section 3010 of RCRA;

(ii) Sections 265.71 and 265.72 (dealing with the use of the manifest and manifest discrepancies) of this chapter

[50 FR 665, Jan. 4, 1985]

EFFECTIVE DATE NOTE: At 50 FR 665, Jan. 4 1985, § 261.6 was revised, effective July 5, 1985 For the convenience of the user, the superseded text is set out below:

§ 261.6 Special requirements for hazardous waste which is used, re-used, recycled or reclaimed.

(a) Except as otherwise provided in paragraph (b) of this section, a hazardous waste which meets any of the following criteria is not subject to regulation under Parts 262 through 265 or Parts 270, 271, and 124 of this Chapter and is not subject to the notification requirements of Section 3010 of RCRA until such time as the Administrator promulgates regulations to the contrary

(1) It is being beneficially used or re-used or legitimately recycled or reclaimed.

(2) It is being accumulated, stored or physically, chemically or biologically treated prior to beneficial use or re-use or legitimate recycling or reclamation.

(3) It is one of the following materials being used, reused, recycled or reclaimed in the specified manner:

(i) Spent pickle liquor which is reused in wastewater treatment at a facility holding a National Pollutant Discharge Elimination System (NPDES) permit, or which is being accumulated, stored, or physically, chemically or biologically treated before such reuse

(b) Except for those wastes listed in paragraph (a)(3) of this section, a hazardous waste that is a sludge, or that is listed in § 261 31 or § 261.32, or that contains one or more hazardous wastes listed in § 261.31 or § 261 32 and that is transported or stored prior to being used, re-used, recycled or reclaimed is subject to the following requirements with respect to such transporation or storage:

(1) Notification requirements under Section 3010 RCRA

(2) Part 262 of this chapter

(3) Part 263 of this chapter.

(4) Applicable provisions of Subparts A through L of Part 264 of this chapter.

(5) Applicable provisions of Subparts A through L of Part 265 of this chapter

(6) Parts 270 and 124 of this chapter, with respect to storage facilities.

[45 FR 33119, May 19, 1980, as amended at 46 FR 44973, Sept. 8, 1981; 48 FR 2532, Jan 20, 1983; 48 FR 14294, Apr. 1, 1983]

§ 261.7 Residues of hazardous waste in empty containers.

(a)(1) Any hazardous waste remaining in either (i) an empty container or (ii) an inner liner removed from an empty container, as defined in paragraph (b) of this section, is not subject to regulation under Parts 261 through 265, or Part 270 or 124 of this chapter or to the notification requirements of Section 3010 of RCRA.

(2) Any hazardous waste in either (i) a container that is not empty or (ii) an inner liner removed from a container that is not empty, as defined in paragraph (b) of this section, is subject to regulation under Parts 261 through 265, and Parts 270 and 124 of this chapter and to the notification requirements of Section 3010 of RCRA.

(b)(1) A container or an inner liner removed from a container that has held any hazardous waste, except a waste that is a compressed gas or that is identified as an acute hazardous waste listed in §§ 261.31, 261.32, or 261.33(e) of this chapter is empty if:

(i) All wastes have been removed that can be removed using the practices commonly employed to remove materials from that type of container, *e.g.*, pouring, pumping, and aspirating, *and*

(ii) No more than 2.5 centimeters (one inch) of residue remain on the bottom of the container or inner liner, *or*

(iii)(A) No more than 3 percent by weight of the total capacity of the container remains in the container or inner liner if the container is less than or equal to 110 gallons in size, or

(B) No more than 0.3 percent by weight of the total capacity of the container remains in the container or inner liner if the container is greater than 110 gallons in size.

(2) A container that has held a hazardous waste that is a compressed gas is empty when the pressure in the container approaches atmospheric.

(3) A container or an inner liner removed from a container that has held an acute hazardous waste listed in §§ 261.31, 261.32, or 261.33(e) is empty if:

(i) The container or inner liner has been triple rinsed using a solvent capable of removing the commercial chemical product or manufacturing chemical intermediate;

(ii) The container or inner liner has been cleaned by another method that has been shown in the scientific literature, or by tests conducted by the generator, to achieve equivalent removal; or

(iii) In the case of a container, the inner liner that prevented contact of the commercial chemical product or manufacturing chemical intermediate with the container, has been removed.

[45 FR 78529, Nov. 25, 1980, as amended at 47 FR 36097, Aug. 18, 1982; 48 FR 14294, Apr. 1, 1983; 50 FR 1999, Jan. 14, 1985]

EFFECTIVE DATE NOTE: At 50 FR 1999, Jan. 14, 1985, § 261.7(b)(1) and (3) introductory texts were revised, effective July 15, 1985. For the convenience of the user, the superseded text is set out below:

§ 261.7 Residues of hazardous waste in empty containers.

* * * * *

(b)(1) A container or an inner liner removed from a container that has held any hazardous waste, except a waste that is a compressed gas or that is identified in § 261.33(c) of this chapter, is empty if:

* * * * *

(3) A container or an inner liner removed from a container that has held a hazardous waste identified in § 261.33(c) of this chapter is empty if:

* * * * *

Subpart B—Criteria for Identifying the Characteristics of Hazardous Waste and for Listing Hazardous Waste

§ 261.10 Criteria for identifying the characteristics of hazardous waste.

(a) The Administrator shall identify and define a characteristic of hazardous waste in Subpart C only upon determining that:

(1) A solid waste that exhibits the characteristic may:

(i) Cause, or significantly contribute to, an increase in mortality or an increase in serious irreversible, or incapacitating reversible, illness; or

(ii) Pose a substantial present or potential hazard to human health or the environment when it is improperly treated, stored, transported, disposed of or otherwise managed; and

(2) The characteristic can be:

(i) Measured by an available standardized test method which is reasonably within the capability of generators of solid waste or private sector laboratories that are available to serve generators of solid waste; or

(ii) Reasonably detected by generators of solid waste through their knowledge of their waste.

§ 261.11 Criteria for listing hazardous waste.

(a) The Administrator shall list a solid waste as a hazardous waste only upon determining that the solid waste meets one of the following criteria:

(1) It exhibits any of the characteristics of hazardous waste identified in Subpart C.

(2) It has been found to be fatal to humans in low doses or, in the absence of data on human toxicity, it has been shown in studies to have an oral LD 50 toxicity (rat) of less than 50 milligrams per kilogram, an inhalation LC 50 toxicity (rat) of less than 2 milligrams per liter, or a dermal LD 50 toxicity (rabbit) of less than 200 milligrams per kilogram or is otherwise capable of causing or significantly contributing to an increase in serious irreversible, or incapacitating reversible, illness. (Waste listed in accordance with these criteria will be designated Acute Hazardous Waste.)

(3) It contains any of the toxic constituents listed in Appendix VIII unless, after considering any of the following factors, the Administrator concludes that the waste is not capable of posing a substantial present or potential hazard to human health or the environment when improperly treated, stored, transported or disposed of, or otherwise managed:

(i) The nature of the toxicity presented by the constituent.

(ii) The concentration of the constituent in the waste.

(iii) The potential of the constituent or any toxic degradation product of the constituent to migrate from the waste into the environment under the types of improper management considered in paragraph (a)(3)(vii) of this section.

(iv) The persistence of the constituent or any toxic degradation product of the constituent.

(v) The potential for the constituent or any toxic degradation product of the constituent to degrade into nonharmful constituents and the rate of degradation.

(vi) The degree to which the constituent or any degradation product of the constituent bioaccumulates in ecosystems.

(vii) The plausible types of improper management to which the waste could be subjected.

(viii) The quantities of the waste generated at individual generation sites or on a regional or national basis.

(ix) The nature and severity of the human health and environmental damage that has occurred as a result of the improper management of wastes containing the constituent.

(x) Action taken by other governmental agencies or regulatory programs based on the health or environmental hazard posed by the waste or waste constituent.

(xi) Such other factors as may be appropriate.

Substances will be listed on Appendix VIII only if they have been shown in scientific studies to have toxic, carcinogenic, mutagenic or teratogenic effects on humans or other life forms.

Wastes listed in accordance with these criteria will be designated Toxic Wastes.)

(b) The Administrator may list classes or types of solid waste as hazardous waste if he has reason to believe that individual wastes, within the class or type of waste, typically or frequently are hazardous under the definition of hazardous waste found in Section 1004(5) of the Act.

(c) The Administrator will use the criteria for listing specified in this section to establish the exclusion limits referred to in § 261.5(c).

Subpart C—Characteristics of Hazardous Waste

§ 261.20 General.

(a) A solid waste, as defined in § 261.2, which is not excluded from regulation as a hazardous waste under § 261.4(b), is a hazardous waste if it exhibits any of the characteristics identified in this subpart.

[*Comment:* § 262.11 of this chapter sets forth the generator's responsibility to determine whether his waste exhibits one or more of the characteristics identified in this subpart.]

(b) A hazardous waste which is identified by a characteristic in this subpart, but is not listed as a hazardous waste in Subpart D, is assigned the EPA Hazardous Waste Number set forth in the respective characteristic in this subpart. This number must be used in complying with the notification requirements of Section 3010 of the Act and certain recordkeeping and reporting requirements under Parts 262 through 265 and Part 270 of this chapter.

(c) For purposes of this subpart, the Administrator will consider a sample obtained using any of the applicable sampling methods specified in Appendix I to be a representative sample within the meaning of Part 260 of this chapter.

[*Comment:* Since the Appendix I sampling methods are not being formally adopted by the Administrator, a person who desires to employ an alternative sampling method is not required to demonstrate the equivalency of his method under the procedures set forth in §§ 260.20 and 260.21.]

[45 FR 33119, May 19, 1980, as amended at 48 FR 14294, Apr. 1, 1983]

§ 261.21 Characteristic of ignitability.

(a) A solid waste exhibits the characteristic of ignitability if a representative sample of the waste has any of the following properties:

(1) It is a liquid, other than an aqueous solution containing less than 24 percent alcohol by volume and has flash point less than 60°C (140°F), as determined by a Pensky-Martens Closed Cup Tester, using the test method specified in ASTM Standard D-93-79 or D-93-80 (incorporated by reference, see § 260.11), or a Setaflash Closed Cup Tester, using the test method specified in ASTM Standard D-3278-78 (incorporated by reference, see § 260.11), or as determined by an equivalent test method approved by the Administrator under procedures set forth in §§ 260.20 and 260.21.

(2) It is not a liquid and is capable, under standard temperature and pressure, of causing fire through friction, absorption of moisture or spontaneous chemical changes and, when ignited, burns so vigorously and persistently that it creates a hazard.

(3) It is an ignitable compressed gas as defined in 49 CFR 173.300 and as determined by the test methods described in that regulation or equivalent test methods approved by the Administrator under §§ 260.20 and 260.21.

(4) It is an oxidizer as defined in 49 CFR 173.151.

(b) A solid waste that exhibits the characteristic of ignitability, but is not listed as a hazardous waste in Subpart D, has the EPA Hazardous Waste Number of D001.

[45 FR 33119, May 19, 1980, as amended at 46 FR 35247, July 7, 1981]

§ 261.22 Characteristic of corrosivity.

(a) A solid waste exhibits the characteristic of corrosivity if a representative sample of the waste has either of the following properties:

(1) It is aqueous and has a pH less than or equal to 2 or greater than or equal to 12.5, as determined by a pH meter using either an EPA test method or an equivalent test method approved by the Administrator under the procedures set forth in §§ 260.20 and 260.21. The EPA test method for pH is specified as Method 5.2 in "Test Methods for the Evaluation of Solid Waste, Physical/Chemical Methods" (incorporated by reference, see § 260.11).

(2) It is a liquid and corrodes steel (SAE 1020) at a rate greater than 6.35 mm (0.250 inch) per year at a test temperature of 55°C (130°F) as determined by the test method specified in NACE (National Association of Corrosion Engineers) Standard TM-01-69 as standardized in "Test Methods for the Evaluation of Solid Waste, Physical/Chemical Methods" (incorporated by reference, see § 260.11) or an equivalent test method approved by the Administrator under the procedures set forth in §§ 260.20 and 260.21.

(b) A solid waste that exhibits the characteristic of corrosivity, but is not listed as a hazardous waste in Subpart D, has the EPA Hazardous Waste Number of D002.

[45 FR 33119, May 19, 1980, as amended at 46 FR 35247, July 7, 1981]

§ 261.23 Characteristic of reactivity.

(a) A solid waste exhibits the characteristic of reactivity if a representative sample of the waste has *any* of the following properties:

(1) It is normally unstable and readily undergoes violent change without detonating.

(2) It reacts violently with water.

(3) It forms potentially explosive mixtures with water.

(4) When mixed with water, it generates toxic gases, vapors or fumes in a quantity sufficient to present a danger to human health or the environment.

(5) It is a cyanide or sulfide bearing waste which, when exposed to pH conditions between 2 and 12.5, can generate toxic gases, vapors or fumes in a quantity sufficient to present a danger to human health or the environment.

(6) It is capable of detonation or explosive reaction if it is subjected to a strong initiating source or if heated under confinement.

(7) It is readily capable of detonation or explosive decomposition or reaction at standard temperature and pressure.

(8) It is a forbidden explosive as defined in 49 CFR 173.51, or a Class A explosive as defined in 49 CFR 173.53

or a Class B explosive as defined in 49 CFR 173.88.

(b) A solid waste that exhibits the characteristic of reactivity, but is not listed as a hazardous waste in Subpart D has the EPA Hazardous Waste Number of D003.

§ 261.24 Characteristic of EP toxicity.

(a) A solid waste exhibits the characteristic of EP toxicity if, using the test methods described in Appendix II or equivalent methods approved by the Administrator under the procedures set forth in §§ 260.20 and 260.21, the extract from a representative sample of the waste contains any of the contaminants listed in Table I at a concentration equal to or greater than the respective value given in that Table. Where the waste contains less than 0.5 percent filterable solids, the waste itself, after filtering, is considered to be the extract for the purposes of this section.

(b) A solid waste that exhibits the characteristic of EP toxicity, but is not listed as a hazardous waste in Subpart D has the EPA Hazardous Waste Number specified in Table I which corresponds to the toxic contaminant causing it to be hazardous.

TABLE I—MAXIMUM CONCENTRATION OF CONTAMINANTS FOR CHARACTERISTIC OF EP TOXICITY

EPA hazardous waste number	Contaminant	Maximum concentration (milligrams per liter)
D004	Arsenic	5.0
D005	Barium	100.0
D006	Cadmium	1.0
D007	Chromium	5.0
D008	Lead	5.0
D009	Mercury	0.2
D010	Selenium	1.0
D011	Silver	5.0
D012	Endrin (1,2,3,4,10,10-hexachloro-1,7-epoxy-1,4,4a,5,6,7,8,8a-octahydro-1,4-endo, endo-5,8-dimethano-naphthalene	0.02
D013	Lindane (1,2,3,4,5,6-hexachlorocyclohexane gamma isomer)	0.4
D014	Methoxychlor (1,1,1-Trichloro-2,2-bis [p-methoxyphenyl]ethane)	10.0
D015	Toxaphene ($C_{10}H_{10}Cl_8$, Technical chlorinated camphene, 67-69 percent chlorine)	0.5
D016	2,4-D (2,4-Dichlorophenoxyacetic acid)	10.0
D017	2,4,5-TP Silvex (2,4,5-Trichlorophenoxypropionic acid)	1.0

Subpart D—Lists of Hazardous Wastes

§ 261.30 General.

(a) A solid waste is a hazardous waste if it is listed in this subpart, unless it has been excluded from this list under §§ 260.20 and 260.22.

(b) The Administrator will indicate his basis for listing the classes or types of wastes listed in this Subpart by employing one or more of the following Hazard Codes:

Ignitable Waste	(I)
Corrosive Waste	(C)
Reactive Waste	(R)
EP Toxic Waste	(E)
Acute Hazardous Waste	(H)
Toxic Waste	(T)

Appendix VII identifies the constituent which caused the Administrator to list the waste as an EP Toxic Waste (E) or Toxic Waste (T) in §§ 261.31 and 261.32.

(c) Each hazardous waste listed in this subpart is assigned an EPA Hazardous Waste Number which precedes the name of the waste. This number must be used in complying with the notification requirements of Section 3010 of the Act and certain recordkeeping and reporting requirements under Parts 262 through 265 and Part 270 of this chapter.

(d) The following hazardous wastes listed in § 261.31 or § 261.32 are subject to the exclusion limits for acutely hazardous wastes established in § 261.5: EPA Hazardous Wastes Nos. FO20, FO21, FO22, FO23, FO26, and FO27

45 FR 33119, May 19, 1980, as amended at 48 FR 14294, Apr. 1, 1983, 50 FR 2000, Jan. 14, 1985]

EFFECTIVE DATE NOTE: At 50 FR 2000 Jan. 14, 1985, § 261.30(d) was revised, effective July 15, 1985. For the convenience of the user, the superseded text is set out below.

§ 261.30 General.

* * * * *

(d) The following hazardous wastes listed in § 261.31 or § 261.32 are subject to the exclusion limits for acutely hazardous wastes established in § 261.5. [Reserved]

§ 261.31 Hazardous wastes from non-specific sources.

The following solid wastes are listed hazardous wastes from non-specific sources unless they are excluded under §§ 260.20 and 260.22 and listed in Appendix IX.

Industry and EPA hazardous waste No.	Hazardous waste	Hazard code
Generic		
F001	The following spent halogenated solvents used in degreasing: tetrachloroethylene, trichloroethylene, methylene chloride, 1,1,1-trichloroethane, carbon tetrachloride, and chlorinated fluorocarbons, and sludges from the recovery of these solvents in degreasing operations.	(T)
F002	The following spent halogenated solvents: tetrachloroethylene, methylene chloride, trichloroethylene, 1,1,1-trichloroethane, chlorobenzene, 1,1,2-trichloro-1,2,2-trifluoroethane, ortho-dichlorobenzene, and trichlorofluoromethane; and the still bottoms from the recovery of these solvents.	(T)
F003	The following spent non-halogenated solvents: xylene, acetone, ethyl acetate, ethyl benzene, ethyl ether, methyl isobutyl ketone, n-butyl alcohol, cyclohexanone, and methanol; and the still bottoms from the recovery of these solvents.	(I)
F004	The following spent non-halogenated solvents: cresols and cresylic acid, and nitrobenzene; and the still bottoms from the recovery of these solvents.	(T)
F005	The following spent non-halogenated solvents: toluene, methyl ethyl ketone, carbon disulfide, isobutanol, and pyridine; and the still bottoms from the recovery of these solvents.	(I, T)
F006	Wastewater treatment sludges from electroplating operations except from the following processes: (1) sulfuric acid anodizing of aluminum; (2) tin plating on carbon steel; (3) zinc plating (segregated basis) on carbon steel; (4) aluminum or zinc-aluminum plating on carbon steel; (5) cleaning/stripping associated with tin, zinc and aluminum plating on carbon steel; and (6) chemical etching and milling of aluminum.	(T)
F019	Wastewater treatment sludges from the chemical conversion coating of aluminum.	(T)
F007	Spent cyanide plating bath solutions from electroplating operations.	(R, T)
F008	Plating bath residues from the bottom of plating baths from electroplating operations where cyanides are used in the process.	(R, T)
F009	Spent stripping and cleaning bath solutions from electroplating operations where cyanides are used in the process.	(R, T)
F010	Quenching bath residues from oil baths from metal heat treating operations where cyanides are used in the process.	(R, T)
F011	Spent cyanide solutions from salt bath pot cleaning from metal heat treating operations.	(R, T)
F012	Quenching waste water treatment sludges from metal heat treating operations where cyanides are used in the process.	(T)
F024	Wastes, including but not limited to, distillation residues, heavy ends, tars, and reactor clean-out wastes from the production of chlorinated aliphatic hydrocarbons, having carbon content from one to five, utilizing free radical catalyzed processes. [This listing does not include light ends, spent filters and filter aids, spent dessicants, wastewater, wastewater treatment sludges, spent catalysts, and wastes listed in § 261.32.]	(T)
F020	Wastes (except wastewater and spent carbon from hydrogen chloride purification) from the production or manufacturing use (as a reactant, chemical intermediate, or component in a formulating process) of tri- or tetrachlorophenol, or of intermediates used to produce their pesticide derivatives. (This listing does not include wastes from the production of Hexachlorophene from highly purified 2,4,5-trichlorophenol.)	(H)
F021	Wastes (except wastewater and spent carbon from hydrogen chloride purification) from the production or manufacturing use (as a reactant, chemical intermediate, or component in a formulating process) of pentachlorophenol, or of intermediates used to produce its derivatives.	(H)

Industry and EPA hazardous waste No	Hazardous waste	Hazard code
F020	Wastes (except wastewater and spent carbon from hydrogen chloride purification) from the manufacturing use (as a reactant chemical intermediate or component in a formulating process) of tetra- penta- or hexachlorobenzenes under alkaline conditions	(H)
F021	Wastes (except wastewater and spent carbon from hydrogen chloride purification) from the production of materials on equipment previously used for the production or manufacturing use (as a reactant chemical intermediate or component in a formulating process) of tri- and tetrachlorophenols (This listing does not include wastes from equipment used only for the production or use of Hexachlorophene from highly purified 2 4 5-trichlorophenol.)	(H)
F022	Wastes (except wastewater and spent carbon from hydrogen chloride purification) from the production of materials on equipment previously used for the manufacturing use (as a reactant chemical intermediate or component in a formulating process) of tetra- penta- or hexachlorobenzene under alkaline conditions	(H)
F023	Discarded unused formulations containing tri- tetra- or pentachlorophenol or discarded unused formulations containing compounds derived from these chlorophenols (This listing does not include formulations containing Hexachlorophene synthesized from prepurified 2 4 5-trichlorophenol as the sole component.)	(H)
F028	Residues resulting from the incineration or thermal treatment of soil contaminated with EPA Hazardous Waste Nos F020 F021, F022 F023 F026 and F027	(T)

[46 FR 4617, Jan 16, 1981, as amended at 46 FR 27477, May 20, 1981, 49 FR 5312, Feb 10, 1984 49 FR 37070, Sept. 21, 1984, 50 FR 665, Jan. 4, 1985, 50 FR 2000, Jan 14, 1985]

EFFECTIVE DATE NOTE At 50 FR 665, Jan. 4, 1985, the hazardous waste listings for F007 F008 F009, F010, F011, and F012 were revised, effective July 5, 1985 At 50 FR 2000, Jan 14, 1985, the hazardous waste listings for F020, F021, F022, F023, F026, F027, and F028 were added, effective July 15, 1985. For the convenience of the user, the superseded text is set out below:

§ 261.31 Hazardous wastes from non-specific sources.

Industry and EPA hazardous waste No	Hazardous waste	Hazard code
* * * * *		
F007	Spent cyanide plating bath solutions from electroplating operations (except for precious metals electroplating spent cyanide plating bath solutions)	(R T)
F008	Plating bath sludges from the bottom of plating baths from electroplating operations where cyanides are used in the process (except for precious metals electroplating plating bath sludges)	(R T)
F009	Spent stripping and cleaning bath solutions from electroplating operations where cyanides are used in the process (except for precious metals electroplating spent stripping and cleaning bath solutions)	(R T)
F010	Quenching bath sludge from oil baths from metal heat treating operations where cyanides are used in the process (except for precious metals heat-treating quenching bath sludges)	(R T)
F011	Spent cyanide solutions from salt bath pot cleaning from metal heat treating operations (except for precious metals heat treating spent cyanide solutions from salt bath pot cleaning)	(R T)
F012	Quenching wastewater treatment sludges from metal heat treating operations where cyanides are used in the process (except for precious metals heat treating quenching wastewater treatment sludges)	(T)
* * * * *		

§ 261.32 Hazardous wastes from specific sources.

The following solid wastes are listed hazardous wastes from specific sources unless they are excluded under §§ 260.20 and 260.22 and listed in Appendix IX.

Industry and EPA hazardous waste No	Hazardous waste	Hazard code
K001	Bottom sediment sludge from the treatment of wastewaters from wood preserving processes that use creosote and/or pentachlorophenol	T

Industry and EPA hazardous waste No.	Hazardous waste	Hazard code
Inorganic pigments.		
K002	Wastewater treatment sludge from the production of chrome yellow and orange pigments	T
K003	Wastewater treatment sludge from the production of molybdate orange pigments	T
K004	Wastewater treatment sludge from the production of zinc yellow pigments	T
K005	Wastewater treatment sludge from the production of chrome green pigments	T
K006	Wastewater treatment sludge from the production of chrome oxide green pigments (anhydrous and hydrated)	T
K007	Wastewater treatment sludge from the production of iron blue pigments	T
K008	Oven residue from the production of chrome oxide green pigments	T
Organic chemicals.		
K009	Distillation bottoms from the production of acetaldehyde from ethylene	T
K010	Distillation side cuts from the production of acetaldehyde from ethylene	T
K011	Bottom stream from the wastewater stripper in the production of acrylonitrile	R, T
K013	Bottom stream from the acetonitrile column in the production of acrylonitrile	R, T
K014	Bottoms from the acetonitrile purification column in the production of acrylonitrile	T
K015	Still bottoms from the distillation of benzyl chloride	T
K016	Heavy ends or distillation residues from the production of carbon tetrachloride	T
K017	Heavy ends (still bottoms) from the purification column in the production of epichlorohydrin	T
K018	Heavy ends from the fractionation column in ethyl chloride production	T
K019	Heavy ends from the distillation of ethylene dichloride in ethylene dichloride production.	T
K020	Heavy ends from the distillation of vinyl chloride in vinyl chloride monomer production	T
K021	Aqueous spent antimony catalyst waste from fluoromethanes production	T
K022	Distillation bottom tars from the production of phenol/acetone from cumene	T
K023	Distillation light ends from the production of phthalic anhydride from naphthalene	T
K024	Distillation bottoms from the production of phthalic anhydride from naphthalene	T
K093	Distillation light ends from the production of phthalic anhydride from ortho-xylene	T
K094	Distillation bottoms from the production of phthalic anhydride from ortho-xylene	T
K025	Distillation bottoms from the production of nitrobenzene by the nitration of benzene	T
K026	Stripping still tails from the production of methy ethyl pyridines	T
K027	Centrifuge and distillation residues from toluene diisocyanate production	R, T
K028	Spent catalyst from the hydrochlorinator reactor in the production of 1,1,1-trichloroethane	T
K029	Waste from the product steam stripper in the production of 1,1,1-trichloroethane	T
K095	Distillation bottoms from the production of 1,1,1-trichloroethane	T
K096	Heavy ends from the heavy ends column from the production of 1,1,1 trichloroethane.	T
K030	Column bottoms or heavy ends from the combined production of trichloroethylene and perchloroethylene	T
K083	Distillation bottoms from aniline production	T
K103	Process residues from aniline extraction from the production of aniline	T
K104	Combined wastewater streams generated from nitrobenzene/aniline production	T
K085	Distillation or fractionation column bottoms from the production of chlorobenzenes	T
K105	Separated aqueous stream from the reactor product washing step in the production of chlorobenzenes.	T
Inorganic chemicals:		
K071	Brine purification muds from the mercury cell process in chlorine production where separately prepurified brine is not used	T
K073	Chlorinated hydrocarbon waste from the purification step of the diaphragm cell process using graphite anodes in chlorine production	T
K106	Wastewater treatment sludge from the mercury cell process in chlorine production	T
Pesticides.		
K031	By-product salts generated in the production of MSMA and cacodylic acid	T
K032	Wastewater treatment sludge from the production of chlordane	T
K033	Wastewater and scrub water from the chlorination of cyclopentadiene in the production of chlordane	T
K034	Filter solids from the filtration of hexachlorocyclopentadiene in the production of chlordane	T
K097	Vacuum stripper discharge from the chlordane chlorinator in the production of chlordane	T
K035	Wastewater treatment sludges generated in the production of creosote	T
K036	Still bottoms from toluene reclamation distillation in the production of disulfoton	T
K037	Wastewater treatment sludges from the production of disulfoton	T
K038	Wastewater from the washing and stripping of phorate production	T
K039	Filter cake from the filtration of diethylphosphorodithioic acid in the production of phorate	T
K040	Wastewater treatment sludge from the production of phorate	T
K041	Wastewater treatment sludge from the production of toxaphene	T
K098	Untreated process wastewater from the production of toxaphene	T

and EPA hazardous waste No	Hazardous waste	Hazard code
	Heavy ends or distillation residues from the distillation of tetrachlorobenzene in the production of 2 4 5 T	(T)
	2,6-Dichlorophenol waste from the production of 2 4-D	(T)
	Untreated wastewater from the production of 2 4-D	(T)
	Wastewater treatment sludges from the manufacturing and processing of explosives	(R)
	Spent carbon from the treatment of wastewater containing explosives	(R)
	Wastewater treatment sludges from the manufacturing formulation and loading of lead-based initiating compounds	(T)
	Pink/red water from TNT operations	(R)
refining	Dissolved air flotation (DAF) float from the petroleum refining industry	(T)
	Slop oil emulsion solids from the petroleum refining industry	(T)
	Heat exchanger bundle cleaning sludge from the petroleum refining industry	(T)
	API separator sludge from the petroleum refining industry	(T)
	Tank bottoms (leaded) from the petroleum refining industry	(T)
and steel	Emission control dust sludge from the primary production of steel in electric furnaces	(T)
	Spent pickle liquor from steel finishing operations	(C T)
lead	Emission control dust/sludge from secondary lead smelting	(T)
	Waste leaching solution from acid leaching of emission control dust/sludge from secondary lead smelting	(T)
pharmaceuticals	Wastewater treatment sludges generated during the production of veterinary pharmaceuticals from arsenic or organo-arsenic compounds	(T)
	Distillation tar residues from the distillation of aniline-based compounds in the production of veterinary pharmaceuticals from arsenic or organo-arsenic compounds	(T)
	Residue from the use of activated carbon for decolorization in the production of veterinary pharmaceuticals from arsenic or organo-arsenic compounds	(T)
formulation K086	Solvent washes and sludges caustic washes and sludges or water washes and sludges from cleaning tubs and equipment used in the formulation of ink from pigments driers soaps and stabilizers containing chromium and lead	(T)
	Ammonia still lime sludge from coking operations	(T)
	Decanter tank tar sludge from coking operations	(T)

[46 FR 4618, Jan. 16, 1981, as amended at 46 FR 27476-27477, May 20, 1981; 49 FR 37070, Sept. 21 1984]

§ 261.33 Discarded commercial chemical products, off-specification species, container residues, and spill residues thereof.

The following materials or items are hazardous wastes when they are discarded or intended to be discarded as described in § 261.2(a)(2)(i), when they are burned for purposes of energy recovery in lieu of their original intended use, when they are used to produce fuels in lieu of their original intended use, when they are applied to the land in lieu of their original intended use, or when they are contained in products that are applied to the land in lieu of their original intended use.

(a) Any commercial chemical product or manufacturing chemical intermediate having the generic name listed in paragraph (e) or (f) of this section.

(b) Any off-specification commercial chemical product or manufacturing chemical intermediate which, if it met specifications, would have the generic name listed in paragraph (e) or (f) of this section.

(c) Any container or inner liner removed from a container that has been used to hold any commercial chemical product or manufacturing chemical intermediate having the generic names listed in paragraph (e) of this section, or any container or inner liner removed from a container that has been used to hold any off-specification chemical product and manufacturing chemical intermediate which, if it met specifications, would have the generic name listed in paragraph (e) of this

section, unless the container is empty as defined in § 261.7(b)(3) of this chapter.

[*Comment.* Unless the residue is being beneficially used or reused, or legitimately recycled or reclaimed; or being accumulated, stored, transported or treated prior to such use, re-use, recycling or reclamation, EPA considers the residue to be intended for discard, and thus a hazardous waste. An example of a legitimate re-use of the residue would be where the residue remains in the container and the container is used to hold the same commerical chemical product or manufacturing chemical product or manufacturing chemical intermediate it previously held. An example of the discard of the residue would be where the drum is sent to a drum reconditioner who reconditions the drum but discards the residue.]

(d) Any residue or contaminated soil, water or other debris resulting from the cleanup of a spill into or on any land or water of any commercial chemical product or manufacturing chemical intermediate having the generic name listed in paragraph (e) or (f) of this section, or any residue or contaminated soil, water or other debris resulting from the cleanup of a spill, into or on any land or water, of any off-specification chemical product and manufacturing chemical intermediate which, if it met specifications, would have the generic name listed in paragraph (e) or (f) of this section.

[*Comment:* The phrase "commercial chemical product or manufacturing chemical intermediate having the generic name listed in . . ." refers to a chemical substance which is manufactured or formulated for commercial or manufacturing use which consists of the commercially pure grade of the chemical, any technical grades of the chemical that are produced or marketed, and all formulations in which the chemical is the sole active ingredient. It does not refer to a material, such as a manufacturing process waste, that contains any of the substances listed in paragraphs (e) or (f). Where a manufacturing process waste is deemed to be a hazardous waste because it contains a substance listed in paragraphs (e) or (f), such waste will be listed in either §§ 261.31 or 261.32 or will be identified as a hazardous waste by the characteristics set forth in Subpart C of this part.]

(e) The commercial chemical products, manufacturing chemical intermediates or off-specification commercial chemical products or manufacturing chemical intermediates referred to in paragraphs (a) through (d) of this section, are identified as acute hazardous wastes (H) and are subject to the small quantity exclusion defined in § 261.5(e).

[*Comment:* For the convenience of the regulated community the primary hazardous properties of these materials have been indicated by the letters T (Toxicity), and R (Reactivity). Absence of a letter indicates that the compound only is listed for acute toxicity.]

These wastes and their corresponding EPA Hazardous Waste Numbers are:

Hazardous waste No	Substance
P023	Acetaldehyde chloro-
P002	Acetamide N-(aminothioxomethyl)-
P057	Acetamide 2-fluoro-
P058	Acetic acid, fluoro-, sodium salt
P066	Acetimidic acid, N-[(methylcarbamoyl)oxy]thio-, methyl ester
P001	3-(alpha-Acetonylbenzyl)-4-hydroxycoumarin and salts, when present at concentrations greater than 0.3%
P002	1-Acetyl-2-thiourea
P003	Acrolein
P070	Aldicarb
P004	Aldrin
P005	Allyl alcohol
P006	Aluminum phosphide
P007	5-(Aminomethyl)-3-isoxazolol
P008	4-aAminopyridine
P009	Ammonium picrate (R)
P119	Ammonium vanadate
P010	Arsenic acid
P012	Arsenic (III) oxide
P011	Arsenic (V) oxide
P011	Arsenic pentoxide
P012	Arsenic trioxide
P038	Arsine, diethyl-
P054	Aziridine
P013	Barium cyanide
P024	Benzenamine, 4-chloro-
P077	Benzenamine, 4-nitro-
P028	Benzene, (chloromethyl)-
P042	1,2-Benzenediol, 4-[1-hydroxy-2-(methylamino)ethyl]-
P014	Benzenethiol
P028	Benzyl chloride
P015	Beryllium dust
P016	Bis(chloromethyl) ether
P017	Bromoacetone
P018	Brucine
P021	Calcium cyanide
P123	Camphene, octachloro-
P103	Carbamimidoselenoic acid
P022	Carbon bisulfide
P022	Carbon disulfide
P095	Carbonyl chloride
P033	Chlorine cyanide
P023	Chloroacetaldehyde
P024	p-Chloroaniline
P026	1-(o-Chlorophenyl)thiourea
P027	3-Chloropropionitrile
P029	Copper cyanides

Hazardous waste No.	Substance
	Cyanides (soluble cyanide salts) not elsewhere specified
	Cyanogen
	Cyanogen chloride
	Dichlorophenylarsine
	Dieldrin
	Diethylarsine
	O,O-Diethyl S-[2-(ethylthio)ethyl] phosphorodithioate
	Diethyl p-nitrophenyl phosphate
	O,O-Diethyl O-pyrazinyl phosphorothioate
	Diisopropyl fluorophosphate
	Dimethoate
	3,3-Dimethyl-1-(methylthio)-2-butanone O-[(methylamino)carbonyl] oxime
	O,O-Dimethyl O-p-nitrophenyl phosphorothioate
	Dimethylnitrosamine
	alpha,alpha-Dimethylphenethylamine
	4,6-Dinitro-o-cresol and salts
	4,6-Dinitro-o-cyclohexylphenol
	2,4-Dinitrophenol
	Dinoseb
	Diphosphoramide, octamethyl-
	Disulfoton
	2,4-Dithiobiuret
	Dithiopyrophosphonic acid, tetraethyl ester
	Endosulfan
	Endothall
	Endrin
P042	Epinephrine
	Ethanamine, 1,1-dimethyl-2-phenyl-
	Ethanamine, N-methyl-N-nitroso-
	Ethyl cyanide
	Ethylenimine
	Famphur
	Fluorine
	Fluoroacetamide
	Fluoroacetic acid, sodium salt
	Fulminic acid, mercury(II) salt (R,T)
	Heptachlor
	1,2,3,4,10,10-Hexachloro-6,7-epoxy-1,4,4a,5,6,7,8,8a-octahydro-endo,endo-1,4,5,8-dimethanonaphthalene
	1,2,3,4,10,10-Hexachloro-6,7-epoxy-1,4,4a,5,6,7,8,8a-octahydro-endo,exo-1,4,5,8-dimethanonaphthalene
	1,2,3,4,10,10-Hexachloro-1,4,4a,5,8,8a-hexahydro-1,4,5,8-endo,endo-dimethanonaphthalene
	1,2,3,4,10,10-Hexachloro-1,4,4a,5,8,8a-hexahydro-1,4,5,8-endo,exo-dimethanonaphthalene
	Hexachlorohexahydro-exo,exo-dimethanonaphthalene
	Hexaethyl tetraphosphate
	Hydrazinecarbothioamide
	Hydrazine, methyl-
	Hydrocyanic acid
	Hydrogen cyanide
	Hydrogen phosphide
	Isocyanic acid, methyl ester
	3(2H)-Isoxazolone, 5-(aminomethyl)-
	Mercury, (acetato-O)phenyl-
	Mercury fulminate (R,T)
	Methane, oxybis[chloro-
	Methane, tetranitro- (R)
	Methanethiol, trichloro-
	4,7-Methano-1H-indene, 1,4,5,6,7,8,8-heptachloro-3a,4,7,7a-tetrahydro-
	Methomyl
	2-Methylaziridine
P068	Methyl hydrazine
P064	Methyl isocyanate
P069	2-Methyllactonitrile
P071	Methyl parathion
P072	alpha-Naphthylthiourea
P073	Nickel carbonyl
P074	Nickel cyanide
P074	Nickel(II) cyanide
P073	Nickel tetracarbonyl
P075	Nicotine and salts
P076	Nitric oxide
P077	p-Nitroaniline
P078	Nitrogen dioxide
P076	Nitrogen(II) oxide
P078	Nitrogen(IV) oxide
P081	Nitroglycerine (R)
P082	N-Nitrosodimethylamine
P084	N-Nitrosomethylvinylamine
P050	5-Norbornene-2,3-dimethanol, 1,4,5,6,7,7-hexachloro, cyclic sulfite
P085	Octamethylpyrophosphoramide
P087	Osmium oxide
P087	Osmium tetroxide
P088	7-Oxabicyclo[2.2.1]heptane-2,3-dicarboxylic acid
P089	Parathion
P034	Phenol, 2-cyclohexyl-4,6-dinitro-
P048	Phenol, 2,4-dinitro-
P047	Phenol, 2,4-dinitro-6-methyl-
P020	Phenol, 2,4-dinitro-6-(1-methylpropyl)-
P009	Phenol, 2,4,6-trinitro-, ammonium salt (R)
P036	Phenyl dichloroarsine
P092	Phenylmercuric acetate
P093	N-Phenylthiourea
P094	Phorate
P095	Phosgene
P096	Phosphine
P041	Phosphonic acid, diethyl p-nitrophenyl ester
P044	Phosphorodithioic acid, O,O-dimethyl S-[2-(methylamino)-2-oxoethyl] ester
P043	Phosphorofluoric acid, bis(1-methylethyl) ester
P094	Phosphorothioic acid, O,O-diethyl S-(ethylthio)methyl ester
P089	Phosphorothioic acid, O,O-diethyl O-(p-nitrophenyl) ester
P040	Phosphorothioic acid, O,O-diethyl O-pyrazinyl ester
P097	Phosphorothioic acid, O,O-dimethyl O-[p-(dimethylamino)-sulfonyl]phenyl] ester
P110	Plumbane, tetraethyl-
P098	Potassium cyanide
P099	Potassium silver cyanide
P070	Propanal, 2-methyl-2-(methylthio)-, O-[(methylamino)carbonyl]oxime
P101	Propanenitrile
P027	Propanenitrile, 3-chloro-
P069	Propanenitrile, 2-hydroxy-2-methyl-
P081	1,2,3-Propanetriol, trinitrate (R)
P017	2-Propanone, 1-bromo-
P102	Propargyl alcohol
P003	2-Propenal
P005	2-Propen-1-ol
P067	1,2-Propylenimine
P102	2-Propyn-1-ol
P008	4-Pyridinamine
P075	Pyridine, (S)-3-(1-methyl-2-pyrrolidinyl)-, and salts
P111	Pyrophosphoric acid, tetraethyl ester
P103	Selenourea
P104	Silver cyanide
P105	Sodium azide

Hazardous waste No	Substance
P106	Sodium cyanide
P107	Strontium sulfide
P108	Strychnidin-10-one, and salts
P018	Strychnidin-10-one, 2,3-dimethoxy-
P108	Strychnine and salts
P115	Sulfuric acid, thallium(I) salt
P109	Tetraethyldithiopyrophosphate
P110	Tetraethyl lead
P111	Tetraethylpyrophosphate
P112	Tetranitromethane (R)
P062	Tetraphosphonic acid, hexaethyl ester
P113	Thallic oxide
P113	Thallium(III) oxide
P114	Thallium(I) selenite
P115	Thallium(I) sulfate
P045	Thiofanox
P049	Thioimidodicarbonic diamide
P014	Thiophenol
P116	Thiosemicarbazide
P026	Thiourea, (2-chlorophenyl)-
P072	Thiourea, 1-naphthalenyl-
P093	Thiourea, phenyl-
P123	Toxaphene
P118	Trichloromethanethiol
P119	Vanadic acid, ammonium salt
P120	Vanadium pentoxide
P120	Vanadium(V) oxide
P001	Warfarin, when present at concentrations greater than 0.3%
P121	Zinc cyanide
P122	Zinc phosphide (R,T)
P122	Zinc phosphide, when present at concentrations greater than 10%

(f) The commercial chemical products, manufacturing chemical intermediates, or off-specification commercial chemical products referred to in paragraphs (a) through (d) of this section, are identified as toxic wastes (T) unless otherwise designated and are subject to the small quantity exclusion defined in § 261.5 (a) and (f).

[*Comment:* For the convenience of the regulated community, the primary hazardous properties of these materials have been indicated by the letters T (Toxicity), R (Reactivity), I (Ignitability) and C (Corrosivity). Absence of a letter indicates that the compound is only listed for toxicity.]

These wastes and their corresponding EPA Hazardous Waste Numbers are:

Hazardous Waste No	Substance
U001	Acetaldehyde (I)
U034	Acetaldehyde, trichloro-
U187	Acetamide, N-(4-ethoxyphenyl)-
U005	Acetamide, N-9H-fluoren-2-yl-
U112	Acetic acid, ethyl ester (I)
U144	Acetic acid, lead salt
U214	Acetic acid, thallium(I) salt
U002	Acetone (I)
U003	Acetonitrile (I,T)
U248	2H-1-Benzopyran-2-one, 4-hydroxy-3-(3-oxo-1-phenylbutyl)-, and salts, when present at concentrations of 0.3% or less
U004	Acetophenone
U005	2-Acetylaminofluorene
U006	Acetyl chloride (C,R,T)
U007	Acrylamide
U008	Acrylic acid (I)
U009	Acrylonitrile
U150	Alanine, 3-[p-bis(2-chloroethyl)amino]-phenyl-, L-
U011	Amitrole
U012	Aniline (I,T)
U014	Auramine
U015	Azaserine
U010	Azirino[2',3':3,4]pyrrolo[1,2-a]indole-4,7-dione, 6-amino-8-[[(aminocarbonyl)oxy]methyl]-1,1a,2,8,8a,8b-hexahydro-8a-methoxy-5-methyl-,
U157	Benz[j]aceanthrylene, 1,2-dihydro-3-methyl-
U016	Benz[c]acridine
U016	3,4-Benzacridine
U017	Benzal chloride
U018	Benz[a]anthracene
U018	1,2-Benzanthracene
U094	1,2-Benzanthracene, 7,12-dimethyl-
U012	Benzenamine (I,T)
U014	Benzenamine, 4,4'-carbonimidoylbis[N,N-di-methyl-
U049	Benzenamine, 4-chloro-2-methyl-
U093	Benzenamine, N,N-dimethyl-4-phenylazo-
U158	Benzenamine, 4,4'-methylenebis[2-chloro-
U222	Benzenamine, 2-methyl-, hydrochloride
U181	Benzenamine, 2-methyl-5-nitro-
U019	Benzene (I,T)
U038	Benzeneacetic acid, 4-chloro-alpha-(4-chlorophenyl)-alpha-hydroxy-, ethyl ester
U030	Benzene, 1-bromo-4-phenoxy-
U037	Benzene, chloro-
U190	1,2-Benzenedicarboxylic acid, anhydride
U028	1,2-Benzenedicarboxylic acid, bis(2-ethylhexyl) ester
U069	1,2-Benzenedicarboxylic acid, dibutyl ester
U088	1,2-Benzenedicarboxylic acid, diethyl ester
U102	1,2-Benzenedicarboxylic acid, dimethyl ester
U107	1,2-Benzenedicarboxylic acid, dioctyl ester
U070	Benzene, 1,2-dichloro-
U071	Benzene, 1,3-dichloro-
U072	Benzene, 1,4-dichloro-
U017	Benzene, (dichloromethyl)-
U223	Benzene, 1,3-diisocyanatomethyl- (R,T)
U239	Benzene, dimethyl- (I,T)
U201	1,3-Benzenediol
U127	Benzene, hexachloro-
U056	Benzene, hexahydro- (I)
U168	Benzene, hydroxy-
U220	Benzene, methyl-
U105	Benzene, 1-methyl-2,4-dinitro-
U106	Benzene, 1-methyl-2,6-dinitro-
U203	Benzene, 1,2-methylenedioxy-4-allyl-
U141	Benzene, 1,2-methylenedioxy-4-propenyl-
U090	Benzene, 1,2-methylenedioxy-4-propyl-
U055	Benzene, (1-methylethyl)- (I)
U169	Benzene, nitro- (I,T)
U183	Benzene, pentachloro-
U185	Benzene, pentachloro-nitro-
U020	Benzenesulfonic acid chloride (C,R)
U020	Benzenesulfonyl chloride (C,R)
U207	Benzene, 1,2,4,5-tetrachloro-
U023	Benzene, (trichloromethyl)- (C,R,T)

Hazardous Waste No	Substance	Hazardous Waste No	Substance
	Benzene 1 3 5 trinitro (R T)	U060	DDD
	Benzidine	U061	DDT
	1 2 Benzisothiazolin 3-one 1 1-dioxide	U142	Decachlorooctahydro 1 3 4-metheno 2H cyclobuta[c d] pentalen 2 one
	Benzo[j k]fluorene	U063	Dieldrin
	Benzo[a]pyrene	U133	Diamine (R T)
	3 4 Benzopyrene	U221	Diaminotoluene
	p-Benzoquinone	U063	Dibenz[a h]anthracene
	Benzotrichloride (C R T)	U063	1 2 5 6 Dibenzanthracene
	1 2 Benzphenanthrene	U064	1 2 7 8-Dibenzopyrene
	2 2-Bioxirane (I T)	U064	Dibenz[a i]pyrene
	[1 1 -Biphenyl]-4 4 -diamine	U066	1 2-Dibromo-3-chloropropane
	[1 1 -Biphenyl]-4 4 -diamine 3 3 -dichloro	U069	Dibutyl phthalate
	[1 1 Biphenyl]-4 4 -diamine 3 3 -dimethoxy	U062	S-(2 3-Dichloroallyl) di isopropylthiocarbamate
	[1 1 Biphenyl]-4 4 -diamine 3 3 -dimethyl	U070	o-Dichlorobenzene
	Bis(2-chloroethoxy) methane	U071	m-Dichlorobenzene
	Bis(2-chloroisopropyl) ether	U072	p-Dichlorobenzene
	Bis(dimethylthiocarbamoyl) disulfide	U073	3 3 -Dichlorobenzidine
	Bis(2-ethylhexyl) phthalate	U074	1 4-Dichloro-2-butene (I T)
	Bromine cyanide	U075	Dichlorodifluoromethane
	Bromoform	U192	3 5-Dichloro N-(1 1-dimethyl-2-propynyl) benzamide
	4-Bromophenyl phenyl ether	U060	Dichloro diphenyl dichloroethane
	1 3-Butadiene 1 1 2 3 4 4-hexachloro	U061	Dichloro diphenyl trichloroethane
	1-Butanamine N-butyl-N nitroso	U078	1 1 Dichloroethylene
	Butanoic acid 4 [Bis(2-chloroethyl)amino] benzene	U079	1,2-Dichloroethylene
	1-Butanol (I)	U025	Dichloroethyl ether
	2-Butanone (I T)	U081	2 4-Dichlorophenol
	2-Butanone peroxide (R T)	U082	2 6-Dichlorophenol
	2 Butenal	U240	2 4-Dichlorophenoxyacetic acid salts and esters
	2-Butene 1 4-dichloro- (I T)		
	n-Butyl alcohol (I)		
	Cacodylic acid	U083	1,2-Dichloropropane
	Calcium chromate	U084	1,3-Dichloropropene
	Carbamic acid ethyl ester	U085	1 2 3 4-Diepoxybutane (I T)
	Carbamic acid methylnitroso- ethyl ester	U108	1 4-Diethylene dioxide
	Carbamide N-ethyl-N-nitroso-	U086	N,N-Diethylhydrazine
	Carbamide N-methyl-N-nitroso	U087	O O-Diethyl-S-methyl-dithiophosphate
	Carbamide thio-	U088	Diethyl phthalate
	Carbamoyl chloride dimethyl	U089	Diethylstilbestrol
	Carbonic acid dithallium(I) salt	U148	1,2-Dihydro-3 6-pyridazinedione
	Carbonochloridic acid methyl ester (I T)	U090	Dihydrosafrole
	Carbon oxyfluoride (R T)	U091	3 3 -Dimethoxybenzidine
	Carbon tetrachloride	U092	Dimethylamine (I)
	Carbonyl fluoride (R T)	U093	Dimethylaminoazobenzene
	Chloral	U094	7 12-Dimethylbenz[a]anthracene
	Chlorambucil	U095	3 3 -Dimethylbenzidine
	Chlordane technical	U096	alpha,alpha-Dimethylbenzylhydroperoxide (R
	Chlornaphazine	U097	Dimethylcarbamoyl chloride
	Chlorobenzene	U098	1 1-Dimethylhydrazine
	4-Chloro-m-cresol	U099	1,2-Dimethylhydrazine
	1-Chloro-2,3-epoxypropane	U101	2 4-Dimethylphenol
	2-Chloroethyl vinyl ether	U102	Dimethyl phthalate
	Chloroform	U103	Dimethyl sulfate
	Chloromethyl methyl ether	U105	2 4-Dinitrotoluene
	beta Chloronaphthalene	U106	2 6 Dinitrotoluene
	o-Chlorophenol	U107	Di-n-octyl phthalate
	4-Chloro-o-toluidine hydrochloride	U108	1 4 Dioxane
	Chromic acid calcium salt	U109	1 2 Diphenylhydrazine
	Chrysene	U110	Dipropylamine (I)
	Creosote	U111	Di-n-propylnitrosamine
	Cresols	U001	Ethanal (I)
	Cresylic acid	U174	Ethanamine N-ethyl-N-nitroso
	Crotonaldehyde	U067	Ethane 1 2-dibromo-
	Cumene (I)	U076	Ethane 1 1-dichloro
	Cyanogen bromide	U077	Ethane 1 2-dichloro-
	4 Cyclohexadienedione	U114	1 2-Ethanediylbiscarbamodithioic acid
	Cyclohexane (I)	U131	Ethane 1 1 1 2 2 2-hexachloro
	Cyclohexanone (I)	U024	Ethane 1 1 [methylenebis(oxy)]bis[2-chloro-
	3 Cyclopentadiene 1 2 3 4 5 5-hexachloro	U055	Ethanenitrile (I T)
	Cyclophosphamide	U117	Ethane 1 1 oxybis (I)
	2 4-D salts and esters	U025	Ethane 1 1 oxybis[2-chloro-
	Daunomycin	U184	Ethane pentachloro

Hazardous Waste No	Substance
U208	Ethane 1 1 1 2 tetrachloro-
U209	Ethane 1 1 2 2 tetrachloro-
U218	Ethanethioamide
U247	Ethane 1 1 1 trichloro-2 2 bis(p-methoxyphenyl)
U227	Ethane 1 1 2 trichloro-
U043	Ethene chloro-
U042	Ethene 2-chloroethoxy-
U078	Ethene 1 1 dichloro-
U079	Ethene trans-1 2-dichloro-
U210	Ethene 1 1 2 2 tetrachloro-
U173	Ethanol 2 2 (nitrosoimino)bis-
U004	Ethanone 1-phenyl-
U006	Ethanoyl chloride (C,R T)
U112	Ethyl acetate (I)
U113	Ethyl acrylate (I)
U238	Ethyl carbamate (urethan)
U038	Ethyl 4 4 -dichlorobenzilate
U114	Ethylenebis(dithiocarbamic acid)
U067	Ethylene dibromide
U077	Ethylene dichloride
U115	Ethylene oxide (I T)
U116	Ethylene thiourea
U117	Ethyl ether (I)
U076	Ethylidene dichloride
U118	Ethylmethacrylate
U119	Ethyl methanesulfonate
U139	Ferric dextran
U120	Fluoranthene
U122	Formaldehyde
U123	Formic acid (C,T)
U124	Furan (I)
U125	2-Furancarboxaldehyde (I)
U147	2 5-Furandione
U213	Furan tetrahydro- (I)
U125	Furfural (I)
U124	Furfuran (I)
U206	D-Glucopyranose, 2-deoxy-2(3-methyl-3-nitrosoureido)-
U126	Glycidylaldehyde
U163	Guanidine N-nitroso-N-methyl-N nitro-
U127	Hexachlorobenzene
U128	Hexachlorobutadiene
U129	Hexachlorocyclohexane (gamma isomer)
U130	Hexachlorocyclopentadiene
U131	Hexachloroethane
U132	Hexachlorophene
U243	Hexachloropropene
U133	Hydrazine (R,T)
U086	Hydrazine 1,2-diethyl-
U098	Hydrazine 1,1-dimethyl-
U099	Hydrazine 1 2-dimethyl-
U109	Hydrazine 1 2-diphenyl-
U134	Hydrofluoric acid (C,T)
U134	Hydrogen fluoride (C,T)
U135	Hydrogen sulfide
U096	Hydroperoxide, 1-methyl-1-phenylethyl- (R)
U136	Hydroxydimethylarsine oxide
U116	2 Imidazolidinethione
U137	Indeno(1 2 3-cd)pyrene
U139	Iron dextran
U140	Isobutyl alcohol (I,T)
U141	Isosafrole
U142	Kepone
U143	Lasiocarpine
U144	Lead acetate
U145	Lead phosphate
U146	Lead subacetate
U129	Lindane
U147	Maleic anhydride
U148	Maleic hydrazide
U149	Malononitrile
U150	Melphalan
U151	Mercury
U152	Methacrylonitrile (I T)
U092	Methanamine N-methyl- (I)
U029	Methane bromo-
U045	Methane chloro- (I T)
U046	Methane chloromethoxy-
U068	Methane dibromo-
U080	Methane dichloro-
U075	Methane dichlorodifluoro-
U138	Methane iodo-
U119	Methanesulfonic acid ethyl ester
U211	Methane tetrachloro-
U121	Methane trichlorofluoro-
U153	Methanethiol (I T)
U225	Methane, tribromo-
U044	Methane trichloro-
U121	Methane, trichlorofluoro-
U123	Methanoic acid (C,T)
U036	4 7 Methanoindan 1 2 4 5 6 7 8 8 octachloro-3a,4,7 7a-tetrahydro-
U154	Methanol (I)
U155	Methapyrilene
U247	Methoxychlor
U154	Methyl alcohol (I)
U029	Methyl bromide
U186	1-Methylbutadiene (I)
U045	Methyl chloride (I T)
U156	Methyl chlorocarbonate (I T)
U226	Methylchloroform
U157	3-Methylcholanthrene
U158	4 4 -Methylenebis(2-chloroaniline)
U132	2,2'-Methylenebis(3 4 6-trichlorophenol)
U068	Methylene bromide
U080	Methylene chloride
U122	Methylene oxide
U159	Methyl ethyl ketone (I,T)
U160	Methyl ethyl ketone peroxide (R T)
U138	Methyl iodide
U161	Methyl isobutyl ketone (I)
U162	Methyl methacrylate (I T)
U163	N-Methyl-N -nitro-N-nitrosoguanidine
U161	4 Methyl-2 pentanone (I)
U164	Methylthiouracil
U010	Mitomycin C
U059	5 12-Naphthacenedione, (8S-cis)-8 acetyl [(3 amino-2 3 6-trideoxy-alpha-L-lyxo-hexopyranosyl)oxy]-7 8 9 10-tetrahydro-6 8 11-trihydroxy-1-methoxy-
U165	Naphthalene
U047	Naphthalene 2-chloro-
U166	1 4-Naphthalenedione
U236	2 7 Naphthalenedisulfonic acid 3 3 [3 3 methyl-(1 1 biphenyl)-4 4 diyl] bis (azo)bis(5-amino-4-hydroxy)- tetrasodium salt
U166	1 4 Naphthaquinone
U167	1 Naphthylamine
U168	2 Naphthylamine
U167	alpha-Naphthylamine
U168	beta-Naphthylamine
U026	2 Naphthylamine N N bis(2 chloroethyl)
U169	Nitrobenzene (I,T)
U170	p-Nitrophenol
U171	2 Nitropropane (I)
U172	N-Nitrosodi-n-butylamine
U173	N Nitrosodiethanolamine
U174	N-Nitrosodiethylamine
U111	N-Nitroso-N-propylamine
U176	N Nitroso-N-ethylurea
U177	N Nitroso-N-methylurea
U178	N Nitroso-N-methylurethane

Hazardous Waste No	Substance
U179	N-Nitrosopiperidine
U180	N-Nitrosopyrrolidine
U181	5-Nitro-o-toluidine
U193	1,2-Oxathiolane, 2,2-dioxide
U058	2H-1,3,2-Oxazaphosphorine, 2-[bis(2-chloroethyl)amino]tetrahydro-, oxide 2-
U115	Oxirane (I,T)
U041	Oxirane, 2-(chloromethyl)-
U182	Paraldehyde
U183	Pentachlorobenzene
U184	Pentachloroethane
U185	Pentachloronitrobenzene
See F027	Pentachlorophenol
U186	1,3-Pentadiene (I)
U187	Phenacetin
U188	Phenol
U048	Phenol, 2-chloro-
U039	Phenol, 4-chloro-3-methyl-
U081	Phenol, 2,4-dichloro-
U082	Phenol, 2,6-dichloro-
U101	Phenol, 2,4-dimethyl-
U170	Phenol, 4-nitro-
See F027	Phenol, pentachloro-
Do	Phenol, 2,3,4,6-tetrachloro-
Do	Phenol, 2,4,5-trichloro-
Do	Phenol, 2,4,6-trichloro-
U137	1,10-(1,2-phenylene)pyrene
U145	Phosphoric acid, Lead salt
U087	Phosphorodithioic acid, 0,0-diethyl-, S-methyl ester
U189	Phosphorous sulfide (R)
U190	Phthalic anhydride
U191	2-Picoline
U192	Pronamide
U194	1-Propanamine (I,T)
U110	1-Propanamine, N-propyl- (I)
U066	Propane, 1,2-dibromo-3-chloro-
U149	Propanedinitrile
U171	Propane, 2-nitro- (I)
U027	Propane, 2,2'-oxybis(2-chloro-
U193	1,3-Propane sultone
U235	1-Propanol, 2,3-dibromo-, phosphate (3:1)
U126	1-Propanol, 2,3-epoxy-
U140	1-Propanol, 2-methyl- (I,T)
U002	2-Propanone (I)
U007	2-Propenamide
U084	Propene, 1,3-dichloro-
U243	1-Propene, 1,1,2,3,3,3-hexachloro-
U009	2-Propenenitrile
U152	2-Propenenitrile, 2-methyl- (I,T)
U008	2-Propenoic acid (I)
U113	2-Propenoic acid, ethyl ester (I)
U118	2-Propenoic acid, 2-methyl-, ethyl ester
U162	2-Propenoic acid, 2-methyl-, methyl ester (I,T)
See F027	Propanoic acid, 2-(2,4,5-trichlorophenoxy)-
U194	n-Propylamine (I,T)
U083	Propylene dichloride
U196	Pyridine
U155	Pyridine, 2-[(2-(dimethylamino)-2-thenylamino]-
U179	Pyridine, hexahydro-N-nitroso-
U191	Pyridine, 2-methyl-
U164	4(1H)-Pyrimidinone, 2,3-dihydro-6-methyl-2-thioxo-
U180	Pyrrole, tetrahydro-N-nitroso-
U200	Reserpine
U201	Resorcinol
U202	Saccharin and salts
U203	Safrole
U204	Selenious acid
U204	Selenium dioxide
U205	Selenium disulfide (R,T)
U015	L-Serine, diazoacetate (ester)
See F027	Silvex
U089	4,4'-Stilbenediol, alpha,alpha'-diethyl-
U206	Streptozotocin
U135	Sulfur hydride
U103	Sulfuric acid, dimethyl ester
U189	Sulfur phosphide (R)
U205	Sulfur selenide (R,T)
See F027	2,4,5-T
U207	1,2,4,5-Tetrachlorobenzene
U208	1,1,1,2-Tetrachloroethane
U209	1,1,2,2-Tetrachloroethane
U210	Tetrachloroethylene
See F027	2,3,4,6-Tetrachlorophenol
U213	Tetrahydrofuran (I)
U214	Thallium(I) acetate
U215	Thallium(I) carbonate
U216	Thallium(I) chloride
U217	Thallium(I) nitrate
U218	Thioacetamide
U153	Thiomethanol (I,T)
U219	Thiourea
U244	Thiram
U220	Toluene
U221	Toluenediamine
U223	Toluene diisocyanate (R,T)
U222	O-Toluidine hydrochloride
U011	1H-1,2,4-Triazol-3-amine
U226	1,1,1-Trichloroethane
U227	1,1,2-Trichloroethane
U228	Trichloroethene
U228	Trichloroethylene
U121	Trichloromonofluoromethane
See F027	2,4,5-Trichlorophenol
Do	2,4,6-Trichlorophenol
Do	2,4,5-Trichlorophenoxyacetic acid
U234	sym-Trinitrobenzene (R,T)
U182	1,3,5-Trioxane, 2,4,6-trimethyl-
U235	Tris(2,3-dibromopropyl) phosphate
U236	Trypan blue
U237	Uracil, 5[bis(2-chloroethyl)amino]-
U237	Uracil mustard
U043	Vinyl chloride
U248	Warfarin, when present at concentrations of 0.3% or less
U239	Xylene (I)
U200	Yohimban-16-carboxylic acid, 11,17-dimethoxy-18-[(3,4,5-trimethoxybenzoyl)oxy]-, methyl ester
U249	Zinc phosphide, when present at concentrations of 10% or less.

[45 FR 78529, 78541, Nov. 25, 1980, as amended at 46 FR 27477, May 20, 1981; 49 FR 19923, May 10, 1984; 49 FR 665, Jan. 4, 1985; 50 FR 2000, Jan. 14, 1985]

EFFECTIVE DATE NOTE: At 50 FR 665, Jan. 4, 1985, § 261.33 introductory text was revised, effective July 5, 1985. At 50 FR 2000, Jan. 14, 1985, the table in paragraph (f) was amended by revising certain hazardous waste numbers, effective July 15, 1985. For the convenience of the user, the superseded introductory text (published at 49 FR 37070, Sept. 21, 1984), and entries in the paragraph (f) table, are set out below:

53-127 O—84——11

§ 261.33 Discarded commercial chemical products, off-specification species, container residues and spill residues thereof.

The following materials or items are hazardous wastes if and when they are discarded or intended to be discarded unless they are excluded under §§ 260.20 and 260.22 and listed in Appendix IX.

* * * * *

(f) * * *

Hazardous waste No	Substance
*	* * * * *
U242	Pentachlorophenol.
*	* * * * *
U242	Phenol, pentachloro-
U212	Phenol, 2,3,4,6-tetrachloro-
U212	Phenol, 2,4,5-trichloro-
U230	Phenol, 2,4,6-trichloro-
*	* * * * *
U231	Propanoic acid, 2-(2,4,5-trichlorophenoxy)-
*	* * * * *
U233	Silvex.
*	* * * * *
U232	2,4,5-T
*	* * * * *
U212	2,3,4,6-Tetrachlorophenol
*	* * * * *
U230	2,4,5-Trichlorophenol.
U231	2,4,6-Trichlorophenol.
U230	2,4,5-Trichlorophenoxyacetic acid.
*	* * * * *

APPENDIX I—REPRESENTATIVE SAMPLING METHODS

The methods and equipment used for sampling waste materials will vary with the form and consistency of the waste materials to be sampled. Samples collected using the sampling protocols listed below, for sampling waste with properties similar to the indicated materials, will be considered by the Agency to be representative of the waste.

Extremely viscous liquid—ASTM Standard D140-70 Crushed or powdered material—ASTM Standard D346-75 Soil or rock-like material—ASTM Standard D420-69 Soil-like material—ASTM Standard D1452-65

Fly Ash-like material—ASTM Standard D2234-76 [ASTM Standards are available from ASTM, 1916 Race St., Philadelphia, PA 19103]

Containerized liquid wastes—"COLIWASA" described in "Test Methods for the Evaluation of Solid Waste, Physical/Chemical Methods," * U.S. Environmental Protection Agency, Office of Solid Waste, Washington, D.C. 20460 [Copies may be obtained from Solid Waste Information, U.S. Environmental Protection Agency, 26 W. St. Clair St., Cincinnati, Ohio 45268]

Liquid waste in pits, ponds, lagoons, and similar reservoirs.—"Pond Sampler" described in "Test Methods for the Evaluation of Solid Waste, Physical/Chemical Methods." *

This manual also contains additional information on application of these protocols.

APPENDIX II—EP TOXICITY TEST PROCEDURES

A. Extraction Procedure (EP)

1. A representative sample of the waste to be tested (minimum size 100 grams) shall be obtained using the methods specified in Appendix I or any other method capable of yielding a representative sample within the meaning of Part 260. [For detailed guidance on conducting the various aspects of the EP see "Test Methods for the Evaluation of Solid Waste, Physical/Chemical Methods" (incorporated by reference, see § 260.11).]

2. The sample shall be separated into its component liquid and solid phases using the method described in "Separation Procedure" below. If the solid residue * obtained using this method totals less than 0.5% of the original weight of the waste, the residue can be discarded and the operator shall treat the liquid phase as the extract and proceed immediately to Step 8.

3. The solid material obtained from the Separation Procedure shall be evaluated for its particle size. If the solid material has a surface area per gram of material equal to or greater than 3.1 cm^2 or passes through a 9.5 mm (0.375 inch) standard sieve, the operator shall proceed to Step 4. If the surface area is smaller or the particle size larger than specified above, the solid material shall be prepared for extraction by crushing, cutting or grinding the material so that

* These methods are also described in "Samplers and Sampling Procedures for Hazardous Waste Streams," EPA 600/2-80-018, January 1980.

* The percent solids is determined by drying the filter pad at 80°C until it reaches constant weight and then calculating the percent solids using the following equation:

Percent solids =

$$\frac{(\text{weight of pad} + \text{solid}) - (\text{tare weight of pad})}{\text{initial weight of sample}} \times 100$$

passes through a 9.5 mm (0.375 inch) sieve or if the material is in a single piece, by subjecting the material to the "Structural Integrity Procedure" described below.

4. The solid material obtained in Step 3 shall be weighed and placed in an extractor with 16 times its weight of deionized water. Do not allow the material to dry prior to weighing. For purposes of this test, an acceptable extractor is one which will impart sufficient agitation to the mixture to not only prevent stratification of the sample and extraction fluid but also insure that all sample surfaces are continuously brought into contact with well mixed extraction fluid.

5. After the solid material and deionized water are placed in the extractor, the operator shall begin agitation and measure the pH of the solution in the extractor. If the pH is greater than 5.0, the pH of the solution shall be decreased to 5.0 ± 0.2 by adding 0.5 N acetic acid. If the pH is equal to or less than 5.0, no acetic acid should be added. The pH of the solution shall be monitored, as described below, during the course of the extraction and if the pH rises above 5.2, 0.5N acetic acid shall be added to bring the pH down to 5.0 ± 0.2. However, in no event shall the aggregrate amount of acid added to the solution exceed 4 ml of acid per gram of solid. The mixture shall be agitated for 24 hours and maintained at 20°-40°C (68°-104°F) during this time. It is recommended that the operator monitor and adjust the pH during the course of the extraction with a device such as the Type 45-A pH Controller manufactured by Chemtrix, Inc., Hillsboro, Oregon 97123 or its equivalent, in conjunction with a metering pump and reservoir of 0.5N acetic acid. If such a system is not available, the following manual procedure shall be employed:

(a) A pH meter shall be calibrated in accordance with the manufacturer's specifications.

(b) The pH of the solution shall be checked and, if necessary, 0.5N acetic acid shall be manually added to the extractor until the pH reaches 5.0 ± 0.2. The pH of the solution shall be adjusted at 15, 30 and 60 minute intervals, moving to the next longer interval if the pH does not have to be adjusted more than 0.5N pH units.

(c) The adjustment procedure shall be continued for at least 6 hours.

(d) If at the end of the 24-hour extraction period the pH of the solution is not below 5.2 and the maximum amount of acid (4 ml per gram of solids) has not been added, the pH shall be adjusted to 5.0 ± 0.2 and the extraction continued for an additional four hours during which the pH shall be adjusted at one hour intervals.

6. At the end of the 24 hour extraction period deionized water shall be added to the extractor in an amount determined by the following equation.

$V = (20)(W) - 16(W) - A$

V = ml deionized water to be added

W = weight in grams of solid charged to extractor

A = ml of 0.5N acetic acid added during extraction

7. The material in the extractor shall be separated into its component liquid and solid phases as described under "Separation Procedure."

8. The liquids resulting from Steps 2 and 7 shall be combined. This combined liquid (or the waste itself if it has less than ½ percent solids, as noted in step 2) is the extract and shall be analyzed for the presence of any of the contaminants specified in Table I of § 261.24 using the Analytical Procedures designated below.

Separation Procedure

Equipment: A filter holder, designed for filtration media having a nominal pore size of 0.45 micrometers and capable of applying a 5.3 kg/cm² (75 psi) hydrostatic pressure to the solution being filtered, shall be used. For mixtures containing nonabsorptive solids, where separation can be effected without imposing a 5.3 kg/cm² pressure differential, vacuum filters employing a 0.45 micrometers filter media can be used. (For further guidance on filtration equipment or procedures see "Test Methods for Evaluating Solid Waste, Physical/Chemical Methods" incorporated by reference, see § 260.11). Procedure:[1]

(1) Following manufacturer's directions, the filter unit shall be assembled with a filter bed consisting of a 0.45 micrometer filter membrane. For difficult or slow to filter mixtures a prefilter bed consisting of the following prefilters in increasing pore size (0.65 micrometer membrane, fine glass

[1] This procedure is intended to result in separation of the "free" liquid portion of the waste from any solid matter having a particle size >0.45 μm. If the sample will not filter, various other separation techniques can be used to aid in the filtration. As described above, pressure filtration is employed to speed up the filtration process. This does not alter the nature of the separation. If liquid does not separate during filtration, the waste can be centrifuged. If separation occurs during centrifugation, the liquid portion (centrifugate) is filtered through the 0.45 μm filter prior to becoming mixed with the liquid portion of the waste obtained from the initial filtration. Any material that will not pass through the filter after centrifugation is considered a solid and is extracted.

fiber prefilter, and coarse glass fiber prefilter) can be used.

(ii) The waste shall be poured into the filtration unit.

(iii) The reservoir shall be slowly pressurized until liquid begins to flow from the filtrate outlet at which point the pressure in the filter shall be immediately lowered to 10-15 psig. Filtration shall be continued until liquid flow ceases.

(iv) The pressure shall be increased stepwise in 10 psi increments to 75 psig and filtration continued until flow ceases or the pressurizing gas begins to exit from the filtrate outlet.

(v) The filter unit shall be depressurized, the solid material removed and weighed and then transferred to the extraction apparatus, or, in the case of final filtration prior to analysis, discarded. Do not allow the material retained on the filter pad to dry prior to weighing.

(vi) The liquid phase shall be stored at 4°C for subsequent use in Step 8.

B. Structural Integrity Procedure

Equipment: A Structural Integrity Tester having a 3.18 cm (1.25 in.) diameter hammer weighing 0.33 kg (0.73 lbs.) and having a free fall of 15.24 cm (6 in.) shall be used. This device is available from Associated Design and Manufacturing Company, Alexandria, VA 22314, as Part No. 125, or it may be fabricated to meet the specifications shown in Figure 1.

Procedure

1. The sample holder shall be filled with the material to be tested. If the sample of waste is a large monolithic block, a portion shall be cut from the block having the dimensions of a 3.3 cm (1.3 in.) diameter x 7.1 cm (2.8 in.) cylinder. For a fixated waste samples may be cast in the form of a 3.3 cm (1.3 in.) diameter x 7.1 cm (2.8 in.) cylinder for purposes of conducting this test. In such cases, the waste may be allowed to cure for 30 days prior to further testing.

2. The sample holder shall be placed into the Structural Integrity Tester, then the hammer shall be raised to its maximum height and dropped. This shall be repeated fifteen times.

3. The material shall be removed from the sample holder, weighed, and transferred to the extraction apparatus for extraction.

Analytical Procedures for Analyzing Extract Contaminants

The test methods for analyzing the extract are as follows:

1. For arsenic, barium, cadmium, chromium, lead, mercury, selenium, silver, endrin, lindane, methoxychlor, toxaphene, 2,4-D[2,4-dichlorophenoxyacetic acid] or 2,4,5-TP [2,4,5-trichlorophenoxypropionic acid] "Test Methods for the Evaluation of Solid Waste, Physical/Chemical Methods" (incorporated by reference, see § 260.11).

2. [Reserved]

For all analyses, the methods of standard addition shall be used for quantification of species concentration.

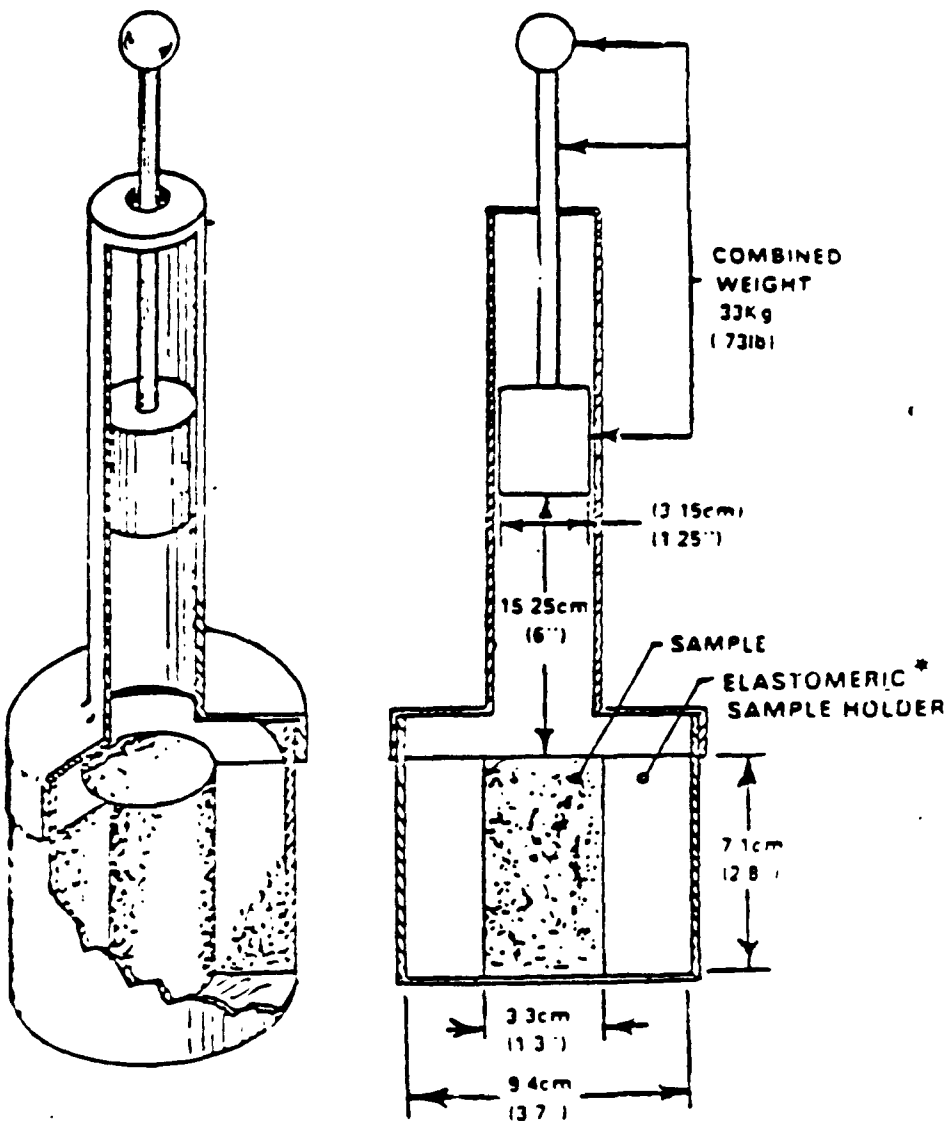

*ELASTOMERIC SAMPLE HOLDER FABRICATED OF MATERIAL FIRM ENOUGH TO SUPPORT THE SAMPLE

Figure 1
COMPACTION TESTER

[45 FR 33119 May 19 1980 as amended at 46 FR 35247 July 7 1981]

APPENDIX III—CHEMICAL ANALYSIS TEST METHODS

Tables 1, 2, and 3 specify the appropriate analytical procedures, described in "Test Methods for Evaluating Solid Waste, Physical/Chemical Methods," (incorporated by reference, see § 260.11) which shall be used to determine whether a sample contains a given Appendix VII or VIII toxic constituent.

Table 1 identifies each Appendix VII or VIII organic constituent along with the approved measurement method. Table 2 identifies the corresponding methods for inorganic species. Table 3 summarizes the contents of SW-846 and supplies specific section and method numbers for sampling and analysis methods.

Prior to final sampling and analysis method selection the analyst should consult the specific section or method described in SW-846 for additional guidance on which of the approved methods should be employed for a specific sample analysis situation.

TABLE 1—ANALYSIS METHODS FOR ORGANIC CHEMICALS CONTAINED IN SW-846

Compound	First edition method(s)	Second edition method(s)
Acetonitrile	8 03, 8 24	8030, 8240
Acrolein	8 03, 8.24	8030, 8240
Acrylamide	8.01, 8 24	8015, 8240
Acrylonitrile	8.03, 8 24	8030 8240
Benzene	8.02, 8.24	8020, 8024
Benz(a)anthracene	8.10, 8 25	8100, 8250, 8310
Benzo(a)pyrene	8 10, 8.25	8100 8250, 8310
Benzotrichloride	8 12, 8 25	8120, 8250
Benzyl chloride	8 01, 8 12, 8 24, 8 25	8120, 8250
Benzo(b)fluoranthene	8 10, 8 25	8100, 8250, 8310
Bis(2-chloroethoxy)methane)	8 01, 8 24	8010 8240
Bis(2-chloroethyl)ether	8 01, 8 24	8010, 8240
Bis(2-chloroisopropyl)ether	8 01, 8 24	8010, 8240
Carbon disulfide	8.01, 8 24	8015 8240
Carbon tetrachloride	8 01, 8 24	8010, 8240
Chlordane	8 08 8 25	8080 8250
Chlorinated biphenyls	8 08, 8 25	8080, 8250
Chlorinated dibenzo-p-dioxins	.....	8280
Chlorinated dibenzofurans	.....	8280
Chloroacetaldehyde	8 01, 8 24	8010, 8240
Chlorobenzene	8 01, 8 02, 8 24	8020, 8240
Chloroform	8 01 8 24	8010, 8240
Chloromethane	8 01, 8 24	8010 8240
2-Chlorophenol	8 04 8 25	8040, 8250
Chrysene	8 10, 8.25	8100, 8250, 8310
Creosote	8 10, 8 25	8100, 8250
Cresol(s)	8 04 8 25	8040 8250
Cresylic Acid(s)	8 04 8 25	8040 8250

TABLE 1—ANALYSIS METHODS FOR ORGANIC CHEMICALS CONTAINED IN SW-846—Continued

Compound	First edition method(s)	Second edition method(s)
Dichlorobenzene(s)	8 01 8 02, 8 12, 8 25	8010 8120 8250
Dichloroethane(s)	8 01 8 24	8010 8240
Dichloromethane	8 01, 8 24	8010 8240
Dichlorophenoxyacetic acid	8 40 8 25	8150 8250
Dichloropropanol	8 12, 8 25	8120 8250
2,4-Dimethylphenol	8 04 8 25	8040 8250
Dinitrobenzene	8 09, 8 25	8090 8250
4,6-Dinitro-o-cresol	8 04 8 25	8040 8250
2,4-Dinitrotoluene	8 09, 8 25	8090 8250
Endrin	8 08, 8 25	8080 8250
Ethyl ether	8 01, 8 02, 8 24	8015 8240
Formaldehyde	8 01, 8 24	8015 8240
Formic acid	8 06 8 25	8250
Heptachlor	8 08 8 25	8080 8250
Hexachlorobenzene	8 12, 8 25	8120 8250
Hexachlorobutadiene	8 12, 8 25	8120, 8250
Hexachloroethane	8 12, 8 25	8010 8240
Hexachlorocyclopentadiene	8 12, 8 25	8120, 8250
Lindane	8 08, 8 25	8080, 8250
Maleic anhydride	8 06 8 25	8250
Methanol	8 01, 8 24	8010 8240
Methomyl	8 32	8250
Methyl ethyl ketone	8 01, 8 02, 8 24	8015 8240
Methyl isobutyl ketone	8 01 8 02, 8.24	8015 8240
Naphthalene	8 10, 8 25	8100 8250
Naphthoquinone	8 08, 8 09, 8 25	8090, 8250
Nitrobenzene	8 09, 8 25	8090 8250
4-Nitrophenol	8 04, 8 25	8040 8240
Paraldehyde (trimer of acetaldehyde)	8 01 8 24	8015, 8240
Pentachlorophenol	8 04 8 25	8040, 8250
Phenol	8 04 8 25	8040 8250
Phorate	8 22	8140
Phosphorodithioic acid esters	8 06, 8 09, 8 22	8140
Phthalic anhydride	8 06 8 09, 8 25	8090, 8250
2-Picoline	8 08, 8 09, 8 25	8090, 8250
Pyridine	8 08, 8 09 8 25	8090 8250
Tetrachlorobenzene(s)	8 12, 8 25	8120, 8250
Tetrachloroethane(s)	8 01 8 24	8010 8240
Tetrachloroethene	8 01 8 24	8010 8240
Tetrachlorophenol	8 04 8 24	8040 8250
Toluene	8 02, 8 24	8020, 8024
Toluenediamine	8 25	8250
Toluene diisocyanate(s)	8 08, 8 25	8250
Toxaphene	8 08 8 25	8080 8250
Trichloroethane	8 01 8 24	8010, 8240
Trichloroethene(s)	8 01 8 24	8010, 8240
Trichlorofluoromethane	8 01 8 24	8010 8240
Trichlorophenol(s)	8 04 8 25	8040 8250
2,4,5-Trichlorophenoxy propionic acid	8 40 8 25	8150 8250
Trichloropropane	8 01 8 24	8010 8240
Vinyl chloride	8 01 8 24	8010 8240
Vinylidene chloride	8 01 8 24	8010 8240
Xylene	8 02 8 24	8020 8240

[illegible] for phenanthrene and carbazole. If these are [illegible] a ratio between 1:4:1 and 5:1 creosote should be [illegible] present.

TABLE 2—ANALYSIS METHODS FOR INORGANIC CHEMICALS CONTAINED IN SW-846

Compound	First edition method(s)	Second edition method(s)
[illegible]	8.50	7040 7041
[illegible]	8.51	7060 7061
[illegible]	8.52	7080 7081
[illegible]	8.53	7090 7091
[illegible]	8.54	7190 7191
[illegible] Hexavalent	8.545 8.546	7195 7196

TABLE 2—ANALYSIS METHODS FOR INORGANIC CHEMICALS CONTAINED IN SW-846—Continued

Compound	First edition method(s)	Second edition method(s)
	8.547	7197
Lead	8.56	7420 7421
Mercury	8.57	7470 7471
Nickel	8.58	7520 7521
Selenium	8.59	7740 7741
Silver	8.60	7760 7761
Cyanides	8.55	9010
Total Organic Halogen	8.66	9020
Sulfides	8.67	9030

TABLE 3—SAMPLING AND ANALYSIS METHODS CONTAINED IN SW-846

Title	First edition		Second edition	
	Section No	Method No	Section No	Method No
[illegible] of Solid Wastes	1.0		1.0	
[illegible] of Appropriate Sampling Plans	1.0		1.1	
[illegible] and Scientific Objectives	1.0-2		1.1.1	
Fundamental Statistical Concepts	1.0-3		1.1.2	
Basic Statistical Strategies	1.0-7		1.1.3	
Simple Random Sampling			1.1.3.1	
Stratified Random Sampling			1.1.3.2	
Systematic Random Sampling			1.1.3.3	
Special Considerations	1.0-7			
Composite Sampling			1.1.4.1	
Subsampling			1.1.4.2	
Cost and Loss Functions			1.1.4.3	
[illegible]ntation of Sampling Plan	1.0-7		1.2	
[illegible] of Sampling Equipment			1.2.1	
Composite Liquid Waste Sampler	3.2.1		1.2.1.1	
Weighted Bottle	3.2.2		1.2.1.2	
Dipper	3.2.3		1.2.1.3	
Thief	3.2.4		1.2.1.4	
Trier	3.2.5		1.2.1.5	
Auger	3.2.6		1.2.1.6	
Scoop and Shovel	3.2.7		1.2.1.7	
Selection of Sample Containers	3.3		1.2.2	
Processing and Storage of Samples	3.3		1.2.3	
[illegible]ntation of Chain of Custody	2.0		1.3	
Sample Labels	2.0-1		1.3.1	
Sample Seals	2.0-3		1.3.2	
Field Log Book	2.0-5		1.3.3	
Chain of Custody Record	2.0-6		1.3.4	
Sample Analysis Request Sheet	2.0-9		1.3.5	
Sample Delivery to Laboratory	2.0-10		1.3.6	
Shipping of Samples	2.0-10		1.3.7	
Receipt and Logging of Sample	2.0-12		1.3.8	
Assignment of Sample for Analysis	2.0-13		1.3.9	
[illegible] Methodology	3.0		1.4	
Containers	3.2-2		1.4.1	
Tanks	3.2-2		1.4.2	
Waste Piles	3.2-2		1.4.3	
Landfills and Lagoons	3.2-2		1.4.4	
Waste Characterization Procedures			2.0	
Physical Analysis of Hazardous Waste			2.1	
Ignitability	4.0		2.1.1	
Pensky-Martens Closed-Cup Method	4.1		2.1.1	1010
Setaflash Closed Cup Method	4.1		2.1.1	1020
Corrosivity	5.0		2.1.2	
Corrosivity Toward Steel	5.3		2.1.2	1110
Reactivity	6.0		2.1.3	
Extraction Procedure Toxicity	7.0		2.1.4	

TABLE 3—SAMPLING AND ANALYSIS METHODS CONTAINED IN SW-846—Continued

Title	First edition		Second edition	
	Section No	Method No	Section No	Method No
Extraction Procedure Toxicity Test	7.1, 7.2, 7.5			
Method and Structural Integrity Test	7.4		2.4	1310
Sample Workup Techniques			4.0	
Inorganic Techniques	8.49		4.1	
Acid Digestion for Flame AAS			4.1	3010
Acid Digestion for Furnace AAS			4.1	3020
Acid Digestion of Oil, Grease, or Wax	8.49-9		4.1	3030
Dissolution Procedure for Oil, Grease, or Wax	8.49-8			
Alkaline Digestion	8.0	8.458	4.1	3060
Organic Techniques	8.0		4.2	
Separatory Funnel Liquid-Liquid Extraction	9.0	9.1	4.2	3510
Continuous Liquid-Liquid Extraction	9.0	9.01	4.2	3520
Acid-Base Cleanup Extraction	8.0	8.84	4.2	3530
Soxhlet Extraction	8.0	8.96	4.2	3540
Sonication Extraction	9.0	8.85	4.2	3550
Sample Introduction Techniques			5.0	
Headspace	9.0	8.82	5.0	5020
Purge-and-Trap	9.0	8.83	5.0	5030
Inorganic Analytical Methods	8.0		7.0	
Antimony, Flame AAS	8.0	8.50	7.0	7470
Antimony, Furnace AAS	8.0	8.50	7.0	7471
Arsenic, Flame AAS	8.0	8.51	7.0	7060
Arsenic, Furnace AAS	8.0	8.51	7.0	7061
Barium, Flame AAS	8.0	8.52	7.0	7080
Barium, Furnace AAS	8.0	8.52	7.0	7081
Cadmium, Flame AAS	8.0	8.53	7.0	7130
Cadmium, Furnace AAS	8.0	8.53	7.0	7131
Chromium, Flame AAS	8.0	8.54	7.0	7190
Chromium, Furnace AAS	8.0	8.54	7.0	7191
Chromium, Hexavalent, Coprecipitation	8.0	8.545	7.0	7195
Chromium, Hexavalent, Colorimetric	8.0	8.546	7.0	7196
Chromium, Hexavalent, Chelation	8.0	8.547	7.0	7197
Lead, Flame AAS	8.0	8.56	7.0	7420
Lead, Furnace AAS	8.0	8.56	7.0	7421
Mercury, Cold Vapor, Liquid	8.0	8.57	7.0	7470
Mercury, Cold Vapor, Solid	8.0	8.57	7.0	7471
Nickel, Flame AAS	8.0	8.58	7.0	7520
Nickel, Furnace AAS	8.0	8.58	7.0	7521
Selenium, Flame AAS	8.0	8.59	7.0	7740
Selenium, Gaseous Hydride AAS	8.0	8.59	7.0	7741
Silver, Flame AAS	8.0	8.60	7.0	7760
Silver, Furnace AAS	8.0	8.60	7.0	7761
Organic Analytical Methods	8.0		8.0	
Gas Chromatographic Methods	8.0		8.1	
Halogenated Volatile Organics	8.0	8.01	8.1	8010
Nonhalogenated Volatile Organics	8.0	8.01	8.1	8015
Aromatic Volatile Organics	8.0	8.02	8.1	8020
Acrolein, Acrylonitrile, Acetonitrile	8.0	8.03	8.1	8030
Phenols	8.0	8.04	8.1	8040
Phthalate Esters	8.0	8.06	8.1	8060
Organochlorine Pesticides and PCBs	8.0	8.08	8.1	8080
Nitroaromatics and Cyclic Ketones	8.0	8.09	8.1	8090
Polynuclear Aromatic Hydrocarbons	8.0	8.10	8.1	8100
Chlorinated Hydrocarbons	8.0	8.12	8.1	8120
Organophosphorus Pesticides	9.0	8.22	8.1	8140
Chlorinated Herbicides	8.0	8.40	8.1	8150
Gas Chromatographic/Mass Spectroscopy Methods (GC/MS)	8.0		8.2	
GC/MS Volatiles	8.0	8.24	8.2	8240
GC/MS Semi-Volatiles, Packed Column	9.0	8.25	8.2	8250
GC/MS Semi-Volatiles, Capillary	8.0	8.27	8.2	8270
Analysis of Chlorinated Dioxins and Dibenzofurans			8.2	8290
High Performance Liquid Chromatographic Methods (HPLC)	9.0		8.3	
Polynuclear Aromatic Hydrocarbons	8.0	8.10	8.3	8310
Miscellaneous Analytical Methods	8.0		9.0	
Cyanide, Total and Amenable to Chlorination	9.0	8.55	9.0	[illegible]
Total Organic Halogen (TOX)	8.0	8.66	9.0	[illegible]
Sulfides	8.0	8.67	9.0	[illegible]
pH Measurement	5.0	5.2	9.0	[illegible]

TABLE 3—SAMPLING AND ANALYSIS METHODS CONTAINED IN SW-846—Continued

Title	First edition		Second edition	
	Section No	Method No	Section No	Method No
Quality Control/Quality Assurance	10.0		10.1	
Introduction	10.0		10.1	
Program Design	10.0		10.2	
Sampling	10.0		10.3	
Analysis	10.0		10.4	
Data Handling	10.0		10.5	

[illegible] specific metal

[illegible] FR 15257, Apr. 8, 1983, as amended at 50 FR 2000, Jan. 14, 1985]

EFFECTIVE DATE NOTE: At 50 FR 2000, Jan. [illegible] 1985, Part 261, App. III was amended as follows: In Table 1, the entry for "Chlorinated dibenzodioxins" was removed, and the entries for "Chlorinated dibenzo-p-dioxins, and Chlorinated dibenzofurans" were added. In Table 3, the entry for "Analysis of Chlorinated Dioxins and Dibenzofurans" was added under "Organic Analytical Methods—Gas Chromatographic/Mass Spectroscopy Methods (GC/MS)" after the entry "GC/MS Semi-Volatiles, Capillary". These amendments are effective July 15, 1985. For the convenience of the user, the superseded entry from Table 1 is set out below:

TABLE 1—ANALYTICAL METHODS FOR ORGANIC CHEMICALS CONTAINED IN SW-846

Compound	First edition method(s)	Second edition method(s)
. . . . .		
Chlorinated dibenzodioxins	8.08 8.25	8080 8250
. . . . .		

APPENDIX IV—[RESERVED FOR RADIOACTIVE WASTE TEST METHODS]

APPENDIX V—[RESERVED FOR INFECTIOUS WASTE TREATMENT SPECIFICATIONS]

APPENDIX VI—[RESERVED FOR ETIOLOGIC AGENTS]

APPENDIX VII—BASIS FOR LISTING HAZARDOUS WASTE

EPA hazardous waste No	Hazardous constituents for which listed
F001	Tetrachloroethylene, methylene chloride, trichloroethylene, 1,1,1-trichloroethane, carbon tetrachloride, chlorinated fluorocarbons
F002	Tetrachloroethylene, methylene chloride, trichloroethylene, 1,1,1-trichloroethane, chlorobenzene, 1,1,2-trichloro-1,2,2-trifluoroethane, ortho-dichlorobenzene, trichlorofluoromethane
F003	N/A
F004	Cresols and cresylic acid, nitrobenzene
F005	Toluene, methyl ethyl ketone, carbon disulfide, isobutanol, pyridine
F006	Cadmium, hexavalent chromium, nickel, cyanide (complexed)
F007	Cyanide (salts)
F008	Cyanide (salts)
F009	Cyanide (salts)
F010	Cyanide (salts)
F011	Cyanide (salts)
F012	Cyanide (complexed)
F019	Hexavalent chromium, cyanide (complexed)
F020	Tetra- and pentachlorodibenzo-p-dioxins, tetra and pentachlorodibenzofurans, tri- and tetrachlorophenols and their chlorophenoxy derivative acids, esters, ethers, amine and other salts
F021	Penta- and hexachlorodibenzo-p-dioxins, penta and hexachlorodibenzofurans, pentachlorophenol and its derivatives
F022	Tetra-, penta-, and hexachlorodibenzo-p-dioxins, tetra, penta, and hexachlorodibenzofurans
F023	Tetra- and pentachlorodibenzo-p-dioxins, tetra and pentachlorodibenzofurans, tri- and tetra chlorophenols and their chlorophenoxy derivative acids, esters, ethers, amine and other salts

EPA hazardous waste No	Hazardous constituents for which listed
F024	Chloromethane, dichloromethane, trichloromethane, carbon tetrachloride, chloroethylene, 1,1-dichloroethane, 1,2-dichloroethane, trans-1-2-dichloroethylene, 1,1-dichloroethylene, 1,1,1-trichloroethane, 1,1,2-trichloroethane, trichloroethylene, 1,1,1,2-tetra-chloroethane, 1,1,2,2-tetrachloroethane, tetrachloroethylene, pentachloroethane, hexachloroethane, allyl chloride (3-chloropropene), dichloropropane, dichloropropene, 2-chloro-1,3-butadiene, hexachloro-1,3-butadiene, hexachlorocyclopentadiene, hexachlorocyclohexane, benzene, chlorbenzene, dichlorobenzenes, 1,2,4-trichlorobenzene, tetrachlorobenzene, pentachlorobenzene, hexachlorobenzene, toluene, naphthalene
F026	Tetra-, penta-, and hexachlorodibenzo-p-dioxins, tetra-, penta-, and hexachlorodibenzofurans
F027	Tetra, penta-, and hexachlorodibenzo-p-dioxins, tetra-, penta-, and hexachlorodibenzofurans, tri-, tetra-, and pentachlorophenols and their chlorophenoxy derivative acids, esters, ethers, amine and other salts
F028	Tetra-, penta-, and hexachlorodibenzo-p-dioxins, tetra-, penta-, and hexachlorodibenzofurans, tri-, tetra-, and pentachlorophenols and their chlorophenoxy derivative acids, esters, ethers, amine and other salts.
K001	Pentachlorophenol, phenol, 2-chlorophenol, p-chloro-m-cresol, 2,4-dimethylphenyl, 2,4-dinitrophenol, trichlorophenols, tetrachlorophenols, 2,4-dinitrophenol, creosote, chrysene, naphthalene, fluoranthene, benzo(b)fluoranthene, benzo(a)pyrene, indeno(1,2,3-cd)pyrene, benz(a)anthracene, dibenz(a)anthracene, acenaphthalene.
K002	Hexavalent chromium, lead
K003	Hexavalent chromium, lead.
K004	Hexavalent chromium
K005	Hexavalent chromium, lead.
K006	Hexavalent chromium.
K007	Cyanide (complexed), hexavalent chromium.
K008	Hexavalent chromium.
K009	Chloroform, formaldehyde, methylene chloride, methyl chloride, paraldehyde, formic acid.
K010	Chloroform, formaldehyde, methylene chloride, methyl chloride, paraldehyde, formic acid, chloroacetaldehyde.
K011	Acrylonitrile, acetonitrile, hydrocyanic acid.
K013	Hydrocyanic acid, acrylonitrile, acetonitrile.
K014	Acetonitrile, acrylamide
K015	Benzyl chloride, chlorobenzene, toluene, benzotrichloride.
K016	Hexachlorobenzene, hexachlorobutadiene, carbon tetrachloride, hexachloroethane, perchloroethylene.
K017	Epichlorohydrin, chloroethers [bis(chloromethyl) ether and bis (2-chloroethyl) ethers], trichloropropene, dichloropropanols.
K018	1,2-dichloroethane, trichloroethylene, hexachlorobutadiene hexachlorobenzene
K019	Ethylene dichloride, 1,1,1-trichloroethane, 1,1,2-trichloroethane, tetrachloroethanes (1,1,2,2-tetrachloroethane and 1,1,1,2-tetrachloroethane), trichloroethylene, tetrachloroethylene carbon tetrachloride, chloroform, vinyl chloride vinylidene chloride
K020	Ethylene dichloride, 1,1,1-trichloroethane, 1,1,2-trichloroethane, tetrachloroethanes (1,1,2,2-tetrachloroethane and 1,1,1,2-tetrachloroethane), trichloroethylene, tetrachloroethylene, carbon tetrachloride, chloroform, vinyl chloride, vinylidene chloride
K021	Antimony, carbon tetrachloride, chloroform
K022	Phenol, tars (polycyclic aromatic hydrocarbons)
K023	Phthalic anhydride, maleic anhydride
K024	Phthalic anhydride, 1,4-naphthoquinone
K025	Meta-dinitrobenzene, 2,4-dinitrotoluene
K026	Paraldehyde, pyridines, 2-picoline
K027	Toluene diisocyanate, toluene-2, 4-diamine
K028	1,1,1-trichloroethane, vinyl chloride
K029	1,2-dichloroethane, 1,1,1-trichloroethane, vinyl chloride, vinylidene chloride, chloroform
K030	Hexachlorobenzene, hexachlorobutadiene, hexachloroethane, 1,1,1,2-tetrachloroethane, 1,1,2,2-tetrachloroethane, ethylene dichloride
K031	Arsenic
K032	Hexachlorocyclopentadiene.
K033	Hexachlorocyclopentadiene
K034	Hexachlorocyclopentadiene
K035	Creosote, chrysene, naphthalene, fluoranthene benzo(b) fluoranthene, benzo(a)pyrene, indeno(1,2,3-cd) pyrene, benzo(a)anthracene, dibenzo(a)anthracene, acenaphthalene.
K036	Toluene phosphorodithoic and phosphorothoic acid esters.
K037	Toluene, phosphorodithoic and phosphorothoic acid esters
K038	Phorate formaldehyde, phosphorodithoic and phosphorothoic acid esters.
K039	Phosphorodithoic and phosphorothoic acid esters.
K040	Phorate, formaldehyde, phosphorodithoic and phosphorothoic acid esters.
K041	Toxaphene.
K042	Hexachlorobenzene, ortho-dichlorobenzene
K043	2,4-dichlorophenol, 2,6-dichlorophenol 2,4,6-trichlorophenol.
K044	N.A.
K045	N.A.
K046	Lead.
K047	N.A.
K048	Hexavalent chromium, lead
K049	Hexavalent chromium, lead.
K050	Hexavalent chromium
K051	Hexavalent chromium, lead.
K052	Lead
K060	Cyanide, naphthalene, phenolic compounds, arsenic.
K061	Hexavalent chromium, lead, cadmium
K062	Hexavalent chromium lead
K069	Hexavalent chromium, lead, cadmium
K071	Mercury
K073	Chloroform carbon tetrachloride, hexachloroethane trichloroethane, tetrachloroethylene, dichloroethylene 1,1,2,2-tetrachloroethane
K083	Aniline, diphenylamine nitrobenzene phenylenediamine
K084	Arsenic
K085	Benzene dichlorobenzenes trichlorobenzenes tetrachlorobenzenes, pentachlorobenzene hexachlorobenzene, benzyl chloride
K086	Lead hexavalent chromium
K087	Phenol naphthalene
K093	Phthalic anhydride maleic anhydride
K094	Phthalic anhydride

EPA hazardous waste No	Hazardous constituents for which listed
K095	1,1,2-trichloroethane 1,1,1,2-tetrachloroethane 1,1,2,2-tetrachloroethane
K096	1,2-dichloroethane 1,1,1-trichloroethane 1,1,2-trichloroethane
K097	Chlordane heptachlor
K098	Toxaphene
K099	2,4-dichlorophenol 2,4,6-trichlorophenol
K100	Hexavalent chromium lead cadmium
K101	Arsenic
K102	Arsenic
K103	Aniline, nitrobenzene phenylenediamine
K104	Aniline benzene, diphenylamine, nitrobenzene phenylenediamine
K105	Benzene, monochlorobenzene dichlorobenzenes, 2,4,6-trichlorophenol
K106	Mercury

N.A.—Waste is hazardous because it fails the test for the characteristic of ignitability, corrosivity, or reactivity

[46 FR 4619, Jan. 16, 1981, as amended at 46 FR 27477, May 20, 1981; 49 FR 5312, Feb. 10, 1984; 50 FR 2000, Jan. 14, 1985]

EFFECTIVE DATE NOTE: At 50 FR 2000, Jan. 14, 1985, Part 261, App. VII was amended by adding the entries for F020 through F023, and F026 through F028, effective July 15, 1985.

APPENDIX VIII—HAZARDOUS CONSTITUENTS

Acetonitrile (Ethanenitrile)
Acetophenone (Ethanone, 1-phenyl)
3-(alpha-Acetonylbenzyl)-4-hydroxycoumarin and salts (Warfarin)
2-Acetylaminofluorene (Acetamide, N-(9H-fluoren-2-yl)-)
Acetyl chloride (Ethanoyl chloride)
1-Acetyl-2-thiourea (Acetamide, N-(aminothioxomethyl)-)
Acrolein (2-Propenal)
Acrylamide (2-Propenamide)
Acrylonitrile (2-Propenenitrile)
Aflatoxins
Aldrin (1,2,3,4,10,10-Hexachloro-1,4,4a,5,8,8a,8b-hexahydro-endo,exo-1,4:5,8-Dimethanonaphthalene)
Allyl alcohol (2-Propen-1-ol)
Aluminum phosphide
4-Aminobiphenyl ([1,1'-Biphenyl]-4-amine)
6-Amino-1,1a,2,8,8a,8b-hexahydro-8-(hydroxymethyl)-8a-methoxy-5-methylcarbamate azirino[2',3':3,4]pyrrolo[1,2-a]indole-4,7-dione, (ester) (Mitomycin C) (Azirino[2',3':3,4]pyrrolo(1,2-a)indole-4,7-dione, 6-amino-8-[((aminocarbonyl)oxy)methyl]-1,1a,2,8,8a,8b-hexahydro-8a-methoxy-5-methy-)
5-(Aminomethyl)-3-isoxazolol (3(2H)-Isoxazolone, 5-(aminomethyl)-) 4-Aminopyridine (4-Pyridinamine)
Amitrole (1H-1,2,4-Triazol-3-amine)
Aniline (Benzenamine)
Antimony and compounds, N.O.S.*
Aramite (Sulfurous acid, 2-chloroethyl-, 2-[4-(1,1-dimethylethyl)phenoxy]-1-methylethyl ester)
Arsenic and compounds, N.O.S.*
Arsenic acid (Orthoarsenic acid)
Arsenic pentoxide (Arsenic (V) oxide)
Arsenic trioxide (Arsenic (III) oxide)
Auramine (Benzenamine, 4,4-carbonimidoylbis[N,N-Dimethyl-, monohydrochloride)
Azaserine (L-Serine, diazoacetate (ester))
Barium and compounds, N.O.S.*
Barium cyanide
Benz[c]acridine (3,4-Benzacridine)
Benz[a]anthracene (1,2-Benzanthracene)
Benzene (Cyclohexatriene)
Benzenearsonic acid (Arsonic acid, phenyl-)
Benzene, dichloromethyl- (Benzal chloride)
Benzenethiol (Thiophenol)
Benzidine ([1,1'-Biphenyl]-4,4'-diamine)
Benzo[b]fluoranthene (2,3-Benzofluoranthene)
Benzo[j]fluoranthene (7,8-Benzofluoranthene)
Benzo[a]pyrene (3,4-Benzopyrene)
p-Benzoquinone (1,4-Cyclohexadienedione)
Benzotrichloride (Benzene, trichloromethyl-)
Benzyl chloride (Benzene, (chloromethyl)-)
Beryllium and compounds, N.O.S.*
Bis(2-chloroethoxy)methane (Ethane, 1,1'-[methylenebis(oxy)]bis[2-chloro-])
Bis(2-chloroethyl) ether (Ethane, 1,1-oxybis[2-chloro-])
N,N-Bis(2-chloroethyl)-2-naphthylamine (Chlornaphazine)
Bis(2-chloroisopropyl) ether (Propane, 2,2-oxybis[2-chloro-])
Bis(chloromethyl) ether (Methane, oxybis[chloro-])
Bis(2-ethylhexyl) phthalate (1,2-Benzenedicarboxylic acid, bis(2-ethylhexyl) ester)
Bromoacetone (2-Propanone, 1-bromo-)
Bromomethane (Methyl bromide)
4-Bromophenyl phenyl ether (Benzene, 1-bromo-4-phenoxy-)
Brucine (Strychnidin-10-one, 2,3-dimethoxy-)
2-Butanone peroxide (Methyl ethyl ketone, peroxide)
Butyl benzyl phthalate (1,2-Benzenedicarboxylic acid, butyl phenylmethyl ester)
2-sec-Butyl-4,6-dinitrophenol (DNBP) (Phenol, 2,4-dinitro-6-(1-methylpropyl)-)
Cadmium and compounds, N.O.S.*
Calcium chromate (Chromic acid, calcium salt)
Calcium cyanide

* The abbreviation N.O.S. (not otherwise specified) signifies those members of the general class not specifically listed by name in this appendix.

Carbon disulfide (Carbon bisulfide)
Carbon oxyfluoride (Carbonyl fluoride)
Chloral (Acetaldehyde, trichloro-)
Chlorambucil (Butanoic acid, 4-[bis(2-chloroethyl)amino]benzene-)
Chlordane (alpha and gamma isomers) (4,7-Methanoindan, 1,2,4,5,6,7,8,8-octachloro-3,4,7,7a-tetrahydro-) (alpha and gamma isomers)
Chlorinated benzenes, N.O.S.*
Chlorinated ethane, N.O.S.*
Chlorinated fluorocarbons, N.O.S.*
Chlorinated naphthalene, N.O.S.*
Chlorinated phenol, N.O.S.*
Chloroacetaldehyde (Acetaldehyde, chloro-)
Chloroalkyl ethers, N.O.S.*
p-Chloroaniline (Benzenamine, 4-chloro-)
Chlorobenzene (Benzene, chloro-)
Chlorobenzilate (Benzeneacetic acid, 4-chloro-alpha-(4-chlorophenyl)-alpha-hydroxy-, ethyl ester)
2-Chloro-1, 3-butadiene (chloroprene)
p-Chloro-m-cresol (Phenol, 4-chloro-3-methyl)
1-Chloro-2,3-epoxypropane (Oxirane, 2-(chloromethyl)-)
2-Chloroethyl vinyl ether (Ethene, (2-chloroethoxy)-)
Chloroform (Methane, trichloro-)
Chloromethane (Methyl chloride)
Chloromethyl methyl ether (Methane, chloromethoxy-)
2-Chloronaphthalene (Naphthalene, beta-chloro-)
2-Chlorophenol (Phenol, o-chloro-)
1-(o-Chlorophenyl)thiourea (Thiourea, (2-chlorophenyl)-)
3-Chloropropene (allyl chloride)
3-Chloropropionitrile (Propanenitrile, 3-chloro-)
Chromium and compounds, N.O.S.*
Chrysene (1,2-Benzphenanthrene)
Citrus red No. 2 (2-Naphthol, 1-[(2,5-dimethoxyphenyl)azo]-)
Coal tars
Copper cyanide
Creosote (Creosote, wood)
Cresols (Cresylic acid) (Phenol, methyl-)
Crotonaldehyde (2-Butenal)
Cyanides (soluble salts and complexes), N.O.S.*
Cyanogen (Ethanedinitrile)
Cyanogen bromide (Bromine cyanide)
Cyanogen chloride (Chlorine cyanide)
Cycasin (beta-D-Glucopyranoside, (methyl-ONN-azoxy)methyl-)
2-Cyclohexyl-4,6-dinitrophenol (Phenol, 2-cyclohexyl-4,6-dinitro-)
Cyclophosphamide (2H-1,3,2,-Oxazaphosphorine, [bis(2-chloroethyl)amino]-tetrahydro-, 2-oxide)
Daunomycin (5,12-Naphthacenedione, (8S-cis)-8-acetyl-10-[(3-amino-2,3,6-trideoxy)-alpha-L-lyxo-hexopyranosyl)oxy]-7,8,9,10-tetrahydro-6,8,11-trihydroxy-1-methoxy-)
DDD (Dichlorodiphenyldichloroethane) (Ethane, 1,1-dichloro-2,2-bis(p-chlorophenyl)-)
DDE (Ethylene, 1,1-dichloro-2,2-bis(4-chlorophenyl)-)
DDT (Dichlorodiphenyltrichloroethane) (Ethane, 1,1,1-trichloro-2,2-bis(p-chlorophenyl)-)
Diallate (S-(2,3-dichloroallyl) diisopropylthiocarbamate)
Dibenz[a,h]acridine (1,2,5,6-Dibenzacridine)
Dibenz[a,j]acridine (1,2,7,8-Dibenzacridine)
Dibenz[a,h]anthracene (1,2,5,6-Dibenzanthracene)
7H-Dibenzo[c,g]carbazole (3,4,5,6-Dibenzcarbazole)
Dibenzo[a,e]pyrene (1,2,4,5-Dibenzpyrene)
Dibenzo[a,h]pyrene (1,2,5,6-Dibenzpyrene)
Dibenzo[a,i]pyrene (1,2,7,8-Dibenzpyrene)
1,2-Dibromo-3-chloropropane (Propane, 1,2-dibromo-3-chloro-)
1,2-Dibromoethane (Ethylene dibromide)
Dibromomethane (Methylene bromide)
Di-n-butyl phthalate (1,2-Benzenedicarboxylic acid, dibutyl ester)
o-Dichlorobenzene (Benzene, 1,2-dichloro-)
m-Dichlorobenzene (Benzene, 1,3-dichloro-)
p-Dichlorobenzene (Benzene, 1,4-dichloro-)
Dichlorobenzene, N.O.S.* (Benzene, dichloro-, N.O.S.*)
3,3'-Dichlorobenzidine ([1,1'-Biphenyl]-4,4'-diamine, 3,3'-dichloro-)
1,4-Dichloro-2-butene (2-Butene, 1,4-dichloro-)
Dichlorodifluoromethane (Methane, dichlorodifluoro-)
1,1-Dichloroethane (Ethylidene dichloride)
1,2-Dichloroethane (Ethylene dichloride)
trans-1,2-Dichloroethene (1,2-Dichloroethylene)
Dichloroethylene, N.O.S.* (Ethene, dichloro-, N.O.S.*)
1,1-Dichloroethylene (Ethene, 1,1-dichloro-)
Dichloromethane (Methylene chloride)
2,4-Dichlorophenol (Phenol, 2,4-dichloro-)
2,6-Dichlorophenol (Phenol, 2,6-dichloro-)
2,4-Dichlorophenoxyacetic acid (2,4-D), salts and esters (Acetic acid, 2,4-dichlorophenoxy-, salts and esters)
Dichlorophenylarsine (Phenyl dichloroarsine)
Dichloropropane, N.O.S.* (Propane, dichloro-, N.O.S.*)
1,2-Dichloropropane (Propylene dichloride)
Dichloropropanol, N.O.S.* (Propanol, dichloro-, N.O.S.*)
Dichloropropene, N.O.S.* (Propene, dichloro-, N.O.S.*)
1,3-Dichloropropene (1-Propene, 1,3-dichloro-)
Dieldrin (1,2,3,4,10,10-hexachloro-6,7-epoxy-1,4,4a,5,6,7,8,8a-octa-hydro-endo,exo-1,4:5,8-Dimethanonaphthalene)
1,2:3,4-Diepoxybutane (2,2'-Bioxirane)
Diethylarsine (Arsine, diethyl-)

1,N-Diethylhydrazine (Hydrazine, 1,2-diethyl)
O,O-Diethyl S-methyl ester of phosphorodithioic acid (Phosphorodithioic acid, O,O-diethyl S-methyl ester
O,O-Diethylphosphoric acid, O-p-nitrophenyl ester (Phosphoric acid, diethyl p-nitrophenyl ester)
Diethyl phthalate (1,2-Benzenedicarboxylic acid, diethyl ester)
O,O-Diethyl O-2-pyrazinyl phosphorothioate (Phosphorothioic acid, O,O-diethyl O-pyrazinyl ester
Diethylstilbesterol (4,4'-Stilbenediol, alpha,alpha-diethyl, bis(dihydrogen phosphate, (E)-)
Dihydrosafrole (Benzene, 1,2-methylenedioxy-4-propyl-)
3,4-Dihydroxy-alpha-(methylamino)methyl benzyl alcohol (1,2-Benzenediol, 4-[1-hydroxy-2-(methylamino)ethyl]-)
Diisopropylfluorophosphate (DFP) (Phosphorofluoridic acid, bis(1-methylethyl) ester)
Dimethoate (Phosphorodithioic acid, O,O-dimethyl S-[2-(methylamino)-2-oxoethyl] ester
3,3'-Dimethoxybenzidine ([1,1'-Biphenyl]-4,4'-diamine, 3-3'-dimethoxy-)
p-Dimethylaminoazobenzene (Benzenamine, N,N-dimethyl-4-(phenylazo)-)
7,12-Dimethylbenz[a]anthracene (1,2-Benzanthracene, 7,12-dimethyl-)
3,3'-Dimethylbenzidine ([1,1'-Biphenyl]-4,4'-diamine, 3,3'-dimethyl-)
Dimethylcarbamoyl chloride (Carbamoyl chloride, dimethyl-)
1,1-Dimethylhydrazine (Hydrazine, 1,1-dimethyl-)
1,2-Dimethylhydrazine (Hydrazine, 1,2-dimethyl-)
3,3-Dimethyl-1-(methylthio)-2-butanone, O-[(methylamino) carbonyl]oxime (Thiofanox)
alpha,alpha-Dimethylphenethylamine (Ethanamine, 1,1-dimethyl-2-phenyl-)
2,4-Dimethylphenol (Phenol, 2,4-dimethyl-)
Dimethyl phthalate (1,2-Benzenedicarboxylic acid, dimethyl ester)
Dimethyl sulfate (Sulfuric acid, dimethyl ester)
Dinitrobenzene, N.O.S.* (Benzene, dinitro-, N.O.S.*)
4,6-Dinitro-o-cresol and salts (Phenol, 2,4-dinitro-6-methyl-, and salts)
2,4-Dinitrophenol (Phenol, 2,4-dinitro-)
2,4-Dinitrotoluene (Benzene, 1-methyl-2,4-dinitro-)
2,6-Dinitrotoluene (Benzene, 1-methyl-2,6-dinitro-)
Di-n-octyl phthalate (1,2-Benzenedicarboxylic acid, dioctyl ester)
1,4-Dioxane (1,4-Diethylene oxide)
Diphenylamine (Benzenamine, N-phenyl-)
1,2-Diphenylhydrazine (Hydrazine, 1,2-diphenyl-)
Di-n-propylnitrosamine (N-Nitroso-di-n-propylamine)
Disulfoton (O,O-diethyl S-[2-(ethylthio)ethyl] phosphorodithioate)
2,4-Dithiobiuret (Thioimidodicarbonic diamide)
Endosulfan (5-Norbornene, 2,3-dimethanol, 1,4,5,6,7,7-hexachloro-, cyclic sulfite)
Endrin and metabolites (1,2,3,4,10,10-hexachloro-6,7-epoxy-1,4,4a,5,6,7,8,8a-octahydro-endo,endo-1,4:5,8-dimethanonaphthalene, and metabolites)
Ethyl carbamate (Urethan) (Carbamic acid, ethyl ester)
Ethyl cyanide (propanenitrile)
Ethylenebisdithiocarbamic acid, salts and esters (1,2-Ethanediylbiscarbamodithioic acid, salts and esters
Ethyleneimine (Aziridine)
Ethylene oxide (Oxirane)
Ethylenethiourea (2-Imidazolidinethione)
Ethyl methacrylate (2-Propenoic acid, 2-methyl-, ethyl ester)
Ethyl methanesulfonate (Methanesulfonic acid, ethyl ester)
Fluoranthene (Benzo[j,k]fluorene)
Fluorine
2-Fluoroacetamide (Acetamide, 2-fluoro-)
Fluoroacetic acid, sodium salt (Acetic acid, fluoro-, sodium salt)
Formaldehyde (Methylene oxide)
Formic acid (Methanoic acid)
Glycidylaldehyde (1-Propanol-2,3-epoxy)
Halomethane, N.O.S.*
Heptachlor (4,7-Methano-1H-indene, 1,4,5,6,7,8,8-heptachloro-3a,4,7,7a-tetrahydro-)
Heptachlor epoxide (alpha, beta, and gamma isomers) (4,7-Methano-1H-indene, 1,4,5,6,7,8,8-heptachloro-2,3-epoxy-3a,4,7,7-tetrahydro-, alpha, beta, and gamma isomers)
Hexachlorobenzene (Benzene, hexachloro-)
Hexachlorobutadiene (1,3-Butadiene, 1,1,2,3,4,4-hexachloro-)
Hexachlorocyclohexane (all isomers) (Lindane and isomers)
Hexachlorocyclopentadiene (1,3-Cyclopentadiene, 1,2,3,4,5,5-hexachloro-)
Hexachlorodibenzo-p-dioxins
Hexachlorodibenzofurans
Hexachloroethane (Ethane, 1,1,1,2,2,2-hexachloro-)
1,2,3,4,10,10-Hexachloro-1,4,4a,5,8,8a-hexahydro-1,4:5,8-endo,endo-dimethanonaphthalene (Hexachlorohexahydro-endo,endo-dimethanonaphthalene)
Hexachlorophene (2,2'-Methylenebis(3,4,6-trichlorophenol))
Hexachloropropene (1-Propene, 1,1,2,3,3,3-hexachloro-)
Hexaethyl tetraphosphate (Tetraphosphoric acid, hexaethyl ester)
Hydrazine (Diamine)
Hydrocyanic acid (Hydrogen cyanide)
Hydrofluoric acid (Hydrogen fluoride)

Hydrogen sulfide (Sulfur hydride)
Hydroxydimethylarsine oxide (Cacodylic acid)
Indeno(1,2,3-cd)pyrene (1,10-(1,2-phenylene)pyrene)
Iodomethane (Methyl iodide)
Iron dextran (Ferric dextran)
Isocyanic acid, methyl ester (Methyl isocyanate)
Isobutyl alcohol (1-Propanol, 2-methyl-)
Isosafrole (Benzene, 1,2-methylenedioxy-4-allyl-)
Kepone (Decachlorooctahydro-1,3,4-Methano-2H-cyclobuta(cd)pentalen-2-one)
Lasiocarpine (2-Butenoic acid, 2-methyl-, 7-[(2,3-dihydroxy-2-(1-methoxyethyl)-3-methyl-1-oxobutoxy)methyl]-2,3,5,7a-tetrahydro-1H-pyrrolizin-1-yl ester)
Lead and compounds, N.O.S.*
Lead acetate (Acetic acid, lead salt)
Lead phosphate (Phosphoric acid, lead salt)
Lead subacetate (Lead, bis(acetato-O)tetrahydroxytri-)
Maleic anhydride (2,5-Furandione)
Maleic hydrazide (1,2-Dihydro-3,6-pyridazinedione)
Malononitrile (Propanedinitrile)
Melphalan (Alanine, 3-[p-bis(2-chloroethyl)amino]phenyl-, L-)
Mercury fulminate (Fulminic acid, mercury salt)
Mercury and compounds, N.O.S.*
Methacrylonitrile (2-Propenenitrile, 2-methyl-)
Methanethiol (Thiomethanol)
Methapyrilene (Pyridine, 2-[(2-dimethylamino)ethyl]-2-thenylamino-)
Metholmyl (Acetimidic acid, N-[(methylcarbamoyl)oxy]thio-, methyl ester
Methoxychlor (Ethane, 1,1,1-trichloro-2,2'-bis(p-methoxyphenyl)-)
2-Methylaziridine (1,2-Propylenimine)
3-Methylcholanthrene (Benz[j]aceanthrylene, 1,2-dihydro-3-methyl-)
Methyl chlorocarbonate (Carbonochloridic acid, methyl ester)
4,4'-Methylene bis(2-chloroaniline) (Benzenamine, 4,4'-methylenebis-(2-chloro-)
Methyl ethyl ketone (MEK) (2-Butanone)
Methyl hydrazine (Hydrazine, methyl-)
2-Methyllactonitrile (Propanenitrile, 2-hydroxy-2-methyl-)
Methyl methacrylate (2-Propenoic acid, 2-methyl-, methyl ester)
Methyl methanesulfonate (Methanesulfonic acid, methyl ester)
2-Methyl-2-(methylthio)propionaldehyde-o-(methylcarbonyl) oxime (Propanal, 2-methyl-2-(methylthio)-, O-[(methylamino)carbonyl]oxime)
N-Methyl-N'-nitro-N-nitrosoguanidine (Guanidine, N-nitroso-N-methyl-N'-nitro-)
Methyl parathion (O,O-dimethyl O-(4-nitrophenyl) phosphorothioate)
Methylthiouracil (4-1H-Pyrimidinone, 2,3-dihydro-6-methyl-2-thioxo-)
Mustard gas (Sulfide, bis(2-chloroethyl)-)
Naphthalene
1,4-Naphthoquinone (1,4-Naphthalenedione)
1-Naphthylamine (alpha-Naphthylamine)
2-Naphthylamine (beta-Naphthylamine)
1-Naphthyl-2-thiourea (Thiourea, 1-naphthalenyl-)
Nickel and compounds, N.O.S.*
Nickel carbonyl (Nickel tetracarbonyl)
Nickel cyanide (Nickel (II) cyanide)
Nicotine and salts (Pyridine, (S)-3-(1-methyl-2-pyrrolidinyl)-, and salts)
Nitric oxide (Nitrogen (II) oxide)
p-Nitroaniline (Benzenamine, 4-nitro-)
Nitrobenzine (Benzene, nitro-)
Nitrogen dioxide (Nitrogen (IV) oxide)
Nitrogen mustard and hydrochloride salt (Ethanamine, 2-chloro-, N-(2-chloroethyl)-N-methyl-, and hydrochloride salt)
Nitrogen mustard N-Oxide and hydrochloride salt (Ethanamine, 2-chloro-, N-(2-chloroethyl)-N-methyl-, and hydrochloride salt)
Nitroglycerine (1,2,3-Propanetriol, trinitrate)
4-Nitrophenol (Phenol, 4-nitro-)
4-Nitroquinoline-1-oxide (Quinoline, 4-nitro-1-oxide-)
Nitrosamine, N.O.S.*
N-Nitrosodi-n-butylamine (1-Butanamine, N-butyl-N-nitroso-)
N-Nitrosodiethanolamine (Ethanol, 2,2'-(nitrosoimino)bis-)
N-Nitrosodiethylamine (Ethanamine, N-ethyl-N-nitroso-)
N-Nitrosodimethylamine (Dimethylnitrosamine)
N-Nitroso-N-ethylurea (Carbamide, N-ethyl-N-nitroso-)
N-Nitrosomethylethylamine (Ethanamine, N-methyl-N-nitroso-)
N-Nitroso-N-methylurea (Carbamide, N-methyl-N-nitroso-)
N-Nitroso-N-methylurethane (Carbamic acid, methylnitroso-, ethyl ester)
N-Nitrosomethylvinylamine (Ethenamine, N-methyl-N-nitroso-)
N-Nitrosomorpholine (Morpholine, N-nitroso-)
N-Nitrosonornicotine (Nornicotine, N-nitroso-)
N-Nitrosopiperidine (Pyridine, hexahydro-N-nitroso-)
Nitrosopyrrolidine (Pyrrole, tetrahydro-, N-nitroso-)
N-Nitrososarcosine (Sarcosine, N-nitroso-)
5-Nitro-o-toluidine (Benzenamine, 2-methyl-5-nitro-)
Octamethylpyrophosphoramide (Diphosphoramide, octamethyl-)
Osmium tetroxide (Osmium (VIII) oxide)
7-Oxabicyclo[2.2.1]heptane-2,3-dicarboxylic acid (Endothal)

Paraldehyde (1,3,5-Trioxane, 2,4,6-trimethyl-)
Parathion (Phosphorothioic acid, O,O-diethyl O-(p-nitrophenyl) ester
Pentachlorobenzene (Benzene, pentachloro-)
Pentachlorodibenzo-p-dioxins
Pentachlorodibenzofurans
Pentachloroethane (Ethane, pentachloro-)
Pentachloronitrobenzene (PCNB) (Benzene, pentachloronitro-)
Pentachlorophenol (Phenol, pentachloro-)
Phenacetin (Acetamide, N-(4-ethoxyphenyl)-)
Phenol (Benzene, hydroxy-)
Phenylenediamine (Benzenediamine)
Phenylmercury acetate (Mercury, acetatophenyl-)
N-Phenylthiourea (Thiourea, phenyl-)
Phosgene (Carbonyl chloride)
Phosphine (Hydrogen phosphide)
Phosphorodithioic acid, O,O-diethyl S-[(ethylthio)methyl] ester (Phorate)
Phosphorothioic acid, O,O-dimethyl O-[p-((dimethylamino)sulfonyl)phenyl] ester (Famphur)
Phthalic acid esters, N.O.S.* (Benzene, 1,2-dicarboxylic acid, esters, N.O.S.*)
Phthalic anhydride (1,2-Benzenedicarboxylic acid anhydride)
2-Picoline (Pyridine, 2-methyl-)
Polychlorinated biphenyl, N.O.S.*
Potassium cyanide
Potassium silver cyanide (Argentate(1-), dicyano-, potassium)
Pronamide (3,5-Dichloro-N-(1,1-dimethyl-2-propynyl)benzamide)
1,3-Propane sultone (1,2-Oxathiolane, 2,2-dioxide)
n-Propylamine (1-Propanamine)
Propylthiouracil (Undecamethylenediamine, N,N'-bis(2-chlorobenzyl)-, dihydrochloride)
2-Propyn-1-ol (Propargyl alcohol)
Pyridine
Reserpine (Yohimban-16-carboxylic acid, 11,17-dimethoxy-18-[(3,4,5-trimethoxybenzoyl)oxy]-, methyl ester)
Resorcinol (1,3-Benzenediol)
Saccharin and salts (1,2-Benzoisothiazolin-3-one, 1,1-dioxide, and salts)
Safrole (Benzene, 1,2-methylenedioxy-4-allyl-)
Selenious acid (Selenium dioxide)
Selenium and compounds, N.O.S.*
Selenium sulfide (Sulfur selenide)
Selenourea (Carbamimidoselenoic acid)
Silver and compounds, N.O.S.*
Silver cyanide
Sodium cyanide
Streptozotocin (D-Glucopyranose, 2-deoxy-2-(3-methyl-3-nitrosoureido)-)
Strontium sulfide
Strychnine and salts (Strychnidin-10-one, and salts)
1,2,4,5-Tetrachlorobenzene (Benzene, 1,2,4,5-tetrachloro-)
2,3,7,8-Tetrachlorodibenzo-p-dioxin (TCDD) (Dibenzo-p-dioxin, 2,3,7,8-tetrachloro-)
Tetrachlorodibenzo-p-dioxins
Tetrachlorodibenzofurans
Tetrachloroethane, N.O.S.* (Ethane, tetrachloro-, N.O.S.*)
1,1,1,2-Tetrachlorethane (Ethane, 1,1,1,2-tetrachloro-)
1,1,2,2-Tetrachlorethane (Ethane, 1,1,2,2-tetrachloro-)
Tetrachloroethane (Ethene, 1,1,2,2-tetrachloro-)
Tetrachloromethane (Carbon tetrachloride)
2,3,4,6,-Tetrachlorophenol (Phenol, 2,3,4,6-tetrachloro-)
Tetraethyldithiopyrophosphate (Dithiopyrophosphoric acid, tetraethyl-ester)
Tetraethyl lead (Plumbane, tetraethyl-)
Tetraethylpyrophosphate (Pyrophosphoric acide, tetraethyl ester)
Tetranitromethane (Methane, tetranitro-)
Thallium and compounds, N.O.S.*
Thallic oxide (Thallium (III) oxide)
Thallium (I) acetate (Acetic acid, thallium (I) salt)
Thallium (I) carbonate (Carbonic acid, dithallium (I) salt)
Thallium (I) chloride
Thallium (I) nitrate (Nitric acid, thallium (I) salt)
Thallium selenite
Thallium (I) sulfate (Sulfuric acid, thallium (I) salt)
Thioacetamide (Ethanethioamide)
Thiosemicarbazide (Hydrazinecarbothioamide)
Thiourea (Carbamide thio-)
Thiuram (Bis(dimethylthiocarbamoyl) disulfide)
Toluene (Benzene, methyl-)
Toluenediamine (Diaminotoluene)
o-Toluidine hydrochloride (Benzenamine, 2-methyl-, hydrochloride)
Tolylene diisocyanate (Benzene, 1,3-diisocyanatomethyl-)
Toxaphene (Camphene, octachloro-)
Tribromomethane (Bromoform)
1,2,4-Trichlorobenzene (Benzene, 1,2,4-trichloro-)
1,1,1-Trichloroethane (Methyl chloroform)
1,1,2-Trichloroethane (Ethane, 1,1,2-trichloro-)
Trichloroethene (Trichloroethylene)
Trichloromethanethiol (Methanethiol, trichloro-)
Trichloromonofluoromethane (Methane, trichlorofluoro-)
2,4,5-Trichlorophenol (Phenol, 2,4,5-trichloro-)
2,4,6-Trichlorophenol (Phenol, 2,4,6-trichloro-)
2,4,5-Trichlorophenoxyacetic acid (2,4,5-T) (Acetic acid, 2,4,5-trichlorophenoxy-)
2,4,5-Trichlorophenoxypropionic acid (2,4,5-TP) (Silvex) (Propionoic acid 2-(2,4,5-trichlorophenoxy)-)

Trichloropropane, N.O.S.* (Propane, trichloro- N.O.S.*)
1,2,3-Trichloropropane (Propane, 1,2,3-trichloro-)
O,O,O-Triethyl phosphorothioate (Phosphorothioic acid, O,O,O-triethyl ester)
sym-Trinitrobenzene (Benzene, 1,3,5-trinitro-)
Tris(1-azridinyl) phosphine sulfide (Phosphine sulfide, tris(1-aziridinyl-)
Tris(2,3-dibromopropyl) phosphate (1-Propanol, 2,3-dibromo-, phosphate)
Trypan blue (2,7-Naphthalenedisulfonic acid, 3,3'-[(3,3'-dimethyl(1,1'-biphenyl)-4,4'-diyl)bis(azo)]bis(5-amino-4-hydroxy-, tetrasodium salt)
Uracil mustard (Uracil 5-[bis(2-chloroethyl)amino]-)
Vanadic acid, ammonium salt (ammonium vanadate)
Vanadium pentoxide (Vanadium (V) oxide)
Vinyl chloride (Ethene, chloro-)
Zinc cyanide
Zinc phosphide

[46 FR 27477, May 20, 1981; 46 FR 29708, June 3, 1981, as amended at 49 FR 5312, Feb. 10, 1984; 50 FR 2000, Jan. 14, 1985]

EFFECTIVE DATE NOTE: At 50 FR 2000, Jan. 14, 1985, Part 261, App. VIII was amended by adding the entries for Hexachlorodibenzo-p-dioxins, Hexachlorodibenzofurans, Pentachlorodibenzo-p-dioxins, Pentachlorodibenzofurans, Tetrachlorodibenzo-p-dioxins, and Tetrachlorodibenzofurans, effective July 15, 1985.

APPENDIX IX—WASTES EXCLUDED UNDER §§ 260-20 AND 260.22

TABLE 1—WASTES EXCLUDED FROM NON-SPECIFIC SOURCES

Facility	Address	Waste description
Kay-Fries, Inc	Stoney Point, NY	Biological aeration lagoon sludge and filter press sludge generated after September 21, 1984 which contain EPA Hazardous Waste Nos F003 and F005 as well as that disposed of in a holding lagoon as of September 21, 1984
Metropolitan Sewer District of Greater Cincinnati	Cincinnati, OH	Sluiced bottom ash sludge (approximately 25,000 cubic yards) contained in the North Lagoon on September 21, 1984, which contains EPA Hazardous Wastes Nos F001, F002, F003, F004 and F005

TABLE 2—WASTES EXCLUDED FROM SPECIFIC SOURCES

Facility	Address	Waste description
(Reserved)		

TABLE 3—WASTES EXCLUDED FROM COMMERCIAL CHEMICAL PRODUCTS, OFF-SPECIFICATION SPECIES, CONTAINER RESIDUES, AND SOIL RESIDUES THEREOF

Facility	Address	Waste description
Union Carbide Corp	Taft, LA	Contaminated soil (approximately 11,000 cubic yards), which contains acrolein in concentrations of less than 9 ppm

[49 FR 37070, Sept. 21, 1984]

APPENDIX X—METHOD OF ANALYSIS FOR CHLORINATED DIBENZO-P-DIOXINS AND -DIBENZOFURANS [1,2,3,4]

Method 8280

1. *Scope and Application*

[1] This method is appropriate for the analysis of tetra-, penta-, and hexachlorinated dibenzo-p-dioxins and -dibenzofurans.

[2] Analytical protocol for determination of TCDDs in phenolic chemical wastes and soil samples obtained from the proximity of chemical dumps. T.O. Tiernan and M. Taylor, Brehm Laboratory, Wright State University, Dayton, OH 45435.

[3] Analytical protocol for determination of chlorinated dibenzo-p-dioxins and chlorinated dibenzofurans in river water. T.O. Tiernan and M. Taylor, Brehm Laboratory, Wright State University, Dayton, OH 45435.

[4] In general, the techniques that should be used to handle these materials are those which are followed for radioactive or infectious laboratory materials. Assistance in evaluating laboratory practices may be obtained from industrial hygienists and persons specializing in safe laboratory practices. Typical infectious waste incinerators are probably not satisfactory devices for disposal of materials highly contaminated with CDDs or CDFs. Safety instructions are outlined in EPA Test Method 613(4.0)

See also 1) "Program for monitoring potential contamination in the laboratory following the handling and analyses of chlorinated dibenzo-p-dioxins and dibenzofurans by F. D. Hileman et al., *In*, Human and En-

Continued

1.1 This method measures the concentration of chlorinated dibenzo-p-dioxins and chlorinated dibenzofurans in chemical wastes including still bottoms, filter aids, sludges, spent carbon, and reactor residues, and in soils.

1.2 The sensitivity of this method is dependent upon the level of interferences.

1.3 This method is recommended for use only by analysts experienced with residue analysis and skilled in mass spectral analytical techniques.

1.4 Because of the extreme toxicity of these compounds, the analyst must take necessary precautions to prevent exposure to himself, or to others, of materials known or believed to contain CDDs or CDFs.

2. *Summary of the Method*

2.1 This method is an analytical extraction cleanup procedure, and capillary column gas chromatograph-low resolution mass spectrometry method, using capillary column GC/MS conditions and internal standard techniques, which allow for the measurement of PCDDs and PCDFs in the extract.

2.2 If interferences are encountered, the method provides selected general purpose cleanup procedures to aid the analyst in their elimination.

3. *Interferences*

3.1 Solvents, reagents, glassware, and other sample processing hardware may yield discrete artifacts and/or elevated baselines causing misinterpretation of gas chromatograms. All of these materials must be demonstrated to be free from interferences under the conditions of the analysis by running method blanks. Specific selection of reagents and purification of solvents by distillation in all-glass systems may be required.

3.2 Interferences co-extracted from the samples will vary considerably from source to source, depending upon the diversity of the industry being sampled. PCDD is often associated with other interfering chlorinated compounds such as PCB's which may be at concentrations several orders of magnitude higher than that of PCDD. While general cleanup techniques are provided as part of this method, unique samples may require additional cleanup approaches to achieve the sensitivity stated in Table 1.

3.3 The other isomers of tetrachlorodibenzo-p-dioxin may interfere with the measurement of 2,3,7,8-TCDD. Capillary column gas chromatography is required to resolve those isomers that yield virtually identical mass fragmentation patterns.

4. *Apparatus and Materials*

4.1. Sampling equipment for discrete or composite sampling

4.1.1 Grab sample bottle—amber glass, 1-liter or 1-quart volume. French or Boston Round design is recommended. The container must be washed and solvent rinsed before use to minimize interferences.

4.1.2. Bottle caps—threaded to screw on to the sample bottles. Caps must be lined with Teflon. Solvent washed foil, used with the shiny side towards the sample, may be substituted for the Teflon if sample is not corrosive.

4.1.3. Compositing equipment—automatic or manual composing system. No tygon or rubber tubing may be used, and the system must incorporate glass sample containers for the collection of a minimum of 250 ml. Sample containers must be kept refrigerated after sampling.

4.2 Water bath—heated, with concentric ring cover, capable of temperature control (±2 °C). The bath should be used in a hood.

4.3 Gas chromatograph/mass spectrometer data system.

4.3.1 Gas chromatograph: An analytical system with a temperature-programmable gas chromatograph and all required accessories including syringes, analytical columns, and gases.

4.3.2 Column: SP-2250 coated on a 30 m long × 0.25 mm I.D. glass column (Supelco No. 2-3714 or equivalent). Glass capillary column conditions: Helium carrier gas at 30 cm/sec linear velocity run splitless. Column temperature is 210 °C.

4.3.3 Mass spectrometer: Capable of scanning from 35 to 450 amu every 1 sec or less, utilizing 70 volts (nominal) electron energy in the electron impact ionization mode and producing a mass spectrum which meets all the criteria in Table 2 when 50 ng of decafluorotriphenyl-phosphine (DFTPP) is injected through the GC inlet. The system must also be capable of selected ion monitoring (SIM) for at least 4 ions simultaneously, with a cycle time of 1 sec or less. Minimum integration time for SIM is 100 ms. Selected ion monitoring is verified by injecting .015 ng of TCDD Cl^{37} to give a minimum signal to noise ratio of 5 to 1 at mass 328.

4.3.4 GC/MS interface. Any GC-to-MS interface that gives acceptable calibration points at 50 ng per injection for each compound of interest and achieves acceptable tuning performance criteria (see Sections 6.1-6.3) may be used. GC-to-MS interfaces constructed of all glass or glass-lined materials are recommended. Glass can be deactivated by silanizing with dichlorodimethylsilane. The interface must be capable of

---

vironmental Risks of Chlorinated Dioxins and Related Compounds, R.E. Tucker, et al, eds., Plenum Publishing Corp., 1983. 2) Safety procedures outlined in EPA Method 613 Federal Register volume 44, No. 233, December 3, 1979.

transporting at least 10 ng of the components of interest from the GC to the MS.

4.3.5 Data system: A computer system must be interfaced to the mass spectrometer. The system must allow the continuous acquisition and storage on machine-readable media of all mass spectra obtained throughout the duration of the chromatographic program. The computer must have software that can search any GC/MS data file for ions of a specific mass and that can plot such ion abundances versus time or scan number. This type of plot is defined as an Extracted Ion Current Profile (EICP). Software must also be able to integrate the abundance, in any EICP, between specified time or scan number limits.

4.4 Pipettes-Disposable, Pasteur, 150 mm long × 5 mm ID (Fisher Scientific Co., No. 13-678-6A or equivalent).

4.5 Flint glass bottle (Teflon-lined screw cap).

4.6 Reacti-vial (silanized) (Pierce Chemical Co.).

5. *Reagents*

5.1 Potassium hydroxide-(ACS), 2% in distilled water.

5.2 Sulfuric acid-(ACS), concentrated.

5.3 Methylene chloride, hexane, benzene, petroleum ether, methanol, tetradecane-pesticide quality or equivalent.

5.4 Prepare stock standard solutions of TCDD and ^{37}Cl-TCDD (molecular weight 328) in a glove box. The stock solutions are stored in a glovebox, and checked frequently for signs of degradation or evaporation, especially just prior to the preparation of working standards.

5.5 Alumina-basic, Woelm; 80/200 mesh. Before use activate overnight at 600°C, cool to room temperature in a dessicator.

5.6 Prepurified nitrogen gas

6.0 *Calibration*

6.1 Before using any cleanup procedure, the analyst must process a series of calibration standards through the procedure to validate elution patterns and the absence of interferences from reagents.

6.2 Prepare GC/MS calibration standards for the internal standard technique that will allow for measurement of relative response factors of at least three CDD/^{37}CDD ratios. Thus, for TCDDs, at least three TCDD/^{37}Cl-TCDD and TCDF/^{37}Cl-TCDF must be determined.[6] The ^{37}Cl-TCDD/F concentration in the standard should be fixed and selected to yield a reproducible response at the most sensitive setting of the mass spectrometer. Response factors for PCDD and HxCDD may be determined by measuring the response of the tetrachloro-labelled compounds relative to that of the unlabelled 1,2,3,4- or 2,3,7,8-TCDD, 1,2,3,4,7-PCDD or 1,2,3,4,7,8-HxCDD, which are commercially available.[6]

6.3 Assemble the necessary GC/MS apparatus and establish operating parameters equivalent to those indicated in Section 11.1 of this method. Calibrate the GC/MS system according to Eichelberger, et al. (1975) by the use of decafluorotriphenyl phosphine (DFTPP). By injecting calibration standards, establish the response factors for CDDs *vs.* ^{37}Cl-TCDD, and for CDFs *vs.* ^{37}Cl-TCDF. The detection limit provided in Table 1 should be verified by injecting .015 ng of ^{37}Cl-TCDD which should give a minimum signal to noise ratio of 5 to 1 at mass 328.

7. *Quality Control*

7.1 Before processing any samples, the analyst should demonstrate through the analysis of a distilled water method blank, that all glassware and reagents are interference-free. Each time a set of samples is extracted, or there is a change in reagents, a method blank should be processed as a safeguard against laboratory contamination.

7.2 Standard quality assurance practices must be used with this method. Field replicates must be collected to measure the precision of the sampling technique. Laboratory replicates must be analyzed to establish the precision of the analysis. Fortified samples must be analyzed to establish the accuracy of the analysis.

8. *Sample Collection, Preservation, and Handling*

8.1 Grab and composite samples must be collected in glass containers. Conventional sampling practices should be followed, except that the bottle must not be prewashed with sample before collection. Composite samples should be collected in glass containers in accordance with the requirements of the RCRA program. Sampling equipment must be free of tygon and other potential sources of contamination.

8.2 The samples must be iced or refrigerated from the time of collection until ex-

---

[6] ^{37}Cl-labelled 2,3,7,8-TCDD and 2,3,7,8-TCDF are available from K.O.R. Isotopes, and Cambridge Isotopes, Inc., Cambridge, MA. Proper standardization requires the use of a specific labelled isomer for each congener to be determined. However, the only labelled isomers readily available are ^{37}Cl-2,3,7,8-TCDD and ^{37}Cl-2,3,7,8-TCDF. This method therefore uses these isomers as surrogates for the CDDs and CDFs. When other labelled CDDs and CDFs are available, their use will be required.

[6] This procedure is adopted because standards are not available for most of the CDDs and CDFs, and assumes that all the congeners will show the same response as the unlabelled congener used as a standard. Although this assumption may not be true in all cases, the error will be small.

traction Chemical preservatives should not be used in the field unless more than 24 hours will elapse before delivery to the laboratory. If an aqueous sample is to be extracted and the sample will not be extracted within 48 hours of collection, the sample should be adjusted to a pH range of 6.0-8.0 with sodium hydroxide or sulfuric acid.

8.3 All samples must be extracted within 7 days and completely analyzed within 30 days of collection.

9. *Extraction and Cleanup Procedures*

9.1 Use an aliquot of 1-10 g sample of the chemical waste or soil to be analyzed. Soils should be dried using a stream of prepurified nitrogen and pulverized in a ball-mill or similar device. Perform this operation in a clear area with proper hood space. Transfer the sample to a tared 125 ml flint glass bottle (Teflon-lined screw cap) and determine the weight of the sample. Add an appropriate quantity of ^{37}Cl-labelled 2,3,7,8-TCDD (adjust the quantity according to the required minimum detectable concentration), which is employed as an internal standard.

9.2 Extraction

9.2.1 Extract chemical waste samples by adding 10 ml methanol, 40 ml petroleum ether, 50 ml doubly distilled water, and then shaking the mixture for 2 minutes. Tars should be completely dissolved in any of the recommended neat solvents. Activated carbon samples must be extracted with benzene using method 3540 in SW-846 (Test Methods for Evaluating Solid Waste—Physical/Chemical Methods, available from G.P.O. Stock #055-022-81001-2). Quantitatively transfer the organic extract or dissolved sample to a clean 250 ml flint glass bottle (Teflon lined screw cap), add 50 ml doubly distilled water and shake for 2 minutes Discard the aqueous layer and proceed with Step 9.3

9.2.2 Extract soil samples by adding 40 ml of petroleum ether to the sample, and then shaking for 20 minutes. Quantitatively transfer the organic extract to a clean 250 ml flint glass bottle (Teflon-lined screw cap), add 50 ml doubly distilled water and shake for 2 minutes Discard the aqueous layer and proceed with Step 9.3.

9.3 Wash the organic layer with 50 ml of 20% aqueous potassium hydroxide by shaking for 10 minutes and then remove and discard the aqueous layer

9.4 Wash the organic layer with 50 ml of doubly distilled water by shaking for 2 minutes, and discard the aqueous layer.

9.5 Cautiously add 50 ml concentrated sulfuric acid and shake for 10 minutes Allow the mixture to stand until layers separate (approximately 10 minutes), and remove and discard the acid layer Repeat acid washing until no color is visible in the acid layer

9.6 Add 50 ml of doubly distilled water to the organic extract and shake for 2 minutes Remove and discard the aqueous layer and dry the organic layer by adding 10g of anhydrous sodium sulfate.

9.7 Concentrate the extract to incipient dryness by heating in a 55° C water bath and simultaneously flowing a stream of prepurified nitrogen over the extract. Quantitatively transfer the residue to an alumina microcolumn fabricated as follows:

9.7.1 Cut off the top section of a 10 ml disposable Pyrex pipette at the 4.0 ml mark and insert a plug of silanized glass wool into the tip of the lower portion of the pipette

9.7.2 Add 2.8g of Woelm basic alumina (previously activated at 600° C overnight and then cooled to room temperature in a desiccator just prior to use).

9.7.3 Transfer sample extract with a small volume of methylene chloride.

9.8 Elute the microcolumn with 10 ml of 3% methylene choiride-in-hexane followed by 15 ml of 20% methylene chloride-in-hexane and discard these effluents. Elute the column with 15 ml of 50% methylene chloride-in-hexane and concentrate this effluent (55° C water bath, stream of prepurified nitrogen) to about 0.3-0.5 ml.

9.9 Quantitatively transfer the residue (using methylene chloride to rinse the container) to a silanized Reacti-Vial (Pierce Chemical Co.). Evaporate, using a stream of prepurified nitrogen, almost to dryness, rinse the walls of the vessel with approximately 0.5 ml methylene chloride, evaporate just to dryness, and tightly cap the vial Store the vial at 5° C until analysis, at which time the sample is reconstituted by the addition of tridecane.

9.10 Approximately 1 hour before GC-MS (HRGC-LRMS) analysis, dilute the residue in the micro-reaction vessel with an appropriate quantity of tridecane Gently swirl the tridecane on the lower portion of the vessel to ensure dissolution of the CDDs and CDFs. Analyze a sample by GC/EC to provide insight into the complexity of the problem, and to determine the manner in which the mass spectrometer should be used. Inject an appropriate aliquot of the sample into the GC-MS instrument, using a syringe.

9.11 If, upon preliminary GC-MS analysis, the sample appears to contain interfering substances which obscure the analyses for CDDs and CDFs, high performance liquid chromatographic (HPLC) cleanup of the extract is accomplished, prior to further GC-MS analysis

10. *HPLC Cleanup Procedure*[1]

[1] For cleanup see also method #8320 or #8330, SW-846, Test Methods for Evaluating Solid Waste, Physical Chemical Methods (1982).

10.1 Place approximately 2 ml of hexane in a 50 ml flint glass sample bottle fitted with a Teflon-lined cap.

10.2 At the appropriate retention time, position sample bottle to collect the required fraction.

10.3 Add 2 ml of 5% (w/v) sodium carbonate to the sample fraction collected and shake for one minute.

10.4 Quantitatively remove the hexane layer (top layer) and transfer to a micro-reaction vessel.

10.5 Concentrate the fraction to dryness and retain for further analysis.

11. *GC/MS Analysis*

11.1 The following column conditions are recommended: Glass capillary column conditions: SP-2250 coated on a 30 m long x 0.25 mm I.D. glass column (Supelco No. 2-3714, or equivalent) with helium carrier gas at 30 cm/sec linear velocity, run splitless. Column temperature is 210°C. Under these conditions the retention time for TCDDs is about 9.5 minutes. Calibrate the system daily with, a minimum, three injections of standard mixtures.

11.2 Calculate response factors for standards relative to ^{37}Cl-TCDD/F (see Section 12).

11.3 Analyze samples with selected ion monitoring of at least two ions from Table 3. Proof of the presence of CDD or CDF exists if the following conditions are met:

11.3.1 The retention time of the peak in the sample must match that in the standard, within the performance specifications of the analytical system.

11.3.2 The ratio of ions must agree within 10% with that of the standard.

11.3.3 The retention time of the peak maximum for the ions of interest must exactly match that of the peak.

11.4 Quantitate the CDD and CDF peaks from the response relative to the ^{37}Cl-TCDD/F internal standards. Recovery of the internal standard should be greater than 50 percent.

11.5 If a response is obtained for the appropriate set of ions, but is outside the expected ratio, a co-eluting impurity may be suspected. In this case, another set of ions characteristic of the CDD/CDF molecules should be analyzed. For TCDD a good choice of ions is m/e 257 and m/e 259. For TCDF a good choice of ions is m/e 241 and 243. These ions are useful in characterizing the molecular structure to TCDD or TCDF. For analysis of TCDD good analytical technique would require using all four ions, m/e 257, 320, 322, and 328, to verify detection and signal to noise ratio of 5 to 1. Suspected impurities such as DDE, DDD, or PCB residues can be confirmed by checking for their major fragments. These materials can be removed by the cleanup columns. Failure to meet criteria should be explained in the report, or the sample reanalyzed.

11.6 If broad background interference restricts the sensitivity of the GC/MS analysis, the analyst should employ cleanup procedures and reanalyze by GC/MS. See section 10.0.

11.7 In those circumstances where these procedures do not yield a definitive conclusion, the use of high resolution mass spectrometry is suggested.

12. *Calculations*

12.1 Determine the concentration of individual compounds according to the formula:

$$\text{Concentration, } \mu g/gm = \frac{A \times A_s}{G \times A_{is} \times R_f}$$

where:

A = µg of internal standard added to the sample [6]

G = gm of sample extracted

A_s = area of characteristic ion of the compound being quantified.

A_{is} = area of characteristic ion of the internal standard

R_f = response factor [6]

Response factors are calculated using data obtained from the analysis of standards according to the formula:

[6]The proper amount of standard to be used is determined from the calibration curve (See Section 6.0).

[6]If standards for PCDDs/Fs and HxCDDs/Fs are not available, response factors for ions derived from these congeners are calculated relative to ^{37}Cl-TCDD/F. The analyst may use response factors for 1,2,3,4- or 2,3,7,8-TCDD, 1,2,3,4,7-PeCDD, or 1,2,3,4,7,8-HxCDD for quantitation of TCDDs/Fs, PeCDDs/Fs and HxCDDs/Fs, respectively. Implicit in this requirement is the assumption that the same response is obtained from PCDDs/Fs ccontaining the same numbers of chlorine atoms

$$RF = \frac{A_s \times C_{is}}{A_{is} \times C_s}$$

where

C_{is} = concentration of the internal standard

C_s = concentration of the standard compound

12.2 Report results in micrograms per gram without correction for recovery data. When duplicate and spiked samples are analyzed, all data obtained should be reported.

12.3 Accuracy and Precision. No data are available at this time.

TABLE 1—GAS CHROMATOGRAPHY OF TCDD

Column	Retention time (min)	Detection limit (µg/kg)[1]
Glass capillary	9.5	0.003

[1] Detection limit for liquid samples is 0.003 µg/l. This is calculated from the minimum detectable GC response being equal to five times the GC background noise assuming a 1 ml effective final volume of the 1 liter sample extract and a GC injection of 5 microliters. Detection levels apply to both electron capture and GC/MS detection. For further details see 44 FR 69526 (December 3, 1979).

TABLE 2—DFTPP KEY IONS AND ION ABUNDANCE CRITERIA[1]

Mass	Ion abundance criteria
51	30-60% of mass 198
68	Less than 2% of mass 69
70	Less than 2% of mass 69
127	40-60% of mass 198
197	Less than 1% of mass 198
198	Base peak, 100% relative abundance
199	5-9% of mass 198
275	10-30% of mass 198
365	Greater than 1% of mass 198
441	Present but less than mass 443
442	Greater than 40% of mass 198
443	17-23% of mass 442

[1] J. W. Eichelberger, L.E. Harris and W.L. Budde, 1975, Reference compound to calibrate ion abundance measurement in gas chromatography-mass spectrometry, Analytical Chemistry 47, 995.

TABLE 3—LIST OF ACCURATE MASSES MONITORED USING GC SELECTED-ION MONITORING, LOW RESOLUTION, MASS SPECTROMETRY FOR SIMULTANEOUS DETERMINATION OF TETRA-, PENTA-, AND HEXACHLORINATED DIBENZO-p-DIOXINS AND DIBENZOFURANS

Class of chlorinated dibenzodioxin or dibenzofuran	Number of chlorine substituents (x)	Monitored m/z for dibenzodioxins $C_{12}H_{8-x}O_2Cl_x$	Monitored m/z for dibenzofurans $C_{12}H_{8-x}OCl_x$	Approximate theoretical ratio expected on basis of isotopic abundance
Tetra	4	[1] 319.897	[1] 303.902	0.74
		321.894	305.903	1.00
		[2] 327.885	[2] 311.894	
		[3] 256.933		0.21
		[3] 258.930		0.20
Penta	5	[1] 353.858	[1] 337.863	0.57
		355.855	339.860	1.00
Hexa	6	389.816	373.821	1.00
		391.813	375.818	0.87

[1] Molecular ion peak.
[2] C_{12}—labelled standard peaks.
[3] Ions which can be monitored in TCDD analyses for confirmation purposes.

[50 FR 2001, Jan. 14, 1985]

EFFECTIVE DATE NOTE: At 50 FR 2001, Jan. 14, 1985, Part 261, App. X was added, effective July 15, 1985.

PART 262—STANDARDS APPLICABLE TO GENERATORS OF HAZARDOUS WASTE

Subpart A—General

Sec.
262.10 Purpose, scope, and applicability
262.11 Hazardous waste determination
262.12 EPA identification numbers

B. HAZARDOUS WASTE

PART 234
SUBPART O
INCINERATORS
40 CFR 264.340 - 264.347

6060A

hazardous wastes FO20, FO21, FO22, FO23, FO26, and FO27 in order to reduce the possibility of migration of these wastes to ground water, surface water, or air so as to protect human health and the environment.

[50 FR 2004, Jan. 14, 1985]

EFFECTIVE DATE NOTE: At 50 FR 2004, Jan. 14, 1985, § 264.317 was added, effective July 15, 1985.

§§ 264.318—264.339 [Reserved]

Subpart O—Incinerators

SOURCE: 46 FR 7678, Jan. 23, 1981, unless otherwise noted.

§ 264.340 Applicability.

(a) The regulations in this subpart apply to owners or operators of facilities that incinerate hazardous waste, except as § 264.1 provides otherwise. The following facility owners or operators are considered to incinerate hazardous waste:

(1) Owners or operators of hazardous waste incinerators (as defined in § 260.10 of this chapter); and

(2) Owners or operators who burn hazardous waste in boilers or in industrial furnaces in order to destroy the wastes.

(b) After consideration of the waste analysis included with Part B of the permit application, the Regional Administrator, in establishing the permit conditions, must exempt the applicant from all requirements of this Subpart except § 264.341 (Waste analysis) and § 264.351 (Closure),

(1) If the Regional Administrator finds that the waste to be burned is:

(i) Listed as a hazardous waste in Part 261, Subpart D, of this chapter solely because it is ignitable (Hazard Code I), corrosive (Hazard Code C), or both; or

(ii) Listed as a hazardous waste in Part 261, Subpart D, of this chapter solely because it is reactive (Hazard Code R) for characteristics other than those listed in § 261.23(a) (4) and (5), and will not be burned when other hazardous wastes are present in the combustion zone; or

(iii) A hazardous waste solely because it possesses the characteristic of ignitability, corrosivity, or both, as determined by the test for characteristics of hazardous wastes under Part 261, Subpart C, of this chapter; or

(iv) A hazardous waste solely because it possesses any of the reactivity characteristics described by § 261.23(a) (1), (2), (3), (6), (7), and (8) of this chapter, and will not be burned when other hazardous wastes are present in the combustion zone; and

(2) If the waste analysis shows that the waste contains none of the hazardous constituents listed in Part 261, Appendix VIII, of this chapter, which would reasonably be expected to be in the waste.

(c) If the waste to be burned is one which is described by paragraphs (b)(1)(i), (b)(1)(ii), (b)(1)(iii), or (b)(1)(iv) of this section and contains insignificant concentrations of the hazardous constituents listed in Part 261, Appendix VIII, of this chapter, then the Regional Administrator may, in establishing permit conditions, exempt the applicant from all requirements of this Subpart, except § 264.341 (Waste analysis) and § 264.351 (Closure), after consideration of the waste analysis included with Part B of the permit application, unless the Regional Administrator finds that the waste will pose a threat to human health and the environment when burned in an incinerator.

(d) The owner or operator of an incinerator may conduct trial burns subject only to the requirements of § 270.62 of this chapter (Short term and incinerator permits).

[46 FR 7678, Jan. 23, 1981, as amended at 47 FR 27532, June 24, 1982; 48 FR 14295, Apr. 1, 1983; 50 FR 665, Jan. 4, 1985]

EFFECTIVE DATE NOTE: At 50 FR 665, Jan. 4, 1985, § 264.340(a) was revised, effective July 5, 1985. For the convenience of the user, the superseded text is set out below:

§ 264.340 Applicability.

(a) The regulations in this Subpart apply to owners and operators of facilities that incinerate hazardous waste, except as § 264.1 provides otherwise.

* * * * *

§ 264.341 Waste analysis.

(a) As a portion of the trial burn plan required by § 270.62 of this chap-

ter, or with Part B of the permit application, the owner or operator must have included an analysis of the waste feed sufficient to provide all information required by § 270.62(b) or § 270.19 of this chapter. Owners or operators of new hazardous waste incinerators must provide the information required by § 270.62(c) or § 270.19 of this chapter to the greatest extent possible.

(b) Throughout normal operation the owner or operator must conduct sufficient waste analysis to verify that waste feed to the incinerator is within the physical and chemical composition limits specified in his permit (under § 264.345(b)).

(Approved by the Office of Management and Budget under control number 2050-0002)

[46 FR 7678, Jan. 23, 1981, as amended at 47 FR 27532, June 24, 1982; 48 FR 14295, Apr. 1, 1983; 48 FR 30115, June 30, 1983; 50 FR 4514, Jan. 31, 1985]

§ 264.342 Principal organic hazardous constituents (POHCs).

(a) Principal Organic Hazardous Constituents (POHCs) in the waste feed must be treated to the extent required by the performance standard of § 264.343.

(b)(1) One or more POHCs will be specified in the facility's permit, from among those constituents listed in Part 261, Appendix VIII of this chapter, for each waste feed to be burned. This specification will be based on the degree of difficulty of incineration of the organic constituents in the waste and on their concentration or mass in the waste feed, considering the results of waste analyses and trial burns or alternative data submitted with Part B of the facility's permit application. Organic constituents which represent the greatest degree of difficulty of incineration will be those most likely to be designated as POHCs. Constituents are more likely to be designated as POHCs if they are present in large quantities or concentrations in the waste.

(2) Trial POHCs will be designated for performance of trial burns in accordance with the procedure specified in § 270.62 of this chapter for obtaining trial burn permits.

[46 FR 7678, Jan. 23, 1981, as amended at 48 FR 14295, Apr. 1, 1983]

§ 264.343 Performance standards.

An incinerator burning hazardous waste must be designed, constructed, and maintained so that, when operated in accordance with operating requirements specified under § 264.345, it will meet the following performance standards:

(a)(1) Except as provided in paragraph (a)(2), an incinerator burning hazardous waste must achieve a destruction and removal efficiency (DRE) of 99.99% for each principal organic hazardous constituent (POHC) designated (under § 264.342) in its permit for each waste feed. DRE is determined for each POHC from the following equation:

$$DRE = \frac{(W_{in} - W_{out})}{W_{in}} \times 100\%$$

where:

W_{in} = mass feed rate of one principal organic hazardous constituent (POHC) in the waste stream feeding the incinerator

and

W_{out} = mass emission rate of the same POHC present in exhaust emissions prior to release to the atmosphere.

(2) An incinerator burning hazardous wastes FO20, FO21, FO22, FO23, FO26, or FO27 must achieve a destruction and removal efficiency (DRE) of 99.9999% for each principal organic hazardous constituent (POHC) designated (under § 264.342) in its permit. This performance must be demonstrated on POHCs that are more difficult to incinerate than tetra-, penta-, and hexachlorodibenzo-*p*-dioxins and dibenzofurans. DRE is determined for each POHC from the equation in § 264.343(a)(1). In addition, the owner or operator of the incinerator must notify the Regional Administrator of his intent to incinerate hazardous wastes FO20, FO21, FO22, FO23, FO26, or FO27.

(b) An incinerator burning hazardous waste and producing stack emissions of more than 1.8 kilograms per hour (4 pounds per hour) of hydrogen

chloride (HCl) must control HCl emissions such that the rate of emission is no greater than the larger of either 1.8 kilograms per hour or 1% of the HCl in the stack gas prior to entering any pollution control equipment.

(c) An incinerator burning hazardous waste must not emit particulate matter in excess of 180 milligrams per dry standard cubic meter (0.08 grains per dry standard cubic foot) when corrected for the amount of oxygen in the stack gas according to the formula:

$$P_c = P_m \times \frac{14}{21 - Y}$$

Where P_c is the corrected concentration of particulate matter, P_m is the measured concentration of particulate matter, and Y is the measured concentration of oxygen in the stack gas, using the Orsat method for oxygen analysis of dry flue gas, presented in Part 60, Appendix A (Method 3), of this Chapter. This correction procedure is to be used by all hazardous waste incinerators except those operating under conditions of oxygen enrichment. For these facilities, the Regional Administrator will select an appropriate correction procedure, to be specified in the facility permit.

(d) For purposes of permit enforcement, compliance with the operating requirements specified in the permit (under § 264.345) will be regarded as compliance with this section. However, evidence that compliance with those permit conditions is insufficient to ensure compliance with the performance requirements of this section may be "information" justifying modification, revocation, or reissuance of a permit under § 270.41 of this chapter.

[46 FR 7678, Jan. 23, 1981, as amended at 47 FR 27532, June 24, 1982, 48 FR 14295, Apr 1, 1983, 50 FR 2005, Jan. 14, 1985]

EFFECTIVE DATE NOTE: At 50 FR 2005, Jan 14, 1985, § 264 343(a) was revised, effective July 15, 1985 For the convenience of the user, the superseded text is set out below

§ 264 343 Performance standards.

* * * * *

(a) An incinerator burning hazardous waste must achieve a destruction and removal efficiency (DRE) of 99.99% for each principal organic hazardous constituent (POHC) designated (under § 264.342) in its permit for each waste feed. DRE is determined for each POHC from the following equation:

$$DRE = \frac{(W_{in} - W_{out})}{W_{in}} \times 100\%$$

Where:

W_{in} = Mass feed rate of one principal organic hazardous constituent (POHC) in the waste stream feeding the incinerator, and

W_{out} = Mass emission rate of the same POHC present in exhaust emissions prior to release to the atmosphere.

* * * * *

§ 264.344 Hazardous waste incinerator permits.

(a) The owner or operator of a hazardous waste incinerator may burn only wastes specified in his permit and only under operating conditions specified for those wastes under § 264.345, except:

(1) In approved trial burns under § 270.62 of this chapter; or

(2) Under exemptions created by § 264.340.

(b) Other hazardous wastes may be burned only after operating conditions have been specified in a new permit or a permit modification as applicable. Operating requirements for new wastes may be be based on either trial burn results or alternative data included with Part B of a permit application under § 270.19 of this chapter.

(c) The permit for a new hazardous waste incinerator must establish appropriate conditions for each of the applicable requirements of this Subpart, including but not limited to allowable waste feeds and operating conditions necessary to meet the requirements of § 264.345, sufficient to comply with the following standards.

(1) For the period beginning with initial introduction of hazardous waste to the incinerator and ending with initiation of the trial burn, and only for the minimum time required to establish operating conditions required in

paragraph (c)(2) of this section, not to exceed a duration of 720 hours operating time for treatment of hazardous waste, the operating requirements must be those most likely to ensure compliance with the performance standards of § 264.343, based on the Regional Administrator's engineering judgment. The Regional Administrator may extend the duration of this period once for up to 720 additional hours when good cause for the extension is demonstrated by the applicant.

(2) For the duration of the trial burn, the operating requirements must be sufficient to demonstrate compliance with the performance standards of § 264.343 and must be in accordance with the approved trial burn plan;

(3) For the period immediately following completion of the trial burn, and only for the minimum period sufficient to allow sample analysis, data computation, and submission of the trial burn results by the applicant, and review of the trial burn results and modification of the facility permit by the Regional Administrator, the operating requirements must be those most likely to ensure compliance with the performance standards of § 264.343, based on the Regional Administrator's engineering judgement.

(4) For the remaining duration of the permit, the operating requirements must be those demonstrated, in a trial burn or by alternative data specified in § 270.19(c) of this chapter, as sufficient to ensure compliance with the performance standards of § 264.343.

(Approved by the Office of Management and Budget under control number 2050-0002)

[46 FR 7678, Jan. 23, 1981, as amended at 47 FR 27532, June 24, 1982; 48 FR 14295, Apr. 1, 1983; 50 FR 4514, Jan. 31, 1985]

§ 264.345 Operating requirements.

(a) An incinerator must be operated in accordance with operating requirements specified in the permit. These will be specified on a case-by-case basis as those demonstrated (in a trial burn or in alternative data as specified in § 264.344(b) and included with Part B of a facility's permit application) to be sufficient to comply with the performance standards of § 264.343.

(b) Each set of operating requirements will specify the composition of the waste feed (including acceptable variations in the physical or chemical properties of the waste feed which will not affect compliance with the performance requirement of § 264.343) to which the operating requirements apply. For each such waste feed, the permit will specify acceptable operating limits including the following conditions:

(1) Carbon monoxide (CO) level in the stack exhaust gas;

(2) Waste feed rate;

(3) Combustion temperature;

(4) An appropriate indicator of combustion gas velocity;

(5) Allowable variations in incinerator system design or operating procedures; and

(6) Such other operating requirements as are necessary to ensure that the performance standards of § 264.343 are met.

(c) During start-up and shut-down of an incinerator, hazardous waste (except wastes exempted in accordance with § 264.340) must not be fed into the incinerator unless the incinerator is operating within the conditions of operation (temperature, air feed rate, etc.) specified in the permit.

(d) Fugitive emissions from the combustion zone must be controlled by:

(1) Keeping the combustion zone totally sealed against fugitive emissions; or

(2) Maintaining a combustion zone pressure lower than atmospheric pressure; or

(3) An alternate means of control demonstrated (with Part B of the permit application) to provide fugitive emissions control equivalent to maintenance of combustion zone pressure lower than atmospheric pressure.

(e) An incinerator must be operated with a functioning system to automatically cut off waste feed to the incinerator when operating conditions deviate from limits established under paragraph (a) of this Section.

(f) An incinerator must cease operation when changes in waste feed incinerator design, or operating condi

tions exceed limits designated in its permit.

(Approved by the Office of Management and Budget under control number 2050-0002)

[46 FR 7678, Jan 23, 1981 as amended at 47 FR 27532, June 24, 1982, 50 FR 4514, Jan 31 1985]

§ 264.346 [Reserved]

§ 264.347 Monitoring and inspections.

(a) The owner or operator must conduct, as a minimum, the following monitoring while incinerating hazardous waste:

(1) Combustion temperature, waste feed rate, and the indicator of combustion gas velocity specified in the facility permit must be monitored on a continuous basis.

(2) CO must be monitored on a continuous basis at a point in the incinerator downstream of the combustion zone and prior to release to the atmosphere.

(3) Upon request by the Regional Administrator, sampling and analysis of the waste and exhaust emissions must be conducted to verify that the operating requirements established in the permit achieve the performance standards of § 264.343.

(b) The incinerator and associated equipment (pumps, valves, conveyors, pipes, etc.) must be subjected to thorough visual inspection, at least daily, for leaks, spills, fugitive emissions, and signs of tampering.

(c) The emergency waste feed cutoff system and associated alarms must be tested at least weekly to verify operability, unless the applicant demonstrates to the Regional Administrator that weekly inspections will unduly restrict or upset operations and that less frequent inspection will be adequate. At a minimum, operational testing must be conducted at least monthly.

(d) This monitoring and inspection data must be recorded and the records must be placed in the operating log required by § 264.73.

(Approved by the Office of Management and Budget under control number 2050-0002)

[46 FR 7678, Jan 23, 1981, as amended at 47 FR 27533, June 24, 1982, 50 FR 4514, Jan. 31, 1985]

§§ 264.348—264.350 [Reserved]

§ 264.351 Closure.

At closure the owner or operator must remove all hazardous waste and hazardous waste residues (including, but not limited to, ash, scrubber waters, and scrubber sludges) from the incinerator site.

[*Comment.* At closure, as throughout the operating period, unless the owner or operator can demonstrate, in accordance with § 261.3(d) of this chapter, that the residue removed from the incinerator is not a hazardous waste, the owner or operator becomes a generator of hazardous waste and must manage it in accordance with applicable requirements of Parts 262-266 of this chapter.]

§§ 264.352—264.999 [Reserved]

APPENDIX I—RECORDKEEPING INSTRUCTIONS

The recordkeeping provisions of § 264.73 specify that an owner or operator must keep a written operating record at his facility. This appendix provides additional instructions for keeping *portions* of the operating record. See § 264.73(b) for additional recordkeeping requirements.

The following information must be recorded, as it becomes available, and maintained in the operating record until closure of the facility in the following manner:

Records of each hazardous waste received, treated, stored, or disposed of at the facility which include the following:

(1) A description by its common name and the EPA Hazardous Waste Number(s) from Part 261 of this Chapter which apply to the waste. The waste description also must include the waste's physical form, i.e., liquid, sludge, solid, or contained gas. If the waste is not listed in Part 261, Subpart D, of this Chapter, the description also must include the process that produced it (for example, solid filter cake from production of ——, EPA Hazardous Waste Number W051.)

Each hazardous waste listed in Part 261, Subpart D, of this Chapter, and each hazardous waste characteristic defined in Part 261, Subpart C, of this Chapter, has a four-digit EPA Hazardous Waste Number assigned to it. This number must be used for recordkeeping and reporting purposes. Where a hazardous waste contains more than one listed hazardous waste, or where more than one hazardous waste characteristic applies to the waste, the waste descrip-

WESTON

APPENDIX E

ANALYTICAL METHODS

- EPA Contract Laboratory Protocol for GC/MS Analysis of Purgeable Organics in Water, Soils, and Sediments
- EPA Protocol for the Analysis of Volatile Principle Organic Hazardous Constituents Using VOST
- National Institute for Occupational Safety and Health Method No. P & CAM 127
- Standard Method 209 G

WESTON

EPA CONTRACT LABORATORY PROTOCOL FOR GC/MS ANALYSIS PURGEABLE ORGANICS IN WATER, SOILS, AND SEDIMENTS

6060A

1. GC/MS Analysis of Purgeable Organics

1.1 Summary of Methods

1.1.1 Water samples

An inert gas is bubbled through a 5 mL sample contained in a specifically designed purging chamber at ambient temperature. The purgeables are efficiently transferred from the aqueous phase to the vapor phase. The vapor is swept through a sorbent column where the purgeables are trapped. After purging is completed, the sorbent column is heated and backflushed with the inert gas to desorb the purgeables onto a gas chromatographic column. The gas chromatograph is temperature programmed to separate the purgeables which are then detected with a mass spectrometer.

An aliquot of the sample is diluted with reagent water when dilution is necessary. A 5 mL aliquot of the dilution is taken for purging.

1.1.2 Sediment/Soil Samples

1.1.2.1 Low Level. An inert gas is bubbled through a mixture of a 5 gm sample and reagent water contained in a suggested specially designed purging chamber (illustrated on page D-95) at elevated temperatures. The purgeables are efficiently transferred from the aqueous phase to the vapor phase. The vapor is swept through a sorbent column where the purgeables are trapped. After purging is completed, the sorbent column is heated and backflushed with the inert gas to desorb the purgeables onto a gas chromatographic column. The gas chromatograph is temperature programmed to separate the purgeables which are then detected with a mass spectrometer.

1.1.2.2 Medium Level. A measured amount of soil is extracted with methanol. A portion of the methanol extract is diluted to 5 mL with reagent water. An inert gas is bubbled through this solution in a specifically designed purging chamber at ambient temperature. The purgeables are effectively transferred from the aqueous phase to the vapor phase. The vapor is swept through a sorbent column where the purbeables are trapped. After purging is completed, the sorbent column is heated and backflushed with the inert gas to desorb the purgeables onto a gas chromatographic column. The gas chromatograph is temperature programmed to separate the purgeables which are then detected with a mass spectrometer.

1.2 Interferences

1.2.1 Impurities in the purge gas, organic compounds out-gassing from the plumbing ahead of the trap, and solvent vapors in the laboratory account for the majority of contamination problems. The analytical system must be demonstrated to be free from contamination under the conditions of the analysis by running laboratory reagent blanks as described in Exhibit E. The use of non-TFE tubing, non-TFE thread sealants, or flow controllers with rubber components in the purging device should be avoided.

1.2.2 Samples can be contaminated by diffusion of volatile organics (particularly fluorocarbons and methylene chloride) through the septum seal into the sample during storage and handling. A holding blank prepared from reagent water and carried through the holding period and the analysis protocol serves as a check on such contamination. One holding blank per case must be analyzed.

1.2.3 Contamination by carry over can occur whenever high level and low level samples are sequentially analyzed. To reduce carry over, the purging device and sampling syringe must be rinsed with reagent water between sample analyses. Whenever an unusually concentrated sample is encountered, it should be followed by an analysis of reagent water to check for cross contamination. For samples containing large amounts of water-soluble materials, suspended solids, high boiling compounds or high purgeable levels, it may be necessary to wash out the purging device with a detergent solution, rinse it with distilled water, and then dry it in a 105°C oven between analyses. The trap and other parts of the system are also subject to contamination; therefore, frequent bakeout and purging of the entire system may be required.

1.3 Apparatus and Materials

1.3.1 Micro syringes - 25 uL and larger, 0.006 inch ID needle.

1.3.2 Syringe valve - two-way, with Luer ends (three each), if applicable to the purging device.

1.3.3 Syringe - 5 mL, gas tight with shut-off valve.

1.3.4 Balance-Analytical, capable of accurately weighing 0.0001 g. and a top-loading balance capable of weighing 0.1g.

1.3.5 Glassware

1.3.5.1
- Bottle - 15 mL, screw cap, with Teflon cap liner.
- Volumetric flasks - class A with ground-glass stoppers
- Vials - 2 mL for GC autosampler.

1.3.6 Purge and trap device - The purge and trap device consists of three separate pieces of equipment; the sample purger, trap and the desorber. Several complete devices are now commercially available.

1.3.6.1 The sample purger must be designed to accept 5 mL samples with a water column at least 3 cm deep. The gaseous head space between the water column and the trap must have a total volume of less than 15 mL. The purge gas must pass through the water column as finely divided bubbles with a diameter of less than 3 mm at the origin. The purge gas must be introduced no more than 5 mm from the base of the water column. The sample purger, illustrated in Figure 1, meets these design criteria. Alternate sample purge devices may be utilized provided equivalent performance is demonstrated.

1.3.6.2 The trap must be at least 25 cm long and have an inside diameter of at least 0.105 inch. The trap must be packed to contain the following minimum lengths of absorbents: 1.0 cm of methyl silicone coated packing (3% OV-1 on Chromosorb W or equivalent), 15 cm of 2,6-diphenylene oxide polymer (Tenax-GC 60/80 mesh) and 8 cm of silica gel (Davison Chemical, 35/60 mesh, grade 15, or equivalent). The minimum specifications for the trap are illustrated in Figure 2.

1.3.6.3 The desorber should be capable of rapidly heating the trap to 180°C. The polymer section of the trap should not be heated higher than 180°C and the remaining sections should not exceed 220°C. The desorber design, illustrated in Figure 2, meets these criteria.

1.3.6.4 The purge and trap device may be assembled as a separate unit or be coupled to a gas chromatograph as illustrated in Figures 3 and 4.

1.3.6.5 A heater or heated bath capable of maintaining the purge device at 40°C ± 1°C.

1.3.7 GC/MS system

1.3.7.1 Gas chromatograph - An analytical system complete with a temperature programmable gas chromatograph suitable for on-column injection and all required accessories including syringes, analytical columns, and gases.

1.3.7.2 Column - 6 ft long x 0.1 in ID glass, packed with 1% SP-1000 on Carbopack B (60/80 mesh) or equivalent.

1.3.7.3 Mass spectrometer - Capable of scanning from 35 to 260 amu every seven seconds or less, utilizing 70 volts (nominal) electron energy in the electron impact ionization mode and producing a mass spectrum which meets all the criteria in table 2 when 50 ng of 4-bromofluorobenzene (BFB) is injected through the gas chromatograph inlet.

1.3.7.4 GC/MS interface - Any gas chromatograph to mass spectrometer interface that gives acceptable calibration points at 50 ng or less per injection for each of the parameters of interest and achieves all acceptable performance criteria (Exhibit E) may be used. Gas chromatograph to mass spectrometer interfaces constructed of all-glass or glass-lined materials are recommended. Glass can be deactivated by silanizing with dichlorodimethylsilane.

1.3.7.5 Data system - A computer system must be interfaced to the mass spectrometer that allows the continuous acquisition and storage on machine readable media of all mass spectra obtained throughout the duration of the chromatographic program. The computer must have software that allows searching any GC/MS data file for ions of a specified mass and plotting such ion abundances versus time or scan number. This type of plot is defined as an Extracted Ion Current Profile (EICP). Software must also be available that allows integrating the abundance in any ECIP between specified time or scan number limits.

1.4 Reagents

1.4.1 Reagent water - Regent water is defined as water in which an interferent is not observed at the MDL of the parameters of interest.

1.4.1.1 Reagent water may be generated by passing tap water through a carbon filter bed containing about 453 g of activated carbon (Calgon Corp., Filtrasorb-300 or equivalent).

1.4.1.2 A water purification system (Millipore Super-Q or equivalent) may be used to generate reagent water.

1.4.1.3 Reagent water may also be prepared by boiling water for 15 minutes. Subsequently, while maintaining the temperature at 90°C, bubble a contaminant-free inert gas through the water for one hour. While still hot, transfer the water to a narrow-mouth screw-cap bottle and seal with a Teflon-lined septum and cap.

1.4.2 Sodium thiosulfate - (ACS) Granular.

1.4.3 Methanol - Pesticide quality or eqvuivalent.

1.4.4 Stock standard solutions - Stock standard solutions may be prepared from pure standard materials or purchased and must be traceable to EMLS/LV supplied standards. Prepare stock standard solutions in methanol using assayed liquids or gases as appropriate.

1.4.4.1 Place about 9.8 mL of methanol into a 10.0 mL tared ground glass stoppered volumetric flask. Allow the flask to stand, unstoppered, for about 10 minutes or until all alcohol wetted surfaces have dried. Weigh the flask to the nearest 0.1 mg.

1.4.4.2 Add the assayed reference material as described below.

1.4.4.2.1 Liquids - Using a 100 uL syringe, immediately add two or more drops of assayed reference material to the flask then reweigh. The liquid must fall directly into the alcohol without contacting the neck of the flask.

1.4.4.2.2 Gases - To prepare standards for any of the four halocarbons that boil below 30°C (bromomethane, chloroethane, chloromethane, and vinyl chloride), fill a 5 mL valved gas-tight syringe with the reference standard to the 5.0 mL mark. Lower the needle to 5 mm above the methanol meniscus. Slowly introduce the reference standard above the surface of the liquid. The heavy gas rapidly dissolves in the methanol.

1.4.4.3 Reweigh, dilute to volume, stopper, then mix by inverting the flask several times. Calculate the concentration in micrograms per microliter from the net gain in weight. When compound purity is assayed to be 96% or greater, the weight may be used without correction to calculate the concentration of the stock standards may be used at any concentration if they are certified by the manufacturer. Commercial standards must be traceable to EMSL/LV supplied standards.

1.4.4.4 Transfer the stock standard solution into a Teflon-sealed screw-cap bottle. Store, with minimal head-space at -10°C to -20°C and protect from light.

1.4.4.5 Prepare fresh standards weekly for the four gases and 2-chloroethyl-vinyl ether. All other standards must be replaced after one month, or sooner if comparison with check standards indicate a problem.

1.4.5 Secondary dilution standards - Using stock standard solutions, prepare secondary dilution standards in methanol that contain the compounds of interest, either singly or mixed together. (See GC/MS Calibration in Exhibit E). Secondary dilution standards should be stored with minimal headspace and should be checked frequently for signs of degradation or evaporation, especially just prior to preparing calibration standards from them.

1.4.6 Surrogate standard spiking solution. Prepare stock standard solutions for toluene-d8, p-bromofluorobenzene, and 1,2-dichloroethane-d4 in methanol as described in Paragraph 1.4.4. Prepare a surrogate standard spiking solution from these stock standards at a concentration of 250 ug/10 mL in methanol.

1.4.7 Purgeable Organic Matrix Standard Spiking Solution

1.4.7.1 Prepare a spiking solution in methanol that contains the following compounds at a concentration of 250 ug/10.0 mL:

Purgeable Organics

1,1-dichloroethene
trichloroethene
chlorobenzene
toluene
benzene

1.4.7.2 Matrix spikes also serve as duplicates; therfore, add an aliquot of this solution to each of two portions from one sample chosen for spiking.

1.4.8 BFB Standard - Prepare a 25 ng/uL solution of BFB in methanol.

1.4.9 Great care must be taken to maintain the integrity of all standard solutions. It is recommended that all standard solutions be stored at -10°C to -20°C in screw cap amber bottles with teflon liners.

1.5 Calibration

1.5.1 Assemble a purge and trap device that meets the specification in paragraph 1.3.6. Condition the trap overnight at 180°C in the purge mode with an inert gas flow of at least 20 mL/min. Prior to use, daily condition traps 10 minutes while back-flushing at 180°C with the column at 220°C.

1.5.2 Connect the purge and trap device to a gas chromatograph. The gas chromatograph must be operated using temperature and flow rate parameters equivalent to those in paragraph 1.7.1.2 Calibrate the purge and trap-GC/MS system using the internal standard technique (paragraph 1.5.3).

1.5.3 Internal standard calibration procedure. The three internal standards are bromochloromethane, 1,4-difluorobenzene, and chlorobenzene-d_5.

1.5.3.1 Prepare calibration standards at a minimum of five concentration levels for each HSL parameter. The concentration levels are specified in Exhibit E. Aqueous standards may be stored up to 24 hours, if held in sealed vials with zero headspace as described in paragraph 1.7. If not so stored, they must be discarded after an hour.

1.5.3.2 Prepare a spiking solution containing each of the internal standards using the procedures described in paragraphs 1.4.4 and 1.4.5. It is recommended that the secondary dilution standard be prepared at a concentration of 25 ug/mL of each internal standard compound. The addition of 10 uL of this standard to 5.0 mL of sample or calibration standard would be equivalent of 50 ug/L.

1.5.3.3 Analyze each calibration standard, according to paragraph 1.7 adding 10 uL of internal standard spiking solution directly to the syringe. Tabulate the area response of the characteristic ions against concentration for each compound and internal standard and calculate response factors (RF) for each compound using equation 1.

EQ. 1 $$RF = \frac{A_x}{A_{is}} \times \frac{C_{is}}{C_x}$$

Where:

A_x = Area of the characteristic ion for the compound to be measured.

A_{is} = Area of the characteristic ion for the specific internal standard from Exhibit E.

C_{is} = Concentration of the internal standard.

C_x = Concentration of the compound to be measured.

1.5.3.4 The average response factor (RF) must be calculated for all compounds. A system performance check must be made before this calibration curve is used. Five compounds (the system performance check compounds) are checked for a minimum average response factor. These compounds (the SPCC) are chloromethane, 1,1-dichloroethane, bromoform, 1,1,2,2-tetrachloroethane, and chlorobenzene. Five compounds (the calibration check compounds, CCC) are used to evaluate the curve. Calculate the % Relative Standard Deviation (%RSD) of RF values over the working range of the curve. A minimum %RSD for each CCC must be met before the curve is valid.

$$\%RSD = \frac{\text{Standard deviation}}{\text{mean}} \times 100$$

See instructions for Form VI, Initial Calibration Data for more details.

1.5.3.5 Check of the calibration curve should be performed once every 12 hours. These criteria are described in detail in the instructions for Form VII, Continuing Calibration Check. The minimum response factor for the system performance check compounds must be checked. If this criteria is met, the response factor of all

compounds are calculated and reported. A percent difference of the daily response factor (12 hour) compared to the average response factor from the initial curve is calculated. The maximum percent difference allowed for each compound flagged as 'CCC' in Form VII is checked. Only after both these criteria are met can sample analysis begin.

1.5.3.6 Internal standard responses and retention times in all samples must be evaluated immediately after or during data acquisition. If the retention time for any internal standard changes by more than 30 seconds from the latest daily (12 hour) calibration standard, the chromatographic system must be inspected for malfunctions and corrections made as required. If the extracted ion current profile (EICP) area for any internal standard changes by more than a factor of two (-50% to +100%), the mass spectrometric system must be inspected for malfunction and corrections made as appropriate. When corrections are made, re-analysis of samples analyzed while the system was malfunctioning is necessary. Retention time and EICP area records shall be maintained in appropriate form by the laboratory as a part of its internal quality control (Exhibit E).

1.6 GC/MS Operating Conditions

1.6.1 These performance tests require the following instrumental parameters:

Electron Energy:	70 Volts (nominal)
Mass Range:	35 - 260
Scan Time:	to give at least 5 scans per peak but not to exceed 7 seconds per scan.

→ Will be changed to Something like 10 scans/peak 2 seconds/scan. 5/84

1.7 Sample Analysis

1.7.1 Water Samples

1.7.1.1 All samples and standard solutions must be allowed to warm to ambient temperature before analysis.

1.7.1.2 Recommended operating conditions for the gas chromatograph - Column conditions: Carbopak B (60/80 mesh with 1% SP-1000 pakced in a 6 foot by 2 mm ID glass column with helium carrier gas at a flow rate of 30 mL/min. Column temperature is isothermal at 45°C for 3 minutes, then programmed at 8°C per minute to 220°C and held for 15 minutes.

1.7.1.3 After achieving the key ion abundance criteria, calibrate the system daily as described in Exhibit E.

1.7.1.4 Adjust the purge gas (helium) flow rate to 40 ± 3 mL/min. Variations from this flow rate may be necessary to achieve better purging and collection efficiencies for some compounds, particularly chloromethane and bromoform

1.7.1.5 Remove the plunger from a 5 mL syringe and attach a closed syringe valve. Open the sample or standard bottle which has been allowed to come to ambient temperature, and carefully pour the sample into the syringe barrel to just short of overflowing. Replace the syringe plunger and compress the sample. Open the syringe valve and vent any residual air while adjusting the sample volume to 5.0 mL. This process of taking an aliquot destroys the validity of the sample for future analysis so if there is only one VOA vial, the analyst should fill a second syringe at this time to protect against possible loss of sample integrity. This second sample is maintained only until such a time when the

analyst has determined that the first sample has been analyzed properly. Filling one 20 mL syringe would allow the use of only one syringe. If a second analysis is needed from the 20 mL syringe, it must be analyzed within 24 hours. Care must also be taken to prevent air from leaking into the syringe.

1.7.1.6 The purgeable organics screening procedure (Section III, paragraph 1.0), if used, will have shown the approximate concentrations of major sample components. If a dilution of the sample was indicated, this dilution shall be made just prior to GC/MS analysis of the sample.

1.7.1.6.1 The following procedure will allow for dilutions near the calculated dilution factor from the screening procedure:

- All dilutions are made in volumetric flasks (10 mL to 100 mL).
- Select the volumetric flask that will allow for the necessary dilution. Intermediate dilutions may be necessary for extremely large dilutions.
- Calculate the approximate volume of reagent water which will be added to the volumetric flask selected and add slightly less than this quantity of reagent water to the flask.
- Inject the proper aliquot from the syringe prepared in paragraph 1.7.1.5 into the volumetric flask. Aliquots of less than 1 mL increments are prohibited. Dilute the flask to the mark with reagent water. Cap the flask, invert, and shake three times.
- Fill a 5 mL syringe with the diluted sample as in paragraph 1.7.1.5.

- o If this is an intermediate dilution, use it and repeat above procedure to achieve larger dilutions.

1.7.1.7 Add 10.0 uL of the surrogate spiking solution (1.4.6) and 10.0 uL of the internal standard spiking solution (1.5.3.2) through the valve bore of the syringe, then close the valve. The surrogate and internal standards may be mixed and added as a single spiking solution. The addition of 10 uL of the surrogate spiking solution to 5mL of sample is equivalent to a concentration of 50 ug/L of each surrogate standard.

1.7.1.8 Attach the syringe-syringe valve assembly to the syringe valve on the purging device. Open the syringe valves and inject the sample into the purging chamber.

1.7.1.9 Close both valves and purge the sample for 12.0 ± 0.1 minutes at ambient temperature.

1.7.1.10 At the conclusion of the purge time, attach the trap to the chromatograph, adjust the device to the desorb mode, and begin the gas chromatographic temperature program. Concurrently, introduce the trapped materials to the gas chrommatographic column by rapidly heating the trap to 180°C while backflushing the trap with an inert gas between 20 and 60 mL/min for four minutes. If this rapid heating requirement cannot be met, the gas chromatographic column must be used as a secondary trap by cooling it to 30°C (or subambient, if problems persist) instead of the recommended initial temperature of 45°C.

1.7.1.11 While the trap is being desorbed into the gas chromatograph, empty the purging chamber. Wash the chamber with a minimum of two 5 mL flushes of reagent water to avoid carry-over of pollutant compounds.

1.7.1.12 After desorbing the sample for four minutes, recondition the trap by returning the purge and trap device to the purge mode. Wait 15 seconds then close the syringe valve on the purging device to begin gas flow through the trap. The trap temperature should be maintained at 180°C. Trap temperatures up to 230°C may be employed, however the higher temperature will shorten the useful life of the trap. After approximately seven minutes turn off the trap heater and open the syringe valve to stop the gas flow through the trap. When cool, the trap is ready for the next sample.

1.7.1.13 If the initial analysis of a sample or a dilution of a sample indicates saturated ions of HSL compounds, the sample must be reanalyzed at a higher dilution. When a sample is analyzed that has saturated ions from a compound, this analysis must be followed by a blank reagent water analysis. If the blank analysis is not free of interferences, the system must be decontaminated. Sample analysis may not resume until a blank can be analyzed that is free of interferences.

1.7.1.14 For low and medium level water samples, add 10 uL of the matrix spike solution (1.4.7) to the 5mL of sample purged. Disregarding any dilutions, this is equivalent to a concentration of 50 ug/L of each matrix spike standard.

1.7.1.15 All dilutions must keep the response of the major constituents (previously saturated peaks) in the upper half of the linear range of the curve.

1.7.2 <u>Sediment/Soil Samples</u>

Two approaches may be taken to determine whether the low level or medium level method may be followed.

- o Assume the sample is low level and analyze a 5 gram sample
- o Use the X factor calculated from the optional Hexadecane screen (Section III), paragraph 1.7.2.1.3

If any peaks are saturated from the analysis of a 5 gram sample, a smaller sample size must be analyzed to prevent saturation. However, the smallest sample size permitted is 1 gm. If smaller than 1 gram sample size is needed to prevent saturation, the medium level method must be used.

1.7.2.1 Low Level Method

The low level method is based on purging a heated sediment/soil sample mixed with reagent water containing the surrogate and internal standards.

Use 5 grams of sample or use the X Factor to determine the sample size for purging.

- o If the X Factor is 0 (no peaks noted on the hexadecane screen), analyze a 5 gm sample.
- o If the X Factor is between 0 and 1.0, analyze a 1 gm sample.

1.7.2.1.1 The GC/MS system should be set up as in 1.7.1.2 - 1.7.1.4. This should be done prior to the preparation of the sample to avoid loss of volatiles from standards and sample.

1.7.2.1.2 Remove the plunger from a 5 mL "Luerlock" type syringe equipped with a syringe valve and fill until overflowing with reagent water. Replace the plunger and compress the water to vent trapped air. Adjust the volume to 5.0 mL. Add 10 uL each of the surrogate spiking solution (1.4.6) and the internal standard solution to the syringe through the valve. (Surrogate spiking solution and internal standard solution may be mixed together). The addition of 10 uL of the surrogate spiking solution to 5 gm of sediment/ soil is equivalent to 50 ug/kg of each surrogate standard.

1.7.2.1.3 The sample (for volatile organics) consists of the entire contents of the sample container. Do not discard any supernatant liquids. Mix the contents of the sample container with a narrow metal spatula. Weigh the amount determined in 1.7.2.1 into a tared purge device. Use a top loading balance. Note and record the actual weight to the nearest 0.1 gm.

1.7.2.1.3.1 Immediately after weighing the sample weigh 5-10 g of the sediment into a tared crucible. Determine the percent moisture by drying overnight at 105°C. Allow to cool in a desiccator before weighing. Concentrations of individual analytes will be reported relative to the dry weight of sediment.

Percent moisture

$$\frac{\text{gm of sample} - \text{gm of dry sample}}{\text{gm of sample}} \times 100 = \%\ \text{moisture}$$

1.7.2.1.4 Add the spiked reagent water to the purge device and connect the device to the purge and trap system. NOTE: Steps 1.7.2.1.2 - 1.7.2.1.3, prior to the attachment of the purge device, must be performed rapidly to avoid loss of volatile organics. These steps must be performed in a laboratory free of solvent fumes.

1.7.2.1.5 Heat the sample to 40°C ± 1°C and purge the sample for 12 ± 0.1 minutes.

1.7.2.1.6 Proceed with the analysis as outlined in 1.7.1.10 - 1.7.1.13. Use 5 mL of the same reagent water as the reagent blank.

1.7.2.1.7 For low level sediment/soils add 10 uL of the matrix spike solution (1.4.7) to the 5 mL of water (1.7.2.1.2). The concentration for a 5 gram sample would be equivalent to 50 ug/kg of each matrix spike standard.

1.7.2.2 Medium Level Method

The medium level method is based on extracting the sediment/soil sample with methanol. An aliquot of the methanol extract is added to reagent water containing the surrogate and internal standards. This is purged at ambient temperature. All samples with an X Factor >1.0 should be analyzed by the medium level method. If saturated peaks occurred or would occur when a 1 gram sample was analyzed, the medium level method must be used.

1.7.2.2.1 The sample (for volatile organics) consists of the entire contents of the sample container. Do not discard any supernatent liquids. Mix the contents of the sample container with a narrow metal spatula. Weigh 4 gm (wet weight) into a tared 15 mL vial. Use a top loading balance. Note a nd record the actual weight to the nearest 0.1 gm. Determine the percent moisture as in 1.7.2.1.3.1.

1.7.2.2.2 Quickly add 9.0 mL of methanol, then 1.0 mL of the surrogate spiking solution to the vial. Cap and shake for 2 minutes. NOTE: Steps 1.7.2.2.1 and 1.7.2.2.2 must be performed rapidly to avoid loss of volatile organics. These steps must be performed in a laboratory free of solvent fumes.

1.7.2.2.3 Pipette for storage approximately 1 mL of extract to a GC vial using a disposable pipet. The remainder may be disposed of. Transfer approximately 1 mL of the reagent methanol to a GC vial for use as the method blank for each case or set of 20 samples, whichever is greater. These extracts may be stored in the dark at 4°C prior to analysis.

The addition of a 100 uL aliquot of each of these extracts in paragraph 1.7.2.2.6 will give a concentration equivalent to 6,200 ug/kg of each surrogate standard.

1.7.2.2.4 The GC/MS system should be set up as in 1.7.1.2 - 1.7.1.4. This should be done prior to the addition of the methanol extract to reagent water.

1.7.2.2.5 The following table can be used to determine the volume of methanol extract to add to the 5 mL of reagent water for analysis. If the Hexadecane screen procedure was followed use the X factor (Option B) or the estimated concentration (Option A) to determine the appropriate volume. Otherwise, estimate the concentration range of the sample from the low level analysis to determine the appropriate volume. If the sample was submitted as a medium level sample, start with 100 uL. All dilutions must keep the response of the major constituents (previously saturated peaks) in the upper half of linear range of the curve.

X Factor	Estimated Concentration Range[1/]	Take this Volume of Methanol Extract[2/]
	ug/kg	uL
0.25 - 5.0	500 - 10,000	100
0.5 - 10.0	1000 - 20,000	50
2.5 - 50.0	5000 - 100,000	10
12.5 - 250	25,000 - 500,000	100 of 1/50 dilution[3/]

Calculate appropriate dilution factor for concentrations exceeding the table.

1/ Actual concentration ranges could be 10 to 20 times higher than this if the compounds are halogenated and the estimates are from GC/FID.

2/ The volume of methanol added to the 5 mL of water being purged should be kept constant. Therefore, add to the 5 mL syringe whatever volume of methanol is necessary to maintain a volume of 100 uL added to the syringe.

3/ Dilute an aliquot of the methanol extract and then take 100 uL for analysis.

1.7.2.2.6 Remove the plunger from a 5 mL "Luerlock" type syringe equipped with a syringe valve and fill until overflowing with reagent water. Replace the plunger and compress the water to vent trapped air. Adjust the volume to 4.9 mL. Pull the plunger back to 5 mL to allow volume for the addition of sample and standards. Add 10 uL of the internal standard solution. Also add the volume of methanol extract determined in 1.7.2.2.5 and a volume of methanol solvent to total 100 uL (excluding methanol in standards).

1.7.2.2.7 Attach the syringe-syringe valve assembly to the syringe valve on the purging device. Open the syringe valve and inject the water/methanol sample into the purging chamber.

1.7.2.2.8 Proceed with the analysis as outlined in 1.7.1.9 - 1.7.1.13. Analyze all reagent blanks on the same instrument as the samples. The standards should also contain 100 uL of methanol to simulate the sample conditions.

1.7.2.2.9 For a matrix spike in the medium level sediment/soil samples, add 8.0 mL of methanol, 1.0 mL of surrogate spike solution (1.4.6), and 1.0 mL of matrix spike solution (1.4.7) in paragraph 1.7.2.2.2. This results in a 6,200 ug/kg concentration of each matrix spike standard when added to a 4 gm sample. Add a 100 uL aliquot of this extract to 5 mL of water for purging (as per paragraph 1.7.2.2.6).

1.8 Qualitative Analysis

1.8.1 The target compounds listed in the Hazardous Substances List (HSL), Exhibit C, shall be identified by an analyst competent in the interpretation of mass spectra (see Bidder Pre-Award Laboratory Evaluation Criteria) by comparison of the sample mass spectrum to the mass spectrum of a standard of the suspected compound. Two criteria must be satisfied to verify the identifications: (1) elution of the sample component at the same GC relative retention time as the standard component, and (2) correspondence of the sample component and standard component mass spectra.

1.8.1.1 For establishing correspondence of the GC relative retention time (RRT), the sample component RRT must compare within ± 0.06 RRT units of the RRT of the standard component. For reference, the standard must be run on the same shift as the sample. If coelution of interfering components prohibits accurate assignment of the sample component RRT from the total ion chromatogram, the RRT should be assigned by using extracted ion current profiles for ions unique to the component of interest.

1.8.1.2 For comparison of standard and sample component mass spectra, mass spectra obtained on the contractor's GC/MS are required. Once obtained, these standard spectra may be used for identification purposes, only if the contractor's GC/MS meets the daily turning requirements for BFB or DFTPP. These standard spectra may be obtained from the run used to obtain reference RRTs.

1.8.1.3 The requirements for qualitative verification by comparison of mass spectra are as follows:

(1) All ions present in the standard mass spectra at a relative intensity greater than 10 % (most abundant ion in the spectrum equals 100%) <u>must</u> be present in the sample spectrum.

(2) The relative intensities of ions specified in (1) must agree within plus or minus 20% between the standard and sample spectra. (Example: For an ion with an abundance of 50% in the standard spectra, the corresponding sample abundance must be between 30 and 70 percent).

(3) Ions greater than 10% in the sample spectrum but not present in the standard spectrum must be considered and accounted for by the analyst making the comparison. In Task III, the verification process should favor false negatives.

1.8.2 A library search shall be executed for Non-HSL sample components for the purpose of tentative identification. For this purpose, the most recent available version of the EPA/NIH Mass Spectral Library shall be used. Computer generated library search routines should not use normalization routines that would misrepresent the library or unknown spectra when compared to each other.

1.8.2.1 Up to 10 substances of greatest apparent concentration not listed in Exhibit C for the purgeable organic fraction shall be tentatively identified via a forward search of the EPA/NIH mass spectral library. (Substances with responses less than 10% of the internal standard are not required to be searched in this fashion). Only after visual comparison of sample spectra with the nearest library searches will the mass spectral interpretation specialist assign a tentative identification.

1.8.2.2 Guidelines for making tentative identification: (1) Relative intensities of major ions in the reference spectrum (ions greater than 10% of the most abundant ion) should be present in the sample spectrum.

(2) The relative intensities of the major ions should agree within ± 20%. (Example: For an ion with an abundance of 50 percent of the standard spectra, the corresponding sample ion abundance must be between 30 and 70 percent.)

(3) Molecular ions present in reference spectrum should be present in sample spectrum.

(4) Ions present in the sample spectrum but not in the reference spectrum should be reviewed for possible background contamination or presence of co-eluting compounds.

(5) Ions present in the reference spectrum but not in the sample spectrum should be reviewed for possible subtraction from the sample spectrum because of background contamination or co-eluting compounds. Data system library reduction programs can sometimes create these discrepancies.

1.8.2.3 If in the opinion of the mass spectral specialist, no valid tentative identification can be made, the compound should be reported as unknown. The mass spectral specialist should give additional classification of the unknown compound, if possible (i.e. unknown aromatic, unknown hydrocarbon, unknown acid type, unknown chlorinated compound). If probable molecular weights can be distinguished, include them.

1.9 Quantitative Analysis

1.9.1 HSL components identified shall be quantified by the internal standard method. The internal standard used shall be the one nearest the retention time to that of a given analyte. The

EICP area of the characteristic ions of analytes listed in Tables 2 and 3 are used. The response factor (RF) from the daily standard analysis is used to calculate the concentration in the sample. Use the response factor as determined in paragraph 1.5.3.3 and the following equations:

Water (low and medium level)

Concentration ug/L $= \frac{(A_x)(I_s)}{(A_{is})(RF)(V_o)}$

Where:

A_x = Area of the characteristic ion for the compound to be measured

A_{is} = Area of the characteristic ion for the specific internal standard from Exhibit E.

I_s = Amount of internal standard added in nanograms (ng)

V_o = Volume of water purged in milliliters (mL) (take into account any dilutions)

Sediment/Soil (medium level)

Concentration ug/kg $= \frac{(A_x)(I_s)(V_t)}{(A_{is})(RF)(V_i)(W_s)(D)}$

Sediment/Soil (low level)

Concentration ug/kg $= \frac{(A_x)(I_s)}{(A_{is})(RF)(W_s)(D)}$

(Dry weight basis)

Where:

A_x, I_s, A_{is} = same as for water, above

V_t = Volume of total extract (uL) (use 10,000 uL or a factor of this when dilutions are made)

V_i = Volume of extract added (uL) for purging

D = $\frac{100 - \%\ \text{moisture}}{100}$

W_s = Weight of sample extracted (gm) or purged

1.9.2 An estimated concentration for Non-HSL components tentatively identified shall be quantified by the internal standard method. For quantification, the nearest internal standard free of interfereces shall be used.

1.9.2.1 The formula for calculating concentrations is the same as in paragraph 1.9.1. Total area counts from the total ion chromatograms are to be used for both the compound to be measured and the internal standard. A response factor (RF) of one (1) is to be assumed. The value from this quantitation shall be qualified as estimated. This estimated concentration should be calculated for all tentatively identified compounds as well as those identified as unknowns.

1.9.2.2 Xylenes (o,m, & p - isomers) are to be reported as total Xylenes. Since o- and p-Xylene overlap, the Xylenes must be quantitated versus m-Xylene. The concentration of all Xylene isomers must be added together to give the total.

1.9.3 Calculate surrogate standard recovery on all samples, blanks and spikes. Determine if recovery is within limits and report on appropriate form.

1.9.3.1 Calculation for surrogate recovery.

$$\text{Percent Surrogate Recovery} = \frac{Q_d}{Q_a} \times 100\%$$

where: Q_d = quantity determined by analysis

Q_a = quantity added to sample

1.9.3.2 If recovery is not within limits, the following is required:

- o Check to be sure there are no errors in calculations, surrogate solutions and internal standards. Also, check instrument performance.
- o Recalculate the sample data if any of the above checks reveal a problem.
- o Reanalyze the sample if none of the above are a problem.
- o Report the data from both analyses along with the surrogate data from both.

Table 2

Characteristic Ions for Surrogate and Internal Standards for Volatile Organic Compounds

Compound	Primary Ion	Secondary Ion(s)
SURROGATE STANDARDS		
4-Bromofluorobenzene	95	174, 176
1,2-Dichloroethane d-4	65	102
Toluene d-8	98	70, 100
INTERNAL STANDARDS		
Bromochloromethane	128	49, 130, 51
1,4-Difluorobenzene	114	63, 88
Chlorobenzene d-5	117	82, 119

Table 3
Characteristic Ions for Volatile HSL Compounds

Parameter	Primary Ion*	Secondary Ion(s)
Chloromethane	50	52
Bromomethane	94	96
Vinyl chloride	62	64
Chloroethane	64	66
Methylene chloride	84	49, 51, 86
Acetone	43	58
Carbon disulfide	76	78
1,1-Dichloroethene	96	61, 98
1,1-Dichloroethane	63	65, 83, 85, 98, 100
trans-1,2-Dichloroethene	96	61, 98
Chloroform	83	85
1,2-Dichloroethane	62	64, 100, 98
2-Butanone	72	57
1,1,1-Trichloroethane	97	99, 117, 119
Carbon tetrachloride	117	119, 121
Vinyl acetate	43	86
Bromodichloromethane	83	85, 129
1,1,2,2-Tetrachloroethane	83	85, 131, 133, 166
1,2-Dichloropropane	63	65, 114
trans-1,3-Dichloropropene	75	77
Trichloroethene	130	95, 97, 132
Dibromochloromethane	129	208, 206
1,1,2-Trichloroethane	97	83, 85, 99, 132, 134
Benzene	78	-
cis-1,3-Dichloropropene	75	77
2-Chloroethyl vinyl ether	63	65, 106
Bromoform	173	171, 175, 250, 252, 254, 256
2-Hexanone	43	58, 57, 100
4-Methyl-2-pentanone	43	58, 100
Tetrachloroethene	164	129, 131, 166
Toluene	92	91
Chlorobenzene	112	114
Ethyl benzene	106	91
Styrene	104	78, 103
Total xylenes	106	91

* The primary ion should be used unless interferences are present, in which case, a secondary ion may be used.

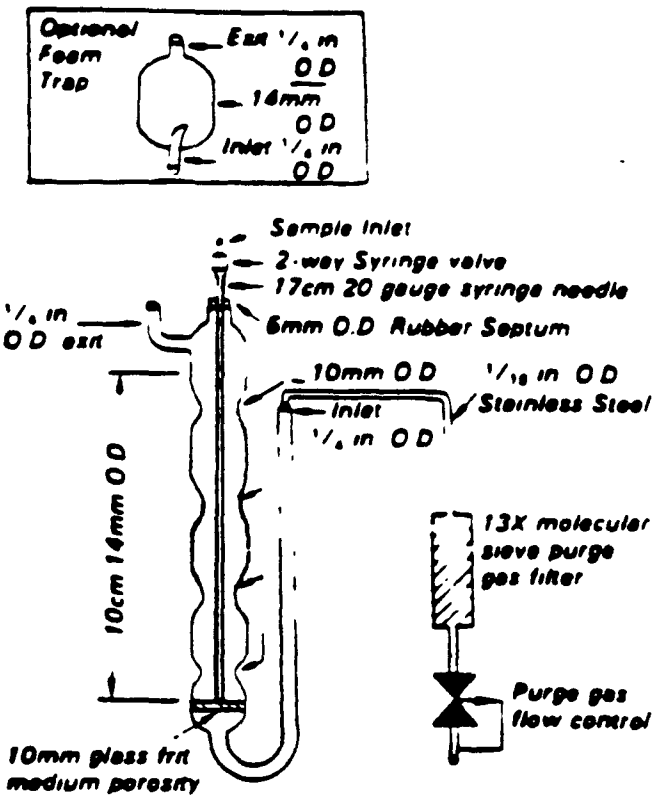

Figure 1. Purging device

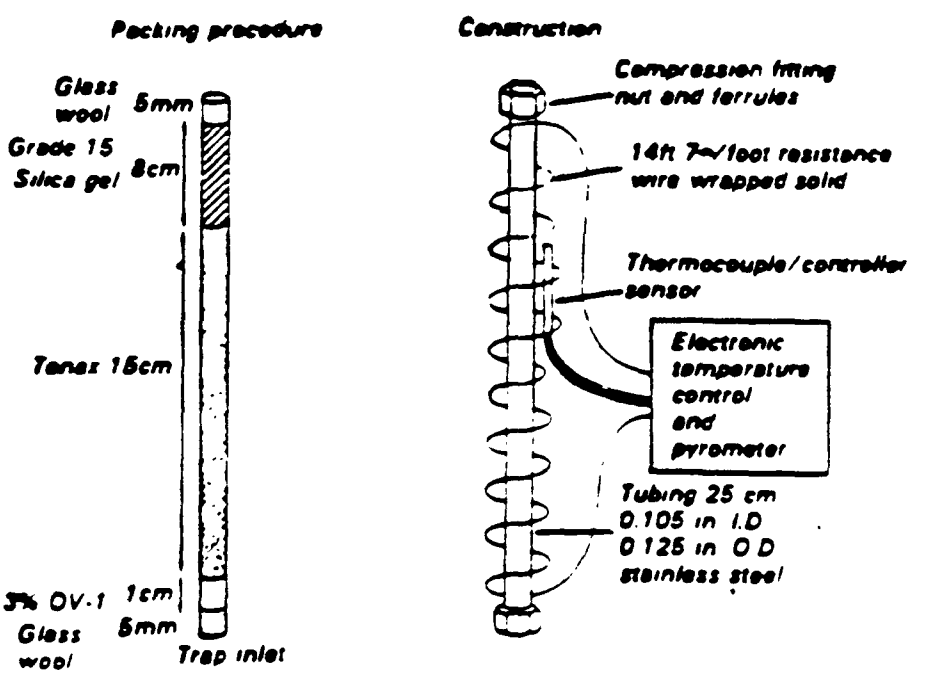

Figure 2 Trap packings and construction to include desorb capability

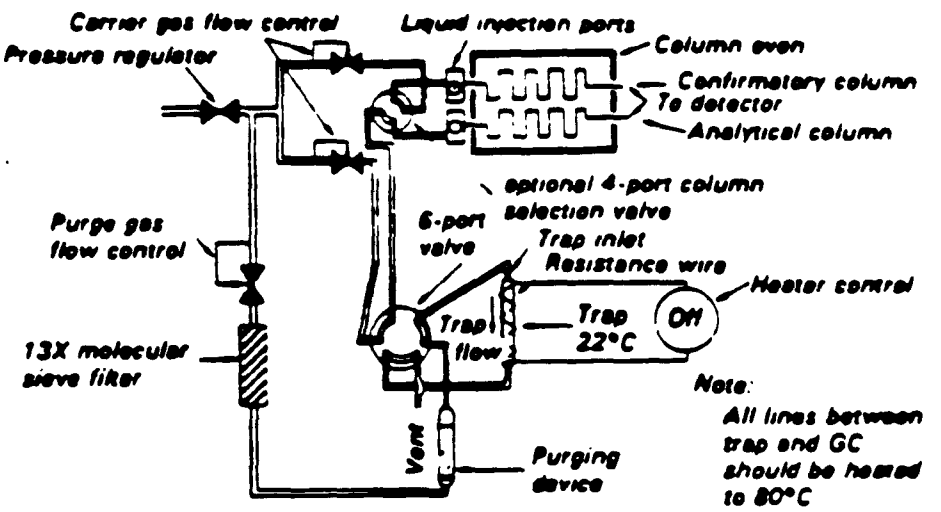

Figure 3 Schematic of purge and trap device — purge mode

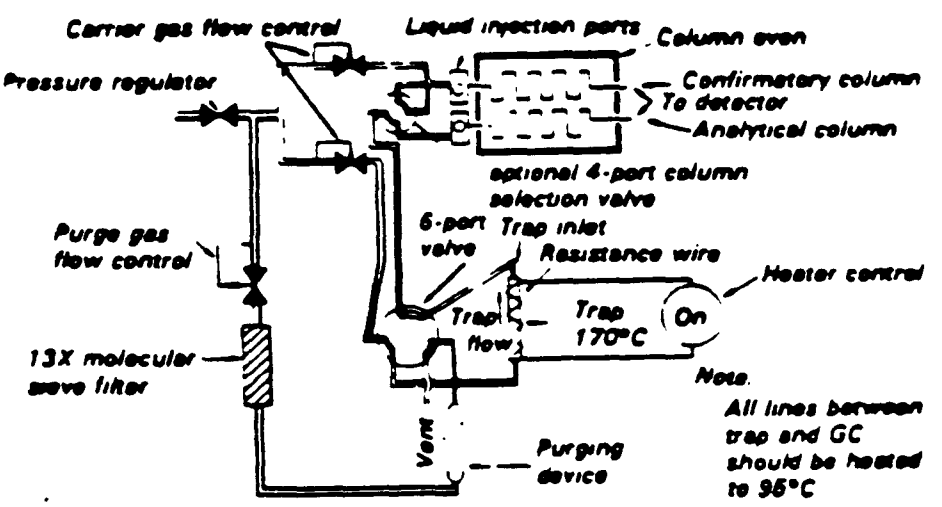

Figure 4. Schematic of purge and trap device — desorb mode

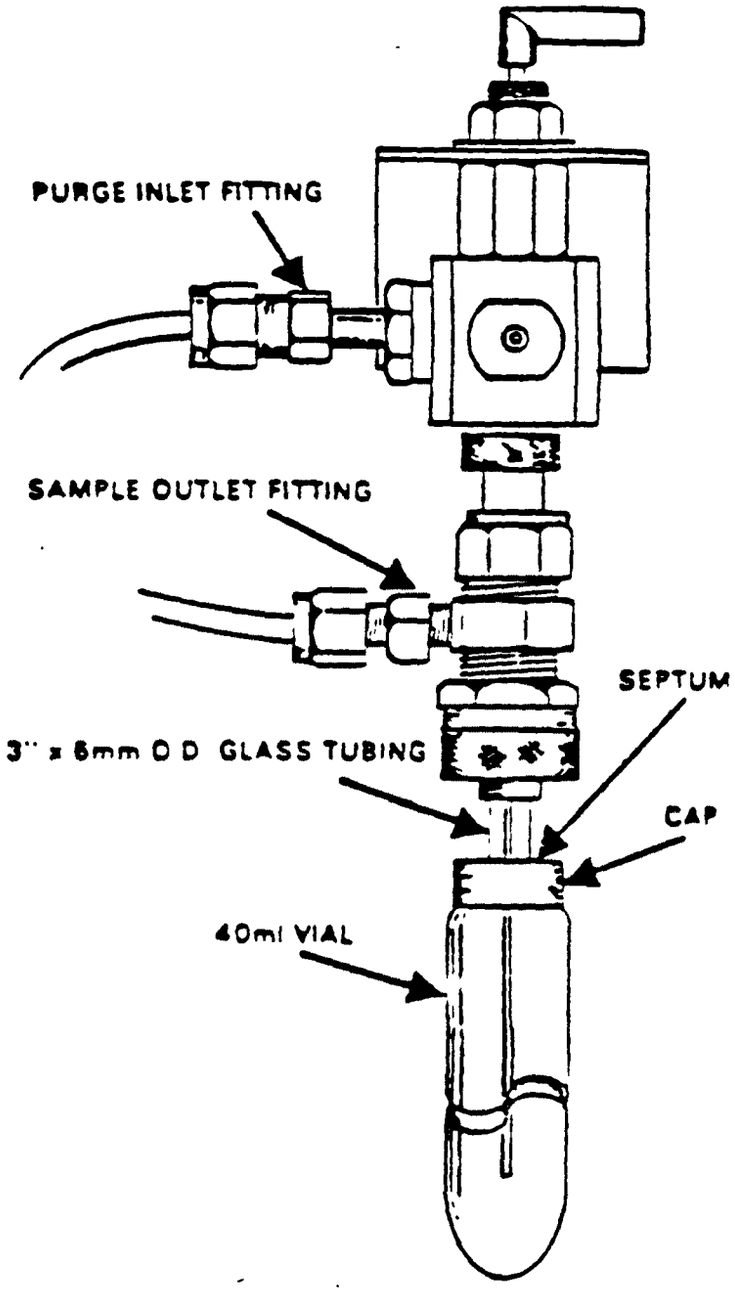

Figure 5. Low Soils Impinger

2. GC/MS Analysis of Extractables (Base/Neutrals and Acids)

2.1 Summary of Method

This method is to be used for the GC/MS analysis of extractable extracts screened by Section III protocols and for confirmation of pesticides/PCBs identified by GC/EC, if concentrations permit.

2.2 Apparatus and Materials

2.2.1 Gas chromatograph/mass spectrometer system.

2.2.1.1 Gas chromatograph - An analytical system complete with a temperature programmable gas chromatograph suitable for splitless injection and all required accessories including syringes, analytical columns, and gases.

2.2.1.2 Column - 30 m x 0.25 mm ID (or 0.32 mm) bonded-phase silicone coated fused silica capillary column (J&W Scientific DB-5 or equivalent). A film thickness of 1.0 micron is recommended because of its larger capacity. A film thickness of 0.25 micron may be used.

2.2.1.3 Mass Spectrometer - Capable of scanning from 35 to 500 amu every 1 second or less, utilizing 70 volts (nominal) electron energy in th electron impact ionization mode and producing a mass spectrum which meets all required criteria when 50 ng of decafluorotriphenylphosphine (DFTPP) is injected through the GC inlet.

NOTE: DFTPP criteria must be met before any sample extracts are analyzed. Any samples analyzed when DFTPP criteria have not been met will require reanalysis at no cost to the Government.

WESTON

EPA PROTOCOL FOR THE ANALYSIS OF VOLATILE PRINCIPLE ORGANIC HAZARDOUS CONSTITUENTS USING VOST

6060A

United States
Environmental Protection
Agency

EPA-600/8-84-007

March 1984

EPA

Research and Development

PROTOCOL FOR THE
COLLECTION AND ANALYSIS OF
VOLATILE POHCs USING VOST

Prepared for

Office of Solid Waste and Emergency Response

Prepared by

Industrial Environmental Research
Laboratory
Research Triangle Park NC 27711

RESEARCH REPORTING SERIES

Research reports of the Office of Research and Development, U.S. Environmental Protection Agency, have been grouped into nine series. These nine broad categories were established to facilitate further development and application of environmental technology. Elimination of traditional grouping was consciously planned to foster technology transfer and a maximum interface in related fields. The nine series are:

1. Environmental Health Effects Research
2. Environmental Protection Technology
3. Ecological Research
4. Environmental Monitoring
5. Socioeconomic Environmental Studies
6. Scientific and Technical Assessment Reports (STAR)
7. Interagency Energy-Environment Research and Development
8. "Special" Reports
9. Miscellaneous Reports

This report has been assigned to the SPECIAL REPORTS series. This series is reserved for reports which are intended to meet the technical information needs of specifically targeted user groups. Reports in this series include Problem Oriented Reports, Research Application Reports, and Executive Summary Documents. Typical of these reports include state-of-the-art analyses, technology assessments, reports on the results of major research and development efforts, design manuals, and user manuals.

EPA REVIEW NOTICE

This report has been reviewed by the U.S. Environmental Protection Agency, and approved for publication. Approval does not signify that the contents necessarily reflect the views and policy of the Agency, nor does mention of trade names or commercial products constitute endorsement or recommendation for use.

This document is available to the public through the National Technical Information Service, Springfield, Virginia 22161

EPA-600/8-84-007
March 1984

PROTOCOL FOR THE COLLECTION AND ANALYSIS OF VOLATILE POHCs USING VOST

By

Earl M. Hansen

Envirodyne Engineers, Inc.
12161 Lackland Road
St. Louis, Missouri 63146

EPA Contract No. 68-02-3697
Technical Directive 003

EPA Project Officer: Robin M. Anderson
Technical Support Office
U. S. Environmental Protection Agency
Industrial Environmental Research Laboratory
Research Triangle Park, NC 27711

Prepared For

Office of Research and Development
U.S. Environmental Protection Agency
Washington, DC 20460

FOREWORD

This report has been produced by EPA's Office of Research and Development as part of ongoing studies in support of engineering research and regulatory programs including EPA's Office of Solid Waste, EPA Regional Offices, and appropriate State Agencies. The document contains state-of-the-art operating protocols for sampling and analysis of volatile organic constituents of flue gases from hazardous waste incinerators or other similar combustor systems. It is intended as a reference to be used for guidance by personnel of the regulatory groups, personnel associated with engineering R&D, and the regulated community.

Publication of this report does not constitute official designation as an EPA method. Official test methods for hazardous waste related programs are published in SW-846 "Tests Methods for Evaluating Solid Waste," as well as in the Federal Register.

Frank T. Princiotta
Director
Industrial Environmental Research Laboratory

CONTENTS

		Page
Foreword		ii
Figures		v
Acknowledgements		vi
Introduction		vii
Abstract		viii
PART A:	SAMPLE COLLECTION FOR THE DETERMINATION OF EMISSIONS OF VOLATILE ORGANIC COMPOUNDS FROM HAZARDOUS WASTE INCINERATORS	A-1
1.	Scope of Applicability	A-1
2.	Summary of Method	A-3
3.	Precision and Accuracy	A-5
4.	Interferences	A-6
5.	Apparatus	A-7
5.1	Volatile Organic Sampling Train	A-7
5.2	Probe	A-7
5.3	Isolation Valve	A-10
5.4	Condensers	A-10
5.5	Sorbent Cartrides	A-10
5.6	Impinger	A-15
5.7	Metering Systems	A-15
5.8	Sample Transfer Lines	A-16
6.	Reagents and Materials	A-16
6.1	2,6-Diphenyline Oxide Polymer Tenax (35/60 Mesh)	A-16
6.2	Charcoal (SKC Lot 104 Petroleum Base or equivalent)	A-17
6.3	Viton O-Ring	A-18
6.4	Glass Tubes/Condensers	A-18
6.5	Metal Parts	A-18
6.6	Silica Gel	A-18
6.7	Crushed Ice	A-19
6.8	Water	A-19
6.9	Glass Wool	A-19
6.10	Nitrogen	A-19
7.	Assembly and Conditioning of VOST Sorbent Cartridges	A-19
7.1	Introduction	A-19
7.2	Assembly of Tenax Cartridges	A-20
7.3	Assembly of Tenax/Charcoal Cartridges	A-21
7.4	Sorbent Cartridge Quality Assurance	A-22
8.	Sample Collection Procedure	A-23
8.1	Pretest Preparation	A-23
8.2	VOST Assembly	A-24
8.3	Leak Checking	A-24
8.4	Sample Collection	A-26
8.5	Field, Trip, and Laboratory Blanks/Aqueous Field Blank	A-28

CONTENTS
(Continued)

		Page
PART B:	PROTOCOL FOR ANALYSIS OF SORBENT CARTRIDGES FROM VOLATILE ORGANIC SAMPLING TRAIN	B-1
1.	Scope and Applicability	B-1
2.	Summary of Method	B-2
3.	Precision and Accuracy	B-4
4.	Apparatus	B-4
4.1	Thermal Desorption Unit	B-4
4.2	Purge and Trap Unit	B-5
4.3	GC/MS System	B-5
5.	Reagents	B-6
5.1	Reagent Water	B-6
5.2	Analytical Trap Reagents	B-7
5.3	Stock Standard Solution	B-8
5.4	Secondary Dilution Standards	B-8
5.5	Bromofluorobenzene (BFB) Standard	B-8
5.6	Deuterated (d_6) Benzene Standard	B-8
6.	Calibration	B-9
6.1	Assembly of P-T-D Device	B-9
6.2	Internal Standard Calibration Procedure	B-9
7.	Quality Control	B-12
8.	Sample Collection, Preservation, and Handling	B-15
9.	Daily GC/MS Performance Tests	B-15
10.	Sample Desorption and Gas Chromatography	B-16
11.	Aqueous Condensate	B-17
12.	Qualitative Identification	B-17
13.	Calculations	B-18
14.	Method Performance	B-21
REFERENCES (For A and B)		B-22

FIGURES

No.		Page
1	Schematic of Volatile Organic Sampling Train	A-8
2	Volatile Organic Sampling Train (I/O Cartridge Design)	A-9
3	I/O Sorbent Trap Assembly, Volatile Organic Sampling Train (VOST)	A-12
4	Inside/Inside VOST Cartridge	A-13
5	VOST Field Data Sheet	A-25
6	Schematic Diagram of Trap Desorption/ Analysis System	B-3

ACKNOWLEDGEMENT

The author wishes to acknowledge the assistance and technical input of several people whose efforts led to the successful completion of this document.

The following people provided valuable comments and recommendations of the draft version of this protocol: Bob DeRosier of Accurex Corporation, Paul Gorman of Midwest Research Institute, Marvin R. Branscome and Charles Sparacino of Research Triangle Institute, Denny Wagoner and Alston Sykes of TRW, and Afaf K. Wensky of Battelle Columbus Laboratories. I would also like to recognize the development work conducted by TRW which provided valuable data for quality assurance monitoring of VOST sorbent cartridges. I am especially grateful for the guidance and constructive criticism received from Larry Johnson and Robin Anderson of the Technical Support Office, USEPA-IERL, Research Triangle Park, NC.

INTRODUCTION

The Resource Conservation and Recovery Act (RCRA) requires that owners/operators of facilities which treat hazardous waste by incineration ensure that the incinerators are operated in a manner which does not endanger human health or the environment (1,2). The Code of Federal Regulation, Title 40, Part 264, requires that a destruction and removal efficiency (DRE) of 99.99 percent be achieved for each principal organic hazardous constituent (POHC) designated in the Trial Burn Permit (3). The DRE standard implicitly requires sampling and analysis to quantify POHCs in the waste feed material and stack gas effluent. The "Sampling and Analysis Methods for Hazardous Waste Combustion" manual (method manual) provides information on methods that are applicable for collection and analyses of POHCs in process streams of hazardous waste incinerator units (4).

The methods manual identifies three possible methods for the collection of volatile organics (those with boiling points <100°C). The methods include bag, glass bulb, and the Volatile Organic Sampling Train (VOST). Evaluation of the bags and bulbs indicates that these sampling systems are subject to a number of technical problems. The most important of these problems is the inadequate sensitivity for detection of POHCs present in low concentrations.

The VOST provides increased sensitivity to low level concentration of volatile POHCs due to the ability to concentrate the gaseous effluent. The results of laboratory evaluation and field application of the VOST have shown that it provides sufficient sensitivity to permit calculation of a DRE equal to or greater than 99.99 percent for volatile POHCs which are present in the waste feed at 100 µg/g (5).

The methods manual identifies the VOST as a suitable sampling system for volatile organics and includes a paper describing the VOST (5). A detailed protocol was not included in the methods manual due to the fact that this is outside the scope of the document. Since the VOST is new technology, it is felt a protocol should be made available.

The purpose of this protocol is to provide a standard operating procedure to users of the VOST in the collection and analysis of samples for volatile POHCs in the gaseous effluents of hazardous waste incinerators or gaseous effluents of hazardous waste co-fired combustion processes. The protocol is presented in two parts. Part A describes the key components of the VOST train, and the procedure for sample collection using VOST. Part B describes the procedures for analysis of VOST sorbent cartridges for volatile POHCs using purge-trap-desorb gas chromatography/mass spectrometry (P-T-D GC/MS).

ABSTRACT

This document provides a state-of-the-art operating protocol for sampling and analysis of volatile organic constituents of flue gas from hazardous waste incinerators or other similar combustion systems using the Volatile Organic Sampling Train (VOST). It is intended to be used for guidance by personnel of the regulatory groups, personnel associated with engineering Research and Development, an dthe regulated community.

The VOST is designed to extract and concentrate volatile organic compounds (boiling ≤100°C) from stack gas effluents. The concentrated organics are analyzed by procedures chosen to be compatible with the VOST in order to obtain flue gas concentration levels. This information is necessary to perform destruction and removal efficiency (DRE) calculations for incinerator operations. The results of laboratory evaluation and field use of the VOST have shown that the VOST provides sufficient sensitivity to permit calculation of a DRE equal to or greater than 99.99 percent for volatile organics present in the waste feed at 100 µg/g.

The VOST is directly applicable to organic compounds with boiling points of 30° to 100°C. Many organic compounds with boiling points less than 30°C, or with boiling points in the 100° to 150°C range, may also be collected and analyzed by this method. Field application of the VOST for compounds with boiling points outside the 30° to 100°C range should be attempted only after laboratory evaluation of the collection and recovery efficiencies of the specific compounds.

The document is presented in two parts. Part A describes the key components of the train, the procedures for preparation of the sorbent materials, and procedures for sample collection using the VOST. Part B describes the procedures for analysis of VOST sorbent cartridges for volatile principal organic hazardous constituents (POHCs) using purge-trap-desorb gas chromatography/mass spectrometry (P-T-D GC/MS). Quality control procedures are presented in both Sections A and B.

PART A

SAMPLE COLLECTION FOR THE DETERMINATION OF THE EMISSIONS OF VOLATILE ORGANIC COMPOUNDS FROM HAZARDOUS WASTE INCINERATORS

1. SCOPE AND APPLICABILITY

1.1 This protocol describes the method of collection of volatile principal organic hazardous constituents (POHCs) from the stack gas effluents of hazardous waste incinerators. This method is applicable to compounds with boiling points in the range of 30° to 100°C. If the boiling point of a POHC of interest is less than 30°C, the POHC may breakthrough the sorbent under the conditions of the sample collection procedure. Field application for POHCs of this type should be supported by laboratory data which demonstrates the efficiency of a volatile organic sampling train (VOST) to collect POHCs with boiling points less than 30°C (Part B, Section 7). The collection of organic compounds with low boiling points may require using reduced sample volumes collected at flow rates between 250 and 500 milliliters per minute (ml/min). Many compounds which boil in the range of 100° to 150°C (e.g., chlorobenzene, ethylbenzene, tetrachloroethane, bromoform) may be efficiently collected and analyzed using this method. VOST recovery efficiencies for these compounds should also be demonstrated, where necessary, by laboratory data of the type described above (Part B, Section 7).

1.2 This method is applicable to the determination of volatile POHCs in the stack gas effluent of hazardous waste incinerators and other similar combustion systems. This method is designed for use in calculating the destruction and removal efficiency (DRE) for the volatile POHCs. The method provides sufficient precision and accuracy to enable the calculation of DRE values equal to or greater than 99.99 percent (5).

1.3 The sensitivity of this method is dependent upon the level of interferences in the sample and the presence of detectable levels of volatile POHCs in blanks. The target detection limit of this method is 0.1 micrograms per cubic meter ($\mu g/m^3$) [0.1 nanograms per liter (ng/l)] of flue gas which permit calculation of a DRE equal to or greater than 99.99 percent for those volatile POHCs which may be present in the waste feed stream at 100 parts per million (ppm). Laboratory development data (5) have demonstrated a range of 0.1 to 100 $\mu g/m^3$ (0.1 to 100 ng/l) for selected volatile POHCs.

1.4 The range of applicability for this method is limited by breakthrough of volatile POHCs on the sorbent cartridges used to collect the sample, caution should be exercised in using the VOST to collect samples from a stack gas stream in which one or more of the volatile POHCs are present in concentrations greater than 500 $\mu g/m^3$ (500 ng/l). If, for example, an incinerator uses a waste fuel containing volatile POHCs at a concentration of 50,000 to 100,000 $\mu g/g$, and the incinerator achieves a DRE of 99.99%, then

the concentration in the effluent would be 500 to 1000 µg/m^3 (500 to 1,000 ng/l), respectively. Analysis using the procedures described in Part B of this method would probably result in overloading the analytical instrumentation and therefore would not provide valid data for that particular POHC. Where the waste contains volatile POHCs at high concentrations, consideration should be given to collecting gaseous effluent samples using SLOW-VOST techniques, gas bags or evacuated glass bulbs. Further, if the waste contains volatile POHCs at high (50,000 µg/g) and low (100 µg/g) concentrations, these POHCs might not be quantifiable using only VOST. In this case, consideration should be given to either collecting gaseous effluent samples using two VOST trains (one of these trains should be operated under conditions of SLOW-VOST), or using one VOST train (SLOW-VOST) and gas bags or glass bulbs. The examples cited above may result in chromatographic interferences or instrument overloading which will invalidate the results. If this situation is anticipated, laboratory evaluation should be conducted prior to field use of the VOST (Part B, Section 7).

1.5 This method is recommended for use only by experienced sampling personnel and analytical chemists, or under close supervision by such qualified persons.

2. SUMMARY OF METHOD

2.1 A 2-hour sample of gaseous effluent is collected on cartridges using six pairs of cartridges, each pair sampling a maximum of 20 liters of gaseous effluent. The samples are collected

at a sampling flow rate of 1 liter per minute, using temperature controlled quartz or glass lined probe and a VOST. The gas stream is cooled to 20°C by passage through a water-cooled condenser and volatile POHCs are collected on a pair of sorbent cartridges. Liquid condensate is collected in an impinger placed between the two sorbent cartridges. The first sorbent cartridge (front cartridge) contains approximately 1.6 grams Tenax, and the second cartridge (back cartridge) contains approximately 1 gram each of Tenax and petroleum based charcoal (SKC Lot 104 petroleum base or equivalent, see Section 6.2.1), 3:1 by volume.

2.2 An alternative set of conditions for sample collection has been used. This method involves collecting a sample volume of 20 liters or less at a reduced flow rate. Operation of the VOST under these conditions has been referred to as SLOW-VOST. This method has been used to collect 5 liters of sample (0.25 liters/min for 20 minutes) or 20 liters of sample (0.5 liters/min for 40 minutes) on each pair of sorbent cartridges. Smaller sample volumes collected at lower flow rates should be considered when the boiling points of the POHCs of interest are below 30°C or for volatile POHCs present in high concentrations in the stack gas.

2.3 The gaseous effluent shall be sampled over a 2-hour period. This is accomplished using six pairs of Tenax and Tenax/charcoal cartridges sampling a maximum of 20 liters of gaseous effluent on each pair of cartridges. Fewer pairs of cartridges may be

required using SLOW-VOST (Section 2.2). A minimum of three pairs of Tenax and Tenax/charcoal cartridges shall be collected for SLOW-VOST sampling.

2.4 Analysis of the cartridges (described in Part B) for volatile POHCs using purge-trap-desorb gas chromatograph/mass spectrometer (P-T-D GC/MS) which is carried out by thermally desorbing each cartridge with the gas passing through a water filled purge column onto an analytical trap. The analytical trap is subsequently heated and the effluent gas passes into the GC/MS.

3. PRECISION AND ACCURACY

3.1 The results of laboratory evaluations of the VOST for selected volatile POHCs showed that the recovery of the analytes from three pairs of replicate cartridges ranged from ±50 percent of the expected value (5).

3.2 Prior to field operation of the VOST at a hazardous waste incinerator, a laboratory trial should be conducted using either selected volatile POHCs of interest or two or more of the volatile POHCs for which data are available (5). The user shall demonstrate proficiency which is within the precision and accuracy of the method (Part B, Section 7). Experienced users of VOST who have demonstrated proficiency with the VOST and can provide data which supports the applicability of the VOST for the POHCs may be exempt from this requirement. Before the VOST shall be used to

sample compounds below 30°C, the user must demonstrate through laboratory evaluations of the collection and recovery efficiencies that the accuracy and precision requirements are met (Part B, Section 7).

4. INTERFERENCES

4.1 Interferences arise primarily from background contamination of sorbent cartridges prior to or after use in sample collection. Many potential interferences can be due to exposure of the sorbent materials to solvent vapors prior to assembly and exposure to significant concentrations of volatile POHCs in the ambient air at hazardous waste incinerator sites. Benzene and toluene appear to be inherent contaminants on Tenax. This may present problems in the analysis of these compounds using VOST due to high background concentrations. To minimize this problem, the use of additional field blanks is recommended (see Section 8.5).

4.2 To avoid or minimize the low level contamination of train components with volatile POHCs, care should be taken to avoid contact of all interior surfaces or train components with synthetic organic materials (e.g. organic solvents, lubricating and sealing greases), and train components should be carefully cleaned and conditioned according to the procedures described in Sections 5, 6 and 7 of this protocol. The sorbent cartridges should be conditioned and stored in an environment free of volatile organic compounds.

5. APPARATUS

5.1 Volatile Organic Sampling Train

5.1.1 A schematic diagram of the principal components of the VOST is shown in Figure 1. A diagram of the assembled components of one version of the VOST is shown in Figure 2. The VOST consists of: a quartz or glass lined probe with a glass wool particulate plug, an isolation valve, a water cooled glass condenser with thermocouple placed at the outlet to monitor gas stream temperature (see Section 5.6.2), a sorbent cartridge containing Tenax (1.6 grams), an empty impinger for condensate removal, a second water cooled glass condenser, a second sorbent cartridge containing Tenax and petroleum based charcoal (3:1 by volume; approximately 1 gram of each), a silica gel drying tube, a calibrated rotameter, a sampling pump, and a dry gas meter.

5.1.2 The gas pressure during sampling and for leak checking is monitored by vacuum gauges which are in line with and downstream of the silica gel drying tube.

5.2 Probe

5.2.1 The probe shall be maintained at a temperature of at least 130°C in the gas stream prior to the first condenser. If one or more of the volatile POHCs boil between 130° to 150°C, the probe shall be maintained at a temperature equivalent to the boiling point of the least volatile POHC. The probe may require heating to achieve this temperature. If stack temperatures are excessively high, an air or water cooled probe may be required to

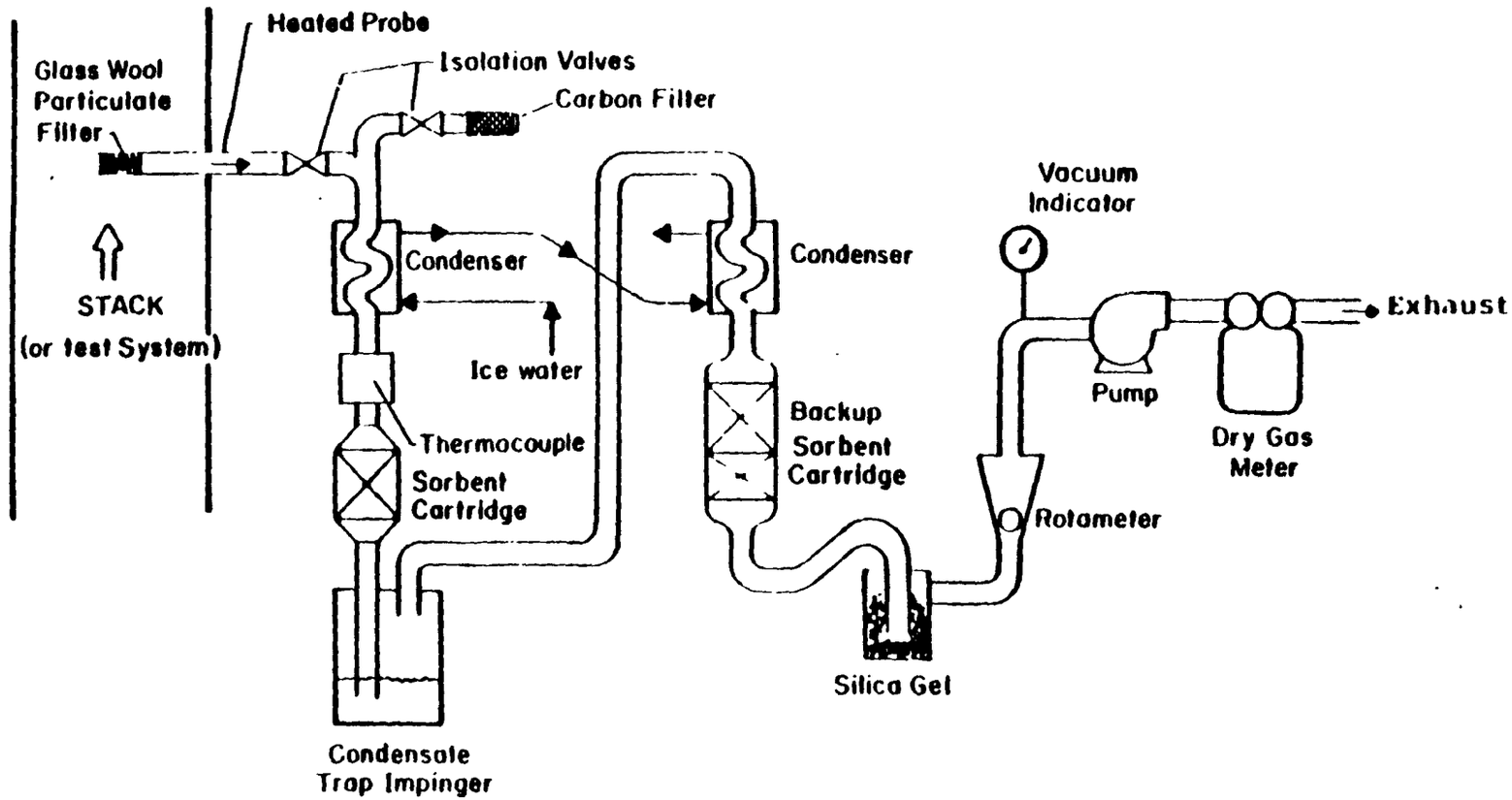

FIGURE 1
SCHEMATIC OF
VOLATILE ORGANIC SAMPLING TRAIN
(VOST)

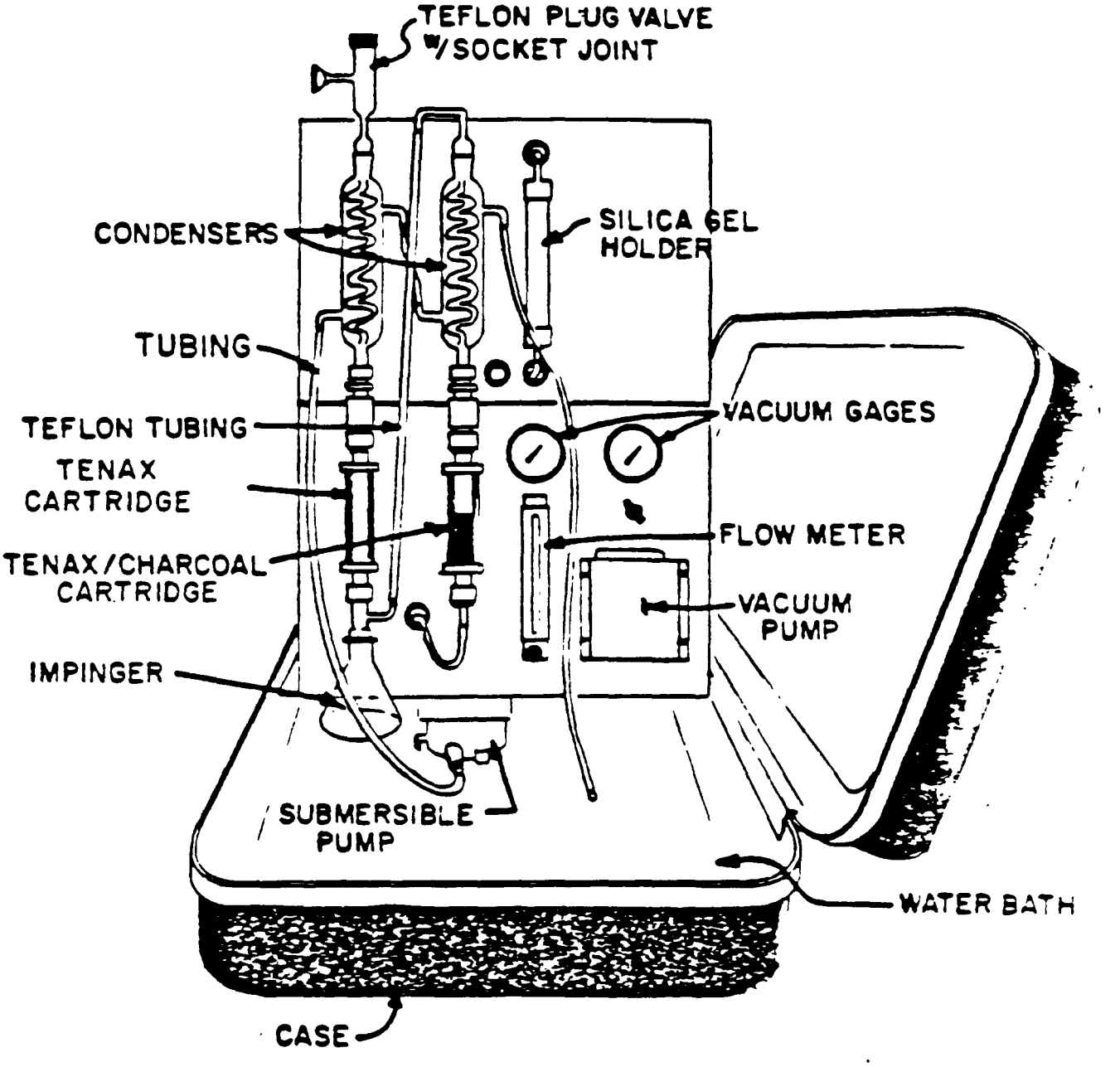

FIGURE 2

VOLATILE ORGANIC SAMPLING TRAIN
(I/O CARTRIDGE DESIGN)

avoid damage to the probe and to achieve a temperature of 20°C at inlet to first sorbent cartridge (see Section 5.4). Isokinetic sample collection is not a requirement for the use of VOST since the compounds of interest are in the vapor phase at the point of sample collection.

5.3 Isolation Valve

5.3.1 The isolation valves must be a greaseless stopcock with a glass bore and sliding Teflon plug with Teflon wipers (Ace 8193 or equivalent). These valves are used to permit ambient air to be admitted after leak checking (Section 8.3) and for purging the probe prior to sample collection (Section 8.4).

5.4 Condensers

5.4.1 The condensers (Ace 5979-14 or equivalent) shall be of sufficient capacity to cool the gas stream to 20°C or less prior to passage through the first sorbent cartridge. The top connection of the condenser shall be able to form a leak-free, vacuum-tight seal without using vacuum sealing greases.

5.5 Sorbent Cartridges

5.5.1 The sorbent cartridges for the VOST are available and acceptable in either of two configurations: the inside/outside (I/O) or inside/inside (I/I) configuration. The terms I/O or I/I pertain to the instrument configuration for thermal desorption of the sorbent tubes. For the I/O design, the carrier gas contacts the inside and outside of the sorbent tubes during the desorption.

while for the I/I design, the carrier gas is directed only through the inside of the cartridge. For the I/O configuration, the cartridge is held in the VOST within an outer glass tube and in a metal carrier (Figure 3). For the I/I configuration, a single glass tube is used, with or without a metal carrier (Figure 4). In either case, the sorbent packing will be the same. The first pair of sorbent cartridges shall be packed with approximately 1.6 grams Tenax GC resin, and the second cartridge of a pair shall be packed with Tenax GC and petroleum based charcoal (3:1 by volume; approximately 1 gram of each).

5.5.2 The second sorbent cartridge shall be packed so that the sample gas stream passes through the Tenax layer first and then through the charcoal layer. Note that when sorbent cartridges are analyzed using the P-T-D GC/MS procedure described in Part B, Section 10.2, the gas flow through the sorbent cartridges during desorption is in the opposite direction from the gas flow through the sorbent cartridges during sample collection. The inlet side of each cartridge during sample collection shall be clearly identified so that it becomes the outlet side during the desorption step of the analytical procedure.

5.5.3 The sorbent cartridges shall be glass tubes with approximate dimensions of 10 centimeters by 1.6 centimeters (cm) I.D. The two acceptable designs (I/O, I/I) for the sorbent cartridge are described in further detail below.

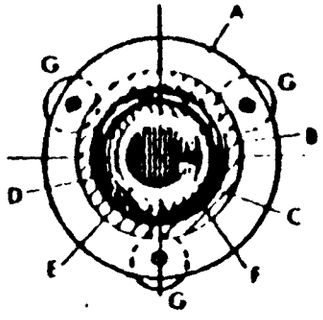

Section cut through glass tubes
(showing screen, C-clip and O-ring in place)

LEGEND

A - Stainless Steel Carrier
B - Glass Tube (103 mm x 20 mm ID)
C - Small Glass Tube (10 cm x 1.6 cm ID)
D - Fine Mesh Stainless Steel Screen
E - Stainless Steel C-Clip
F - O-Ring (Viton)
G - Nuts (3)
H - End Cap with Viton O-Ring
I - Metal Rod with Threaded End (3)
J - Tenax/Charcoal Sorbents
K - Cajon Fitting

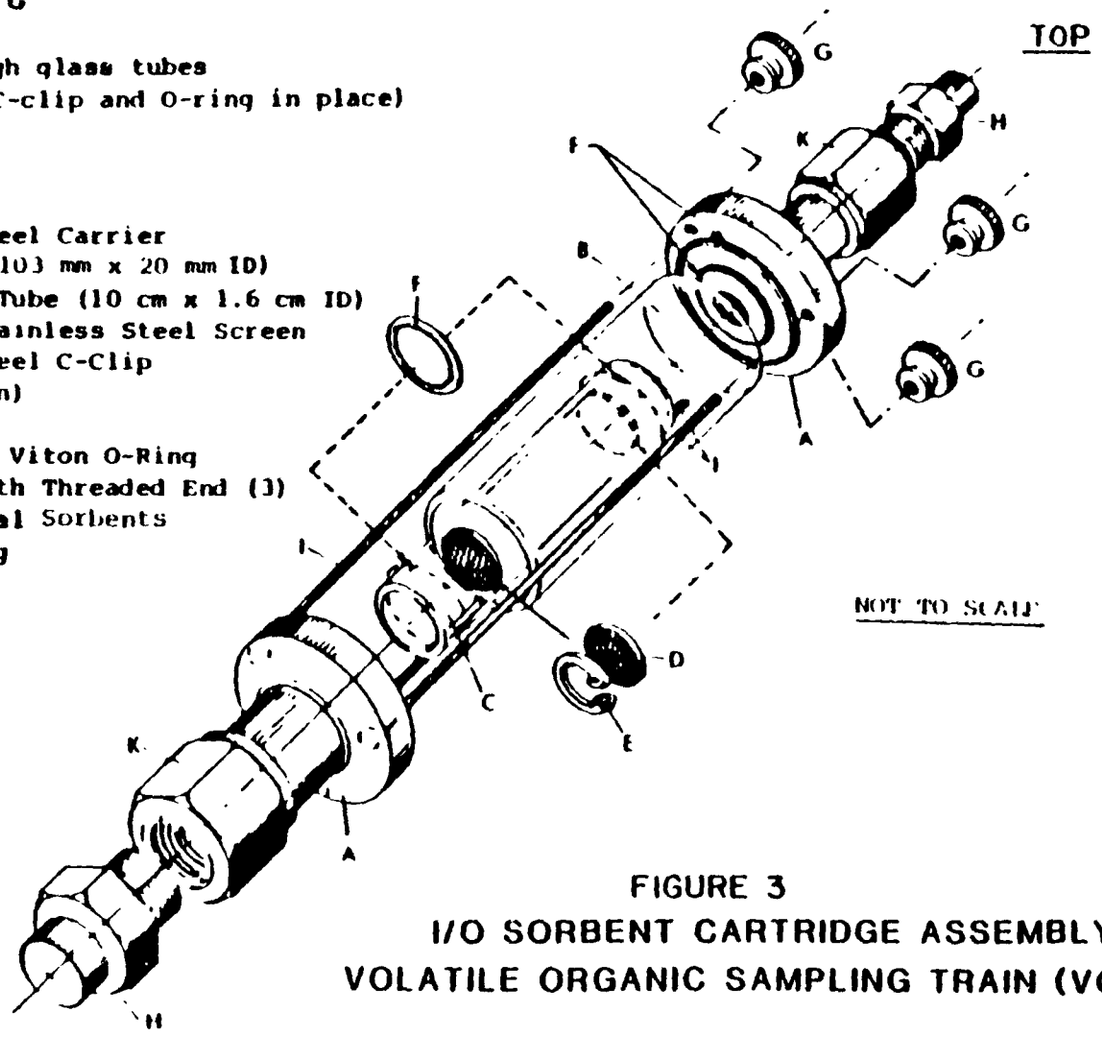

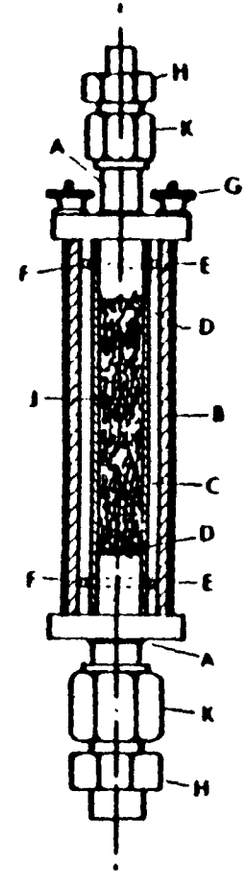

Assembled Trap
NTS

FIGURE 3
I/O SORBENT CARTRIDGE ASSEMBLY
VOLATILE ORGANIC SAMPLING TRAIN (VOST)

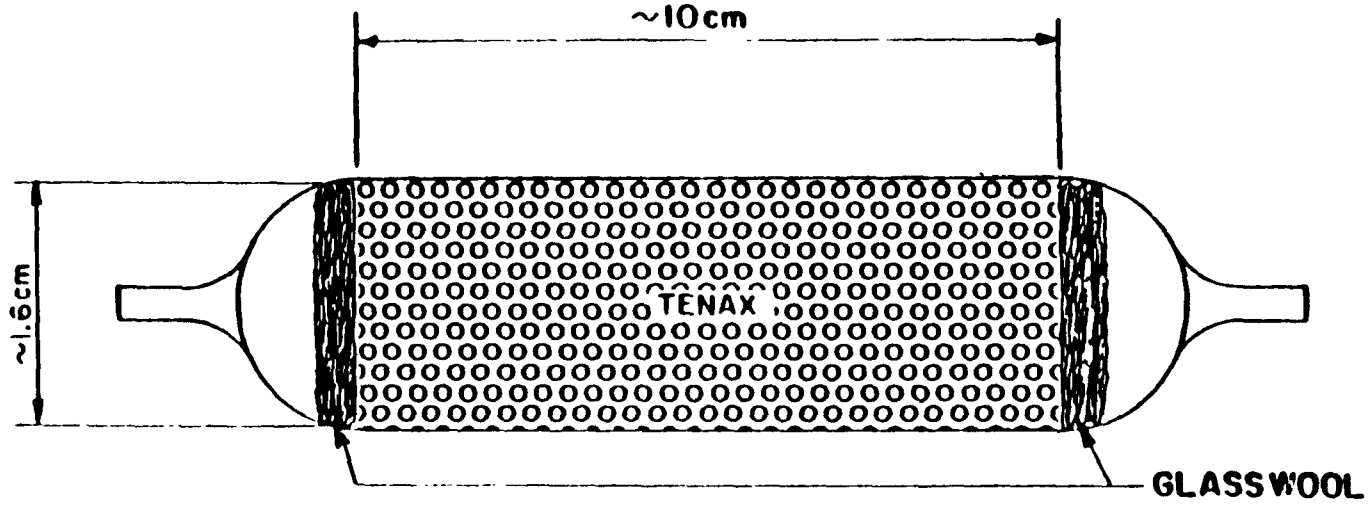

FIGURE 4

INSIDE-INSIDE VOST CARTRIDGE

5.5.3.1 Inside/Outside Type Sorbent Cartridge - A diagram of an I/O type sorbent cartridge is shown in Figure 3. In this design, the sorbent materials are held in the glass tube with a fine mesh stainless steel screen and a C-clip. The glass tube is then placed within a larger diameter glass tube, and held in place using Viton O-rings. The purpose of the outer glass tube is to protect the exterior of the resin-containing tube from contamination. The two glass tubes are held in a stainless steel cartridge holder. The ends of the glass tubes are held in place by Viton O-rings placed in machine grooves in each metal end piece. The three cylindrical rods are secured in one of the metal end pieces and fastened to the other end piece by appropriately sized nuts, thus sealing the glass tubes into the cartridge holder. The end pieces are fitted with a threaded nut onto which a threaded end cap, fitted with a Viton O-ring seal, is placed to protect the resin from contamination during transport and storage.

5.5.3.2 Inside/Inside Type Sorbent Cartridge - A diagram of an I/I type sorbent cartridge is shown in Figure 4. This cartridge is a single glass tube (10 cm by 1.6 cm I.D.) which has the ends reduced in size to accommodate a 1/4 or 3/8-inch Swagelok or Cajon gas fitting. The resin is held in place by glass wool at each end of the resin layer. The amounts of each type of sorbent material used in the I/I design are the same as for the I/O design. Threaded end caps are placed on the sorbent cartridge after packing with sorbent to protect the sorbent from contamination during

storage and transport. Care should be exercised in the placement of the threaded end cap; the male threaded fitting should be backed about 1 mm from the end of the tube prior to tightening to prevent crushing or chipping of the end of the tube.

5.6 Impinger

5.6.1 The impinger which is used to collect aqueous condensate shall have a liquid volume of 125 ml and shall be capable of providing a leak-free seal to the outlet of the Tenax sorbent cartridge. The silica gel drying tube should have sufficient capacity for at least 20 to 30 grams of silica gel.

5.7 Metering System

5.7.1 The metering system for VOST shall consist of: vacuum gauges, a leak-free pump (Thomas Model 107 or equivalent), a calibrated rotameter (Linde Model 150 or equivalent) for monitoring the gas flow rate, a dry gas meter with 2 percent accuracy (7) at the required sampling rate, and related valves and equipment. The dry gas meter shall indicate 1 liter of gas volume for each revolution of the dial. Users of VOST have suggested that the rotameter does not need to be calibrated, but a calibrated rotameter serves as a useful verification of the volume measurement from the dry gas meter.

5.7.2 Provisions will be made for monitoring the temperature of the sample gas stream between the first condenser and first sorbent cartridge. This can be done by placing a thermocouple on the

exterior glass surface of the outlet from the first condenser. The temperature at that point shall be less than 20°C. If it is not, an alternative system, providing increased cooling capacity, must be used.

5.8 Sample Transfer Lines

5.8.1 All sample transfer lines connecting the probe to VOST shall be less than 5 feet in length, if possible, and shall be heat-traced Teflon (to maintain a temperature of at least 130°C in the gas stream) with connecting fittings which are capable of forming leak-free, vacuum-tight connections without the use of sealing grease. All other sample transfer lines used with the VOST (e.g., to connect impinger with second condenser) will be Teflon with connecting fittings that are capable of forming leak-free, vacuum-tight connections without the use of sealing grease.

6.' REAGENTS AND MATERIALS

6.1 Tenax, 35/60 Mesh (2,6-Diphenylene Oxide Polymer)

6.1.1 The new Tenax is Soxhlet extracted for 24 hours with methanol (Burdick & Jackson, pesticide grade or equivalent). The Tenax is dried for 6 hours in a vacuum oven at 50°C before use. Users of I/O and I/I sorbent cartridges have used slightly different thermal conditioning procedures. Although strict equivalence of the procedure has not been demonstrated, these methods have produced results that meet method quality assurance requirements (Part B, Section 7.4). I/O sorbent cartridges packed with Tenax are thermally conditioned by flowing organic-free nitrogen

30 ml/min through the resin while heating to 250°C for 8 hours. Sorbent cartridges of the I/I design packed with Tenax are thermally conditioned for 12 to 16 hours by flowing organic-free nitrogen (30 ml/min) through the resin while heating to 190°C. After thermal conditioning, the sorbent cartridges shall be stored for 24 hours at room temperature prior to monitoring the cartridges for residual organic contamination (see Section 7.4). The use of pentane to extract new Tenax and charcoal to remove non-polar impurities is not recommended. (Users have experienced problems with residual pentane in the sorbents during analysis, and therefore, this procedure is not recommended.)

6.1.2 If very high concentrations of organic compounds have been collected on the resin (e.g., micrograms of analytes), the sorbent may require Soxhlet extraction as described above. Previously used Tenax cartridges are thermally reconditioned by the method described above.

6.2 Charcoal (SKC Lot 104 Petroleum Base or Equivalent)

6.2.1 New charcoal is prepared as described in 6.1.1 above. Due to possible problems with charcoal contamination, new charcoal should be used. Users of VOST have restricted the types of charcoal used in sorbent cartridges to only petroleum-based types. Criteria for other types of charcoal are currently under development. Other types of charcoal are acceptable if recovery of POHC in laboratory evaluations meet the criteria (±50 percent) of the method (Part B, Section 7).

6.3 Viton O-Ring

6.3.1 All O-rings used in VOST shall be Viton. Prior to use, these O-rings shall be thermally conditioned in a vacuum oven at 200°C for 48 hours. O-rings will be stored in clean, screw capped glass containers prior to use.

6.4 Glass Tubes/Condensers

6.4.1 The glass resin tubes and condensers shall be cleaned with a non-ionic detergent in an ultrasonic bath, rinsed well with organic-free water and dried at 110°C. Resin tubes of the I/O design should be assembled as described in Section 7 prior to storage. Resin tubes of the I/I design shall be stored in glass containers with Teflon lined screw caps. Condensers shall be capped with appropriate end caps prior to use.

6.5 Metal Parts

6.5.1 The metal parts (e.g., stainless steel carriers, C-clips, end plugs), used in either the I/O or I/I cartridge design, are cleaned by ultrasonication in a warm non-ionic detergent solution, rinsed with reagent water, air dried and heated in a muffle furnace for 2 hours at 400°C.

6.6 Silica Gel - - Indicating Type, 6-16 Mesh

6.6.1 New silica gel may be used as received. Silica gel which has been previously used shall be dried for 2 hours at 175°C.

6.7 Crushed Ice

6.7.1 Crushed ice from any source may be added to the coolant in the reservoir.

6.8 Water

6.8.1 Water used for leak checking resin cartridges and rinsing glassware shall be reagent (see Part B, Section 5.1); water used for cooling train components in the field may be tap water.

6.9 Glass Wool

6.9.1 Glass wool shall be Soxhlet extracted for 8 to 16 hours using pentane, and oven dried at 110°C before use. The glass wool shall be checked prior to use to ensure that it does not contain residual pentane. If all pentane cannot be removed, an alternate solvent such as methanol may be used.

6.10 Nitrogen

6.10.1 Nitrogen gas will be organic-free (Linde-Union Carbide, 99.999% pure, hydrocarbon-free, or equivalent). In-line moisture traps, 5A° molecular sieve adsorbent tubes, or cryogenic traps may be used to ensure purity.

7. ASSEMBLY AND CONDITIONING OF VOST SORBENT CARTRIDGES

7.1 Introduction

7.1.1 This section describes assembly of the sorbent cartridges and procedures for storage and transport of assembled cartridges.

The assembly and packing of the sorbent cartridges should be carried out in an area free of volatile organic material. This is preferably done in a laboratory in which no organic solvents are handled or stored, and in which the laboratory air is charcoal filtered. Alternatively, the assembly procedure can be conducted in a glove box or glove bag which can be purged with organic-free nitrogen.

7.2 Assembly of Tenax Cartridges

7.2.1 The Tenax, glass tubes and metal cartridge parts are cleaned and stored according to the procedures described in Section 6. Approximately 1.6 grams of Tenax is weighed and packed into the sorbent tube which has a stainless steel screen and C-clips (I/O design) or by glass wool (I/I design) in the downstream end. The Tenax is held in place by inserting a stainless steel screen and C-clips in the upstream end (I/O design) or glass wool (I/I design). The cartridges are assembled in the metal holders (Section 5.5) and leak checked by putting on one of the end caps and pressurizing the cartridge to 30 psi with organic-free nitrogen and immersing the cartridge in distilled water to check for the appearance of bubbles. Cartridges which are determined to be leak-free are then conditioned as described in Section 7.4.

7.2.2 Assembled and conditioned resin tubes of the I/O design are placed in ice water for storage and transport. Conditioned resin tubes of the I/I design are capped and placed in ice water

for storage and transport. Limited experience by VOST users for storing and transporting resin tubes of the I/I design indicates that these tubes may be stored and transported in screw capped culture tubes placed in a clean glass or metal container which contains clean charcoal. The storage container is kept cold using ice or cold pack storage. Storage containers shall be kept in an area free from sources of organic contamination. The need for these precautions is dependent upon the user's ability to maintain blank cartridges free from contamination during storage and transport.

7.3 Assembly of Tenax/Charcoal Cartridges

7.3.1 The Tenax, charcoal and metal cartridge parts are cleaned and stored according to the procedures described in Section 6. The tubes are packed with approximately a 3:1 volume ratio of Tenax and charcoal (approximately 1 gram of each). The cartridge is assembled such that the inlet side during sampling collection is Tenax, followed by a layer of charcoal at the outlet side of the sorbent cartridge. The Tenax and charcoal are held in place by the stainless steel screens and C-clips (I/O design) or by glass wool (I/I design). The glass tubes of the I/O design containing the Tenax and charcoal are then leak checked as described in Section 7.2, checked for quality assurance as described in Section 7.4, and placed in the metal carriers according to the procedures outlined in Section 5.5. The end caps are placed on the assembled cartridges, and the assembled cartridges are placed

in ice water for storage and transport as described in Section 7.2. Glass tubes of the I/I design are leak checked as described in Section 7.2, and conditioned as described in Section 7.4. The end caps are placed on the assembled cartridges, and they are placed in a suitable container for storage and transport as described in Section 7.2.

7.4 Sorbent Cartridge Quality Assurance

7.4.1 This section describes two methods which can be used to verify that the sorbent cartridges (Tenax and Tenax/charcoal) are free from background contamination prior to sample collection.

7.4.2 The gas chromatograph with flame ionization detector is calibrated using direct injection of propane standards at the appropriate concentrations. The chromatographic column shall be 1.8 m x 0.25 cm I.D., stainless steel or glass packed with 1% SP-1000 on Carbopack (60/80 mesh) or equivalent. Following assembly and leak checking of the sorbent cartridges, they are connected to a source of organic-free nitrogen. Nitrogen is passed through each trap at a flow rate of at least 30 ml/min, while the traps are heated to 200°C. The effluent from the trap is monitored with a flame ionization detector to check for emission of volatile organic compounds from the cartridge. The conditioning is continued until the amount of total chromatographable organics is below 0.2 ng as propane.

7.4.3 The gas chromatograph with flame ionization detector is calibrated by analyzing a Tenax cartridge which has been spiked with 175 ng benzene, 175 ng toluene and 150 ng bromofluorobenzene (BFB). The cartridge is spiked using the solvent-flush technique (see Part B, Section 6.2.3). The chromatographic conditions shall be the same as those described in Part B, or shall demonstrate the capability of identifying background levels of volatile POHCs with the required sensitivity. Following assembly and leak checking, the sorbent cartridge(s) is placed in the desorption heater for 10 minutes with a helium flow of 50 ml/min. The effluent from the cartridge is passed through a trap filled with glass beads which is cooled in liquid nitrogen. (If a pair of Tenax and Tenax/charcoal cartridges are monitored in a single desorption run, the Tenax/charcoal cartridge should be upstream ofthe Tenax cartridge.) At the end of the 10-minute desorption period, the glass bead filled trap is heated, the carrier gas flow directed to a gas chromatograph equipped with flame ionization detector and chromatographic column suitable for volatile organic analysis (see Part B, Section 4.3.2). Blank sorbent cartridges which are monitored using this technique shall contain less than 2 ng total chromatographable organics (as benzene or toluene). If in using this procedure the background exceeds 10 ng (as benzene or toluene), the cartridges must be recleaned and reanalyzed.

8. SAMPLE COLLECTION PROCEDURE

8.1 Pretest Preparation

8.1.1 All train components shall be cleaned and assembled as described in Sections 5, 6, and 7. The dry gas meter shall have

been calibrated within 30 days prior to use. All field data shall be recorded on a Field Data Sheet (or field notebook). An example of a Field Data Sheet for VOST is shown in Figure 5.

8.2 VOST Assembly

8.2.1 The VOST is assembled according to the schematic diagram in Figure 2. Cooling water is circulated to the condensers and the temperature of the cooling water shall be maintained near 0°C. The end caps of the sorbent cartridges will be placed in a clean screw capped glass container during sample collection. The condensate pot shall not be immersed in ice water.

8.3 Leak Checking

8.3.1 The train is leak checked by closing the valve at the inlet to the first condenser and pulling a vacuum equivalent to 10 inches Hg (250 mm Hg) above the system's operating pressure. The traps and condensers are isolated from the pump and the leak rate noted. The system shall hold at 10 inches Hg above the system operating pressure with no discernible leakage (pressure increase of less than 0.1 inches Hg/min). If the leak check does not meet specifications, the cause of the problem must be identified and corrected and leak check repeated. After leak checking, the train should be returned to atmospheric pressure by attaching a charcoal filled tube to the isolation valves above the first condenser and opening the valve to admit air to the train through the charcoal filter. These procedures will minimize contamination of VOST train components by excessive exposure to the fugitive emissions at hazardous waste incinerator sites.

Plant _____ Stack No. _____

Date _____ Probe No. _____

Location _____ VOST No. _____

Operator _____ Rotameter No. _____

Field Blank I.D.: Tenax _____ Dry Gas Meter No. _____

Tenax/Charcoal _____

Pair No.[b]	Leak Check	Cartridge I.D.		Rotameter Reading (l/min)	Time		Sampling Duration (min)	Probe Temp. (°C)	Barometric Pressure (in of Hg)	Condenser Outlet Temp. (°C)	Meter Temp. (Outlet)	Dry Gas Meter		Gas Sample Volume (liters)	Comments
		Tenax	Tenax/ Charcoal		Initial	Final						Initial	Final		

Condensate Samples:

Run No.	Sample I.D.	Comments

NOTES: [a]Reading should be tabulated at the beginning of a run and every five minutes thereafter.
[b]Refers to sample collection on one pair of Tenax and Tenax/charcoal traps.

FIGURE 5. VOST FIELD DATA SHEET[a]

8.3.2 After leak checking but before the initiation of sample collection, the probe shall be purged with stack gas. This can be accomplished by attaching a pump to the isolation valve above the first condenser and drawing stack gas through the probe via the isolation valve, so that at the initiation of sample collection the probe is purged of ambient air.

8.4 Sample Collection

8.4.1 Prior to the initiation of sample collection, the probe shall be located in the stack at a point of average stack gas velocity and temperature. (These values can be determined using the procedures described in References 6 and 7.) Care should be exercised in the location of the probe in the stack to minimize effects of dilution air which may enter the stack through the sampling port and thereby impair the collection of a representative sample of the stack gas.

8.4.2 After leak checking (see Section 8.3.1), sample collection is accomplished by opening the valve at the inlet to the first condenser, turning on the pump, and sampling at a rate of 1 liter/minute for 20 minutes. The volume of sample for any pair of traps shall not exceed 20 liters. The temperature of the gas stream at the inlet to the first sorbent cartridge must be maintained at or below 20°C during sample collection (see Section 5.6.2).

8.4.3 After the collection of 20 liters of sample, the train is leak tested using the procedures described in Section 8.3. If this post leak test criterion is not met, the samples shall not be analyzed. If leak check criterion is met, the train is returned to atmospheric pressure as described in Section 8.3.1, the two sorbent cartridges removed, the end caps replaced, and the cartridges returned to a suitable container for storage and transport until analysis (see also Section 7.2.2).

8.4.4 In some cases, there may be a requirement to analyze the aqueous condensate. This situation may arise for water soluble volatile organic compounds. For these situations, preliminary laboratory evaluation of the sampling and recovery efficiency (including the purging efficiencies of the compounds) must be performed (Part B, Sections 7 and 11). Sampling and analysis procedures for water soluble volatile organics are currently being developed. In this case, when a pair of sorbent cartridges is changed, duplicate samples of the aqueous condensate should be poured into 40 ml glass vials equipped with plastic screw caps (Pierce 13075 or equivalent), and Teflon-faced silicon septa (Pierce 12722 or equivalent). If insufficient condensate is available, the vials shall be topped off with reagent water. The vials shall be carefully filled just to overflowing so that no air bubbles pass through the sample as the vial is being filled. The vial shall be sealed so that no air bubbles are entrapped in it. Vials shall be stored and transported at ice or cold pack temperature.

8.4.5 A new pair of cartridges is placed in the VOST. The VOST leak checked as described in Section 8.3 and the sample collection process repeated as described above. Sample collection continues until six pairs of cartridges have been taken (see Section 2.3). A maximum of six pairs of cartridges may be taken over a 2-hour sampling period (see Section 2.3).

8.4.6 All sample cartridges shall be stored on cold packs or ice until ready for analysis.

8.5 Field, Trip and Laboratory Blanks/Aqueous Field Blanks

8.5.1 Field Blanks - Blank Tenax and Tenax/charcoal cartridges are taken to the sampling site and the end caps removed for the period of time required (approximately 5 minutes) to exchange two pairs of cartridges on VOST. After the two VOST cartridges have been exchanged, the end caps are replaced on the blank Tenax and Tenax/charcoal tubes. These are returned to appropriate storage (see Section 7.2.2) and analyzed with the sample cartridges. At least one pair of field blanks (one Tenax, one Tenax/charcoal) shall be included with each six pairs of sample cartridges collected (or for each field trial using VOST to collect volatile POHCs). It is advisable to use two pairs of field blanks for each six pairs of cartridges collected.

8.5.2 Trip Blanks - At least one pair of blank cartridges (one Tenax, one Tenax/charcoal) shall be included with the shipment of cartridges to a hazardous waste incinerator site. These trip

blanks will be treated as any other cartridges except that the end caps will not be removed during storage at the site. This pair of cartridges will be analyzed to monitor potential contamination which may occur during storage and shipment. One user (5) recommended including one pair of trip blanks for each VOST run conducted during a trial burn to obtain a more meaningful basis for blank correction of sample cartridges (Part B, Section 12.1.2).

8.5.3 Laboratory Blanks - One pair of blank cartridges (one Tenax, one Tenax/charcoal) will remain in the laboratory using the method of storage for field samples. If the field and trip blanks contain high concentrations of contaminants (e.g., greater than 2 ng of a particular POHC), the laboratory blank shall be analyzed in order to identify the source of contamination.

8.5.4 Aqueous Field Blanks - If the aqueous condensate is to be analyzed for volatile POHCs, an aqueous field blank is required. This consists of duplicate samples of reagent water placed in vials described in Section 8.4.3. These vials shall be stored and shipped in the same way as empty vials/aqueous condensate samples, and should be analyzed at the same time as the aqueous condensate samples. Additionally, a reagent water sample (prepared as above) will be retained in storage in the laboratory. If the analysis of aqueous field blanks shows the presence of POHCs, the corresponding laboratory blank shall be analyzed to verify that the residual contamination is not due to contamination of the aqueous field blanks at the time of preparation or during storage in the laboratory.

PART B

PROTOCOL FOR ANALYSIS OF SORBENT CARTRIDGES

FROM VOLATILE ORGANIC SAMPLING TRAIN

1. SCOPE AND APPLICABILITY

1.1 This method covers the analysis of volatile POHCs collected on Tenax and Tenax/charcoal sorbent cartridges using a VOST. Much of the description for purge-trap-desorb (P-T-D) GC/MS analysis is included in References 8 and 9. Since the majority of gas streams sampled using VOST will contain a high concentration of water, the analytical method is based on the quantitative thermal desorption of volatile POHCs from the Tenax and Tenax/charcoal cartridges and analysis by P-T-D GC/MS in order to minimize the effects of water on the analysis. This method is applicable to organic compounds with boiling points between 30° and 100°C. Many compounds with boiling points below 30°C and between 100° and 150°C, may be efficiently collected and analyzed using this method. However, laboratory evaluation of the collection and recovery efficiency for compounds with boiling points outside the range of 30° to 100°C (or those for which no VOST data are available) shall be performed (see Section 7).

1.2 This method is applicable to the analysis of Tenax and Tenax/charcoal cartridges used to collect volatile POHCs from wet stack gas effluents from hazardous waste incinerators.

1.3 The sensitivity of the analytical method for a particular volatile POHC depends on the level of interferences, the presence of detectable levels of volatile POHCs in blanks, and the ability to purge the volatile POHCs from water. The target detection limit for the method is 0.1 $\mu g/m^3$ (0.1 ng/l) in the stack gas. This corresponds to 2.0 ng adsorbed on a single pair of Tenax and Tenax/charcoal cartridges. Since 2 ng of a POHC may not be detectable by P-T-D GC/MS analysis, the method is designed to permit thermal desorption of up to five pairs of Tenax and Tenax/charcoal cartridges onto a single pair for analysis in order to achieve the target detection limit of the method. For a POHC present in the gaseous effluent at a concentration of 0.1 $\mu g/m^3$ (0.1 ng/l), the desorption of multiple pairs of cartridges onto a single pair for analysis can provide a total of 10 ng for analysis by P-T-D GC/MS.

1.4 This method is recommended for use only by experienced analytical chemists or under the close supervision of such qualified persons.

2. SUMMARY OF METHOD

2.1 A schematic diagram of the analytical system is shown in Figure 6. Pairs of the sorbent cartridges are spiked with an internal standard and thermally desorbed for 10 minutes at 180°C with organic-free nitrogen gas (at a flow rate of 100 ml/min), bubbled through 5 ml of organic-free water, and trapped on an analytical sorbent trap. After the 10-minute desorption, the

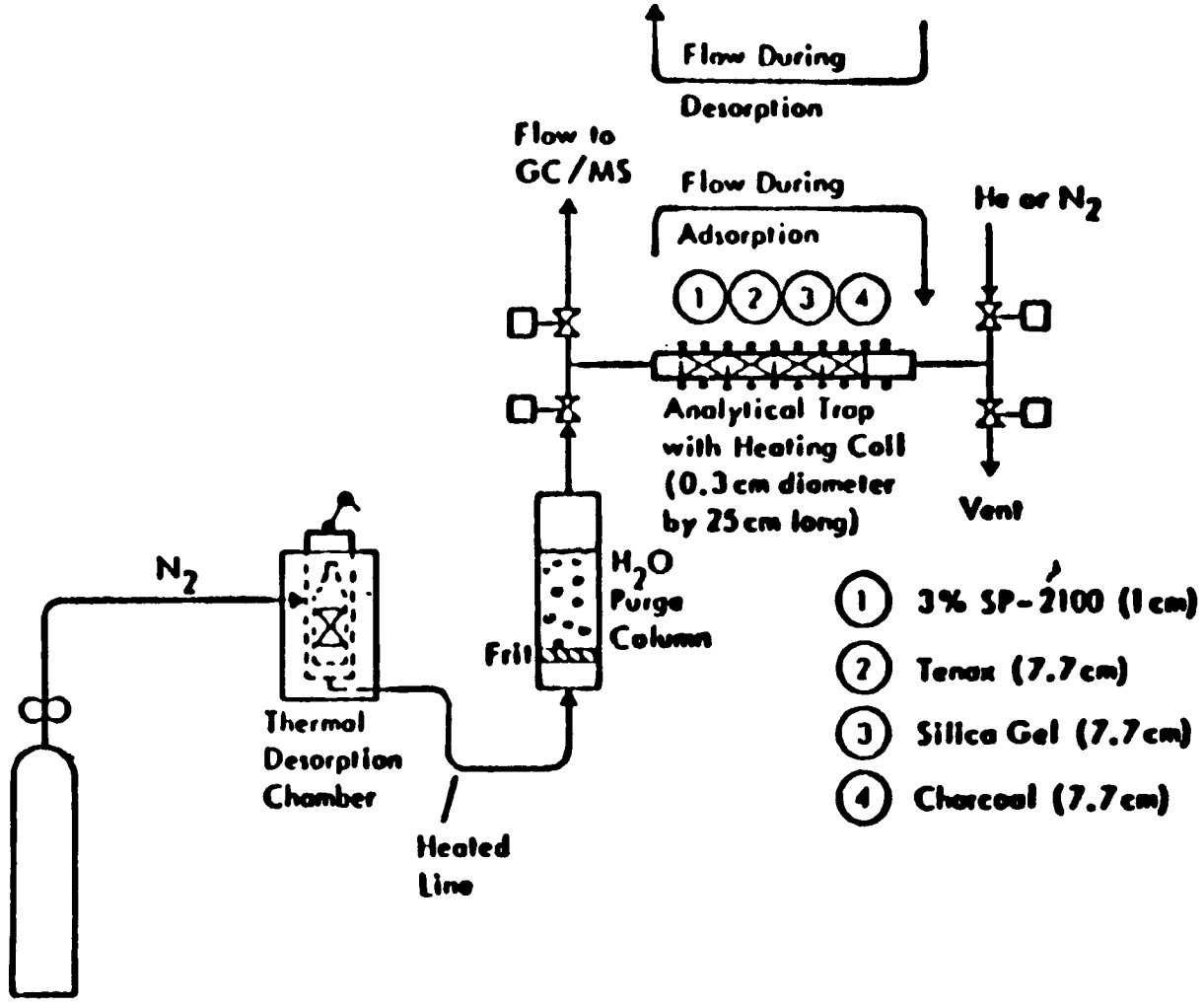

FIGURE 6

SCHEMATIC DIAGRAM OF TRAP DESORPTION

/ANALYSIS SYSTEM

analytical sorbent trap is rapidly heated to 180°C with the carrier gas flow reversed so that the effluent flow from the analytical trap is directed into the GC/MS. The volatile POHCs are separated by temperature programmed gas chromatography and detected by low resolution mass spectrometry. The concentrations of volatile POHCs are calculated using the internal standard technique. To achieve increased sensitivity, multiple pairs of cartridges (up to five pairs) may be desorbed onto a single pair of Tenax and Tenax/charcoal cartridges. The resulting pair is analyzed by P-T-D GC/MS.

3. PRECISION AND ACCURACY

3.1 The overall accuracy of sample collection and analysis using VOST has been determined in laboratory evaluations to average ±50 percent for analysis of three replicate cartridges (5). These values may be revised as further evaluation of VOST performance is conducted.

3.2 The precision for the internal standard response (area) should be 20 percent during any given analysis period at a particular multiplier voltage of the mass spectrometer.

4. APPARATUS

4.1 Thermal Desorption Unit

4.1.1 The thermal desorption unit (Nutech Corporation Model 320 or equivalent) shall be capable of thermally desorbing the sorbent

resin tubes. It shall be capable of rapidly heating the tubes to 180°C±10°C with flow of organic-free nitrogen through the tubes.

4.2 Purge and Trap Unit

4.2.1 The purge and trap unit consists of three separate pieces of equipment: the sample purger, analytical sorbent trap and the desorber. It should be capable of meeting all requirements of Sections 5.2 thru 5.2.4 of EPA Method 624 for analysis of purgeable organic compounds from water (8, 9). The analytical trap as specified in EPA Method 624 consists of 3% SP-2100, Tenax, silica gel, charcoal. Some users have found that improved performance can be achieved using only Tenax and charcoal in the analytical sorbent trap (5).

4.3 GC/MS System

4.3.1 Gas Chromatograph - An analytical system complete with a temperature programmable GC suitable for on-column injection, and all required accessories including syringes, analytical columns, and gases.

4.3.2 Column - Column dimensions shall be 1.8 m long by 0.25 cm I.D., stainless steel or glass, packed with 1% SP-1000 on Carbopack B (60/80 mesh) or equivalent.

4.3.3 Mass Spectrometer - Capable of scanning from 20 to 260 amu every 7 seconds or less, utilizing 70 volts (nominal) electron energy in the electron impact ionization mode and producing a mass

spectrum which meets all criteria described in Method 624 when 50 ng of 4-bromofluorobenzene (BFB) is injected through the GC inlet

4.3.4 GC/MS Interface - Any GC to mass spectrometer interface that gives acceptable calibration points at 50 ng or less per injection for each of the parameters of interest and achieves all performance criteria of Method 624 may be used. GC to mass spectrometer interfaces constructed of all-glass or glass-lined materials are recommended. Glass can be deactivated by silanizin with dichloro-dimethylsilane.

4.3.5 Data System - A computer system must be interfaced to the mass spectrometer that allows the continuous acquisition and storage on machine readable media of all mass spectra obtained throughout the duration of the chromatographic program. The computer must have software that allows searching any GC/MS data file for ions of a specified mass and plotting such ion abundances versus time or scan number. This type of plot is defined as an Extracted Ion Current Profile (EICP). Software must also be available that allows integrating the abundance in any EICP between specified time or scan number limits.

5. REAGENTS

5.1 Reagent Water

5.1.1 Reagent water is defined as water in which an interferent is not observed at the detection limit of the parameters of interest.

5.1.2 Reagent water may be generated by passing tap water through a carbon filter bed containing about 450 grams of activated carbon (Calgon Corporation, Filtrasorb-300 or equivalent).

5.1.3 Reagent water may also be prepared by boiling distilled water for 15 minutes. Subsequently, while maintaining the temperature at 90°C, bubble a contaminant-free, inert gas through the water for one hour. While still hot, the water should be transferred to a narrow mouth, screw cap bottle and sealed with a Teflon lined septum and cap.

5.1.4 Other methods which can be shown to produce reagent water can be used.

5.2 Analytical Trap Reagents

a) Tenax (60/80 mesh) - Chromatographic grade or equivalent

b) Methyl silicone packing - 3% OV-1 on Chromosorb W (60/80 mesh) or equivalent

c) Silica gel, Davison Chemical (35/00 mesh), Grade 15 or equivalent

d) Charcoal, petroleum based (SKC Lot 104 or equivalent) (see Section 6.2 in Part A)

5.3 Stock Standard Solution

5.3.1 Stock standard solutions will be prepared from pure standard materials or purchased certified solutions. The stock standards should be prepared in methanol using assayed liquids or gases as appropriate. Because of the toxicity of some of the organohalides, primary dilutions of these materials should be prepared in a hood. A NIOSH/MESA approved toxic gas respirator should be used when the analyst handles high concentrations of such materials.

5.3.2 Fresh standards should be prepared weekly for volatile POHCs with boiling points of <30°C. All other standards must be replaced monthly, or sooner if comparison with check standards indicates a problem.

5.4 Secondary Dilution Standards

5.4.1 Using stock standard solutions, prepare secondary dilution standards in methanol which contain the compounds of interest either singly or mixed together, and at concentrations such that the desorbed calibration standards will bracket the working range of the analytical system.

5.5 Bromofluorobenzene (BFB) Standard

5.5.1 Prepare a 25 µg/ml solution of BFB in methanol.

5.6 Deuterated (d_6) Benzene Standard

5.6.1 Prepare a 25 µg/ml solution in methanol.

6. CALIBRATION

6.1 Assembly of P-T-D Device

6.1.1 Assemble a purge and trap desorption device (P-T-D) which meets all the requirements of Section 10.2 of this protocol and Section 5.2 of USEPA Method 624 (3).

6.1.2 Connect the thermal desorption device to the purge and trap device. Calibrate the P-T-D GC/MS system using the internal standard technique (Section 6.2).

6.2 Internal Standard Calibration Procedure

6.2.1 This approach requires the use of deuterated benzene as the internal standard for these analyses. Other internal standards may be proposed for use in certain situations. The important criteria for choosing a particular compound as an internal standard are that it be similar in analytical behavior to the compounds of interest, and it can be demonstrated that the measurement of the internal standard is not affected by method or matrix interferences. Other internal standards which have been used are d_{10}-ethylbenzene and d_4-1,2-dichloroethane. Several users add 50 ng of BFB to all sorbent cartridges (in addition to one or more internal standards) to provide continuous monitoring of the GC/MS performance relative to BFB.

6.2.2 Prepare calibration standards at a minimum of three concentration levels for each analyte of interest. The calibration standards are prepared by spiking a blank Tenax or Tenax/charcoal

cartridge with a methanolic solution of the calibration standards (including 50 ng of the internal standard, such as deuterated benzene) using the flash evaporation technique.

6.2.3 The cartridge shall be mounted in the gas chromatograph so that the carrier gas enters the cartridge in the same direction as during sample collection (which is opposite to the direction of gas flow during P-T-D GC/MS analysis). The glass cartridge should be attached to the injection port of a gas chromatograph. The injector temperature is maintained at 160°C, and the carrier gas flow through the cartridges should be maintained at about 50 ml/min.

6.2.4 The flash evaporation technique requires filling the needle of a 5.0 (µl) syringe with clean methanol and drawing air into the syringe until the tip of the plunger reaches the 1.0 µl mark. This is followed by drawing a methanolic solution of the calibration standards (containing 25 µg/µl of the internal standard) until the tip of the plunger reaches the 3.0 µl mark. The contents of the syringe should be slowly expelled through the gas chromatograph injection port over about 15 seconds. After 25 seconds have elapsed, the gas flow through the cartridge should be shut off, the syringe removed, and the cartridge analyzed by the P-T-D GC/MS procedure outlined in Section 10.2. The total flow of gas through the cartridges during addition of calibration standard to blank cartridges, or internal standards to sample cartridges, should be 25 ml or less to avoid breakthrough of volatile sample components.

6.2.5 Analyze each calibration standard on both Tenax and Tenax/charcoal cartridges according to Section 10. The calibration procedures shall be identical to those used for analysis of sample cartridges. If cartridges are analyzed separately, then the Tenax and Tenax/charcoal cartridges must be calibrated separately. The direction of carrier gas flow through the cartridges during the desorption step should be opposite from the gas flow through the cartridge during sample collection so the inlet side of the cartridge during sample collection becomes the outlet side during P-T-D analysis. Tabulate the area response of the characteristic ions of each analyte against the concentration of the internal standard and calculate response factor (RF) for each compound using Equation 1.

$$RF = A_s C_{is} / A_{is} C_s \qquad [1]$$

where A_s = Area of the characteristic ion for the analyte to be measured

A_{is} = Area of the characteristic ion for the internal standard

C_{is} = Amount (ng) of the internal standard

C_s = Amount (ng) of the volatile POHC in calibration standard

If the RF value over the working range is a constant (<10% RSD), the RF can be assumed to be invariant and the average RF can be used for calculations. Alternatively, the results can be used to plot a calibration curve of response ratios, A_s/A_{is} versus RF.

6.2.6 The working calibration curve or RF must be verified on each working day by the measurement of one or more of the calibration standards. If the response varies by more than ±25%, new calibration standards must be prepared and analyzed.

7. QUALITY CONTROL

7.1 Each laboratory that uses this method is required to operate a formal quality control program. The minimum requirements of this program consist of an initial demonstration of laboratory capability and the analysis of blank Tenax and Tenax/charcoal cartridges spiked with the analytes of interest. The laboratory shall demonstrate collection and/or recovery efficiencies for compounds with boiling points outside the 30° to 100°C range, which meet the method criteria, prior to field use of the VOST (Part A, Section 3.2). The laboratory is required to maintain performance records to define the quality of data which are generated. Ongoing performance checks must be compared with established performance criteria to determine if results are within the expected precision and accuracy limits of the method. (Note: NBS traceable audit cylinders are being developed by Research Triangle Institute under the direction of USEPA-EMSL, Research Triangle Park, NC. The cylinders may be used for performance trials and evaluation of collection and recovery efficiencies in lieu of the methods specified in this section.)

7.1.1 Before performing any analyses, the analyst must demonstrate the ability to generate acceptable precision and accuracy with this method. This ability is established as described in Section 7.2.

7.1.2 Recovery data for compounds boiling between 100° and 150°C must be provided which meets the method criteria (see Section 7.2.2). Laboratory evaluation is required in lieu of that data. The method of evaluation is that specified in Section 7.2 with the exception that it is not required to pull 20 liters of organic-free nitrogen through the sorbent cartridges.

7.1.3 Laboratory evaluation of collection and recovery efficiencies shall be performed for compounds with boiling points below 30°C. Due to the possibility of sample breakthrough and poor recovery of the sample from the charcoal, the evaluation shall be comparable to that described in Reference 5. A gas stream containing the POHC shall be generated and sampled using the VOST. The sampling rate for the laboratory evaluation shall be the same as that proposed for field application. The laboratory evaluation must meet the precision and accuracy criteria described in Section 7.2.2.

7.1.4 The laboratory must spike all Tenax and Tenax/charcoal cartridges with the internal standard(s) to monitor continuing laboratory performance. This procedure is described in Section 6.2.

7.2 To establish the ability to generate acceptable accuracy and precision, the analyst must spike blank Tenax and Tenax/charcoal with the analytes of interest at two concentrations in the working range by the flash vaporization technique discussed in Sections 6.2.3 and 6.2.4. The cartridges are removed from the gas chromatograph and connected to a source of organic-free nitrogen. The cartridges sample 20 liters of nitrogen at a flow rate equivalent to that proposed for field use of VOST.

7.2.1 The average response factor (RF) and the standard deviation (S) for each must be calculated.

7.2.2 The average recovery and standard deviation must fall within the expected range for determination of volatile POHCs using this method. The expected range for recovery (indicative of accuracy) of volatile POHCs using this method is ±50 percent. The expected standard deviation is 25 percent.

7.3 The analyst must calculate method performance criteria for the internal standard.

7.3.1 Calculate upper and lower control limits for method performances using the average area response (A) and standard deviation (S) for internal standard:

Upper Control Limit (UCL) = A + 3S

Lower Control Limit (LCL) = A - 3S

The UCL and LCL can be used to construct control charts which are useful in observing trends in performance. The control limits must be replaced by method performance criteria as they become available from the USEPA.

7.4 Each day, the analyst must demonstrate through analysis of blank Tenax and Tenax/charcoal cartridges and reagent water that interferences from the analytical system are under control.

8. SAMPLE COLLECTION, PRESERVATION AND HANDLING

8.1 The requirements for sample collection, preservation, and handling are described in Part A of this protocol.

9. DAILY GC/MS PERFORMANCE TESTS

9.1 The daily GC/MS performance tests required for this method are described in Section 10 of EPA Method 624 (9). The key abundance criteria for BFB which must be met before any samples are analyzed are listed below. This can be done by injecting 50 ng of BFB directly on the column or by adding 50 ng of BFB to a blank Tenax sorbent cartridge (see Sections 6.2.3 and 6.2.4) and desorbing this cartridge according to the procedures described in Section 10. The latter procedure is preferred when all sample sorbent cartridges are spiked with BFB in addition to one or more of the internal standards discussed in Section 6.2.1.

BFB KEY ION ABUNDANCE CRITERIA

Mass	Ion Abundance Criteria
50	15 to 40% of mass 95
75	30 to 60% of mass 95
95	Base Peak, 100% Relative Abundance
96	5 to 9% of mass 95
173	<2% of mass 174
174	>50% of mass 95
175	5 to 9% of mass 174
176	>95% but <101% of mass 174
177	5 to 9% of mass 176

10. SAMPLE DESORPTION AND GAS CHROMATOGRAPHY

10.1 The P-T-D GC/MS procedures are those described in Section 11 of Method 624 (9) with the addition of the procedure described in Section 10.2 for desorption of Tenax and Tenax/charcoal cartridges.

10.2 The schematic of the P-T-D GC/MS system is shown in Figure 6. The sample cartridge is placed in the thermal desorption apparatus (Nutech 320 or equivalent) and desorbed in the P-T-D system by heating to 180°C for 10 minutes. Sample cartridges may be desorbed in pairs. However, if the analyte concentrations are anticipated to be sufficiently high to saturate the GC/MS when desorbed in pairs, consideration should be given to individual analysis of cartridges. The desorbed components pass into the bottom of the water column, are purged from the water and

collected on the analytical sorbent trap. After the 10-minute desorption period, the compounds are desorbed from the analytical sorbent trap into the GC/MS system according to the procedures described in Section 11 of Method 624.

11. AQUEOUS CONDENSATE

11.1 Analysis of aqueous condensate samples should be performed according to the procedures described in References 8 and 9. If the volatile POHCs of interest are water soluble, it is necessary to demonstrate that this method is capable of recovery of the volatile POHCs of interest using Method 624. This can be accomplished by P-T-D GC/MS analysis of reagent water which has been fortified with the analytes of interest.

11.2 If adequate recovery of water soluble volatile POHCs cannot be achieved using the procedures described in References 8 and 9, alternative methods for analysis, such as direct aqueous injection, may be required. If an alternative analytical method is used, method performance must be documented by analysis of laboratory reagent water which has been fortified with the volatile POHCs of interest.

11.3 Methods for analysis of water soluble volatile POHCs in aqueous condensate are currently under development.

12. QUALITATIVE IDENTIFICATION

12.1 The qualitative identification procedure of volatile POHCs using this protocol is described in Section 12 of Method 624 (9).

13. CALCULATIONS

13.1 When an analyte has been qualitatively identified, quantification should be based on the integrated abundance from the EICP of the primary characteristic ion chosen for that analyte. If the sample produces an interference for the primary characteristic ion, a secondary characteristic ion should be used.

13.1.1 Using the internal standard calibration procedure, the amount of analyte in the sample cartridge is calculated using the response factor (RF) determined in Section 6.2.5 and Equation 2.

$$\text{Amount of POHC} = A_s C_{is} / A_{is} RF \qquad [2]$$

where A_s = Area of the characteristic ion for the analyte to be measured

A_{is} = Area for the characteristic ion of the internal standard

C_{is} = Amount (ng) of internal standard

13.1.2 The choice of methods for evaluating data collected using VOST for incinerator trial burns is a regulatory decision. The procedures used extensively by one user are outlined below (10).

13.1.3 The total amount of the POHCs of interest collected on a pair of traps should be summed. These values should then be blank corrected. Guidelines for blank correction of sample cartridges are outlined below.

13.1.3.1 After all blanks (field and trip) are analyzed, a paired t-test should be used to determine whether trip blanks are significantly different from field blanks. If no difference is found, then the mean and standard deviation of the combined field and trip blanks for each POHC of interest is calculated, and that value is used as the blank.

13.1.3.2 If, using the paired t-test, the field and trip blanks are determined to be different, then the field blank (or the mean of multiple field blanks) associated with a particular run should be used as the blank value for that particular run.

13.1.3.3 If an individual field blank is used as the blank value for a particular run, the VOST user must evaluate whether this blank is different from sample cartridges associated with this blank. Although no specific criteria are offered here for guidance in this case, specific criteria for use of individual field blanks for blank correction will be developed as more data for use of VOST becomes available. This situation can be alleviated by including two field blanks (i.e., two blank Tenax and two blank Tenax/charcoal cartridges) per run.

13.1.4 Next, for each sample/POHC combination, a determination must be made as to whether a particular sample is significantly different from the associated blank. If the mean of the trip and field blanks is used, then a sample is different from the blank if:

(measured sample value)-(mean blank value) ≥ 3

x blank standard deviation

If the sample is determined to be different from the blank according to the above criteria, then the emission value of a particular POHC is blank corrected by subtracting the mean blank value (as defined in Section 12.1.3) from the measured sample value. (If an individual field blank is used as the blank value, the above criteria do not apply.)

13.1.5 If, according to the above procedures, the sample cannot be distinguished from the blank (i.e., for a given POHC there is a high sample value and high blank value or there is a low sample value and low blank value), the measured sample value is not blank corrected. In this case, the measured sample value is used to calculate a maximum emission value (and therefore a minimum DRE value) for that particular run.

13.1.6 The observation of high concentrations of POHCs of interest in blank cartridges indicates possible residual contamination of the sorbent cartridges during shipment and use at the site. Data which fall in this category (especially data indicating high concentrations of POHCs in blank sorbent cartridges) should be qualified with regard to validity, and blank data should be reported separately. The applicability of data of this type to the determination of DRE is a regulatory decision. Continued observation of high concentrations of POHCs in blank sorbent cartridges

indicates that procedures for cleanup, monitoring, shipment and storage of sorbent cartridges by a particular user, be investigated to eliminate this problem.

13.1.7 After blank corrections have been made, the amounts of individual POHCs on each sorbent cartridge used for a given run is summed and divided by the volume of gas sampled to obtain the concentration of each POHC in the stack gas.

13.1.8 If any internal standard recoveries fall outside the control limits established in Section 7.3.1, data for all analytes determined for that cartridge(s) must be qualified with the observation.

14. METHOD PERFORMANCE

14.1 The method detection limit, average recoveries and standard deviation of the average recoveries of the analytes determined using this method have not yet been established. The method performance will be documented as more data become available.

REFERENCES
(For A and B)

1) Resource Conservation and Recovery Act, Subtitle [3001-3013,42 USC 6921-6934 (1976) and Supplement IV (1980)].

2) Vogel, G., et al. "Guidance Manual for Hazardous Waste Incineration Permits," EPA-68-01-0092, SW-966, NTIS PB-84/100577, July 1982.

3) Code of Federal Regulations, Title 40, Part 60, Appendix A, 1980.

4) Harris, J. C., et al. "Sampling and Analysis Methods for Hazardous Waste Combustion," EPA 600/8-84-002, February 1984.

5) Jungclaus, G., et al. "Development of a Volatile Organic Sampling Train (VOST)," Presented at 9th Annual Research Symposium, Land Disposal, Incineration and Treatment of Hazardous Wastes, Ft. Mitchell, KY, May 2-4, 1983.

6) Federal Register, 42, 41758-41768, August 18, 1977.

7) USEPA. Quality Assurance Handbook for Air Pollution Measurement Systems, Vol. III, Office of Research and Development, Environmental Monitoring and Support Laboratory, Research Triangle Park, NC.

8) Federal Register, 44, 69464, December 3, 1979.

9) Longbottom, J. and J. Lichtenberg, eds., "Methods for Organic Chemical Analysis of Municipal and Industrial Wastewater; Test Methods," Method 624, EPA-600/4-82-057, 1982.

10) Trenholm, A. Midwest Research Institute, Personal Communication, August 5, 1983.

TECHNICAL REPORT DATA
(Please read Instructions on the reverse before completing)

1. REPORT NO. EPA-600/8-84-007	2.	3. RECIPIENT'S ACCESSION NO.
4. TITLE AND SUBTITLE Protocol for the Collection and Analyses of Volatile POHCs Using VOST		5. REPORT DATE March 1984
		6. PERFORMING ORGANIZATION CODE
7. AUTHOR(S) Earl M. Hansen		8. PERFORMING ORGANIZATION REPORT N
9. PERFORMING ORGANIZATION NAME AND ADDRESS Envirodyne Engineers, Inc. 12161 Lackland Road St. Louis, Missouri 63416		10. PROGRAM ELEMENT NO.
		11. CONTRACT/GRANT NO. 68-02-3697, Task 3
12. SPONSORING AGENCY NAME AND ADDRESS EPA, Office of Research and Development Industrial Environmental Research Laboratory Research Triangle Park, NC 27711		13. TYPE OF REPORT AND PERIOD COVERI Task Final; 4/83-2/84
		14. SPONSORING AGENCY CODE EPA/600/13

15. SUPPLEMENTARY NOTES IERL-RTP project officer is Robin M. Anderson, Mail Drop 62 919/541-7607.

16. ABSTRACT The document is a state-of-the-art operating protocol for sampling and analysis of volatile organic constituents of flue gas from hazardous waste incinerators or other similar combustor systems using the Volatile Organic Sampling Tra (VOST). It is intended to be used for guidance by personnel of the regulatory grou personnel associated with engineering research and development, and the regula community. The document is in two parts. Part A describes the key components the train, the procedures for preparing the sorbent materials, and procedures for sample collection using the VOST. Part B describes the procedures for analyzing VOST sorbent cartridges for volatile principal organic hazardous constituents (POHCs) using purge-trap-desorb gas chromatography/mass spectrometry (P-T-D GC/MS). Quality control procedures are presented in both parts.

17. KEY WORDS AND DOCUMENT ANALYSIS

a. DESCRIPTORS		b. IDENTIFIERS/OPEN ENDED TERMS	c. COSATI Field/Grou	
Pollution	Hazardous Materials	Pollution Control	13B	
Flue Gases		Stationary Sources	21B	11G
Organic Compounds	Toxicity	VOST	07C	06T
Analyzing			14B	
Sampling				
Collection			14G	

18. DISTRIBUTION STATEMENT Release to Public	19. SECURITY CLASS (This Report) Unclassified	21. NO. OF PAGES 60
	20. SECURITY CLASS (This page) Unclassified	22. PRICE

EPA Form 2220-1 (9-73)

NATIONAL INSTITUTE
FOR OCCUPATIONAL SAFETY AND HEALTH
METHOD NO. P & CAM 127

6060A

N1051+

ORGANIC SOLVENTS IN AIR

Physical and Chemical Analysis Branch

Analytical Method

Analyte:	Organic Solvents (See Table 1)	Method No:	P&CAM 127
Matrix:	Air	Range:	For the specific compound, refer to Tables I&II
Procedure:	Adsorption on charcoal desorption with carbon disulfide, GC		
Date Issued:	9/15/72	Precision:	10.5% RSD
Date Revised:	7/15/74	Classification:	See Table 1

1. Principle of the Method

   1.1 A known volume of air is drawn through a charcoal tube to trap the organic vapors present.

   1.2 The charcoal in the tube is transferred to a small, graduated test tube and desorbed with carbon disulfide.

   1.3 An aliquot of the desorbed sample is injected into a gas chromatograph.

   1.4 The area of the resulting peak is determined and compared with areas obtained from the injection of standards.

2. Range and Sensitivity

   The lower limit in mg/sample for the specific compound at 16 x 1 attenuation on a gas chromatograph fitted with a 10:1 splitter is shown in Table 1. This value can be lowered by reducing the attenuation or by eliminating the 10:1 splitter.

3. Interferences

   3.1 When the amount of water in the air is so great that condensation actually occurs in the tube, organic vapors will not be trapped. Preliminary experiments indicate that high humidity severely decreases the breakthrough volume.

   3.2 When two or more solvents are known or suspected to be present in the air, such information including their suspected identities, should be transmitted with the sample; since with differences in polarity, one may displace another from the charcoal.

3.3 It must be emphasized that any compound which has the same retention time as the specific compound under study at the operating conditions described in this method is an interference. Hence, retention time data on a single column, or even on a number of columns, cannot be considered as proof of chemical identity. For this reason it is important that a sample of the bulk solvent(s) be submitted at the same time so that identity(ies) can be established by other means.

3.4 If the possibility of interference exists, separation conditions (column packing, temperatures, etc.) must be changed to circumvent the problem.

4. Precision and Accuracy

4.1 The mean relative standard deviation of the analytical method is 8%. (Ref. 11.4).

4.2 The mean relative standard deviation of the analytical method plus field sampling using an approved personal sampling pump is 10% (Ref. 11.4). Part of the error associated with the method is related to uncertainties in the sample volume collected. If a more powerful vacuum pump with associated gas-volume integrating equipment is used, sampling precision can be improved.

4.3 The accuracy of the overall sampling and analytical method is 10% (NIOSH's unpublished data) when the personal sampling pump is calibrated with a charcoal tube in the line.

5. Advantages and Disadvantages of the Method

5.1 The sampling device is small, portable, and involves no liquids. Interferences are minimal, and most of those which do occur can be eliminated by altering chromatographic conditions. The tubes are analyzed by means of a quick, instrumental method. The method can also be used for the simultaneous analysis of two or more solvents suspected to be present in the same sample by simply changing gas chromatographic conditions from isothermal to a temperature-programmed mode of operation.

5.2 One disadvantage of the method is that the amount of sample which can be taken is limited by the number of milligrams that the tube will hold before overloading. When the sample value obtained for the backup section of the charcoal trap exceeds 25% of that found on the front section, the possibility of sample loss exists. During sample storage the more volatile compounds will migrate throughout the tube until equilibrium is reached (33% of the sample on the backup section).

5.3 Furthermore, the precision of the method is limited by the reproducibility of the pressure drop across the tubes. This drop will affect the flow rate and cause the volume to be imprecise, because the pump is usually calibrated for one tube only.

6. Apparatus

6.1 An approved and calibrated personal-sampling pump for personal samples. For an area sample any vacuum pump whose flow can be determined accurately at 1 liter per minute or less.

6.2 Charcoal tubes: glass tube with both ends flame sealed, 7 cm long with a 6-mm O.D. and a 4-mm I.D., containing 2 sections of 20/40 mesh activated charcoal separated by a 2-mm portion of urethane foam. The activated charcoal is prepared from coconut shells and is fired at 600°C prior to packing. The absorbing section contains 100 mg of charcoal, the backup section 50 mg. A 3-mm portion of urethane foam is placed between the outlet end of the tube and the backup section. A plug of silylated glass wool is placed in frontof the absorbing section. The pressure drop across the tube must be less than one inch of mercury at a flow rate of 1 lpm.

6.3 Gas chromatograph equipped with a flame ionization detector.

6.4 Column (20 ft x 1/8 in) with 10% FFAP stationary phase on 80/100 mesh, acid-washed DMCS Chromosorb W solid support. Other columns capable of performing the required separations may be used.

6.5 A mechanical or electronic integrator or a recorder and some method for determining peak area.

6.6 Glass stoppered micro tubes. The 2.5-mℓ graduated microcentrifuge tubes are recommended.

6.7 Hamilton syringes: 10 µl, and convenient sizes for making standards.

6.8 Pipets: 0.5 mℓ delivery pipets or 1.0 mℓ type graduated in 0.1 mℓ increments.

6.9 Volumetric flasks: 10 mℓ or convenient sizes for making standard solutions.

7. Reagents

7.1 Spectroquality carbon disulfide (Matheson Coleman and Bell)

7.2 Sample of the specific compound under study, preferably chromatoquality grade.

7.3 Bureau of Mines Grade A helium.

7.4 Prepurified hydrogen.

7.5 Filtered compressed air.

8. Procedure

8.1 Cleaning of Equipment. All glassware used for the laboratory analysis should be detergent washed and thoroughly rinsed with tap water and distilled water.

8.2 Calibration of Personal Pumps. Each personal pump must be calibrated with a representative charcoal tube in the line. This will minimize errors associated with uncertainties in the sample volume collected.

8.3 Collection and Shipping of Samples

8.3.1 Immediately before sampling, the ends of the tube should be broken to provide an opening at least one-half the internal diameter of the tube (2mm).

8.3.2 The smaller section of charcoal is used as a back-up and should be positioned nearest the sampling pump.

8.3.3 The charcoal tube should be vertical during sampling.

8.3.4 Air being sampled should not be passed through any hose or tubing before entering the charcoal tube.

8.3.5 The flow, time, and/or volume must be measured as accurately as possible. The sample should be taken at a flow rate of 1 lpm or less to attain the total sample volume required. The minimum and maximum sample volumes that should be collected for each solvent are shown in Table 1. The minimum volume quoted must be collected if the desired sensitivity is to be achieved.

8.3.6 The temperature and pressure of the atmosphere being sampled should be measured and recorded.

8.3.7 The charcoal tubes should be capped with the supplied plastic caps immediately after sampling. Under no circumstances should rubber caps be used.

8.3.8 One tube should be handled in the same manner as the sample tube (break, seal, and transport), except that no air is sampled through this tube. This tube should be labeled as a blank.

8.3.9 Capped tubes should be packed tightly before they are shipped to minimize tube breakage during shipping.

8.3.10 Samples of the suspected solvent(s) should be submitted to the laboratory in containers furnished by NIOSH for such purpose. These liquid bulk samples should not be transported in the same container as the samples or blank tube. If possible, a bulk air sample (at least 50ℓ air drawn through tube) should be shipped for qualitative identification purposes.

8.4 Analysis of Samples

8.4.1 Preparation of Samples. In prepration for analysis, each charcoal tube is scored with a file in front of the first section of charcoal and broken open. The glass wool is removed and discarded. The charcoal in the first (larger) section is transferred to a small stoppered test tube. The separating section of foam is removed and discarded; the second section is transferred to another test tube. These two sections are analyzed separately.

8.4.2 Desorption of Samples. Prior to analysis, one-half ml of carbon disulfide is pipetted into each test tube. (All work with carbon disulfide should be performed in a hood because of its high toxicity.) Tests indicate that desorption is complete in 30 minutes if the sample is stirred occasionally during this period. The use of graduated glass-stoppered, microcentrifuge tubes is recommended so that one can observe any apparent change in volume during the desorption process. Carbon disulfide is a very volatile solvent, so volume changes can occur during the desorption process depending on the surrounding temperature. The initial volume occupied by the charcoal plus the 0.5 mℓ CS_2 should be noted and corresponding volume adjustments should be made whenever necessary just before GC analysis.

8.4.3 GC Conditions. The typical operating conditions for the gas chromatograph are:

1. 85 cc/min. (70 psig) helium carrier gas flow.
2. 65 cc/min. (24 psig) hydrogen gas flow to detector.
3. 500 cc/min. (50 psig) air flow to detector.
4. 200°C injector temperature.

5. 200°C manifold temperature (detector)
6. Isothermal oven or column temperature - refer to Table 1 for specific compounds.

8.4.4 Injection. The first step in the analysis is the injection of the sample into the gas chromatograph. To eliminate difficulties arising from blowback or distillation within the syringe needle, one should employ the solvent flush injection technique. The 10 µℓ syringe is first flushed with solvent several times to wet the barrel and plunger. Three microliters of solvent are drawn into the syringe to increase the accuracy and reproducibility of the injected sample volume. The needle is removed from the solvent, and the plunger is pulled back about 0.2 µℓ to separate the solvent flush from the sample with a pocket of air to be used as a marker. The needle is then immersed in the sample, and a 5-µℓ aliquot is withdrawn, taking into consideration the volume of the needle, since the sample in the needle will be completely injected. After the needle is removed from the sample and prior to injection, the plunger is pulled back a short distance to minimize evaporation of the sample from the tip of the needle. Duplicate injections of each sample and standard should be made. No more than a 3% difference in area is to be expected.

8.4.5 Measurement of area. The area of the sample peak is measured by an electronic integrator or some other suitable form of area measurement, and preliminary results are read from a standard curve prepared as discussed below.

8.5 Determination of Desorption Efficiency

8.5.1 Importance of determination. The desorption efficiency of a particular compound can vary from one laboratory to another and also from one batch of charcoal to another. Thus, it is necessary to determine at least once the percentage of the specific compound that is removed in the desorption process for a given compound, provided the same batch of charcoal is used. The Physical and Chemical Analysis Branch of NIOSH has found that the desorption efficiencies for the compounds in Table 1 are between 81% and 100% and vary with each batch of charcoal.

8.5.2 Procedure for determining desorption efficiency. Activated charcoal equivalent to the amount in the first section of the sampling tube (100 mg) is measured into a 5cm, 4-mm I.D. glass tube, flame-sealed at one end (similar to commercially available culture tubes). This charcoal must be from the same batch as that used in obtaining the samples and can be obtained from unused charcoal tubes. The open end is capped

with Parafilm. A known amount of the compound is injected directly into the activated charcoal with a microliter syringe, and the tube is capped with more Parafilm. The amount injected is usually equivalent to that present in a 10-liter sample at a concentration equal to the federal standard.

At least five tubes are prepared in this manner and allowed to stand for at least overnight to assure complete abosrption of the specific compound onto the charcoal. These five tubes are referred to as the samples. A parallel blank tube should be treated in the same manner except that no sample is added to it. The sample and blank tubes are desorbed and analyzed in exactly the same manner as the sampling tube described in Section 8.3.

Two or three standards are prepared by injecting the same volume of compound into 0.5 mℓ of CS_2 with the same syringe used in the preparation of the sample. These are analyzed with the samples.

The desorption efficiency equals the difference between the average peak area of the samples and the peak area of the blank divided by the average peak area of the standards, or

$$\text{desorption efficiency} = \frac{\text{Area sample} - \text{Area blank}}{\text{Area standard}}$$

9. Calibration and Standards

It is convenient to express concentration of standards in terms of mg/0.5 mℓ CS_2 because samples are desorbed in this amount of CS_2. To minimize error due to the volatility of carbon disulfide, one can inject 20 times the weight into 10 mℓ of CS_2. For example, to prepare a 0.3 mg/0.5 mℓ standard, one would inject 6.0 mg into exactly 10 mℓ of CS_2 in a glass-stoppered flask. The density of the specific compound is used to convert 6.0 mg into microliters for easy measurement with a microliter syringe. A series of standards, varying in concentration over the range of interest, is prepared and analyzed under the same GC conditions and during the same time period as the unknown samples. Curves are established by plotting concentration in mg/0.5mℓ versus peak area.

NOTE: Since no internal standard is used in the method, standard solution must be analyzed at the same time that the sample analysis is done. This will minimize the effect of known day-to-day variations and variations during the same day of the FID response.

10. Calculations

10.1 The weight, in mg, corresponding to each peak area is read from the standard curve for the particular compound. No volume corrections are needed, because the standard curve is based on mg/0.5 mℓ CS_2 and the volume of sample injected is identical to the volume of the standards injected.

10.2 Corrections for the blank must be made for each sample.

$$\text{Correct mg} = mg_s - mg_b$$

where:

mg_s = mg found in front section of sample tube

mg_b = mg found in front section of blank tube

A similar procedure is followed for the backup sections.

10.3 The corrected amounts present in the front and backup sections of the same sample tube are added to determine the total measured amount in the sample.

10.4 This total weight is divided by the determined desorption efficiency to obtain the total mg per sample.

10.5 The volume of air sampled is converted to standard conditions of of 25°C and 760 mm Hg.

$$V_s = V \times \frac{P}{760} \quad \frac{298}{T+273}$$

where:

V_s = volume of air in liters at 25°C and 760 mm Hg

V = volume of air in liters as measured

P = Barometric pressure in mm Hg

T = Temperature of air in degree centigrade

10.6 The concentration of the organic solvent in the air sampled can be expressed in mg per m^3, which is numerically equal to µg per liter of air

$$mg/m^3 = \mu g/\ell = \frac{\text{total mg (Section 10.4)} \times 1000\ (\mu g/mg)}{V_s}$$

10.7 Another method of expressing concentration is ppm, defined as µℓ of compounds per liter of air

$$ppm = \mu\ell \text{ of compound}/V_s$$

$$ppm = \frac{\mu\ell \text{ of compound}}{V_s} \times \frac{24.45}{MW}$$

where:

24.45 = molar volume at 25°C and 760 mm Hg

MW = molecular weight of the compound (Table 1)

11. References

11.1 White, L.D., D.G. Taylor, P.A. Mauer, and R.E. Kupel, "A Convenient Optimized Method for the Analysis of Selected Solvent Vapors in the Industrial Atmosphere," *Amer. Ind. Hyg. Assoc. J.*, 31:225 (1970).

11.2 Young, D.M. and A.D. Crowell, Physical Adsorption of Gases, Butterworths, London, 1962, pp. 137-146.

11.3 Federal Register, 37 (#202), 22139-22142 (October 18, 1972).

11.4 NIOSH Contract HSM-99-72-98, Scott Research Laboratories, Inc., "Collaborative Testing of Activated Charcoal Sampling Tubes for Seven Organic Solvents," pp. 4-22, 4-27 (1973).

TABLE I

PARAMETERS ASSOCIATED WITH P&CAB ANALYTICAL METHOD NO. 127

Organic Solvent	Method Classification	Detection Limit (mg/sample)	Sample Volume (ℓ) Minimum[a]	Sample Volume (ℓ) Maximum[b]	GC Column Temperature(°C)	Molecular Weight
Acetone	D	-	0.5	7.7	60	58.1
Benzene	A	0.01	0.5	55	90	78.1
Carbon tetrachloride	A	0.20	10	60	60	154.0
Chloroform	A	0.10	0.5	13	80	119
Dichloromethane	D	0.05	0.5	3.8	85	84.9
p-Dioxane	A	0.05	1	18	100	88.1
Ethylene dichloride	D	0.05	1	12	90	99.0
Methyl ethyl ketone	B	0.01	0.5	13	80	72.1
Styrene	D	0.10	1.5	34	150	104
Tetrachloroethylene	B	0.06	1	25	130	166
1,1,2-trichloroethane	B	0.05	10	97	150	133
1,1,1-trichloroethane (Methyl Chloroform)	B	0.05	0.5	13	150	133
Trichloroethylene	A	0.05	1	17	90	131
Toluene	B	0.01	0.5	22	120	92.1
Xylene	A	0.02	0.5	31	100	106

(a) Minimum volume, in liters, required to measure 0.1 times the OSHA standard

(b) These are breakthrough volumes calculated with data derived from a potential plot (reference 11.2) for activated coconut charcoal. Concentrations of vapor in air at 5 times the OSHA standard (reference 11.3) or 500 ppm, whichever is lower, 25°C, and 760 torr were assumed. These values will be as much as 50% lower for atmospheres of high humidity. The effects of multiple contaminants have not been investigated, but it is suspected that less volatile compounds may displace more volatile compounds (See 3.1 and 3.2)

TABLE II

CHEMICALS WHICH HAVE GREATER THAN 80% DESORPTION EFFICIENCY BUT HAVE NOT BEEN THOROUGHLY TESTED BY NIOSH

Class E (Proposed)

Acrylonitrile	Isobutyl acetate
Allyl glycidyl ether	Isobutyl alcohol
n-Amyl acetate	Isoctane
2-Butoxyethanol	Isophorone
n-Butyl acetate	Isopropyl acetate
n-Butyl alcohol	Isopropyl glycidyl ether
n-Butylglycidyl ether	2,6-Lutidine
Chlorobenzene	Methyl acetate
Cyclohexane	Methyl acrylate
Cyclohexanone	Methyl n-butyl ketone
o-Dichlorobenzene	Methyl ethyl ketone
p-Dichlorobenzene	Methyl isobutyl ketone
Diethyl ether	Methyl methacrylate
N,N-Dimethyl aniline	α-Methyl styrene
Epichlorohydrin	p-Methyl styrene
2-Ethoxylethyl acetate	n-Octane
Ethyl acetate	3-Octanone
Ethylbenzene	Pentane
Ethyl butyl ketone	2-Pentanone
Fufural	α-pinene
Heptane	n-Propyl acetate
Hexane	1,1,2,2-Tetrachloroethane
Isoamyl acetate	Tetrahydrofuran
	Trichlorotrifluoroethane (Freon 113)

Recommended Sample Size = 100

STANDARD METHOD 209 G

6060A

209 G. Volatile and Fixed Matter in Nonfiltrable Residue and in Solid and Semisolid Samples

1. General Discussion

This method is applicable to the determination of total residue on evaporation and its fixed and volatile fractions in such solid and semisolid samples as river and lake sediments, sludges separated from water and wastewater treatment processes, and sludge cakes from vacuum filtration, centrifugation, or other sludge dewatering processes.

The determination of both total and volatile residue in these materials is subject to negative error due to loss of ammonium carbonate [$(NH_4)_2CO_3$] and volatile organic matter while drying. Although this is true also for wastewater, the effect tends to be more pronounced with sediments, and especially with sludges and sludge cakes.

The mass of organic matter recovered from sludge and sediment requires a longer ignition time than that specified for residue from wastewaters, effluents, or polluted waters. Carefully observe specified ignition time and temperature to control losses of volatile inorganic salts.

Make all weighings quickly because wet samples tend to lose weight by evaporation. After drying or ignition, residues often are very hygroscopic and rapidly absorb moisture from the air.

2. Apparatus

See Sections 209A.2 and 209B.2.

3. Procedure

a. Solid and semisolid samples:

1) Total residue and moisture—

a) Preparation of evaporating dish—Ignite a clean evaporating dish at 550 ± 50 C for 1 hr in a muffle furnace. Cool in a desiccator, weigh, and store in a desiccator until ready for use.

b) Fluid samples—If the sample contains enough moisture to flow more or less readily, stir to homogenize, place 25 to 50 g in a prepared evaporating dish, and weigh to the nearest 10 mg. Evaporate to dryness on a water bath, dry at 103 C for 1 hr, cool in an individual desiccator containing fresh desiccant, and weigh.

c) Solid samples—If the sample consists of discrete pieces of solid material (dewatered sludge, for example), take cores from each piece with a No. 7 cork borer or pulverize the entire sample coarsely on a clean surface by hand, using rubber gloves. Place 25 to 50 g in a prepared evaporating dish and weigh to the nearest 10 mg. Place in an oven at 103 C overnight. Cool in an individual desiccator containing fresh desiccant and weigh. Prolonged heating may result in a loss of volatile organic matter and $(NH_4)_2CO_3$, but it usually is necessary to dry samples thoroughly.

2) Volatile residue—Determine volatile residue, including organic matter and volatile inorganic salts, on the total residue

obtained in 1) above. Avoid loss of solids by decrepitation by placing dish in a cool muffle furnace, heating furnace to 550 C, and igniting for 60 min. (First ignite samples containing large amounts of organic matter over a gas burner and under an exhaust hood in the presence of adequate air to lessen losses due to reducing conditions and to avoid odors in the laboratory.) Cool in a desiccator and reweigh. Report results as fixed residue (percent ash) and volatile residue.

b. Nonfiltrable residue (suspended matter):

1) Preparation of glass-fiber filter—Place a glass-fiber filter in a membrane filter holder, Hirsch funnel, or Buchner funnel, with wrinkled surface of filter facing upward. Apply vacuum to the assembled apparatus to seat filter. With vacuum applied, wash filter with three successive 20-mL portions of distilled water. After the water has filtered through, disconnect vacuum, remove filter, transfer to an aluminum or stainless steel planchet as a support, and dry in an oven at 103 C for 1 hr (30 min in a mechanical convection oven). If volatile matter is not to be determined, cool filter in a desiccator to balance temperature and weigh. If volatile matter is to be determined, transfer filter to a muffle furnace and ignite at 550 C for 15 min. Remove filter from furnace, place in a desiccator until cooled to balance temperature, and weigh.

2) Treatment of sample—Except for samples that contain high concentrations of filtrable matter, or that filter very slowly, select a sample volume ≥14 mL/cm² filter area.

Place prepared filter in membrane filter holder, Hirsch funnel, or Buchner funnel, with wrinkled surface upward. With vacuum applied, wet filter with distilled water to seat it against holder or funnel. Measure well-mixed sample with a wide-tip pipet or graduated cylinder. Filter sample through filter using suction. Leaving suction on, wash apparatus three times with 10-mL portions of distilled water, allowing complete drainage between washings. Discontinue suction, remove filter and dry to constant weight (see 209B.3*c*) at 103 C for 1 hr in an oven (30 min in a mechanical convection oven). After drying, cool filter in a desiccator to balance temperature and weigh.

3) Filtration with Gooch crucibles—Alternatively, use glass-fiber filters of 2.2 or 2.4 cm diam with Gooch crucibles and follow the procedure in Section 209D.3*b*.

4) Ignition—Ignite filter with its nonfiltrable residue (total suspended matter) for 15 min at 550 ± 50 C, transfer to a desiccator, cool to balance temperature, and weigh.

4. Calculation

a. Solid and semisolid samples:

$$\% \text{ total residue} = \frac{A \times 100}{B}$$

$$\% \text{ volatile residue} = \frac{(A - C) \times 100}{A}$$

$$\% \text{ fixed residue} = \frac{C \times 100}{A}$$

b. Nonfiltrable residue (suspended matter):

$$\text{mg nonfiltrable volatile residue/L} = \frac{(D - E) \times 1{,}000}{\text{sample volume, mL}}$$

$$\text{mg nonfiltrable fixed residue/L} = \frac{C \times 1{,}000}{\text{sample volume, mL}}$$

where:

A = weight of dried solids, mg,
B = weight of wet sample, mg,
C = weight of ash, mg,
D = weight of residue before ignition, mg, and
E = weight of residue after ignition, mg.

5. Precision and Accuracy

See Section 209D.5.

1. Methods for Chemical Analysis of Water and Wastes 1974 U.S EPA. Technology Transfer. 625-/6-74-003. pp 266–267

2 SOKOLOFF, V.P 1933. Water of crystallization in total solids of water analysis *Ind Eng. Chem.*, Anal Ed 5.336

209 I. Bibliography

THERIAULT. E.J & H H WAGENHALS 1923 Studies of representative sewage plants *Pub Health Bull.* No 132.

HOWARD. C.S 1933. Determination of total dissolved solids in water analysis *Ind Eng Chem.*, Anal Ed 5.4

SYMONS. G.E & B MOREY 1941. The effect of drying time on the determination of solids in sewage and sewage sludges *Sewage Works J* 13·936.

FISCHER. A.J & G.E. SYMONS 1944 The determination of settleable sewage solids by weight *Water Works Sewage* 91:37.

DEGEN. J & F E. NUSSBERGER. 1956 Notes on the determination of suspended solids *Sewage Ind Wastes* 28:237

CHANIN. G., E.H. CHOW. R B ALEXANDER & J. POWERS 1958. Use of glass fiber filter medium in the suspended solids determination *Sewage Ind. Wastes* 30·1062

NUSBAUM. I 1958 New method for determination of suspended solids. *Sewage Ind Wastes* 30:1066.

SMITH. A.L & A.E GREENBERG 1963 Evaluation of methods for determining suspended solids in wastewater. *J Water Pollut. Control Fed* 35·940.

GOODMAN. B.L. 1964. Processing thickened sludge with chemical conditioners. Pages 78 et seq *in* Sludge Concentration. Filtration and Incineration Univ. Michigan Continued Education Ser. No. 113. Ann Arbor.

WYCKOFF. B.M. 1964 Rapid solids determination using glass fiber filters. *Water Sewage Works* 111:277

APPENDIX F

FIELD/ANALYTICAL DATA

PARAMETER	RUN 1	RUN 2	RUN 3	RUN 4	RUN 5	RUN 6
I. CONTROL PARAMETERS						
1. TARGET SOIL RESIDENCE TIME (MIN)	60.00	60.00	45.00	45.00	60.00	45.00
a. TARGET SCREW SPEED (SEC/REV)	128.57	128.57	96.43	96.43	128.57	96.43
2. TARGET SOIL DISCHARGE TEMP (C)	50.00	50.00	50.00	100.00	100.00	100.00
3. TARGET AIR INLET TEMP (C)	25.00	90.00	25.00	90.00	90.00	25.00
4. TARGET AIR FLOW RATE (DSCFM)	100.00	100.00	100.00	100.00	100.00	100.00
II. SOIL SYSTEM PARAMETERS						
1. TEMPERATURE						
a. FEED SOIL (C)	24.57	24.57	24.57	24.57	24.57	24.57
b. PROCESSED SOIL (C)	51.72	60.79	49.72	113.72	97.52	89.32
2. VOCs						
a. FEED SOIL						
1. DICHLORDETHYLENE-LAB (ug/kg)	550.00	63000.00	*77.00	*31.00	330000.00	210000.00
CORRESP (ug/kg)	BDL	560699.29	BDL	BDL	939856.95	529398.11
(#/HR)	BDL	1.111E-01	BDL	BDL	2.080E-01	2.026E-01
2. TRICHLORDETHYLENE-LAB (ug/kg)	*210.00	1600000.00	1400.00	*41.00	19000000.00	11000000.00
CORRESP (ug/kg)	BDL	3306351.19	24240.01	51.12	3475593.37	2907304.09
(#/HR)	BDL	6.553E-01	4.002E-03	1.588E-05	7.692E-01	1.113E+00
3. TETRACHLORDETHYLENE-LAB (ug/kg)	*32.00	1500000.00	3900.00	180.00	950000.00	*70000.00
CORRESP (ug/kg)	BDL	2907049.84	54553.76	6468.28	596447.68	50501.13
(#/HR)	BDL	5.761E-01	9.006E-03	2.009E-03	1.320E-01	1.933E-02
4. XYLENE-LAB (ug/kg)	BDL	18000.00	*66.00	BDL	320000.00	380000.00
CORRESP (ug/kg)	BDL	23483.09	36344.01	28.86	298223.84	291577.20
(#/HR)	BDL	4.654E-03	6.000E-03	8.965E-06	6.600E-02	1.116E-01
5. OTHER VOCs-LAB (ug/kg)	760.00	*6200.00	*20.00	BDL	*70000.00	*88000.00
CORRESP (ug/kg)	BDL	10091.62	BDL	56.89	144593.38	89691.54
(#/HR)	BDL	2.000E-03	BDL	1.767E-05	3.200E-02	3.433E-02
6. TOTAL VOCs-LAB (ug/kg)	1552.00	3187200.00	5463.00	252.00	20670000.00	11748000.00
CORRESP (ug/kg)	BDL	6807675.03	115137.78	6605.14	5454715.22	3868472.08
(#/HR)	BDL	1.349E+00	1.901E-02	2.052E-03	1.207E+00	1.481E+00
b. PROCESSED SOIL						
1. DICHLORDETHYLENE (ug/kg)	BDL	*670.00	BDL	BDL	BDL	*1900.00
(#/HR)	BDL	1.217E-04	BDL	BDL	BDL	6.254E-04
2. TRICHLORDETHYLENE (ug/kg)	BDL	40000.00	*13.00	*62.00	*6900.00	57000.00
(#/HR)	BDL	7.266E-03	1.761E-06	1.588E-05	1.185E-03	1.876E-02
3. TETRACHLORDETHYLENE (ug/kg)	BDL	320000.00	*46.00	*37.00	BDL	*1000.00
(#/HR)	BDL	5.813E-02	6.231E-06	9.477E-06	BDL	3.291E-04
4. XYLENE (ug/kg)	BDL	*3600.00	BDL	*35.00	BDL	*7900.00
(#/HR)	BDL	6.540E-04	BDL	8.965E-06	BDL	2.600E-03
5. OTHER VOCs (ug/kg)	BDL	BDL	BDL	*69.00	BDL	*1000.00
(#/HR)	BDL	BDL	BDL	1.767E-05	BDL	3.291E-04
6. TOTAL VOCs (ug/kg)	BDL	364270.00	59.00	203.00	6900.00	68800.00
(#/HR)	BDL	6.617E-02	7.992E-06	5.200E-05	1.185E-03	2.264E-02
c. REMOVAL EFFICIENCY						
1. DICHLORDETHYLENE (%)	-	99.89	-	-	100.00	99.69
2. TRICHLORDETHYLENE (%)	-	98.89	99.96	-	99.85	98.31
3. TETRACHLORDETHYLENE (%)	-	89.91	99.93	99.53	100.00	98.30
4. XYLENE (%)	-	85.95	100.00	-	100.00	97.67
5. OTHER VOCs (%)	-	100.00	-	-	100.00	99.04
6. MAJOR 4 CONTAMINANTS (%)	-	95.09	99.96	98.31	99.90	98.46
7. TOTAL VOCs (%)	-	95.10	99.96	97.47	99.90	98.47

PARAMETER	RUN 1	RUN 2	RUN 3	RUN 4	RUN 5	RUN 6
3. MOISTURE						
a. EXCAVATED SOIL (%)	20.60	15.50	18.20	21.00	22.10	19.30
b. FEED SOIL (%)	20.40	18.60	20.10	21.40	20.30	25.90
(#/HR)	29.59	27.89	48.17	56.24	51.51	76.35
1. ENTHALPY (BTU/#)	44.03	44.03	44.03	44.03	44.03	44.03
c. PROCESSED SOIL (%)	7.40	7.00	13.70	0.67	1.79	7.36
(#/HR)	12.13	12.65	18.56	1.72	3.07	24.20
1. ENTHALPY (BTU/#)	92.91	108.89	89.92	205.31	176.04	160.96
4. MASS FLOWRATE						
a. FEED SOIL						
1. WET BASIS (#/HR)	181.34	198.18	165.09	310.67	221.31	382.75
2. DRY BASIS (#/HR)	151.75	168.94	116.90	254.42	168.60	304.92
b. PROCESSED SOIL						
1. WET BASIS (#/HR)	163.88	181.66	135.46	256.14	171.67	329.14
2. DRY BASIS (#/HR)	151.75	168.94	116.90	254.42	168.60	304.92
5. DENSITY						
a. FEED SOIL (#/CU FT)	-	-	-	69.29	-	-
b. PROCESSED SOIL (#/CU FT)	74.96	74.82	76.18	74.65	81.39	74.23
6. ENERGY - SOIL/MOISTURE						
a. SOIL IN						
1. INERT SOIL (BTU/HR)	2313.50	2575.58	1782.19	3878.74	2570.30	4648.49
2. MOISTURE (BTU/HR)	1302.79	1228.05	2120.84	2476.28	2267.81	3361.72
b. SOIL OUT						
1. INERT SOIL (BTU/HR)	3796.74	4778.47	2840.62	12044.22	6997.99	11756.07
2. MOISTURE (BTU/HR)	1126.73	1377.46	1668.74	352.33	540.74	3895.56
. AIR SYSTEM PARAMETERS						
1. TEMPERATURE						
a. AMBIENT AIR (C)	28.00	27.00	29.00	29.00	25.00	28.00
b. HEATER EFFLUENT/PROC INLET (C)	28.00	61.00	29.00	77.00	64.00	28.00
c. INFILTRATION AIR (C)	28.00	27.00	29.00	29.00	25.00	28.00
d. MANIFOLD #1 (C)	34.00	33.00	33.00	53.00	54.00	51.00
e. MANIFOLD #2 (C)	42.00	39.00	38.00	64.00	66.00	61.00
f. MANIFOLD #3 (C)	48.00	43.00	43.00	56.00	66.00	68.00
g. AFTERBURNER INLET (C)	38.00	34.00	39.00	60.00	59.00	66.00
h. STACK	-	-	-	-	-	835.00
2. VOCs						
a. AMBIENT AIR						
1. TOTAL VOCs (ppm/vol)	BDL	BDL	BDL	BDL	BDL	BDL
(#/HR)	BDL	BDL	BDL	BDL	BDL	BDL
b. MANIFOLD #1						
1. DICHLOROETHYLENE (ppm/vol)	-	-	-	-	-	-
(#/HR)	-	-	-	-	-	-
2. TRICHLOROETHYLENE (ppm/vol)	-	-	-	-	-	-
(#/HR)	-	-	-	-	-	-
3. TETRACHLOROETHYLENE (ppm/vol)	-	-	-	-	-	-
(#/HR)	-	-	-	-	-	-
4. XYLENE (ppm/vol)	-	-	-	-	-	-
(#/HR)	-	-	-	-	-	-
5. OTHER VOCs (ppm/vol)	-	-	-	-	-	-
(#/HR)	-	-	-	-	-	-
6. TOTAL VOCs (ppm/vol)	-	-	-	-	-	-
(#/HR)	-	-	-	-	-	-

PARAMETER	RUN 1	RUN 2	RUN 3	RUN 4	RUN 5	RUN 6
c. MANIFOLD #2						
1. DICHLOROETHYLENE (ppm/vol)	-	-	-	-	-	-
(#/HR)	-	-	-	-	-	-
2. TRICHLOROETHYLENE (ppm/vol)	-	-	-	-	-	-
(#/HR)	-	-	-	-	-	-
3. TETRACHLOROETHYLENE (ppm/vol)	-	-	-	-	-	-
(#/HR)	-	-	-	-	-	-
4. XYLENE (ppm/vol)	-	-	-	-	-	-
(#/HR)	-	-	-	-	-	-
5. OTHER VOCs (ppm/vol)	-	-	-	-	-	-
(#/HR)	-	-	-	-	-	-
6. TOTAL VOCs (ppm/vol)	-	-	-	-	-	-
(#/HR)	-	-	-	-	-	-
d. MANIFOLD #3						
1. DICHLOROETHYLENE (ppm/vol)	-	-	-	-	-	-
(#/HR)	-	-	-	-	-	-
2. TRICHLOROETHYLENE (ppm/vol)	-	-	-	-	-	-
(#/HR)	-	-	-	-	-	-
3. TETRACHLOROETHYLENE (ppm/vol)	-	-	-	-	-	-
(#/HR)	-	-	-	-	-	-
4. XYLENE (ppm/vol)	-	-	-	-	-	-
(#/HR)	-	-	-	-	-	-
5. OTHER VOCs (ppm/vol)	-	-	-	-	-	-
(#/HR)	-	-	-	-	-	-
6. TOTAL VOCs (ppm/vol)	-	-	-	-	-	-
(#/HR)	-	-	-	-	-	-
e. AFTERBURNER INLET						
1. DICHLOROETHYLENE (ppm/vol)	BDL	87.00	BDL	BDL	208.00	196.00
(#/HR)	BDL	1.110E-01	BDL	BDL	2.080E-01	2.020E-01
2. TRICHLOROETHYLENE (ppm/vol)	BDL	375.00	1.70	BDL	567.00	785.00
(#/HR)	BDL	6.480E-01	4.000E-03	BDL	7.680E-01	1.094E+00
3. TETRACHLOROETHYLENE (ppm/vol)	BDL	237.00	3.00	1.10	76.70	11.00
(#/HR)	BDL	5.180E-01	9.000E-03	2.000E-03	1.320E-01	1.900E-02
4. XYLENE (ppm/vol)	BDL	3.00	3.00	BDL	60.00	97.00
(#/HR)	BDL	4.000E-03	6.000E-03	BDL	6.600E-02	1.090E-01
5. OTHER VOCs (ppm/vol)	BDL	2.00	BDL	BDL	24.70	32.80
(#/HR)	BDL	2.000E-03	BDL	BDL	3.200E-02	3.400E-02
6. TOTAL VOCs (ppm/vol)	BDL	704.00	7.70	1.10	936.40	1121.80
(#/HR)	BDL	1.283E+00	1.900E-02	2.000E-03	1.206E+00	1.458E+00
f. STACK						
1. DICHLOROETHYLENE (ppm/vol)	-	-	-	-	-	-
(#/HR)	-	-	-	-	-	-
2. TRICHLOROETHYLENE (ppm/vol)	-	-	-	-	-	-
(#/HR)	-	-	-	-	-	-
3. TETRACHLOROETHYLENE (ppm/vol)	-	-	-	-	-	-
(#/HR)	-	-	-	-	-	-
4. XYLENE (ppm/vol)	-	-	-	-	-	-
(#/HR)	-	-	-	-	-	-
5. OTHER VOCs (ppm/vol)	-	-	-	-	-	-
(#/HR)	-	-	-	-	-	-
6. TOTAL VOCs (ppm/vol)	-	-	-	-	-	-
(#/HR)	-	-	-	-	-	-

PARAMETER	RUN 1	RUN 2	RUN 3	RUN 4	RUN 5	RUN 6
3. MOISTURE						
a. PROCESS AIR (%/vol)	2.00	1.50	2.80	1.60	1.20	2.10
(#/HR)	3.00	1.10	3.40	1.40	0.77	1.60
1. ENTHALPY (BTU/#)	1097.90	1122.80	1098.80	1134.20	1124.90	1097.90
b. INFILTRATION AIR (%/vol)	2.00	1.50	2.80	1.60	1.20	2.10
(#/HR)	2.24	2.56	2.99	2.08	1.50	2.55
1. ENTHALPY (BTU/#)	1097.90	1096.60	1098.80	1098.40	1095.40	1097.90
c. MANIFOLD #1 (%/vol)	-	-	-	-	-	-
(#/HR)	-	-	-	-	-	-
d. MANIFOLD #2 (%/vol)	-	-	-	-	-	-
(#/HR)	-	-	-	-	-	-
e. MANIFOLD #3 (%/vol)	-	-	-	-	-	-
(#/HR)	-	-	-	-	-	-
f. AFTERBURNER INLET (%/vol)	8.18	7.39	14.00	21.30	21.40	22.70
(#/HR)	22.70	18.90	36.00	58.00	50.70	56.30
1. ENTHALPY (BTU/#)	1105.20	1102.60	1106.10	1122.00	1121.60	1126.10
g. STACK (%/vol)	-	-	-	-	-	30.90
(#/HR)	-	-	-	-	-	63.70
4. FLOWRATE						
a. PROCESSOR INLET (WACFM)	55.10	29.10	45.40	38.30	26.40	27.70
(DSCFM)	51.70	24.70	41.90	30.90	22.50	25.90
(#/HR)	234.00	112.00	189.00	140.00	102.00	117.00
b. INFILTRATION AIR (DSCFM)	39.10	59.90	37.00	45.50	43.90	42.40
(#/HR)	176.00	270.00	167.00	205.00	198.00	191.00
c. MANIFOLD #1 (WACFM)	-	-	-	-	-	-
(DSCFM)	-	-	-	-	-	-
(#/HR)	-	-	-	-	-	-
d. MANIFOLD #2 (WACFM)	-	-	-	-	-	-
(DSCFM)	-	-	-	-	-	-
(#/HR)	-	-	-	-	-	-
e. MANIFOLD #3 (WACFM)	-	-	-	-	-	-
(DSCFM)	-	-	-	-	-	-
(#/HR)	-	-	-	-	-	-
f. AFTERBURNER INLET (WACFM)	113.00	104.00	106.00	119.00	104.00	110.00
(DSCFM)	90.80	84.60	78.90	76.40	66.40	68.30
(#/HR)	410.00	382.00	356.00	345.00	300.00	308.00
g. STACK (WACFM)	-	-	-	-	-	283.00
(DSCFM)	-	-	-	-	-	50.80
(#/HR)	-	-	-	-	-	234.00
5. PARTICULATE EMISS-ABI/STACK (GR/WACFM)	-	-	-	-	-	-
(GR/DSCFM)	-	-	-	-	-	-
(#/HR)	-	-	-	-	-	-
6. HYDROGEN CHLORIDE EMISSIONS (#/DSCFM)	-	-	-	-	-	-
(#/HR)	-	-	-	-	-	-
7. CARBON DIOXIDE EMISSIONS (%/vol)	-	-	-	-	-	-
(#/HR)	-	-	-	-	-	-
8. OXYGEN EMISSIONS (%/vol)	-	-	-	-	-	-
(#/HR)	-	-	-	-	-	-
9. CARBON MONOXIDE EMISSIONS (%/vol)	-	-	-	-	-	-
(#/HR)	-	-	-	-	-	-

PARAMETER	RUN 1	RUN 2	RUN 3	RUN 4	RUN 5	RUN 6
10. ENERGY - AIR/MOISTURE	-	-	-	-	-	-
a. PROCESS AIR INLET (BTU/HR)	4625.66	3816.35	3817.72	5748.88	3609.46	2312.83
1. SPECIFIC HEAT (BTU/#F)	2.399E-01	2.403E-01	2.399E-01	2.407E-01	2.404E-01	2.399E-01
2. MOISTURE (BTU/HR)	3293.70	1235.08	3735.92	1587.88	866.17	1756.64
b. INFILTRATION AIR INLET (BTU/HR)	3479.13	5220.70	3373.33	4140.91	3657.52	3775.64
1. SPECIFIC HEAT (BTU/#F)	2.399E-01	2.399E-01	2.399E-01	2.399E-01	2.399E-01	2.399E-01
2. MOISTURE (BTU/HR)	2457.57	2806.04	3285.30	2279.61	1638.42	2801.10
c. AFTERBURNER INLET (BTU/HR)	9879.36	8544.58	8731.97	11606.49	9962.84	11165.71
1. SPECIFIC HEAT (BTU/#F)	2.400E-01	2.400E-01	2.400E-01	2.403E-01	2.403E-01	2.404E-01
2. MOISTURE (BTU/HR)	25088.04	20839.14	39819.60	65076.00	56865.12	63399.43
D. OIL SYSTEM PARAMETERS						
1. TEMPERATURE						
a. SCREW INLET (C)	129.05	103.30	95.98	192.84	174.09	270.32
b. SCREW OUTLET/TROUGH INLET (C)	123.20	97.74	93.33	178.99	162.93	97.30
c. TROUGH OUTLET (C)	121.11	96.59	93.33	159.07	144.81	203.75
2. PRESSURE						
a. SCREW INLET (PSIG)	28.00	32.00	26.00	20.72	26.96	22.68
b. SCREW OUTLET/TROUGH INLET (PSIG)	9.36	11.00	7.00	7.01	7.75	6.95
3. FLOWRATE (GPM)	11.00	11.70	11.00	9.00	11.20	9.80
(#/HR)	5538.16	5890.59	5538.16	4531.22	5638.85	4934.00
4. HEAT RELEASED						
a. INLET (BTU/HR)	687929.74	577707.83	498966.95	901865.94	983459.48	1509605.85
1. SPECIFIC HEAT-INLET (BTU/#F)	4.700E-01	4.500E-01	4.400E-01	5.250E-01	5.050E-01	5.900E-01
b. OUTLET (BTU/HR)	641036.89	533565.40	487343.46	713990.54	800373.46	1052576.39
1. SPECIFIC HEAT-OUTLET (BTU/#F)	4.630E-01	4.400E-01	4.400E-01	4.950E-01	4.850E-01	5.350E-01
E. PROPANE SYSTEM PARAMETERS						
1. PROPANE CONSUMPTION (SCFM)	3.78	2.36	4.17	2.66	1.86	3.08
(#/HR)	0.43	0.27	0.48	0.30	0.21	0.35
F. PROCESSOR PARAMETERS						
1. SCREW SPEED (SEC/REV)	125.63	125.50	95.20	97.70	125.00	94.00
G. HEAT LOSS (BTU/HR)	24474.33	25484.58	-23322.13	118908.65	123328.99	385469.11
1. PERCENT TOTAL HEAT (BTU/HR)	52.19	57.73	-200.65	63.29	67.36	84.34

PARAMETER	RUN 7	RUN 8	RUN 9	RUN 10	RUN 11	RUN 12
CONTROL PARAMETERS						
1. TARGET SOIL RESIDENCE TIME (MIN)	30.00	30.00	30.00	60.00	45.00	30.00
a. TARGET SCREW SPEED (SEC/REV)	64.29	64.29	64.29	128.57	96.43	64.29
2. TARGET SOIL DISCHARGE TEMP (C)	50.00	50.00	100.00	150.00	150.00	150.00
3. TARGET AIR INLET TEMP (C)	90.00	25.00	90.00	90.00	90.00	90.00
4. TARGET AIR FLOW RATE (DSCFM)	100.00	100.00	100.00	100.00	100.00	100.00
SOIL SYSTEM PARAMETERS						
1. TEMPERATURE						
a. FEED SOIL (C)	26.26	28.33	30.97	29.79	30.94	27.33
b. PROCESSED SOIL (C)	56.68	53.16	104.07	158.66	137.34	143.27
2. VOCs						
a. FEED SOIL						
1. DICHLOROETHYLENE-LAB (ug/kg)	*300.00	220000.00	470000.00	140000.00	73000.00	47000.00
CORRESP (ug/kg)	164.76	290840.89	889055.80	586105.97	264041.00	472189.12
(#/HR)	4.367E-05	7.278E-02	1.989E-01	8.538E-02	6.832E-02	6.723E-02
2. TRICHLOROETHYLENE-LAB (ug/kg)	*630.00	5900000.00	930000.00	1300000.00	760000.00	220000.00
CORRESP (ug/kg)	30402.08	1955264.05	1997441.48	2678536.44	2382812.77	2390625.98
(#/HR)	8.059E-03	4.893E-01	4.470E-01	3.902E-01	6.165E-01	3.404E-01
3. TETRACHLOROETHYLENE-LAB (ug/kg)	*410.00	930000.00	*98000.00	1500000.00	410000.00	230000.00
CORRESP (ug/kg)	82.38	699130.61	346212.67	1422031.07	727841.10	1257606.98
(#/HR)	2.184E-05	1.750E-01	7.747E-02	2.072E-01	1.883E-01	1.790E-01
4. XYLENE-LAB (ug/kg)	BDL	240000.00	*20000.00	120000.00	*49000.00	50000.00
CORRESP (ug/kg)	7544.79	85967.17	106904.95	27197366.92	65883.46	167493.06
(#/HR)	2.000E-03	2.151E-02	2.392E-02	3.962E+00	1.705E-02	2.385E-02
5. OTHER VOCs-LAB (ug/kg)	BDL	*50000.00	BDL	*22000.00	*7100.00	*11000.00
CORRESP (ug/kg)	BDL	12495.16	38923.73	39127.35	20052.88	65106.38
(#/HR)	BDL	3.127E-03	8.710E-03	5.700E-03	5.188E-03	9.269E-03
6. TOTAL VOCs-LAB (ug/kg)	1340.00	7340000.00	1518000.00	3082000.00	1299100.00	558000.00
CORRESP (ug/kg)	38194.01	3043697.89	3378538.63	31923167.75	3460631.21	4353021.51
(#/HR)	1.012E-02	7.617E-01	7.560E-01	4.651E+00	8.954E-01	6.197E-01
b. PROCESSED SOIL						
1. DICHLOROETHYLENE (ug/kg)	170.00	160000.00	15000.00	*730.00	1300.00	2000.00
(#/HR)	4.367E-05	3.878E-02	2.941E-03	8.284E-05	3.159E-04	2.256E-04
2. TRICHLOROETHYLENE (ug/kg)	230.00	880000.00	61000.00	1800.00	2100.00	12000.00
(#/HR)	5.909E-05	2.133E-01	1.196E-02	2.043E-04	5.103E-04	1.354E-03
3. TETRACHLOROETHYLENE (ug/kg)	*85.00	400000.00	33000.00	1400.00	1300.00	27000.00
(#/HR)	2.184E-05	9.696E-02	6.471E-03	1.589E-04	3.159E-04	3.046E-03
4. XYLENE (ug/kg)	BDL	64000.00	20000.00	*550.00	190.00	7500.00
(#/HR)	BDL	1.551E-02	3.922E-03	6.241E-05	4.617E-05	8.460E-04
5. OTHER VOCs (ug/kg)	BDL	*12900.00	3620.00	BDL	775.00	*1500.00
(#/HR)	BDL	3.127E-03	7.098E-04	BDL	1.883E-04	1.692E-04
6. TOTAL VOCs (ug/kg)	485.00	1516900.00	132620.00	4480.00	5665.00	50000.00
(#/HR)	1.246E-04	3.677E-01	2.601E-02	5.084E-04	1.377E-03	5.640E-03
c. REMOVAL EFFICIENCY						
1. DICHLOROETHYLENE (%)	-	46.71	98.52	99.90	99.54	99.66
2. TRICHLOROETHYLENE (%)	99.27	56.41	97.32	99.95	99.92	99.60
3. TETRACHLOROETHYLENE (%)	-	44.58	91.65	99.92	99.83	98.30
4. XYLENE (%)	100.00	27.89	83.61	100.00	99.73	96.45
5. OTHER VOCs (%)	-	-	91.85	100.00	96.37	98.17
6. MAJOR 4 CONTAMINANTS (%)	98.77	51.94	96.62	99.99	99.87	99.10
7. TOTAL VOCs (%)	98.77	51.73	96.56	99.99	99.85	99.09

PARAMETER	RUN 7	RUN 8	RUN 9	RUN 10	RUN 11	RUN 12
3. MOISTURE						
a. EXCAVATED SOIL (%)	15.30	21.60	30.90	18.70	18.30	13.30
b. FEED SOIL (%)	16.40	17.80	26.40	20.60	17.30	18.70
(#/HR)	35.14	40.50	38.27	27.63	15.57	31.21
1. ENTHALPY (BTU/#)	47.02	51.01	56.00	54.00	56.00	49.02
c. PROCESSED SOIL (%)	10.50	13.80	5.80	0.10	0.30	2.00
(#/HR)	26.98	33.08	11.35	0.11	0.73	2.25
1. ENTHALPY (BTU/#)	101.90	95.91	187.12	288.20	248.04	259.31
4. MASS FLOWRATE						
a. FEED SOIL						
1. WET BASIS (#/HR)	265.08	250.25	223.77	145.68	258.73	142.37
2. DRY BASIS (#/HR)	229.93	208.99	184.74	113.40	242.27	110.54
b. PROCESSED SOIL						
1. WET BASIS (#/HR)	256.91	242.40	196.09	113.48	243.00	112.80
2. DRY BASIS (#/HR)	229.93	208.95	184.72	113.37	242.27	110.54
5. DENSITY						
a. FEED SOIL (#/CU FT)	82.58	104.30	76.78	84.75	91.27	95.61
b. PROCESSED SOIL (#/CU FT)	78.32	74.40	62.89	68.55	-	69.37
6. ENERGY - SOIL/MOISTURE						
a. SOIL IN						
1. INERT SOIL (BTU/HR)	3645.29	3468.98	3242.00	1941.88	4249.05	1795.10
2. MOISTURE (BTU/HR)	1652.23	2066.02	2143.30	1491.97	871.68	1529.73
b. SOIL OUT						
1. INERT SOIL (BTU/HR)	6163.35	5336.05	8102.64	7200.77	13528.99	6409.03
2. MOISTURE (BTU/HR)	2748.80	3173.04	2123.29	32.56	180.48	583.54
II. AIR SYSTEM PARAMETERS						
1. TEMPERATURE						
a. AMBIENT AIR (C)	27.00	29.00	33.00	33.00	26.00	27.00
b. HEATER EFFLUENT/PROC INLET (C)	97.00	29.00	98.00	89.00	98.00	95.00
c. INFILTRATION AIR (C)	27.00	29.00	33.00	33.00	26.00	27.00
d. MANIFOLD #1 (C)	48.00	39.00	102.00	80.00	93.00	112.00
e. MANIFOLD #2 (C)	47.00	39.00	113.00	91.00	114.00	126.00
f. MANIFOLD #3 (C)	49.00	43.00	131.00	109.00	122.00	136.00
g. AFTERBURNER INLET (C)	42.00	42.00	102.00	91.00	101.00	118.00
h. STACK	968.00	1009.00	923.00	979.00	897.00	876.00
2. VOCs						
a. AMBIENT AIR						
1. TOTAL VOCs (ppm/vol)	BDL	BDL	BDL	BDL	BDL	BDL
(#/HR)	BDL	BDL	BDL	BDL	BDL	BDL
b. MANIFOLD #1						
1. DICHLOROETHYLENE (ppm/vol)	-	-	-	-	-	-
(#/HR)	-	-	-	-	-	-
2. TRICHLOROETHYLENE (ppm/vol)	-	-	-	-	-	-
(#/HR)	-	-	-	-	-	-
3. TETRACHLOROETHYLENE (ppm/vol)	-	-	-	-	-	-
(#/HR)	-	-	-	-	-	-
4. XYLENE (ppm/vol)	-	-	-	-	-	-
(#/HR)	-	-	-	-	-	-
5. OTHER VOCs (ppm/vol)	-	-	-	-	-	-
(#/HR)	-	-	-	-	-	-
6. TOTAL VOCs (ppm/vol)	-	-	-	-	-	-
(#/HR)	-	-	-	-	-	-

PARAMETER	RUN 7	RUN 8	RUN 9	RUN 10	RUN 11	RUN 12
c. MANIFOLD #2						
1. DICHLOROETHYLENE (ppm/vol)	-	-	-	-	-	-
(#/HR)	-	-	-	-	-	-
2. TRICHLOROETHYLENE (ppm/vol)	-	-	-	-	-	-
(#/HR)	-	-	-	-	-	-
3. TETRACHLOROETHYLENE (ppm/vol)	-	-	-	-	-	-
(#/HR)	-	-	-	-	-	-
4. XYLENE (ppm/vol)	-	-	-	-	-	-
(#/HR)	-	-	-	-	-	-
5. OTHER VOCs (ppm/vol)	-	-	-	-	-	-
(#/HR)	-	-	-	-	-	-
6. TOTAL VOCs (ppm/vol)	-	-	-	-	-	-
(#/HR)	-	-	-	-	-	-
d. MANIFOLD #3						
1. DICHLOROETHYLENE (ppm/vol)	-	-	-	-	-	-
(#/HR)	-	-	-	-	-	-
2. TRICHLOROETHYLENE (ppm/vol)	-	-	-	-	-	-
(#/HR)	-	-	-	-	-	-
3. TETRACHLOROETHYLENE (ppm/vol)	-	-	-	-	-	-
(#/HR)	-	-	-	-	-	-
4. XYLENE (ppm/vol)	-	-	-	-	-	-
(#/HR)	-	-	-	-	-	-
5. OTHER VOCs (ppm/vol)	-	-	-	-	-	-
(#/HR)	-	-	-	-	-	-
6. TOTAL VOCs (ppm/vol)	-	-	-	-	-	-
(#/HR)	-	-	-	-	-	-
e. AFTERBURNER INLET						
1. DICHLOROETHYLENE (ppm/vol)	BDL	24.20	173.00	75.00	54.00	63.00
(#/HR)	BDL	3.400E-02	1.960E-01	8.530E-02	6.800E-02	6.700E-02
2. TRICHLOROETHYLENE (ppm/vol)	4.40	145.00	283.00	254.00	362.00	238.00
(#/HR)	8.000E-03	2.760E-01	4.350E-01	3.900E-01	6.160E-01	3.390E-01
3. TETRACHLOROETHYLENE (ppm/vol)	BDL	32.50	36.60	106.00	87.00	97.00
(#/HR)	BDL	7.800E-02	7.100E-02	2.070E-01	1.880E-01	1.760E-01
4. XYLENE (ppm/vol)	1.50	3.60	15.80	3184.00	12.00	20.00
(#/HR)	2.000E-03	6.000E-03	2.000E-0[illegible]	3.962E+00	1.700E-02	2.300E-02
5. OTHER VOCs (ppm/vol)	BDL	BDL	7.40	4.70	3.80	8.50
(#/HR)	BDL	BDL	8.000E-03	5.700E-03	5.000E-03	9.100E-03
6. TOTAL VOCs (ppm/vol)	5.90	205.30	515.80	3623.70	518.80	426.50
(#/HR)	1.000E-02	3.940E-01	7.300E-01	4.650E+00	8.940E-01	6.141E-01
f. STACK						
1. DICHLOROETHYLENE (ppm/vol)	-	-	-	-	-	-
(#/HR)	-	-	-	-	-	-
2. TRICHLOROETHYLENE (ppm/vol)	-	-	-	-	-	-
(#/HR)	-	-	-	-	-	-
3. TETRACHLOROETHYLENE (ppm/vol)	-	-	-	-	-	-
(#/HR)	-	-	-	-	-	-
4. XYLENE (ppm/vol)	-	-	-	-	-	-
(#/HR)	-	-	-	-	-	-
5. OTHER VOCs (ppm/vol)	-	-	-	-	-	-
(#/HR)	-	-	-	-	-	-
6. TOTAL VOCs (ppm/vol)	-	BDL	BDL	BDL	-	-
(#/HR)	-	BDL	BDL	BDL	-	-

PARAMETER	RUN 7	RUN 8	RUN 9	RUN 10	RUN 11	RUN 12
3. MOISTURE						
a. PROCESS AIR (%/vol)	2.00	2.20	3.00	2.80	2.50	1.90
(#/HR)	2.50	2.60	2.80	2.90	2.20	2.00
1. ENTHALPY (BTU/#)	1148.20	1098.40	1148.90	1143.20	1148.90	1147.00
b. INFILTRATION AIR (%/vol)	2.00	2.20	3.00	2.80	2.50	1.90
(#/HR)	2.74	3.28	3.77	3.18	3.76	1.74
1. ENTHALPY (BTU/#)	1096.60	1098.40	1101.40	1101.80	1095.80	1096.60
c. MANIFOLD #1 (%/vol)	-	-	-	-	-	-
(#/HR)	-	-	-	-	-	-
d. MANIFOLD #2 (%/vol)	-	-	-	-	-	-
(#/HR)	-	-	-	-	-	-
e. MANIFOLD #3 (%/vol)	-	-	-	-	-	-
(#/HR)	-	-	-	-	-	-
f. AFTERBURNER INLET (%/vol)	4.94	4.84	13.70	13.70	11.30	14.30
(#/HR)	13.40	13.30	33.50	33.60	20.80	32.70
1. ENTHALPY (BTU/#)	1108.20	1108.20	1151.90	1144.40	1151.10	1161.90
g. STACK (%/vol)	10.10	13.70	24.80	17.60	-	-
(#/HR)	34.50	50.85	92.60	60.75	-	-
4. FLOWRATE						
a. PROCESSOR INLET (WACFM)	57.60	44.20	42.50	46.90	41.20	49.20
(DSCFM)	43.90	41.10	31.90	36.00	31.10	37.80
(#/HR)	198.00	186.00	144.00	163.00	140.00	171.00
b. INFILTRATION AIR (DSCFM)	47.80	52.00	43.50	39.40	52.30	32.10
(#/HR)	216.00	234.00	196.00	177.00	237.00	145.00
c. MANIFOLD #1 (WACFM)	-	-	-	-	-	-
(DSCFM)	-	-	-	-	-	-
(#/HR)	-	-	-	-	-	-
d. MANIFOLD #2 (WACFM)	-	-	-	-	-	-
(DSCFM)	-	-	-	-	-	-
(#/HR)	-	-	-	-	-	-
e. MANIFOLD #3 (WACFM)	-	-	-	-	-	-
(DSCFM)	-	-	-	-	-	-
(#/HR)	-	-	-	-	-	-
f. AFTERBURNER INLET (WACFM)	114.00	113.00	120.00	114.00	129.00	116.00
(DSCFM)	91.70	93.10	75.40	75.40	83.40	69.90
(#/HR)	414.00	420.00	340.00	340.00	377.00	316.00
g. STACK (WACFM)	541.00	602.00	599.00	553.00	513.00	392.00
(DSCFM)	113.00	116.00	102.00	104.00	103.00	77.60
(#/HR)	522.00	524.00	460.00	480.00	475.00	357.00
5. PARTICULATE EMISS-ABI/STACK (GR/WACFM)	-	8.000E-03	4.200E-03	6.800E-03	-	-
(GR/DSCFM)	-	4.200E-02	2.400E-02	3.600E-02	-	-
(#/HR)	-	4.100E-02	2.100E-02	3.200E-02	-	-
6. HYDROGEN CHLORIDE EMISSIONS (#/DSCFM)	-	1.080E-04	2.940E-04	2.480E-04	-	-
(#/HR)	-	7.520E-01	1.800E+00	1.550E+00	-	-
7. CARBON DIOXIDE EMISSIONS (%/vol)	-	7.00	7.40	7.70	-	-
(#/HR)	-	55.80	51.90	54.90	-	-
8. OXYGEN EMISSIONS (%/vol)	-	10.60	9.40	9.00	-	-
(#/HR)	-	61.50	48.00	46.70	-	-
9. CARBON MONOXIDE EMISSIONS (%/vol)	-	BDL	BDL	BDL	-	-
(#/HR)	-	BDL	BDL	BDL	-	-

PARAMETER	RUN 7	RUN 8	RUN 9	RUN 10	RUN 11	RUN 12
10. ENERGY - AIR/MOISTURE	-	-	-	-	-	-
a. PROCESS AIR INLET (BTU/HR)	9866.72	3757.12	7238.32	7550.19	7037.25	8369.30
1. SPECIFIC HEAT (BTU/#F)	2.412E-01	2.399E-01	2.412E-01	2.410E-01	2.412E-01	2.411E-01
2. MOISTURE (BTU/HR)	2870.50	2855.84	3216.92	3315.28	2527.58	2294.00
b. INFILTRATION AIR INLET (BTU/HR)	4176.56	4726.70	4299.46	3882.67	4480.28	2803.71
1. SPECIFIC HEAT (BTU/#F)	2.399E-01	2.399E-01	2.400E-01	2.400E-01	2.399E-01	2.399E-01
2. MOISTURE (BTU/HR)	3000.84	3604.22	4156.68	3507.95	4122.22	1912.50
c. AFTERBURNER INLET (BTU/HR)	10691.14	10846.08	17688.26	16043.85	19449.41	18658.86
1. SPECIFIC HEAT (BTU/#F)	2.400E-01	2.400E-01	2.413E-01	2.410E-01	2.413E-01	2.416E-01
2. MOISTURE (BTU/HR)	14849.88	14739.06	38588.65	38451.84	23942.88	37994.13
. OIL SYSTEM PARAMETERS						
1. TEMPERATURE						
a. SCREW INLET (C)	85.40	87.78	252.08	248.01	262.08	292.52
b. SCREW OUTLET/TROUGH INLET (C)	82.16	79.44	242.09	237.80	251.32	281.59
c. TROUGH OUTLET (C)	82.16	79.44	239.79	236.85	242.99	269.63
2. PRESSURE						
a. SCREW INLET (PSIG)	23.17	23.00	24.85	29.80	21.63	24.11
b. SCREW OUTLET/TROUGH INLET (PSIG)	7.08	7.50	7.13	8.72	6.88	7.21
3. FLOWRATE (GPM)	10.00	9.80	10.50	11.70	9.60	10.40
(#/HR)	5034.69	4934.00	5286.42	5890.59	4833.30	5236.08
4. HEAT RELEASED						
a. INLET (BTU/HR)	402068.33	407803.69	1476511.91	1606353.64	1424326.34	1783968.90
1. SPECIFIC HEAT-INLET (BTU/#F)	4.300E-01	4.350E-01	5.750E-01	5.700E-01	5.850E-01	6.100E-01
b. OUTLET (BTU/HR)	393970.94	368676.30	1384758.85	1511907.10	1281795.17	1598193.30
1. SPECIFIC HEAT-OUTLET (BTU/#F)	4.350E-01	4.270E-01	5.650E-01	5.600E-01	5.650E-01	5.900E-01
. PROPANE SYSTEM PARAMETERS						
1. PROPANE CONSUMPTION (SCFM)	2.38	2.64	2.33	2.13	1.86	2.14
(#/HR)	0.27	0.30	0.27	0.24	0.21	0.24
. PROCESSOR PARAMETERS						
1. SCREW SPEED (SEC/REV)	64.27	63.65	62.77	126.77	93.58	62.00
. HEAT LOSS (BTU/HR)	-1143.62	25512.03	49546.90	54407.47	108717.46	140834.38
1. PERCENT TOTAL HEAT (BTU/HR)	-14.12	65.20	54.00	57.61	76.28	75.81

PARAMETER	RUN 13	RUN 14	RUN 15	RUN 16	RUN 17	RUN 18
A. CONTROL PARAMETERS						
1. TARGET SOIL RESIDENCE TIME (MIN)	60.00	45.00	30.00	30.00	60.00	45.00
a. TARGET SCREW SPEED (SEC/REV)	128.57	96.43	64.29	64.29	128.57	96.43
2. TARGET SOIL DISCHARGE TEMP (C)	150.00	150.00	150.00	100.00	100.00	50.00
3. TARGET AIR INLET TEMP (C)	25.00	25.00	25.00	25.00	25.00	90.00
4. TARGET AIR FLOW RATE (DSCFM)	100.00	100.00	100.00	100.00	100.00	100.00
B. SOIL SYSTEM PARAMETERS						
1. TEMPERATURE						
a. FEED SOIL (C)	24.46	22.88	23.83	22.62	20.20	23.23
b. PROCESSED SOIL (C)	175.27	175.33	140.30	95.36	120.88	66.32
2. VOCs						
a. FEED SOIL						
1. DICHLOROETHYLENE-LAB (ug/kg)	47000.00	80000.00	320000.00	210000.00	*7700.00	*2400.00
CORRESP (ug/kg)	246562.84	410532.23	844625.87	478912.60	204941.19	9707.75
($/HR)	4.408E-02	7.512E-02	1.532E-01	1.160E-01	2.900E-02	2.079E-03
2. TRICHLOROETHYLENE-LAB (ug/kg)	55000.00	*28000.00	1800000.00	150000.00	BDL	*1000.00
CORRESP (ug/kg)	347305.04	1945782.47	2652701.06	2126206.80	1264981.81	3287.79
($/HR)	6.209E-02	3.560E-01	4.810E-01	5.150E-01	1.790E-01	7.041E-04
3. TETRACHLOROETHYLENE-LAB (ug/kg)	61000.00	61000.00	2500000.00	1500000.00	210000.00	*3300.00
CORRESP (ug/kg)	117507.75	125699.33	1369205.30	1354166.66	1512324.63	9407.88
($/HR)	2.101E-02	2.300E-02	2.483E-01	3.280E-01	2.140E-01	2.015E-03
4. XYLENE-LAB (ug/kg)	23000.00	59000.00	180000.00	73000.00	BDL	BDL
CORRESP (ug/kg)	33604.67	98407.63	187200.23	77836.55	14142.02	4933.02
($/HR)	6.008E-03	1.801E-02	3.395E-02	1.885E-02	2.001E-03	1.057E-03
5. OTHER VOCs-LAB (ug/kg)	*5420.00	*10000.00	*13200.00	*50000.00	*4100.00	BDL
CORRESP (ug/kg)	12239.24	22702.63	45181.64	20642.78	BDL	9598.71
($/HR)	2.188E-03	4.154E-03	8.193E-03	5.000E-03	BDL	2.056E-03
6. TOTAL VOCs-LAB (ug/kg)	191420.00	238000.00	4813200.00	1983000.00	221800.00	6700.00
CORRESP (ug/kg)	757219.53	2603124.30	5098914.11	4057765.39	2996389.65	36935.14
($/HR)	1.354E-01	4.763E-01	9.246E-01	9.829E-01	4.240E-01	7.910E-03
b. PROCESSED SOIL						
1. DICHLOROETHYLENE (ug/kg)	510.00	770.00	1100.00	BDL	BDL	420.00
($/HR)	8.182E-05	1.177E-04	1.627E-04	BDL	BDL	7.910E-05
2. TRICHLOROETHYLENE (ug/kg)	580.00	210.00	7000.00	BDL	BDL	*22.00
($/HR)	9.306E-05	3.209E-05	1.035E-03	BDL	BDL	4.143E-06
3. TETRACHLOROETHYLENE (ug/kg)	*54.00	BDL	29000.00	BDL	BDL	*79.00
($/HR)	8.664E-06	BDL	4.289E-03	BDL	BDL	1.488E-05
4. XYLENE (ug/kg)	50.00	*41.00	6400.00	4100.00	*10.00	300.00
($/HR)	8.022E-06	6.266E-06	9.465E-04	8.532E-04	1.153E-06	5.650E-05
5. OTHER VOCs (ug/kg)	1173.00	1008.00	1306.00	BDL	BDL	296.00
($/HR)	1.882E-04	1.540E-04	1.931E-04	BDL	BDL	5.575E-05
6. TOTAL VOCs (ug/kg)	2367.00	2029.00	44806.00	4100.00	10.00	1117.00
($/HR)	3.798E-04	3.101E-04	6.626E-03	8.532E-04	1.153E-06	2.104E-04
c. REMOVAL EFFICIENCY						
1. DICHLOROETHYLENE (%)	99.81	99.84	99.89	100.00	100.00	96.20
2. TRICHLOROETHYLENE (%)	99.85	99.99	99.78	100.00	100.00	99.41
3. TETRACHLOROETHYLENE (%)	99.96	100.00	98.27	100.00	100.00	99.26
4. XYLENE (%)	99.87	99.97	97.21	95.47	99.94	94.65
5. OTHER VOCs (%)	91.40	96.29	97.64	100.00	-	97.29
6. MAJOR 4 CONTAMINANTS (%)	99.86	99.97	99.30	99.91	100.00	97.36
7. TOTAL VOCs (%)	99.72	99.93	99.28	99.91	100.00	97.34

PARAMETER	RUN 13	RUN 14	RUN 15	RUN 16	RUN 17	RUN 18
3. MOISTURE						
a. EXCAVATED SOIL (%)	17.40	15.20	16.60	15.20	15.20	18.30
b. FEED SOIL (%)	15.50	16.70	20.60	17.70	13.80	19.60
(#/HR)	18.37	29.83	34.00	42.29	26.17	32.41
1. ENTHALPY (BTU/#)	44.03	41.03	43.03	41.03	36.04	42.03
c. PROCESSED SOIL (%)	0.10	0.10	1.00	4.40	0.30	3.50
(#/HR)	0.16	0.15	1.47	9.16	0.35	6.59
1. ENTHALPY (BTU/#)	318.48	319.53	254.18	172.02	218.48	118.89
4. MASS FLOWRATE						
a. FEED SOIL						
1. WET BASIS (#/HR)	178.79	182.98	181.34	242.22	141.50	214.17
2. DRY BASIS (#/HR)	160.28	152.67	146.41	198.94	114.91	181.75
b. PROCESSED SOIL						
1. WET BASIS (#/HR)	160.44	152.82	147.89	208.10	115.26	188.34
2. DRY BASIS (#/HR)	160.28	152.67	146.41	198.94	114.91	181.75
5. DENSITY						
a. FEED SOIL (#/CU FT)	95.62	90.34	109.38	87.79	91.85	88.16
b. PROCESSED SOIL (#/CU FT)	72.53	74.20	72.06	69.06	75.54	74.91
6. ENERGY - SOIL/MOISTURE						
a. SOIL IN						
1. INERT SOIL (BTU/HR)	2437.15	2234.56	2193.06	2893.28	1571.11	2683.11
2. MOISTURE (BTU/HR)	808.85	1224.04	1463.11	1735.11	943.02	1362.33
b. SOIL OUT						
1. INERT SOIL (BTU/HR)	11138.98	10613.24	8331.96	8102.89	5736.15	5502.46
2. MOISTURE (BTU/HR)	50.98	48.73	374.22	1574.94	75.53	783.69
. AIR SYSTEM PARAMETERS						
1. TEMPERATURE						
a. AMBIENT AIR (C)	26.00	25.00	24.00	23.00	23.00	27.00
b. HEATER EFFLUENT/PROC INLET (C)	26.00	25.00	24.00	23.00	23.00	99.00
c. INFILTRATION AIR (C)	26.00	25.00	24.00	23.00	23.00	27.00
d. MANIFOLD #1 (C)	73.00	63.00	91.00	71.00	61.00	57.00
e. MANIFOLD #2 (C)	88.00	84.00	111.00	90.00	75.00	62.00
f. MANIFOLD #3 (C)	107.00	122.00	139.00	112.00	98.00	72.00
g. AFTERBURNER INLET (C)	87.00	84.00	97.00	81.00	76.00	62.00
h. STACK	886.00	886.00	908.00	883.00	918.00	919.00
2. VOCs						
a. AMBIENT AIR						
1. TOTAL VOCs (ppm/vol)	BDL	BDL	BDL	BDL	BDL	BDL
(#/HR)	BDL	BDL	BDL	BDL	BDL	BDL
b. MANIFOLD #1						
1. DICHLOROETHYLENE (ppm/vol)	-	-	-	-	-	-
(#/HR)	-	-	-	-	-	-
2. TRICHLOROETHYLENE (ppm/vol)	-	-	-	-	-	-
(#/HR)	-	-	-	-	-	-
3. TETRACHLOROETHYLENE (ppm/vol)	-	-	-	-	-	-
(#/HR)	-	-	-	-	-	-
4. XYLENE (ppm/vol)	-	-	-	-	-	-
(#/HR)	-	-	-	-	-	-
5. OTHER VOCs (ppm/vol)	-	-	-	-	-	-
(#/HR)	-	-	-	-	-	-
6. TOTAL VOCs (ppm/vol)	-	-	-	-	-	-
(#/HR)	-	-	-	-	-	-

PARAMETER	RUN 13	RUN 14	RUN 15	RUN 16	RUN 17	RUN 18
c. MANIFOLD #2						
1. DICHLOROETHYLENE (ppm/vol)	-	-	-	-	-	-
(#/HR)	-	-	-	-	-	-
2. TRICHLOROETHYLENE (ppm/vol)	-	-	-	-	-	-
(#/HR)	-	-	-	-	-	-
3. TETRACHLOROETHYLENE (ppm/vol)	-	-	-	-	-	-
(#/HR)	-	-	-	-	-	-
4. XYLENE (ppm/vol)	-	-	-	-	-	-
(#/HR)	-	-	-	-	-	-
5. OTHER VOCs (ppm/vol)	-	-	-	-	-	-
(#/HR)	-	-	-	-	-	-
6. TOTAL VOCs (ppm/vol)	-	-	-	-	-	-
(#/HR)	-	-	-	-	-	-
d. MANIFOLD #3						
1. DICHLOROETHYLENE (ppm/vol)	-	-	-	-	-	-
(#/HR)	-	-	-	-	-	-
2. TRICHLOROETHYLENE (ppm/vol)	-	-	-	-	-	-
(#/HR)	-	-	-	-	-	-
3. TETRACHLOROETHYLENE (ppm/vol)	-	-	-	-	-	-
(#/HR)	-	-	-	-	-	-
4. XYLENE (ppm/vol)	-	-	-	-	-	-
(#/HR)	-	-	-	-	-	-
5. OTHER VOCs (ppm/vol)	-	-	-	-	-	-
(#/HR)	-	-	-	-	-	-
6. TOTAL VOCs (ppm/vol)	-	-	-	-	-	-
(#/HR)	-	-	-	-	-	-
e. AFTERBURNER INLET						
1. DICHLOROETHYLENE (ppm/vol)	35.00	52.00	121.00	82.00	20.00	1.70
(#/HR)	4.400E-02	7.500E-02	1.530E-01	1.160E-01	2.900E-02	2.000E-03
2. TRICHLOROETHYLENE (ppm/vol)	37.00	183.00	281.00	270.00	90.00	0.40
(#/HR)	6.200E-02	3.560E-01	4.800E-01	5.150E-01	1.790E-01	7.000E-04
3. TETRACHLOROETHYLENE (ppm/vol)	9.80	9.20	112.00	136.00	85.00	1.00
(#/HR)	2.100E-02	2.300E-02	2.440E-01	3.280E-01	2.140E-01	2.000E-03
4. XYLENE (ppm/vol)	4.20	11.00	24.00	11.00	1.10	1.00
(#/HR)	6.000E-03	1.800E-02	3.300E-02	1.800E-02	2.000E-03	1.000E-03
5. OTHER VOCs (ppm/vol)	1.60	2.80	6.00	3.60	BDL	1.20
(#/HR)	2.000E-03	4.000E-03	8.000E-03	5.000E-03	BDL	2.000E-03
6. TOTAL VOCs (ppm/vol)	87.60	258.00	544.00	502.60	196.10	5.30
(#/HR)	1.350E-01	4.760E-01	9.180E-01	9.820E-01	4.240E-01	7.700E-03
f. STACK						
1. DICHLOROETHYLENE (ppm/vol)	-	-	-	-	-	-
(#/HR)	-	-	-	-	-	-
2. TRICHLOROETHYLENE (ppm/vol)	-	-	-	-	-	-
(#/HR)	-	-	-	-	-	-
3. TETRACHLOROETHYLENE (ppm/vol)	-	-	-	-	-	-
(#/HR)	-	-	-	-	-	-
4. XYLENE (ppm/vol)	-	-	-	-	-	-
(#/HR)	-	-	-	-	-	-
5. OTHER VOCs (ppm/vol)	-	-	-	-	-	-
(#/HR)	-	-	-	-	-	-
6. TOTAL VOCs (ppm/vol)	-	-	-	-	-	-
(#/HR)	-	-	-	-	-	-

PARAMETER	RUN 13	RUN 14	RUN 15	RUN 16	RUN 17	RUN 18
3. MOISTURE						
a. PROCESS AIR (%/vol)	2.30	2.00	2.00	1.60	2.00	2.30
(#/HR)	3.00	2.50	2.40	2.10	2.50	3.10
1. ENTHALPY (BTU/#)	1096.20	1095.40	1094.90	1093.60	1094.10	1149.70
b. INFILTRATION AIR (%/vol)	2.30	2.00	2.00	1.60	2.00	2.30
(#/HR)	2.49	2.92	2.37	2.17	3.08	2.98
1. ENTHALPY (BTU/#)	1096.20	1095.40	1094.90	1093.60	1094.10	1096.60
c. MANIFOLD #1 (%/vol)	-	-	-	-	-	-
(#/HR)	-	-	-	-	-	-
d. MANIFOLD #2 (%/vol)	-	-	-	-	-	-
(#/HR)	-	-	-	-	-	-
e. MANIFOLD #3 (%/vol)	-	-	-	-	-	-
(#/HR)	-	-	-	-	-	-
f. AFTERBURNER INLET (%/vol)	9.28	11.60	13.70	12.50	10.30	11.00
(#/HR)	23.70	35.10	37.30	37.40	31.40	31.90
1. ENTHALPY (BTU/#)	1141.70	1139.70	1148.20	1137.40	1133.40	1123.60
g. STACK (%/vol)	-	-	-	-	-	-
(#/HR)	-	-	-	-	-	-
4. FLOWRATE						
a. PROCESSOR INLET (WACFM)	48.10	47.00	44.90	47.90	46.00	62.20
(DSCFM)	45.00	44.30	42.40	45.90	43.70	46.90
(#/HR)	203.00	200.00	192.00	207.00	197.00	212.00
b. INFILTRATION AIR (DSCFM)	37.70	51.00	41.40	47.50	53.80	45.10
(#/HR)	170.00	230.00	186.00	215.00	243.00	203.00
c. MANIFOLD #1 (WACFM)	-	-	-	-	-	-
(DSCFM)	-	-	-	-	-	-
(#/HR)	-	-	-	-	-	-
d. MANIFOLD #2 (WACFM)	-	-	-	-	-	-
(DSCFM)	-	-	-	-	-	-
(#/HR)	-	-	-	-	-	-
e. MANIFOLD #3 (WACFM)	-	-	-	-	-	-
(DSCFM)	-	-	-	-	-	-
(#/HR)	-	-	-	-	-	-
f. AFTERBURNER INLET (WACFM)	120.00	141.00	131.00	138.00	139.00	127.00
(DSCFM)	82.70	95.30	83.80	93.40	97.50	92.00
(#/HR)	373.00	430.00	378.00	422.00	440.00	415.00
g. STACK (WACFM)	507.00	510.00	472.00	484.00	561.00	629.00
(DSCFM)	106.00	103.00	90.90	96.70	113.00	125.00
(#/HR)	486.00	472.00	418.00	445.00	518.00	574.00
5. PARTICULATE EMISS-ABI/STACK (GR/WACFM)	-	-	-	-	-	-
(GR/DSCFM)	-	-	-	-	-	-
(#/HR)	-	-	-	-	-	-
6. HYDROGEN CHLORIDE EMISSIONS (#/DSCFM)	-	-	-	-	-	-
(#/HR)	-	-	-	-	-	-
7. CARBON DIOXIDE EMISSIONS (%/vol)	-	-	-	-	-	-
(#/HR)	-	-	-	-	-	-
8. OXYGEN EMISSIONS (%/vol)	-	-	-	-	-	-
(#/HR)	-	-	-	-	-	-
9. CARBON MONOXIDE EMISSIONS (%/vol)	-	-	-	-	-	-
(#/HR)	-	-	-	-	-	-

PARAMETER	RUN 13	RUN 14	RUN 15	RUN 16	RUN 17	RUN 18
10. ENERGY - AIR/MOISTURE	-	-	-	-	-	-
a. PROCESS AIR INLET (BTU/HR)	3837.54	3694.46	3462.33	3643.47	3467.46	10748.45
1. SPECIFIC HEAT (BTU/#F)	2.399E-01	2.399E-01	2.398E-01	2.398E-01	2.398E-01	2.412E-01
2. MOISTURE (BTU/HR)	3288.60	2738.50	2627.76	2296.56	2735.25	3564.07
b. INFILTRATION AIR INLET (BTU/HR)	3213.70	4248.63	3354.13	3784.28	4277.12	3925.20
1. SPECIFIC HEAT (BTU/#F)	2.399E-01	2.399E-01	2.398E-01	2.398E-01	2.398E-01	2.399E-01
2. MOISTURE (BTU/HR)	2729.15	3198.23	2595.03	2369.41	3369.82	3266.04
c. AFTERBURNER INLET (BTU/HR)	16946.79	18977.14	18836.47	18067.61	17877.27	14320.44
1. SPECIFIC HEAT (BTU/#F)	2.409E-01	2.409E-01	2.412E-01	2.408E-01	2.407E-01	2.403E-01
2. MOISTURE (BTU/HR)	27058.29	40003.47	42827.86	42538.76	35588.76	35842.84
D. OIL SYSTEM PARAMETERS						
1. TEMPERATURE						
a. SCREW INLET (C)	235.45	257.18	301.29	219.06	205.98	144.33
b. SCREW OUTLET/TROUGH INLET (C)	226.84	243.76	286.05	210.86	197.13	138.77
c. TROUGH OUTLET (C)	226.84	231.29	265.74	206.14	190.92	138.51
2. PRESSURE						
a. SCREW INLET (PSIG)	19.59	21.17	18.08	32.63	23.68	21.79
b. SCREW OUTLET/TROUGH INLET (PSIG)	7.50	7.83	7.76	7.96	10.57	7.20
3. FLOWRATE (GPM)	8.40	9.00	7.50	12.90	8.90	9.40
(#/HR)	4229.14	4531.22	3776.02	6494.75	4480.87	4732.61
4. HEAT RELEASED						
a. INLET (BTU/HR)	1079503.21	1300713.53	1333720.59	1508976.32	965532.22	662854.66
1. SPECIFIC HEAT-INLET (BTU/#F)	5.600E-01	5.800E-01	6.150E-01	5.450E-01	5.350E-01	4.800E-01
b. OUTLET (BTU/HR)	1024177.60	1137609.54	1127308.95	1400481.26	875298.16	632399.98
1. SPECIFIC HEAT-OUTLET (BTU/#F)	5.500E-01	5.600E-01	5.850E-01	5.350E-01	5.200E-01	4.750E-01
E. PROPANE SYSTEM PARAMETERS						
1. PROPANE CONSUMPTION (SCFM)	2.21	2.21	2.04	2.47	2.42	2.76
(#/HR)	0.25	0.25	0.23	0.28	0.28	0.32
F. PROCESSOR PARAMETERS						
1. SCREW SPEED (SEC/REV)	129.00	96.00	62.93	64.65	131.23	99.33
G. HEAT LOSS (BTU/HR)	16445.56	110799.82	151736.55	54932.98	47320.10	-445.55
1. PERCENT TOTAL HEAT (BTU/HR)	29.73	67.93	73.51	50.63	52.44	-1.46

PARAMETER	RUN 19	RUN 20	RUN 21	RUN 22	RUN 23	RUN 24
. CONTROL PARAMETERS						
1. TARGET SOIL RESIDENCE TIME (MIN)	60.00	90.00	75.00	60.00	90.00	60.00
a. TARGET SCREW SPEED (SEC/REV)	128.57	192.86	160.71	128.57	192.86	128.57
2. TARGET SOIL DISCHARGE TEMP (C)	210.00	210.00	210.00	150.00	150.00	50.00
3. TARGET AIR INLET TEMP (C)	90.00	90.00	90.00	90.00	90.00	25.00
4. TARGET AIR FLOW RATE (DSCFM)	100.00	100.00	100.00	100.00	100.00	100.00
. SOIL SYSTEM PARAMETERS						
1. TEMPERATURE						
a. FEED SOIL (C)	25.67	25.93	25.19	31.08	28.65	20.22
b. PROCESSED SOIL (C)	223.85	218.07	232.67	140.96	149.96	59.97
2. VOCs						
a. FEED SOIL						
1. DICHLOROETHYLENE-LAB (ug/kg)	*750.00	*740.00	*20.00	BDL	BDL	22000.00
CORRESP (ug/kg)	2795.49	2591.15	BDL	BDL	8.64	22000.00
(#/HR)	6.472E-04	4.000E-04	BDL	BDL	9.706E-07	3.182E-03
2. TRICHLOROETHYLENE-LAB (ug/kg)	BDL	BDL	*70.00	BDL	BDL	180000.00
CORRESP (ug/kg)	2560.31	1301.54	9.47	170.46	138.28	180000.00
(#/HR)	5.928E-04	2.009E-04	1.850E-06	2.829E-05	1.553E-05	2.603E-02
3. TETRACHLOROETHYLENE-LAB (ug/kg)	BDL	*400.00	*30.00	BDL	BDL	140000.00
CORRESP (ug/kg)	127.44	BDL	BDL	22.16	13.83	140000.00
(#/HR)	2.950E-05	BDL	BDL	3.677E-06	1.553E-06	2.025E-02
4. XYLENE-LAB (ug/kg)	3300.00	13000.00	160.00	34000.00	1500.00	18000.00
CORRESP (ug/kg)	10869.69	12976.19	11808.47	40418.83	57999.59	18000.00
(#/HR)	2.517E-03	2.003E-03	2.306E-03	6.707E-03	6.514E-03	2.603E-03
5. OTHER VOCs-LAB (ug/kg)	*530.00	*2360.00	*15.00	5600.00	380.00	5520.00
CORRESP (ug/kg)	7189.73	17939.50	19682.16	21719.74	33292.60	5520.00
(#/HR)	1.665E-03	2.769E-03	3.843E-03	3.604E-03	3.739E-03	7.984E-04
6. TOTAL VOCs-LAB (ug/kg)	4580.00	16500.00	295.00	39600.00	1880.00	365520.00
CORRESP (ug/kg)	23542.66	34808.38	31500.10	62331.19	91452.94	365520.00
(#/HR)	5.451E-03	5.373E-03	6.150E-03	1.034E-02	1.027E-02	5.287E-02
b. PROCESSED SOIL						
1. DICHLOROETHYLENE (ug/kg)	240.00	BDL	BDL	BDL	*10.00	890.00
(#/HR)	4.721E-05	BDL	BDL	BDL	9.706E-07	1.128E-04
2. TRICHLOROETHYLENE (ug/kg)	980.00	7.00	*12.00	200.00	160.00	5000.00
(#/HR)	1.928E-04	9.212E-07	1.850E-06	2.829E-05	1.553E-05	6.338E-04
3. TETRACHLOROETHYLENE (ug/kg)	150.00	BDL	BDL	*26.00	*16.00	1300.00
(#/HR)	2.950E-05	BDL	BDL	3.677E-06	1.553E-06	1.648E-04
4. XYLENE (ug/kg)	84.00	*24.00	*36.00	51.00	140.00	130.00
(#/HR)	1.652E-05	3.158E-06	5.549E-06	7.213E-06	1.359E-05	1.648E-05
5. OTHER VOCs (ug/kg)	1345.00	527.00	278.00	737.00	1431.00	95.00
(#/HR)	2.645E-04	6.935E-05	4.285E-05	1.042E-04	1.389E-04	1.204E-05
6. TOTAL VOCs (ug/kg)	2799.00	558.00	326.00	1014.00	1757.00	7415.00
(#/HR)	5.505E-04	7.343E-05	5.025E-05	1.434E-04	1.705E-04	9.399E-04
c. REMOVAL EFFICIENCY						
1. DICHLOROETHYLENE (%)	92.71	100.00	-	-	0.00	96.45
2. TRICHLOROETHYLENE (%)	67.48	99.54	-	-	0.00	97.57
3. TETRACHLOROETHYLENE (%)	-	-	-	-	0.00	99.19
4. XYLENE (%)	99.34	99.84	99.76	99.89	99.79	99.37
5. OTHER VOCs (%)	84.11	97.50	98.88	97.11	96.29	98.49
6. MAJOR 4 CONTAMINANTS (%)	92.45	99.84	99.68	99.42	99.52	98.22
7. TOTAL VOCs (%)	89.90	98.63	99.18	98.61	98.34	98.22

PARAMETER	RUN 19	RUN 20	RUN 21	RUN 22	RUN 23	RUN 24
3. MOISTURE						
a. EXCAVATED SOIL (%)	16.20	16.20	19.40	15.60	15.60	21.00
b. FEED SOIL (%)	15.40	17.10	17.50	15.80	15.00	20.60
(#/HR)	36.40	22.90	42.49	24.64	16.01	22.77
1. ENTHALPY (BTU/#)	46.02	47.02	45.02	56.00	52.01	36.04
c. PROCESSED SOIL (%)	0.80	0.10	0.90	0.10	0.80	3.90
(#/HR)	1.57	0.13	1.39	0.14	0.78	4.94
1. ENTHALPY (BTU/#)	413.34	402.27	431.22	255.20	271.66	107.89
4. MASS FLOWRATE						
a. FEED SOIL						
1. WET BASIS (#/HR)	231.52	154.37	195.25	165.94	112.30	144.63
2. DRY BASIS (#/HR)	195.12	131.47	152.75	141.29	96.28	121.81
b. PROCESSED SOIL						
1. WET BASIS (#/HR)	196.69	131.60	154.14	141.43	97.06	126.75
2. DRY BASIS (#/HR)	195.12	131.47	152.75	141.29	96.28	121.81
5. DENSITY						
a. FEED SOIL (#/CU FT)	91.27	95.61	110.83	82.57	86.92	86.92
b. PROCESSED SOIL (#/CU FT)	76.83	82.16	82.49	78.23	83.14	74.94
6. ENERGY - SOIL/MOISTURE						
a. SOIL IN						
1. INERT SOIL (BTU/HR)	3051.86	2068.63	2362.84	2485.10	1609.28	1666.22
2. MOISTURE (BTU/HR)	1674.92	1076.67	1912.74	1380.06	832.69	820.69
b. SOIL OUT						
1. INERT SOIL (BTU/HR)	16972.40	11162.35	13772.37	8074.02	5814.14	3409.27
2. MOISTURE (BTU/HR)	650.17	52.91	598.19	36.06	210.89	533.23
C. AIR SYSTEM PARAMETERS						
1. TEMPERATURE						
a. AMBIENT AIR (C)	27.00	28.00	29.00	32.00	33.00	19.00
b. HEATER EFFLUENT/PROC INLET (C)	96.00	96.00	98.00	96.00	98.00	19.00
c. INFILTRATION AIR (C)	27.00	28.00	29.00	32.00	33.00	19.00
d. MANIFOLD #1 (C)	93.00	91.00	86.00	68.00	74.00	39.00
e. MANIFOLD #2 (C)	124.00	132.00	126.00	91.00	98.00	57.00
f. MANIFOLD #3 (C)	163.00	168.00	162.00	105.00	104.00	69.00
g. AFTERBURNER INLET (C)	112.00	109.00	117.00	76.00	78.00	44.00
h. STACK	923.00	908.00	907.00	926.00	916.00	889.00
2. VOCs						
a. AMBIENT AIR						
1. TOTAL VOCs (ppm/vol)	BDL	BDL	BDL	BDL	BDL	BDL
(#/HR)	BDL	BDL	BDL	BDL	BDL	BDL
b. MANIFOLD #1						
1. DICHLOROETHYLENE (ppm/vol)	0.50	0.40	BDL	BDL	BDL	-
(#/HR)	2.000E-04	2.000E-04	BDL	BDL	BDL	-
2. TRICHLOROETHYLENE (ppm/vol)	BDL	BDL	BDL	BDL	BDL	-
(#/HR)	BDL	BDL	BDL	BDL	BDL	-
3. TETRACHLOROETHYLENE (ppm/vol)	BDL	BDL	BDL	BDL	BDL	-
(#/HR)	BDL	BDL	BDL	BDL	BDL	-
4. XYLENE (ppm/vol)	1.30	1.10	0.80	2.50	6.50	-
(#/HR)	6.000E-04	5.000E-04	4.000E-04	1.300E-03	2.800E-03	-
5. OTHER VOCs (ppm/vol)	0.60	0.50	0.80	1.10	4.30	-
(#/HR)	2.000E-04	2.000E-04	4.000E-04	5.000E-04	1.700E-03	-
6. TOTAL VOCs (ppm/vol)	2.40	2.00	1.60	3.60	10.80	-
(#/HR)	1.000E-03	9.000E-04	8.000E-04	1.800E-03	4.500E-03	-

PARAMETER	RUN 19	RUN 20	RUN 21	RUN 22	RUN 23	RUN 24
c. MANIFOLD #2						
1. DICHLOROETHYLENE (ppm/vol)	0.60	0.50	BDL	BDL	BDL	-
(#/HR)	2.000E-04	2.000E-04	BDL	BDL	BDL	-
2. TRICHLOROETHYLENE (ppm/vol)	0.30	0.30	BDL	BDL	BDL	-
(#/HR)	2.000E-04	2.000E-04	BDL	BDL	BDL	-
3. TETRACHLOROETHYLENE (ppm/vol)	BDL	BDL	BDL	BDL	BDL	-
(#/HR)	BDL	BDL	BDL	BDL	BDL	-
4. XYLENE (ppm/vol)	1.90	1.80	1.50	8.10	6.00	-
(#/HR)	9.000E-04	9.000E-04	8.000E-04	4.200E-03	2.600E-03	-
5. OTHER VOCs (ppm/vol)	0.80	1.60	2.00	5.30	3.60	-
(#/HR)	3.000E-04	7.000E-04	7.000E-04	2.500E-03	1.400E-03	-
6. TOTAL VOCs (ppm/vol)	3.60	4.20	3.50	13.40	9.60	-
(#/HR)	1.600E-03	2.000E-03	1.500E-03	6.700E-03	4.000E-03	-
d. MANIFOLD #3						
1. DICHLOROETHYLENE (ppm/vol)	0.50	BDL	BDL	BDL	BDL	-
(#/HR)	2.000E-04	BDL	BDL	BDL	BDL	-
2. TRICHLOROETHYLENE (ppm/vol)	0.30	BDL	BDL	BDL	BDL	-
(#/HR)	2.000E-04	BDL	BDL	BDL	BDL	-
3. TETRACHLOROETHYLENE (ppm/vol)	BDL	BDL	BDL	BDL	BDL	-
(#/HR)	BDL	BDL	BDL	BDL	BDL	-
4. XYLENE (ppm/vol)	2.20	1.30	2.10	2.40	2.60	-
(#/HR)	1.000E-03	6.000E-04	1.100E-03	1.200E-03	1.100E-03	-
5. OTHER VOCs (ppm/vol)	2.20	4.00	5.50	1.20	1.20	-
(#/HR)	9.000E-04	1.800E-03	2.700E-03	5.000E-04	5.000E-04	-
6. TOTAL VOCs (ppm/vol)	5.20	5.30	7.60	3.60	3.80	-
(#/HR)	2.300E-03	2.400E-03	3.800E-03	1.700E-03	1.600E-03	-
e. AFTERBURNER INLET						
1. DICHLOROETHYLENE (ppm/vol)	0.53	0.30	BDL	BDL	BDL	-
(#/HR)	6.000E-04	4.000E-04	BDL	BDL	BDL	-
2. TRICHLOROETHYLENE (ppm/vol)	0.20	0.10	BDL	BDL	BDL	-
(#/HR)	4.000E-04	2.000E-04	BDL	BDL	BDL	-
3. TETRACHLOROETHYLENE (ppm/vol)	BDL	BDL	BDL	BDL	BDL	-
(#/HR)	BDL	BDL	BDL	BDL	BDL	-
4. XYLENE (ppm/vol)	1.80	1.40	1.47	4.33	5.03	-
(#/HR)	2.500E-03	2.000E-03	2.300E-03	6.700E-03	6.500E-03	-
5. OTHER VOCs (ppm/vol)	1.20	2.03	2.77	2.53	3.03	-
(#/HR)	1.400E-03	2.700E-03	3.800E-03	3.500E-03	3.600E-03	-
6. TOTAL VOCs (ppm/vol)	3.73	3.83	4.23	6.87	8.07	358105.00
(#/HR)	4.900E-03	5.300E-03	6.100E-03	1.020E-02	1.010E-02	5.193E-02
f. STACK						
1. DICHLOROETHYLENE (ppm/vol)	-	-	-	-	-	-
(#/HR)	-	-	-	-	-	-
2. TRICHLOROETHYLENE (ppm/vol)	-	-	-	-	-	-
(#/HR)	-	-	-	-	-	-
3. TETRACHLOROETHYLENE (ppm/vol)	-	-	-	-	-	-
(#/HR)	-	-	-	-	-	-
4. XYLENE (ppm/vol)	-	-	-	-	-	-
(#/HR)	-	-	-	-	-	-
5. OTHER VOCs (ppm/vol)	-	-	-	-	-	-
(#/HR)	-	-	-	-	-	-
6. TOTAL VOCs (ppm/vol)	-	-	-	-	-	-
(#/HR)	-	-	-	-	-	-

PARAMETER	RUN 19	RUN 20	RUN 21	RUN 22	RUN 23	RUN 24
3. MOISTURE						
a. PROCESS AIR (%/vol)	1.90	1.70	2.20	2.40	2.30	0.80
(#/HR)	2.00	1.90	2.10	2.50	2.30	0.94
1. ENTHALPY (BTU/#)	1147.40	1147.80	1149.30	1147.80	1149.30	1091.00
b. INFILTRATION AIR (%/vol)	1.90	1.70	2.20	2.40	2.30	0.80
(#/HR)	2.48	2.33	4.00	4.10	2.87	1.23
1. ENTHALPY (BTU/#)	1097.10	1097.50	1098.40	1100.90	1101.40	1091.00
c. MANIFOLD #1 (%/vol)	-	-	-	-	-	-
(#/HR)	-	-	-	-	-	-
d. MANIFOLD #2 (%/vol)	-	-	-	-	-	-
(#/HR)	-	-	-	-	-	-
e. MANIFOLD #3 (%/vol)	-	-	-	-	-	-
(#/HR)	-	-	-	-	-	-
f. AFTERBURNER INLET (%/vol)	14.40	10.00	14.80	10.40	8.44	6.90
(#/HR)	39.30	27.00	47.20	31.10	20.40	20.00
1. ENTHALPY (BTU/#)	1158.05	1156.30	1161.55	1133.80	1135.00	1110.30
g. STACK (%/vol)	-	-	-	-	-	-
(#/HR)	-	-	-	-	-	-
4. FLOWRATE						
a. PROCESSOR INLET (WACFM)	48.90	49.80	44.00	47.50	47.00	42.60
(DSCFM)	37.60	38.40	33.40	36.00	35.40	41.70
(#/HR)	170.00	173.00	151.00	163.00	160.00	188.00
b. INFILTRATION AIR (DSCFM)	45.60	48.10	63.40	59.40	43.40	54.40
(#/HR)	206.00	217.00	286.00	268.00	196.00	246.00
c. MANIFOLD #1 (WACFM)	-	-	-	-	-	-
(DSCFM)	-	-	-	-	-	-
(#/HR)	-	-	-	-	-	-
d. MANIFOLD #2 (WACFM)	-	-	-	-	-	-
(DSCFM)	-	-	-	-	-	-
(#/HR)	-	-	-	-	-	-
e. MANIFOLD #3 (WACFM)	-	-	-	-	-	-
(DSCFM)	-	-	-	-	-	-
(#/HR)	-	-	-	-	-	-
f. AFTERBURNER INLET (WACFM)	135.00	132.00	160.00	136.00	111.00	120.00
(DSCFM)	83.20	86.50	96.80	95.40	78.80	96.10
(#/HR)	376.00	390.00	437.00	431.00	356.00	434.00
g. STACK (WACFM)	593.00	480.00	517.00	640.00	624.00	681.00
(DSCFM)	113.00	98.00	98.80	127.00	128.00	142.00
(#/HR)	522.00	451.00	454.00	586.00	588.00	649.00
5. PARTICULATE EMISS-ABI/STACK (GR/WACFM)	-	-	-	-	-	-
(GR/DSCFM)	-	-	-	-	-	-
(#/HR)	-	-	-	-	-	-
6. HYDROGEN CHLORIDE EMISSIONS (#/DSCFM)	-	-	-	-	-	-
(#/HR)	-	-	-	-	-	-
7. CARBON DIOXIDE EMISSIONS (%/vol)	-	-	-	-	-	-
(#/HR)	-	-	-	-	-	-
8. OXYGEN EMISSIONS (%/vol)	-	-	-	-	-	-
(#/HR)	-	-	-	-	-	-
9. CARBON MONOXIDE EMISSIONS (%/vol)	-	-	-	-	-	-
(#/HR)	-	-	-	-	-	-

PARAMETER	RUN 19	RUN 20	RUN 21	RUN 22	RUN 23	RUN 24
10. ENERGY - AIR/MOISTURE	-	-	-	-	-	-
a. PROCESS AIR INLET (BTU/HR)	8394.14	8542.27	7587.03	8048.50	8039.24	2984.45
1. SPECIFIC HEAT (BTU/#F)	2.411E-01	2.411E-01	2.411E-01	2.411E-01	2.411E-01	2.398E-01
2. MOISTURE (BTU/HR)	2294.80	2180.82	2413.53	2869.50	2643.39	1025.54
b. INFILTRATION AIR INLET (BTU/HR)	3983.20	4289.60	5777.08	5760.67	4297.66	3905.19
1. SPECIFIC HEAT (BTU/#F)	2.399E-01	2.399E-01	2.399E-01	2.399E-01	2.399E-01	2.398E-01
2. MOISTURE (BTU/HR)	2718.06	2560.99	4394.37	4510.85	3156.68	1342.66
c. AFTERBURNER INLET (BTU/HR)	21211.81	21493.02	25613.51	17511.60	14772.82	11587.42
1. SPECIFIC HEAT (BTU/#F)	2.415E-01	2.415E-01	2.416E-01	2.407E-01	2.407E-01	2.401E-01
2. MOISTURE (BTU/HR)	45511.37	31220.10	54825.16	35261.18	23154.00	22206.00
OIL SYSTEM PARAMETERS						
1. TEMPERATURE						
a. SCREW INLET (C)	292.51	298.89	299.36	221.13	221.72	144.71
b. SCREW OUTLET/TROUGH INLET (C)	283.33	290.10	293.79	211.37	213.39	138.88
c. TROUGH OUTLET (C)	282.22	290.56	295.17	207.91	210.25	138.88
2. PRESSURE						
a. SCREW INLET (PSIG)	33.52	37.00	36.83	23.05	23.00	28.00
b. SCREW OUTLET/TROUGH INLET (PSIG)	9.92	11.99	12.00	7.72	10.00	8.15
3. FLOWRATE (GPM)	12.50	13.00	12.80	9.70	8.80	11.40
(#/HR)	6293.36	6545.10	6444.40	4883.65	4430.53	5739.55
4. HEAT RELEASED						
a. INLET (BTU/HR)	2144122.45	2294392.86	2262445.30	1148774.14	1044761.12	809129.59
1. SPECIFIC HEAT-INLET (BTU/#F)	6.100E-01	6.150E-01	6.150E-01	5.470E-01	5.470E-01	4.820E-01
b. OUTLET (BTU/HR)	2039033.54	2197712.63	2214403.20	1061399.45	981995.96	773624.49
1. SPECIFIC HEAT-OUTLET (BTU/#F)	6.000E-01	6.050E-01	6.100E-01	5.350E-01	5.400E-01	4.780E-01
PROPANE SYSTEM PARAMETERS						
1. PROPANE CONSUMPTION (SCFM)	2.30	1.93	2.01	2.57	2.64	2.64
(#/HR)	0.26	0.22	0.23	0.29	0.30	0.30
PROCESSOR PARAMETERS						
1. SCREW SPEED (SEC/REV)	129.00	189.63	162.10	127.00	184.23	124.79
HEAT LOSS (BTU/HR)	42860.14	53470.83	-22319.54	51546.51	39392.26	9513.94
1. PERCENT TOTAL HEAT (BTU/HR)	40.78	55.31	-46.46	58.99	62.76	26.80

PARAMETER	RUN 25	RUN 26	RUN 27	RUN 28
A. CONTROL PARAMETERS				
1. TARGET SOIL RESIDENCE TIME (MIN)	60.00	60.00	60.00	90.00
a. TARGET SCREW SPEED (SEC/REV)	128.57	128.57	128.57	192.86
2. TARGET SOIL DISCHARGE TEMP (C)	50.00	50.00	MAX	MAX
3. TARGET AIR INLET TEMP (C)	25.00	25.00	25.00	25.00
4. TARGET AIR FLOW RATE (DSCFM)	100.00	100.00	75.00	75.00
B. SOIL SYSTEM PARAMETERS				
1. TEMPERATURE				
a. FEED SOIL (C)	14.16	17.67	18.75	19.16
b. PROCESSED SOIL (C)	59.84	62.84	174.58	185.00
2. VOCs				
a. FEED SOIL				
1. DICHLOROETHYLENE-LAB (ug/kg)	35000.00	*30000.00	BDL	*6700.00
CORRESP (ug/kg)	35000.00	*30000.00	BDL	*6700.00
($/HR)	6.106E-03	4.653E-03	BDL	7.319E-04
2. TRICHLOROETHYLENE-LAB (ug/kg)	1100000.00	2300000.00	83000.00	430000.00
CORRESP (ug/kg)	1100000.00	2300000.00	83000.00	430000.00
($/HR)	1.919E-01	3.567E-01	1.697E-02	4.697E-02
3. TETRACHLOROETHYLENE-LAB (ug/kg)	470000.00	890000.00	120000.00	340000.00
CORRESP (ug/kg)	470000.00	890000.00	120000.00	340000.00
($/HR)	8.200E-02	1.380E-01	2.454E-02	3.714E-02
4. XYLENE-LAB (ug/kg)	37000.00	87000.00	*23000.00	49000.00
CORRESP (ug/kg)	37000.00	87000.00	*23000.00	49000.00
($/HR)	6.455E-03	1.349E-02	4.704E-03	5.353E-03
5. OTHER VOCs-LAB (ug/kg)	*8600.00	*17000.00	BDL	6200.00
CORRESP (ug/kg)	*8600.00	*17000.00	BDL	6200.00
($/HR)	1.500E-03	2.637E-03	BDL	6.773E-04
6. TOTAL VOCs-LAB (ug/kg)	1650600.00	3324000.00	226000.00	831900.00
CORRESP (ug/kg)	1650600.00	3324000.00	226000.00	831900.00
($/HR)	2.880E-01	5.155E-01	4.622E-02	9.088E-02
b. PROCESSED SOIL				
1. DICHLOROETHYLENE (ug/kg)	13000.00	3300.00	*390.00	*90.00
($/HR)	2.089E-03	4.533E-04	7.079E-05	8.257E-06
2. TRICHLOROETHYLENE (ug/kg)	21000.00	52000.00	1900.00	*130.00
($/HR)	3.374E-03	7.143E-03	3.449E-04	1.193E-05
3. TETRACHLOROETHYLENE (ug/kg)	8600.00	48000.00	*270.00	BDL
($/HR)	1.382E-03	6.593E-03	4.901E-05	BDL
4. XYLENE (ug/kg)	890.00	5800.00	*27.00	BDL
($/HR)	1.430E-04	7.967E-04	4.901E-06	BDL
5. OTHER VOCs (ug/kg)	451.00	2890.00	*172.00	*700.00
($/HR)	7.246E-05	3.970E-04	3.122E-05	6.422E-05
6. TOTAL VOCs (ug/kg)	43941.00	111990.00	2759.00	920.00
($/HR)	7.060E-03	1.538E-02	5.008E-04	8.440E-05
c. REMOVAL EFFICIENCY				
1. DICHLOROETHYLENE (%)	65.79	90.26	-	98.87
2. TRICHLOROETHYLENE (%)	98.24	98.00	97.97	99.97
3. TETRACHLOROETHYLENE (%)	98.31	95.22	99.80	100.00
4. XYLENE (%)	97.78	94.10	99.90	100.00
5. OTHER VOCs (%)	95.17	84.94	-	90.52
6. MAJOR 4 CONTAMINANTS (%)	97.56	97.08	98.98	99.98
7. TOTAL VOCs (%)	97.55	97.02	98.92	99.91

PARAMETER	RUN 25	RUN 26	RUN 27	RUN 28
3. MOISTURE				
a. EXCAVATED SOIL (%)	21.00	21.00	10.60	10.60
b. FEED SOIL (%)	18.40	18.20	10.70	11.30
(#/HR)	20.74	21.34	24.78	17.50
1. ENTHALPY (BTU/#)	25.06	32.05	34.05	35.05
c. PROCESSED SOIL (%)	4.50	3.00	1.00	0.10
(#/HR)	7.22	4.11	1.81	0.09
1. ENTHALPY (BTU/#)	107.89	112.89	317.43	337.48
4. MASS FLOWRATE				
a. FEED SOIL				
1. WET BASIS (#/HR)	174.46	155.10	204.51	109.24
2. DRY BASIS (#/HR)	153.43	133.24	179.69	91.65
b. PROCESSED SOIL				
1. WET BASIS (#/HR)	160.66	137.36	181.50	91.74
2. DRY BASIS (#/HR)	153.43	133.24	179.69	91.65
5. DENSITY				
a. FEED SOIL (#/CU FT)	86.92	98.51	-	-
b. PROCESSED SOIL (#/CU FT)	76.11	72.96	80.90	84.63
6. ENERGY - SOIL/MOISTURE				
a. SOIL IN				
1. INERT SOIL (BTU/HR)	1764.08	1700.29	2362.86	1218.70
2. MOISTURE (BTU/HR)	519.73	684.08	843.64	613.48
b. SOIL OUT				
1. INERT SOIL (BTU/HR)	4287.21	3866.92	12442.97	6690.32
2. MOISTURE (BTU/HR)	779.25	463.46	575.98	30.93
AIR SYSTEM PARAMETERS				
1. TEMPERATURE				
a. AMBIENT AIR (C)	17.00	20.00	21.00	21.00
b. HEATER EFFLUENT/PROC INLET (C)	17.00	20.00	21.00	21.00
c. INFILTRATION AIR (C)	17.00	20.00	21.00	21.00
d. MANIFOLD #1 (C)	43.00	50.00	91.00	71.00
e. MANIFOLD #2 (C)	51.00	63.00	118.00	103.00
f. MANIFOLD #3 (C)	67.00	75.00	145.00	146.00
g. AFTERBURNER INLET (C)	44.00	52.00	91.00	88.00
h. STACK	890.00	896.00	901.00	903.00
2. VOCs				
a. AMBIENT AIR				
1. TOTAL VOCs (ppm/vol)	BDL	BDL	BDL	BDL
(#/HR)	BDL	BDL	BDL	BDL
b. MANIFOLD #1				
1. DICHLOROETHYLENE (ppm/vol)	-	-	-	-
(#/HR)	-	-	-	-
2. TRICHLOROETHYLENE (ppm/vol)	-	-	-	-
(#/HR)	-	-	-	-
3. TETRACHLOROETHYLENE (ppm/vol)	-	-	-	-
(#/HR)	-	-	-	-
4. XYLENE (ppm/vol)	-	-	-	-
(#/HR)	-	-	-	-
5. OTHER VOCs (ppm/vol)	-	-	-	-
(#/HR)	-	-	-	-
6. TOTAL VOCs (ppm/vol)	-	-	-	-
(#/HR)	-	-	-	-

PARAMETER	RUN 25	RUN 26	RUN 27	RUN 28
c. MANIFOLD #2				
1. DICHLOROETHYLENE (ppm/vol)	-	-	-	-
(#/HR)	-	-	-	-
2. TRICHLOROETHYLENE (ppm/vol)	-	-	-	-
(#/HR)	-	-	-	-
3. TETRACHLOROETHYLENE (ppm/vol)	-	-	-	-
(#/HR)	-	-	-	-
4. XYLENE (ppm/vol)	-	-	-	-
(#/HR)	-	-	-	-
5. OTHER VOCs (ppm/vol)	-	-	-	-
(#/HR)	-	-	-	-
6. TOTAL VOCs (ppm/vol)	-	-	-	-
(#/HR)	-	-	-	-
d. MANIFOLD #3				
1. DICHLOROETHYLENE (ppm/vol)	-	-	-	-
(#/HR)	-	-	-	-
2. TRICHLOROETHYLENE (ppm/vol)	-	-	-	-
(#/HR)	-	-	-	-
3. TETRACHLOROETHYLENE (ppm/vol)	-	-	-	-
(#/HR)	-	-	-	-
4. XYLENE (ppm/vol)	-	-	-	-
(#/HR)	-	-	-	-
5. OTHER VOCs (ppm/vol)	-	-	-	-
(#/HR)	-	-	-	-
6. TOTAL VOCs (ppm/vol)	-	-	-	-
(#/HR)	-	-	-	-
e. AFTERBURNER INLET				
1. DICHLOROETHYLENE (ppm/vol)	-	-	-	-
(#/HR)	-	-	-	-
2. TRICHLOROETHYLENE (ppm/vol)	-	-	-	-
(#/HR)	-	-	-	-
3. TETRACHLOROETHYLENE (ppm/vol)	-	-	-	-
(#/HR)	-	-	-	-
4. XYLENE (ppm/vol)	-	-	-	-
(#/HR)	-	-	-	-
5. OTHER VOCs (ppm/vol)	-	-	-	-
(#/HR)	-	-	-	-
6. TOTAL VOCs (ppm/vol)	1606659.00	3212010.00	223241.00	830980.00
(#/HR)	2.809E-01	5.002E-01	4.572E-02	9.079E-02
f. STACK				
1. DICHLOROETHYLENE (ppm/vol)	-	-	-	-
(#/HR)	-	-	-	-
2. TRICHLOROETHYLENE (ppm/vol)	-	-	-	-
(#/HR)	-	-	-	-
3. TETRACHLOROETHYLENE (ppm/vol)	-	-	-	-
(#/HR)	-	-	-	-
4. XYLENE (ppm/vol)	-	-	-	-
(#/HR)	-	-	-	-
5. OTHER VOCs (ppm/vol)	-	-	-	-
(#/HR)	-	-	-	-
6. TOTAL VOCs (ppm/vol)	-	-	-	-
(#/HR)	-	-	-	-

PARAMETER	RUN 25	RUN 26	RUN 27	RUN 28
3. MOISTURE				
a. PROCESS AIR (%/vol)	1.00	1.00	1.00	1.20
(#/HR)	1.20	1.20	0.93	1.00
1. ENTHALPY (BTU/#)	1088.90	1091.50	1092.30	1092.30
b. INFILTRATION AIR (%/vol)	1.00	1.00	1.00	1.00
(#/HR)	1.68	1.56	1.11	1.79
1. ENTHALPY (BTU/#)	1088.90	1091.50	1092.30	1092.30
c. MANIFOLD #1 (%/vol)	-	-	-	-
(#/HR)	-	-	-	-
d. MANIFOLD #2 (%/vol)	-	-	-	-
(#/HR)	-	-	-	-
e. MANIFOLD #3 (%/vol)	-	-	-	-
(#/HR)	-	-	-	-
f. AFTERBURNER INLET (%/vol)	5.40	6.90	11.00	8.00
(#/HR)	16.40	20.00	25.00	20.20
1. ENTHALPY (BTU/#)	1109.90	1116.20	1144.40	1142.40
g. STACK (%/vol)	-	-	-	-
(#/HR)	-	-	-	-
4. FLOWRATE				
a. PROCESSOR INLET (WACFM)	43.90	43.00	33.70	31.50
(DSCFM)	43.60	42.30	33.00	30.50
(#/HR)	197.00	191.00	149.00	138.00
b. INFILTRATION AIR (DSCFM)	59.40	55.10	39.10	52.50
(#/HR)	267.00	249.00	176.00	237.00
c. MANIFOLD #1 (WACFM)	-	-	-	-
(DSCFM)	-	-	-	-
(#/HR)	-	-	-	-
d. MANIFOLD #2 (WACFM)	-	-	-	-
(DSCFM)	-	-	-	-
(#/HR)	-	-	-	-
e. MANIFOLD #3 (WACFM)	-	-	-	-
(DSCFM)	-	-	-	-
(#/HR)	-	-	-	-
f. AFTERBURNER INLET (WACFM)	125.00	124.00	107.00	119.00
(DSCFM)	103.00	97.40	72.10	83.00
(#/HR)	464.00	440.00	325.00	375.00
g. STACK (WACFM)	621.00	720.00	494.00	559.00
(DSCFM)	118.00	158.00	111.00	121.00
(#/HR)	540.00	723.00	511.00	555.00
5. PARTICULATE EMISS-ABI/STACK (GR/WACFM)	-	-	-	-
(GR/DSCFM)	-	-	-	-
(#/HR)	-	-	-	-
6. HYDROGEN CHLORIDE EMISSIONS (#/DSCFM)	-	-	-	-
(#/HR)	-	-	-	-
7. CARBON DIOXIDE EMISSIONS (%/vol)	-	-	-	-
(#/HR)	-	-	-	-
8. OXYGEN EMISSIONS (%/vol)	-	-	-	-
(#/HR)	-	-	-	-
9. CARBON MONOXIDE EMISSIONS (%/vol)	-	-	-	-
(#/HR)	-	-	-	-

PARAMETER	RUN 25	RUN 26	RUN 27	RUN 28
10. ENERGY - AIR/MOISTURE	-	-	-	-
a. PROCESS AIR INLET (BTU/HR)	2957.26	3114.52	2493.97	2309.85
1. SPECIFIC HEAT (BTU/#F)	2.398E-01	2.398E-01	2.398E-01	2.398E-01
2. MOISTURE (BTU/HR)	1306.68	1309.80	1015.84	1092.30
b. INFILTRATION AIR INLET (BTU/HR)	4008.07	4060.29	2945.90	3966.92
1. SPECIFIC HEAT (BTU/#F)	2.398E-01	2.398E-01	2.398E-01	2.398E-01
2. MOISTURE (BTU/HR)	1832.75	1704.13	1210.17	1953.84
c. AFTERBURNER INLET (BTU/HR)	12388.39	13274.41	15336.04	17207.40
1. SPECIFIC HEAT (BTU/#F)	2.401E-01	2.402E-01	2.410E-01	2.410E-01
2. MOISTURE (BTU/HR)	18202.36	22324.00	28610.00	23076.48
D. OIL SYSTEM PARAMETERS				
1. TEMPERATURE				
a. SCREW INLET (C)	144.71	148.20	294.03	289.13
b. SCREW OUTLET/TROUGH INLET (C)	139.18	144.02	277.36	275.24
c. TROUGH OUTLET (C)	137.78	140.56	260.69	264.41
2. PRESSURE				
a. SCREW INLET (PSIG)	30.00	30.00	20.88	18.22
b. SCREW OUTLET/TROUGH INLET (PSIG)	8.50	9.50	10.38	10.33
3. FLOWRATE (GPM)	11.90	11.60	7.60	6.20
(#/HR)	5991.28	5840.24	3826.36	3121.51
4. HEAT RELEASED				
a. INLET (BTU/HR)	844617.08	846242.60	1310011.51	1043279.09
1. SPECIFIC HEAT-INLET (BTU/#F)	4.820E-01	4.850E-01	6.100E-01	6.050E-01
b. OUTLET (BTU/HR)	796851.62	798967.26	1112400.76	927537.12
1. SPECIFIC HEAT-OUTLET (BTU/#F)	4.750E-01	4.800E-01	5.800E-01	5.850E-01
E. PROPANE SYSTEM PARAMETERS				
1. PROPANE CONSUMPTION (SCFM)	2.78	2.73	2.13	2.51
(#/HR)	0.32	0.31	0.24	0.29
F. PROCESSOR PARAMETERS				
1. SCREW SPEED (SEC/REV)	124.23	125.50	125.65	183.43
G. HEAT LOSS (BTU/HR)	24496.81	19919.67	151518.15	79891.92
1. PERCENT TOTAL HEAT (BTU/HR)	51.29	42.14	76.68	69.03

APPENDIX G

MASS/ENERGY BALANCES

Stream Number		1	2	3	4	5	6	7	8	9
Description		Soil Feed	Oil Inlet	Process Air Inlet	Infil-tration Air	Oil Outlet	Soil Dis-charge	Off-Gas Dis-Charge	Stack Exhaust	Heat Loss
Inerts	(lb/hr)	151.75					151.75			
VOC's - Dichloroethylene	(lb/hr)	BDL					BDL	BDL		
Trichloroethylene	(lb/hr)	BDL					BDL	BDL		
Tetrachloroethylene	(lb/hr)	BDL					BDL	BDL		
Xylene	(lb/hr)	BDL					BDL	BDL		
Other VOC's	(lb/hr)	BDL					BDL	BDL		
Moisture	(lb/hr)	29.59					12.11			
Oil	(lb/hr)		5510.16			5510.16				
Air	(lb/hr)			230.00	176.00			410.00		
Water Vapor	(lb/hr)			1.00	2.24			22.70		
Particulate	(lb/hr)									
Hydrochloric Acid	(lb/hr)									
Carbon Dioxide	(lb/hr)									
Oxygen	(lb/hr)									
Carbon Monoxide	(lb/hr)									
Propane	(lb/hr)									
Total Mass	(lb/hr)	181.34	5510.16	237.00	178.24	5510.16	163.86	432.70		
Average Temp	(°F)	76	264	82	82	250	325	100		
Specific Heat/Heating Value	(Btu/lb)	19.94	120.22	33.42	33.37	175.75	30.04	80.03		
Heat Rate	(Btu/hr)	1616.29	607929.74	7919.36	5936.10	641016.09	4923.67	34967.40		24474.33

Notes: BDL - Below Detection Level

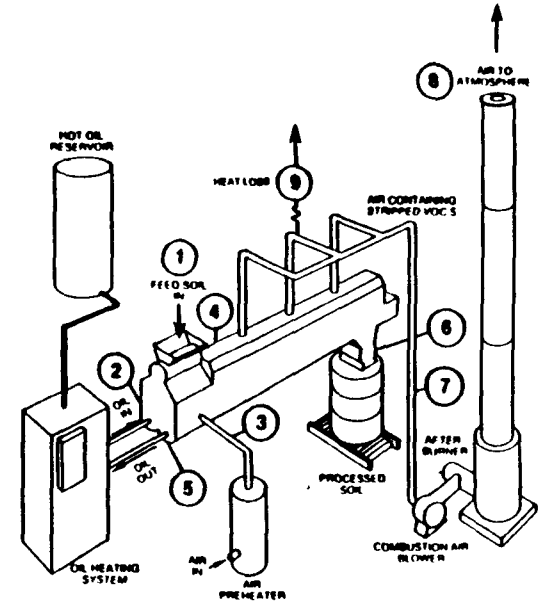

For Thermal Stripping of VOC's from Soil Pilot Study
At Letterkenny Army Depot (LEAD) Chambersburg PA

WESTON
WESTON WAY
WEST CHESTER PENNSYLVANIA 19380
PHONE 215 692 3030
TELEX 83 5340

FIGURE G-1 MATERIAL/ENERGY BALANCE FOR TEST RUN 1

Scale	None	Project Number	Drawing Number
Date	11/85	2281-01-11	

Stream Number		1	2	3	4	5	6	7	8	9
Description		Soil Feed	Oil Inlet	Process Air Inlet	Infil-tration Air	Oil Outlet	Soil Dis-charge	Off-Gas Dis-Charge	Stack Exhaust	Heat Loss
Inerts	(lb/hr)	160.94					160.94			
VOC's - Dichloroethylene	(lb/hr)	1.11×10^{-1}					1.22×10^{-4}	1.11×10^{-2}		
Trichloroethylene	(lb/hr)	6.55×10^{-1}					7.27×10^{-3}	6.48×10^{-1}		
Tetrachloroethylene	(lb/hr)	5.76×10^{-1}					5.83×10^{-2}	5.28×10^{-1}		
Xylene	(lb/hr)	4.65×10^{-3}					6.56×10^{-4}	4.00×10^{-3}		
Other VOC's	(lb/hr)	2.00×10^{-3}					BDL	2.00×10^{-3}		
Moisture	(lb/hr)	27.05					12.65			
Oil	(lb/hr)		5890.59			5890.59				
Air	(lb/hr)			112.00	270.00			382.00		
Water Vapor	(lb/hr)			1.10	2.56			18.90		
Particulate	(lb/hr)									
Hydrochloric Acid	(lb/hr)									
Carbon Dioxide	(lb/hr)									
Oxygen	(lb/hr)									
Carbon Monoxide	(lb/hr)									
Propane	(lb/hr)									
Total Mass	(lb/hr)	190.30	5890.59	113.10	272.56	5890.59	181.66	402.10		
Average Temp	(°F)	76	210	162	81	206	141	93		
Specific Heat/Heating Value	(Btu/lb)	19.19	90.07	44.66	29.46	90.58	33.89	73.06		
Heat Rate	(Btu/hr)	3003.63	577707.03	5051.63	8024.74	533565.40	6155.93	29383.72		25404.50

Notes BDL - Below Detection Level

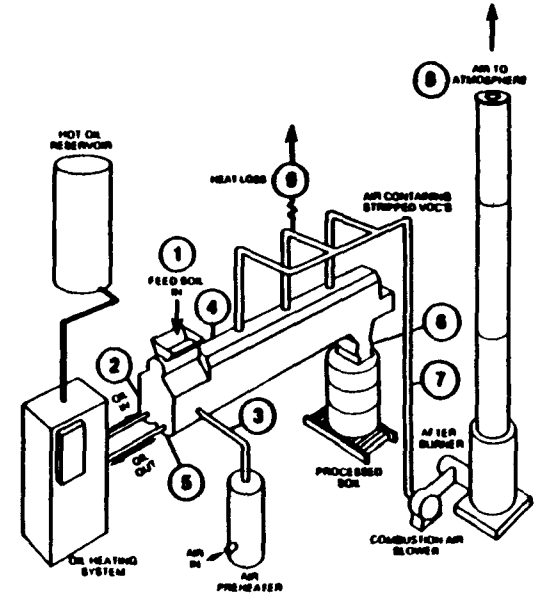

For Thermal Stripping of VOC's from Soil Pilot Study
At Letterkenny Army Depot (LEAD) Chambersburg, PA

WESTON
WESTON WAY
WEST CHESTER PENNSYLVANIA 19380
PHONE 215 692 3030
TELEX 83 5340

FIGURE G-2 MATERIAL/ENERGY BALANCE FOR TEST RUN 2

Scale	None	Project Number	Drawing Number
Date	11/85	2281-01-11	

Stream Number		1	2	3	4	5	6	7	8	9
Description		Soil Feed	Oil Inlet	Process Air Inlet	Infil-tration Air	Oil Outlet	Soil Dis-charge	Off-Gas Dis-Charge	Stack Exhaust	Heat Loss
Inerts	(lb/hr)	116.90					116.90			
VOC's - Dichloroethylene	(lb/hr)	BDL					BDL	BDL		
Trichloroethylene	(lb/hr)	4.00×10^{-3}					1.76×10^{-6}	4.00×10^{-3}		
Tetrachloroethylene	(lb/hr)	9.01×10^{-1}					4.23×10^{-6}	9.00×10^{-3}		
Xylene	(lb/hr)	6.00×10^{-3}					BDL	6.00×10^{-3}		
Other VOC's	(lb/hr)	BDL					BDL	BDL		
Moisture	(lb/hr)	40.17					10.56			
Oil	(lb/hr)		5530.16			5530.16				
Air	(lb/hr)			189.00	167.00			356.00		
Water Vapor	(lb/hr)			3.40	2.99			36.00		
Particulate	(lb/hr)									
Hydrochloric Acid	(lb/hr)									
Carbon Dioxide	(lb/hr)									
Oxygen	(lb/hr)									
Carbon Monoxide	(lb/hr)									
Propane	(lb/hr)									
Total Mass	(lb/hr)	165.09	5530.16	192.40	169.99	5530.16	135.46	392.02		
Average Temp	(°F)	76	205	84	84	200	122	102		
Specific Heat/Heating Value	(Btu/lb)	21.64	90.10	39.26	39.17	88.00	33.29	123.85		
Heat Rate	(Btu/hr)	3903.03	498566.95	7553.64	6650.63	487363.46	4509.36	48551.57		-23322.14

Notes BDL - Below Detection Level

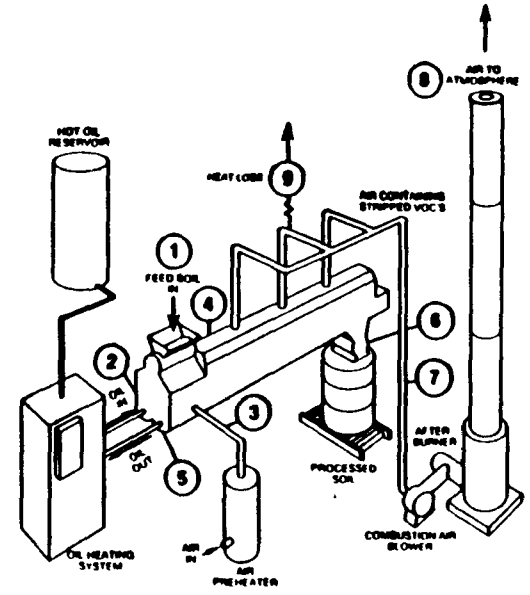

For Thermal Stripping of VOC's from Soil Pilot Study
At Letterkenny Army Depot (LEAD) Chambersburg, PA

WESTON
WESTON WAY
WEST CHESTER PENNSYLVANIA 19380
PHONE 215 692 3030
TELEX 83 5380

FIGURE G-3 MATERIAL/ENERGY BALANCE FOR TEST RUN 3

Scale	None	Project Number	Drawing Number
Date	11/85	2281-01-11	

Stream Number		1	2	3	4	5	6	7	8	9
Description		Soil Feed	Oil Inlet	Process Air Inlet	Infil-tration Air	Oil Outlet	Soil Dis-charge	Off-Gas Dis-Charge	Stack Exhaust	Heat Loss
Inerts	(lb/hr)	254.42					254.42			
VOC's - Dichloroethylene	(lb/hr)	BDL					BDL	BDL		
Trichloroethylene	(lb/hr)	1.59×10^{-5}					1.59×10^{-5}	BDL		
Tetrachloroethylene	(lb/hr)	2.01×10^{-3}					9.48×10^{-6}	2.00×10^{-3}		
Xylene	(lb/hr)	8.97×10^{-6}					8.97×10^{-6}	BDL		
Other VOC's	(lb/hr)	1.77×10^{-5}					1.77×10^{-5}	BDL		
Moisture	(lb/hr)	56.20					1.72			
Oil	(lb/hr)		6531.22	100.00	205.00	6531.22		305.00		
Air	(lb/hr)			1.40	2.00			50.00		
Water Vapor	(lb/hr)									
Particulate	(lb/hr)									
Hydrochloric Acid	(lb/hr)									
Carbon Dioxide	(lb/hr)									
Oxygen	(lb/hr)									
Carbon Monoxide	(lb/hr)									
Propane	(lb/hr)									
Total Mass	(lb/hr)	310.66	6531.22	101.40	207.00	6531.22	256.14	603.00		
Average Temp	(°F)	76	370	172	84	310	237	140		
Specific Heat/Heating Value	(Btu/lb)	20.46	399.03	51.09	31.01	357.57	40.60	190.20		
Heat Rate	(Btu/hr)	6355.02	901865.94	7336.76	6420.52	713990.56	12396.55	76602.49		110900.65

Notes: BDL - Below Detection Level

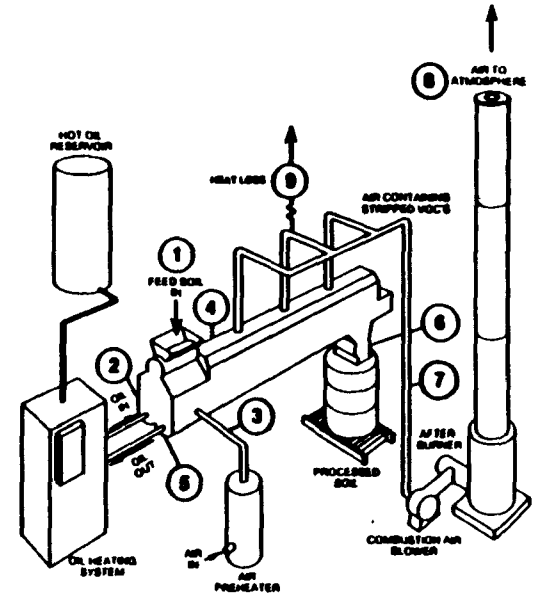

For Thermal Stripping of VOC's from Soil Pilot Study
At Letterkenny Army Depot (LEAD) Chambersburg, PA

WESTON
WESTON WAY
WEST CHESTER PENNSYLVANIA 19380
PHONE 215 692 3030
TELEX 83 5348

FIGURE G-4 MATERIAL/ENERGY BALANCE FOR TEST RUN 4

Scale	None	Project Number	Drawing Number
Date	11/85	2281-01-11	

Stream Number		1	2	3	4	5	6	7	8	9
Description		Soil Feed	Oil Inlet	Process Air Inlet	Infil-tration Air	Oil Outlet	Soil Dis-charge	Off-Gas Dis-Charge	Stack Exhaust	Heat Loss
Inerts	(lb/hr)	160.60					160 60			
VOC's - Dichloroethylene	(lb/hr)	$2\ 00 \times 10^{-1}$					BDL	$2\ 00 \times 10^{-1}$		
Trichloroethylene	(lb/hr)	$7\ 69 \times 10^{-1}$					$1\ 19 \times 10^{-3}$	$7\ 68 \times 10^{-1}$		
Tetrachloroethylene	(lb/hr)	$1\ 32 \times 10^{-1}$					BDL	$1\ 32 \times 10^{-1}$		
Xylene	(lb/hr)	$6\ 60 \times 10^{-2}$					BDL	$6\ 60 \times 10^{-2}$		
Other VOC's	(lb/hr)	$3\ 20 \times 10^{-2}$					BDL	$3\ 20 \times 10^{-2}$		
Moisture	(lb/hr)	51 51					3 07			
Oil	(lb/hr)		5630 05			5630.05				
Air	(lb/hr)			102 00	199 00			300 00		
Water Vapor	(lb/hr)			0.77	1 50			50.70		
Particulate	(lb/hr)									
Hydrochloric Acid	(lb/hr)									
Carbon Dioxide	(lb/hr)									
Oxygen	(lb/hr)									
Carbon Monoxide	(lb/hr)									
Propane	(lb/hr)									
Total Mass	(lb/hr)	221 32	5630.05	102.77	199.50	5630 05	171 67	351.91		
Average Temp	(°F)	76	345	147	77	293	200	130		
Specific Heat/Heating Value	(Btu/lb)	21 06	174.41	43 55	26 55	141 94	43.91	189.90		
Heat Rate	(Btu/hr)	4630 11	981459 40	4475 63	5295 96	800373.46	7530.73	66027 96		8974429 81

Notes. BDL - Below Detection Level

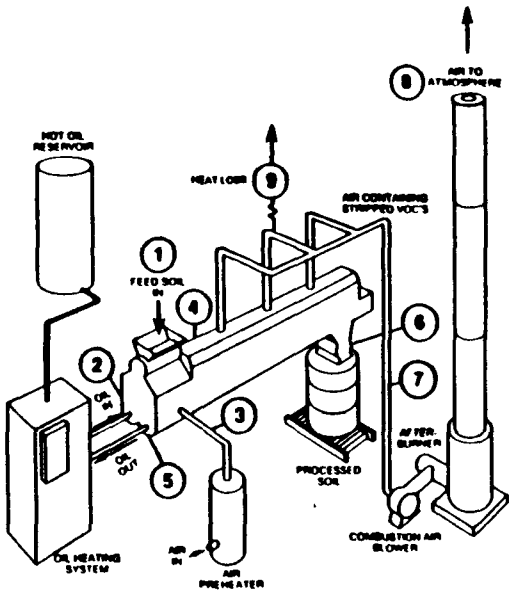

For Thermal Stripping of VOC's from Soil Pilot Study
At Letterkenny Army Depot (LEAD) Chambersburg PA

WESTON
WESTON WAY
WEST CHESTER PENNSYLVANIA 19380
PHONE 215 692 3030
TELEX 83 5340

FIGURE G-5 MATERIAL/ENERGY BALANCE FOR TEST RUN 5

Scale	None	Project Number	Drawing Number
Date	11/85	2281-01-11	

Stream Number		1	2	3	4	5	6	7	8	9
Description		Soil Feed	Oil Inlet	Process Air Inlet	Infil-tration Air	Oil Outlet	Soil Dis-charge	Off-Gas Dis-Charge	Stack Exhaust	Heat Loss
Inerts	(lb/hr)	304.92					304.92			
VOC's - Dichloroethylene	(lb/hr)	2.03×10^{-1}					6.25×10^{-4}	2.02×10^{-1}		
Trichloroethylene	(lb/hr)	1.11					1.00×10^{-2}	1.09		
Tetrachloroethylene	(lb/hr)	1.93×10^{-2}					3.29×10^{-4}	1.90×10^{-2}		
Xylene	(lb/hr)	1.12×10^{-1}					3.60×10^{-3}	1.09×10^{-1}		
Other VOC's	(lb/hr)	3.43×10^{-2}					3.29×10^{-4}	3.40×10^{-2}		
Moisture	(lb/hr)	76.35					24.20			
Oil	(lb/hr)		4934.00			4934.00				
Air	(lb/hr)			117.00	191.00			308.00		
Water Vapor	(lb/hr)			1.60	2.55			56.30		
Particulate	(lb/hr)									
Hydrochloric Acid	(lb/hr)									
Carbon Dioxide	(lb/hr)									
Oxygen	(lb/hr)									
Carbon Monoxide	(lb/hr)									
Propane	(lb/hr)									
Total Mass	(lb/hr)	382.75	4934.00	118.60	193.55	4934.00	329.14	365.76		
Average Temp	(°F)	76	510	82	82	399	193	151	1535	
Specific Heat/Heating Value	(Btu/lb)	20.93	305.96	34.31	33.90	213.33	67.55	203.86		
Heat Rate	(Btu/hr)	8010.21	1509605.05	4069.07	6576.74	1052576.39	19651.63	74565.14		385669.11

Notes. BDL - Below Detection Level

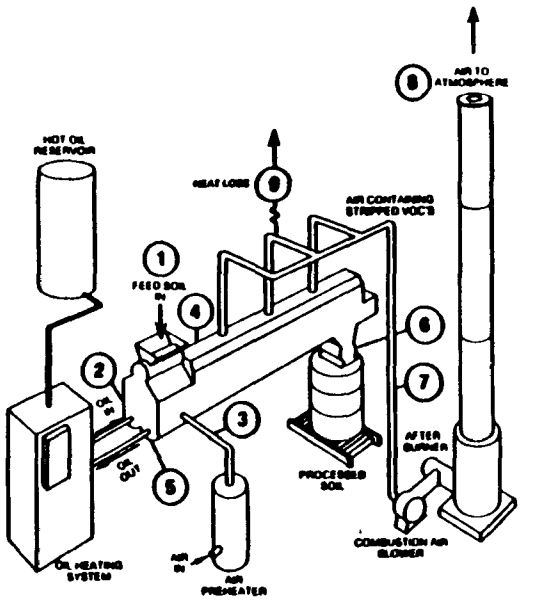

For Thermal Stripping of VOC's from Soil Pilot Study
At Letterkenny Army Depot (LEAD) Chambersburg, PA

WESTON
WESTON WAY
WEST CHESTER PENNSYLVANIA 19380
PHONE 215 692 3030
TELEX 83 5348

FIGURE G-6 MATERIAL/ENERGY BALANCE FOR TEST RUN 6

Scale	None	Project Number	Drawing Number
Date	11/85	2201-01-11	

Stream Number		1	2	3	4	5	6	7	8	9
Description		Soil Feed	Oil Inlet	Process Air Inlet	Infil-tration Air	Oil Outlet	Soil Dis-charge	Off-Gas Dis-Charge	Stack Exhaust	Heat Loss
Inerts	(lb/hr)	229.93					229.93			
VOC's - Dichloroethylene	(lb/hr)	4.37×10^{-5}					4.37×10^{-5}	BDL		
Trichloroethylene	(lb/hr)	8.06×10^{-3}					5.91×10^{-5}	8.00×10^{-3}		
Tetrachloroethylene	(lb/hr)	2.10×10^{-5}					2.10×10^{-5}	BDL		
Xylene	(lb/hr)	2.00×10^{-3}					BDL	2.00×10^{-3}		
Other VOC's	(lb/hr)	BDL					BDL	BDL		
Moisture	(lb/hr)	35.14					26.98			
Oil	(lb/hr)		5034.69			5034.69				
Air	(lb/hr)			190.00	216.00			414.00		
Water Vapor	(lb/hr)			2.50	2.74			13.40		
Particulate	(lb/hr)									
Hydrochloric Acid	(lb/hr)									
Carbon Dioxide	(lb/hr)									
Oxygen	(lb/hr)									
Carbon Monoxide	(lb/hr)									
Propane	(lb/hr)									
Total Mass	(lb/hr)	265.00	5034.69	200.50	218.74	5034.69	256.91	427.41		
Average Temp	(°F)	79	106	207	81	100	334	100	1774	
Specific Heat/Heating Value	(Btu/lb)	19.90	79.06	63.53	32.01	78.54	36.69	59.76		
Heat Rate	(Btu/hr)	5297.52	402060.33	12717.22	7177.40	191970.96	9412.15	25541.02		-1143.64

Notes: BDL - Below Detection Level

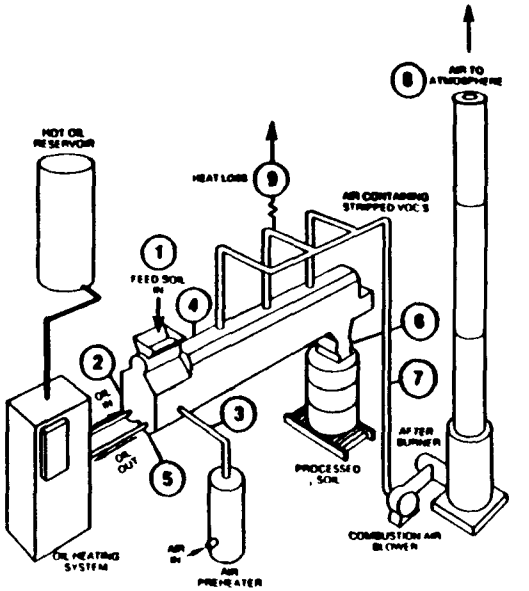

For Thermal Stripping of VOC's from Soil Pilot Study
At Letterkenny Army Depot (LEAD) Chambersburg PA

WESTON
WESTON WAY
WEST CHESTER PENNSYLVANIA 19380
PHONE 215 692 3030
TELEX 83 5348

FIGURE G-7 MATERIAL/ENERGY BALANCE FOR TEST RUN 7

Scale	None	Project Number	Drawing Number
Date	11/85	2281-01-11	

Stream Number		1	2	3	4	5	6	7	8	9
Description		Soil Feed	Oil Inlet	Process Air Inlet	Infil-tration Air	Oil Outlet	Soil Dis-charge	Off-Gas Dis-Charge	Stack Exhaust	Heat Loss
Inerts	(lb/hr)	200.99					200.95			
VOC's - Dichloroethylene	(lb/hr)	7.20×10^{-3}					3.00×10^{-2}	3.40×10^{-2}		
Trichloroethylene	(lb/hr)	4.09×10^{-1}					2.13×10^{-1}	2.76×10^{-1}		
Tetrachloroethylene	(lb/hr)	1.75×10^{-1}					9.70×10^{-2}	7.00×10^{-3}		
Xylene	(lb/hr)	2.15×10^{-2}					1.55×10^{-2}	6.00×10^{-3}		
Other VOC's	(lb/hr)	1.13×10^{-1}					3.13×10^{-1}	BDL		
Moisture	(lb/hr)	60.50					33.00			
Oil	(lb/hr)		4934.00			4934.00				
Air	(lb/hr)			186.00	234.00			420.00	524.00	
Water Vapor	(lb/hr)			2.60	3.20			33.30	50.05	
Particulate	(lb/hr)							4.10×10^{-2}	4.10×10^{-2}	
Hydrochloric Acid	(lb/hr)								7.52×10^{-1}	
Carbon Dioxide	(lb/hr)								55.00	
Oxygen	(lb/hr)								61.50	
Carbon Monoxide	(lb/hr)								BDL	
Propane	(lb/hr)									
Total Mass	(lb/hr)	250.25	4934.00	188.60	237.20	4934.00	262.60	433.76	692.94	
Average Temp	(°F)	81	190	84	84	175	120	100	1040	
Specific Heat/Heating Value	(Btu/lb)	22.12	82.65	15.06	35.11	74.72	35.10	50.99		
Heat Rate	(Btu/hr)	5535.00	407803.69	6612.96	8330.92	368676.30	8509.09	25505.36		25512.06

Notes. BDL - Below Detection Level

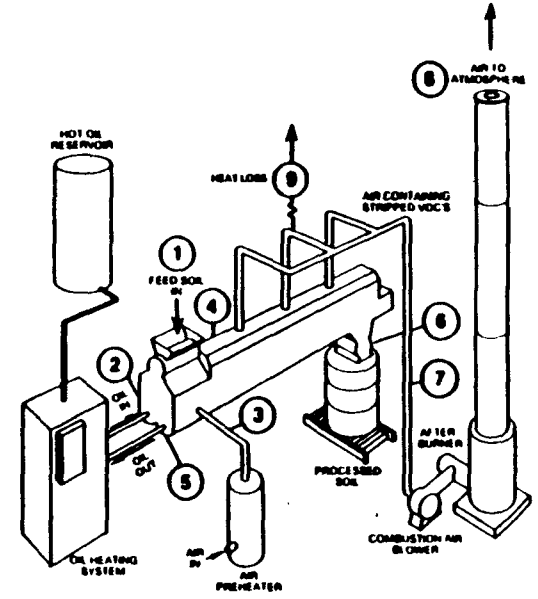

For Thermal Stripping of VOC s from Soil Pilot Study
At Letterkenny Army Depot (LEAD) Chambersburg PA

WESTON
WESTON WAY
WEST CHESTER PENNSYLVANIA 19380
PHONE 215 692 3030
TELEX 83 5340

FIGURE G-8 MATERIAL/ENERGY BALANCE FOR TEST RUN 8

Scale	None	Project Number	Drawing Number
Date	11/85	2281-01-11	

Stream Number		1	2	3	4	5	6	7	8	9
Description		Soil Feed	Oil Inlet	Process Air Inlet	Infil-tration Air	Oil Outlet	Soil Dis-charge	Off-Gas Dis-Charge	Stack Exhaust	Heat Loss
Inerts	(lb/hr)	104.74					104.72			
VOC's - Dichloroethylene	(lb/hr)	1.99×10^{-1}					2.94×10^{-3}	1.96×10^{-1}		
Trichloroethylene	(lb/hr)	4.47×10^{-1}					1.20×10^{-2}	8.35×10^{-1}		
Tetrachloroethylene	(lb/hr)	7.75×10^{-2}					6.47×10^{-3}	7.10×10^{-2}		
Xylene	(lb/hr)	2.39×10^{-2}					1.92×10^{-3}	2.00×10^{-2}		
Other VOC's	(lb/hr)	4.71×10^{-1}					7.10×10^{-4}	8.00×10^{-3}		
Moisture	(lb/hr)	38.27					11.35			
Oil	(lb/hr)		5206.42			5206.42				
Air	(lb/hr)			144.00	196.00			340.00	660.00	
Water Vapor	(lb/hr)			2.00	3.77			33.50	92.60	
Particulate	(lb/hr)							2.10×10^{-2}	2.10×10^{-2}	
Hydrochloric Acid	(lb/hr)								1.00	
Carbon Dioxide	(lb/hr)								51.90	
Oxygen	(lb/hr)								40.00	
Carbon Monoxide	(lb/hr)								BDL	
Propane	(lb/hr)									
Total Mass	(lb/hr)	223.77	5206.42	146.00	199.77	5206.42	196.30	374.25	656.32	
Average Temp	(°F)	80	406	200	91	464	219	216	1693	
Specific Heat/Heating Value	(Btu/lb)	24.07	279.30	71.22	42.31	261.95	52.15	150.37		
Heat Rate	(Btu/hr)	5185.30	1476511.91	10455.24	8456.14	1304758.85	10225.93	56276.91		49546.90

Notes BDL - Below Detection Level

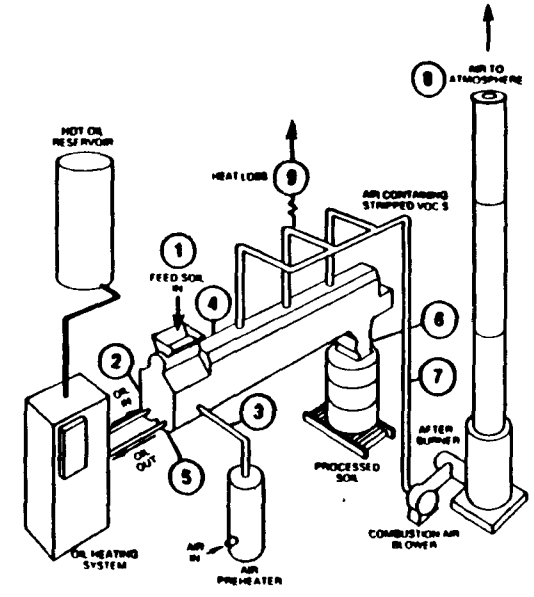

For Thermal Stripping of VOC's from Soil Pilot Study
At Letterkenny Army Depot (LEAD) Chambersburg, PA

WESTON
WESTON WAY
WEST CHESTER PENNSYLVANIA 19380
PHONE 215 692 3030
TELEX 83 5348

FIGURE G-9 MATERIAL/ENERGY BALANCE FOR TEST RUN 9

Scale	None	Project Number	Drawing Number
Date	11/85	2281-01-11	

Stream Number		1	2	3	4	5	6	7	8	9
Description		Soil Feed	Oil Inlet	Process Air Inlet	Infil-tration Air	Oil Outlet	Soil Dis-charge	Off-Gas Dis-Charge	Stack Exhaust	Heat Loss
Inerts	(lb/hr)	133.40					113.37			
VOC's - Dichloroethylene	(lb/hr)	0.54×10^{-2}					0.28×10^{-5}	0.53×10^{-2}		
Trichloroethylene	(lb/hr)	1.90×10^{-1}					2.04×10^{-4}	3.90×10^{-1}		
Tetrachloroethylene	(lb/hr)	2.07×10^{-1}					1.59×10^{-4}	2.07×10^{-1}		
Xylene	(lb/hr)	3.96					6.26×10^{-5}	3.962		
Other VOC's	(lb/hr)	5.70×10^{-3}					BDL	5.70×10^{-3}		
Moisture	(lb/hr)	27.63					0.11			
Oil	(lb/hr)		5890.59			5890.59				
Air	(lb/hr)			163.00	177.00			340.00	400.00	
Water Vapor	(lb/hr)			2.90	3.10			33.60	60.75	
Particulate	(lb/hr)							3.20×10^{-2}	3.20×10^{-2}	
Hydrochloric Acid	(lb/hr)								1.55	
Carbon Dioxide	(lb/hr)								54.90	
Oxygen	(lb/hr)								46.70	
Carbon Monoxide	(lb/hr)								BDL	
Propane	(lb/hr)									
Total Mass	(lb/hr)	165.60	5890.59	165.90	180.10	5890.59	113.48	378.28	103.10	
Average Temp	(°F)	86	670	192	91	450	318	196	1796	
Specific Heat/Heating Value	(Btu/lb)	23.57	272.70	65.49	41.02	256.66	63.74	144.06		
Heat Rate	(Btu/hr)	3933.85	1606153.66	10865.47	7390.62	1511987.10	7233.33	54495.69		54487.47

Notes BDL - Below Detection Level

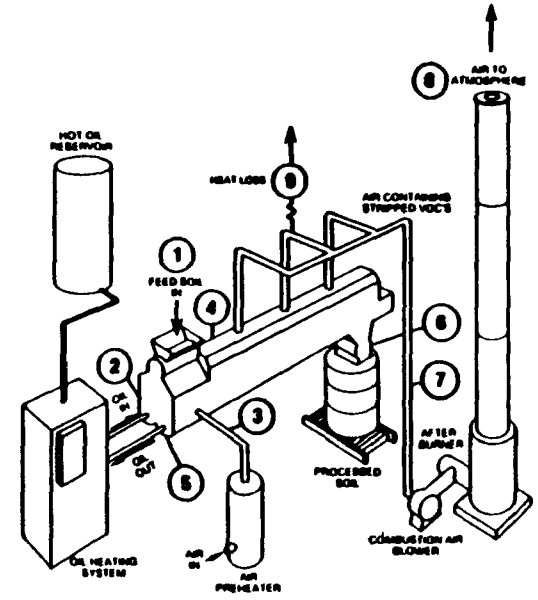

For Thermal Stripping of VOC's from Soil Pilot Study
At Letterkenny Army Depot (LEAD) Chambersburg, PA

WESTON
WESTON WAY
WEST CHESTER PENNSYLVANIA 19380
PHONE 215 692 3030
TELEX 83 5340

FIGURE G-10 MATERIAL/ENERGY BALANCE FOR TEST RUN 10

Scale	None	Project Number	Drawing Number
Date	11/85	2281-01-11	

Stream Number		1	2	3	4	5	6	7	8	9
Description		Soil Feed	Oil Inlet	Process Air Inlet	Infil-tration Air	Oil Outlet	Soil Dis-charge	Off-Gas Dis-Charge	Stack Exhaust	Heat Loss
Inerts	(lb/hr)	242.27					242.27			
VOC's - Dichloroethylene	(lb/hr)	6.03×10^{-2}					3.16×10^{-4}	6.00×10^{-2}		
Trichloroethylene	(lb/hr)	6.17×10^{-1}					5.10×10^{-4}	6.16×10^{-1}		
Tetrachloroethylene	(lb/hr)	1.00×10^{-1}					3.16×10^{-4}	1.00×10^{-1}		
Xylene	(lb/hr)	1.71×10^{-2}					4.62×10^{-5}	1.70×10^{-2}		
Other VOC's	(lb/hr)	5.19×10^{-1}					1.00×10^{-4}	5.00×10^{-1}		
Moisture	(lb/hr)	15.57					0.73			
Oil	(lb/hr)		4033.30			4033.30				
Air	(lb/hr)			140.00	237.00			377.00		
Water Vapor	(lb/hr)			2.20	3.76			20.00		
Particulate	(lb/hr)									
Hydrochloric Acid	(lb/hr)									
Carbon Dioxide	(lb/hr)									
Oxygen	(lb/hr)									
Carbon Monoxide	(lb/hr)									
Propane	(lb/hr)									
Total Mass	(lb/hr)	258.74	4033.30	142.20	240.76	4033.30	243.00	398.69		
Average Temp	(°F)	80	504	200	70	449	290	214	3647	
Specific Heat/Heating Value	(Btu/lb)	19.79	294.69	67.26	35.73	265.20	56.02	100.84		
Heat Rate	(Btu/hr)	5120.73	1424126.34	9564.03	8602.50	1281795.17	13709.67	43392.29		100717.67

Notes BDL - Below Detection Level

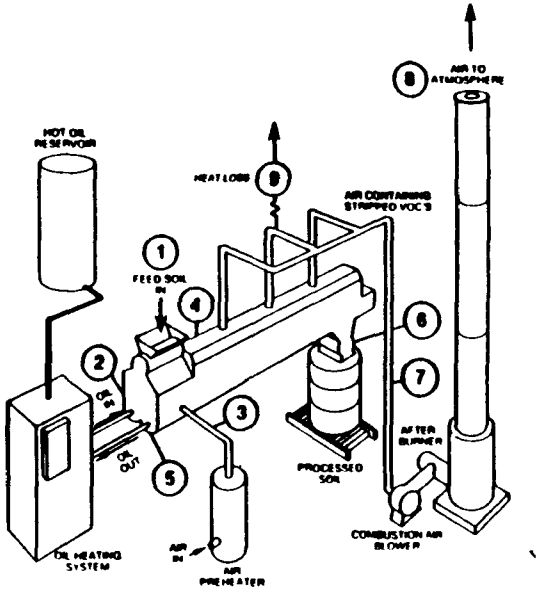

For Thermal Stripping of VOC's from Soil Pilot Study
At Letterkenny Army Depot (LEAD) Chambersburg, PA

WESTON
WESTON WAY
WEST CHESTER PENNSYLVANIA 19380
PHONE 215 692 3030
TELEX 83 5398

FIGURE G-11 MATERIAL/ENERGY BALANCE FOR TEST RUN 11

Scale	None	Project Number	Drawing Number
Date	11/85	2281-01-11	

Stream Number		1	2	3	4	5	6	7	8	9
Description		Soil Feed	Oil Inlet	Process Air Inlet	Infil-tration Air	Oil Outlet	Soil Dis-charge	Off-Gas Dis-Charge	Stack Exhaust	Heat Loss
Inerts	(lb/hr)	110.54					110.54			
VOC's - Dichloroethylene	(lb/hr)	6.72×10^{-2}					2.36×10^{-6}	6.70×10^{-2}		
Trichloroethylene	(lb/hr)	3.40×10^{-1}					1.35×10^{-3}	3.39×10^{-2}		
Tetrachloroethylene	(lb/hr)	1.79×10^{-1}					3.05×10^{-3}	1.76×10^{-1}		
Xylene	(lb/hr)	2.39×10^{-2}					8.46×10^{-6}	2.30×10^{-2}		
Other VOC's	(lb/hr)	9.27×10^{-3}					1.69×10^{-6}	9.10×10^{-3}		
Moisture	(lb/hr)	31.21					2.25			
Oil	(lb/hr)		5236.00			5236.00				
Air	(lb/hr)			171.00	145.00			316.00		
Water Vapor	(lb/hr)			2.00	1.74			32.70		
Particulate	(lb/hr)									
Hydrochloric Acid	(lb/hr)									
Carbon Dioxide	(lb/hr)									
Oxygen	(lb/hr)									
Carbon Monoxide	(lb/hr)									
Propane	(lb/hr)									
Total Mass	(lb/hr)	142.37	5236.00	173.00	146.74	5236.00	112.80	349.31		
Average Temp	(°F)	81	559	203	81	517	290	344	1609	
Specific Heat/Heating Value	(Btu/lb)	23.35	340.71	61.64	32.14	305.23	61.99	162.18		
Heat Rate	(Btu/hr)	1124.81	1783968.90	10663.30	4716.21	1598193.30	6992.57	56652.99		148836.30

Notes. BDL - Below Detection Level

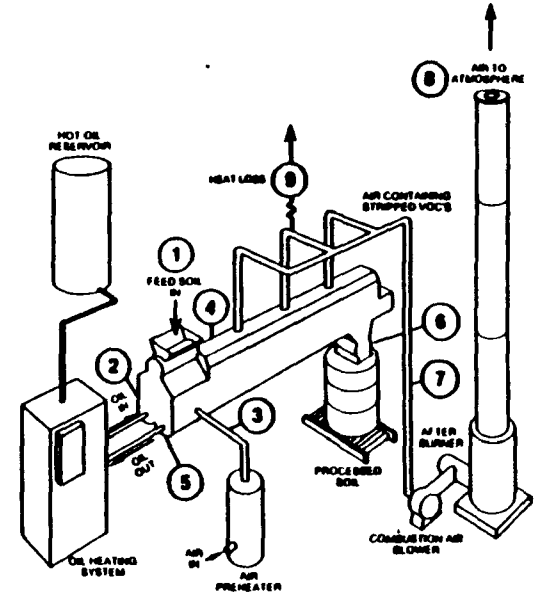

For Thermal Stripping of VOC's from Soil Pilot Study
At Letterkenny Army Depot (LEAD) Chambersburg PA

WESTON
WESTON WAY
WEST CHESTER PENNSYLVANIA 19380
PHONE 215 692 3030
TELEX 83 5340

FIGURE G-12 MATERIAL/ENERGY BALANCE FOR TEST RUN 12

Scale	None	Project Number	Drawing Number
Date	11/85	2281 01-11	

Stream Number		1	2	3	4	5	6	7	8	9
Description		Soil Feed	Oil Inlet	Process Air Inlet	Infil-tration Air	Oil Outlet	Soil Dis-charge	Off-Gas Dis-Charge	Stack Exhaust	Heat Loss
Inerts	(lb/hr)	160.20					160.20			
VOC's - Dichloroethylene	(lb/hr)	4.41×10^{-2}					9.10×10^{-5}	4.40×10^{-2}		
Trichloroethylene	(lb/hr)	6.71×10^{-2}					9.31×10^{-5}	6.20×10^{-2}		
Tetrachloroethylene	(lb/hr)	2.10×10^{-2}					0.66×10^{-6}	2.10×10^{-2}		
Xylene	(lb/hr)	6.01×10^{-1}					0.02×10^{-6}	6.00×10^{-1}		
Other VOC's	(lb/hr)	2.19×10^{-1}					1.00×10^{-4}	2.00×10^{-1}		
Moisture	(lb/hr)	10.17					0.16			
Oil	(lb/hr)		4229.14			4229.14				
Air	(lb/hr)			203.00	170.00			173.00		
Water Vapor	(lb/hr)			1.00	2.49			23.70		
Particulate	(lb/hr)									
Hydrochloric Acid	(lb/hr)									
Carbon Dioxide	(lb/hr)									
Oxygen	(lb/hr)									
Carbon Monoxide	(lb/hr)									
Propane	(lb/hr)									
Total Mass	(lb/hr)	170.79	4229.14	206.00	172.49	4229.14	160.46	396.84		
Average Temp	(°F)	76	656	79	79	600	367	189	1627	
Specific Heat/Heating Value	(Btu/lb)	18.16	255.25	30.59	30.45	262.17	69.75	110.09		
Heat Rate	(Btu/hr)	1246.00	1079503.21	7126.14	5962.85	024177.60	11189.96	44085.00		16445.56

Notes BDL - Below Detection Level

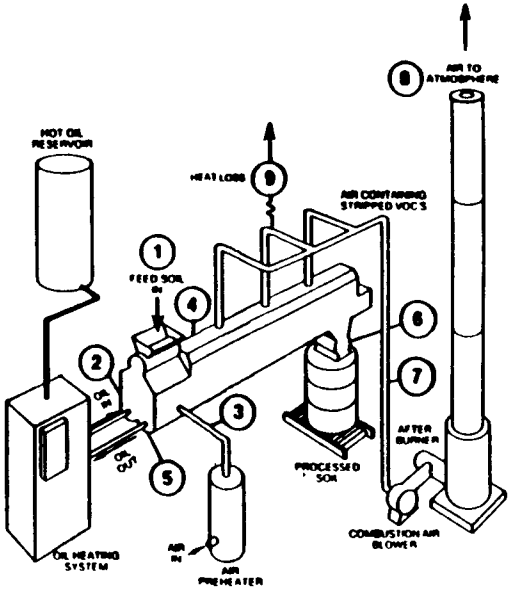

For Thermal Stripping of VOC's from Soil Pilot Study
At Letterkenny Army Depot (LEAD) Chambersburg PA

WESTON
WESTON WAY
WEST CHESTER PENNSYLVANIA 19380
PHONE 215 692 3030
TELEX 83 5340

FIGURE G-13 MATERIAL/ENERGY BALANCE FOR TEST RUN 13

Scale	None	Project Number	Drawing Number
Date	11/85	2281-01-11	

Stream Number		1	2	3	4	5	6	7	8	9
Description		Soil Feed	Oil Inlet	Process Air Inlet	Infil-tration Air	Oil Outlet	Soil Dis-charge	Off-Gas Dis-Charge	Stack Exhaust	Heat Loss
Inerts	(lb/hr)	152.67					152.67			
VOC's - Dichloroethylene	(lb/hr)	7.51×10^{-2}					1.18×10^{-4}	7.50×10^{-2}		
Trichloroethylene	(lb/hr)	3.56×10^{-1}					3.21×10^{-5}	3.56×10^{-1}		
Tetrachloroethylene	(lb/hr)	2.30×10^{-2}					BDL	2.30×10^{-2}		
Xylene	(lb/hr)	1.00×10^{-2}					6.27×10^{-6}	1.00×10^{-2}		
Other VOC's	(lb/hr)	4.15×10^{-3}					3.50×10^{-4}	4.00×10^{-3}		
Moisture	(lb/hr)	29.83					0.15			
Oil	(lb/hr)		6531.22			6531.22				
Air	(lb/hr)			200.00	230.00			430.00		
Water Vapor	(lb/hr)			2.50	2.92			35.10		
Particulate	(lb/hr)									
Hydrochloric Acid	(lb/hr)									
Carbon Dioxide	(lb/hr)									
Oxygen	(lb/hr)									
Carbon Monoxide	(lb/hr)									
Propane	(lb/hr)									
Total Mass	(lb/hr)	182.98	6531.22	202.50	232.92	6531.22	152.82	465.50		
Average Temp	(°F)	73	695	77	77	440	300	183	1627	
Specific Heat/Heating Value	(Btu/lb)	18.90	287.06	31.77	31.97	251.06	69.77	126.60		
Heat Rate	(Btu/hr)	3450.60	1300713.51	6432.96	7446.06	1137609.56	10663.97	58980.61		118799.03

Notes BDL - Below Detection Level

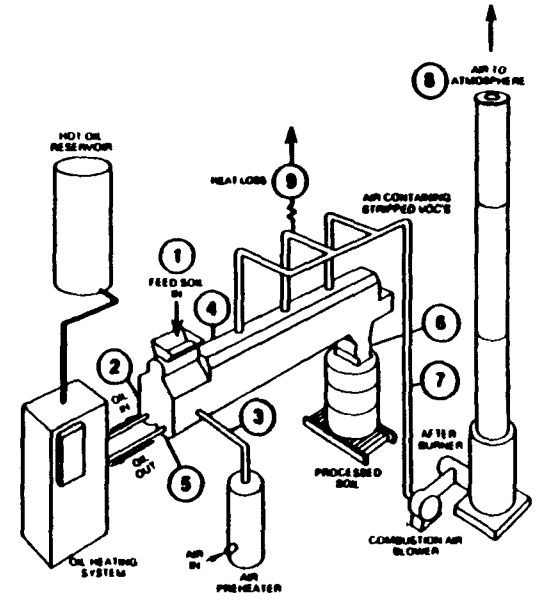

For Thermal Stripping of VOC's from Soil Pilot Study
At Letterkenny Army Depot (LEAD) Chambersburg PA

WESTON
WESTON WAY
WEST CHESTER PENNSYLVANIA 19380
PHONE 215 692 3030
TELEX 83 5348

FIGURE G-14 MATERIAL/ENERGY BALANCE FOR TEST RUN 14

Scale	None	Project Number	Drawing Number
Date	11/85	2281-01-11	

Stream Number		1	2	3	4	5	6	7	8	9
Description		Soil Feed	Oil Inlet	Process Air Inlet	Infil-tration Air	Oil Outlet	Soil Dis-charge	Off-Gas Dis-Charge	Stack Exhaust	Heat Loss
Inerts	(lb/hr)	146.41					146.41			
VOC's - Dichloroethylene	(lb/hr)	1.53×10^{-1}					1.63×10^{-4}	1.53×10^{-1}		
Trichloroethylene	(lb/hr)	4.01×10^{-1}					1.04×10^{-3}	4.00×10^{-1}		
Tetrachloroethylene	(lb/hr)	2.48×10^{-1}					4.29×10^{-3}	2.44×10^{-1}		
Xylene	(lb/hr)	3.40×10^{-2}					9.67×10^{-4}	3.30×10^{-2}		
Other VOC's	(lb/hr)	0.19×10^{-3}					1.93×10^{-4}	0.00×10^{-3}		
Moisture	(lb/hr)	34.00					1.47			
Oil	(lb/hr)		3776.02			3776.02				
Air	(lb/hr)			192.00	186.00			378.00		
Water Vapor	(lb/hr)			2.40	2.37			37.30		
Particulate	(lb/hr)									
Hydrochloric Acid	(lb/hr)									
Carbon Dioxide	(lb/hr)									
Oxygen	(lb/hr)									
Carbon Monoxide	(lb/hr)									
Propane	(lb/hr)									
Total Mass	(lb/hr)	181.33	3776.02	194.40	188.37	3776.02	147.89	416.22		
Average Temp	(°F)	75.00	574	75	75	510	205	207	1666	
Specific Heat/Heating Value	(Btu/lb)	20.16	353.21	31.33	31.50	298.54	50.87	148.15		
Heat Rate	(Btu/hr)	3656.17	1331720.59	6090.09	5949.16	1127300.95	8706.10	61664.33		151736.55

Notes: BDL - Below Detection Level

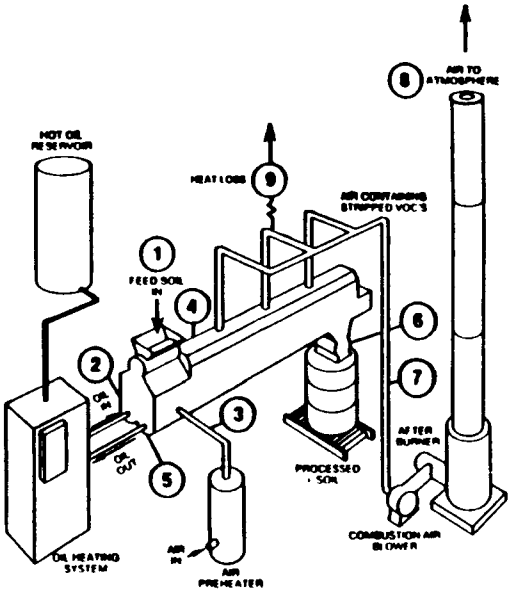

For Thermal Stripping of VOC's from Soil Pilot Study
At Letterkenny Army Depot (LEAD) Chambersburg PA

WESTON
WESTON WAY
WEST CHESTER PENNSYLVANIA 19380
PHONE 215 692 3030
TELEX 83 5340

FIGURE G-15 MATERIAL/ENERGY BALANCE FOR TEST RUN 15

Scale	None	Project Number	Drawing Number
Date	11/85	2281-01-11	

Stream Number		1	2	3	4	5	6	7	8	9
Description		Soil Feed	Oil Inlet	Process Air Inlet	Infil-tration Air	Oil Outlet	Soil Dis-charge	Off-Gas Dis-Charge	Stack Exhaust	Heat Loss
Inerts	(lb/hr)	190.94					190.94			
VOC's - Dichloroethylene	(lb/hr)	1.16×10^{-1}					BDL	1.16×10^{-1}		
Trichloroethylene	(lb/hr)	5.15×10^{-1}					BDL	5.15×10^{-1}		
Tetrachloroethylene	(lb/hr)	3.20×10^{-1}					BDL	3.20×10^{-1}		
Xylene	(lb/hr)	3.09×10^{-2}					0.53×10^{-4}	3.00×10^{-2}		
Other VOC's	(lb/hr)	5.00×10^{-2}					BDL	5.00×10^{-2}		
Moisture	(lb/hr)	42.29					9.16			
Oil	(lb/hr)		6494.75			6494.75				
Air	(lb/hr)			207.04	215.00			422.00		
Water Vapor	(lb/hr)			2.10	2.17			37.40		
Particulate	(lb/hr)									
Hydrochloric Acid	(lb/hr)									
Carbon Dioxide	(lb/hr)									
Oxygen	(lb/hr)									
Carbon Monoxide	(lb/hr)									
Propane	(lb/hr)									
Total Mass	(lb/hr)	242.21	6494.75	209.10	217.17	6494.75	200.10	460.30		
Average Temp	(°F)	73	426	73	73	403	204	170	1621	
Specific Heat/Heating Value	(Btu/lb)	19.11	232.34	20.42	20.30	215.63	66.51	131.64		
Heat Rate	(Btu/hr)	4620.19	1500976.32	5940.03	6153.69	1400481.26	9677.03	60606.37		54912.97

Notes BDL - Below Detection Level

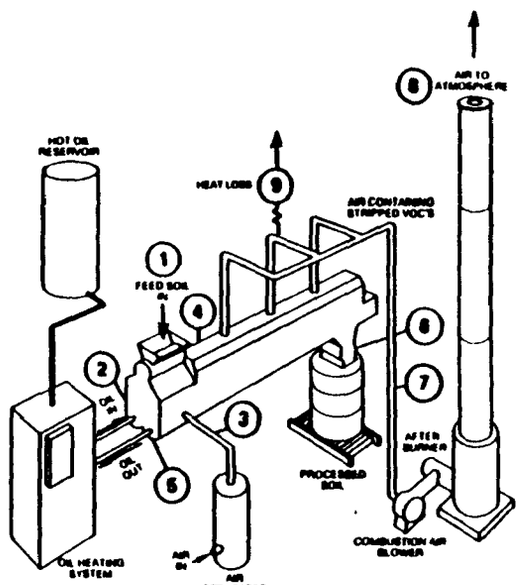

For Thermal Stripping of VOC's from Soil Pilot Study
At Letterkenny Army Depot (LEAD) Chambersburg, PA

WESTON
WESTON WAY
WEST CHESTER PENNSYLVANIA 19380
PHONE 215 692 3030
TELEX 83 5346

FIGURE G-16 MATERIAL/ENERGY BALANCE FOR TEST RUN 16

Scale	None	Project Number	Drawing Number
Date	11/85	2281-01-11	

Stream Number		1	2	3	4	5	6	7	8	9
Description		Soil Feed	Oil Inlet	Process Air Inlet	Infil-tration Air	Oil Outlet	Soil Dis-charge	Off-Gas Dis-Charge	Stack Exhaust	Heat Loss
Inerts	(lb/hr)	114.91					114.91			
VOC's - Dichloroethylene	(lb/hr)	2.90×10^{-2}					BDL	2.90×10^{-2}		
Trichloroethylene	(lb/hr)	1.79×10^{-1}					BDL	1.79×10^{-1}		
Tetrachloroethylene	(lb/hr)	2.16×10^{-1}					BDL	2.16×10^{-1}		
Xylene	(lb/hr)	2.00×10^{-3}					1.15×10^{-6}	2.00×10^{-3}		
Other VOC's	(lb/hr)	BDL					BDL	BDL		
Moisture	(lb/hr)	26.17					0.35			
Oil	(lb/hr)		4400.07			4400.07				
Air	(lb/hr)			197.00	263.00			460.00		
Water Vapor	(lb/hr)			2.50	3.00			31.40		
Particulate	(lb/hr)									
Hydrochloric Acid	(lb/hr)									
Carbon Dioxide	(lb/hr)									
Oxygen	(lb/hr)									
Carbon Monoxide	(lb/hr)									
Propane	(lb/hr)									
Total Mass	(lb/hr)	141.50	4400.07	199.50	266.00	4400.07	115.26	671.02		
Average Temp	(°F)	60	401	73	73	376	250	169	1664	
Specific Heat/Heating Value	(Btu/lb)	17.77	215.40	31.09	31.09	195.16	50.02	113.32		
Heat Rate	(Btu/hr)	2514.11	965512.22	6202.71	7646.94	875298.36	5811.70	53666.03		67320.11

Notes: BDL - Below Detection Level

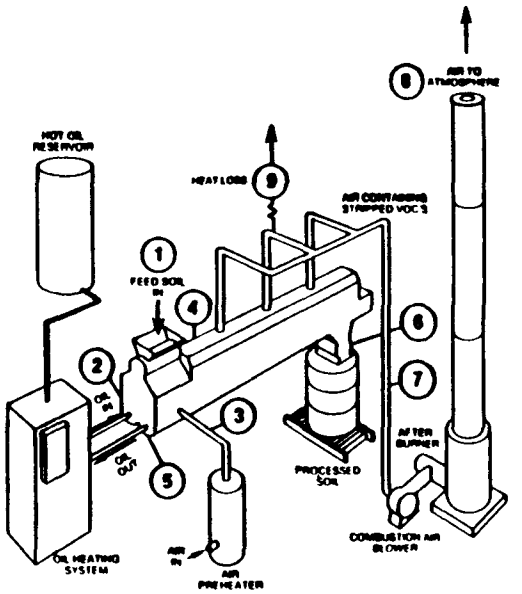

For Thermal Stripping of VOC's from Soil Pilot Study
At Letterkenny Army Depot (LEAD) Chambersburg, PA

WESTON
WESTON WAY
WEST CHESTER PENNSYLVANIA 19380
PHONE 215 692 3030
TELEX 83 5348

FIGURE G-17 MATERIAL/ENERGY BALANCE FOR TEST RUN 17

Scale	None	Project Number	Drawing Number
Date	11/85	2281-01-11	

Stream Number		1	2	3	4	5	6	7	8	9
Description		Soil Feed	Oil Inlet	Process Air Inlet	Infil-tration Air	Oil Outlet	Soil Dis-charge	Off-Gas Dis-Charge	Stack Exhaust	Heat Loss
Inerts	(lb/hr)	101.75					101.75			
VOC's - Dichloroethylene	(lb/hr)	2.00×10^{-3}					7.91×10^{-5}	2.00×10^{-3}		
Trichloroethylene	(lb/hr)	7.04×10^{-6}					4.16×10^{-6}	7.00×10^{-6}		
Tetrachloroethylene	(lb/hr)	2.02×10^{-3}					1.49×10^{-5}	2.00×10^{-3}		
Xylene	(lb/hr)	1.06×10^{-3}					5.65×10^{-5}	1.00×10^{-3}		
Other VOC's	(lb/hr)	2.06×10^{-3}					5.50×10^{-5}	2.00×10^{-3}		
Moisture	(lb/hr)	32.41					6.59			
Oil	(lb/hr)		6732.61			6732.61				
Air	(lb/hr)			212.00	203.00			615.00		
Water Vapor	(lb/hr)			3.10	2.90			31.90		
Particulate	(lb/hr)									
Hydrochloric Acid	(lb/hr)									
Carbon Dioxide	(lb/hr)									
Oxygen	(lb/hr)									
Carbon Monoxide	(lb/hr)									
Propane	(lb/hr)									
Total Mass	(lb/hr)	214.17	6732.61	215.10	205.90	6732.61	108.14	646.91		
Average Temp	(°F)	74	292	210	81	201	151	144	1606	
Specific Heat/Heating Value	(Btu/lb)	18.09	168.06	66.59	36.91	133.63	33.30	112.25		
Heat Rate	(Btu/hr)	4045.44	662054.66	14312.52	7191.24	632199.98	6206.15	50163.20		-445.55

Notes: BDL - Below Detection Level

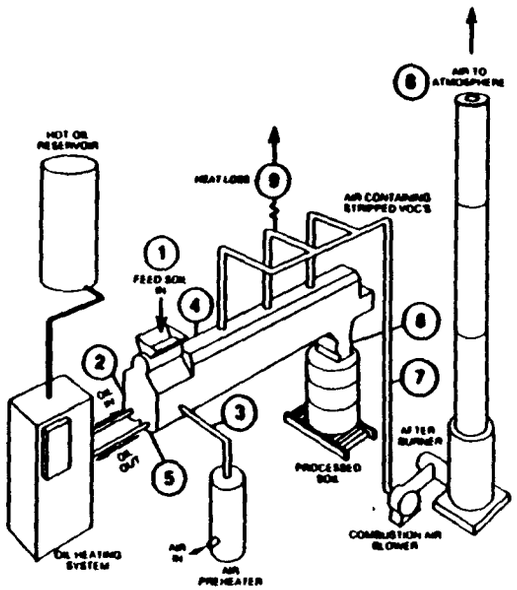

For Thermal Stripping of VOC's from Soil Pilot Study
At Letterkenny Army Depot (LEAD) Chambersburg PA

WESTON
WESTON WAY
WEST CHESTER PENNSYLVANIA 19380
PHONE 215 692 3030
TELEX 83 5340

FIGURE G-18 MATERIAL/ENERGY BALANCE FOR TEST RUN 18

Scale	None	Project Number	Drawing Number
Date	11/85	2281-01-11	

Stream Number		1	2	3	4	5	6	7	8	9
Description		Soil Feed	Oil Inlet	Process Air Inlet	Infil-tration Air	Oil Outlet	Soil Dis-charge	Off-Gas Dis-Charge	Stack Exhaust	Heat Loss
Inerts	(lb/hr)	195.12					195.12			
VOC's - Dichloroethylene	(lb/hr)	6.47×10^{-4}					4.72×10^{-5}	6.00×10^{-4}		
Trichloroethylene	(lb/hr)	5.93×10^{-4}					1.93×10^{-4}	4.00×10^{-4}		
Tetrachloroethylene	(lb/hr)	2.95×10^{-5}					2.95×10^{-5}	BDL		
Xylene	(lb/hr)	2.52×10^{-3}					1.65×10^{-5}	2.50×10^{-3}		
Other VOC's	(lb/hr)	1.67×10^{-3}					2.65×10^{-4}	1.40×10^{-3}		
Moisture	(lb/hr)	36.40					1.57			
Oil	(lb/hr)		6291.36			6291.36				
Air	(lb/hr)			170.00	206.00			376.00		
Water Vapor	(lb/hr)			2.00	2.40			39.30		
Particulate	(lb/hr)									
Hydrochloric Acid	(lb/hr)									
Carbon Dioxide	(lb/hr)									
Oxygen	(lb/hr)									
Carbon Monoxide	(lb/hr)									
Propane	(lb/hr)									
Total Mass	(lb/hr)	211.53	6291.36	172.00	208.40	6291.36	196.69	415.30		
Average Temp	(°F)	70	559	205	81	540	435	230	1693	
Specific Heat/Heating Value	(Btu/lb)	20.42	140.70	62.15	32.14	324.00	89.60	160.66		
Heat Rate	(Btu/hr)	4726.70	2144122.45	10608.94	6701.26	2039033.54	17622.57	66721.10		42860.14

Notes BDL - Below Detection Level

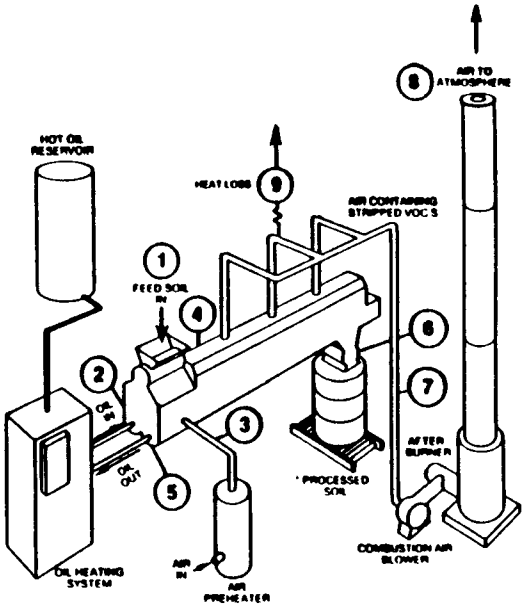

For Thermal Stripping of VOC's from Soil Pilot Study
At Letterkenny Army Depot (LEAD) Chambersburg PA

WESTON
WESTON WAY
WEST CHESTER, PENNSYLVANIA 19380
PHONE 215 692 3030
TELEX 83 5348

FIGURE G-19 MATERIAL/ENERGY BALANCE FOR TEST RUN 19

Scale	None	Project Number	Drawing Number
Date	11/85	2281-01-11	

Stream Number		1	2	3	4	5	6	7	8	9
Description		Soil Feed	Oil Inlet	Process Air Inlet	Infil-tration Air	Oil Outlet	Soil Dis-charge	Off-Gas Dis-Charge	Stack Exhaust	Heat Loss
Inerts	(lb/hr)	131.47					131 47			
VOC's - Dichloroethylene	(lb/hr)	4.00×10^{-4}					BDL	4.00×10^{-4}		
Trichloroethylene	(lb/hr)	2.01×10^{-4}					9.21×10^{-7}	2.00×10^{-4}		
Tetrachloroethylene	(lb/hr)	BDL					BDL	BDL		
Xylene	(lb/hr)	2.00×10^{-3}					$3 16 \times 10^{-6}$	$2 00 \times 10^{-3}$		
Other VOC's	(lb/hr)	$2 77 \times 10^{-4}$					$6 94 \times 10^{-5}$	2.70×10^{-3}		
Moisture	(lb/hr)	22.90					0.33			
Oil	(lb/hr)		6565 10			6565 10				
Air	(lb/hr)			173 00	217.00			390 00		
Water Vapor	(lb/hr)			1 90	2.33			27 00		
Particulate	(lb/hr)									
Hydrochloric Acid	(lb/hr)									
Carbon Dioxide	(lb/hr)									
Oxygen	(lb/hr)									
Carbon Monoxide	(lb/hr)									
Propane	(lb/hr)									
Total Mass	(lb/hr)	154 30	6565 10	174.90	219 33	6565.10	131 60	617 01		
Average Temp	(°F)	70	570	205	82	555	825	220	3666	
Specific Heat/Heating Value	(Btu/lb)	20 17	350 55	61.31	11 23	335.70	85 22	126 41		
Heat Rate	(Btu/hr)	3165 10	2294392 86	10723 09	6050 59	2197712 63	11215.26	52713 12		53470 83

Notes: BDL - Below Detection Level

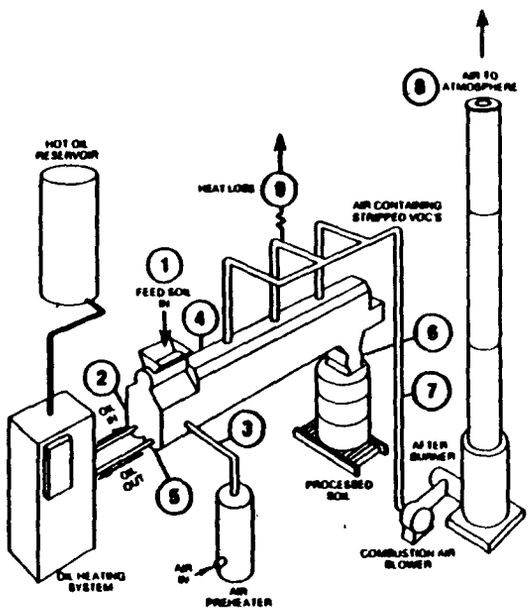

For Thermal Stripping of VOC's from Soil Pilot Study
At Letterkenny Army Depot (LEAD) Chambersburg PA

WESTON
WESTON WAY
WEST CHESTER PENNSYLVANIA 19380
PHONE 215 692 3030
TELEX 83 5340

FIGURE G-20 MATERIAL/ENERGY BALANCE FOR TEST RUN 20

Scale	None	Project Number	Drawing Number
Date	11/85	2281-01-11	

Stream Number		1	2	3	4	5	6	7	8	9
Description		Soil Feed	Oil Inlet	Process Air Inlet	Infil-tration Air	Oil Outlet	Soil Dis-charge	Off-Gas Dis-Charge	Stack Exhaust	Heat Loss
Inerts	(lb/hr)	152.75					152.75			
VOC's - Dichloroethylene	(lb/hr)	BDL					BDL	BDL		
Trichloroethylene	(lb/hr)	1.85×10^{-6}					1.85×10^{-6}	BDL		
Tetrachloroethylene	(lb/hr)	BDL					BDL	BDL		
Xylene	(lb/hr)	2.31×10^{-1}					5.55×10^{-6}	2.30×10^{-1}		
Other VOC's	(lb/hr)	1.04×10^{-1}					4.29×10^{-5}	1.00×10^{-1}		
Moisture	(lb/hr)	42.45					1.39			
Oil	(lb/hr)		6444.40			6444.40				
Air	(lb/hr)			151.00	296.00			437.00		
Water Vapor	(lb/hr)			2.10	4.00			47.20		
Particulate	(lb/hr)									
Hydrochloric Acid	(lb/hr)									
Carbon Dioxide	(lb/hr)									
Oxygen	(lb/hr)									
Carbon Monoxide	(lb/hr)									
Propane	(lb/hr)									
Total Mass	(lb/hr)	195.25	6444.40	153.10	290.00	6444.00	154.14	484.21		
Average Temp	(°F)	77	571	200	84	563	451	263	1665	
Specific Heat/Heating Value	(Btu/lb)	21.90	351.07	65.32	35.07	343.62	91.23	166.12		
Heat Rate	(Btu/hr)	4275.50	2262445.30	10000.56	10171.45	2214403.20	14370.56	80030.67		-22319.54

Notes BDL - Below Detection Level

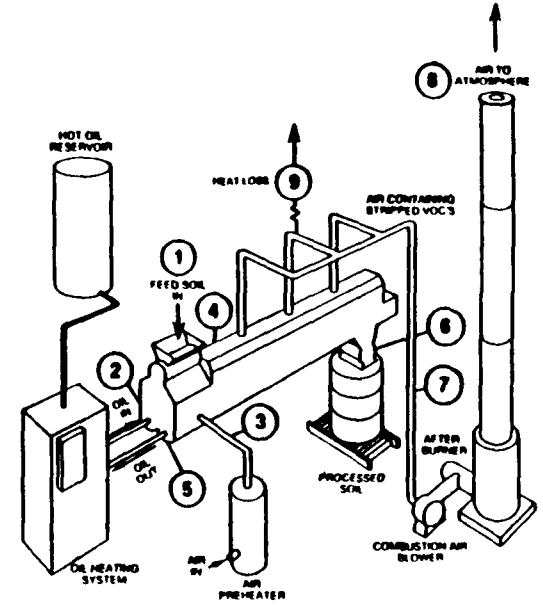

For Thermal Stripping of VOC's from Soil Pilot Study
At Letterkenny Army Depot (LEAD) Chambersburg PA

WESTON
WESTON WAY
WEST CHESTER PENNSYLVANIA 19380
PHONE 215 692 3030
TELEX 83 5340

FIGURE G-21 MATERIAL/ENERGY BALANCE FOR TEST RUN 21

Scale	None	Project Number	Drawing Number
Date	11/85	2281-01-11	

Stream Number		1	2	3	4	5	6	7	8	9
Description		Soil Feed	Oil Inlet	Process Air Inlet	Infil-tration Air	Oil Outlet	Soil Dis-charge	Off-Gas Dis-Charge	Stack Exhaust	Heat Loss
Inerts	(lb/hr)	141.29					141.29			
VOC's - Dichloroethylene	(lb/hr)	BDL					BDL	BDL		
Trichloroethylene	(lb/hr)	2.83×10^{-5}					2.83×10^{-3}	BDL		
Tetrachloroethylene	(lb/hr)	3.60×10^{-6}					3.60×10^{-6}	BDL		
Xylene	(lb/hr)	6.71×10^{-5}					7.22×10^{-6}	6.70×10^{-3}		
Other VOC's	(lb/hr)	3.60×10^{-5}					1.04×10^{-4}	3.50×10^{-3}		
Moisture	(lb/hr)	24.64					0.14			
Oil	(lb/hr)		4003.65			4003.65				
Air	(lb/hr)			163.00	268.00			431.00		
Water Vapor	(lb/hr)			2.50	4.10			33.10		
Particulate	(lb/hr)									
Hydrochloric Acid	(lb/hr)									
Carbon Dioxide	(lb/hr)									
Oxygen	(lb/hr)									
Carbon Monoxide	(lb/hr)									
Propane	(lb/hr)									
Total Mass	(lb/hr)	165.94	4003.65	165.50	272.10	4003.65	141.43	462.11		
Average Temp	(°F)	80	410	205	90	406	206	169	1699	
Specific Heat/Heating Value	(Btu/lb)	23.29	235.23	65.97	37.75	217.34	53.34	114.20		
Heat Rate	(Btu/hr)	1865.16	1140774.16	10918.00	10271.52	1062399.45	8210.00	52772.78		51544.51

Notes. BDL - Below Detection Level

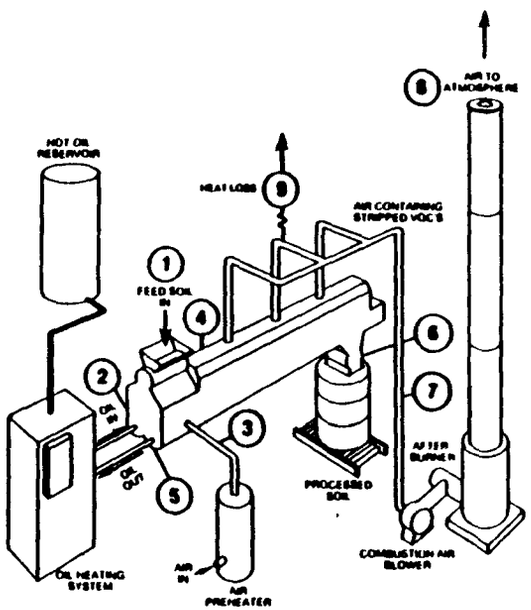

For Thermal Stripping of VOC's from Soil Pilot Study
At Letterkenny Army Depot (LEAD) Chambersburg, PA

WESTON
WESTON WAY
WEST CHESTER PENNSYLVANIA 19380
PHONE 215 692 3030
TELEX 83 5340

FIGURE G-22 MATERIAL/ENERGY BALANCE FOR TEST RUN 22

Scale	Project Number	Drawing Number
None	2281-01-11	
Date 11/85		

Stream Number		1	2	3	4	5	6	7	8	9
Description		Soil Feed	Oil Inlet	Process Air Inlet	Infil-tration Air	Oil Outlet	Soil Dis-charge	Off-Gas Dis-Charge	Stack Exhaust	Heat Loss
Inerts	(lb/hr)	96.20					96.20			
VOC's - Dichloroethylene	(lb/hr)	9.71×10^{-7}					9.71×10^{-7}	BDL		
Trichloroethylene	(lb/hr)	1.55×10^{-5}					1.55×10^{-5}	BDL		
Tetrachloroethylene	(lb/hr)	1.55×10^{-6}					1.55×10^{-6}	BDL		
Xylene	(lb/hr)	6.51×10^{-3}					1.36×10^{-5}	6.50×10^{-3}		
Other VOC's	(lb/hr)	3.74×10^{-3}					1.39×10^{-4}	3.60×10^{-3}		
Moisture	(lb/hr)	16.01					0.78			
Oil	(lb/hr)		4430.53			4430.53				
Air	(lb/hr)			160.00	196.00			356.00		
Water Vapor	(lb/hr)			2.30	2.07			20.40		
Particulate	(lb/hr)									
Hydrochloric Acid	(lb/hr)									
Carbon Dioxide	(lb/hr)									
Oxygen	(lb/hr)									
Carbon Monoxide	(lb/hr)									
Propane	(lb/hr)									
Total Mass	(lb/hr)	112.30	4430.53	162.30	198.07	4430.53	97.06	376.41		
Average Temp	(°F)	84	431	200	91	410	302	172	1681	
Specific Heat/Heating Value	(Btu/lb)	21.75	235.01	65.02	37.40	221.64	62.00	100.76		
Heat Rate	(Btu/hr)	2441.97	1040761.12	10602.61	7454.30	981995.96	6025.03	37926.02		39192.25

Notes BDL - Below Detection Level

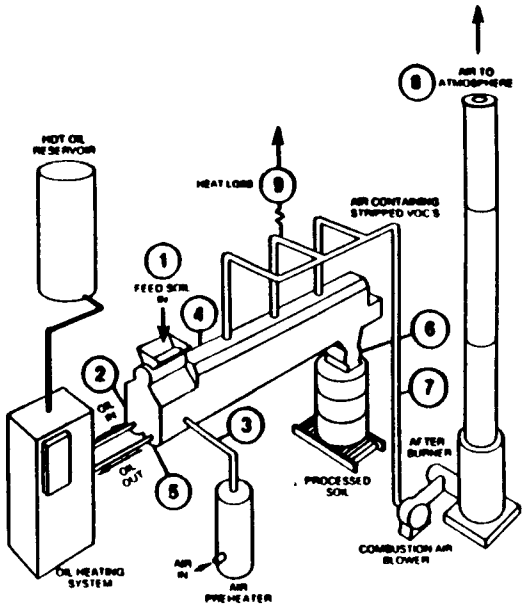

For Thermal Stripping of VOC's from Soil Pilot Study
At Letterkenny Army Depot (LEAD) Chambersburg, PA

WESTON

FIGURE G-23 MATERIAL/ENERGY BALANCE FOR TEST RUN 23

Scale	None	Project Number	Drawing Number
Date	11/85	2281-01-11	

Stream Number		1	2	3	4	5	6	7	8	9
Description		Soil Feed	Oil Inlet	Process Air Inlet	Infil-tration Air	Oil Outlet	Soil Dis-charge	Off-Gas Dis-Charge	Stack Exhaust	Heat Loss
Inerts	(lb/hr)	121.01					121.01			
VOC's - Dichloroethylene	(lb/hr)	3.10×10^{-3}					1.13×10^{-4}	3.07×10^{-3}		
Trichloroethylene	(lb/hr)	2.60×10^{-2}					6.34×10^{-4}	2.54×10^{-2}		
Tetrachloroethylene	(lb/hr)	2.03×10^{-2}					1.65×10^{-4}	2.01×10^{-2}		
Xylene	(lb/hr)	2.60×10^{-3}					1.65×10^{-5}	2.58×10^{-3}		
Other VOC's	(lb/hr)	7.98×10^{-4}					1.20×10^{-5}	7.86×10^{-4}		
Moisture	(lb/hr)	22.77					6.94			
Oil	(lb/hr)		5739.55			5739.55				
Air	(lb/hr)			180.00	246.00			436.00		
Water Vapor	(lb/hr)			0.94	1.23			20.00		
Particulate	(lb/hr)									
Hydrochloric Acid	(lb/hr)									
Carbon Dioxide	(lb/hr)									
Oxygen	(lb/hr)									
Carbon Monoxide	(lb/hr)									
Propane	(lb/hr)									
Total Mass	(lb/hr)	144.61	5739.55	180.94	247.23	5739.55	126.75	454.05		
Average Temp	(°F)	68	293	66	66	202	140	111	1632	
Specific Heat/Heating Value	(Btu/lb)	17.19	140.97	21.22	21.23	136.79	31.18	74.63		
Heat Rate	(Btu/hr)	2486.91	809129.59	4009.99	5247.85	773624.49	3942.50	33793.42		9513.91

Notes BDL - Below Detection Level

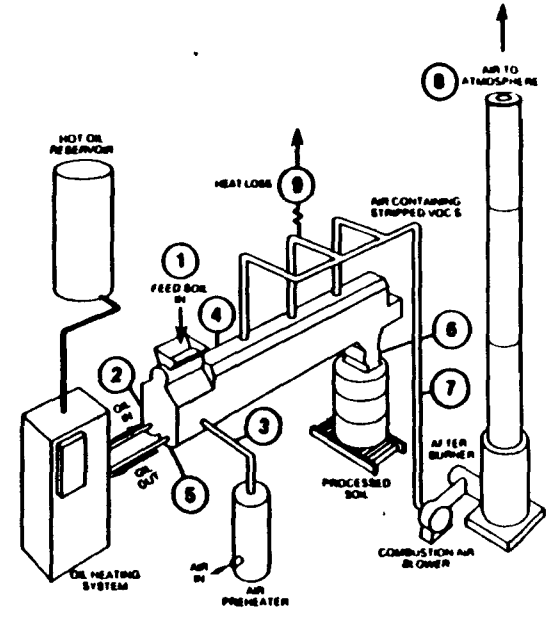

For Thermal Stripping of VOC's from Soil Pilot Study
At Letterkenny Army Depot (LEAD) Chambersburg PA

WESTON
WESTON WAY
WEST CHESTER PENNSYLVANIA 19380
PHONE 215 692 3030
TELEX 83 5348

FIGURE G-24 MATERIAL/ENERGY BALANCE FOR TEST RUN 24

Scale	None	Project Number	Drawing Number
Date	11/85	2281-01-11	

Stream Number		1	2	3	4	5	6	7	8	9
Description		Soil Feed	Oil Inlet	Process Air Inlet	Infil-tration Air	Oil Outlet	Soil Dis-charge	Off-Gas Dis-Charge	Stack Exhaust	Heat Loss
Inerts	(lb/hr)	153.43					153.43			
VOC's - Dichloroethylene	(lb/hr)	6.11×10^{-1}					2.09×10^{-3}	4.20×10^{-1}		
Trichloroethylene	(lb/hr)	1.92×10^{-1}					1.37×10^{-3}	1.89×10^{-1}		
Tetrachloroethylene	(lb/hr)	9.20×10^{-2}					1.30×10^{-3}	9.06×10^{-2}		
Xylene	(lb/hr)	6.46×10^{-1}					1.03×10^{-4}	6.12×10^{-3}		
Other VOC's	(lb/hr)	1.50×10^{-1}					7.25×10^{-5}	1.43×10^{-3}		
Moisture	(lb/hr)	20.74					7.22			
Oil	(lb/hr)		5991.20			5991.20				
Air	(lb/hr)			197.00	267.00			464.00		
Water Vapor	(lb/hr)			1.20	3.60			16.40		
Particulate	(lb/hr)									
Hydrochloric Acid	(lb/hr)									
Carbon Dioxide	(lb/hr)									
Oxygen	(lb/hr)									
Carbon Monoxide	(lb/hr)									
Propane	(lb/hr)									
Total Mass	(lb/hr)	174.46	5991.20	198.20	268.60	5991.20	160.66	480.60		
Average Temp	(°F)	58	293	63	63	280	140	111	1634	
Specific Heat/Heating Value	(Btu/lb)	11.09	360.97	21.51	21.74	333.00	33.54	63.64		
Heat Rate	(Btu/hr)	2281.01	844617.00	4261.94	5840.82	796851.62	5366.46	30590.75		24496.82

Notes BDL - Below Detection Level

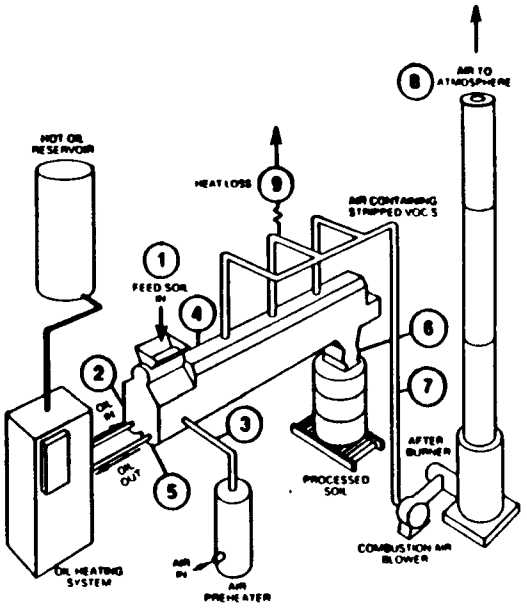

For Thermal Stripping of VOC's from Soil Pilot Study
At Letterkenny Army Depot (LEAD) Chambersburg PA

WESTON
WESTON WAY
WEST CHESTER PENNSYLVANIA 19380
PHONE 215 692 3030
TELEX 83 5340

FIGURE G-25 MATERIAL/ENERGY BALANCE FOR TEST RUN 25

Scale	None	Project Number	Drawing Number
Date	11/85	2281-01-11	

Stream Number		1	2	3	4	5	6	7	8	9
Description		Soil Feed	Oil Inlet	Process Air Inlet	Infil-tration Air	Oil Outlet	Soil Dis-charge	Off-Gas Dis-Charge	Stack Exhaust	Heat Loss
Inerts	(lb/hr)	133.24					133.24			
VOC's - Dichloroethylene	(lb/hr)	4.65×10^{-1}					6.53×10^{-4}	4.20×10^{-3}		
Trichloroethylene	(lb/hr)	3.57×10^{-1}					7.14×10^{-3}	3.50×10^{-2}		
Tetrachloroethylene	(lb/hr)	1.30×10^{-1}					6.59×10^{-3}	1.31×10^{-1}		
Xylene	(lb/hr)	2.15×10^{-2}					7.97×10^{-4}	2.27×10^{-2}		
Other VOC's	(lb/hr)	2.64×10^{-1}					3.97×10^{-4}	2.24×10^{-3}		
Moisture	(lb/hr)	21.34					6.11			
Oil	(lb/hr)		5040.24			5040.24				
Air	(lb/hr)			191.00	269.00			460.00		
Water Vapor	(lb/hr)			1.20	1.56			20.00		
Particulate	(lb/hr)									
Hydrochloric Acid	(lb/hr)									
Carbon Dioxide	(lb/hr)									
Oxygen	(lb/hr)									
Carbon Monoxide	(lb/hr)									
Propane	(lb/hr)									
Total Mass	(lb/hr)	155.10	5040.24	192.20	250.56	5040.24	137.37	460.50		
Average Temp	(°F)	60	299	60	60	285	145.11	126	1665	
Specific Heat/Heating Value	(Btu/lb)	15.37	144.90	23.02	23.01	136.00	31.52	77.30		
Heat Rate	(Btu/hr)	2104.37	848242.60	4426.32	5764.42	798967.26	4330.30	35590.41		19919.66

Notes BDL - Below Detection Level

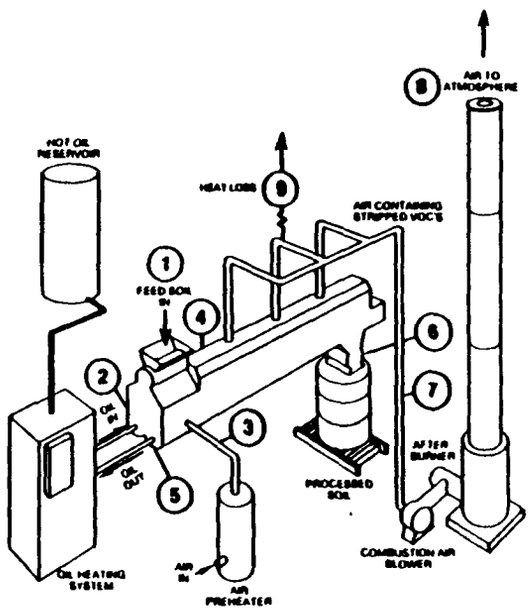

For Thermal Stripping of VOC's from Soil Pilot Study
At Letterkenny Army Depot (LEAD) Chambersburg, PA

WESTON
WESTON WAY
WEST CHESTER PENNSYLVANIA 19380
PHONE 215 692 3030
TELEX 83 5340

FIGURE G-26 MATERIAL/ENERGY BALANCE FOR TEST RUN 26

Scale	Project Number	Drawing Number
None	2281-01-11	
Date 11/85		

Stream Number		1	2	3	4	5	6	7	8	9
Description		Soil Feed	Oil Inlet	Process Air Inlet	Infil-tration Air	Oil Outlet	Soil Dis-charge	Off-Gas Dis-Charge	Stack Exhaust	Heat Loss
Inerts	(lb/hr)	179.69					179.69			
VOC's - Dichloroethylene	(lb/hr)	BDL					BDL	BDL		
Trichloroethylene	(lb/hr)	1.70×10^{-2}					3.45×10^{-6}	1.67×10^{-2}		
Tetrachloroethylene	(lb/hr)	2.65×10^{-2}					4.90×10^{-5}	2.65×10^{-2}		
Xylene	(lb/hr)	4.70×10^{-3}					4.90×10^{-6}	4.70×10^{-3}		
Other VOC's	(lb/hr)	BDL					BDL	BDL		
Moisture	(lb/hr)	20.79					1.61			
Oil	(lb/hr)		3826.36			3826.36				
Air	(lb/hr)			149.00	176.00			325.00		
Water Vapor	(lb/hr)			0.93	1.11			25.00		
Particulate	(lb/hr)									
Hydrochloric Acid	(lb/hr)									
Carbon Dioxide	(lb/hr)									
Oxygen	(lb/hr)									
Carbon Monoxide	(lb/hr)									
Propane	(lb/hr)									
Total Mass	(lb/hr)	204.52	3826.36	149.93	177.11	3826.36	181.50	350.05		
Average Temp	(°F)	66	561	70	70	501	346	396	1654	
Specific Heat/Heating Value	(Btu/lb)	15.60	342.36	21.41	21.47	290.72	71.73	325.54		
Heat Rate	(Btu/hr)	3206.50	1310011.51	3509.85	4156.07	1112400.76	13018.95	43946.04		151518.16

Notes BDL - Below Detection Level

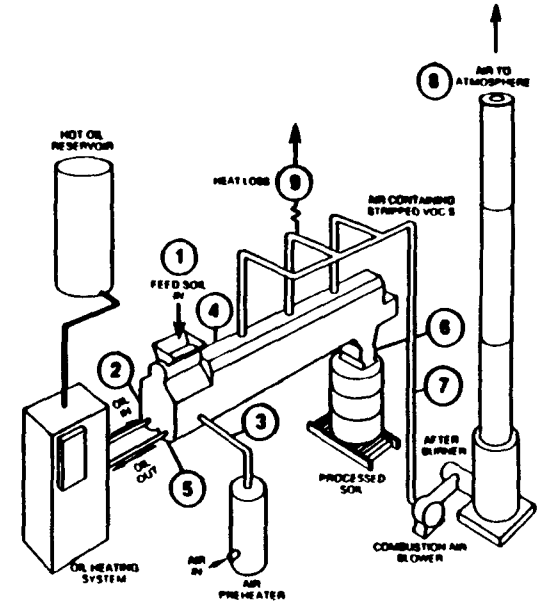

For Thermal Stripping of VOC's from Soil Pilot Study
At Letterkenny Army Depot (LEAD) Chambersburg, PA

WESTON
WESTON WAY
WEST CHESTER PENNSYLVANIA 19380
PHONE 215 [illegible]
TELEX [illegible]

FIGURE G-27 MATERIAL/ENERGY BALANCE FOR TEST RUN 27

Scale	None	Project Number	Drawing Number
Date	11/85	2281-01-11	

Stream Number		1	2	3	4	5	6	7	8	9
Description		Soil Feed	Oil Inlet	Process Air Inlet	Infil-tration Air	Oil Outlet	Soil Dis-charge	Off-Gas Dis-Charge	Stack Exhaust	Heat Loss
Inerts	(lb/hr)	91.65					91.65			
VOC's - Dichloroethylene	(lb/hr)	7.32×10^{-4}					8.26×10^{-6}	7.24×10^{-4}		
Trichloroethylene	(lb/hr)	6.70×10^{-2}					1.19×10^{-5}	6.70×10^{-2}		
Tetrachloroethylene	(lb/hr)	3.71×10^{-2}					BDL	3.71×10^{-2}		
Xylene	(lb/hr)	5.35×10^{-3}					BDL	5.35×10^{-3}		
Other VOC's	(lb/hr)	6.77×10^{-4}					6.42×10^{-5}	6.13×10^{-4}		
Moisture	(lb/hr)	17.50					0.09			
Oil	(lb/hr)		3121.51			3121.51				
Air	(lb/hr)			138.00	237.00			375.00		
Water Vapor	(lb/hr)			1.00	1.79			20.20		
Particulate	(lb/hr)									
Hydrochloric Acid	(lb/hr)									
Carbon Dioxide	(lb/hr)									
Oxygen	(lb/hr)									
Carbon Monoxide	(lb/hr)									
Propane	(lb/hr)									
Total Mass	(lb/hr)	109.24	3121.51	119.00	238.79	3121.51	91.74	395.29		
Average Temp	(°F)	67	552	70	70	500	365	190	1657	
Specific Heat/Heating Value	(Btu/lb)	16.77	334.22	24.48	24.79	297.14	73.26	101.91		
Heat Rate	(Btu/hr)	1832.18	1043279.09	2402.15	5920.76	927537.12	6721.25	40283.88		79891.93

Notes BDL - Below Detection Level

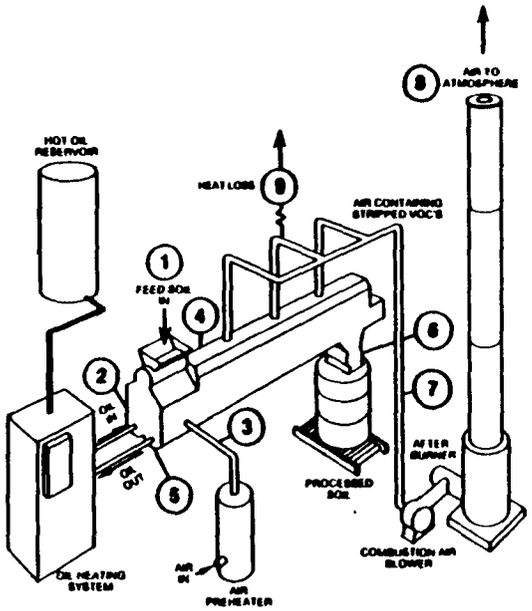

For Thermal Stripping of VOC's from Soil Pilot Study
At Letterkenny Army Depot (LEAD) Chambersburg, PA

WESTON
WESTON WAY
WEST CHESTER PENNSYLVANIA 19380
PHONE 215 692 3030
TELEX 83 5348

FIGURE G-28 MATERIAL/ENERGY BALANCE FOR TEST RUN 28

Scale	None	Project Number	Drawing Number
Date	11/85	2281-01-11	

APPENDIX H

SUPPLEMENTAL DATA

Table H-1 Moisture content in the processed soil.

Table H-2 Mass flow rate of feed soil and processed soil.

Table H-3 Comparison of total VOC's as measured by the CEM system and GC/MS analysis.

Table H-4 Summary of MM1 data from Test Run 2 (6 August 1985)

Table H-5 Summary of MM1 data from Test Run 4 8 August 1985).

Table H-6 Summary of MM1 data from Test Run 5 9 August 1985).

Table H-7 Moisture content in the air discharge stream.

Table H-8 Temperature of the air discharge stream.

H. SUPPLEMENTAL DATA

H.1 Moisture content of processed soils. The moisture content in the processed soil varied with changes in the operating conditions. The moisture content of the processed soils is shown, in matrix format, for all operating conditions in Table H-1.

H.2 Mass flow rate of soils. The mass flow rate of the feed and processed soils were monitored regularly during the pilot study. As expected, the mass flow rate of the processed soils varied with changes in the operating conditions and moisture content in the soil. The mass flow rates of the feed and processed soil streams are summarized in Table H-2.

H.3 VOC concentrations in off-gas manifold as determined by continuous emission monitoring (CEM) system and mobile mass spectrometer. In addition to the laboratory GC/MS analyses, two other modes of analysis were used to analyze the discharge gas in the three legs of the manifold system: 1) a CEM system, and 2) a mobile mass spectrometer. The CEM system utilized portable field instruments to measure the gross VOC concentrations in the linear range from 1 to 600 ppm relative to the calibration gas (benzene). An AID photoionization detector was used during Test Runs 1 through 11. An OVA was used during Test Runs 12 through 23, and test runs 25 through 28. A summary of the gross VOC concentrations as measured by the CEM system is shown for each manifold leg in Table H-3. For comparison, the total VOC concentrations as detected by GC/MS techniques are also given. As shown, the average deviation (i.e., 100% x [1 - (GC/MS)/CEM]) corresponding to the AID detector was 58.93 percent. The average deviation corresponding to the OVA was 54.00 percent. The large variance between the VOC's measured by the CEM system and GC/MS analyses indicates that the portable monitors are not adequate to accurately quantify VOC's in the air stream. The portable instruments are far less sophisticated analytically and extreme precision is not expected. However, analysis of Table H-3 indicates that the instrument readings are generally in the same order of magnitude as the GC/MS results. The portable monitors, therefore, can be used to obtain real-time estimates of VOC emissions in the air discharging the thermal processor.

A Bruker MM1 mobile mass spectrometer was also utilized during Test Runs 2, 4, and 5 conducted on 6 August 1985, 8 August 1985, and 9 August 1985, respectively. The MM1 was used to qualitatively identify VOC's in the discharge air stream. The data generated by the MM1 during Test Runs 2, 4, and 5 are shown in Tables H-4 through H-6. The MM1 identified only those

I. Ambient Air Inlet Temperature

Residence Time (Minutes)	Soil Discharge Temperature (°C) 50	100	150	Maximum
30	13.80	4.40	1.00	–
45	13.70	7.36	0.10	–
60	7.40	0.30	0.10	–
	3.90	–	–	1.00
	4.50	–	–	–
	3.00	–	–	–
75	–	–	–	–
90	–	–	–	0.10

II. Elevated Air Inlet Temperature

Residence Time (Minutes)	Soil Discharge Temperature (°C) 50	100	150	Maximum
30	10.50	5.80	2.00	–
45	3.50	0.67	0.30	–
60	7.00	1.70	0.10	–
	–	–	0.10	0.80
75	–	–	–	1.30
90	–	–	0.80	0.10

– Not evaluated ▒ - Phase I Test Runs

TABLE H-1 MOISTURE CONTENT IN THE PROCESSED SOIL (PERCENT BY WEIGHT)

I. Ambient Air Inlet Temperature

Residence Time (Minutes)	Process Stream	Soil Discharge Temperature (°C) 90	100	110	Maximum
30	Feed	250 25	242 22	181 34	–
	Processed	242 40	208 10	147 88	–
45	Feed	165 09	382 75	182 88	–
	Processed	135 46	329 14	152 82	–
60	Feed	181 34	141 50	178 79	–
	Processed	163 88	115 26	160 44	–
	Feed	144 63	–	–	204 51
	Processed	126 75	–	–	181 50
	Feed	174 46	–	–	–
	Processed	160 66	–	–	–
	Feed	155 10	–	–	–
	Processed	137 38	–	–	–
75	Feed	–	–	–	–
	Processed	–	–	–	–
90	Feed	–	–	–	109 24
	Processed	–	–	–	91 74

– Not evaluated

II. Elevated Air Inlet Temperature

Residence Time (Minutes)	Process Stream	Soil Discharge Temperature (°C) 90	100	110	Maximum
30	Feed	265 08	223 77	142 37	–
	Processed	256 91	198 09	112 80	–
45	Feed	214 17	310 87	258 73	–
	Processed	188 34	298 14	243 00	–
60	Feed	196 18	221 32	145 68	–
	Processed	181 66	171 67	113 46	–
	Feed	–	–	165 94	231 52
	Processed	–	–	141 43	196 69
75	Feed	–	–	–	192 25
	Processed	–	–	–	154 14
90	Feed	–	–	112 30	154 37
	Processed	–	–	97 06	131 60

TABLE H-2 MASS FLOW RATE OF FEED SOIL AND PROCESSED SOIL (WET BASIS - LB/HR)

TABLE H-3. COMPARISON OF TOTAL VOC'S AS MEASURED BY THE CEM SYSTEM AND GC/MS ANALYSES (PPM BY VOLUME)

Test run	CEM system Manifold 1	CEM system Manifold 2	CEM system Manifold 3	GC/MS Analyses Afterburner inlet	Deviation Between CEM System and GC/MS Analyses (percent)
I. Phase I Test Runs					
A. AID					
1	5	5	5	<1	80.00
2	768	812	778	704	10.43
3	6	8	24	7.7	39.21
4	3	3	3	1.1	63.33
5	831	809	800	936	15.08
6	768	695	592	1,122	63.80
7	3	2	2	519	(7,314.29)*
8	368	484	707	206	60.36
9	365	390	325	515	43.06
10	1,240	1,320	1,200	3,620	188.83
11	437	426	381	519	25.16
				Average	58.93
B. OVA					
12	331	494	477	426	1.84
13	117	133	122	88	29.03
14	167	202	130	258	55.11
15	550	607	533	544	3.43
16	399	537	576	503	0.20
17	142	157	115	196	42.03
18	17	17	17	5.3	68.82
(Average OVA Deviation - Phase I Test Runs:					28.64)

*Excluded as outlier

TABLE H-3. (Continued)

Test run	GC/MS Analyses Manifold 1	GC/MS Analyses Manifold 2	GC/MS Analyses Manifold 3	CEM system Afterburner inlet	Deviation Between CEM System and GC/MS Analyses (percent)
I. Phase II Test Runs					
A. OVA					
19	2.4	3.6	5.2	70	94.67
20	2.0	4.2	5.3	54	92.90
21	1.6	3.5	7.6	100	96.77
22	3.6	3.4	3.6	44	84.39
23	10.8	9.6	3.8	39	79.32
(Average OVA Deviation - Phase II Test Runs:					89.41)
				Average	54.00 percent

TABLE H-4. SUMMARY OF MM1 DATA FROM TEST RUN 2 (6 AUGUST 1985)

Manifold	Number of determinations	Target Compounds (arbitary log units) 1,2-Dichloroethene	1,1,1-Trichloroethane	Aliphatic hydrocarbons	Chloroform	Dichloromethane
Baseline[1]		3.0-3.9	2.9-3.7	3.6-4.5		2.6-3.2
1	6	4.3-5.0	4.1-5.0	4.4-5.2	3.9-4.9	3.6-4.5
2	3	4.7-5.0	4.8-5.0	4.9-5.3	4.5-4.9	3.9-4.6
3	5	4.3-4.9	4.8-5.0	4.9-5.3	4.0-4.9	3.8-4.7
1	4	4.6-4.8	4.4-4.9	4.8-5.1	3.7-4.6	3.2-4.0
2	6	4.1-4.9	4.1-4.8	4.4-5.0	3.8-4.6	3.0-4.0
3	3	4.3-4.5	4.2-4.4	4.7-4.8	4.1-4.4	3.8-4.0
1	3	4.3-4.7	4.3-4.9	4.4-5.0	4.0-4.6	3.3-3.9
2	2	5.1	4.9	5.0-5.1	4.7	---
3	4	4.8-4.9	4.7-4.8	4.8-5.1	4.3-4.7	3.9-4.0
Baseline[1]	3	3.3-4.0	2.5-3.9	4.7-4.8	---	3.3-3.5
1	3	4.5-4.8	4.5-4.8	4.0-4.8	3.9-4.4	2.9-3.9
---	---	---	---	---	---	---
3	2	5.1	4.9-5.0	5.2-5.3	4.8-4.9	4.5
1	6	4.4-5.4	4.4-5.0	4.6-5.1	3.7-4.5	3.5
2	2	4.7-5.0	4.5-4.8	4.2-4.4	4.2-4.4	3.2-3.3
3	3	4.9-5.3	4.9-5.3	5.0-5.1	4.7-4.8	---
1	3	5.0-5.2	5.1	4.9-5.0	4.6-4.8	---
2	4	4.7-4.9	5.0-5.1	4.8-5.1	4.7-4.8	3.9
3	5	4.7-4.9	4.8-4.9	4.9	4.5-4.6	4.0
1	3	4.6-4.9	4.4-4.9	4.7-5.0	4.3-4.6	4.0
2	3	4.9	4.9-5.0	5.0	4.6-4.7	---
3	2	4.5-4.8	4.8-4.9	4.6-5.0	4.4-4.6	---
Baseline[1]		3.9-4.8	3.9-4.0	4.8	3.9	4.4

[1]Reading taken in area where process was operating - represents background in that area.

TABLE H-5. SUMMARY OF MMI DATA FROM TEST RUN 4 (8 AUGUST 1985)

Manifold	Number of determinations	Target Compounds (arbitary log units)							
		Tetrachloroethene	Trichloroethene	Aliphatic hydrocarbons	Tetrachloroethane	Xylenes	1,1,1-Trichloroethane	Dichloropropane	Dichloroethene
2	10	2.4-2.9	2.3-2.7	2.9-3.4	2.7-3.0		---	---	---
3	5	2.4-2.5	2.3	2.9-2.7	2.6-2.7		---	---	---
1	5	2.4-2.9	2.3-2.8	3.1-3.3	2.7-2.9		---	---	---
2	5	3.1-3.6	2.9-3.3	3.9-4.2	3.5-3.7	2.6-3.2	2.9-3.2	2.8-3.0	3.1-3.5
3	4	3.6-3.7	3.4-3.6	4.0-4.2	3.2-3.8	2.7-3.3	3.2-3.3	3.0-3.3	3.3-3.4
1	4	3.6-3.9	3.3-3.8	3.5-4.4	3.1-3.9	3.2-3.4	2.6-3.5	2.7-3.4	2.8-3.8
2	6	3.4-3.7	3.3-3.7	4.1-4.4	3.6-3.8	3.1-3.4	3.1-3.4	3.0-3.3	3.2-3.7
3	2	3.8-4.0	3.7-3.9	4.4-4.5	3.9-4.0	3.5-3.6	3.5-3.6	3.3-3.4	3.8-3.9
Baseline[1]	6	2.8-2.9	2.8-2.9	4.0-4.1	3.3-3.4	2.9-3.2	---	2.8	---
1	3	3.7-4.1	3.5-3.9	4.3-4.5	3.8-4.0	3.6	3.5-3.6	3.4-3.7	3.7-3.8
2	4	3.7-4.1	3.5-3.9	4.4-4.5	3.9-4.0	3.3-3.5	3.5-3.6	3.3-3.6	3.5-3.9
3	3	3.6-3.9	3.4-3.8	4.4	3.9	3.4-3.5	3.3-3.5	3.1-3.4	3.3-3.5
1	5	3.5-3.9	3.6-3.8	4.3-4.4	3.9	3.4-3.5	3.3-3.6	3.2-3.3	3.3-3.7
2	4	3.4-3.9	3.3-3.9	4.4-4.6	3.9-4.0	3.4-3.6	3.2-3.6	3.1-3.4	3.3-3-6
3	4	3.6-3.9	3.5-3.8	4.4-4.5	3.9-4.0	3.4-3.5	3.3	3.2-3.3	ND
1	3	3.4-3.9	3.3-3.9	4.4	3.9	3.4-3.5	3.5-3.9	3.1-3.3	ND
2	5	3.4-4.0	3.3-3.9	4.4-4.5	3.8-4.0	3.5	3.3-3.5	3.1-3.4	ND
3	4	3.6	3.5-3.8	4.4-4.5	3.9-4.0	3.5	3.3-3.9	3.2-3.3	ND
Baseline[1]	2	2.9-3.4	3.1-3.3	4.4-4.5	3.5-3.9	3.4	ND	3.0-3.2	ND
1	4	3.1-3.8	3.0-3.1	4.1	3.1-3.3	3.3	3.1	2.9-3.2	ND
2	3	3.2-3.4	3.0-3.1	4.1-4.2	3.7-3.8	3.1-3.2	ND	2.9	ND
3	5	3.5-4.0	3.3-3.8	4.2-4.3	3.8-3.9	3.2	3.0-3.4	3.0-3.3	3.2-3.4
1	3	3.4-3.5	3.2-3.3	4.2-4.3	3.8	3.2	3.1-3.2	2.9-3.1	3.0-3.2
2	6	3.3-4.0	3.2-3.9	4.3-4.4	3.8-3.9	3.2-3.3	3.0-3.4	2.9-3.2	3.2
3	5	3.5-3.9	3.3-3.8	4.3-4.4	3.9	3.2-3.3	3.2-3.3	2.9-3.1	ND
1	3	3.3-4.1	3.1-3.9	4.1-4.3	3.7-3.9	3.1-3.2	3.2-3.5	2.9-3.2	3.0-3.5
2	3	3.3-3.9	3.2-3.7	4.3	3.8-3.9	3.3	3.2-3.5	3.0	3.2-3.5
3	3	3.6-3.9	3.4-3.7	4.3	3.9	3.3	3.3	2.9-3.2	ND
1	5	3.2-3.6	3.0-3.3	4.1-4.2	3.6-3.9	3.2-3.3	ND	2.8-2.9	ND
2	5	3.0-3.8	2.9-3.0	4.0-4.2	3.5-3.8	3.1-3.2	ND	2.7-2.8	ND
3	3	3.6-3.9	3.4-3.7	4.2	3.9	3.2	3.1-3.5	2.9-3.1	3.2-3.4

[1]Readings taken in area where process was operating - represents background in that area.
ND = Not detected.

6060A

TABLE H-6. SUMMARY OF MM1 DATA FROM TEST RUN 5 (9 AUGUST 1985)

Manifold	Number of determinations	Target compounds (arbitrary log units)						
		Tetrachloroethene	1,1,1-Trichloroethene	Chloroform	1,2-Dichloroethene	Xylenes	Tetrachloroethane	Trichloroethane
3	6	3.7-4.5	5.3-6.0	4.2-4.7	4.4-5.0	4.2-4.8	4.1-4.7	4.5-4.9
1	7	4.2-4.6	5.8-5.9	4.5-4.9	4.9-5.4	4.7-5.0	4.4-4.9	4.6-5.0
2	5	4.1-4.5	5.9-6.2	4.5-4.9	5.2-5.4	4.8-5.0	4.6-4.9	4.4-4.7
3	3	4.3-4.4	5.9	4.6-4.9	4.8-5.0	4.9-5.1	4.6-4.8	4.7-5.0
1	4	4.1-4.5	5.9-6.3	4.6-4.7	4.5-5.3	4.7-4.9	4.2-4.7	4.3-5.0
2	2	4.5-4.8	6.1-6.4	4.6-4.8	5.1-5.5	4.8-5.1	4.7-4.9	4.6-4.8
3	3	4.5-4.9	5.8-6.2	4.1-4.9	4.9-5.1	4.9-5.1	4.6-4.9	4.8-5.1
1	4	4.6-4.8	6.0-6.2	4.6-5.0	5.0-5.4	4.7-5.2	4.5-4.9	4.5-5.1
2	5	4.7-5.1	6.0-6.4	4.7-4.9	5.0-5.3	4.7-5.1	4.7-5.0	4.7-4.9
3	3	4.9-5.1	6.5-6.8	4.9	5.4-5.9	5.0-5.2	5.0-5.3	4.6-5.0
Baseline[1]	1	2.9	4.1	3.1	ND	3.6	3.5	ND

[1]Readings taken in area where process was operating - represents backgound in that area.

ND = Not Detected

I. Ambient Air Inlet Temperature

Residence Time (Minutes)	Soil Discharge Temperature (°C) 90	100	150	Maximum
30	4.84	12.50	13.70	–
45	14.00	22.70	11.60	–
60	8.18	10.30	9.28	–
	6.90	–	–	11.00
	4.50 5.40	–	–	–
	6.90	–	–	–
75	–	–	–	–
90	–	–	–	–

II. Elevated Air Inlet Temperature

Residence Time (Minutes)	Soil Discharge Temperature (°C) 90	100	150	Maximum
30	4.94	13.70	14.30	–
45	11.00	21.30	11.30	–
60	7.38	21.40	13.70	–
	–	–	10.40	14.40
75	–	–	–	14.80
90	–	–	8.44	10.00

– Not evaluated ▒ = Phase I Test Runs

TABLE H-7 MOISTURE CONTENT IN THE AIR DISCHARGE STREAM (PERCENT BY WEIGHT)

WESTON

I. Ambient air inlet temperature

Residence Time (Minutes)	Location	Soil Discharge Temperature (°C) 50	100	150	Maximum
30	Man No 1	38	71	91	—
	Man No 2	38	90	111	—
	Man No 3	43	112	130	—
	ABI	42	81	97	—
45	Man No 1	33	51	63	—
	Man No 2	38	61	84	—
	Man No 3	43	88	122	—
	ABI	38	66	84	—
60	Man No 1	34	61	73	—
	Man No 2	42	75	88	—
	Man No 3	48	98	107	—
	ABI	38	76	87	—
	Man No 1	38	—	—	91
	Man No 2	57	—	—	118
	Man No 3	69	—	—	145
	ABI	44	—	—	91
	Man No 1	43	—	—	—
	Man No 2	51	—	—	—
	Man No 3	67	—	—	—
	ABI	44	—	—	—
	Man No 1	50	—	—	—
	Man No 2	63	—	—	—
	Man No 3	75	—	—	—
	ABI	52	—	—	—
75	Man No 1	—	—	—	—
	Man No 2	—	—	—	—
	Man No 3	—	—	—	—
	ABI	—	—	—	—
90	Man No 1	—	—	—	71
	Man No 2	—	—	—	103
	Man No 3	—	—	—	146
	ABI	—	—	—	88

II. Elevated Air Inlet Temperature

Residence Time (Minutes)	Location	Soil Discharge Temperature (°C) 50	100	150	Maximum
30	Man No 1	48	102	112	—
	Man No 2	47	113	126	—
	Man No 3	49	131	136	—
	ABI	42	102	118	—
45	Man No 1	57	53	83	—
	Man No 2	62	84	114	—
	Man No 3	72	58	122	—
	ABI	62	80	101	—
60	Man No 1	33	54	80	—
	Man No 2	38	88	91	—
	Man No 3	43	88	109	—
	ABI	34	58	91	—
		—	—	88	93
		—	—	91	124
		—	—	105	163
		—	—	78	112
75	Man No 1	—	—	—	86
	Man No 2	—	—	—	126
	Man No 3	—	—	—	162
	ABI	—	—	—	117
90	Man No 1	—	—	74	91
	Man No 2	—	—	98	132
	Man No 3	—	—	104	158
	ABI	—	—	78	109

Legend

Man Manifold

ABI - Afterburner inlet

— Not elevated

▒ : Phase I Test Runs

TABLE H-8 TEMPERATURE OF THE AIR DISCHARGE STREAM (°C)

compounds for which it was mass calibrated with standards; other compounds may have been present. Units on the summary tables represent the logarithmic intensities of ions characteristic to the target compounds (e.g., alphatic hydrocarbons were semiquantified with ions at 57, 71, and 85 atomic mass units (AMU)). It is emphasized that since the MM1 was not calibrated for quantification, and the sampling method (simply placing the probe 2 inches from the sampling port) was not quantitative, the data can be used only in a relative sense. The data cannot be converted to concentrations in air. Further work is required to standardize instrument response and establish sampling techniques before the logarithmic intensities can be converted to a relative concentrations.

H.4 Moisture content in the air discharge stream. The moisture content of the air discharge stream was monitored at the afterburner inlet. The moisture content of the combined air stream is shown for all operating conditions in Table H-7.

H.5 Temperature of the discharge air stream. The temperature of the gases discharging the thermal processor were monitored during each test run. Temperatures were monitored in each leg of the manifold system as well as at the afterburner inlet. Air discharge temperatures are summarized in Table H-8.

APPENDIX I

STATISTICAL ANALYTICAL APPROACH

APPENDIX I

STATISTICAL ANALYTICAL APPROACH

Analysis Techniques. The multiple regression analysis reduces the data to a linear equation, as discussed in Section 9, which can be used to predict important response variables. The use of stepwise analysis allows the determination of regression coefficients, while interactively specifying the system equations via addition or deletion of singular variables.

As with any statistical tool, there are limitations in the multiple regression technique; however, these limitations can be overcome as discussed in the following subsections.

In the case of a nonlinear relationship between the input variables and the response variable, the alternative procedures include:

(a) Reduce the span of the analysis of the response variable until an acceptable correlation is found.
(b) Transform the response variable, e.g.,
$$LN(Y) = a + b_n X_n$$
(c) Weigh each of the input variables, e.g.,
$$Y = a + b_1 w_1 x_1 + b_2 w_2 x_2 + \ldots + b_n w_n x_n$$
(d) Use multiple regression as the initial iterative step followed by analysis by a different technique to finalize the correlation.
(e) Utilize the linear relationship in an estimation capacity recognizing there may be variance from the true relationship.

In order to determine the exact relationship between the variables over a useful span, the third and fourth procedures would have to be employed following each of a series of trial operations similar to the test recently completed. This would be very costly and time consuming and is impractical for this analysis.

A correlation which minimizes the variance from the true relationship could be developed using the third and fourth procedures to analyze the data recorded from the completed test. Although this procedure could extract some otherwise indistinguishable relationships from the data, it would be very time consuming and is also not within the scope of this project.

The method generally accepted as the initial iterative step is a combination of the first, second, and fifth procedures, whereby a basic correlation would be developed followed by the determination of its useful span. This data analysis is based on this method.

One advantage of multiple regression is the ability to simultaneously analyze unlimited numbers of input variables. When computers are used to perform the analysis the number of input variables may be limited by the software or hardware of the computer. WESTON has utilized software and hardware which can analyze all of the test variables simultaneously. A Tektronix 4054 microcomputer and its associated plot-50 statistics: Multiple Linear Regression software package[6] was utilized to perform the computations necessary for the iterative steps.

It should be noted, however, that the number of calculations required to solve the equations used in the analysis increases factorially as each additional variable is included in the analysis. Computer time should be a consideration when deciding the number of input variables to be analyzed.

As the number of input variables increases, so does the probability of coincidence (i.e., an input variable may not actually be correlated to the response variable other than by coincidence). While only additional testing can prove correlation by coincidence, this factor can be discounted based on scientific judgment and adjustment to the response parameters.

Final solution. Application of the multiple regression packages yielded ANOVA tables, regression tables, and summary of successive significance of input variables.

The ANOVA table includes the following information*:

(a) SS - The sum of squares of the deviations.
(b) MS - The mean square, which is SS/df.
(c) df - Degress of freedom.
(d) F - The value of the F statistic, such that
F = (Regression SS/df)/(Residual SS/df).

---

[6]Users Manual, Statistics: Multiple Linear Regression, Plot 50-4050D04, Tektronix, Inc., Beaverton, Oregon, July 1982.
*A glossary of statistical terms is provided in Table I-1 at the end of this appendix.

(e) Pr >F - The probability that a value of a random variable having the F-distribution takes on a value greater than the value of F. A value less than 0.1 indicates significance of the F statistic and, consequently, the overall system equations. Statisticians normally associate a Pr >F value of less than 0.05 with a very significant hypothesis.

(f) R-square - The coefficient of determination, which gives a measure of the linear association between the dependent variable and the set of independent variables. The R-square value indicates the significance of the model (or variable) where 1.0 equals 100 percent.

(g) Rbar-square - An adjustment to R-square for its tendency to increase as the number of independent variables increases. The adjustment is

$$1 - ((\Sigma\, res^2/(n-p))/(\Sigma(Y_j-Y)^2/(n-1))$$

(h) Root of Residual MS - The square root of the residual mean square.

The regression table includes the following information for each variable coefficient in the regression equation:

(a) Estimate - The estimated value of the coefficient.

(b) Standard Error - The standard error of the regression coefficient estimates.

(c) t - The value of the t-statistic, which is, for each estimate:

Estimate/Standard Error.

(d) Pr >ABS(t) - The probability that the absolute value of a random variable having the t-distribution takes on a value greater than the absolute value of t. A value of Pr >ABS(t) of less than 0.1 indicates significance of the t-static and, consequently, the estimated value of the coefficient. Statisticians normally associate a Pr >ABS(t) value of less than 0.05 with a very significant hypothesis.

The value of the Durbin-Watson statistic can be used to test whether the residuals are uncorrelated.

For each iterative step, both the forward and backward stepping techniques are applied. The forward stepping analysis allows the statistician to select a variable to be added to the model, or the Tektronix 4054 will automatically select the variable which is most significant of those remaining, and add it to the model. The forward stepping technique determines the marginal contribution of each variable added. The backward stepping technique includes all of the selected variables to determine interrelationships between the input variables and to calculate an overall system equation.

The iteration process was continued until significant and practical system equations were developed. System equations were rejected if:

(a) The probability that the hypothesized equation was not correct exceeded 10 percent (Pr >F was not less than 0.1).
(b) The significance of the equation did not approach 90 percent (R-square did not approach 0.9) or too many variables were required to reach this level.
(c) The range of response variables for which a correlation could be developed was too small.

Input variables were eliminated from the system equations based on:

(a) Insignificant marginal contribution to the model determined by the R-squared value computed during the forward stepping process.
(b) A high probability that the hypothesized variable coefficient was not correct as determined by the analysis of the t statistic of the regression table (Pr >ABS(t)).
(c) Scientific and intuitive reasoning suggesting alternative correlations between the input variable in question and the response variable.
(d) The coefficient of the input variable was corrective.

The system model is a set of simple linear equations which describe certain system parameters and enable the projection of responses to be calculated based on measureable input data. The use of the system model can vary from a basis for an environmental permit application to becoming an aid for system design or ultimately a dynamic model. The intended use of the system equations for the purposes of this report is the projection of system requirements to aid in future technical and economic feasibility analyses of thermal stripping as a decontamination method for soils contaminated with VOC's as well as system design.

TABLE I-1. GLOSSARY OF STATISTICAL TERMINOLOGY

ANOVA table - Analysis of Variance table. The ANOVA table provides a useful summary of calculations about variability. It contains sums of squares and mean square estimates of the two sources of variability (regression and residuals) and their respective degrees of freedom, the value of the F-statistic, R-square, Rbar-square, and Pr >F.

Dependent variable - The variable to be described in terms of others in the regression model.

Fitted values - Values of the dependent variable calculated from the regression equation and existing values of the independent variables in the model.

Independent variable - A variable used, possibly in conjunction with other variables, to describe a given dependent variable.

Least squares - The least-squares method is a method of line-fitting that determines parameter values to minimize the sum of squares of the deviations (lengths of the vertical line segments) from the observed data points to the line.

Mean - The arithmetic average of a column of data.

Median - The middle value in an ordered column of data; that is, the data value half way between the top and bottom.

Missing-data value - A numeric constant used as a place holder for data missing from the data set.

Mode - The value that occurs most often in a data set.

Model - A statistical equation that expresses the supposed (often only approximate) functional relation between variables.

Observation - A row of data in a data file.

Outliers - A pair of values being plotted is an outlier if the value for one of the variables falls outside a specified number of standard deviations from its mean. (Outliers for an index plot are defined only on the variable for the y axis.) More generally, any discrepant value.

Pr >ABS(t) - The probability that the absolute value of a random variable having the the t distribution takes on a value greater than the value of the t statistic calculated as part of the regression table.

TABLE I-1. (Continued)

Pr >F - The probability that a random variable having the F distribution takes on a value greater than the value of the F statistic calculated as part of the ANOVA table.

Predicted value - The value of the dependent variable calculated from the regression equation and new values of the independent variables in the model.

Probability plot - Values of a variable plotted on a probability scale. The horizontal scale refers to percentages of the probability distribution. The vertical scale, an ordinary arithmetic scale, is for the variable. The degree to which the data lies on a straight line indicates the closeness of fit of the sample distribution to the theoretical distribution.

Raw data - The set of data values read from a data file and used directly by an algorithm, as opposed to a set of data read from a data file and manipulated by transformations before being used.

Regression coefficient - The coefficients of the equation used in a regression model.

Regression table - A table that provides a summary of regression calculations. It contains parameter estimates, the standard error of the estimates, the value of the t statistic, the t probability, and the mean and standard deviation of the dependent variable.

Residuals - The difference between the actual values and the fitted values of the dependent variable (see definition for e).

Response variable - Another name for a dependent variable.

Scatter plot - A scatter plot is a graphical display showing how two variables are related to each other.

Standard deviation - The square root of the variance.

Standard error of the mean - The standard deviation of a set of sample means.

Variance - The average of the sum of the squares of the deviation of each observation from the mean of the variable.

Distribution List

	Copies
Defense Technical Information Center Cameron Station Alexandria, Virginia 22314	14
Defense Logistics Studies Information Exchange US Army Logistics Management Center Fort Lee, Virginia 23801	2
Commander US Army Toxic and Hazardous Materials Agency Aberdeen Proving Ground, Maryland 21010-5401	32
Commander Letterkenny Army Depot Chambersburg, Pennsylvania 17201-4170	2