EPA/540/2-89/012

SUPERFUND TREATABILITY CLEARINGHOUSE

Document Reference:

Assink, J.W. "Extractive Methods for Soil Decontamination, A General Survey and Review of Operational Treatment Installations." Apeldoorn, Netherlands. Technical Report. 13 pp. November 1985.

EPA LIBRARY NUMBER:

Superfund Treatability Clearinghouse - EUTT

SUPERFUND TREATABILITY CLEARINGHOUSE ABSTRACT

Treatment Process:	Physical/Chemical - Soil Washing/Chemical Extraction
Media:	Soil/Silty
Document Reference:	Assink, J.W. "Extractive Methods for Soil Decontamination, A General Survey and Review of Operational Treatment Installations." Apeldoorn, Netherlands. Technical Report. 13 pp. November 1985.
Document Type:	Contractor/Vendor Treatability Study
Contact:	U.S. EPA, ORD HWERL Woodbridge Avenue Edison, NJ 08837-3579 212-264-2525
Site Name:	Ecotechniek BV (Non-NPL)
Location of Test:	Netherlands

BACKGROUND: The treatability study report provides a general overview of soil decontamination by extraction and reports on the field application of three specific different soil washing/solvent extraction systems. Each system is similar in design and removed contaminants from soil including crude oil and metals.

OPERATIONAL INFORMATION: The soil to be cleaned is mechanically pretreated to remove large objects such as pieces of wood, vegetation remains, concrete, stones, and drums, while hard clods of soil are reduced in size. The sieve residue may be cleaned separately. The pretreated soil is then mixed with an extracting agent such as acids, bases, surface active agents, etc. The primary purpose of this step is to transfer the contaminants to the extraction fluid, either as particles or as a solute.

The soil and the extracting agent are separated. The contaminants, the smaller soil particles (clay and silt particles) and the soluble components in the soil are generally carried off with the extraction agent. The soil undergoes subsequent washing with clean extracting agents and/or water to remove as much of the remaining extraction fluid as possible. The larger particles carried off with the extraction phase are separated as best as possible and, if required, undergo a subsequent washing with clean extracting agent. The contaminated extraction fluid is cleaned and can be re-used after the addition of chemicals.

PERFORMANCE: All types of contaminants may be removed from the soil by extraction if they can be dissolved in the extracting agent or dispersed in the extraction phase. Extraction is especially suitable for sandy soil, low in humus and clay content, because of the sand particles' (50-80 um) relatively high settling velocity. Sludge residue from this process generally has to be disposed of. Currently, four installations for extractive cleaning of excavated soil are operational in the Netherlands.

NOTE: Quality assurance of data may not be appropriate for all uses.

The operational soil washing installations have proven successful for removing cyanides; PNAs (polynuclear aromatics) and mineral oil; heavy metals; halogenated hydrocarbons and other contaminants with efficiencies exceeding 80% (see Table 1).

CONTAMINANTS:

Analytical data is provided in the treatability study report. The breakdown of the contaminants by treatability group is:

Treatability Group	CAS Number	Contaminants
W07-Heterocyclics & Simple Aromatics	TOT-AR	Aromatic Hydrocarbons
W08-Polynuclear Aromatics	TOT-PAH	Total Polycyclic Aromatic Hydrocarbons
W11-Volatile Metals	7439-92-1 7440-66-6	Lead Zinc
W12-Other Inorganics	57-12-5	Cyanide
W13-Other Organics	TOX CRUDE	Total organic halogens Crude Oil

TABLE 1

CONTAMINANT REMOVAL EFFICIENCY

Contaminant	Initial Concentration ppm	Final Concentration After Treatment	Removal Efficiency % (approximate)
CN (galvanic)	450	15	94
Zn	1600-3000	300-500	83
Cd	66-125	5-10	92
Ni	250-890	85-95	66-89
Pb	100	25	75
Aromatics	240	41	81
PNAs	295	15	95
Crude Oil	79	2.3	97

NOTE: This is a partial listing of data. Refer to the document for more information.

NOTE: Quality assurance of data may not be appropriate for all uses.

980-TSI-RT-EUTT

Contaminated Soil

First International TNO Conference on Contaminated Soil
11–15 November, 1985, Utrecht, The Netherlands

edited by

J.W. ASSINK

TNO Division of Technology for Society, Apeldoorn, The Netherlands

W.J. VAN DEN BRINK

TNO Corporate Communication Department, The Hague, The Netherlands

1986 **MARTINUS NIJHOFF PUBLISHERS**
a member of the KLUWER ACADEMIC PUBLISHERS GROUP
DORDRECHT / BOSTON / LANCASTER

980-TS1-RT-1

EXTRACTIVE METHODS FOR SOIL DECONTAMINATION; A GENERAL SURVEY AND REVIEW OF OPERATIONAL TREATMENT INSTALLATIONS

J.W. ASSINK

TNO, P.O. box 342, 7300 AH APELDOORN, NETHERLANDS

1. ABSTRACT

In a general introduction to extractive methods attention is given to the basic principles, the potential fields of application and the costs of methods for treating contaminated soil.

The operational installations for extractive treatment in the Netherlands (Heijmans Milieutechniek BV, HWZ Bodemsanering BV, Bodemsanering Nederland BV and Ecotechniek BV) are described in the second part of the paper.

2. INTRODUCTION

The remedial methods used to treat contaminated soil may be broadly divided into two main categories[1,2,3]:

- Methods aimed at preventing or restricting the dispersion of the contamination to the immediate surroundings
- Methods aimed at removing or destroying the contamination, also referred to as "cleaning"

The last category may be further divided into two sub-groups:

- Excavation of the soil and subsequent cleaning, on-site or elsewhere. The most important techniques to be considered are:
  . thermal treatment
  . extraction, including methods based on wet-classification
  . flotation
  . steam and air stripping
  . microbiological treatment
  . miscellaneous, e.g. chemical treatment for the purpose of detoxification
  . combinations of the above-mentioned techniques
- Cleaning of the soil without prior excavation. These methods are usually referred to as in-situ cleaning. The most important techniques are:
  . extraction
  . steam and air stripping
  . microbiological treatment.

This paper deals only with the cleaning of excavated soil by means of extraction. The extractive methods for this purpose comprise every cleaning method by which contaminants are transferred to and carried off by a liquid phase; only flotation is being excluded. The following topics will be discussed:

- A general description of the extraction process
- Field of application
- Available installations and state of the art in the Netherlands
- Costs of the cleaning method.

3. GENERAL DESCRIPTION OF THE EXTRACTION PROCESS

3.1. Principal cleaning mechanisms

Two principal removal mechanisms may be distinguished in extractive cleaning:

- The contaminants are dissolved in the extracting agent, with or without the assistance of a chemical reaction preceding or acting simultaneously with the extraction
- The contaminants are dispersed in the extraction phase in the form of particles (suspended or colloidal), with or without the assistance of prior mechanical treatment. The subsequent separation between the contaminated particles and the relatively clean soil particles in the slurry is to be based on differences in:
  . particle size (sieving or classification)
  . settling velocity (wet classification)
  . surface properties (selective coagulation or flotation)
  . combinations of these properties.

Since contaminants are often for the greater part adsorbed to clay particles and humus, moderate to fair cleaning may result whenever these clay fractions and humus are separated from the soil by classification.

3.2. Process scheme

A general diagram of the extraction process which includes prior and subsequent treatments is given in figure 1. In this figure, the following successive steps are indicated (numbers correspond to those in figure 1):

1. The soil to be cleaned is pretreated to remove large objects such as pieces of wood, vegetation remains, concrete, stones, drums, etc., while hard clods of soil are reduced in size. The sieve residue may be cleaned separately.
2. The pretreated soil is mixed intensively with an extracting agent. The primary purpose of this step is to transfer the contaminants to the extraction fluid, either as particles or as a solute.
3. The soil and the extracting agent are separated. The contaminants, the smaller soil particles (clay and silt particles) and the soluble components in the soil are generally carried off with the extraction agent.
4. The soil undergoes subsequent washing with clean extracting agent and/or water to remove as much of the remaining extraction fluid as possible.
5. The larger particles carried off with the extraction phase are separated as best as possible and, if required, undergo a subsequent washing with clean extracting agent.
6. The contaminated extraction fluid is cleaned, whereupon part of it is re-used after the addition of chemicals, if required.

It is not always necessary to separate the soil particles and the extracting agent before going on to the actual cleaning step for the extraction fluid. In the case of certain types of contamination, the purification step (this is usually a chemical detoxification or flotation) may be applied directly to the suspension of soil particles and extraction fluid. In such cases, the separation of the soil particles from the extraction phase takes place after the actual purification step.

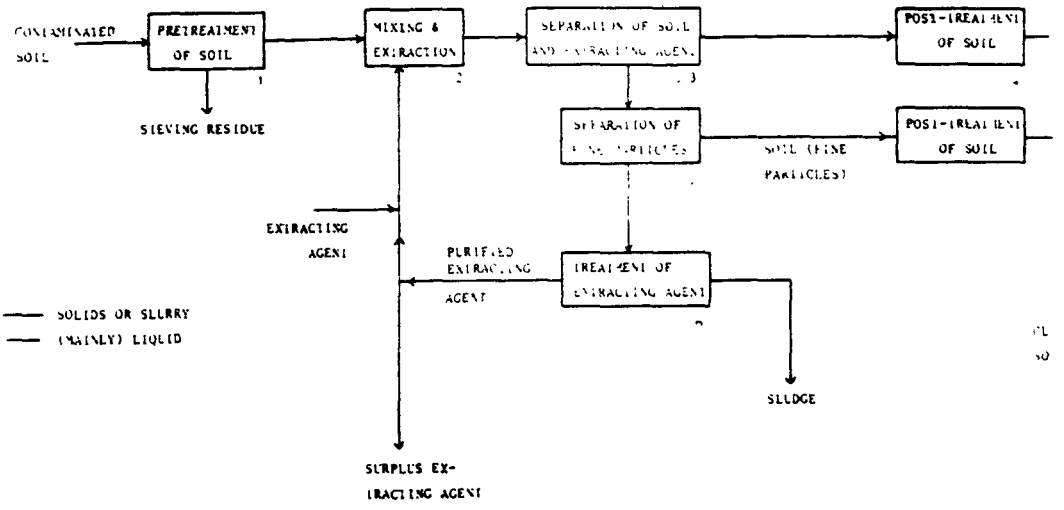

Figure 1: extraction of contaminated soil (general process scheme)

3.3. Extractive methods and extracting agents

For the purpose of this paper the following extractive methods are distinguished:

a) Methods, based on classification; the contaminants are generally not dissolved but mainly dispersed in the extraction liquid and are separated from the soil on the basis of differences in settling velocity. Hot or cold water, without any additives, may be used.

b) Methods, based on extraction with an aqueous liquid; to be subdivided into:
   - acids
   - bases
   - solution of surface active agents (detergents)
   - solution of complexing agents.

   Solutions of detergents and bases are preferably combined with classification (see a.) in order to yield a satisfactory cleaning result (see next paragraph)

c) Methods, based on organic solvents.

Aqueous extracting agents are usually preferred. Therefore methods a and b are preferred to method c, a preference based on a large number of considerations, such as:
- Safety of the extracting agent for man and environment
- Prevention of additional groundwater- and air pollution
- Natural presence of water in the soil
- Purification possibilities of contaminated extracting agents
- User friendliness
- Costs of the extracting agent.

As has been mentioned before, a number of aqueous extracting agents may be distinguished. Besides plain water, the addition of chemicals aimed at improving the extraction efficiency may be considered.

Among the chemicals which may be added are:
- Acids, such as HCl, H_2SO_4 and HNO_3; the primary purpose of these acids is to dissolve contaminants such as heavy metals
- Bases, such as Na_2CO_3 and NaOH; the purpose of these substances is either to dissolve or disperse contaminants in the extraction phase. Especially clay and humus, which contain a large quantity of contaminants, will be easily dispersed.
- Surface active agents; addition of these agents facilitates dispersion, for example of oil
- Sequestering agents (complex formers) such as citric acid, ammonium acetate, NTA and EDTA; these substances will mainly remove the "available" fraction of inorganic contaminants and will therefore abate the adverse effects of the soil to the ecosystem.

In addition to the separate use of the above-mentioned chemicals, combinations thereof may be considered. The extraction process may also be favourably influenced by elevating the extraction temperature, or by prior oxidation of the contaminants with the assistance of an oxidizer (e.g., hydrogen peroxide or ozone).

It is also possible in principle to employ organic solvents as extracting agents, an especially valuable factor if the contaminants to be removed are not, or scarcely soluble in an aqueous extracting agent, and will not disperse in it either.

The organic solvents suitable for this purpose must preferably be water-soluble, e.g. acetone, ethyl acetate, ethanol and isopropyl alcohol. In the case that water-insoluble solvents are used, the soil should be dried prior to the extraction.

If organic extracting agents are used, the treated soil should undergo subsequent treatment to ensure that any remaining extracting liquid is completely - or virtually completely - removed.

3.4. Cleaning the Extraction Fluid

A large number of physical, chemical and biological purification methods are available to clean the contaminated aqueous extracting agents that have resulted. In practice, coagulation, flocculation followed by sedimentation or flotation are often used. However, other techniques such as aerobic and anaerobic biological purification, ion exchange, electrolysis, membrane filtration equally may be considered. These methods are extensively used in industry and are described in detail in the literature. For more information on this subject, the general literature is referred to.

4. POTENTIAL FIELD OF APPLICATION

4.1. Types of Soil

The extraction process is best suited for the cleaning of sandy soils low in humus and clay content; it is fairly easy to separate sand particles

larger than 50-80 μm from the extraction fluid because of their relatively high settling velocity. Separation may be achieved by using relatively simple separation equipment, such as settlers. A second reason why the extraction process is highly suitable for the cleaning of sandy soil is that sand particles have a relatively small specific surface area; thus, the amount of contaminants adsorbed to the sand particles after cleaning is relatively low.

The presence of a small quantity of clay particles and/or humus-like substances in the soil imposes no restrictions on the extraction process. However, it is to be expected that most of the clay particles and humus will remain in the extraction phase when the soil particles are separated from it by simple separation techniques such as sedimentation. They will ultimately end up in the residual sludge.

Other types of soil (e.g. loamy soil, clay, peat and former waste dumping sites) are for three reasons generally much more difficult to clean by extraction than sandy soil is. Firstly, humus-like components, silt and clay particles readily form a relatively stable suspension with the extraction liquid. This is especially true for aqueous extracting agents with a high pH. If the contaminants are present in the extraction liquid as separate small particles, it is often impossible to separate relatively clean soil particles from the contaminated particles.

The second reason for difficult extractive cleaning is that many types of contaminant are readily adsorbed by humus and clay particles. In such situations the amount of extracting agent required for a sufficient cleaning may be prohibitive to a feasible process.

The last reason is that former waste dumping sites (but sometimes also "normal" sites) are very heterogeneous, and may therefore give rise to important practical problems in treating these sites.

Furthermore, it should be stressed that the amount of residual sludge resulting from these types of soil may be prohibitive for an economically feasible extraction process.

4.2. Contaminants

Table 1 gives a survey of the potential applicability of extractive methods concerning the different kinds of contaminant in sandy soils. Not every given indication of applicability has yet been proven, therefore the table should be considered to be provisional. The symbols used in the table are:

+ generally applicable
+/- occasionally applicable, depending on the actual contaminant(s) and the form in which they are present in soil
-/+ seldom applicable, or only a minor amount of the contaminant(s) will be removed
- generally not applicable.

"Applicable" does not always imply that a contaminated site will be cleaned to a satisfactory extent. Table 1 refers only to the technical applicability; the actual applicability also depends on factors such as mentioned further on.

TABLE 1. Potential applicability of extractive methods for sandy soils.

Contaminant		Classification with water [1]	Aqueous liquid: Acid	Aqueous liquid: Base [1]	Aqueous liquid: Complexing agent	Aqueous liquid: Detergent [1]	Organic liquid [2]
Aliphatic and aromatic hydrocarbons	volatile	+/-	-	+/-	-	+/-	+[3]
	non-volatile	-/+	-	-/+	-	+/-	+
Polynuclear aromatics		-/+	-	+/-	-	+/-	+
Halogenated hydrocarbons (volatile)		+/-	-	+/-	-	+/-	+[3]
Organic pesticides		+/-	-/+	+/-	-/+	+/-	+
Heavy metals and metalloids	kationic	+/-?	+	-	+/-	-/+	-
	anionic	-/+?	-/+	+	-/+	-	-
Cyanides	free	+	-	+	-	+	-
	complexes	-/+	-	+	-	-	-
Miscellaneous (inorganic compounds)		+/-	+/-	+/-	-/+	+/-	-

1) this method comprises a separation of humus and fine mineral particles (approx. < 50 μm) from the soil; these compounds will end up in the residual sludge
2) in the case of a water immiscible liquid, extraction must be preceded by the drying of the soil
3) these will evaporate to some extent during drying and/or extraction

As may be concluded from table 1, extractive methods are applicable to virtually every type of contaminant, if only the appropriate method and process conditions are chosen and can be realized.

4.3. Overall evaluation

As has been stated before, the actual applicabilities of the extractive methods do not solely depend on their technical ability to remove contaminants. Other factors influencing the selection of a certain method are for instance:

- costs of cleaning up
- safety of the method (health risks, explosion risks etc.)
- environmental impacts (especially in the case of organic extracting agents)
- waste streams e.g. (possibilities for the final disposal of residual sludge)
- possibilities of reuse of the cleaned soil.
- desired degree of contaminant removal

The costs of cleaning a given quantity of soil depend on many factors; the principal ones are:
- depreciation of, and interest on the investment in the treatment installation
- costs of labour
- costs of analyses for the purpose of process control
- disposal of residual sludge (amount and type of sludge)
- the standards which cleaned soil and waste water have to satisfy
- demand for chemicals and energy

Table 2 gives a qualitative indication of the amount of residual sludge, the demand for chemicals and the estimated range of the costs involved in the various extractive methods. The symbols used in this table are:
+ favourable or unproblematic
0 moderate
- strongly limiting, or negative.

The given costs of cleaning are exclusive of costs involving the excavation and transport of soil. In view of the lack of sufficient practical data, the estimated costs should be regarded as approximations.

TABLE 2. Survey of some relevant factors for the selection of extractive methods to treat excavated sandy soil.

Extractive method	Amount of residual sludge	Demand for chemicals	Estimated costs [2]) (Dfl/tonne)
Classification with water [1])	-	+	80-150
Aqueous liquid			
- acid	+/o	o/-	150-300
- base [1])	-/o	o	150-200
- complexing agent	+/o	-	> 200
- detergent [1])	-/o	o	150-250
Organic liquid	+/o	-	> 200

1) humus and fine mineral particles are separated from the soil and will end up in the residual sludge
2) Dfl 1,- = approx US$ 0.3 (June 1985)

5. OPERATIONAL INSTALLATIONS FOR EXTRACTIVE TREATMENT

5.1. Heijmans Milieutechniek B.V.

5.1.1. General. Heijmans installation for extractive cleaning[4] has been in operation since the spring of 1985. Its capacity comes to 10-15 tonnes of soil per hour. The whole installation has been constructed in containers and is therefore transportable.

5.1.2. Process description. A simplified process scheme is given in figure 2. The following steps may be distinguished:

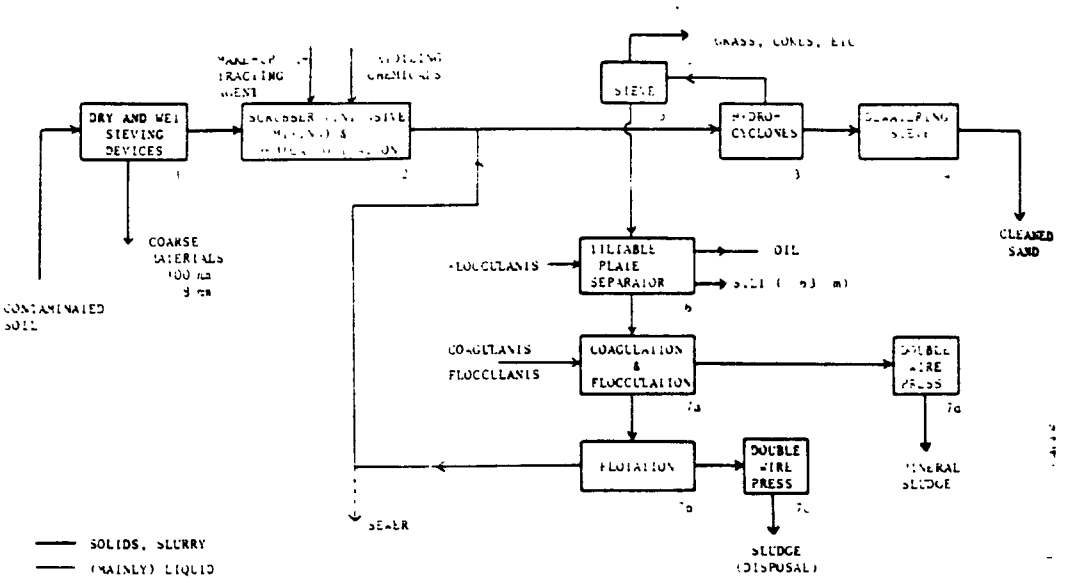

Figure 2: process scheme of the installation of Heijmans Milieutechniek B.V.

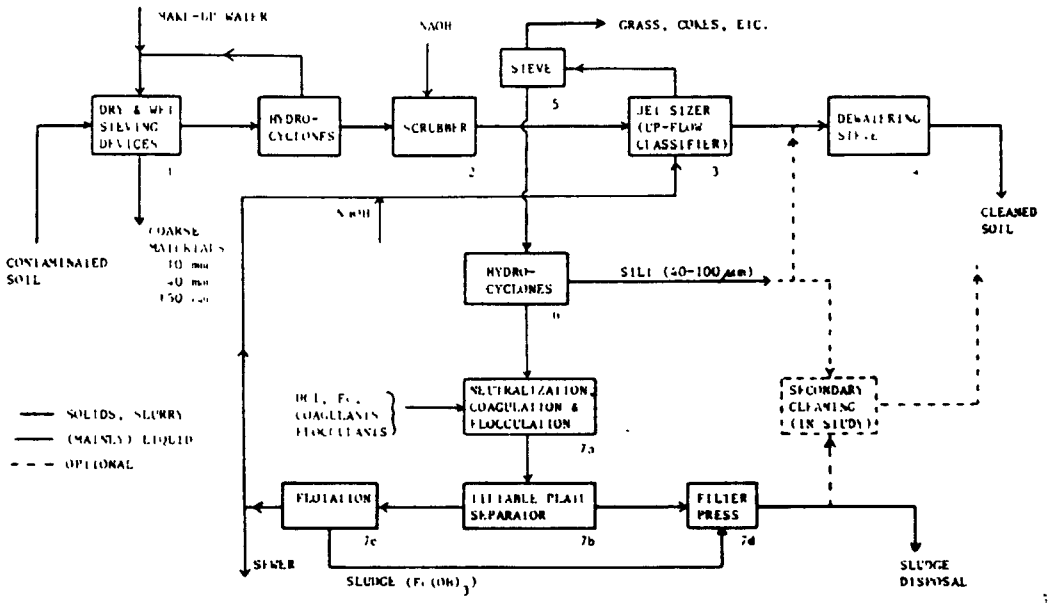

Figure 3: process scheme of the installation of HWZ Bodemsanering B.V.

1) Separation of coarse materials (> 10 mm)
2) Intensive mixing of soil and water in order to disperse all soil particles and to scour off the contaminants (scrubbing), in combination with a chemical oxidation (only in the case of cyanides, for detoxification)
3) Separation of coarse sand (> 60 μm) by hydrocyclones
4) Dewatering of the treated sand
5) Separation of coarse, low-density materials, e.g. cokes and grass
6) Separation of silt in a tiltable plate separator. Any free floating oil is skimmed off.
7) Coagulation and flocculation of the polluted extracting agent; followed by flotation of the formed flocs.

The cleaned extracting agents is generally recirculated to a great extent. It is possible to control the pH between approx. 3 and 12 in almost every apparatus of the plant.

5.1.3. Fields of application. The firm claims the following potential fields of application:
- Cyanides
- Water immiscible and low-density (< 1000 kg/m^3) hydrocarbons
- Heavy metals,

or combinations of these types of contaminant (see also table 1). The soil should preferably contain less than 30% of fine solids (< 63 μm) and humus-like compounds.
At this moment, the results of a number of test runs are available. Table 3 gives some examples.

TABLE 3. Some results of test runs executed with the extractive installation of Heijmans.

Contaminant	Initial concentration (mg/kg)	Concentration after treatment (mg/kg)	Removal efficiency (%)
Mineral oil	3.000-8.000	90-120	approx. 98
Galvanic CN	450	15	approx. 94
Zn	1.600-3.200	300-500	approx. 83
Cd	66-125	5-10	approx. 92
Ni	250-890	85-95	66-89

5.2. HWZ Bodemsanering BV

5.2.1. General. HWZ has developed an extractive cleaning plant[5] for sandy soil in co-operation with TNO. The plant has a capacity of 20 tonnes of soil per hour and has been in operation since the autumn of 1984. The installation itself is containerized, which allows for dismantling and setting-up elswhere.

5.2.2. Process description. A simplified process scheme is given in figure 3. The following steps may be distinguished:
1) Separation of coarse materials (> 10 mm)
2) Intensive mixing of soil and water in order to disperse all soil particles and to scour off the contaminants (scrubbing)

3) Washing of the soil with a suitable extracting agent in up-flow column (jet-sizing). The bottom stream consists of sand particles larger than approx. 100 µm
4) Dewatering of the cleaned soil
5) Separation of coarse, low-density materials, e.g. cokes
6) Separation of silt (approx 50-100 µm) by hydrocyclones. This fraction is normally fed to the dewatering sieve (4), but may also be handled separately
7) The spent extracting agent is cleaned in a number of steps. Cleaning is carried out by pH-adjustment, coagulation, flocculation, sludge separation in a tiltable plate separator, removal of the surplus of added iron by aeration and flotation and finally a last pH-adjustment. The cleaned extracting agent is recirculated to a great extent.

5.2.3. Field of application. The plant was initially developed for the cleaning of soil contaminated with cyanides. Besides cyanides, the potential applicability of the installation is conformable to table 1. Thus, the installation may be considered for the purpose of cleaning soil contaminated with mineral oils, aromatics, PNA's, some chlorinated hydrocarbons, cyanides and/or heavy metals. Some of the results obtained thus far are given in table 4.

TABLE 4. Some practical experiences with the extracting installation of BMZ.

Contaminant	Initial concentration (mg/kg)	Concentration after treatment (mg/kg)	Removal efficiency (%)
CN (gaswork)	100-200	approx.10	approx.95
PNA (gaswork)	36	0,7	98
EOCl	20-24	0,3-0,5	98-99
Zn	81	27	67
Pb	approx.100	approx.25	approx.75

5.3. Bodemsanering Nederland BV

5.3.1. General. The installation of Bodemsanering Nederland (BSN)[6] has been in operation since 1983 and was originally developed to separate oil from sandy soil. Its capacity is approximately 20 t/h, and the installation is easy to transport to a contaminated site.

5.3.2. Process description. The oil separation is based on a high pressure water jet curtain spouting loose the contaminants from the sand particles. A simplified process scheme is given in figure 4. The process comprises the following steps:
1) Separation of coarse materials (≧ 100 mm)
2) High pressure washing
3) Separation of coarse sand by sieves and hydrocyclones (> 63 µm)
4) Separation of silt by sedimentation (30-63 µm)
5) Separation of process water, oil and fine mineral fraction (< 30 µm)
6) Dewatering of the treated soil.

Step 4 and 5 may be enhanced by coagulants and flocculants. The process usually uses water without any additives. This fact offers the option of an additional microbiological treatment of the spent process water and/or the treated sand, as has been indicated in the process scheme. The process water will be often - for the greater part or completely - recirculated to the high pressure separator.

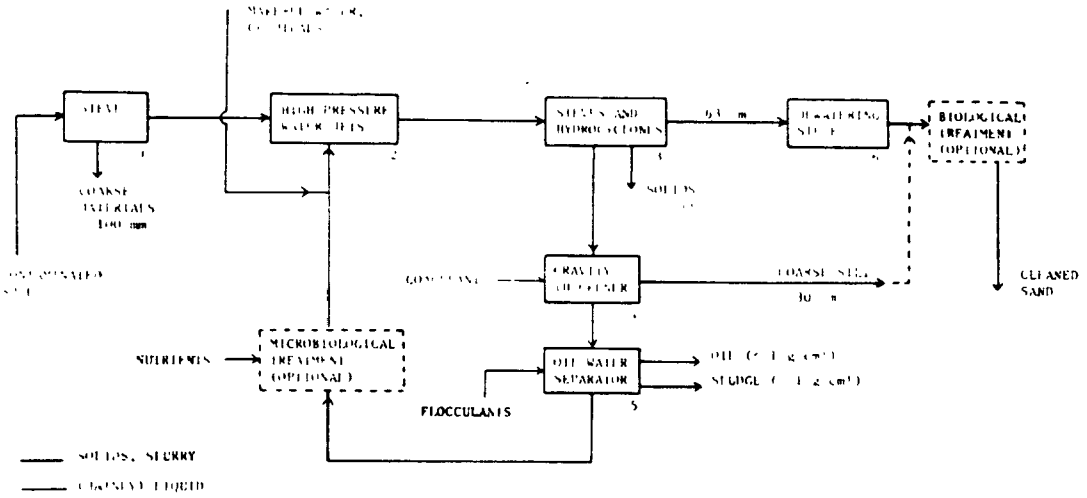

Figure 4: process scheme of the installation of Bodemsanering Nederland B.V.

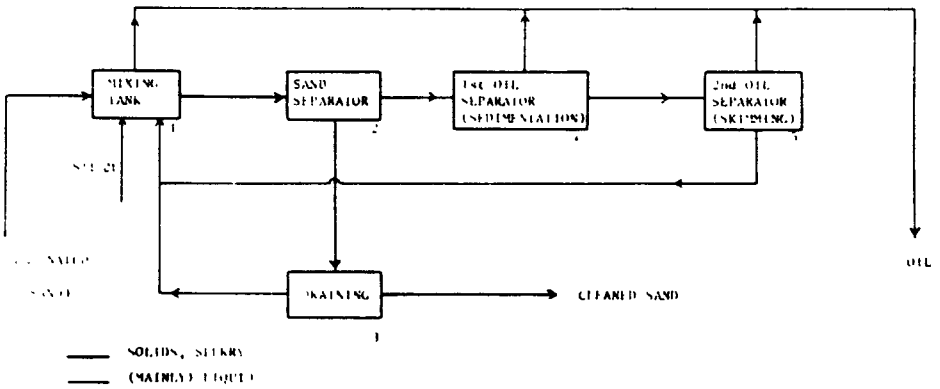

Figure 5: process scheme of the hot-water washing plant of Ecotechniek B.V.

5.3.3. Fields of application. BSN claims the following fields of application:
- all aliphatics and aromatics with low densities (floating on water)
- contaminants that are largely adsorped to those soil particles that will end up in the residual sludge (process step 5)
- volatile contaminants, e.g. per- and trichloro ethylene (these are stripped to the air when the soil is led through the high pressure washer)
- some water-soluble and biodegradable hydrocarbons, provided the microbiological option is being chosen
- all types of soil with a maximum amount of residual sludge (< 63 μm) of approx. 20% or approx. 2.5 t/h.

Some results obtained with this installation are given in table 5.

TABLE 5. Some practical experiences with the treatment installation of BSN.

Contaminant	Concentration before treatment (mg/kg)	Concentration after treatment (mg/kg)	Removal efficiency (%)
Aromatics	240	45*	81
PNA's	295	15	95
Crude oil	79.000	2.300	97

* the concentration of aromatics was reduced to 10 mg/kg on account of microbiological activity 6 months after treatment

5.4. Ecotechniek BV

5.4.1. General. Ecotechniek BV has had a so-called thermal washing installation available for several years. The installation's capacity comes to approximately 20 tonnes of soil per hour.

5.4.2. Process description. A simplified process scheme[7] is given in figure 5. The process roughly comprises the following steps:

1) The contaminated sand is slurried up with recycle water and (indirectly) heated with steam up to a max. of 90°C. Oil is dispersed in the water; any floating oil is skimmed off
2) Separation of sand particles
3) Dewatering of sand by natural draining
4 + 5) Oil containing process water is cleaned in two steps; separation of particles and oil thicker than water, and subsequently what may be skimmed off.

The temperature of the system is dependent on the type of oil to be separated.

5.4.3. Fields of application. The installation is especially suitable for sand heavily contaminated with (crude) oil, preferably less dense than water.

Thus far, experience has been gained in treating 5000 **tonnes of beach** sand contaminated by an oil spill. Sand containing **200,000 mg/kg of oil** could be cleaned to a **final concentration of 20,000 mg/kg**, which resulted therefore in a removal efficiency of 90%. The treated sand is used in the preparation of asphalt.

6. CONCLUSIONS

- Extractive methods comprise a number of techniques, with the common feature that the contaminants in the soil are transfered to a suitable liquid.
- In principal, all types of contaminant may be removed from the soil by extraction, if only the right process and process conditions are chosen.
- Extraction is especially suitable for sandy soil, because the slow, and non-settling particles (< 30....60 µm, humus) will generally end up in a contaminated, residual sludge. This sludge generally has to be disposed of. Moreover, clay particles and humus are much more difficult to clean than sand particles.
- Up to now, four installations for extractive cleaning of excavated soil are operational in the Netherlands. The specific applicabilities of these installations overlap only partly, although they are all based on aqueous extraction agents.
- The operational installations have proven applicable for cyanides, PNA's (poly nuclear aromatics) and mineral oil; heavy metals, halogenated hydrocarbons and other contaminants are often also removed to a great extent (> 80%).

7. ACKNOWLEDGEMENT

The author wishes to express his gratitude for the contributions of Mr C.J. Muntinga (HWZ Bodemsanering B.V.), Mr M.J.J. Heijmans, Mr B. Hilberts (both Heijmans Milieutechniek B.V.), Mr G.H.J. Ruiters (Bodemsanering Nederland B.V.) and Mr R.C. Reintjes (Ecotechniek B.V.).

8. LITERATURE

1. W.H. Rulkens, J.W. Assink: Extraction as a method for cleaning contaminated soil: possibilities, problems and research; Proc. Conf. Management Uncontrolled Hazardous Waste Sites, Washington DC 1984 (Hazardous Materials Control Research Institute, Silver Spring, Maryland, 1984) pp 576-583.
2. M.A. Smith (edit.): Contaminated Land: Reclamation and Treatment. Plenum Press, New York and London, 1985.
3. Handboek Bodemsaneringstechnieken (Handbook Techniques for Remedial Action), Staatsuitgeverij, The Hague, 1983.
4. Personal communication with B. Hilberts (Heijmans Milieutechniek B.V., P.O. box 2, 5240 BB Rosmalen, Netherlands).
5. Personal communication with C.J. Muntinga (HWZ Bodemsanering B.V., Vanadiumweg 5, 3812 PX Amersfoort, Netherlands).
6. Personal communication with G.H.J. Ruiters (Bodemsanering Nederland B.V., P.O. box 22002, 6360 AA Nuth, Netherlands).
7. Personal communication with R.C. Reintjes (Ecotechniek B.V., Beneluxlaan 9, 3527 HS Utrecht, Netherlands).