EPA 560/5-85-006
August 1985

METHODS FOR ASSESSING EXPOSURE TO CHEMICAL SUBSTANCES

Volume 6

Methods for Assessing Occupational Exposure to Chemical Substances

by

H. Lee Schultz, Gina H. Dixon, Stephen H. Nacht,
Clay E. Carpenter, William Christie, Gayaneh Contos,
Purna Desai, James N. DiClementi, John J. Doria,
Walter A. Palmer, Kate Richter, David Sullivan, Patricia H. Wood

EPA Contract No. 68-01-6271

Project Officer
Michael A. Callahan

Exposure Evaluation Division
Office of Toxic Substances
Washington, D.C. 20460

U.S. ENVIRONMENTAL PROTECTION AGENCY
OFFICE OF PESTICIDES AND TOXIC SUBSTANCES
WASHINGTON, D.C. 20460

U.S. Environmental Protection Agency
Region 5, Library (PL-12J)
77 West Jackson Boulevard, 12th Floor
Chicago, IL 60604-3590

DISCLAIMER

This document has been reviewed and approved for publication by the Office of Toxic Substances, Office of Pesticides and Toxic Substances, U.S. Environmental Protection Agency. The use of trade names or commercial products does not constitute Agency endorsement or recommendation for use.

FOREWORD

This document is one of a series of volumes, developed for the U.S. Environmental Protection Agency (EPA), Office of Toxic Substances (OTS), that provides methods and information useful for assessing exposure to chemical substances. The methods described in these volumes have been identified by EPA-OTS as having utility in exposure assessments on existing and new chemicals in the OTS program. These methods are not necessarily the only methods used by OTS, because the state-of-the-art in exposure assessment is changing rapidly, as is the availability of methods and tools. There is no single correct approach to performing an exposure assessment, and the methods in these volumes are accordingly discussed only as options to be considered, rather than as rigid procedures.

Perhaps more important than the optional methods presented in these volumes is the general information catalogued. These documents contain a great deal of non-chemical-specific data which can be used for many types of exposure assessments. This information is presented along with the methods in individual volumes and appendices. As a set, these volumes should be thought of as a catalog of information useful in exposure assessment, and not as a "how-to" cookbook on the subject.

The definition, background, and discussion on planning of exposure assessments are discussed in the introductory volume of the series (Volume 1). Each subsequent volume addresses only one general exposure setting. Consult Volume 1 for guidance on the proper use and interrelations of the various volumes and on the planning and integration of an entire assessment.

The titles of the nine basic volumes are as follows:

Volume 1: Methods for Assessing Exposure to Chemical Substances (EPA 560/5-85-001)

Volume 2: Methods for Assessing Exposure to Chemical Substances in the Ambient Environment (EPA 560/5-85-002)

Volume 3: Methods for Assessing Exposure from Disposal of Chemical Substances (EPA 560/5-85-003)

Volume 4: Methods for Enumerating and Characterizing Populations Exposed to Chemical Substances (EPA 560/5-85-004)

Volume 5: Methods for Assessing Exposure to Chemical Substances in Drinking Water (EPA 560/5-85-005)

Volume 6: Methods for Assessing Occupational Exposure to Chemical Substances (EPA 560/5-85-006)

Volume 7: Methods for Assessing Consumer Exposure to Chemical Substances (EPA 560/5-85-007)

Volume 8: Methods for Assessing Environmental Pathways of Food Contamination (EPA 560/5-85-008)

Volume 9: Methods for Assessing Exposure to Chemical Substances Resulting from Transportation-Related Spills (EPA 560/5-85-009)

Because exposure assessment is a rapidly developing field, its methods and analytical tools are quite dynamic. EPA-OTS intends to issue periodic supplements for Volumes 2 through 9 to describe significant improvements and updates for the existing information, as well as adding short monographs to the series on specific areas of interest. The first four of these monographs are as follows:

Volume 10: Methods for Estimating Uncertainties in Exposure Assessments (EPA 560/5-85-014)

Volume 11: Methods for Estimating the Migration of Chemical Substances from Solid Matrices (EPA 560/5-85-015)

Volume 12: Methods for Estimating the Concentration of Chemical Substances in Indoor Air (EPA 560/5-85-016)

Volume 13: Methods for Estimating Retention of Liquids on Hands (EPA 560/5-85-017)

Michael A. Callahan, Chief
Exposure Assessment Branch
Exposure Evaluation Division (TS-798)
Office of Toxic Substances

ACKNOWLEDGEMENTS

This report was prepared by Versar Inc. of Springfield, Virginia, for the EPA Office of Toxic Substances, Exposure Evaluation Division, Exposure Assessment Branch (EAB) under EPA Contract No. 68-01-6271 (Task 10) and No. 68-02-3968 (Task No. 41). The EPA-EAB Task Managers for this task were Stephen H. Nacht, and Greg Schweer, the EPA Program Manager was Michael Callahan; their support and guidance is gratefully acknowledged.

A number of Versar personnel have contributed to this task over the three year period of performance, as shown below:

Program Management	-	Gayaneh Contos
Task Management	-	H. Lee Schultz Gina H. Dixon
Technical Support	-	Clay E. Carpenter William Christie James N. DeClementi Purna Desai John J. Doria Walter A. Palmer Kate Richter David Sullivan Patricia H. Wood
Editing	-	Juliet Crumrine Barbara Malczak
Secretarial/Clerical	-	Shirley Harrison Donna Barnard Lucy Gentry

TABLE OF CONTENTS

	Page No.
FOREWORD	v
ACKNOWLEDGEMENTS	vii
TABLE OF CONTENTS	ix
LIST OF TABLES	xii
1. INTRODUCTION	
1.1 Purpose and Scope	1
1.2 Methodology Framework	1
1.3 Organization of the Report	4
2. Sources	5
2.1 Determining Chemical Manufacturing, Processing, and Use Locations	8
2.2 Identifying Production and Use Processes and Activities	8
2.2.1 Manufacturing	8
2.2.2 Processing	13
2.2.3 General Industrial Worker Activities	16
2.2.4 Activities of Wholesale and Retail Trade	19
3. MONITORING DATA	21
3.1 QA/QC Considerations	22
3.1.1 Sample Design	23
3.1.2 Sample Collection	23
3.1.3 Analytical Measurement Systems	24
3/1/4 Data Entry and Processing	24
3.2 Types of Monitoring	25
3.2.1 Personal/Breathing Zone Monitoring	25
3.2.2 Workplace or Area Monitoring	25
3.2.3 Biological Monitoring	25
3.3 Sample Collection Techniques	26
3.3.1 Types of Samples	26
3.3.2 Employees Sampled	27

TABLE OF CONTENTS (continued)

Page No.

3.4 Exposure Measurement Strategies 28

3.4.1 Sample Measurement 29
3.4.2 Length and Duration of Measurement 29

3.5 Available Information on Occupational Exposure 31

3.5.1 National Institute of Occupational Safety and Health 33
3.5.2 Occupational Safety and Health Administration..... 36

3.6 Summary 38

4. ESTIMATING CONTAMINANT RELEASES IN THE OCCUPATIONAL SETTING 41

4.1 Introduction 41

4.1.1 Types of Contaminated Releases 41
4.1.2 The Mass Balance Approach 43
4.1.3 Estimating Releases 45

5. ENVIRONMENTAL FATE AND EXPOSURE PATHWAYS 66

5.1 Workplace Air Contaminant Fate Processes 66
5.1.1 Indoor Transport Processes 66
5.1.2 Indoor Air Contaminant Removal Mechanisms..... 65
5.1.3 Outdoor Airborne Contaminant Fate Processes... 71

5.2 Estimating Air Concentrations in the Indoor Occupational Setting 73

5.3 Estimating Air Concentrations in the Outdoor Occupational Setting 80

5.3.1 Ground Level Releases 81
5.3.2 Vent Releases 83

6. EXPOSED POPULATIONS ANALYSIS 85

6.1 Identification and Enumeration of Exposed Populations 85

TABLE OF CONTENTS (continued)

Page No.

6.1.1 Generic Identification and Enumeration Data ... 86
6.1.2 Specific Identification and Enumeration Data 86

6.2 Population Characterization 87
6.3 Frequency and Duration of Occupational Exposure 88

6.3.1 Frequency and Duration 88
6.3.2 Worklife 96

7. CALCULATING EXPOSURE 99

7.1 Introduction 99
7.2 Inhalation Exposure 100
7.3 Dermal Exposure 101

7.3.1 Exposure to a Film of Liquid Deposited on the Skin 104
7.3.2 Immersion in Liquids 111

7.4 Ingestion Exposure 112

8. REFERENCES 113

APPENDIX A - PROCESSES AND EXPOSURE POTENTIAL 121

APPENDIX B - INFORMATION RESOURCE MATRIX 255

LIST OF TABLES

		Page No.
Table 2-1.	References Used to Obtain a General Overview of Chemical Manufacture	7
Table 2-2.	Unit Processes Used in the Manufacture of Organic Chemicals	9
Table 2-3.	Information Resources for Synthesis Routes and Their Diagrams	10
Table 2-4.	Operations Used in Processing Industries and Characteristic Types of Releases	14
Table 2-5.	Specific Operations That Require Hoods and May Lead to Occupational Exposure From Indirect Process Releases	17
Table 3-1.	Types of Measurement Samples to be Obtained for Assessment of Occupational Exposure	30
Table 3-2.	Guidelines for Comparing an Eight-Hour TWA Standard	32
Table 4-1.	Commercial Use Industries	62
Table 5-1.	Mixing Factor (m) Values for 1000 ft^3 Room	66
Table 5-2.	Dynamical Shape Factor α (Ratio of Termal Velocity of Equivalent Sphere to That of Particle)	70
Table 5-3.	Resuspension Factors for Various Room Activities	72
Table 5-4.	Occupational Indoor Air Contaminant Estimation Algorithms	74
Table 6-1.	Average Weekly Hours of Production Workers on Manufacturing Payrolls in 1979	89
Table 6-2.	Average Weekly Hours of Workers in Nonmanufacturing Industry in 1979	91
Table 6-3.	Frequency and Duration of Occupational Exposure for Specific Activities, Derived From a Random Sample of PMNs	92
Table 6-4.	Length of Working Life for Men and Women	97
Table 7-1.	Summary of Human Inhalation Rates for Men, Women, and Children by Activgity Group (m^3/hour)	102
Table 7-2.	Film Thickness and Density of Selected Liquids Under Various Experimental Conditions	106
Table 7-3.	Experimentally Determined Values for Density and Kinematic Viscosity for Six Selected Liquids.	109
Table 7-4.	Surface Area of Body Regions	104

LIST OF FIGURES

		Page No.
Figure 1-1.	Framework for Occupational Exposure Assessment...	2
Figure 5-1.	Gravational Settling Speeds for Particles With Density 5 gm/cm^3 Near the Earth's Surface (from Engelman 1968, as presented by Hanna and Hosker 1980)	68
Figure 5-2.	Theoretical Settling Velocities of Fibers	69
Figure 7-1.	ICRP Model of Regional Respiratory Tract Deposition as a Function of Particle Size	103

1. INTRODUCTION

1.1 Purpose and Scope

Sections 4, 5, and 6 of the Toxic Substances Control Act (TSCA) direct the Environmental Protection Agency (EPA) to assess human and environmental exposure to toxic substances. TSCA includes provisions for EPA to obtain production and test data from industry and to regulate both new and existing substances, if necessary. This necessity is based on the risk to those involved in the manufacture, processing, distribution, use, and disposal of the chemical.

Occupational exposure assessments have historically been limited by a lack of complete and reliable data, resulting in large data gaps for some worker populations. This document presents a generalized approach to occupational exposure assessment. It specifically deals with assessment of exposure occurring as a direct result of workplace activities; exposure to outdoor workers that results from contaminants in the ambient environment is not addressed in this report. For procedures appropriate to the assessment of worker exposure to contaminants in the ambient environment, the analyst is referred to Volumes 2 and 4 of this report series, Methods for Assessing Exposure to Chemical Substances in the Ambient Environment (Freed et al. 1983) and Methods for Enumerating and Characterizing Populations Exposed to Chemical Substances (Dixon et al. 1983), respectively.

1.2 Methodology Framework

The generalized approach to assessing worker exposure to chemicals in the occupational environment is illustrated in Figure 1-1. As the figure shows, the first step in the analysis involves determining which occupational settings are sources of exposure to workers. This includes consideration of chemical manufacturing facilities (those facilities where the chemical is produced) as well as industrial, commercial, and trade facilities that store, use, or handle the chemical or products containing the chemical. This analysis is of critical importance because it is the basis for determining the amount of chemical released to the occupational environment and for identifying and enumerating the exposed population.

Upon completion of the source determination step, it will be useful for the assessor to obtain relevant monitoring data. For occupational exposure assessments, two types of monitoring data will be useful: personal/breathing zone monitoring data and workplace monitoring data. If no monitoring data are available, or if such data are available but are not useful in the study because of (1) problems with data quality, or (2) inability to relate the monitored values to specific sources, the

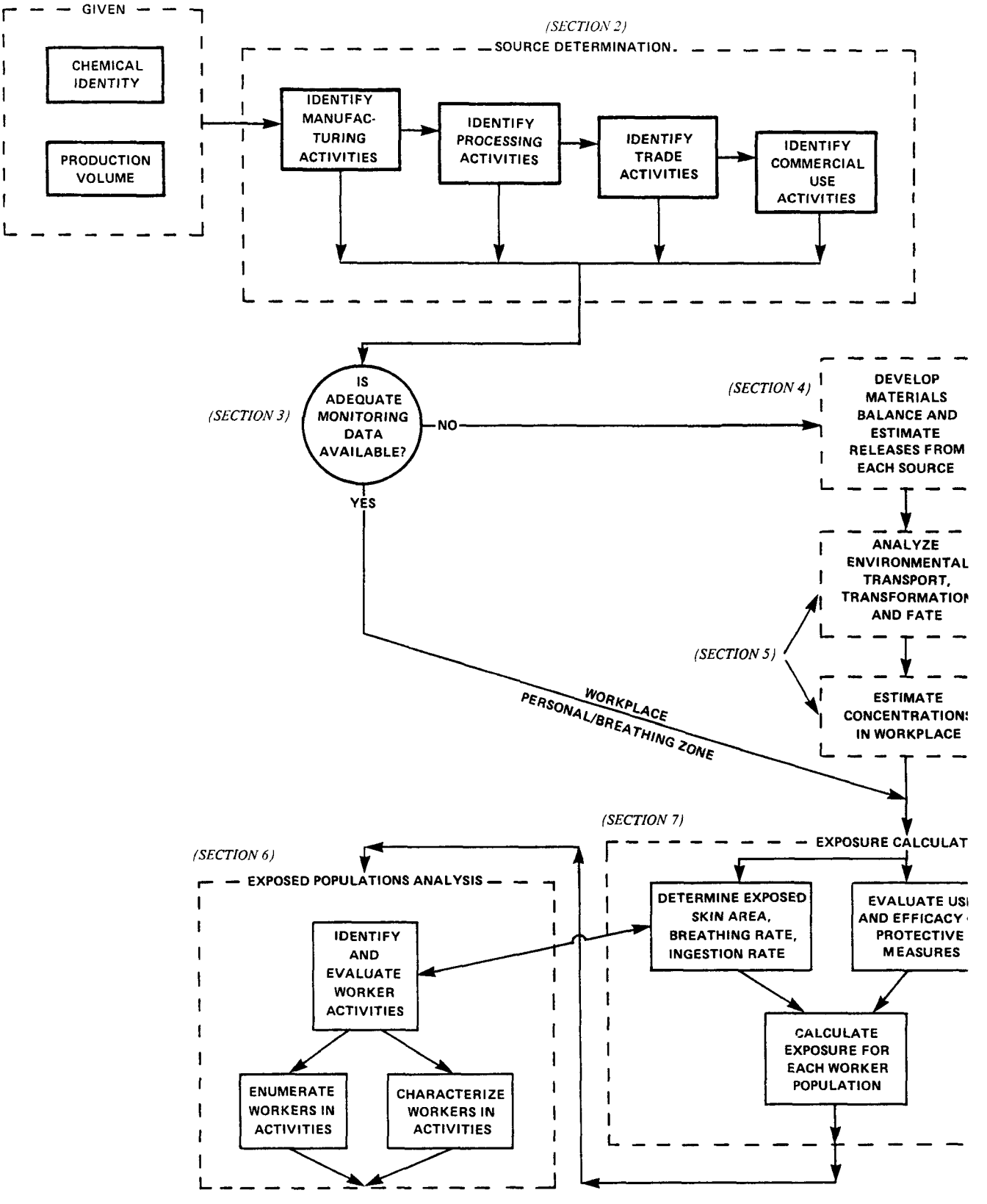

FIGURE 1-1. FRAMEWORK FOR OCCUPATIONAL EXPOSURE ASSESSMENT

assessor can develop an exposure estimate by progressing through the full sequence of analyses indicated in the figure. For each source of exposure (or source category), a materials balance should be developed to determine all sources of release of the chemical to the workplace environment and to estimate the level of release from each source. In addition, any chemical or physical processes that may affect the chemical once it is released should be considered in order to determine its potential for transport or transformation within the workplace.

The results of these two analyses, quantification of the level of chemical release and a determination of the chemical's fate within the workplace following release, provide a basis for estimating concentrations of the chemical within specified media in the workplace. These estimates of contaminant concentrations can then be used in conjunction with data quantifying worker inhalation rates, ingestion rates, and affected skin surface area to estimate the degree of potential exposure.

The worker activity analysis step is useful in determining the amount of air inhaled, contaminant ingested, or chemical contacted by the skin; such factors are highly dependent on both the length of time the worker spends in a contaminated area and the type of activity that he or she is performing. Occupational exposure assessments also consider the effect of protective measures used specifically to limit or reduce worker exposure. Any protective measures (equipment and/or clothing) should be identified and their expected degree of effectiveness quantified. This information allows the assessor to adjust the exposure values to estimate the actual level of exposure incurred by workers using such measures.

The activity analysis identifies those categories of workers that are exposed as a result of each specific activity. This information directly identifies exposed worker subpopulations. Once identified, each exposed subpopulation is then enumerated, or counted, to determine the number of workers experiencing exposure in each activity category. The exposed worker populations are also characterized by age and sex in order to provide such additional information as susceptibility to specific toxic effects of certain classes of substances (e.g., mutagens or teratogens with respect to pre- versus post-menopausal working women), inhalation rates, and skin surface area available for contact. Such determinations will actually be executed in conjunction with the calculation of exposure. Population characterization also identifies subpopulations that may experience a greater risk from a given level of exposure than the population at large, because of the toxicity characteristics of the contaminants.

In some cases, workplace monitoring data or personal/breathing zone monitoring data may be available for the chemical(s) and occupational situations being assessed (see Section 3). In such cases, the assessment process described above can be significantly streamlined, as is illustrated in Figure 1-1. As the name suggests, workplace monitoring measures the ambient concentration of contaminants at particular locations in the workplace. Personal or breathing zone monitoring provides a more direct determination of contaminant concentrations to which individual workers are exposed than does workplace monitoring. Therefore, if such data are available and determined to be of acceptable quality, they can replace estimated concentrations that are based on a materials balance and fate analysis. It is important to note that monitoring data can be used in conjunction with estimates of exposure that are based on source strength when an exposure reduction/control options analysis is conducted.

The analytical framework described above can be applied to assessment of exposure to existing chemicals as well as to new chemicals (such as those evaluated by EPA in the Premanufacturing Notice, or PMN, assessment process). For existing chemicals, monitoring data may be available, thereby allowing a more direct analysis. Monitoring data will not be available for some new chemicals.

1.3 Organization of the Report

As indicated in Figure 1-1, the remaining sections of this report address specific components of the occupational exposure assessment process. Following this Introduction, Section 2 addresses determination of sources of occupational exposure. The acquisition, application, and limitations of monitoring data pertinent to occupational exposure assessments are discussed in Section 3. Section 4 describes the estimation of contaminant releases to the workplace and the development of a source mass balance. In Section 5, contaminant transport and transformation processes that may affect the fate of chemicals released to the occupational environment are described, and means of calculating (estimating) workplace contaminant concentrations resulting from estimated releases are detailed. Section 6 deals with the identification, enumeration, and characterization of exposed worker populations, and Section 7 addresses calculation of the level of exposure experienced by workers. References used in developing this document are presented in Section 8, which is followed by two appendices. Appendix A provides information on certain processes and industries, including details on the organic chemical, lubricant, and plastics manufacturing industries. Appendix B is a general data source reference covering a broad range of information sources useful in conducting occupational exposure assessments.

2. SOURCES

Characterization of sources is a key step in performing an occupational exposure assessment. Source information includes the amount of the chemical produced, its products, where and how it is produced and used, and the releases of the chemical from production, transportation, use, and disposal. In this report, the source analysis has been divided into two separate sections. This section discusses only the amount of the chemical produced, its products, and where and how it is produced and used. The intention of this section is to serve as an organizing tool for the gathering and analysis of monitoring data (information on monitoring data is presented in Section 3). Section 4 discusses the generation of release estimates, which are necessary to estimate concentrations if monitoring data are not available.

The sources of exposure to a chemical in the occupational environment are manufacturing, processing, trade, commercial use, transportation, and disposal. Manufacturing includes not only modifying raw materials to produce an intermediate or finished product but also the mining (extraction) of raw materials (e.g., iron ore). Processing is the modification of a chemical or material from manufacturing to other products; processing may involve several industries. Trade is the distribution of products to commercial concerns or consumers. Commercial use is the application of chemicals or products in a commercial or business setting.

In the occupational setting, the two most important routes of entry of chemicals into the body are inhalation and chemical contact with skin (dermal exposure). Although the gastrointestinal tract is a potential site of absorption, the direct ingestion of significant amounts of chemicals is rare in occupational situations (Proctor and Hughes 1978). The sources section in this document, therefore, emphasizes the potential sources of the toxic chemical for inhalation and dermal exposures. It should be noted, however, that although relatively minor in magnitude compared with inhalation or dermal exposure, gastrointestinal exposure can indirectly occur in occupational settings as a result of inhalation of contaminant particles that are too large to penetrate to the alveoli in the lung. Such particles are removed from the respiratory system by ciliary movement of the mucous in which they become trapped. This contaminated mucous is then either eliminated from the body via expectoration or swallowed. In the latter case, such contaminants do become a gastrointestinal exposure problem. If the toxicological properties of a given chemical differ depending on whether the chemical is inhaled or ingested, distinguishing the degree of exposure via each route is critical to conducting an adequate exposure assessment. Section 7 of this report addresses means of calculating exposure to contaminants ingested either directly or indirectly.

In general, there are two broad categories of occupational releases, both of which are very closely tied to worker activities and exposure. These categories are direct releases and indirect releases. Direct releases are emissions that result in direct exposure to workers involved in activites that cause the release. Examples include releases associated with such activities as maintenance, cleanup, or sampling. Indirect releases are emissions that result in indirect exposure to workers, such as process vent, fugitive, and storage emissions. For example, a worker standing near a pumping operation can be indirectly exposed to emissions from a leaking pump seal.

Examination of the sources of a chemical substance in the occupational environment requires the following major steps:

- Determine manufacturing, processing, and use sites.
- Identify manufacturing, processing, and use processes.
- Characterize worker activities.
- Estimate releases.
- Characterize the substance at the release point.

Characterizing worker activities is briefly discussed in this section; it is discussed in detail in Section 4. Release estimates and the characterization of the substance at the release point are also discussed in Section 4. The remaining two steps are discussed below in subsections 2.1 and 2.2.

To perform each of the above steps, assessors acquire information from the following general sources: direct measurements, review articles, encyclopedias, scientific journal articles, basic research reports, government publications, computerized bibliographic systems and other guides to the published literature, EPA offices and other federal agencies, state or international organizations, custodians of unpublished materials (especially industry contacts), and guides to research in progress. The data sources applicable to the first two steps listed are discussed in the following sections along with guidance on how they are used.

The first step of this exposure assessment method is to review readily accessible information on the chemical. Some references are suggested in Table 2-1; notice that these are mostly encyclopedias which provide a general overview. Information that should be obtained in this step includes the type of chemical, its physical state at ambient conditions, the production volume, manufacturing (or mining) methods, and the chemical's uses. If the chemical is a PMN chemical, this information should be obtained from the Premanufacturing Notice or an analysis of surrogates.

Table 2-1. References Used to Obtain a General Overview of Chemical Manufacture[a]

Title	Author/Date
Encyclopedia of Chemical Technology (24 volumes)	Kirk-Othmer 1978-1984[b], third edition[c]
Chemical Process Industries	Shreve 1967
Chemical and Process Technology Encyclopedia	Considine 1974[c]
Faith, Keyes, and Clark Industrial Chemicals	Lowenheim & Moran 1975
Riegel's Handbook of Industrial Chemistry	Kent 1974
Encyclopedia of Polymer Science and Technology (16 volumes)	Gaylord and Mark 1964-1976[b,c]
Modern Plastics Encyclopedia	Agranoff 1980[c]
Pesticide Manufacturing and Toxic Materials Control Encyclopedia	Sittig 1980[c]
Mineral Commodity Profiles	Bureau of Mines 1980 (Annual Publication)

[a] The choice of which references to examine first can be decided in part by the titles; the first five references are for general chemicals while the last four references are for special products or substances.

[b] Individual volumes in the series are published separately.

[c] Revised or updated editions of these publications should be consulted as they become available.

2.1 Determining Chemical Manufacturing, Processing, and Use Locations

Geographic location information aids in the identification of applicable monitoring and population data; such site specific data are usually the best available for use in occupational exposure assessments. Volume 1 of this report series (Methods for Assessing Exposure to Chemical Substances: Introduction; Versar 1984a) details the information sources to be used in this evaluation.

2.2 Identifying Production and Use Processes and Activities

2.2.1 Manufacturing

(1) Examining Manufacturing Processes. In general, processes used to synthesize the chemical include manufacturing processes or mining and beneficiation operations. The unit processes used in the manufacture of major organic chemicals and lubricants are listed in Table 2-2 and discussed in Appendix A. Usually more than one direct synthesis route exists. For example, there are two synthesis routes for the production of cyclohexane: catalytic hydrogenation of benzene, which accounts for approximately 85 percent of the cyclohexane capacity in the United States, and separation from petroleum liquids, which constitutes the remaining 15 percent (ITE 1980). All synthesis routes must be analyzed because each route has a different exposure potential.

Table 2-3 presents references for information on synthesis routes. This information can also be found in the introductory chapters of other published studies on the chemical. The first two sources of information are usually sufficient to find the synthesis routes for existing chemicals. The other sources of information on this table are used primarily to construct the process flow diagrams for use in process mass balance development (see Section 4). The assessor should check to see whether the chemical or its industry has been reviewed by the government agencies mentioned in part 2 of Table 2-3, especially the U.S. Environmental Protection Agency. Such publications will generally present process flow diagrams. If the chemical is a new substance or a low volume production chemical, such as a dye or a pigment, the process flow diagram may be unavailable in the literature. In that case, a specialty literature search (i.e., review of files that are not normally searched) will be necessary. An example would be checking the patent files, which often contain process information with diagrams. The information from different sources may not be totally consistent; this is usually because process variations occur within synthesis routes from process to process.

The flow diagram shows points of potential release and exposure: locations of vents, valves, and pumps; points at which water contacts the process stream; and operations, such as grinding, that may release

Table 2-2. Unit Processes Used in the Manufacture of Organic Chemicals

Alkylation
Amination by ammonolysis
Ammoxidation
Carbonylation (oxo)
Condensation
Cracking (catalytic)
Dehydration
Dehydrogenation
Dehydrohalogenation
Esterification
Halogenation
Hydrodealkylation
Hydrogenation
Hydrolysis (hydration)
Nitration
Oxidation
Oxyhalogenation
Phosgenation
Polymerization
Pyrolysis
Reforming
Sulfonation

Table 2-3. Information Resources for Synthesis Routes and Their Flow Diagrams

Sources of information	Data provided: Lists different synthesis routes	Data provided: Provides process flow diagrams	Comments
I. References for major chemicals			
Chemical Economics Handbook (SRI 1980)[a]	x	x	Very good source.
Chemical and Process Technology Encyclopedia (Considine 1974)[a]	x	x	Very good source for process descriptons.
Encyclopedia of Chemical Technology (Kirk-Othmer 1978-1984)[a]	x	x	Good source for general chemical overviews.
Chemical Process Industries (Shreve 1967)[a]	x	x	Good source for process descriptions.
Encyclopedia of Polymer Science and Technology (Gaylord and Mark 1964-1976)	x	x	Very good source for polymer process descriptions.
Modern Plastics Encyclopedia (Agranoff 1980)	x	x	Very good source for polymer process descriptions.
Organic Chemical Manufacturing (ITE 1980)	x	x	Excellent source for the organic chemicals that are reviewed.
Kline Guides - Industrial Marketing (Kline 1977a and b; 1978a and b; 1980)	x	x	Good references for chemical, paper, plastics, paint, and packaging industries.
Faith, Keyes and Clark - Industrial Chemistry (Lowenhelm and Moran 1975)[a]	x	x	Major synthesis routes discussed; lists other routes.
Unit Process Guide to Organic Chemical Industries (Herrick et al. 1979)	x		Only lists reactions for major chemicals.

Sources of information	Data provided: Lists different synthesis routes	Data provided: Provides process flow diagrams	Comments
MEDLARS/TDB Toxicology Data Bank	x		Lists synthesis routes.
Reigel's Handbook of Industrial Chemicals (Kent 1974)	x		Some process descriptions. Discusses wastewater treatment and air pollution control technology.
U.S. Petrochemicals, Technologies, Markets, and Economics (Brownstein 1972)[a]	x	x	Only discusses petrochemicals.
Chemical Product Synopsis (Mannsville Chemical Products 1976)	x		Only lists synthesis routes.
Chemical Marketing Journals[a]	x	x	Must search for appropriate issue.
Industrial Minerals and Rocks (American Institute of Mining, Metallurgical and Petroleum Engineers, Inc. 1975)	x	x	Very good source for mining industry.
Industrial Minerals (journal)	x	x	Articles will provide process descriptions.
Mineral Industry Commodity Profiles (Bureau of Mines 1981a)	x	x	Describes mining techniques used for various chemicals.
Minerals Yearbook (Bureau of Mines 1981b)	x	x	Describes mining techniques used for various chemicals.
Methodology for Material Balance (Slimak et al. 1982)			Lists other references that may be useful.

Table 2-3. (continued)

Sources of information	Data provided: Lists different synthesis routes	Data provided: Provides process flow diagrams	Comments
II. Government agencies - general publications			
USEPA - Office of Toxic Substances[a] Office of Air Quality Planning and Standards Office of Water and Waste Management Office of Solid Waste	x	x	If a document has been written on the chemical or its industry, it will usually have process descriptions. The Development Documents for air and water standards are good references.
Dept. of Health and Human Services (HHS); NIOSH[a]	x	x	Control technology assessments for industries are useful. They describe industrial exposure.
Dept. of Labor; OSHA[a]	x	x	Documents on industry have descriptions of occupational exposure.
Dept. of the Interior; Bureau of Mines[a]	x	x	Documents on minerals.
III. Speciality literature search on DIALOG			
Patent files[a]		x	Discusses process and chemical.
Chemical abstracts[a]	x	x	Discusses process and chemical.
IV. Industry public relations material[a]			
Examples of company brochures: Polypropylene (Amoco Chemicals Corporation 1980a) Polystyrene (Amoco Chemicals Corporation 1980b)	x	x	Company brochures on chemicals and/or processes are useful in confirming information from other sources.

[a]These sources address a variety of industries.

particulates. The physical state of emissions is an important determinant of the chemical's properties affecting exposure.

It should be known at this point whether the plant is indoors or outdoors, whether the process is batch or continuous, whether the system is open or closed, and whether the transfers are manual or mechanical. These parameters determine some of the potential occupational exposure.

2.2.2 Processing

Processing industries are those industries that use the product from manufacturing and further process, modify, or fabricate it to produce either another intermediate product (to be further processed or fabricated into a finished product by other processing industries) or a finished product. Table 2-4 lists some of the processes characterized in Appendix A-4. Several steps may be involved in manufacturing a finished product. For example, production of a resin product might involve the following five manufacturing and processing steps: organic chemical manufacturing, resin formulation, resin compounding, resin molding, and resin decorating.

There are two categories of uses: consumptive and nonconsumptive. A consumptive use occurs when the chemical undergoes a chemical reaction to form a new chemical. Nonconsumptive uses are those where the chemical does not react but remains intact, e.g., as a solvent, a deodorizer, or a pesticide (JRB 1980). Generally, subsequent processing involving a chemical that is used consumptively should be examined by the assessor if leaching or off-gassing of residual, unreacted chemical is suspected, or if degradation of the new chemical to form the original chemical is suspected. Examples are leaching of residual vinyl chloride monomers from polyvinyl chloride pipes or formaldehyde off-gassing from particleboards due to hydrolytic degradation of urea-formaldehyde resins used as wood binders. If it is known that no additional releases of the given chemical will occur from such uses, then no additional analysis is necessary. All nonconsumptive uses must be examined up to and including disposal.

The uses of the chemical should be determined in order to identify the type of processing that occurs after it is produced. For most major chemicals, the references listed in Tables 2-1 and 2-3 should provide that information. However, a specialty literature search (usually via DIALOG or ORBIT) may be needed to find obscure uses and to verify the uses found in the references. Product formulations are usually trade secrets; as a result, determining uses and corresponding amounts is extremely difficult.

Table 2-4. Operations Used in Processing Industries and Characteristic Types of Releases

Process types	Contaminant type categories	Contaminant examples (type)
<u>Hot operations</u>		
Welding	Gases (g)	Chromates (p)
Chemical reactions	Particulates (p)	Zinc and compounds (p)
Soldering	(dust, fumes, mists)	Manganese and compounds (p)
Melting		Metal oxides (p)
Molding		Carbon monoxide (g)
Burning		Ozone (g)
		Cadmium oxide (p)
		Fluorides (p)
		Lead (p)
		Vinyl chloride (g)
<u>Liquid operations</u>		
Painting	Vapors (v)	Benzene (v)
Degreasing	Gases (g)	Trichloroethylene (v)
Dipping	Mists (m)	Methylene chloride (v)
Spraying		1,1,1-Trichloroethane (v)
Brushing		Hydrochloric acid (m)
Coating		Sulfuric acid (m)
Etching		Hydrogen chloride (g)
Cleaning		Cyanide salts (m)
Dry cleaning		Chromic acid (m)
Pickling		Hydrogen cyanide (g)
Plating		TDI, MDI (v)
Mixing		Hydrogen sulfide (g)
Galvanizing		Sulfur dioxide (g)
Chemical reactions		Carbon tetrachloride (v)
<u>Solid operations</u>		
Pouring	Particulates	Cement
Mixing		Quartz (free silica)
Separations		Fibrous glass
Extraction		
Crushing		
Conveying		
Loading		
Bagging		

Table 2-4. (continued)

Process types	Contaminant type categories	Contaminant examples (type)
Pressurized spraying		
Cleaning parts	Vapors (v)	Organic solvents (v)
Applying pesticides	Dusts (d)	Chlordane (m)
Degreasing	Mists (m)	Parathion (m)
Sand blasting		Trichloroethylene (v)
Painting		1,1,1-trichloroethane (v)
		Methylene chloride (v)
		Quartz (free silica) (d)
Shaping operations		
Cutting	Dusts	Asbestos
Grinding		Berylium
Filing		Uranium
Milling		Zinc
Molding		Lead
Sawing		

Source: Olishifski et al. 1979.

After a substance's uses are identified, the relevant processes should be described. The processes employed in the conversion of the products of manufacturing to other products are numerous. Appendix A-2, Table 25, and Appendix A-4, list and characterize the processes used in the manufacture of plastics as well as some general manufacturing steps. Table 2-5 lists some unit operations with indirect process releases that have a high potential for exposing workers in the manufacturing industries.

2.2.3 General Industrial Worker Activities

It is important for exposure assessors to be familiar with general industrial worker activities as an aid in the selection of monitoring data; detailed information on the relationship between worker activities and releases is presented in Section 4.

The general worker activities associated with industrial operations (manufacturing and processing) include the following:

1. Drumming of Liquids - Liquids are drained into a drum by either splash loading or subsurface loading. Splash loading is used for most applications and typically leads to more emissions than subsurface loading.

2. Drumming and Bagging of Solids - This operation can be either manual or automated. Automated systems are only economical for larger operations; they significantly reduce worker exposure.

3. Cleaning of Process Equipment - Cleaning of process equipment involves the removal of residual material from such equipment as storage tanks, holding tanks, stills, reaction vessels, and pipework. Although this is generally a short-term activity, it may result in significant levels of exposure.

4. Maintenance - Maintenance involves the mechanical adjustment, alteration, repair, or replacement of process equipment. These operations may be performed externally to the process equipment, through openings, or within process enclosures.

5. Sampling and Analysis - Sampling and analysis operations are used to check the quality of products and intermediates and to check for material losses. A broad range of potential worker exposure is possible because of the diverse procedures used during sampling and analysis.

6. Supervising Equipment Operations - In manufacturing and processing operations, engineers and technicians are needed to monitor and control equipment. In most plants, process controls

Group	Operation
1. Foundry	Abrasive blasting
	Core grinding
	Furnace melting
	Mixing and mulling
	Pouring
	Shakeout
	Tumbling
	Shell core molding
	Die casting
	Calender rolling
2. Material handling	Bag filling and opening
	Barrel filling
	Bin and hopper loading
	Bucket elevator operation
	Conveyor belt operation
	Screening
3. Open-tank operations	Solvent degreasing
	Anodizing
	Dipping
	Metal cleaning
	Stripping
	Pickling
	Molten salt batch treatment
	Bonderizing
	Descaling
	Hard coating
	Parkerizing
	Etching
	Plating
	Electropolishing
4. Painting	Spray painting
	Oven drying
5. Wood working	Joining
	Sanding
	Planing
	Surfacing
	Molding
	Matching
	Sizing
6. Metal working	Buffing and polishing
	Grinding
	Spraying
	Welding
	Cutting
	Chipping
	Soldering

Table 2-5. (continued)

Group	Operation
7. Asbestos 2° operation	Carding
	Crushing
	Drilling
	Grinding
	Pressing
	Screening
	Spool winding
	Spinning
	Twisting
	Weaving
8. Miscellaneous	Wire brushing
	Lathing
	Outboard motor testing
	Grain storage and milling
	Quartz fusing
	Wire impregnating
	Laboratory bench work

Source: Committee on Industrial Ventilation 1980.

and monitors are automated and separated from the actual equipment. In more manually operated plants, equipment is generally situated to minimize direct worker exposure. Consequently, only indirect exposure should occur from equipment supervision.

At this point, the exposure assessor should have a general knowledge of the manufacturing and processing operations and worker activities associated with the chemical of concern; this will be helpful in locating monitoring data (see Section 3). If monitoring data are not available, this information will provide a starting point for estimating releases from manufacturing and processing operations (see Section 4).

2.2.4 Activities of Wholesale and Retail Trade

The activities of workers in wholesale and retail trade can be grouped in six classes: loading, storage, packaging, shelving, demonstration, and sales. The activities may be sources of occupational exposure in three possible ways:

- Accidental loss of product through package failure (e.g., loading, storage, shelving).
- Lack of packaging or insufficient containerization of product with resultant atmospheric emissions (e.g., loading, storage).
- Direct contact with a product (e.g., loading, packaging, demonstration).

The relationship between the activities of wholesale and retail trade are explained in more detail in Section 4.

The activities of commercial use include most workplace situations outside manufacturing and trade; this sector is dominated by the service industries. The activities of this use category are not listed here because they are so numerous and diverse; more information on these activities is presented in Section 4.

3. MONITORING DATA

The assessment of exposure to a chemical substance should quantitatively describe the level, duration, and frequency of human contact with the substance, as well as the route of such exposure. Quantitative estimates of exposure are generally based on monitoring data or simulation models.

Where sufficient monitoring data exist, it may be possible to trace the pathway of a substance from the point at which exposure occurs to its source. Limited monitoring data are also useful. They can indicate the quantity of a chemical at a particular location, at a specific point in time. They can also be used to evaluate the validity of model-generated estimates.

To be properly utilized, monitoring data must be placed in perspective as to their validity. Even in situations where some data have already been collected, supplemental data will often be necessary because certain deficiencies in existing data will limit applicability and reliability. Quality assurance/quality control measures used may be unknown or inadequate. Data may be obsolete because of changes in operating conditions or control technologies. Therefore, before using monitoring data, the assessor should ask the following questions:

- Are the data representative of current normal conditions, or do they reflect obsolete conditions or temporary aberrations resulting in high or low concentrations?

- Are the data accurate and precise? Were sampling and measurements performed in the most appropriate manner?

- Does the sampling design result in statistically valid data?

- Where was the monitoring device located with respect to the source(s)?

Data quality is a function of the accuracy, precision, representativeness, comparability, and completeness of the data collected. In general, data quality requirements (in terms of defensibility of the results obtained) in monitoring studies usually increase according to the intended data use in the following sequence: (1) screening studies to determine the presence or absence of pollutants; (2) quantitative studies to determine concentrations of pollutants for source characterization, analysis of environmental fate, and exposure assessment; (3) quantitative studies to determine concentrations of pollutants for use in development of control strategies; and (4) quantitative studies to determine concentrations for the purpose of supporting enforcement actions. It should be noted, however, that this

hierarchy does not necessarily apply to the quantification level required by these four use categories. For example, enforcement monitoring may only require quantification of values over an action level, and the data generated in such cases may thus not be detailed enough to support a detailed exposure assessment.

Data quality aspects pertinent to the use of monitoring data in occupational exposure assessment are discussed below in Section 3.1. In addition, the type of monitoring conducted and the sample collection techniques used also have a significant effect on how monitoring data are interpreted and exposure is measured. Section 3.2 discusses the types of monitoring used in the workplace; the following section (3.3) describes commonly used sample collection techniques. Exposure measurement strategies are delineated in Section 3.4, and Section 3.5 summarizes readily available occupational monitoring data sources.

3.1 QA/QC Considerations

Whether newly generated data or existing data are used in an occupational exposure assessment, the data must meet the quality criteria dictated by their proposed use. In the case of new data, satisfying quality requirements may be a rather straightforward undertaking. Data quality goals in terms of precision and accuracy can be achieved by adhering to a well-structured monitoring program designed from a statistically sound sampling plan. Quality standards are prescribed in relation to the research questions and study objectives; monitoring activities are then organized and planned to ensure that these standards are met. Detailed guidance for implementing QA/QC procedures in the design and conduct of monitoring studies can be obtained from USEPA 1980a and USEPA 1980b.

Each of the potential data quality problems listed above should be addressed before available data are applied to an occupational exposure assessment. Evaluation guidelines to help determine the relative significance of each of these problem issues are presented in this section. Existing data sets should be evaluated against these guidelines, which pertain to:

- Sample design.
- Sample collection activities in the field.
- Data entry and processing.

The major consideration in evaluating existing monitoring data is the motivating factor or objective for which the data were generated. To address this consideration, this section assumes that documentation for the data sets being evaluated is available; that information relevant to each major component of the study in which the data was developed can be extracted; and that a QA/QC plan adequate to resolve any question of data

quality is available. Without the appropriate documentation, a discussion of existing data evaluation is futile, and the use of such data will, at best, be limited.

3.1.1 Sample Design

This component requires an evaluation of the data's applicability to the physical problem (research question) under investigation and the appropriateness of the collection/measurement systems or processes used. The following questions should be answered:

- What were the specific research objectives for which answers were sought through data development?
- Did the parameters monitored reflect the research objectives?
- Did the media in which the parameters were monitored reflect the research objectives?
- Were the sampling methods proposed suitable for the media and parameters monitored?
- Were QC elements such as inter-lab analyses and peer review of analyses results incorporated into the design?
- Did the study attempt to correlate source and pathway monitoring activities?
- Were sampling frequency and duration adequate and representative of the conditions surrounding the research objectives?
- Was allowable survey error specified?

3.1.2 Sample Collection

Adherence to established protocols during sample collection should be determined. The following questions should be answered:

- Were standard operating procedures employed?
- Were established sample collection, preservation, storage, and transport protocols used?
- Were control, blank, and spiked samples provided?
- Were replicate samples provided?

3.1.3 Analytical Measurement Systems

The laboratory procedures through which monitoring samples were analyzed must be evaluated for adherence to established protocols. Specific questions that should be answered are:

- Were proper protocols used in the analysis of samples?
- Were standard operating procedures used?
- Were issues surrounding the limits of detection addressed?
- Were positives confirmed by other means of analysis?
- Were instruments calibrated accurately?
- Were results of blank, control, spiked, and replicate sample analyses maintained?
- Were precision and accuracy determinations documented?

3.1.4 Data Entry and Processing

Evaluations of the data entry and processing aspects of the existing data as well as of data documentation and review should be conducted. Significant questions in this portion of the evaluation include:

- Were data entry QC checks performed?
- Does the number of significant figures presented in the data set correspond to the observed variance of the measurements?
- Were confidence interval estimates made?
- Was sampling program documentation given peer review? Are results available?
- Was an estimate of total sampling measurement error made?

From a pragmatic standpoint, it is likely that existing data will often not meet the current QA/QC requirements for development of new data. In such cases, the assessor should exercise extreme caution and considerable professional judgement in deciding to what extent (and for what purpose) the data can be used.

3.2 Types of Monitoring

Occupational exposure can occur from manufacturing, transportation, storage, processing, disposal, or industrial use of a chemical substance or a material containing that substance. To determine exposure from a chemical substance, two categories of air monitoring are generally used: personal/breathing zone monitoring and workplace monitoring (area monitoring or environmental surveillance). Biological contaminant body burden monitoring is a third type of occupational exposure monitoring.

3.2.1 Personal/Breathing Zone Monitoring

Personal monitoring is the measurement of an employee's exposure to airborne contaminants by a device worn by the person being sampled and placed as close to the contaminant's route of entry to the human body as possible. In breathing zone monitoring, a second person holds the sampling device in the breathing zone of the person being sampled.

3.2.2 Workplace or Area Monitoring

Occupational environmental monitoring is the measurement of contaminant concentrations in the workplace (which may or may not be enclosed); measurement devices are placed close to the worker's normal work area. Samplers are usually stationary and may remain in place for an extended period of time.

3.2.3 Biological Monitoring

Biological measurements usually determine the concentration of a specific agent in the blood, adipose tissue, or urine, although samples of other biological material such as hair or nails may also be useful. Such measurements represent the body burden of that agent and can be used as a monitor of the worker's exposure to a specific substance. Biological levels of a substance will indicate the combined level of worker exposure; they can be used to assess where excessive exposures have occurred and when protection from further exposure is necessary (Piotrowski 1977).

There is currently no straightforward way to relate body burden to exposure, although work is underway to identify and quantify such relationships. There is similarly no method to determine the pathway from which each increment of exposure, measured by body burden, was derived. Biological measurements are best used at present as a qualitative indicator that exposure has occurred.

3.3 Sample Collection Techniques

The Occupational Safety and Health Administration (OSHA) health regulations require that an employee's exposure be measured by any combination of long-term or short-term samples that represent the employee's actual exposure.

The National Institute for Occupational Safety and Health (NIOSH) Manual of Sampling Data Sheets and its supplement describe sampling methods for nearly 30 substances. It is the only available compendium of such methods. Most of these methods have been recommended to OSHA for use in their compliance program. Except for a few compounds, occupational exposure to these 30 substances is regulated by 29 CFR, Part 1910.

3.3.1 Types of Samples

As mentioned above, the three basic types of occupational environmental sample collection techniques are personal/breathing zone, general area, and biological samples:

1. Personal/breathing zone - in personal monitoring, the sampling device (a dosimeter) is directly attached to the employee (clipped to the worker's collar or lapel, for example), who wears it continuously during all work and rest operations. To obtain breathing zone samples, the sampling device is simply held at the "breathing zone" of the employee; the "breathing zone" is that air that would most likely be inhaled by that employee.

2. General area ("general air") - the sampler is placed in a fixed location in the work area generally occupied by employees.

3. Biological samples - For occupational body burden monitoring studies, breath, urine, and hair samples can be collected fairly easily and without excessive imposition on the persons sampled. A subject's exhaled breath can be collected by a portable spirometer, and the samples analyzed in the same fashion as other air samples. Other possible body burden samples that can be useful in occupational exposure assessments include blood and, where lactating mothers are involved, mother's milk. However, obtaining such samples is considerably more invasive than is the case for the sample types addressed above. Therefore, such data may only be generated in occupational exposure verification studies or for assessment of exposure to especially high risk contaminants.

For the determination of employee exposure, it is preferable to use exposure data obtained by the personal or breathing zone methods; these are direct methods. If exposure data obtained by the less direct "general air" method are used, an analysis to determine how accurately the general air data represent employee exposures should be included. This may be accomplished by comparison between general air and personal or breathing zone samples to demonstrate equivalency, which is very difficult (Leidel et al. 1977). If this analysis of equivalency is not included, use of "general air" data for exposure assessment may make the estimates inaccurate enough to allow only a screening level assessment to be made.

3.3.2 Employees Sampled

Occupational monitoring data are often collected by OSHA or by employers using OSHA's guidelines. Among those guidelines are recommendations regarding which employees should be monitored. A less-than-random choice in sampling strategy may introduce biases in the resultant data that must be taken into account in an exposure assessment.

The following three categories of employee sampling are required by OSHA:

(1) Maximum risk employee. Once exposure above the action level has been identified, OSHA requires that employers sample the "maximum risk employee." Generally, the employee closest to the source of hazardous material is selected to be at maximum risk. OSHA suggests that employee mobility and work habits and air movement patterns be considered as well (Leidel et al. 1977). These factors are difficult to evaluate and may be neglected by most exposure samplers.

Monitoring data based on the maximum risk employees' exposure will be skewed to the high end of the range of concentrations in the workplace. It may be difficult to ascertain that the data were based on the maximum risk employee. If such a determination is possible, it should be stated that the exposure approximates worst-case conditions.

(2) Random sampling of a group of workers. If a maximum risk worker is not identified for a given operation, random sampling of a group of workers is performed. The objective of the method is to select a subgroup of adequate size; the probability that the random sample will contain at least one worker with high exposure will then be high. This procedure is carried out by (1) determining the number of employees to be sampled, then (2) randomly selecting the employees to be sampled (Leidel et al. 1977). Data collected in this manner are fairly representative of conditions throughout the workplace.

(3) Sampling for periodic exposure. OSHA recognizes that infrequent exposure to toxic substances may occur during operations such as process/product sampling or cleaning. Employers are required to sample during those activities if they believe that significant exposures are likely to occur. It may not be possible to distinguish such data from other OSHA data.

3.4 Exposure Measurement Strategies

Although there is no "best" strategy applicable to all occupational situations, some strategies are clearly better than others. Guidelines are presented in this section to aid assessors in comparing data obtained via alternative strategies.

The accuracy required of airborne concentration measurements in the OSHA health standards considers (Leidel et al. 1977):

1. The random variations in the sampling device (repeatability of the sampling device).

2. Random variations in the analytical procedure (repeatability of the replicate analyses of a given sample).

3. Systematic errors in the sampling method (determinate errors or bias in the collection technique).

4. Systematic errors in the analytical procedure (determinate errors or bias in the analysis).

The term "accuracy" refers to the difference between a measured concentration and the true concentration of the sample. It includes both the random variation of the method (referred to as precision) and the difference between the average result from the method and the true value.

The accuracy of a sample collection method should generally have a statistically-determined confidence level of at least 90 percent. To gauge the accuracy of the sampling and analytical methods used in obtaining exposure measurements, the following evidence should be sought:

1. The use of NIOSH-certified detector tubes.

2. Field calibration procedures for sampling equipment.

3. The analysis of samples at a laboratory participating in an industrial hygiene quality control program, for example one conducted by American Industrial Hygiene Association.

Data collected under the auspices of NIOSH and OSHA can usually be easily evaluated for accuracy. Exposure concentrations are usually reported as 15-minute "ceiling standard" measurements or as an eight-hour time-weighted average. Each is defined and discussed in the following section.

3.4.1 Sample Measurement

Table 3-1 describes the four types of measurements taken to determine exposure. Grab samples are taken when it is impossible (due to limitations in measurement methods, e.g., direct reading meters or colorimetric detector tubes) to collect either a single sample or a series of consecutive samples whose total duration approximates the period for which the standard is defined.

3.4.2 Length and Duration of Measurement

(1) Time-weighted average (TWA). To determine the time-weighted average exposure of an employee, a detailed description of "where he is when" must be obtained. Typically, the employee may be exposed to several different short-term concentrations during a workshift due to changes in job assignment, workload, ventilation, and industrial processes. The TWA evolved as a method of calculating daily or full-shift average exposure by weighing the various short-term average concentrations. This method is the equivalent of integrating the concentration values over the total time base of the TWA, which can be determined by the following formula:

$$\frac{\sum_{i=1}^{i=r} (T_i) \cdot (C_i)}{T_{total}} = TWA \qquad \text{(Equation 3-1)}$$

where

T_i = Duration of incremental exposure.
C_i = Concentration of a specific air contaminant during the incremental time period Ti.
T_{total} = Total work time per shift; eight-hour workday.

Guidelines for comparing different exposure measurement strategies for the TWA standard are presented in Table 3-2.

Occupational exposure variation (intraday or interday) of specific work operations is practically impossible to predict. Intraday and interday variations, as measured by the geometric standard deviation (GSD), typically lie between 1.25 and 2.5 (Leidel et al. 1977, Ayer and

Table 3-1. Types of Measurement Samples To Be Obtained for Assessment of Occupational Exposure

Type of sample	Definition
Full period, single sample measurement	Sample taken for the full period of 8 hours for the 8-hour TWA standard and 15 minutes for a ceiling standard.
Full period, consecutive samples measurement	Several samples (equal or unequal time duration) obtained during entire period appropriate to the standard.
Partial period, consecutive samples measurement	One or several samples (equal or unequal time duration) obtained for only a portion of the period appropriate to the standard.
Grab samples measurement	A number of samples taken for short periods of time (less than 1 hour each and generally only minutes or seconds). Taken at random intervals over the period of time for which the standard is defined.

Source: Leidel et al. 1977

Burg 1973). Exposure variation and the precision and accuracy of sampling and analytical methods were taken into consideration in developing the guidelines by Leidel et al. (1977) presented in Table 3-2.

(2) Strategy for a ceiling standard. Samples obtained for the determination of compliance with ceiling standards are treated in a manner similar to that used with samples taken for comparison with TWA standards. However, two important differences should be noted.

First, the samples obtained for comparison with ceiling standards are best taken in a nonrandom fashion. For example, available knowledge relating to the area, individual, and process being sampled should be used to obtain samples during periods of maximum expected concentrations of the substance.

Second, samples taken for comparison with ceiling standards are usually taken for a much shorter time period than those obtained for calculating TWAs. Measurements for ceiling standards should consist of 15-minute samples obtained in an employee's breathing zone; alternatively, consecutive samples totaling 15 minutes can be used. A minimum of three measurements should have been obtained during one work shift to provide a good estimation of the worker's exposure for that shift (Leidel et al. 1977).

3.5 Available Information on Occupational Exposure

It may be helpful to the exposure assessor to be aware of the various exposure limits and standards in effect when monitoring data are collected. For example, a recognized hazardous substance will be subject to an occupational exposure standard; knowledge that such a standard exists may lead to the identification of useful information that has been gathered by a public agency such as NIOSH. The following organizations are involved with occupational exposure standards:

- American Conference of Government Industrial Hygienists (ACGIH) - Can provide information on Threshold Limit Values (TLVs), industrial ventilation guidance, and air sampling and analysis instrumentation. Background information and the rationale underlying the TLVs are also available.

- American National Standards Institute (ANSI) - Can provide industry voluntary health and safety standards (as contrasted against governmental mandatory standards). Background information and underlying rationale for such standards may be available in some cases.

Table 3-2. Guidelines for Comparing an Eight-hour TWA Standard

Type of measurement	Basis for ranking (in order of decreasing desirability)
Full period, consecutive samples	Yields narrowest confidence limits on exposure estimate. Two consecutive, full period samples (about 4 hours each for an 8-hour TWA standard) provide sufficient precision and are recommended as the "best" measurement to make.
Full period, single sample (one 8-hour sample)	Appropriate sampling and analytical method must be available.
Partial period consecutive samples	Major problem is how to handle the unsampled portion of the period. In reality, the measurements are valid only for the duration of the period that the measurements cover (as 6 out of 8 hours). Professional judgment can be used to infer exposure during unsampled period. Knowledge of operations(s) is required. Sampled portion of period should cover at least 70-80 percent of the full period.
Grab sample	Confidence on exposure estimate is very low, and one has to have a low exposure average to statistically demonstrate compliance. Optimum number of samples to take is between 8 and 11 if employee's operation and work exposure are relatively constant during the day. If employee's operation and work exposure are not constant throughout the day, then at least 8 to 11 grab samples should be taken during each period of expected differing exposure. It is desirable to choose the sampling periods in a statistically random fashion.*

* Random sampling is sampling any portion of the work shift, each portion having the same chance of being sampled as any other.

Source: Leidel et al. 1977

- American Industrial Hygiene Association (AIHA) - Develops Hygienic Guides for specific chemicals. These contain chemical and physical property information, summaries of chemical toxicity testing, summaries of recommended standards (NIOSH, etc.), and reference sources for this information.

- National Institute for Occupational Safety and Health (NIOSH).

- Occupational Safety and Health Administration (OSHA).

Readily available data from NIOSH and OSHA are summarized in the following sections.

3.5.1 National Institute of Occupational Safety and Health

Much information has been collected by NIOSH concerning employee exposure to chemical substances. Of most importance are:

1. Various reports dealing with exposure to substances in specific work settings. These include Health Hazard Evaluation Reports, Industrywide Studies, and Control Technology Assessments. These reports are prepared by NIOSH and its contractors and include actual sampling and analysis data gathered in the workplace. In order to most efficiently determine what documentation is available through NIOSH concerning given occupational exposure situations (chemical-specific, plant-specific, industry-specific), the assessor should contact Mr. Rodger Tatken, NIOSH Technical Information Branch, Cincinnatti, Ohio, 513-684-8328.

   The Health Hazard Evaluation (HHE) reports are developed at the request of either employers or employees. They are based on information obtained by NIOSH through actual site visits. Companies know when NIOSH will conduct such inspections, and the reports reflect the conditions observed by NIOSH inspectors at the time of the visit.* They contain a range of plant-specific and chemical-specific information including a description of the plant and its workforce, an identification of the products produced, description of the health and safety program in force at the plant, toxicological information for the chemical(s) under evaluation, the sampling and analytical methods used and analytical results obtained, and conclusions and recommendations.†

---

*Personal communication between James (Jay) Jones, NIOSH, and L. Schultz, Versar Inc., November 28, 1984.

†Personal communication between Thomas Bloom, NIOSH, and L. Schultz, Versar Inc., November 28, 1984.

Industrywide Studies are primarily epidemiological studies of the effects of specific workplace chemicals throughout given industries. However, monitoring data generated by NIOSH in developing these reports are presented, as is any existing exposure incidence information generated by the industry under scrutiny.*

Control Technology Assessments are usually conducted on a process-specific or industry-specific basis, although occasionally chemical-specific reports are also generated. These studies evaluate the effectiveness of various types of exposure controls used in actual workplace settings. In developing these documents, NIOSH may conduct monitoring in the workplace to identify the best control technology for given situations. Process controls, equipment controls (ventilation, etc.), and work practices are all evaluated to varying degrees in these studies.

2. NIOSH Criteria Documents. Annually, about 24 criteria documents are produced. They cover single chemicals, classes of chemicals, physical agents, and industrial processes, and they recommend standards for occupational exposure. These documents, which are probably the single best source of information on occupational exposure, are in-depth reviews of information from the National Occupational Health (NOHS) Survey (described below), other investigations carried out by NIOSH, and international scientific literature. They consider both published information and new research findings and sometimes reveal that a hazard is more severe than was initially thought.

3. The National Occupational Hazard Survey. This two-year field study, initiated in 1972, was intended to describe the health and safety conditions in the American work environment. A chief concern was the determination of the extent of worker exposure to chemical and physical agents. The survey involved the examination of 4,636 business establishments in 67 metropolitan areas selected by the Bureau of Labor Statistics as representative of the nonagricultural businesses covered by the Occupational Safety and Health Act of 1970. The survey identified approximately 8,000 chemical substances and physical agents as potential hazards. Data in the NOHS system can be accessed based on chemical name, product trade name, and generic product type to obtain quantitative output that includes the product formulation, the estimated number of plants wherein exposure occurs, and the estimated number of people experiencing the exposure. Output reports are aggregated to the national level based on the survey data. Also, although this data base contains data for over 72,000 products, the product formulation data for approximately 1/3 of these products are considered trade secrets by their producers, and therefore the formulation data cannot be released by NIOSH.

---

*Personal communication between Thomas Bloom, NIOSH, and L. Schultz, Versar Inc., November 28, 1984.

Despite the fact that the NOHS data base has been useful for assessing occupational exposure to chemical substances, it has several characteristics that limit its usefulness. Because the data were collected 10 years ago, some may be obsolete. Additionally, the data collection method relied to a large extent on the observations of a surveyor, who interviewed plant management and personnel and toured the plant, noting the number of employees potentially exposed to chemical substances. It is likely that some of the data reflect judgments by the surveyor, even though the survey procedures were designed to minimize subjectivity.

Furthermore, although over 4,500 different facilities were surveyed and data were extrapolated to a nationwide scale, certain types of facilities were excluded from the survey. Those excluded were (1) classified, because of national security, (2) engaged in agricultural production, (3) engaged in mining, other than oil or gas production, or (4) private households.

Finally, some of the chemicals evaluated by the survey may no longer be used or perhaps may be currently used at levels lower than those reported by the survey.*

Despite its limitations, the NOHS data base has been useful in the identification and quantification of occupationally exposed workers. A similar survey, termed the National Occupational Exposure Survey (NOES), was initiated in October 1980 with data collection beginning in November of that year. As of early 1985, data acquisition efforts for this survey had not been completed. NIOSH is still in the process of obtaining trade name product formulation data from the buisnesses surveyed. It is specifically this portion of the data base that allows an effective data retrieval for chemical exposure assessments, and it is now projected that this final data acquisition/tabulation effort will be completed and the data base made available to support such studies by spring of 1986. It should also be noted that the list of facility types included in NOHS was varied somewhat in the NOES survey. For example, agricultural facilities such as grain elevators and preparation services (i.e., facilities not generally sited in a scattered fashion in rural areas) were added to the survey. Conversely, certain financial institutions, most wholesale and retail trade establishments, and state and local government facilities were deleted from the study. Essentially the same guidelines used for the NOHS survey were employed in the design of the NOES†. (Contact Mr. David Sundin, NIOSH, 513-684-4491, for information on the status and availability of data from NOHS or NOES).

---

*Personal communication between S. Mallinger, OSHA, and P. Desai, Versar Inc., February 1982.

†Personal communication between Dave Sundin, NIOSH, and L. Schultz, Versar Inc., November 1984.

NIOSH can also generate output in the form of maps which illustrate probable locations of occupational exposure for specific chemicals. The maps allow the access of data from a variety of perspectives, and at different levels of geographic resolution. The following list identifies the map types currently available:

- Distribution of potential exposure to selected chemical agents by Standard Industrial Classification (SIC) code.
- Frequency distribution analysis.
- Distribution of facilities within specified SICs.
- Distribution of facilities where workers are potentially exposed to selected chemical agents.
- Distribution of workers potentially exposed to selected chemical agents.
- Distribution of workers potentially exposed to a group of chemicals related to a specific health effect.
- Rank order listing of potential exposures by county.
- Listings of industrial facilities in which potential exposure is expected.

3.5.2 Occupational Safety and Health Administration

Monitoring for exposure in the workplace is performed for compliance with the OSHA standards and is conducted both by employers and by OSHA (Leidel et al. 1977). Although they have never required industry to supply monitoring data, OSHA does try to elicit such information voluntarily. One can request this information from companies directly, but companies are not obligated to provide it because it can be considered confidential.*

OSHA inspections of manufacturing facilities can include the following: (1) general scheduled inspection; (2) inspection in response to an accident; (3) inspection in response to a complaint; (4) a follow-up to a previous inspection, and (5) monitoring inspection. Information collected during an OSHA inspection includes the name and address of the establishment inspected; the date and type of inspection; the level of exposure and severity rating; the OSHA standard under which the inspection occurred; the number of employees at the facility and the number of persons exposed to the hazardous agent; and the SIC codes and

---

*Personal communication between S. Linhard, OSHA, and P. Desai, Versar Inc., December 1981.

corresponding job titles affected. The inspection records and test results are retained at the OSHA area office; these records represent a good source of independent measurements outside of industry.

The information collected by OSHA during their inspections is entered into a computerized system, the Management Information System (MIS). Information in MIS can be requested by anyone.* The health effects data contained in the MIS are organized into four reports (OHDS 1,2,3, and 4). Of these, OHDS 1,2, and 4 are useful in conducting occupational exposure assessments. OHDS 1 is an overall summary of health effects by chemical. It summarizes sampling conducted and presents results in comparison with the Permissible Exposure Level (PEL) for the chemical under evaluation. OHDS 2 provides the same type of information as does OHDS 1, but it is organized on a SIC code basis. OHDS 4 provides detailed reports of individual inspections. These contain the actual sampling results obtained for given site.†

Prior to 1979, there were several limitations in OSHA monitoring data. The inspection records were not in a standard format. Some inspection reports were very exact, describing the duration and levels of exposure for each process step. Other reports provided little information on the process involved or the resultant exposure. Actual levels of exposure were not recorded; instead, results were presented by severity codes, only in ranges, and only when the OSHA standard was exceeded. Also not recorded were the location of the exposure, the number of employees exposed, or whether safety measures, such as respirators, were used.

The monitoring data from state OSHA programs present some difficulties in availability and utility. Information from the states has to be requested from each state because the data are not automatically channeled to the federal OSHA offices. Industries were not uniformly monitored, and categories of violation (e.g., serious, nonserious, or repeat ratings) were not consistent. Information concerning such violations was not recorded, rendering understanding of an inconsistency impossible.Δ

When inspections were conducted in response to a complaint, the inspection was directed at the complaint area and not at the entire facility. Consequently, because about 80 percent of the inspections resulted from complaints (due to manpower limitations), the data were of limited use for estimating exposure under "normal" conditions.

---

*Personal communication between C. Bascesta, OSHA, and P. Desai, Versar Inc., November 1981.

†Personal communication between Bill Wentling, OSHA, and L. Schultz Versar Inc., November 1984.

ΔPersonal communication between S. Mallinger, OSHA, and P. Desai, Versar Inc., February 1982.

For the above-mentioned reasons, the OSHA monitoring data gathered prior to 1979 were not conducive to industry-wide extrapolation. Significant changes made in 1979 by OSHA in the data base will facilitate the extrapolation of monitoring information to specific cases. Now recorded are: the measured TWA, job titles of people sampled, the SIC code, the exposure ceiling, whether a citation was issued, and if so, for what. These computerized results are now recorded in a standard format and provide more accurate detail from 1979 forward. A sample printout is provided in Appendix B.

In spite of this, it is still not always feasible to make extrapolations to the whole of industry from OSHA monitoring data. For example, data on the tannery industry are incomplete. Furthermore, although the specific process during which exposure occurs is recorded, this information is not entered in the computerized data base and thus is not readily available.*

Other information available from OSHA is contained in the OSHA Docket Files. This information consists of documents used as evidence for establishing OSHA standards. Documents include data from (1) industry - their comments on the proposed standards, data from health effects studies, and results of their occupational sampling and monitoring programs, and (2) trade unions or associations - their responses to proposed standards, records of occupational disease, and estimations of occupational exposure.

It is apparent from the preceding discussion that although OSHA may provide the best available occupational monitoring data, there are limitations inherent in their use. One problem is that the data base is far from complete; data are simply absent for many chemicals and potential exposure situations. The data that are available generally represent high exposures, and extrapolation throughout an industry or occupation can result in overestimation of occupational exposure. These problems, however, do not preclude the use of OSHA data. They simply point out the importance of using the data cautiously.

3.6 Summary

To assess occupational monitoring data for a given chemical, one needs to proceed as follows:

- Locate or identify exposure monitoring data, as measured in typical occupational settings.

---

*Personal communication between C. Oliver, OSHA, and P. Desai, Versar, Inc., December 1981.

- Evaluate the obtained monitoring data in terms of their quality (QA/QC), representativeness (regarding worker categories or occupational situations), and appropriateness.

- Compare the data to any model projections that have been generated.

Occupational exposure monitoring data can be obtained by (a) searching the literature manually or on-line; (b) searching NIOSH publications, e.g., criteria documents, walk-through surveys, support documents for criteria standards; (c) searching OSHA records on monitoring via the Management Information System (MIS) on-line; (d) searching documents stored in the OSHA Docket Office, especially for records of monitoring as submitted by industry and trade unions; and (e) searching the National Occupational Health Survey (and the National Occupational Exposure Survey once it becomes accessible).

The evaluation of monitoring data quality and representativeness should address the extent to which a set of data represents the actual exposure of the worker. The following sections in this report should be consulted to aid in the evaluation of monitoring data:

Section 3.3 Sample Collection Techniques

Section 3.4 Exposure Measurement Strategies

Section 3.5, Available Information on Occupational Exposure, should be consulted for guidance in locating established standards and information on actual occupational exposure.

4.0 ESTIMATING CONTAMINANT RELEASES IN THE OCCUPATIONAL SETTING

4.1 Introduction

Occupational exposure to chemical substances associated with industrial manufacturing, processing, distribution, and use of products may result from chemical releases into workplace or ambient air and from direct contact with contaminated equipment, chemical substances, or processed material. The following are categories of chemical releases that may contribute to occupational exposure:

1. Releases from worker activities associated with industrial operations.

2. Releases from industrial stacks, process vents, fugitive sources, storage sources, and secondary sources in industrial processes.

3. Releases from products during activities associated with wholesale and retail trade.

4. Releases during commercial use of products.

This section discusses methods for estimating contaminant release rates in the occupational setting. Section 4.1.1 discusses the categories of chemical releases and their relations to potential occupational exposure. Section 4.1.2 describes the general mass balance approach to predicting contaminant releases in lieu of monitoring data. Section 4.1.3 presents algorithms that can be used within certain frameworks for estimating contaminant release rates from sources associated with industrial manufacturing, processing, distribution, and use of products.

4.1.1 Types of Contaminant Releases

Generic worker activities associated with industrial operations include drumming of liquids, drumming and bagging of solids, cleaning, maintenance, and sampling and analysis. These generic activities, either singly or in combination, are basic components of many broader industrial operations such as process troubleshooting; process development, which may include full-scale factory trials of new manufacturing procedures or technologies; and equipment installations. Chemical releases associated with broader industrial activities can be estimated by integrating predicted releases from all generic activities making up the overall operation.

Chemical releases associated with generic worker activities are generally short-term and periodic. Releases can lead directly to inhalation, ingestion, and dermal exposures for the workers performing

the activity and indirectly to inhalation and ingestion exposures for others in the workplace.

Chemical releases from industrial stacks are dispersed in the ambient air and thus primarily contribute to contamination of the ambient environment rather than the workplace. Chemical releases from process vents occur during the operation of the process and, depending on the sizes and configurations of the vent and nearby buildings and structures, may contribute significantly to contamination of workplace air due to building wake effects (see Section 5 for discussion of this phenomenon). Chemical contaminants from industrial stacks and process vents generally are passed through an emission control device (e.g., electrostatic precipitators, flares, incinerators) prior to discharge to ambient air. These control devices may be quite effective in reducing volatile organic compound (VOC) releases to ambient, and possibly workplace, air. See Versar (1984b) for a detailed review of the efficiencies of combustion control devices for process sources in the synthetic organic chemical manufacturing industry (SOCMI). See Freed et al. (1983) for methods to assess exposure to chemical substances in the ambient environment.

Fugitive releases are principally emissions from leaks in the process equipment and from defective, inadequate, or worn seals in equipment such as pumps, valves, and compressors. They occur as a result of normal plant operations and are due to thermal and mechanical stresses. Releases from fugitive sources are initially releases to workplace air and, subsequently, ambient air (i.e., fugitive releases in an indoor workplace eventually are exhausted to the atmosphere through ventilation/exhaust ducts; fugitive releases in an outdoor workplace initially contaminate workplace air and, eventually, migrate into ambient air). Fugitive releases can be effectively controlled through leak detection and repair (LDAR) programs and use of several mechanical devices (e.g., seals, rupture disks). See Versar (1984b) for a summary of efficiencies of fugitive emission control systems in the SOCMI.

Storage releases are breathing losses that are vented from fixed-roof and floating-roof tanks used for storing volatile liquids. Storage tanks are usually located outdoors. The releases from storage may contribute to the overall plant area concentration.

Secondary releases are the emissions that result from the handling, treatment, and disposal of aqueous, liquid, and solid wastes generated by industry (ITE 1980). These may result in occupational exposure to workers around the treatment facility.

Releases from products during trade may occur as a result of package failure during loading, shelving, or sales, or during handling of unpackaged products. Workers engaging in wholesale and retail trade activities may experience inhalation exposure from the chemical releases and dermal exposure from direct contact with a product.

Commercial activities include most workplace situations other than manufacturing and trade; this sector is dominated by the service industries. The individual activities are too diverse for listing. As a group they generally involve passive inhalation exposure, which includes all exposures resulting from use of a product other than the active exposure of the user during use (e.g., exposures of the user and non-users following use activities).

4.1.2 The Mass Balance Approach

If accurate and reproducible workplace or personal breathing zone monitoring data, which quantify the contaminant levels in workplace air or the levels to which workers are exposed, are not available for industrial operations and related activities, then mass loadings of chemical substances to workplace air (and, subsequently, the air concentrations) must be estimated. Development of a mass balance involves prediction of a chemical's mass loadings to environmental media and workplace air from all emission sources in industrial manufacturing and processing operations and related activities so that emissions to the workplace can be quantified and distinguished from emissions to the ambient environment.

A mass balance for assessing chemical releases to workplace air from industrial manufacturing and processing and related activities consists of the steps outlined below. These steps comprise any mass balance approach for predicting chemical loadings to air regardless of the setting (i.e., workplace or ambient). However, an additional data integration component is requried when estimating chemical loadings to workplace air. The basic mass balance development steps involve:

- Identifying all sources of chemical (primarily volatile organic compound (VOC)) emissions to air in the process or activity. Chemical emissions may be vapors or contaminated particulates.

- Grouping emission sources into categories (e.g., stacks, vents, fugitives, storage) according to the nature of contaminant release (e.g., continuous or intermittent, process or activity related).

- Determining emission rates. For process sources, this step involves use of emission factors, which quantify mass loadings to air per unit of production volume, available in the literature for selected source categories in numerous industrial processes; production data for the process; and data on applicability and performance of emission control devices. For intermittent, short-term releases associated with worker activities, this step involves prediction of the release rate during the activity, using expressions based on chemical properties and characteristics of the operation.

- Determining constituent chemical release rates. For process sources, this step involves use of reported composition of emission streams from source categories in industrial processes (which are available in the literature); or estimation of emission stream compositions analyzing the process chemistry and unit operations. For releases associated with worker activities, the algorithms can be adjusted to predict releases of constituent chemicals that are components in a solution.

- Determining total mass loadings of constituent chemicals. This step involves integration of constituent chemical release rates with production data. Short-term, intermittent chemical release rates associated with worker activities must be integrated with data on the frequencies and durations of activities (which depend on production characteristics) to determine total loadings to air over time.

Chemical releases to workplace air during worker activities associated with industrial production are short-term, intermittent releases; just as for process sources, mass loadings of VOC or other chemicals for these worker activities depend on production volume and process characteristics. However, total mass loadings are more difficult to determine for worker activities than for process sources. Although release rates can be predicted for worker activities based on the physical and chemical properties of the chemical substance and the characteristics of the process activity, total mass loadings from these activities can be estimated only after the durations, frequencies, and other parameters associated with the worker activities and the production process are determined. For example, the frequencies, durations, and intensities of releases during maintenance activities at an industrial facility are highly dependent on, among other parameters, the degree of automation of process technology and the throughput of the system. In a modern petrochemical plant with high system throughput in continuous production operations, highly automated process control systems may be used to operate the process. Maintenance activities at this plant may involve breaking into a production line during process operation to repair an automatic control device. The duration and intensity of release associated with this activity may be much greater than a maintenance activity conducted at a small batch producer of specialty chemical products, where maintenance may involve replacing a worn valve during the downtime between process batches. Also, the frequency of maintenance activities at the two plants may vary greatly and may be difficult to predict. Thus, an additional data integration component is involved in the final step of a mass balance for predicting chemical loadings to workplace air from emission sources associated with worker activities.

4.1.3 Estimating Releases

Chemical releases to the occupational setting, whether indoors or outdoors, may be direct or indirect. Direct releases are those introductions of chemical contaminants into workplace air which directly result in exposure to the workers involved in the activities that cause the release. Indirect releases are those that affect workers not engaged in an activity that itself causes the release. Emissions from process vents as well as fugitive and storage emissions generally fall into this category. Note that from an exposure standpoint, a release may be considered both direct and indirect if it affects both classes of workers (i.e., those involved in the release-causing activity as well as those not involved).

Both direct and indirect releases of chemical substances in the workplace also may contribute to contamination of ambient air. If the releases are to an indoor workplace, they may be released to ambient air by building exhaust and ventilation systems; if releases are to outdoor workplaces, the contaminants immediately become a component of the ambient air.

Characterization of contaminant releases is of primary importance in assessing exposure to chemical substances in the occupational setting. Such releases increase the levels of contaminants in workplace air and may lead to exposure of the worker performing the activity or of other workers in the environs of the release. The following discussion centers on algorithms that can be used to predict rates of releases to the workplace. Input data required for estimating release rates using these algorithms include physical and chemical properties of the chemical substance and characteristics of the activity or operation. These data vary on a case-by-case basis; the algorithms should be used with site-specific data inputs. However, screening estimates of release rates can be derived from the algorithms using input data cited in Berman (1982), which presents ranges of values, typical values, and worst-case values of necessary input parameters.

(1) Worker activities. The following are five categories of worker activities associated with industrial manufacturing and processing that may contribute to occupational exposure to chemical substances:

- Drumming of liquids
- Handling of bulk solids (e.g., bagging, weighing)
- Cleaning of process components
- Maintenance of process components
- Sampling and analysis

Each type of worker activity may consist of several different operations that have unique release characteristics. Algorithms are presented for

use in predicting release rates associated with a particular operation. Note that although this list includes the major categories of occupational exposure-related activities, it is not all inclusive. For example, workers sawing particle board containing urea-formaldehyde resins may experience significant exposure. Other such situations are expected to occur. Therefore, as this report can not address each discrete exposure situation in detail, the assessor should consider other potential routes of exposure in addition to those addressed here when conducting an exposure assessment in an occupational setting.

(a) Drumming of liquids. In drumming, liquids are dispensed through hoses draining a large reservoir of material (e.g., a reactor, a holding tank). Manufactures do not usually drum liquid products from industrial manufacturing operations; rather, the manufacturer ships the liquid products by rail car or road tank car to distributors and formulators who eventually drum the material for resale (Berman 1982).

Liquid may be fed into a drum either by splash loading or subsurface loading. During splash loading, turbulence may be substantial because the dispensing nozzle remains above the surface of the dispensed liquid. In subsurface loading, turbulence is minimized by extending the dispensing nozzle to the bottom of the drum to ensure that it remains submerged during the filling procedure. For most applications drums are splash loaded (Berman 1982).

During drumming of liquids, the major route of worker exposure is inhalation of contaminated air resulting from evaporation of bulk liquid. Generation rates of contaminant depend primarily on the vapor pressure and molecular mass of the liquid, the sizes of the drum and its access portal, the number of drums filled per unit time, and the temperature at which transfer is conducted.

An expression for estimating release rates of contaminants from volatilization of bulk liquid during drumming is reported in Berman (1982). The expression can be derived from the ideal gas law and can be tailored to predict release rates of chemical components of a bulk liquid. The expression can be used for calculating release rates if the following are assumed:

1. The system is at constant temperature and pressure.

2. The volume of vapor generated from volatilization of bulk liquid (or components of the liquid) is proportional to the volume of liquid drummed.

3. The gases behave ideally. The ideal gas law applies, and the partial pressure of a gas above the liquid is proportional to the vapor pressure of the substance.

4. Henry's law applies for estimating partial pressures of components of a bulk liquid.

The expression is as follows:

$$G = \frac{(MW)\ (P^{\circ})\ (f)\ (V_{drum})\ (r)}{(3600)\ RT} \qquad (4\text{-}1)$$

where

- G = constant rate of contaminant release from evaporation of bulk liquid during drumming, grams per second
- MW = molecular weight of chemical substance, grams per gram-mole
- P° = vapor pressure of the pure contaminant at temperature T, atmospheres
- f = saturation factor; 1 for splash loading and 0.5 for subsurface loading (Berman 1982)*
- V_{drum} = volume of a drum, cubic centimeters
- r = filling rate in drums per unit time
- R = universal gas constant; 82.05 (cubic centimeters) (atmosphere)/(gram-moles) (degrees Kelvin)
- T = temperature, degrees Kelvin

If the contaminant of interest is only a component of a solution being transferred, the release rate expression must be modified slightly. For components, the vapor pressure of the pure substance, P°, is replaced by P', which is the partial pressure of the component derived as follows:

$$P' = (H)(X) \qquad (4\text{-}2)$$

where

- H = a Henry's law constant
- X = mole fraction of the component

Substituting expression (4-2) into (4-1), the following expression for release rate is obtained:

$$G = \frac{(MW)\ (H)\ (X)\ (f)\ (V_{drum})\ (r)}{(3600)\ RT} \qquad (4\text{-}3)$$

Whether operations use a passive drainage system that relies on gravity feed or on active pumping system, drumming of liquids generally involves little splashing and spilling of material because of the small size of a drum's orifice relative to the access portal on a large process or storage tank. Thus, dermal contact with the liquid is not a probable route of exposure if standard operating procedures are followed (Berman 1982).

*Note that these values should be considered "worst-case" saturation factors for use when activity- and chemical-specific data are unavailable. In practice, the analyst should investigate the availability of such specific data for use in this equation before applying these default values.

(b) Drumming and bagging of solids. Drumming and bagging of bulk solids pose a great potential for inhalation and dermal worker exposure. The major source of contamination from bulk solids handling operations is the generation of dust from the agitation of particulate material during transfer operations. Exposure can result from inhalation of respirable airborne dust. Dermal exposure can result from airborne dust that settles on and adheres to the skin and clothing of workers.

The level of dust released during drumming and bagging of bulk solids depends on characteristics of the operations and properties of the solid.

Bagging and drumming operations for bulk solids may be manual, automated, or any combination of the two. Fully automated systems tend to be enclosed, well-ventilated operations where attendant exposure is minimal. Berman (1982) stated that such systems are economical only if the volume of material handled exceeds 100,000 pounds per year. For smaller solids handling operations, many solids are bagged using semi-automated procedures. A semi-automated operation may consist of a hopper that automatically dispenses a predetermined quantity of material into a bag. The bag is then moved to a sealing station (e.g., a stapling machine). After sealing, the bag is loaded for shipment.

Properties of the solid that are pertinent to the extent of dust formation include particle size, density, shape, and surface characteristics and bulk properties such as size distribution, moisture content, and extent of aeration.

An empirical relation correlating these parameters with the rate of dust generation has not as yet been developed. As the experimental data base expands, empirical methods for estimating dust generation rates will be developed.

Limited monitoring data reporting concentrations of suspended particulates associated with bagging and related solids handling operations are cited in Berman (1982). These data may be used as source strengths in calculating inhalation exposures; however, the fraction of airborne particulates that is respirable must be estimated or assumed. Alternatively, it is useful to note that dust standards developed by the Occupational Safety and Health Administration may be used to estimate likely air concentrations in the absence of actual dust generation data.

(c) Cleaning. Short-term, but potentially significant, contaminant releases may result from cleaning process equipment. Cleaning operations usually require breaking of a production line or dismantling of equipment.

Cleaning involves the removal of residual material from storage tanks, holding tanks, stills, reaction vessels, pipework, and other process equipment. The broad ranges of size, shape, accessibility, and mobility of process equipment require a variety of cleaning procedures. Effective cleaning procedures must address properties of the material to be removed. Current general cleaning practices include washing, solvent rinsing, steam cleaning, and scraping and shoveling; these may be performed individually or in combination.

Process equipment must be purged of mobile material prior to cleaning. Purging and opening of process equipment prior to cleaning can be high exposure activities for industrial workers.

(i) Purging. Contaminant releases associated with purging are primarily a function of the physical state of the material to be purged. Purging of gaseous materials requires sealed equipment so that, except for fugitive emissions, releases likely are minimal. Liquid sludges or residues are frequently drained by a trap into waste drums. Contaminant release rates associated with this activity parallel those associated with drumming of liquids (see expressions (4-1) and (4-3) for the generation rate); however, the vapor released during purging may be saturated because equipment is frequently heated to facilitate purging of otherwise viscous residues. Solid residues that are sufficiently mobile are purged from process equipment in a manner that can be approximated by the conditions associated with bagging and drumming of solids (Berman 1982).

(ii) Opening. Access required for cleaning is provided by breaking of a line or opening of process equipment. If the compartment to be opened is at ambient pressure, then the principal cause of workplace contamination is diffusion of volatilized material from within the compartment. If a positive pressure exists in the process equipment to be opened, then the pressure gradient that exists when the line is opened will accelerate transport of the contaminant into workplace air.

The rate of contaminant release associated with the opening of process equipment varies with time. The initial release rate will be maximum; the release rate will diminish with time (Berman 1982). This is because, unlike the saturated surface adjacent to a liquid, the surface by the opening will not remain saturated. The rate at which saturation at this surface is renewed is limited by the rate that the contaminant inside the enclosure will diffuse from residual material to the vicinity of the opening. Thus, the initial contaminant release rate from an aperture represents an upper limit to the actual release rate.

The initial contaminant release rate from an aperture is primarily a function of the properties of the residual material and the size of the opening or aperture. Just as evaporation is limited by diffusion away

from a saturated interface adjacent to the surface of a liquid, the initial comtaminant release rate from an aperture is limited by the diffusion rate away from a saturated aperture surface. Thus, the initial contaminant release rate from an aperture is obtained from the following relationship (Berman 1982):

$$G = \frac{(MW)\ (K)\ (A)\ (P°)}{(R)\ (T)} \qquad (4\text{-}4)$$

where

G = initial contaminant release rate of contaminant, grams per second
MW = molecular weight of the contaminant, grams per gram-mole
K = gas phase mass transfer coefficient of the contaminant, centimeters per second
A = area of the aperture, square centimeters
P° = vapor pressure of the contaminant, atmospheres
R = universal gas constant, (cubic centimeters) (atmospheres)/(gram-mole) (degrees Kelvin)
T = absolute temperature, degrees Kelvin

The contaminant release rate obtained from expression (4-4) corresponds to evaporation of bulk liquid or solids. If the contaminant of interest is only a component of a liquid or solids solution in the residue, the release rate expression must be modified slightly. For components, the vapor pressure of the pure substance, P°, is replaced by P', which is the partial pressure of the component derived as previously indicated in expression (4-2).

Substituting expression (4-2) into (4-4), the expression for contaminant generation rate becomes the following:

$$G = \frac{(MW)\ (K)\ (A)\ (H)(X)}{(R)\ (T)} \qquad (4\text{-}5)$$

(iii) Water washing. Process equipment may be washed with water to remove water-soluble materials and non-adhering particulates. Detergents are frequently added to increase removal efficiency. The contaminant release rate due to volatilization of residual material decreases as water is added to an opened compartment because the residue enters solution or suspension (Berman 1982). Thus, significant release of contaminant associated with washing is only expected to occur during purging and opening in preparation for washing. (See previous sections 4.1.3(1)c(i and ii)). Also, a worker may experience direct dermal contact with contaminanted equipment, solid residues, or contaminated solutions during water washing of process equipment.

(iv) Solvent rinsing. Materials not readily removed by water washing may be cleaned using solvents other than water. In some cases, the equipment is heated to increase the solubility of residue. Assuming that the solvent does not boil, which is reasonable since solvent vapor would present a much greater hazard than vapor from residual material, the maximum contaminant release rate (which corresponds to the initial release rate) is limited by the rate at which vapors diffuse into the workplace from a saturated aperture surface. Thus, the contaminant release rate expressions (4-4) and (4-5) for opening of process equipment are also applicable to solvent rinsing (Berman 1982).

(v) Steam cleaning. Nonvolatile solids that resist cleaning by washing or rinsing are frequently removed using steam. During steam cleaning, steam is delivered by hose to an isolated section of process equipment. Steam condenses on the walls of the vessel and the resulting water, laden with residual material, is drained via a tap at the bottom of the vessel. Contaminant releases associated with steam cleaning of process equipment are likely to be small if steam cleaning follows other cleaning measures (during which initial significant releases of contaminant occur) and the volatile components in the residue not removed by the steam cleaning are minimal. If these conditions do not apply to the steam cleaning operation, then expressions (4-4) and (4-5) (which were developed for predicting contaminant release rates during opening of process equipment) may be used to determine a reasonable upper limit to contaminant release rates during steam cleaning (since these releases likely will not be greater than the initial contaminant releases that occur when process components are opened).

(vi) Shoveling and scraping. Solid materials that cannot be removed by other cleaning methods must ultimately be removed by manual shoveling and scraping. Depending on the size of process equipment, a worker can manually clean equipment either externally or internally. Usually, small process components are cleaned externally and large process components are cleaned internally.

Contamination of workplace air from vapor generated inside a vessel is limited by diffusion through the access aperture. Thus, a maximum contaminant release rate during external manual cleaning of small process components can be estimated using expressions (4-4) and (4-5), which are release rate expressions for opening of process equipment. However, unlike during the initial opening of a sealed compartment, a worker may experience direct dermal contact with contaminated equipment or residual material during external manual cleaning.

Workers may physically enter large process components such as storage and holding tanks and reactor vessels. Generally, an industrial worker enters a process vessel to manually remove solid residual material still remaining after completion of other cleaning methods (e.g., purging,

water washing, solvent rinsing, steam cleaning). Much contaminant release may occur during the precleaning steps, before the worker enters the vessel; however, air in the vessel may be saturated with vapor or dust from residual material, particularly since ventilation in such enclosures is poor (Berman 1982).

If the facility strictly adheres to a worker safety program, the worker entering the vessel should be wearing a respirator (and other protective equipment, such as special clothing and gloves to minimize dermal contact). In this case, worker inhalation exposure would be reduced or eliminated depending on the efficacy of the protective measures used (see Section 7.2). If the facility does not strictly adhere to a worker safety program, then the worker may enter the vessel without wearing a protective device. Assuming in the worst case that the vessel air is saturated with contaminant, then the maximum air concentration of contaminant can be computed from the ideal gas law with the saturation vapor pressure of the chemical substance as the input pressure; the rate of contaminant release does not need to be estimated.

The ideal gas law is:

$$PV = nRT \qquad (4\text{-}6)$$

where

P = pressure of gas
V = volume of gas
n = moles of gas
R = universal gas constant
T = temperature of gas

The number of moles of gas, n, is equivalent to m/MW, where m is the mass of gas and MW is the molecular weight of the gas. Inputting P°, the saturation vapor pressure of the liquid contaminant at temperature T, for P and m/MW for n in expression (4-6), the following is obtained:

$$\frac{m}{V} = C = \frac{(P°)\ (MW)}{(R)\ \ (T)} \qquad (4\text{-}7)$$

where

m = mass of gas, grams
v = volume of gas, cubic centimeters
C = worst-case (saturation) concentration of contaminant in the interior of process component, grams per cubic-centimeter
P° = saturation vapor pressure of liquid contaminant at temperature T, atmospheres
MW = molecular weight of the contaminant, grams per gram-mole
R = universal gas constant = 82.05 (cm^3-atm)/(gram-mole) (°K)
T = absolute temperature, degrees Kelvin

Dermal contact during internal manual cleaning of a process component may be excessive in the absence of protective clothing and other special measures.

(d) Maintenance. Maintenance involves the mechanical adjustment, alteration, or repair of engineering equipment. The following are examples of maintenance activities: replacing valve seals, repacking stirrer glands, repairing pipework and flanges, servicing motors and pumps, and calibrating monitoring instruments. Maintenance operations can be classified into the following groups:

- Those performed externally to process equipment.
- Those performed via access portals and other openings in process equipment.
- Those requiring workers to enter process enclosures.

Operations in each group possess similar characteristics that are pertinent to contaminant releases. These operations are individually discussed below.

(i) Operations performed externally to process equipment. Maintenance operations that can be performed externally to process equipment and do not require the breaking of any seals present little potential for contaminant release to air. The only releases of contaminant are fugitive emissions, which can be considered relatively insignificant. There is a potential for workers to dermally contact chemical residues remaining on equipment due to poor cleaning practices. Examples of maintenance operations in this category include adjusting instruments, tightening bolts or seals, repairing pump motors, and monitoring.

(ii) Operations performed via access portals and other openings. The majority of maintenance operations are performed via access portals and other openings (e.g., replacing valves or flange seals, repacking stirrer glands, repairing or replacing pipework, changing filters). Access required for these operations is provided by breaking a line or opening process equipment. Thus, contaminant releases associated with such operations are due to diffusion of residual vapors through the access aperture into the workplace.

Expressions (4-4) and (4-5) for contaminant release rates, developed for releases during opening of process components, are also appropriate for estimating release rates for maintenance activities performed via access portals and other openings. They are applicable for release rate estimations during changing of filters. However, rather than an open aperture, filters represent a surface coated with material that

volatilizes causing airborne contamination. As the material volatilizes, the space adjacent to the surface becomes saturated with vapor. The contaminant release rate to workplace air from filter changing is therefore determined by the rate vapors will diffuse from such a saturated layer (Berman 1982). To determine the contaminant release rate associated with changing a filter, expressions (4-4) and (4-5) can be used with the surface area of the filter (rather than an aperture size) being substituted for the parameter "A."

Dermal contact may be significant for workers conducting maintenance activities via access portals and other openings.

(iii) Operations requiring workers to enter process enclosures. Repair of internal components or the interior walls of large process equipment such as tanks and reaction vessels frequently requires maintenance workers to enter such compartments. Although workers in such situations would generally be expected to use protective equipment such as a respirator (see Section 7.1), that may not always occur. The contaminant release rates associated with these maintenance activities are not predicted in this report; rather, it is assumed that the worst-case contaminant concentration (to which the worker may be exposed when not wearing a respirator) inside the equipment is represented by the saturation concentration of the contaminant, just as for internal manual cleaning of process components discussed previously in Section 4.1.3(c)(vi). The saturation concentration of the contaminant in air can be determined using the ideal gas law with the contaminant's saturation vapor pressure as the input pressure. See expression (4-7) for guidance on estimating saturation concentrations. The saturation concentration can easily be attained during maintenance operations conducted inside process equipment because of poor ventilation in the enclosure and a large contaminated surface area in the vessel's interior (Berman 1982).

Dermal contact may be significant for a maintenance worker inside a process vessel.

(e) Sampling and Analysis. Sampling and analysis operations include a diverse set of procedures that present a broad range of potential for worker exposure. Even in small industrial manufacturing operations, most sampling and analysis operations are performed by automatic devices incorporated directly into process lines and equipment. On-line sampling and analysis offer advantages such as continuous monitoring capability, rapid results, and decreased labor costs. Worker exposure associated with automated sampling and analysis results primarily from fugitive emissions (Berman 1982).

Manual sampling and analysis, which may be common in small batch operations and in processes requiring measurement of physical parameters (e.g., specific gravity, viscosity, clarity, or suspended solids content) pose potentially significant contaminant releases. Contaminant releases

associated with manual sampling and analysis depend on the specific procedures used and the physical state (e.g., solid, liquid, gas) of the material being sampled. For example, sampling of gases requires use of equipment that is attached directly to the production line to confine the gas; except for fugitive emissions and a small volume of vapor released when a sampling device is uncoupled, contaminant releases associated with gas sampling should be minimal.

Sampling of liquids and solids may result in contaminant releases to workplace air from volatilization of the material or diffusion of saturated vapor. The former mechanism of contaminant release may predominate if the sampled material lies in an uncovered vessel during sampling (e.g., sampling by dipping a scoop or glass tube into the liquid to obtain a small quantity of liquid). The latter mechanism of contaminant release may predominate if the vessel is sealed and a small access portal is opened for sampling.

Many factors (e.g., the duration of the sampling operation, the size of the sampling access aperture, the volume of the sample, the molecular weight of the chemical substance) determine the relative contributions of direct volatilization and diffusion of saturated vapor to contaminant releases during sampling operations. These factors vary on a case-by-base basis.

The contaminant release rate associated with displacement of saturated vapor during sampling is derived from the ideal gas law and parallels that of drumming of liquids (see expressions (4-1) and (4-3) in this section). The expression is as follows (Berman 1982):

$$G = \frac{(V)\ (P°)\ (MW)}{(r)\ (R)\ (T)} \qquad (4\text{-}8)$$

where

G = contaminant generation rate for displacement of saturated vapor, grams per second
V = volume of the sampling container or dipper, cubic centimeters
P° = vapor pressure of the liquid, atmospheres
MW = molecular weight of the liquid, grams per gram-mole
r = filling time of sampling device, seconds per container
R = universal gas constant, 82.05 cm^3-atm/gmole-°K
T = absolute temperature, °K

The contaminant release rate expression for volatilization of residual material during sampling parallels the expressions developed for estimating releases from volatilization during opening of process equipment. The initial release rate, which is the maximum release rate that can be used as an upper limit, from the sampling access portal may

be limited by the diffusion rate away from the saturated portal "surface." Thus, the initial contaminant release rate for volatilization during sampling operations can be estimated using expressions (4-4) and (4-5) in this section.

Berman (1982) used typical and worst-case values of parameters in the contaminant release rate expressions for sampling operations to assess the relative contributions to releases from volatilization and displacement. Using parameter values typical of sampling operations in expression (4-8), the following expression for release rate due to displacement is obtained:

$$G = (6 \times 10^{-4})\ P^{\circ} \qquad (4\text{-}9)$$

where G and P° are as defined earlier. Using typical parameter values in expression (4-4), the following expression for release rate due to volatilization is obtained:

$$G = (0.14)\ P^{\circ} \qquad (4\text{-}10)$$

where G and P° are as defined earlier. Since (0.14)P° is so much greater than (0.0006)P°, it can be concluded that volatilization predominates (and displacement can be ignored) in typical sampling operations.

Using the reasonable worst-case values for parameters in expressions (4-4) and (4-8), Berman (1982) obtained the following reduced expressions:

$$G = (7 \times 10^{-2})\ P^{\circ} \qquad (4\text{-}11)$$

for the release rate due to displacement and

$$G = (2.1)\ P^{\circ} \qquad (4\text{-}12)$$

for the release rate due to volatilization. Thus, since (2.1)P° is significantly greater than (0.07)P°, it can be concluded that volatilization predominates in these situations as well. Both expressions (4-4) for volatilization and (4-8) for displacement should be used when contaminant release rates during sampling operations are estimated. Though it has been shown that volatilization may be the predominant mechanism of contaminant release during sampling, the relative contributions of the two mechanisms to the overall release rate should be assessed on a case-by-case basis using site-specific data.

A simpler method for obtaining samples is via a tap. In this case, sampled material is drained directly from sealed lines or a sealed vessel into a sample container. The resulting contaminant release is due to volatilization as the material fills the sampling tube. The contaminant release rate associated with tapping can be obtained using the volatilization expressions (4-4) and (4-6) in this section.

(2) Process sources. The following steps can be taken to quantify chemical mass loadings to air from process emission sources (which include stack vents, fugitive sources, storage sources, and secondary sources) in industrial manufacturing and processing operations:

1. Identify all VOC emission source in the process from process diagrams.

2. Group each VOC emission source into appropriate source categories.

3. Obtain uncontrolled VOC emission factors for each process source category. Versar (1983) has an abundance of useful information on industrial sources including emission factors, methods for mass balance calculations, control technologies, process descriptions and technologies, and economic factors. Appendices that accompany Versar (1983) provide a resource list identifying other valuable data sources, general process and industry-wide information, and data bases useful in estimating emissions.

4. Determine controlled VOC emission factors for each process source category. These factors are computed by multiplying the uncontrolled VOC factors by the quantity one minus the efficiency of the control device. Thus, control technologies must be reviewed for applicability and performance. Useful sources in this step include Versar (1983), SAI (1982), McDaniel (1983), USEPA (1980c), USEPA (1980d), and USEPA (1984), and Versar (1984b).

5. Determine compositions of each VOC emission stream in the process source categories. A useful source in this step is USEPA (1980e), which cites compositions of VOC emission streams in selected source categories and industrial processes as determined from monitoring. If composition data are not available in the literature for particular streams of interest, then the process chemistry and unit operations should be analyzed to estimate compositions.

6. Estimate controlled constituent chemical emission factors for each source in the source categories. These values are computed by taking the product of the controlled VOC emission factors and the constituent chemical composition in the stream.

7. Aggregate the controlled constituent chemical emission factors within each source category to obtain total chemical release factors for each source category.

8. For each source category, multiply the controlled constituent chemical emission factors by the production volume associated with the process to obtain total controlled chemical release rates.

Production volumes can be obtained from industry contacts, SRI (1984), and USITC (1984). Overall chemical releases for the process can be determined by summing the release rates over all source categories.

Process release sources continuously emit chemical substances to ambient air. These releases may or may not significantly contribute to contaminant concentrations in workplace air. Releases from vents could contribute to workplace air concentrations through wake effects created by structures in the vicinity of release. Section 5 discusses means of estimating concentrations of contaminants resulting from releases captured by building wakes. Fugitive releases initially are to workplace air and eventually diffuse or are carried to the atmosphere. Storage releases essentially contaminate ambient air since storage tanks are generally located outdoors in relatively isolated areas which are readily accessible by rail or motor carrier. Secondary releases may directly contribute to workplace air contamination in the vicinity of the treatment facilities and operations. The contribution of process releases to workplace air concentrations can only be accurately assessed by monitoring the contaminant levels in the air.

(3) Activities of wholesale and retail trade. The activities of workers in wholesale and retail trade can be grouped in six classes: loading, storage, packaging, shelving, demonstration, and sales. The extent to which any of these activities are pertinent to potential releases of contaminant to workplace air depends on the applications and uses of the finished products.

(i) Loading. Finished products are shipped from the manufacturing site to distributors, often wholesale traders. Loading (as a trade activity) is defined as the removal of a product from a transportation vehicle and the product's placement in a storage facility for subsequent sale. This definition includes the transition between manufacturing and trade as well as between wholesale trade and retail trade. It is a short-term activity with potential for direct releases of contaminant to workplace air and for dermal contact.

Loading may involve the handling of either bulk or packaged material. The degree of containment of a product will largely determine whether loading is a source of contaminant release. Accidents during loading may be another source of contaminant release to the workplace.

(ii) Storage. Loading of a product is usually followed by some period of storage. The storage area may be a separate warehouse facility or a section of a retail store. As in the case of loading, the degree to which storage may be a release source depends on the degree of containment or packaging of a product. Unlike loading, storage may be a long-term activity. Release of chemicals into the area may lead to

accumulation of atmospheric contaminants over the long term, and storage facilities may not be designed with adequate ventilation for pollutant removal. Storage may also refer to the time a product resides in retail inventory (or on the shelf).

(iii) Packaging. Packaging may be done at the manufacturing site; this can involve the packaging of bulk materials for ease of transpor- tation or the packaging that accompanies a product through retail trade. Wholesale traders may take bulk shipments of goods and package them in "trade name" wrappings. It is through this activity that contaminant release may occur in the trade sector.

(iv) Shelving. Shelving involves the transfer of goods from storage to an area accessible to potential buyers. Shelving may be a source of contaminant release through accidental loss of product due to container failure (e.g., breakage of glass jars).

(v) Demonstration. Sale of an item may involve a demonstration of its use. For such a demonstration to be effective, it should closely mimic the consumer's use of the product. See Versar (1984c) for methods of estimating releases during consumer use of products.

(vi) Sales. "Sales" refers to the transfer of goods from the trade sector to the consumer or commercial user. The activities that are a part of selling vary widely with the product, but in all cases the sale is consummated in a short period of time. Sales may be a source of contaminant release through accidental loss of product (as in shelving).

The activities of wholesale and retail trade may be sources of contaminant release to workplace air in two possible ways:

- Accidental loss of product through package failure (loading, shelving, sales).
- Lack of packaging or insufficient containerization of product with resultant atmospheric emissions (loading, storage).

Also, direct contact with a product during packaging, contact resulting from package failure (leakage) during loading or demonstration, and other related activities can result in dermal occupational exposure.

Estimation of contaminant release rates from package failure requires three data inputs:

1. Product formulation
2. Volume of product in each discrete package
3. Package failure rate

Product formulation data can be obtained from Gosselin (1976), the NIOSH NOHS/NOES survey data bases (see Section 3), Bennett 1933-1981, economic data bases, and patent literature.

The volume of a product contained in each package can be determined in two ways. The first, direct observation, is preferred for consumer products; the investigator can simply go to a sales outlet and check product labels. Esoteric products not easily found on retail shelves can be quantified by contacting the producer or specialized merchants. The type of package can be determined in the same manner.

Failure rates of packages are not readily available. The wide variety of packages used (e.g., glass jars and bottles, plastic bags, tubes) have different failure rates. However, packaged materials are finished goods, and the economics dictate minimization of the failure rate.

Contaminant release rates as a result of package failure can be estimated using the following expression:

$$G = Fr \times V \times Fc \times N \qquad (4\text{-}13)$$

or

$$G = Fr \times m \times Fc \times N \qquad (4\text{-}14)$$

where

- G = contaminant release rate due to package failure, grams or cubic centimeters per unit time
- Fr = fraction of chemical in product formulation, fraction of total product mass or volume
- V = volume of product in each container, cubic centimeters product per container
- Fc = failure rate of containers, number of failed containers per unit time
- N = total number of containers
- m = mass of product in each container, grams product per container.

Expression (4-13) gives an aggregate mass loading or volume of contaminant into workplace air from package failures over a period of time. Site-specific data on standard operating protocols and capacities for conducting these activities are needed to assess contaminant releases from certain finished products on a case-by-case basis. Monitoring the air levels in workplaces during wholesale and retail trade activities is the preferred method for obtaining contaminant source strengths for calculating occupational exposures.

(4) Activities and processes of commercial use. The activities of commercial use include most workplace situations outside manufacturing and trade; this sector is dominated by the service industries. Table 4-1 lists the industrial classifications included in this category.

The actual activities within each commercial use industry are so diverse that they cannot be listed. Use data for a chemical and its products must be obtained from producers, distributors, and wholesale or retail dealers of the product to generate a comprehensive list of commercial users.

The methods for estimating releases from the active use of commercial products presented in Versar (1984c) are applicable to most commercial use situations. However, these and other methods for estimating contaminant releases should address the physical and chemical properties of the product; the purpose of, and activities related to, product use; and product use patterns. Methods need to accommodate these and other relevant data and should be validated to ensure proper use and accurate results. In the absence of complete and valid prediction methods, monitoring data gathered during active use of commercial products provide the only viable means of obtaining contaminant concentrations in air for use in calculating occupational inhalation exposures.

Table 4-1. Commercial Use Industries*

Agricultural services
Building construction - general contractors and operative builders
Construction other than building construction - general contractors
Construction - special trade contractors
Hotels, rooming houses, camps, and other lodging places
Personal services
Business services
Automotive repair, services, and garages
Miscellaneous repair services
Motion pictures
Amusement and recreation services, except motion pictures
Health services
Educational services
Miscellaneous services
Justice, public order, and safety

*These designations refer primarily to the consumer industry.

Source: OMB 1972.

5. ENVIRONMENTAL FATE AND EXPOSURE PATHWAYS

The single route of exposure significantly affected by environmental fate processes in the occupational setting is that of exposure to airborne contaminants. While direct exposure to raw materials, process streams, or waste streams may be significant, the contaminant concentrations to which workers are exposed in these situations are determined by process parameters and are usually not modified by environmental fate mechanisms.

Section 4 provides methods for estimating the rate of contaminant release to the air from sources typical to the workplace. These release rates can be used in conjunction with algorithms describing significant air fate processes to obtain estimates of workplace air contaminant concentrations. Section 5.1 discusses fate processes affecting contaminants in the occupational setting. Means of calculating (estimating) workplace concentrations of such contaminants are presented in Sections 5.2 and 5.3. Procedures are presented for contaminant concentration estimation in two workplace settings: indoor and outdoor. In this context, outdoor workplace settings are considered to be those wherein a worker is exposed to contaminants caught by a building's wind wake. An example would be loading dock workers when the loading dock is located below a rooftop vent releasing contaminants to the outside air. For situations where workers are located outside and away from buildings or other structures that can cause a building wake effect but within reasonable proximity to contaminant release sources, the only reliable method of determining the concentration of chemicals to which exposure occurs is by monitoring. Note that this section does not address estimation of contaminant concentrations offsite in the ambient environment. Such procedures are presented in detail in Volume 2 of this report series (Freed et al. 1983).

5.1 Workplace Air Contaminant Fate Processes

For the purposes of this presentation, air fate processes are categorized into two groups below: those physical transport mechanisms that affect the movement of airborne contaminants from the source to the receptor and those physical and chemical mechanisms that remove airborne contaminants from workplace air.

5.1.1 Indoor Transport Processes

Two physical transport mechanisms, convection and diffusion, account for the movement of airborne pollutants in an indoor air space. The former mechanism predominates in rooms with significant air movement, while the latter is significant only in static indoor air environments.

Although both of these mechanisms can significantly affect the concentration of airborne pollutants at different locations within a room, theoretical relationships describing these effects and estimating air pollutant concentration differentials at selected spatial and temporal intervals are not available. Concentrations and exposure are usually estimated through use of room-wide average air concentrations as a function of time. The following discussions of the effects of diffusion and convection are provided for the purpose of permitting a qualitative assessment of concentration profiles within a room.

(1) Diffusion. Diffusion describes the movement of gaseous pollutants from areas of high concentration to areas of low concentration; it progresses at a rate dependent on room air temperature and pressure and on pollutant-specific physical and chemical properties (Treybal 1968). When conservative pollutants (i.e., those that do not readily degrade) are released from a finite source, the ultimate result of diffusion is a homogeneous pollutant concentration throughout the air of a room, where final pollutant concentration is a function of (1) the mass of pollutant released into the room and (2) room volume. When the source of the pollutant is in excess, final room air concentration is a function of (1) partitioning of the pollutant among gaseous and other media or (2) the air saturation concentration of the pollutant.

Prior to the establishment of homogeneous conditions, when pollutant releases are constant, or when dealing with nonconservative pollutants, air pollutant concentrations resulting from diffusion usually decrease with distance from the source.

(2) Convection. Convective currents transport both gaseous and particulate pollutants. Convection within a room results in air mixing, while convective transport associated with air movement into or out of a room results in room ventilation. The effect of these processes on room air concentrations are interrelated, as discussed below.

The effect of mixing, or convective transport within an indoor space due to air circulation or turbulence is to distribute airborne pollutants to those areas within the room which are affected by convective currents. The degree of distribution and concentration of pollutants at selected points is dependent on (1) directional patterns and velocities of air currents with relation to source locations, (2) aerodynamics of the room, and (3) the room's internal obstructions to air flow.

In ventilated rooms, mixing affects the efficiency of ventilation systems in removing airborne pollutants. Maximum ventilation efficiency occurs under theoretically perfect mixing conditions, in which mixing is complete and instantaneous and air pollutant concentrations are always homogeneous throughout the room. Because in practice mixing processes are not instantaneous and affect some areas of a room less than others,

the efficiency of ventilation processes in a given room is reduced by a room-specific mixing factor. This mixing factor is usually determined empirically through tracer gas studies and is a function of room size, activity, and ventilation system configuration (Clement 1981). Typical mixing factors for a 1,000 cubic foot room are presented in Table 5-1. The use of mixing factors in estimating room air pollutant concentrations is described in the following subsection.

5.1.2 Indoor Air Contaminant Removal Mechanisms

Mechanisms that effectively remove airborne contaminants from indoor air fall into three categories: convective transport (i.e., ventilation), gravitational settling, and chemical degradation. Of the three, ventilation is usually the predominating mechanism; ventilation removal rates usually limit the room air residence time of airborne pollutants to under 2.5 hours (Versar 1984d), an interval often too brief for significant chemical decay or settling processes to take place. Ventilation is also the only process of these three which is usually accounted for in the calculation of room air pollutant concentrations. The following discussion briefly describes the manner in which each of these removal processes affects room air contaminant concentrations. Basic expressions illustrating the interrelationship of these processes and contaminant concentrations are also presented.*

(1) Ventilation. The effect of ventilation on room air contaminant concentrations is a function of ventilation rates, room volume, and mixing within the room. Ventilation is usually expressed in units of exchanges per hour, where one exchange represents the infiltration of a volume of external air equal to the volume of the room. Typical exchange rates range from 0.5 per hour to 4 per hour (Versar 1984d), and suggested exchange rates for occupational settings range as high as 20 per hour (Versar 1984d, from ANSI/ASHRAE recommended commercial ventilation rates).

In cases where indoor contaminant releases are instantaneous and external air is free of pollutants, ventilation reduces the concentration of pollutants in room air over time following a pollutant release. Room air pollutant concentration as a function of time can be estimated by the following equation (Versar 1984d, from Porter 1983):

$$C = (P/V)\, e^{-m(Q/V)t} \qquad (5\text{-}1)$$

where C = room air pollutant concentration at time t (g/m^3)
P = mass of pollutant initially released to room air (grams)
V = room volume (m^3)
m = mixing factor
Q = ventilation air infiltration rate (m^3/hr)
t = time from pollutant release event (hours)

*Note that the following expressions for estimating workplace air contaminant concentrations address equilibrium concentrations within the entire room. In reality, however, workers often are exposed to localized concentrations in the immediate vicinity of the release source (i.e., the "effected volume"). Such local concentrations will significantly exceed those estimated for large workplace air volumes in equilibrium. Similarly, for exposure-related activities of short duration (e.g., less than 2 to 3 hours), development of time-weighted concentration values will more accurately reflect the actual exposure situation. When data allow, therefore, calculation of time-weighted, effected volume concentrations may provide the most accurate exposure estimates.

Table 5-1. Mixing Factor (m) Values for 1000 ft^3 Room

Air supply system	Mixing factor
Perforated ceiling	0.5
Trunk system with anemostats (central system controlled by pressure differentials)	0.33
Trunk system with diffusers (central system with forced-air blowers)	0.25
Natural draft with ceiling exhaust fans	0.16
Infiltration and natural draft	0.10

Source: Clement 1981.

In the case of a constant, steady-state pollutant release from an internal source and pure air ventilation from outside of the room, the room air concentration is a function of the ratio of the release rate to the ventilation rate, and of time. This function is represented by the following equation (Versar 1984d, from Porter 1983):

$$C = G/Q - (G/Q)\, e^{-m(Q/V)t} \qquad (5\text{-}2)\ *$$

where G = pollutant release rate (g/hr) and all other nomenclature remains as defined above. The functions described in Equations 5-1 and 5-2 are taken into account in the methods for calculating room air concentrations presented in Section 5.3.

(2) Gravitational settling. The importance of gravitational settling as a removal mechanism depends upon the size range of particulates released to air and the rate of ventilation in the room. Settling occurs at a velocity related to particle size and becomes significant for all particles of 5 μm or larger (Hanna and Hosker 1980). However, because ventilation usually limits indoor air contaminant residence time to less than 2.5 hours, only particles with a relatively high settling velocity are removed by this mechanism at a significant rate in the occupational setting.

Note that gaseous pollutants can also adsorb to airborne particulates, resulting in their removal from the air phase due to gravitational settling. The rate of removal of gaseous contaminants by this mechanism is a function of particle quantity and adsorptive surface area per volume of air; particle settling rates; and contaminant-specific adsorption and desorption coefficients.

Particle settling velocities are a function not only of particle size, but also of particle shape, density, and orientation to the vertical direction of travel. Figure 5-1 presents settling velocities of spherical particles of 5 μm or larger, assuming particle density of 5 gm/cm. Estimates of settling velocity for particles of density other than 5 gm/cm^2 can be made by multiplying the velocity obtained from Figure 5-1 by the ratio: subject particle density ÷ 5 gm/cm. Settling velocities of nonspherical particles can be obtained by dividing the settling velocity of a particle of equivalent radius obtained from Figure 5-1 by the dynamical shape factor presented in Table 5-2. The radius equivalent of a nonspherical particle is obtained from the equation:

$$\text{radius equivalent} = [3 \times (\text{subject particle volume})/4\Pi]^{1/3} \qquad (5\text{-}3)$$

Settling velocities for fibers are presented in Figure 5-2.

In practice, gravitational settling is usually moderated to some extent by turbulent or rising convective currents created by room

---

:e that these equations do not internalize consideration of various processes that may tend to ›ve contaminants from indoor air (i.e., "extinction" factors such as adsorption, absorption, or ıical transformation). As a result, its application will result in considerable overestimation :ontaminant concentrations when such processes are in effect. If data from which extinction ·ficients can be calculated are available for contaminants under evaluation, such coefficients ıld be integrated into equations 5-1 and 5-2 to allow development of more accurate :entration estimates.

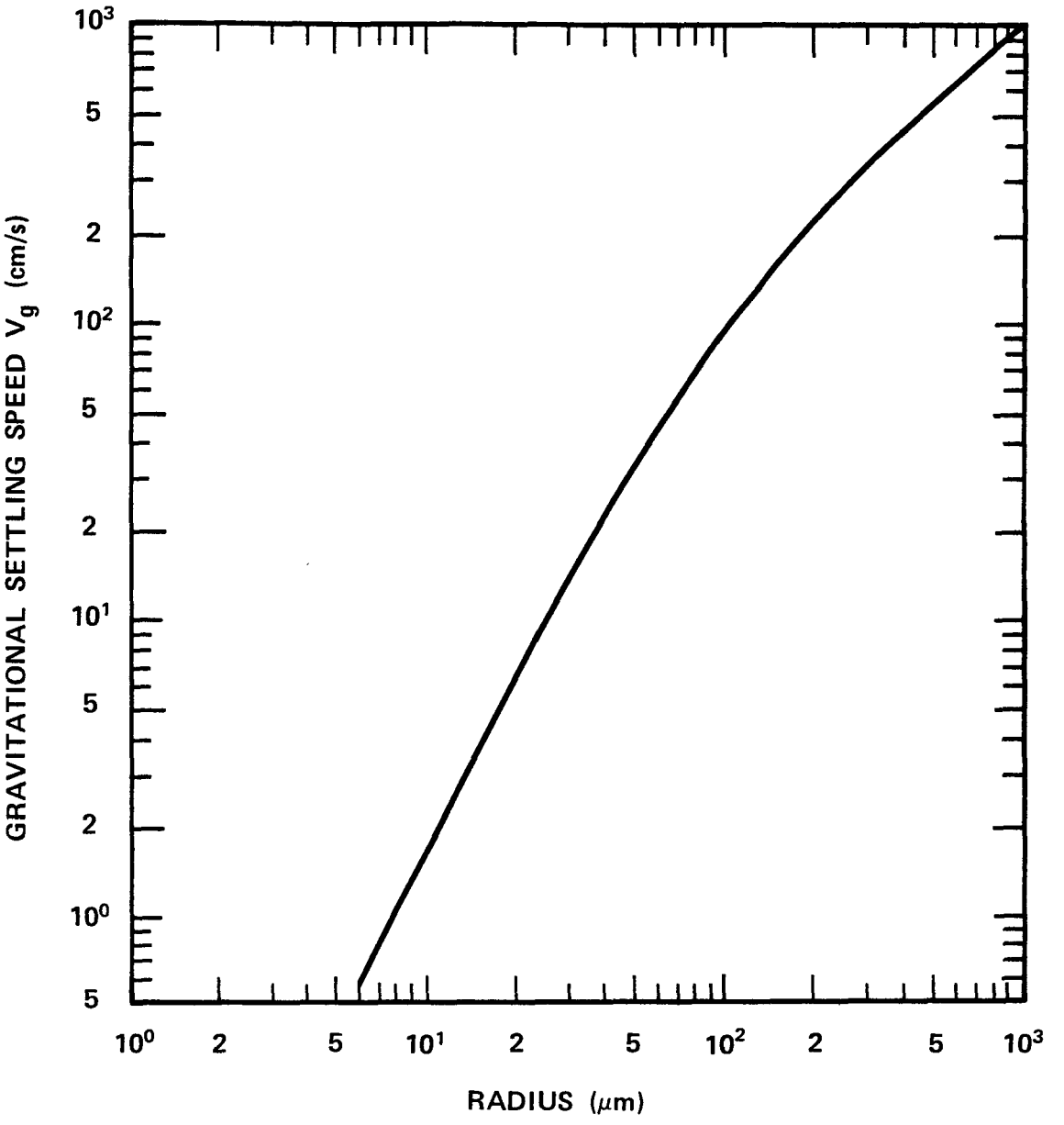

Figure 5.1. Gravitational settling speeds for particles with density 5 gm/cm^3 near the earth's surface (from Engelman 1968, as presented by Hanna and Hosker 1980)

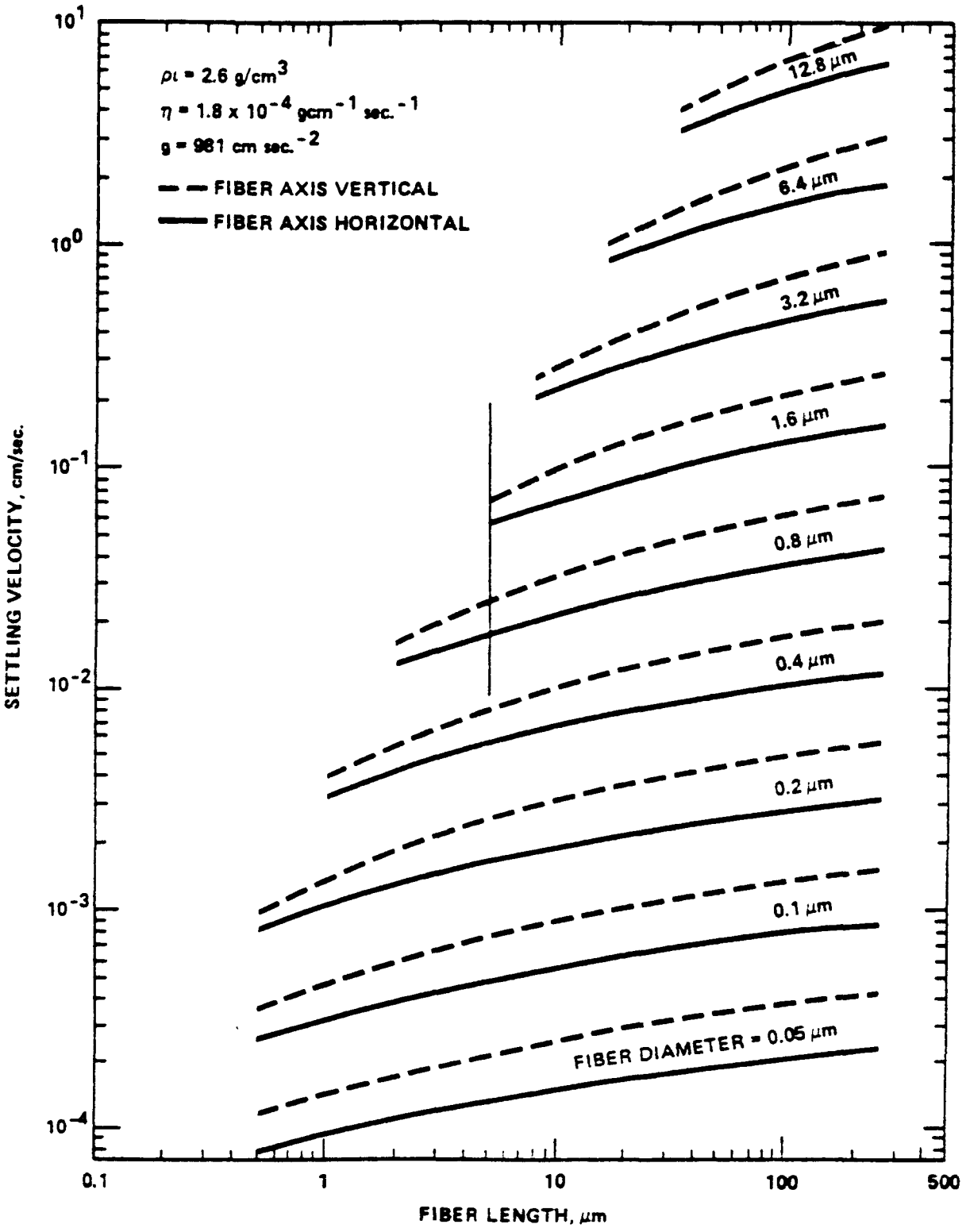

Figure 5-2. Theoretical Settling Velocities of Fibers

Source: Sawyer and Spooner (1978).

Table 5-2. Dynamical Shape Factor α (Ratio of Terminal Velocity of Equivalent Sphere to That of Particle)

Shape[a]	Ratio of axes	α
Ellipsoid	4	1.28
Cylinder	1	1.06
Cylinder	2	1.14
Cylinder	3	1.24
Cylinder	4	1.32
Two spheres touching	2	1.10
Two spheres touching	2	1.17
Three spheres touching, as triangle	-	1.20
Three spheres touching, in line	3	1.34
Three spheres touching, in line	3	1.40
Four spheres touching, in line	4	1.58
Four spheres touching, in line	4	1.56

[a] In all cases, long axis is assumed to be oriented horizontally.

Source: Hanna and Hosker (1980), from Chamberlain (1975).

activity or ventilation. Such convective currents can counteract gravitational settling, and reverse deposition to dry surfaces through resuspension. The effect of resuspension on room air concentration has been widely studied (USEPA 1983). Table 5-3 presents the ratio of room air concentration (gm/m^3) to surface concentration (gm/m^2), due to resuspension from various workplace activities. (Data in this table were compiled by Sehmel (1980) from the various sources indicated.) As the data in this table indicate, resuspension of deposited particulate contaminants must be considered an additional source of airborne pollutants in the occupational settling. Concentrations of particulate pollutants in room air indicated in Table 5-3 apparently represent those resulting from the net particle movement due to the processes of settling and resuspension.

(3) Chemical degradation. Chemical degradation is of importance in the occupational setting only for those contaminants known to be relatively reactive. Again, because the room air residence time interval between pollutant release and removal via ventilation is usually limited, (e.g., usually less than 2.5 hours (Versar 1984d)), only those chemical reactions that occur rapidly can be expected to affect room air concentrations.

The most important reactions of organic compounds in the atmosphere are with the hydroxyl radical and with ozone (Hendry and Kenly 1979). A third process that has been shown to be important in the indoor setting is that of rapid degeneration of reactive pollutants on contact with typical indoor surfaces and materials, (Sutton, Nodolf, and Makino 1976, Meyer 1983, as reviewed by Versar 1984d).

Unfortunately, only limited data are available regarding the rates of these reactions in indoor air. Rates for ozonation and reaction with the hydroxyl radical in the atmosphere are available for many compounds from several sources; their application to the indoor setting is uncertain because of the differences in air flow, temperature, humidity, availability of ozone or OH, and availability of sunlight, between the indoor and outdoor air environments.

Estimated values or methods for estimating contaminant atmospheric half-lives based on chemical reaction rates are presented by Hendry and Kenly (1979), Lyman Reehl and Rosenblatt (1982); and Versar (1980).

5.1.3 Outdoor Airborne Contaminant Fate Processes

Those fate processes that are significant in transporting or removing air contaminants in the indoor occupational setting (as outlined in the foregoing subsections) are also the mechanisms most significant in the outdoor occupational environment. Again, convective removal is usually the predominant mechanism limiting residence time of pollutants in

Table 5-3. Resuspension Factors for Various Room Activities

Activity	Resuspension factor (g/m)	Reference (as cited by Sehmel 1980)
Vigorous sweeping	$1x10^{-2}$ - $3x10^{-2}$	Mitchell and Eustler (1967)
Walking, 36 steps/min	$5x10^{-6}$ - $5x10^{-5}$	Jones and Pond (1967)
Walking	$1x10^{-4}$ - $1x10^{-2}$	Calc. from Brunshill (1967)
Machining	$1x10^{-3}$ - $7x10^{-3}$	Carter (1970)
Fan in operation	$3x10^{-5}$ - $2x10^{-4}$	Stewart (1967)
Walking, 14 steps/min	$1x10^{-6}$ - $1x10^{-5}$	Jones and Pond (1967)
No movement	$2x10^{-8}$	Jones and Pond (1967)

Source: Sehmel (1980).

outdoor workplace air; removal via gravitational settling or chemical degradation can be considered significant only for contaminants with high particle density or those that are highly reactive in the atmosphere. Diffusion is not usually a significant transport mechanism in the outdoor air environment because of the infrequency and short duration of static air conditions. The manner in which convective currents affect air contaminant movement within and removal from the outdoor workplace is described in detail in Section 5.3.

5.2 Estimating Air Concentrations in the Indoor Occupational Setting

Chemical releases to indoor workplace air may contribute to occupational inhalation exposure by increasing gaseous contaminant air levels and by introducing respirable particulates into the air. The contaminant air concentrations resulting from industrial, trade, and consumer use releases must be estimated when personal or workplace monitoring data are not available. This section (see Table 5-4) presents theoretical algorithms from Berman (1982) that can be used to predict contaminant concentrations in indoor occupational settings. These concentration algorithms complement the algorithms presented in Section 4 for estimating release rates associated with industrial worker activities. For all industrial worker activities associated with significant contaminant releases to air (other than those for which saturation levels of contaminants in air are attained), the predicted contaminant concentrations in workplace air associated with the activity are directly proportional to the contaminant release rates estimated to occur during the activity.

The concentration algorithms in Table 5-4 are valid for use only within a simplified estimation framework that has the following features:

1. An indoor occupational setting includes hangars or shelters that are relatively isolated from conditions of the outdoor climate. See Section 5.3 for predicting contaminant concentrations for releases to outdoor occupational settings. See Volume 2 of this series (Freed et al. 1983) for predicting contaminant concentrations for releases to ambient air.

2. Contaminant concentrations are predicted as average room-wide air concentrations rather than concentrations in the immediate vicinity of the release source. Actual contaminant air concentrations near the release source, which the worker performing the activity or residing in the vicinity of release may inhale, can only be quantified from personal monitoring.

3. Of the three mechanisms for removing airborne contaminants from indoor air (ventilation, chemical degradation, and gravitational settling), ventilation is the only process that is accounted for in calculating room air contaminant concentrations (see Section 5.1).

Table 5-4. Occupational Indoor Air Contaminant Concentration Estimation Algorithms

Industrial activity	Expression for estimating contaminant air concentration	Comments
Drumming of liquids	$C = \frac{(1.8 \times 10^5)(T)(\Sigma G)}{(MW)(m)(Q)}$	Estimate G for each release source using expression (4-1) or (4-3).
Bagging and drumming of solids	------	Expression has not been developed due to lack of empirical data. Limited monitoring data for airborne particulate concentrations associated with solids handling were obtained from Berman (1982).
Cleaning of process equipment	Purging $C = \frac{(1.8 \times 10^5)(T)(\Sigma G)}{(MW)(m)(Q)}$	Estimate G for each release source using expression (4-1) or (4-3) with f=1. The vapor generated during purging is assumed to be saturated because equipment frequently is heated to facilitate purging of otherwise viscous residues.
	Opening $C = \frac{(1.7 \times 10^5)(T)(\Sigma G)}{(MW)(m)(Q)}$	Estimate G for each release source using expression (4-4) or (4-5). Use m = 0.1 in concentration expression to account for the nonsteady state nature of the contaminant release associated with opening process components. Using a diminished mixing coefficient simulates a nonsteady state system in which poor mixing of ventilation air with airborne contaminants results in contaminant air concentrations higher than those in a steady state, well-mixed system.
	Water washing -------	Significant contaminant release does not occur during water washing of process equipment. Residual contaminant material enters solution or suspension as water is added to the open compartment. Contaminant releases occur during purging and opening of process equipment prior to washing.

Industrial activity	Expression for estimating contaminant air concentration	Comments
	Solvent rinsing $C = \frac{(1.7 \times 10^5)(T)(\Sigma G)}{(MW)(m)(Q)}$	Estimate G for each release source using expression (4-4) or (4-5). Use m = 0.1 in the concentration expression to account for the nonsteady state nature of the contaminant release associated with solvent rinsing of process equipment (see comments for opening of process equipment). Assumes that the solvent does not boil during the rinsing operation (in some cases, the equipment is heated to increase the solubility of residue). This assumption is reasonable since vapors generated from a boiling solvent would pose a potentially greater hazard than that associated with vapor from residual material. The concentration estimated using this expression is a reasonable upper limit concentration resulting from releases associated with this operation.
	Steam cleaning $C = \frac{(1.7 \times 10^5)(T)(\Sigma G)}{(MW)(m)(Q)}$	Estimate G for each release source using expression (4-4) or (4-5). The concentration estimated using this expression is a reasonable upper limit concentration resulting from releases associated with this operation. However, concentrations likely will be smaller if it is assumed that steam cleaning follows other cleaning measures (during which initial significant releases of contaminant occur) and that volatile components in the residue not removed by the steam cleaning are minimal.
	Shoveling and scraping:	
	External cleaning $C = \frac{(1.7 \times 10^5)(T)(\Sigma G)}{(MW)(m)(Q)}$	Estimate G for each release source using expression (4-4) or (4-5). The concentration estimated using this expression is a reasonable upper limit concentration resulting from releases associated with this operation. Use m = 0.1 in the concentration expression to account for the nonsteady state nature of the contaminant release associated with external cleaning of process components (see comments for opening of process equipment.)

Table 5-4. (continued)

Industrial activity	Expression for estimating contaminant air concentration	Comments
	Shoveling and scraping: Internal cleaning $C = \frac{(P^{o})(MW)(f)}{(R)(T)}$	A release rate does not need to be estimated here because it is assumed that the saturation concentration is a reasonable upper limit. The saturation concentration corresponds to the concentration when the partial pressure of the gas above the liquid is the pure vapor pressure of the substance; thus, f = 1 in this expression. The saturation concentration is a reasonable upper limit if it is assumed that ventilation is poor.
Maintenance	External ------- -	Contaminant releases associated with external maintenance of process components are not likely to be significant if it is assumed that seals are not broken during the maintenance operation. Releases from fugitive sources may occur during these activities.
	Via access and other openings $C = \frac{(1.7 \times 10^{5})(T)(\Sigma G)}{(MW)(m)(Q)}$	Estimate G for each release source using expression (4-4) or (4-5). The concentration estimated using this expression is a reasonable upper limit concentration resulting from releases associated with this operation. This equation assumes that maintenance via access portals or other openings requires breaking of lines or opening of process equipment, and it also applies to changing filters. However, when estimating G, substitute the surface area of the filter for the surface area of the aperture for parameter "A."
	Entering process enclosures $C = \frac{(P^{o})(MW)(f)}{(R)(T)}$	This is an estimation of the reasonable upper limit (saturation) concentration. See comments for "Internal shoveling and scraping" under "Cleaning of process equipment"; here also, f = 1. Because of a large contaminated surface area in the vessel (i.e., the surface area of interior walls of the vessel) and poor ventilation in the vessel, it was

Industrial activity	Expression for estimating contaminant air concentration	Comments
Sampling and analysis	$C = \frac{(1.7 \times 10^5)(T)(\Sigma G)}{(MW)(m)(Q)}$	Estimate G for each release source using expression (4-4) or (4-5) if contaminant releases are controlled by volatilization, or expression (4-8) if contaminant releases are controlled by displacement of saturated vapor. The relative contributions to contaminant release from volatilization and displacement must be assessed using expressions (4-4) (or (4-5)) and (4-8) with site-specific values of input parameters (see Section 4.1.1(1)6). Use m = 0.1 in concentration expression to account for the nonsteady state nature of contaminant release from sampling and analysis.

Source: Berman (1982).

Legend for Table 5-4

C — Average steady state concentration of contaminant in workplace air, parts per million (ppm).

G — Constant steady state release rate of contaminant to air, grams per second (g/sec).

$\sum G$ — Summation of contaminant release rate G over all sources of a specific type (e.g., drumming operations) present in the workplace, grams per second (g/sec).

Q — Ventilation rate in the workplace, cubic feet per minute (ft^3/min).

m — A mixing factor that quantifies the effectiveness of ventilation air in removing airborne contaminants from the workplace, dimensionless.

MW — Molecular mass of contaminant, grams per gram-mole (g/gmole).

P° — Vapor pressure of the pure contaminant, atmospheres (atm).

T — Absolute temperature, degrees Kelvin (K).

R — Universal gas constant, 82.05 $\frac{\text{(cubic centimeters)(atmospheres)}}{\text{(gram-mole) (degrees Kelvin)}}$

f* — A saturation factor that quantifies the extent to which the saturation concentration of the contaminant in workplace air is attained, dimensionless.

---

* Berman (1982) presented the saturation factor f to quantify the extent to which saturation is attained for contaminant releases to workplace air during drumming of liquids; however, it can be used to quantify the degree of saturation attained for contaminant releases to air from any source or during any activity. If f is equal to 1, then the partial pressure of airborne contaminant vapor is equivalent to the vapor pressure of the pure contaminant liquid at the temperature of the operation or activity; the workplace air is then saturated with contaminant vapor.

4. Predicted contaminant concentrations in room air are steady state concentrations. The steady state concentration of a contaminant in indoor air is that concentration at which the rates of contaminant removal by ventilation and contaminant release by the source equilibrate and remain constant. The contaminant concentration is directly proportional to release rate and inversely proportional to ventilation rate; when the rates of contaminant generation and removal equilibrate, then the contaminant air concentration remains constant at an average steady state value.

   Nonsteady state conditions are those in which the rate of contaminant generation or removal varies with time (e.g., a brief, intermittent contaminant release that introduces a finite mass of contaminant into the air). Theoretical expressions for predicting concentrations at selected spatial and temporal intervals have not been developed. For nonsteady state cases, the steady state models were modified by Berman (1982) to incorporate a diminished mixing factor m (which measures the effectiveness of ventilation air in removing airborne contamination). The m factor is assumed to be its minimum value of 0.1, which corresponds to poor mixing and thus higher contaminant air concentrations than those estimated for steady state conditions.

   For situations in which a worker performs an activity inside of a process enclosure, the source of contaminant release is assumed to be in excess, and saturation concentration is assumed to be attained.

5. To compute predicted values of contaminant air concentrations, values of input parameters should be determined on a case-by-case basis using site-specific data. Required input data include physical and chemical properties of the contaminant; characteristics of the process equipment, operation, and activity; and characteristics of ventilation in the area where the operation or activity is performed, Berman (1982) presents ranges, typical, and worst-case values of input parameters which can be used to determine screening values of contaminant release rates and resulting air concentrations.

6. Accurate estimates of air concentrations must account for the relationship between the time when the release occurs and the worker's exposure period. For example, if it is assumed that a worker conducts an activity in which a contaminant is released at a constant rate into workplace air for a fixed duration, then the average contaminant concentration that may be inhaled by the worker can be determined only if the duration that the worker remains in the release area is known. This average concentration

does not necessarily correspond with the steady state contaminant concentration. The average contaminant concentration that a worker may inhale will be greater if the worker remains in the release area for only one hour following release as opposed to eight hours following release, since ventilation dilution effects become more predominant in the latter case. Time-weighted average (TWA) concentrations may have to be computed to obtain accurate estimates. Just as when estimating contaminant release rates, the user should follow an additional step before estimating the source strength to which a person in an occupational setting is exposed. This step involves integrating predicted contaminant air concentrations with site-specific data on the nature of release and worker procedures.

5.3 Estimating Air Concentrations in the Outdoor Occupational Setting

Dispersion modeling is commonly used to estimate concentrations of air pollutants in the ambient air. Typically a Gaussian model is used to represent transport and dispersion of emissions as a function of release specifications (e.g., stack height, exhaust temperature, stack diameter, or flow rate) and meteorological conditions such as wind speed, wind direction, atmospheric stability and mixing height. Most Gaussian modeling is applied to receptors in the range of 200 m to 50 km.

Modeling is generally used to estimate concentrations off the property boundary of a source; for those applications, exposures to the general public are evaluated. However, workers at the source can be exposed to concentrations substantially higher than those offsite. As mentioned above, Gaussian modeling is not generally considered to be appropriate within 200 m of a source because of the statistical assumptions inherent in this approach regarding the distribution of concentration within a plume.

Occupational exposures are usually best characterized by monitoring, because of the uncertainty in predicting concentrations in the short range. Whenever workers may be exposed to high risk associated with air pollutants, it is recommended that a monitoring plan be developed to characterize these exposures. However, for any given situation, it may be difficult to know whether monitoring is needed. Whether personal sampling or workplace monitoring is performed, the cost of these programs can be high. The following approach provides conservative screening-level estimates of long-term occupational exposures to on-site (outdoor) workplace air pollutants.

There are numerous reasons why it is not possible to accurately estimate concentrations in the short range (defined for the purpose of this task to be 0 to 200 m from a source). Highly variable

concentrations can be encountered from complex flows around obstructions, and plume dimensions are relatively small in relation to turbulent eddies that disperse the pollutants. The problem is much too complicated to expect predictions that are within a factor of 2 to 3, as would typically be the case for long-term averages further downwind of a source, e.g., 500 to 2000 m. This approach yields conservative assumptions (i.e., overestimates of expected impacts) because of these uncertainties. In this manner, one should be able to estimate long-term concentrations with reasonable confidence that the values will not exceed actual long-term average concentrations. If these estimates suggest unacceptable risk, personal monitoring would be the logical follow-up option to complete the analysis.

There are basically three types of releases that could be expected in occupational settings: stack releases, vent releases, and groundlevel releases associated with waste piles, disposal, etc. Estimates are provided for releases from the last two categories, i.e. vent and ground level releases. Stack releases are not considered because maximum impacts from elevated releases generally occur off the property boundary and are thus best considered as an ambient exposure problem. These emissions should be evaluated by standard modeling practices. For stack releases, we are referring to release points that are not expected to be entrained in building wakes for any routine meteorological conditions. For example, stack heights of 2 1/2 times the height of nearby obstructions would typically be considered elevated releases under all conditions. If there is any question regarding elevated release versus entrained release, it is recommended that the vent release equation (see Section 5.3.2) be used to characterize ambient exposures at the workplace.

5.3.1 Ground Level Releases

It is difficult to characterize the horizontal and vertical growth of a plume within the first 200 m from a source. However, the most feasible approach is to make conservative, simplifying assumptions, and for screening estimates, the following is assumed:

1. Annual average estimates are made.

2. An average wind speed of 2 m/sec is assumed to conservatively represent annual average wind speed.

3. It is assumed that wind direction flow is uniform around the compass. However, in order to develop conservative estimation, frequency of flow towards the affected receptor is assumed to be 20 percent.

4. It is assumed that all releases can be represented by a sector average approach, i.e., the horizontal distribution of concentration along each arc is uniform within each sector.

5. The vertical dimension of the plume is conservatively bounded at 2 m for all receptors from 0 to 200 m. In addition, it is assumed that uniform concentrations exist along the vertical plane for each downwind distance evaluated.

6. Concentrations displayed below are normalized to a release of 1 gm/sec, i.e., indicated values, when multiplied by actual emission rates in gm/sec, will yield estimates of actual ambient concentrations.

7. It is assumed that all emissions occur from one point. The equation for this model is as follows:

$$C = \frac{(1.0 \times 10^6 \text{ ug/gm})\ (0.20)}{(\sin 22.5°)\ (R)\ (H)\ (u)} \qquad (5\text{-}4)$$

where

C = concentration (ug/m^3) normalized to an emission rate of 1 gm/sec
H = height into which plume is uniformly mixed (m)
R = downwind distance from source (m)
u = annual average wind speed (m/sec) = 2 m/sec.

Estimated normalized concentrations are as follows:

Downwind Distance From Source (m)	Predicted Annual Average Concentration Normalized to Release of 1 gm/sec (ug/m^3)
10	13,066
20	6,532
30	4,355
40	3,266
50	2,614
60	2,178
70	1,866
80	1,634
90	1,451
100	1,306

As stated above, these estimated normalized annual average concentrations with distance from the release source can be multiplied by the actual emission rate to estimate the outdoor workplace air concentrations resulting from the release. These estimates are considered conservative mainly because of the assumption that the vertical extent of the plume is limited to 2 m. It is implied in this

assumption that once the plume reaches the breathing level (i.e., 2 m), further growth is zero. It is necessary to be this conservative because of the great uncertainty in accurately characterizing this term. The annual average wind speed of 2 m/sec and a frequency factor of 20 percent flow towards affected receptors are also considered to be conservative assumptions.

5.3.2 Vent Releases

For releases from rooftop vents or low-level stacks located adjacent to or on buildings, building downwash of the pollutants is an important factor for two main reasons. First, effluents are rapidly brought to ground level rather than being directly transported offsite; this can produce localized maximum concentrations. Second, the vigorous turbulent mixing in the lee of the building can produce substantial initial dispersion to reduce concentrations.

The cavity zone in the lee of an obstruction can extend 2 to 3 building heights downwind (Hanna, Briggs, and Hosker 1982). The turbulent wake of a building, on the other hand, can be distinguished 5 to 20 building heights downwind (Slade 1968). Therefore, there are three zones to evaluate when considering impacts, i.e., cavity zone, wake zone, and the zone outside the wake zone for which routine modeling procedures are generally applied. For the purposes of occupational exposure screening, only estimates for the cavity zone will be made. This limitation is made to simplify the analysis, and because maximum impacts would be expected in this zone.

Although gradients in concentration have been observed adjacent to release points in a cavity zone (Slade 1968), for all practical purposes, it is reasonable to assume that effluents are rapidly and thorougly mixed within the cavity zone. If this assumption is made, the following equation can be used to estimate concentrations within the cavity zone (derived from Hanna 1982):

$$C = \frac{K_c \, (1.0 \times 10^6) \, (freq)}{A \, \bar{u}} \qquad (5\text{-}5)$$

where

C = concentration (ug/m^3) normalized to a release rate of 1 gm/sec
K_c = dimensionless concentration coefficient
$\underline{A}$ = cross-sectional area of the building (m^2)
$\bar{u}$ = average wind speed at rooftop (m/sec)
freq = frequency of flow towards affected receptor.

For conservative estimates, it was assumed that $\bar{u}$ = 3 m/sec and the frequency of flow toward the quadrant being evaluated is 75 percent (i.e., 0.75). The coefficient K_c has been reported to range from 0.2 to 2.0. The conservative extreme of 2.0 was used for these calculations. The following estimates were made based on this model:

Building Area (m^2)	Predicted Concentration Normalized to Release of 1 gram/sec (ug/m^3)
100	5000
300	1667
500	1000
750	667
1000	500
1500	333
3000	167
5000	100

The above estimates are assumed to apply within the cavity zone and to apply out to a distance of 2 x A. It is stressed that the estimates provided in this section are rough, screening-level estimates. Actual annual average concentrations would be expected to be lower for most sites. However, depending on site specifics, it is possible that actual concentrations could be higher than these predictions. Some typical onsite factors that can affect the initial dilution of the plumes released from the ground level sources are:

- Physical dimensions of the area or line source.
- Surface roughness and mixing due to the wind flow being obstructed by storage piles, resulting in greater dilution of the plume.
- Thermal convection due to heat releases or losses from the facility, also aiding in the diffusion.
- The alignment of the sources in relationship to the wind, such that the total concentration is enhanced.

Therefore, judgment should be used when the results are interpreted on a case-by-case basis.

6. EXPOSED POPULATIONS ANALYSIS

Studies of populations exposed in the occupational environment comprise the following elements:

- Identification of exposed populations
- Enumeration of detailed subpopulations
- Characterizing populations with respect to physiologic-dependant parameters
- Determining the frequency and duration of a population's exposure

Exposed population identification involves the categorical determination of worker populations potentially exposed in a given workplace situation. Once broadly defined in the population identification step, individuals in discrete exposed subpopulations are quantified (counted) in the population enumeration analysis. In practice, population identification and enumeration, both of which are addressed in Section 6.1, are often carried out concurrently, with the same data sources providing requisite input for both analyses. Characterization of exposed populations, briefly discussed in Section 6.2, follows the identification and enumeration steps. It involves the evaluation of worker age and sex factors which influence various physiologic-related parameters, such as inhalation rate and skin surface area, and which are necessary to calculate the degree of exposure experienced per exposure event. Exposed populations analysis concludes with determination of factors that define the duration of exposure events and event frequency. This is discussed in Section 6.3.

6.1 Identification and Enumeration of Exposed Populations

Identification of exposed populations requires a knowledge of the spatial and temporal concentration gradients in the workplace and the activity patterns of the potentially exposed workers. The purpose of population identification should be borne in mind at this point in the occupational exposure assessment. Those workers identified as exposed populations will subsequently be enumerated. The form of worker population data should thus be considered during this step; 4-digit SIC designations and specific occupations (job titles) are the most common form by which workers are enumerated. Estimates of occupationally exposed populations may also be based on site-specific and process-specific employment data.

In occupational exposure assessments, two types of population identification and enumeration data will be required: generic data and specific data. Generic data include data which identify and/or enumerate potentially exposed populations by SIC code or by occupation and industry. Specific data identify workers who are involved in exposure-related activities. The determination of worker activities

conducted at facilities being evaluated (see Section 4) often provides the most critical input to the identification and enumeration of exposed populations. When accessible, worker activity data can supply detailed information on categories of workers conducting specific activities in the workplace that will cause exposure, as well as on the number of individuals conducting such activities at individual facilities or facility types. The following sections address each of these population identification/enumeration approaches.

6.1.1 Generic Identification and Enumeration Data

(1) Populations identified and enumerated by SIC code. The industries producing, processing, and using a chemical substance are often identified by 4-digit SIC designations. Many of the data sources discussed in Section 2 of this report are based on the SIC reporting system. However, identification and enumeration by SIC code provide only a broad-scale determination of potentially exposed populations because, in reality, only a portion of the total employment may be affected.

Populations exposed in the workplace can also be identified through monitoring data. The OSHA surveys and NIOSH/NOHS data discussed in Section 3 are based on 4-digit SIC codes. Monitoring data provide direct identification of exposed populations. OSHA monitoring data also identify exposed workers by specific job title, often enabling a more precise enumeration of the affected group.

(2) Populations identified and enumerated by occupation and industry. A method of worker identification and enumeration that provides greater resolution than the SIC code approach is the use of detailed occupation and industry information (job titles). This method entails systematically following a chemical substance through commerce, from production to retail sale, and listing the industries and occupations coming into contact with the substance. The Industry-Occupati (I-O) matrix directory in Dixon et al. (1983) can be used as a guide in this procedure. In addition, information published by the Bureau of Labor Statistics (BLS 1981) and the Bureau of Census (1984) also provides data highly useful in identifying and enumerating exposed worker populations. Also, monitoring data may list exposed populations by job title.

6.1.2 Specific Identification and Enumeration Data

The best data for identification and enumeration of exposed occupational populations specify populations by particular activities conducted in the workplace. Such data constitute critical input to the successful development of an occupational exposure assessment, because

only by determining the relationship between workplace activities and workplace contaminants can the degree of exposure be quantified with any confidence. Unfortunately, such data are limited, and there exists no single comprehensive data base detailing exposure related worker activities. Two general sources of these data do exist, however. As described in Section 4, worker activities that lead to exposure can be considered to fall into the following generalized categories:

- Handling of bulk liquids and solids
- Cleaning and maintenance
- Sampling and analysis

Based on process mass balance analysis, the expected occurrence of these worker activities can be estimated for specific processes and varying process throughputs. Often the mass balance analysis, therefore, can supply requisite data for the identification and enumeration of exposed worker categories to support an activity-specific exposure analysis.

Examination of a random sample of Premanufacturing Notices (PMNs) conducted in 1982 also identified reported worker activity categories that can result in exposure. The full list of such activities identified during the PMN review effort included:

- Sampling for quality control
- Cleanup of components
- Waste disposal
- Sampling and analysis
- Materials transfer
- Manufacture, processing, and use (general)

As review of this list reveals, PMN data indicate that practically all categories of worker activities could potentially lead to exposure. This realization underlines the fact that a process mass balance approach to occupational exposure assessment will often be required to discern the types of exposure related worker activities that pertain to the particular industries and processes under evaluation.

6.2 Population Characterization

Population characterization involves determining the age and sex distribution of the exposed worker population(s). Age and sex influence the average ventilation rate, the rate of food and water intake, and the body area subject to dermal exposure, any of which can affect the level of exposure actually experienced. In addition, population characterization includes determining those groups within the exposed population which, because of the specific health effects of some pollutants, would experience a higher risk than the average population as a result of a given level of exposure. Indeed, the health effects of the

contaminants under evaluation will often dictate the need for population characterization. For occupational exposure assessments, women of childbearing age will often constitute the high risk group of concern. While most studies will consider only the exposed population as a whole and not disaggregate discrete high risk subpopulations, in certain cases such detailed population analysis may be warranted. For example, if a chemical substance is determined to be teratogenic, enumeration of women of childbearing age would be required.

6.3 Frequency and Duration of Occupational Exposure

The frequency and duration of exposure to a chemical substance are important components of the final calculation of exposure. Frequency and duration are separate elements, but are so closely related they will be treated together in the following discussion.

The frequency of exposure refers to how often an activity leading to exposure occurs. The duration of occupational exposure can be defined in two ways: (1) the discrete period of time during which an incidence of exposure occurs, and (2) the length of time the exposure-related job is held by an individual. The frequency and duration of occupational exposure is related to the nature of the process, activity, or occupation in which the worker is engaged; individual work patterns, not easily generalized, may also affect these parameters. Section 6.3.1 contains the available data on frequency and duration of occupational exposure. Section 6.3.2 deals with the concept of "worklife," the number of years a person is employed.

6.3.1 Frequency and Duration

Ideally, the frequency and duration of exposure in industry should be related to activity or process data. The nature of a process (i.e., whether batch or continuous) and the intermittency of activities, (e.g., materials transfer and sampling), are important determinants of exposure frequency and duration (see Section 4). Such factors should be taken into account when monitoring strategies are devised, so that requisite data will be obtained for use in developing an exposure assessment or in refining a previously developed assessment.

In cases where worker exposure is continuous, the use of general frequency and duration data is indicated. The frequency is therefore constant at once per day or week, and the duration is the number of hours worked per day or week. Table 6-1 lists the average number of hours worked weekly by production employees in the various manufacturing industries in 1979. These data can be used in lieu of assuming a standard 40-hour workweek.

The data presented in Table 6-1 can be further refined by two additional data elements:

Table 6-1. Average Weekly Hours of Production Workers on Manufacturing Payrolls in 1979

Title	SIC	Hours worked
Durable goods	-	40.8
Lumber and wood products	24	39.5
Furniture and fixtures	25	38.6
Stone, clay, and glass	32	41.5
Primary metal products	33	41.4
Fabricated metal products	34	40.8
Machinery, except electrical	35	41.8
Electric and electronic equipment	36	40.3
Transportation equipment	37	41.2
Instruments and related products	38	40.8
Miscellaneous manufacturing industries	39	38.9
Non-durable goods	-	39.3
Food and kindred products	20	39.9
Tobacco manufacture	21	38.0
Textile mill products	22	40.3
Apparel and other textile products	23	35.2
Paper and allied products	26	42.6
Printing and publishing	27	37.5
Chemicals and allied products	28	41.8
Petroleum and coal products	29	43.8
Rubber and miscellaneous plastic products	30	40.5
Leather and leather products	31	36.5

Source: BLS 1980.

- A certain amount of paid time on the job may be spent in breaks for meals or other nonwork activities. Labor laws can be consulted to determine mandated scheduling and duration of breaks, etc. This time can be subtracted from the durations presented in Table 6-1.

- Few persons actually work 5 days a week, 52 weeks per year. The number of operating days for a plant is a better indicator of days worked per year. Vacation and lost work days (due to illness or injury) can also be estimated. A total absenteeism rate of 3.5 hours per hundred hours worked (BLS 1980) can be used as a correction factor.

The preceding discussion is geared toward frequency and duration of production workers' exposure. Data obtained as described in Sections 2 and 3 should indicate whether nonproduction workers are continuously exposed, in which case Table 6-2 provides the best available duration data. Intermittent exposure of workers (such as those walking through the plant area) should be approximated. No generic data are currently available to aid in this estimation; should those populations be identified as possibly receiving significant exposure, a duration value such as one hour per day might be used as a plausible worst-case estimate. Table 6-2 lists available data on hours worked in nonmanufacturing industry such as wholesale trade and commercial use.

A factor to be considered in estimating the frequency and duration of exposure is the seasonal nature of some activities, although such seasonality may vary or be unimportant depending on the geographic focus of the exposure assessment. If the substance under assessment is, for example, a component of a garden fertilizer, retailers may only deal with it for six months of the year. The duration of a retailer's exposure to the garden fertilzer component would therefore be 30.7 hours per week for 24 weeks per year. Other seasonal activities include some agricultural services, construction, and amusement and recreation services.

Exposure frequency and duration data obtained from the previously mentioned random sample of PMNs (see Section 6.1.2) are presented in Table 6-3. It is not possible to correlate either production volume or chemical use with exposure frequency or duration, but some generalizations about activities can be made:

- Sampling activities can be assumed to last approximately 5 minutes per sample. Thus, from the PMN data presented in Table 6-3, it can be inferred that roughly 24 sampling events occur in a normal workday.

- Material transfers can be assumed to last approximately three to five minutes each. The total number of events per workday depends on the industry, as reflected in Table 6-3.

Table 6-2. Average Weekly Hours of Workers in Nonmanufacturing Industry in 1979

Occupation	Hours worked
Retail sales persons	30.7
Wholesale sales persons	38.8
Mining (production workers)	43.0
Construction workers	36.9
Transportation and public utilities	39.9
Finance, insurance, and real estate	36.3
Service workers (unspecified)	32.7

Source: BLS 1980.

Table 6-3. Frequency and Duration of Occupational Exposure for Specific Activities, Derived from a Random Sample of PMNs

Activity	Product	Production volume (kkg/yr)	Exposure duration and frequency	
			(hr/day)	(day/yr)
Sampling	Anti-rust additive	350,000	2	13-18
	Emulsifier	115,000	2	14-22
Cleaning	Anti-rust additive	350,000	1	13-18
	Pigment	12,250	2	5
		12,250	2	5
		12,000	2	8
	Emulsifier	115,000	1	14-22
	Miscellaneous	2,000	2	2
Transfer	Coating	150,000	1	150
		90,000	1	30
		4,540,000	1	150
		80,000	2	4
	Lube oil additives	430,000	8	250
		900,000	1	35
	Pigment	8,600	2	28
	Photographic component	50	0.5	1
		30	0.5-2.5	50-150
		11,000	2	150
	Emulsifier	500,000	1	200
	Surfactant	300,000	2	50
	Plastic	16,000	2	10
	Miscellaneous	4,000	1	20-40
		4,540,000	1	250
		70,000	1	5
		15,000	2	10
		10,000	8	6
		16,000	2	5

Table 6-3. (continued)

Activity	Product	Production volume (kkg/yr)	Exposure duration and frequency	
			(hr/day)	(day/yr)
Disposal	Coating	400,000	1	260
		1,000,000	1	10
		350,000	<1	80
		250	8	8
		120,000	1	10
		125,000	1	252
	Automotive products	3,000,000	3	312
		27,200	3	300
	Surfactant	300,000	1	50
	Miscellaneous	50,000	6-8	24
		50,000	8	10
		1,400,000	1-8	1-10
		10,000	1	6
Manufacture	Coating	200,000	8	30
		400,000	8	260
		500,000	8	120
		100,000	3	30
		720,000	6	89
		1,000,000	1	10
		400,000	6	14
		33,000	6	7
		350,000	<1	80
		454	8	60
		250	8	8
		492,000	4	80
		3,585,000	8	250
		80,000	6	9
		50,000	8	15
		450,000	6	18
		120,000	1	10
		35,000	6	5
		125,000	8	252
		80,000	10	7
		500,000	8	15
		300,000	8	5
		450,000	8	120

Table 6-3. (continued)

Activity	Product	Production volume (kkg/yr)	Exposure duration and frequency	
			(hr/day)	(day/yr)
	Electrodeposition chemicals	1,750,000	8	150
		1,000,000	5	4
		45,000	6	6
	Adhesives	1,500,000	8	22
		144,000	1-2	30
		2,000	1	40
		4,000,000	1	4-32
		1,500,000	8	100
		27,216	1	200
		4,540,000	8	77
	Pigment	300,000	6	7
		150,000	1	11
		4,500,000	1	150
	Photographic component	5,000	8	250
		5,000	8	250
		100,000	8	75-100
		30	8	2-6
		50	5	1
		908	1	20-35
	Emulsifier	45,000	1	10
		45,000	1	10
		200,000	8	140
	Automotive products	16,000	4	96
		3,000,000	1-4	312
		27,200	1-4	300
	Surfactant	1,600,000	6	7
		500,000	8	5

Table 6-3. (continued)

Activity	Product	Production volume (kkg/yr)	Exposure duration and frequency	
			(hr/day)	(day/yr)
	Resin (unspecified)	300,000	8	200
		2,500	8	24
	Plastic	350,000	4	20
		4,540,000	4	50
	Miscellaneous	50,000	8	10
		300,000	8	100-200
		650,000	6	13
		1,400,000	3-8	62-250
		100,000	8	20
		110,000	5	20
		1,500	8	20-25
		25,000	8	50
		8,000	6	5
		14,000	3	36
		260,000	8	330
		4,540	2	10
		10,000	2	6
		4,000	8	2

- Cleaning operations generally last from one to two hours.

- Disposal exposures may range from less than one to eight hours in duration.

- The duration of manufacturing exposure depends on the nature of the process. Both batch and continuous manufacturing may result in eight hours of exposure per worker per day (i.e., continuous exposure during a full 8-hour shift); the number of operational days varies.

The generalizations above can be used to estimate frequency and duration of exposure. Alternatively, the assessor can consult Table 6-3 and choose the most applicable data, i.e., that matching the activity, product, or volume of the chemical being assessed. This approach should be used with care, since the data base is limited.

6.3.2 Worklife

Occupational exposure assessments of substances suspected to be carcinogenic or to have other latent effects often require an estimate of the length of employment in the exposure situation. It is not possible to estimate the period of time worked by any individual in a particular job or industry; it may range from a day to over 40 years. The best available data simply estimate the total number of years men and women work (see Table 6-4). These data can be used directly to project exposure if one assumes that an individual holds the same job for his or her entire life. It should be noted that "worklife expectancy" is declining for men; this is attributed to earlier retirement made possible by increased benefits and the second paycheck earned by a growing number of working women (Fullerton and Byrne 1976).

Table 6-4. Length of Working Life for Men and Women

Expectancy at birth in years	1940	1950	1960	1970
Men				
Life expectancy	61.2	65.5	66.8	69.6
Work expectancy	38.1	41.5	41.1	40.3
Nonwork expectancy	23.1	24.0	25.7	29.3
Women				
Life expectancy	65.7	71.0	73.1	74.7
Work expectancy	12.1	15.1	20.1	22.3
Nonwork expectancy	53.6	55.9	53.0	52.4
Women's worklife as a percent of men's worklife	31.6	36.3	48.6	57.3

Source: Fullerton and Byrne 1976

7.0 CALCULATING EXPOSURE

7.1 Introduction

Inhalation and dermal contact constitute the main routes of exposure in occupational settings, with inhalation exposure being the more common of the two. The subsections below present equations for calculating exposure via both of these routes. In addition, ingestion exposure can result from (1) inhalation of non-respirable contaminated particulates (see Section 2), (2) deposition in the mouth via hand-to-mouth contact, or (3) settling of airborne particles on the lips. This section, therefore, also addresses means of calculating exposure due to contaminant ingestion.

Calculation of exposure basically involves combining knowledge of the level of contamination of a given medium with consideration of the degree of worker contact with the medium. Thus, for non-occupational exposure assessments, this calculation takes into account not only contaminant concentrations but also pertinent inhalation rates, ingestion rates or area of skin exposed, and the frequency and duration of exposure events. However, in assessing occupational exposure, one should also consider the use of protective measures.

Although data quantifying contaminant concentrations in environmental media can generally be used directly to estimate exposure to receptors in most exposure assessment situations, this will not necessarily be the case in occupational analyses. Industry is well aware of many of the dangers posed by handling or processing chemical substances, and workers in industrial or commercial settings will often have the option or may be required to use protective equipment and/or clothing to reduce or eliminate their exposure to the substances with which they work. Thus, for any given occupational exposure assessment, the exposure reduction achievable through use of protective measures must be considered. Basically this analysis will involve addressing the following questions:

- What type of protective measures are used (e.g., protective equipment such as respirators or protective clothing)?

- What is the relationship between the length of time workers use the protective measure and the length of time they are in a contaminated environment within the workplace?

- What is the effectiveness of the protective measures in reducing the level of exposure experienced by the workers?

Selection of protective equipment or clothing is often very situation-specific. Information describing protective equipment and clothing appropriate for specific types of exposure can be obtained from

the literature and from industry sources. Appendix B presents a bibliography of literature sources on protective clothing (adapted from USEPA 1982). While the source materials listed in this appendix primarily pertain to pesticides, these references also supply a significant degree of insight into the types of protective measures generally available to industry. Direct industry contact may yield the best and most current information describing the types of protective clothing and equipment used in specific situations. The type of protective measure used will generally be a function of the type of exposure potential involved (i.e., inhalation, dermal contact, etc.), and the type of activities that are likely to bring workers into contact with toxic chemicals. The material from which the protective equipment or clothing is made will depend primarily on the physical/chemical properties of the materials to be handled.

Once the questions previously listed have been answered, data quantifying the degree of protection afforded by each pertinent protection measure can be used to estimate worker exposure. This is accomplished by adjusting (reducing) estimates of the amount of chemical with which workers are likely to come into contact by an amount equal to the degree of protection provided by each measure. If use of protective measures is voluntary rather than mandatory, the degree of actual use in the workplace may not be well documented. In such cases it will be beneficial to calculate a range of worker exposure reflecting both the exposure that results when no protective measures are taken as well as that which results when protective clothing and/or equipment is used throughout the exposure period.

The degree of protection provided by protective clothing, respirators, etc., can be factored into the exposure equations presented below as the protection factor (P). When empirical data on the efficiency of such devices are not available, it may be convenient to assume a generic protection factor of 0.1 to 0.01 to represent an assumed efficiency of 90 or 99 percent, respectively.

7.2 Inhalation Exposure

The standard equation for calculating inhalation exposure is as follows:

$$IHX = IR \times DU \times FQ \times C \times P \qquad (7\text{-}1)$$

where

IHX = inhalation exposure (mg/yr)
IR = inhalation rate (m^3/hr)
DU = duration of exposure event (hours)
FQ = frequency of exposure (events per year)
C = indoor air concentration of a given constituent (mg/m^3)
P = protection factor.

Inhalation rate (IR) is expressed in m^3/hr; values for different levels of activity are summarized in Table 7-1. The protection factor (P) accounts for the use of a respirator (see Section 7.1). The frequency and duration parameters are discussed in Section 6.

This equation can be modified for chemicals present in the air as particulates, to account for the partitioning of particles between the gastrointestinal tract and the lungs as a function of particle size. Total exposure to particulates calculated by Equation 7-1 can be differentiated into pulmonary exposure (IHX_p) and gastrointestinal exposure (IHX_G) using Equations 7-2 and 7-3, respectively. This partitioning of inhalation exposure is an option that may be worthwhile for chemicals whose effects depend on the mode of entry into the body.

$$IHX_p = IR \times DU \times FQ \times C \times RF \times P \qquad (7\text{-}2)$$
$$IHX_G = IR \times DU \times FQ \times C \times NRF \times P \qquad (7\text{-}3)$$

where

RF = respirable fraction, which is the weight fraction of all inhaled particles deposited in the pulmonary airspaces.

NRF = nonrespirable fraction, which is the weight fraction of all inhaled particles deposited in the head or tracheobronchial regions.

Equations for calculating RF and NRF are presented in Volume 7 of this methods series (Versar 1984c). These equations require supporting data on particle size distribution. Since such data is rarely available, NRF and RF can be estimated by using the ICRP model presented as Figure 7-1, provided that data is available on particle mass median diameter. Results using this model are not as reliable as those using actual size distribution data, however.

7.3 Dermal Exposure

Despite the relative simplicity of most dermal exposure calculations, dermal exposure presents some conceptual difficulties that are not associated with inhalation or ingestion exposure. Exposure is defined as the amount of substance contacting the receptor and available for absorption. Absorption occurs when the substance crosses a physical barrier to penetrate the tissues of the receptor. "Contact" merely implies that the substance has touched the body of the receptor. "Availability" indicates that the substance has reached (but not crossed) the absorptive barrier. In the case of inhalation and ingestion, the substance is taken into a body cavity (mouth, lungs) prior

Table 7-1. Summary of Human Inhalation Rates for Men, Women and Children by Activity Group (m^3/hour)[a]

	Resting	Light	Heavy	Maximal (exercise)
Men	0.42	1.5	2.6	6.7
Women	0.41	10.5	1.5	5.4

[a] Derived from average lung ventilation values at different levels of activity as a function of age and sex, presented in reference man (ICRP 1974).

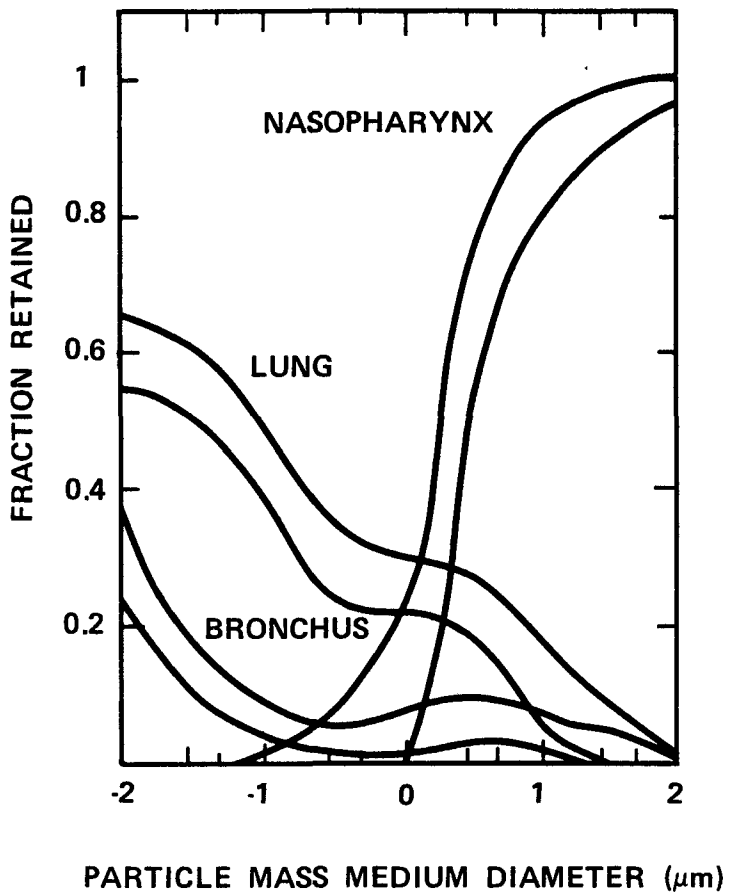

Figure 7-1. ICRP Model of Regional Respiratory Tract Deposition as a Function of Particle Size

Source: Meyer (1983)

to absorption. Therefore, the substance is made available by swallowing or inhaling, and the quantity to which the receptor is exposed is equivalent to the quantity inhaled or swallowed. In the case of dermal exposure, the substance contacts only the outer surface (skin) of the receptor and is not taken into the body until is has penetrated the skin (i.e., after it has been absorbed). This makes it difficult to define "exposure" when the receptor is in contact with large ambient volumes of liquids or gases, or with a small portion of a large solid surface.

The sections that follow delineate methods for use in estimating workplace dermal exposure via three pathways: (1) exposure to a film of liquid deposited on the skin; (2) exposure to dusts and powders deposited on the skin; and (3) exposure of skin to chemical substances contained in or adhering to solid matrices. A method for assessing exposure during immersion of skin in liquids is not presented. The major problem with attempting to assess exposure during immersion of skin in liquids is that the portion of the entire mass of the chemical substance in the solution that is in contact with the receptor is not known. Obviously, the skin of the receptor is not in contact with the entire volume of the solution. Attempts to assess exposure for this pathway without taking into consideration parameters needed to estimate absorbed dose may not be very meaningful.*

7.3.1 Exposure to a Film of Liquid Deposited on the Skin

Most significant, quantifiable dermal exposure involves liquid films on the skin. This may result from spills, brief immersion (e.g., of a hand) followed by rapid withdrawal so that a film remains, or by touching a wet surface. It may also occur by exposure to airborne droplets, provided that the spray is sufficient to form a continuous film when it hits the skin.

Exposure is usually expressed as mass per year. For each exposure, the assessor determines the amount of substance deposited on the skin on the basis of (1) estimated volume of liquid deposited and (2) estimated concentration of subject chemical in the deposited liquid. This, multiplied by the number of annual exposures, yields total mass per year. Since exposure is by direct physical contact, no fate or transport related parameters are involved.

The product obtained by multiplying (1) the area of skin likely to be exposed during ordinary contact by (2) the film thickness is an estimate of the volume of liquid on the skin. This parameter is independent of the quantity of liquid initially contacted, since most liquid spilled on the skin will drip off immediately and not be available for absorption. The film thickness of a liquid can be determined using the following equation:

*Refer to Versar (1985) for a discussion of contaminant dose estimation using chemical-specific absorption rate data. It is recognized, however, that data quantifying chemical flux across huma skin from concentrated, dilute, or mixed solutions is sparse at best. Also, the method presented in Versar (1985) does not take into account time-dependent absorption, and its application is thu further constrained.

$$\text{Film thickness (cm)} = \frac{\text{amount of liquid retained on skin (mg/cm}^2)}{\text{density of liquid (g/cm}^3 \times 1000 \text{ (mg/g)}}$$

Values of amount of liquid retained on skin for six selected liquids are presented in a study to assess exposure resulting from retention of chemical liquids on hands (Versar 1984f). In this study, the retention of selected liquids on the hands of human volunteers was measured under five conditions of exposure. The five conditions included: (1) initial uptake; (2) secondary uptake; (3) uptake from handling a rag; (4) uptake from spill clean-up; and (5) uptake from immersion of a hand in a liquid.

Initial uptake, secondary uptake, and uptake from handling a rag all involve contact by an individual with a rag saturated with a liquid for which adherence to the skin was being determined. The test for initial uptake, a rag saturated with liquid was rubbed over the front and back of both hands for the first time during an exposure event. To test for secondary uptake, as much liquid that adhered to the skin during initial uptake was removed as was possible using a clean rag. A rag saturated with the liquid was then rubbed over the front and back of both hands for the second time during an exposure event. To test for uptake from handling a rag, a rag saturated with a liquid was rubbed over the palms of both hands for the first time during an exposure event in a manner simulating handling of a wet rag. In the test for uptake from immersion, an individual immersed one hand in a container of luquid, removed the hand, then allowed the liquid to drip from the hand back into the container for 30 seconds (one minute for cooling oil). In the test for uptake from spill cleanup, an individual used a clean rag to wipe up 50 milliliters (ml) of liquid poured onto a plastic laminate counter top.

For each exposure condition, the quantity of liquid retained on the hands was determined (1) immediately following the exposure condition, (2) after a partial wipe, and (3) after a full wipe (except in the cases of uptake by immersion and uptake from spill cleanup). A partial wipe refers to a light, quick wipe with a clean rag. A full wipe refers to a thorough, complete wipe with a clean rag.

The six liquids used in this study were selected to represent a broad range of kinematic viscosities. The liquids used were (1) mineral oil, (2) cooking oil; (3) water-soluble oil (bath oil), (4) oil/water emulsion (50:50, water:water-soluble oil), (5) water, and (6) water/ethanol (50:50). Table 7-2 presents values of film thickness for these six liquids under each of the five exposure conditions immediately following exposure, after a partial wipe, and after a full wipe. Many types of liquids were not included in this study. To assess dermal exposure to

Table 7-2. Film Thickness Values of Selected Liquids under Various Experimental Conditions (10^{-3} cm)

	Mineral oil	Cooking oil	Bath oil	Oil/ water	Water	Water/ ethanol
Initial uptake						
Initial film thickness of liquid on hands	1.62	1.63	1.99	2.03	2.34	3.25
Film thickness after partial wipe	0.69	0.68	0.76	1.55	1.83	2.93
Film thickness after full wipe	0.18	0.14	0.18	1.20	1.72	2.51
Secondary uptake						
Initial film thickness liquid on hands	1.43	1.51	1.80	1.60	2.05	2.95
Film thickness after partial wipe	0.47	0.53	0.51	1.19	1.39	2.67
Film thickness after full wipe	0.14	0.11	0.12	0.92	1.32	2.60
Uptake from handling a rag						
Initial film thickness of liquid on palms	1.64	1.50	2.04	1.88	2.10	4.17
Film thickness after partial wipe	0.44	0.34	0.53	1.21	1.48	3.70
Film thickness after full wipe	0.13	0.01	0.21	0.96	1.37	3.58

Table 7-2. (continued)

	Mineral oil	Cooking oil	Bath oil	Oil/ water	Water	Water/ ethanol
Uptake from immersion						
Estimated initial film thickness of liquid on hand	5.88	11.28	12.06	9.81	4.99	6.55
Estimated film thickness of liquid remaining after partial wipe	1.49	1.59	1.51	2.42	2.14	2.93
Uptake from Spill Cleanup						
Estimated initial film thickness of liquid on hand	1.23	0.73	0.89	1.19		
Estimated film thickness of liquid remaining after partial wipe	0.55	0.51	0.48	1.36		

films deposited on the skin for liquids that are not listed in this table, it is suggested that one use as a default value data for film thickness for the liquid listed in the table that most closely resembles the liquid being assessed. Two physical properties that may be used to compare liquids are kinematic viscosity and density. The experimentally determined values for density and kinematic viscosity for the six liquids used in the study to assess exposure from retention of liquids on hands are presented in Table 7-3. Note that the error from using default values as values of film thickness for liquids not listed in Table 7-2 may be considerable. In the study to assess exposure from retention of liquids on hands, the relationship between kinematic viscosity and mass of liquid retained per cm^2 of skin was examined. Although liquid retention was found to increase with kinematic viscosity, the data did not support a functional relationship between these two parameters. Additional liquids need to be examined to determine whether such functional relationship exists between these two parameters.

The basic equation for exposure via a liquid film is as follows:

$$DEX = WF \times DSY \times AV \times T \times FQ \times P \qquad (7\text{-}4)$$

where

DEX = annual dermal exposure (mg/yr)
WF = weight fraction of chemical in mixture (unitless)
DSY = density of formulation (mg/cm^3)
AV = available skin area (cm^2)
T = film thickness (cm)
FQ = frequency (exposure events/yr)
P = protection factor

The density factor (DSY) is required to convert the units. Note that "ml" is taken to be equivalent to cubic centimeters. The density is presumed to be that of the subject chemical, unless it is an ingredient of a mixture. In that case, the density of the mixture can be presumed to be the density of the principal solvent. Similarly, the weight fraction parameter (WF) is necessary only when the substance is contacted as an ingredient of a mixture.

Available skin area (AV) depends on the operation being performed. Routine spills will probably be to one hand. Maintenance activities that involve touching wet surfaces may involve the palm only. More extensive spills are not predictable occurrences. Surface areas of body parts are given in Table 7-4.

Table 7-3. Experimentally Determined Values for Density and Kinematic Viscosity for Six Selected Liquids

Liquid	Density (g/cm^3)	Kinematic viscosity (cSt)
Mineral oil	0.8720	183.0
Cooking oil	0.9161	65.4
Bath oil	0.8660	67.2
Bath oil/water	0.9357	4.19
Water	0.9989	1.02
Water/ethanol	0.9297	2.55

Source: Versar 1984f.

Table 7-4. Surface Area of Body Regions

Body region	Percent of total surface area	Generic Surface area (cm^2) Men	Women	Average Adult	Reference
Total body, adults	100	18,000	16,000	17,000	1
Head and neck	9	1,620	1,440	1,530	1
Face	3	540	480	510	2
Neck	3	540	480	510	2
Scalp	3	540	480	510	2
Arms (both, including hands)	18	3,240	2,880	3,060	1
Outstretched palm and fingers	1	180	160	170	1
Hands (each 2.25%)	4.5	810	720	765	2
Front of trunk	18	3,240	2,880	3,060	1
Back of trunk	18	3,240	2,880	3,060	1
Breast area, back and front	3	540	480	510	3
Perineum	1	180	180	180	1
Lower abdomen, front and back	6	1,080	960	1,030	3
Trunk excluding upper chest	24	4,320	3,840	4,080	3
Lower limbs (each 18%)	36	6,480	5,760	6,120	1
Foot	3	540	480	510	3
Lower leg to mid-calf, each leg	6	1,080	960	1,020	3
Mid-calf to mid-thigh, each leg	6	1,080	960	1,020	3
Upper thigh, each leg	6	1,080	960	1,020	3
Total body, 10-year old child[a]	100	9,610	9,610	-	1
Total body, preschool averaged[b]	100	49,030	49,030	-	3

[a]Age of 10 selected as average for school-aged children because these children are about midway in surface area between infants and adults. Data from ICRP 1974.

[b]Average of surface area of infants, 1, 2, 3, and 4 year olds. Corresponds to the surface area of a child about 18 months old. Data from ICRP 1974.

Source: 1. ICRP 1974
2. Berkow 1924, 1931.
3. JRB 1983

The protection factor (P) is explained in Section 7.1. It should be noted that Equation 7-4 is limited to cases where the film is continuous and of a constant, predictable thickness. The equations may overestimate exposure via a liquid spray where the droplets do not flow together to form a continuous film, and it may underestimate exposure to such substances as paints and adhesives that are formulated specifically to adhere to surfaces. The latter may form layer upon layer on the skin so that final thickness is not predictable.

7.3.2 Exposure to Dusts and Powders

Exposure to dusts and powders is conceptually similar to exposure to liquid films, since it involves the deposition of a limited quantifiable amount of product on the skin. Calculation of exposure in both cases uses essentially the same parameters, with "dust adherence" roughly analogous to "film thickness." However, dust adherence is expressed directly as mass per unit skin surface and does not require a density factor to convert volume to mass.

Unfortunately, data on dust adherence to skin is limited. Data generated by the Toxic Substance Control Commission of the State of Michigan indicate the following (Harger 1979):

- Vacuum cleaner dust sieved through an 80-mesh screen adheres to human hands at 3.44 mg/cm^2.
- Dust of the clay mineral kaolin adheres to hands at 2.77 mg/cm^2.
- Commercial potting soil adheres to hands at 1.45 mg/cm^2.

The conditions of the experiment were not reported. Since the research was performed to support predictions of occupational exposure to the chemical MBOCA, and since occupational contact is likely to yield maximum saturation of the skin, it will be assumed that the experimental conditions were designed to encourage maximum adherence (Versar 1982). However, it is not known which physical or chemical properties of a powdered substance determine the extent of its adherence to skin; therefore, it is not possible to predict the extent to which the three substances tested may represent substances commonly encountered in the occupational environment.

Until more data become available, the value for vacuum cleaner dust may be used as an upper limit. Substances that are lipophilic or surfactant, or that tend to clump in the presence of skin moisture, can adhere to a greater extent.

The following equation can be used to calculate dermal exposure to dusts.

$$DEX = WF \times AV \times FQ \times DA \times K \qquad (7\text{-}5)$$

where

DEX = exposure (mg/yr)
WF = weight fraction of chemical in material contacted (unitless)
AV = available skin area (cm^2)
FQ = frequency (events/year)
DA = maximum dust adherence (see above), (mg/cm^2)
K = arbitrary factor, unitless, ranging from 0 to 1 to express fraction of maximum adherence expected in a particular case.

7.4 Ingestion Exposure

Two types of ingestion exposure are likely to occur in the workplace. The first is ingestion as a subset of inhalation exposure, i.e., the gastrointestinal deposition of inhaled airborne particulates too large to be respired. This is discussed in Section 7.2 (see Equation 7-3). The other type of exposure follows from initial dermal exposure. In this situation, a chemical that has been deposited on the skin is transferred to the mouth area and accidentally ingested. The magnitude of such exposure would depend on (1) the magnitude of the initial dermal exposure; (2) the extent to which this is transferred to the mouth area; and (3) the extent to which the chemical is then taken into the mouth (e.g., by licking the lips). The second and third requirements are virtually impossible to quantify. (It is assumed that obviously contaminated hands would not be directly placed into the mouth, although employees working with highly toxic substances have been known to handle food or cigarettes without washing their hands.)

Dermal exposure may lead to ingestion exposure more directly in very dusty environments where dust is deposited directly on the face. As a reasonable worst-case, it can be assumed that the entire quantity of dust that covers the lips is ingested. This can be estimated using the dermal exposure Equation 7-5. The surface area of the lips has been estimated to be 7 cm^2 (Versar 1984e). These types of ingestion exposure are not possible when the employee wears a respirator.

It should be noted, however, that differentiation between inhalation/ingestion or dermal/ingestion exposure may not be necessary in all cases. Such exposure is only important in those situations where the health effects or absorption of a chemical depend on the exposure route.

8. REFERENCES

Agranoff T, ed. 1980. Modern plastics encyclopedia. New York, NY: McGraw-Hill Publishing Company.

American Institute of Mining, Metallurgical, and Petroleum Engineers. 1975. Industrial minerals and rocks. New York, NY.

Amoco Chemical Corporation. 1980a. Product literature. Polypropylene: applications. Marketing Division-Polymers. Chicago, IL.

Amoco Chemical Corporation. 1980b. Product Literature. Polystyrene: applications. Marketing Division-Polymers. Chicago, IL.

Ayer HE, Burg J. 1973. Time-weighted averages vs. maximum personal sample. Boston, MA: Presented at 1973 American Hygiene Conference.

BLS. 1980. Handbook of labor statistics. Washington, DC: Bureau of Labor Statistics, U.S. Department of Labor, Bulletin 2070.

BLS. 1981. Employment and earnings. Washington, DC: Bureau of Labor Statistics. U.S. Department of Labor.

Bennett H. 1933-1981. The chemical formulary. New York, New York. Chemical Publishing Company.

Berkow SG. 1924. A method of estimating the extensiveness of lesions (burns and scalds) based on surface area proportions. Arch. surg. 8:138-148.

Berkow SG. 1931. Value of surface area proportions in the prognosis of cutaneous burns and scalds. Amer. J. Surg. 11:315-317.

Berman. 1982. Methods for estimating workplace exposure to PMN substances. Clement Associates, Inc. Washington, DC: Economics and Technology Division, U.S. Environmental Protection Agency.

Brownstein AM, ed. 1972. U.S. petrochemicals. Technologies, markets and economics. Tulsa, OK: The Petroleum Publishing Company.

Bureau of Mines. 1980. Mineral commodity profiles. Washington, DC: U.S. Department of the Interior.

Bureau of Mines. 1981a. Mineral industry commodity profiles. Washington, DC: U.S. Department of the Interior.

Bureau of Mines. 1981b. Minerals yearbook. Washington, DC: U.S. Department of the Interior.

Bureau of the Census. 1984. Occupation by industry. Washington, DC: U.S. Department of Commerce.

Chamberlain AC. 1975. The movement of particles in plant communities. In: Vegetation and the atmosphere, Vol. 1, Principles, London: Monteith JL, ed. Academic Press, pp. 155-203.

Clement. 1981. Mathematical models for estimating work place concentration levels: a literature review. Washington, DC: Clement Associates, Inc. Prepared for Economics and Technology Division, U.S. Environmental Protection Agency.

Committee on Industrial Ventilation. 1980. Industrial ventilation. A manual of recommended practice. Presented at the American Conference of Government and Industrial Hygienists, Ann Arbor, MI: Sponsor: Edwards Brothers, Inc.

Considine DM. 1974. Chemical and process technology encyclopedia. New York, NY: McGraw-Hill Publishing Company.

Dixon et al. 1983. Methods for enumerating and characterizing populations exposed to chemical substances. Draft report. Washington, DC: Versar Inc., Prepared for Office of Toxic Substances, U.S. Environmental Protection Agency. Contract No. 68-01-6271.

Engelmann RJ. 1968. The calculation of precipitation scavenging. In: Meteorol. and Atomic Energy (D. Slade, ed.) TID-24190, USAEC, 208-220.

Freed et al. 1983. Methods for assessing exposure to chemical substances in the ambient environment. Washington, DC: Versar Inc. Prepared for Office of Toxic Substances, U.S. Environmental Protection Agency. Contract No. 68-01-6271.

Fullerton HN, Byrne JJ. 1976. Length of working life for men and women, 1970. Monthly Labor Review. February 1976, pp. 31-35.

Gaylord and Mark. 1964-1976. Encyclopedia of polymer science and technology - plastics, resins, rubbers, fibers. New York, NY: Interscience Publishers (John Wiley and Sons).

Gosselin RE, Hodge HC, Smith RP, Gleason MN, eds. 1976. Clinical toxicology of commercial products. 4th ed. Baltimore, MD: The Williams and Wilkins Company.

Hanna SR and Hosker RP. 1980. Atmospheric removal processes for toxic chemicals. Oak Ridge, TN: Atmospheric Turbulence and Diffusion Laboratory. National Oceanic and Atmospheric Administration. U.S. Department of Commerce.

Hanna SR, Briggs GA, and Hosker RP. 1982. Atmospheric Diffusion, Atmospheric Turbulence and Diffusion Laboratory, National Oceanic and Atmospheric Administration, Prepared for U.S. Department of Energy, DOE/TIC-11223 (DE82002045).

Harger JRE. 1979. A model for the determination of an action level for removal of curene contaminated soil. Memorandum to P.S. Cole, Executive Director. Lansing, Michigan Toxic Substance Control Commission. (October 25, 1979).

Hendry DG and Kenley RA. 1979. Atmospheric reaction products of organic compounds. Washington, DC: SRI International. Prepared for the Office of Chemical Control, Office of Toxic Substances, U.S. Environmental Protection Agency.

Herrick EC, King JA, Ouellette RP, Cheremisinoff PN. 1979. Unit processes guide to organic chemical industries. Ann Arbor, MI: Ann Arbor Science Publishers, Inc.

ICRP. 1974. International Commission on Radiological Protection. Report for the task group on Reference Man. New York: Pergamon Press.

ITE. 1980. Organic chemicals manufacturing, Volumes 1-10. Research Triangle Park, NC: Office of Air Quality Planning and Standards, U.S. Environmental Protection Agency. EPA-450/3-80-023.

JRB. 1980. Draft report. Methodology for materials balance. Washington, DC: Office of Toxic Substances, U.S. Environmental Protection Agency

JRB. 1983. Generic premanufacture notification report on surfactants. Draft Report. Washington, DC: U.S. Environmental Protection Agency. Contract No. 68-01-5793.

Kent JA, ed. 1974. Reigel's handbook of industrial chemistry, seventh ed. New York, NY: The Nostrand Reinhold Company.

Kirk-Othmer. 1978-1984. Encyclopedia of chemical technology. 3rd ed. New York, NY: John Wiley and Sons.

Kline CH. 1977a. Kline guide to the chemical industry - industrial marketing guide. Charles H. Kline and Co., Inc. Fairfield, NJ.

Kline CH. 1977b. Kline guide to the packaging industry - industrial marketing guide. Charles H. Kline and Co., Inc. Fairfield, NJ.

Kline CH. 1978a. Kline guide to the paint industry - industrial marketing guide. Charles H. Kline and Co., Inc. Fairfield, NJ.

Kline CH. 1978b. Kline guide to the plastics industry - industrial marketing guide. Charles H. Kline and Co., Inc. Fairfield, NJ.

Kline CH. 1980. Kline guide to the paper industry - industrial marketing guide. Charles H. Kline and Co., Inc. Fairfield, NJ.

Leidel N, Busch K, Lynch J. 1977. Occupational exposure sampling strategy manual. Cincinnati, OH: National Institute for Occupational Safety and Health.

Lowenheim FA, Moran MK. 1975. Faith, Keyes and Clark industrial chemicals, 4th edition. New York, NY: John Wiley and Sons.

Lyman WJ, Reehl WF, Rosenblatt DH. 1982. Handbook of chemical property estimation methods. New York: McGraw-Hill.

Mannsville Chemical Products. 1976. Chemical products synopsis. Mannsville, NY.

McDaniel. 1983. Flare efficiency study. Engineering-Science, Inc. Washington, DC: Office of Research and Development. EPA Contract No. 68-02-3541-6. EPA-600/2-83-052.

Meyer. B. 1983. Indoor air quality. Reading, MA: Addison-Wesley Publishing Company, Inc.

OMB. 1972. Office of Management and Budget. Standard industrial classification (SIC) manual. Washington, DC: U.S. Government Printing Office.

Olishifski TB, ed. 1979. Fundamentals of industrial hygiene. 2nd ed. Chicago: IL: National Safety Council.

Piotrowski J. 1977. Exposure tests for organic compounds in industrial toxicology. Washington, DC: National Institutes for Occupational Safety and Health. NIOSH-77-144.

Porter WK. 1983. Division of Health Sciences Laboratories, U.S. Consumer Product Safety Commission. Briefing paper on n-hexane: evaluation of consumer exposure and health risk. Interagency letter to Stephen Nacht, Exposure Evaluation Division, U.S. Environmental Protection Agency.

Proctor NH, Hughes TP. 1978. Chemical Hazards of the Workplace. Philadelphia, PA: J. P. Lippincott Company.

Radian. 1979. Organic Chemicals. Chemical producers data base. Austin, TX.

SAI 1982. Systems Applications, Inc. Human exposure to atmospheric concentrations of selected chemicals. Research Triangle Park, NC: Office of Air Quality Planning and Standards, U.S. Environmental Protection Agency. EPA Contract No. 68-02-3066.

SRI. 1980. Chemical economics handbook (updated yearly). Menlo Park, CA: SRI International.

SRI. 1984. Directory of chemical producers. Annual publication. Menlo Park, CA: SRI International.

Sawyer RN, Spooner CM. 1978. Sprayed asbestos-containing materials in buildings: a guidance document. Research Triangle Park, NC: U.S. Environmental Protection Agency. EPA-450/2-78-014.

Sehmel GA. 1980. Particle resuspension: A review. Environ. Inter. 4:107-127.

Shreve N. 1967. Chemical process industries, 3rd ed. New York, NY: McGraw-Hill Publishing Company.

Slade, David H. (Editor). 1968. Meteorology and atomic energy. Air Resources Laboratories. Environmental Science Services Administration, U.S. Department of Commerce. Prepared for United States Atomic Energy Commission. TID-24190, July 1968.

Slimak K, et al., 1980. Methodology for materials balances: Draft report. Washington, DC: Prepared for the Office of Pesticides and Toxic Substances, Survey and Analysis Division. U.S. Environmental Protection Agency. Contract No. 68-01-5793.

Sutton DJ, Nodolf KM, Makino KK. 1976. Predicting ozone concentrations in residential structures. ASHRAE Journal. September 1976. pp. 21-26.

Sittig M. 1980. Pesticide manufacturing and toxic materials control encyclopedia. New Jersey: Noyes Data Corporation.

Treybal RE. 1968. Mass transfer operations. New York, NY: McGraw Hill.

USEPA. 1980a. Interim guidelines and specifications for preparing quality assurance project plans. U.S. Environmental Protection Agency. Washington, DC: Office of Research and Development, QAMS-005/80.

USEPA. 1980b. Quality assurance program plan for the Office of Toxic Substances. Washington, DC: Office of Pesticides and Toxic Substances, U.S. Environmental Protection Agency.

USEPA. 1980c. Organic chemical manufacturing volume 3: storage, fugitive, and secondary sources. Research Triangle Park, NC: Office of Air Quality Planning and Standards, U.S. Environmental Protection Agency. EPA-450/3-80-025.

USEPA. 1980d. Organic chemical manufacturing. Volume 10: selected processes. Research Triangle Park, NC: Office of Air Quality Planning and Standards, U.S. Environmental Protection Agency. EPA-450/3-80-028e.

USEPA. 1980e. Volatile organic compound (VOC) species data manual. Second edition. Research Triangle Park, NC: Office of Air Quality Planning and Standards, U.S. Environmental Protection Agency.

USEPA. 1982. Bibliography of protective clothing data. Washington, DC: Protective Clothing Work Group, Office of Pesticide Programs. U.S. Environmental Protection Agency.

USEPA. 1983. Methods for assessing exposure to windblown particulates. Washington, DC: Office of Health and Environmental Assessment, U.S. Environmental Protection Agency. EPA-600/4-83-007.

USEPA. 1984. Reactor processes in synthetic organic chemical manufacturing industry - background information for proposed standards. Research Triangle Park, NC: Office of Air Quality Planning and Standards, U.S. Environmental Protection Agency.

USITC. 1984. U.S. International Trade Commission. Synthetic organic chemicals. U.S. production and sales. Washington, DC: U.S. Government Printing Office.

Versar. 1980. Non-aquatic environmental fate of 129 priority pollutants. Draft report. Prepared for U.S. Environmental Protection Agency, Office of Water Planning and Standards, Washington, DC. Contract No. 68-01-3852.

Versar. 1982. Exposure assessment for 4,4'-methylenebis (2-chloroaniline) (MBOCA). Prepared for the Office of Toxic Substances, U.S. Environmental Protection Agency, Washington, DC. Contract No. 68-01-6271.

Versar. 1983. Emissions factors handbook. Version II. Draft report. Prepared for the Office of Policy and Resource Management, U.S. Environmental Protection Agency, Washington, DC. Contract No. 68-01-6715,

Versar. 1984f. Exposure assessment for retention of chemical liquids on hands. Preliminary draft report. Prepared for the Office of Toxic Substances, U.S. Environmental Protection Agency, Washington, DC. Contract No. 68-01-6271.

Versar. 1984e. Estimation of exposure to volatile chemicals evaporating from flat surfaces. Draft report. Prepared for the Office of Toxic Substances, U.S. Environmental Protection Agency, Washington, DC. Contract No. 68-01-6272.

Versar. 1984a. Methods for assessing exposure to chemical substances: Introduction. Prepared for Office of Toxic Substances. U.S. Environmental Protection Agency. Washington, DC.

Versar. 1984b. Exposure assessment for 1,3-butadiene. Draft final report. Prepared for the Office of Toxic Substances, U.S. Environmental Protection Agency, Washington, DC. EPA Contract No. 68-02-3968.

Versar. 1984c. Methods for assessing consumer exposure to chemical substances. Draft report. Prepared for the Office of Toxic Substances, U.S. Environmental Protection Agency, Washington, DC:

Versar. 1984d. Indoor air methodology: Draft final report. Prepared for Exposure Evaluation Division, U.S. Environmental Protection Agency, Washington, DC. Contract No. 68-01-6271.

Versar. 1985. Versar Inc. Methods for assessing consumer exposure to chemical substances. Prepared for Office of Toxic Substances, Exposure Evaluation Division, Exposure Assessment Branch, U.S. Environmental Protection Agency. Washington, D.C. Contract No. 68-02-3968. Task 63. August, 1985.

APPENDIX A

PROCESSES AND EXPOSURE POTENTIAL

METHODS FOR ASSESSING OCCUPATIONAL EXPOSURE TO CHEMICAL SUBSTANCES

A-1. SYNTHETIC ORGANIC CHEMICALS MANUFACTURE
A-2. PLASTICS MANUFACTURE AND PROCESSING
A-3. LUBRICANTS AND HYDRAULIC FLUIDS PROCESSING
A-4. GENERAL MANUFACTURING PROCESSES

Table of Contents

	Page No.
APPENDIX A-1 - SYNTHETIC ORGANIC CHEMICALS MANUFACTURE.....	131
1.0 ALKYLATION PROCESSES.....	132
1.1 Description of Discharge.....	132
2.0 AMINATION BY AMMONOLYSIS.....	135
2.1 Description of Discharges.....	135
3.0 AMMOXIDATION.....	135
3.1 Description of Discharges.....	140
4.0 CARBONYLATION.....	140
4.1 Description of Discharges.....	140
5.0 CONDENSATION.....	144
5.1 Description of Discharges.....	144
6.0 CATALYTIC CRACKING.....	151
6.1 Description of Discharges.....	154
7.0 DEHYDRATION.....	154
7.1 Description of Discharges.....	154
8.0 DEHYDROGENATION.....	154
8.1 Description of Discharges.....	157
9.0 DEHYDROHALOGENATION.....	157
9.1 Description of Discharges.....	162
10.0 ESTERIFICATION.....	162
10.1 Description of Discharges.....	162
11.0 HALOGENATION.....	166
11.1 Description of Discharges.....	166

Table of Contents (Continued)

Page No.

12.0 HYDRODEALKYLATION..... 169

12.1 Description of Discharges..... 169
12.1.1 Benzene..... 169
12.1.2 Napthalene..... 169

13.0 HYDROGENATION..... 172

13.1 Description of Discharges..... 172

14.0 HYDROHALOGENATION..... 172

14.1 Description of Discharges..... 177

15.0 HYDROLYSIS AND HYDRATION..... 177

15.1 Description of Discharges..... 179

16.0 NITRATION..... 183

16.1 Description of Discharges..... 183

17.0 OXIDATION..... 183

17.1 Description of Discharges..... 186

18.0 OXYHALOGENATION..... 186

18.1 Description of Discharges..... 193

19.0 PHOSGENATION..... 193

19.1 Description of Discharges..... 193

20.0 POLYMERIZATION..... 196

20.1 Description of Discharges..... 196
20.2 Production Process - Polyvinyl Chloride by Polymerization..... 201

21.0 PYROLYSIS..... 201

21.1 Description of Discharges..... 205

Table of Contents (Continued)

	Page No.
22.0 REFORMING (STEAM) - WATER GAS REACTION.....	206
22.1 Description of Discharges.....	206
23.0 SULFONATION AND SULFATION.....	209
23.1 Description of Discharges.....	209
APPENDIX A-2 - PLASTICS MANUFACTURE AND PROCESSING	212
APPENDIX A-3 - LUBRICANTS AND HYDRAULIC FLUIDS PROCESSING	238
APPENDIX A-4 - GENERAL MANUFACTURING PROCESS	245

List of Tables

		Page No.
Table 1	Alkylation Products and Their Manufacture in 1980.....	133
Table 2	Amination Products and Their Manufacture in 1980.....	136
Table 3	Ammoxidation Products and Their Manufacture in 1980....	138
Table 4	Carbonylation Products and Their Manufacture in 1980...	141
Table 5	Condensation Products and Their Manufacture in 1980....	145
Table 6	Catalytic Cracking Products and Their Manufacture in 1979.....	152
Table 7	Dehydration Products.....	155
Table 8	Organic Chemicals Manufactured by Dehydrogenation.....	158
Table 9	Dehydrohalogenation Products and Their Production in 1979.....	161
Table 10	Esterification Products.....	163
Table 11	Halogenation Products and Their Manufacture in 1980....	167
Table 12	Organic Chemicals Manufactured by Hydrodealkylation....	170
Table 13	Hydrogenation Products and Their Production in 1979....	174
Table 14	Hydrohalogenation Products and Their Manufacture.....	176
Table 15	Hydrolysis Products and Their Production in 1980.....	180
Table 16	Nitration Products and Their Manufacture in 1980.....	184
Table 17	Oxidation Products and Their Production in 1979.....	187
Table 18	Oxyhalogenation Products and Their Manufacture in 1979.	191
Table 19	Phosgenation Products and Their Manufacture in 1980....	194
Table 20	Organic Chemicals Manufactured in Polymerization.....	197
Table 21	Organic Chemicals Manufactured by Pyrolysis.....	202
Table 22	Reforming Steam-Water Gas Products and Their Manufacture in 1980.....	207

List of Tables (Continued)

		Page No.
Table 23	Sulfonation and Sulfation Products and Their Production in 1979	210
Table 24	SIC Codes Applied to the Plastic Products Industry	213
Table 25	Description of Processes Employed in the Production of Plastic Parts	214
Table 26	Potential for Occupational Exposure During Plastics Processes	222
Table 27	Evolution of Carbon Monoxide in the Upper Part of the Processing Temperature Range (PPM)	226
Table 28	Carbon Monoxide Evolution in the Melting and Processing Temperature Range of Various Plastics	227
Table 29	Evolution of Aldehydes from Heated Polyolefins in Air	228
Table 30	Evolution of Certain Gases From Plastics At the Maximum Recommended Processing Temperature	229
Table 31	Atmosphere Analyses Near Plastics Processing Machinery	230
Table 32	Description of Processes Employed In the Assembly, Finishing, and Decoration of Plastics Parts	233
Table 33	Potential Inhalation Exposure From Manufacture of Lubricants	242
Table 34	Potential Dermal Exposure From Manufacture of Lubricants	243

List of Figures

		Page No.
Figure 1	Generalized process flow diagram for manufacture of alkylated organic compounds	134
Figure 2	Generalized flow diagram of amination plant	137
Figure 3	General ammoxidation process	139
Figure 4	A typical carbonylation process	142
Figure 5	A generalized flow diagram of a condensation process	150
Figure 6	A typical flow diagram for fluid catalytic cracking	153
Figure 7	Proposed ethanol manufacturing process by dehydration of ethanol	156
Figure 8	Typical dehydrogenation process	159
Figure 9	Flow diagram for vinylidene chloride from 1,1,2-trichloroethane	160
Figure 10	Manufacture of dimethyl terephthalate by esterification	165
Figure 11	Halogenation of hydrocarbon	168
Figure 12	Benzene production by hydrodealkylation	171
Figure 13	A typical hydrogenation process	173
Figure 14	A typical hydrohalogenation process: manufacture of vinyl chloride from acetylene and hydrogen chloride	178
Figure 15	General hydrolysis process	182
Figure 16	Process flow diagram for manufacture of nitrobenzene	185
Figure 17	Process flow diagram for model plant of uncontrolled maleic anhydride manufacture by benzene oxidation	190
Figure 18	Manufacture of trichloroethylene by oxychlorination	192

List of Figures

		Page No.
Figure 19	Flow diagram for diisocyanate production.....	195
Figure 20	Process flow diagram for the manufacture of polyvinyl chloride.....	199
Figure 21	A typical pyrolysis production process.....	204
Figure 22	Generalized flow diagram of a reforming (steam) - water gas process.....	208
Figure 23	Flow diagram for the manufacture of methyl methacrylate.....	211
Figure 24	Manufacture of lubricants from petroleum.....	241

APPENDIX A-1

Synthetic Organic Chemicals Manufacture

INTRODUCTION

This appendix is organized into 23 categories that correspond to the 23 major large-volume synthetic organic chemicals manufacturing industry (SOCMI) "unit process" components that carry out the fundamental synthesis reactions, e.g., halogenation, alkylation.

It provides a description of each unit process with available release data. With regard to its utility in occupational exposure assessments, this material is broadly useful in supporting development of a materials mass balance for a given chemical process, and is specifically useful for identifying waste streams to which workers in on-site industrial waste treatment facilities may be exposed.

1.0 ALKYLATION PROCESSES

Alkylation is the introduction of an alkyl radical to an organic compound by substitution or addition. The most common alkylation products are ethylbenzene and cumene. Other products and their 1980 production are found in Table 1. Figure 1 is a generalized process flow diagram for an alkylation process.

1.1 Description of Discharges

Releases from the alkylation processes occur as fugitive and particulate gaseous emissions, liquid wastes, and solid residues. The major sources of air contamination are: 1) feedstock emissions and 2) volatile by-products.

Wastewaters may be released from within the process if process operating conditions require. They may also occur from washdown of process vessels, or they may be formed during chemical reactions. These waste streams contain caustic and caustic-catalyst fines, and feedstock lead (from the lead alkyls process) will result from distillation column bottoms and product settling basins.

fugitive gaseous emissions -	may occur from valves, flanges, pump seals, compressor seals, pressure relief valves, drains, and cooling towers.
reactor -	gaseous releases may occur at the reactor vent.
caustic scrubber -	liquid waste may occur from caustic wash.
feedstock stripper -	gaseous releases may occur from the column vent. - sludge may be released as wastewater from the column bottoms.
purification columns -	gaseous releases may occur from the column vent. - liquid wastes may be released in the column bottoms.

Specific releases from alkylation processes are addressed in Versar (1982).

TABLE 1. ALKYLATION PRODUCTS AND THEIR MANUFACTURE IN 1980

Product	Amount* (kkg)	Feedstock	Other Required Processes
Acetic acid	NA	n-Butenes	Oxidation
Alkylbenzenes	94,347	Benzene Propylene tetramer	None
Alkylbenzenes (linear)	87,090	Benzene Linear olefins	None
Alkylbenzenes (linear)	157,850	Benzene Linear paraffins	Dehydrogenation
Benzene, xylenes	NA	Toluene	None
p-tert-Butylphenol	NA	Phenol Isobutene	None
Cumene	1,932,304	Benzene Propylene	None
Ethylbenzene	3,516,611	Benzene Ethylene	None
N-isopropyl-N'-phenol-p--phenylenediamine	NA	p-Chloronitrobenzene Aniline Acetone	Dehydrohalogenation Hydrogenation
Lead alkyls	>259,455	Ethyl chloride (Alkyl chlorides)	None
p-nonyl phenol	147,690	Phenol Propylene trimer	None
Phenol, acetone	1,436,255	Benzene Propylene	Acid cleavage Hydrolysis Oxidation
Pyromellitic deanhydride	NA	1,2,4-trimethylbenzene (pseudocumene)	Oxidation
Styrene	3,263,688	Benzene Ethylene	Dehydrogenation
2,4-xylenol	NA	p-cresol Methylchloride	None

*SRI lists amounts in plant capacities. For this table, the capacities were multiplied by 0.8.

Source: Herrick et al. 1979a; SRI 1981.

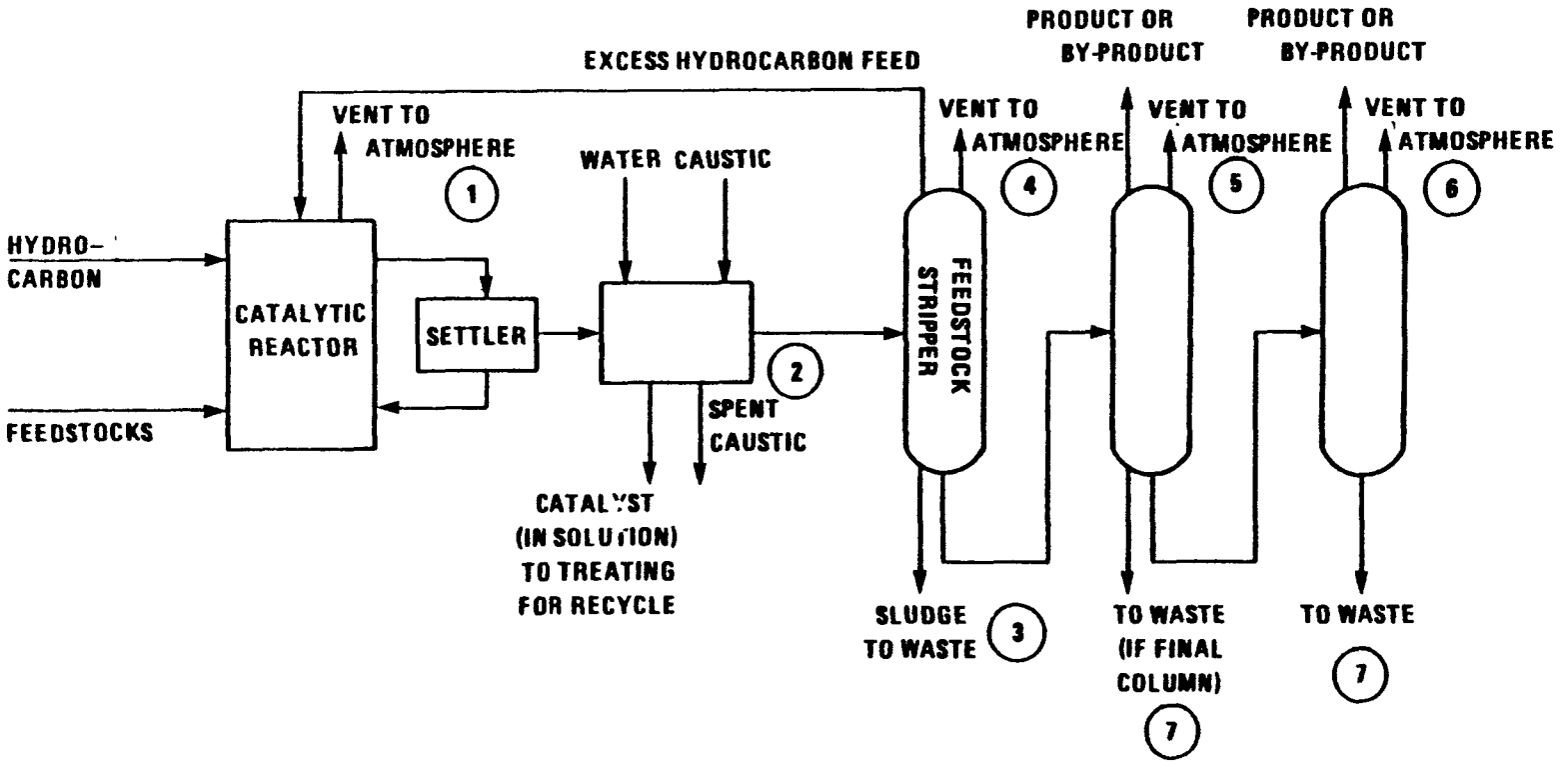

Figure 1. Generalized process flow diagram for manufacture of alkylated organic compounds. Source: White 1980a; Kirk-Othmer 1978.

2.0 AMINATION BY AMMONOLYSIS

The formation of amine by reacting ammonia with organic compounds is the process of amination by ammonolysis. Many products of amination, such as methylamines, ethylamines, aniline and ethyline diamines, are listed in Table 2 with their 1980 production amounts. A generalized process flow diagram of an amination by ammonolysis process is presented in Figure 2.

2.1 Description of Discharges

Basically, all amination processes produce the same type of emissions. Feedstock excess ammonia that does not get recycled is always a discharge to be considered. Organic feedstock that does not completely convert, approximately 1%, usually goes to waste and/or recycle. With a final yield of 95%, final product fugitive emissions and waste organic product from side reactions make up about 5% of the aminated products (Cocuzza et al. 1979, Habermann 1979, Klabunde 1979). Some of this may be recycled, but like the feedstocks, the exact amount that is emitted and does not get recycled is unknown. Also, solid catalyst fines are present in the wastewater of all amination processes except for ethanolamine and for ethylene diamine produced from ethylene dichloride, but the amount is unknown.

Specific releases from amination by ammonolysis processes are presented in Versar (1982).

3.0 AMMOXIDATION

Ammoxidation is a process in which nitriles are formed by the reaction of ammonia in the presence of air or oxygen with olefins, organic acids, or the alkyl group of alkylated aromatics. The major products made by ammoxidation processes are listed in Table 3 with their 1980 production amounts. Figure 3 presents a generalized process flow diagram for ammoxidation processes. More detailed explanations are provided in Versar (1982).

TABLE 2. AMINATION PRODUCTS AND THEIR MANUFACTURE IN 1980

Product	Amount (kkg)	Feedstock	Other Required Processes
Aniline	NA	Phenol	
Benzene sulfonamide	NA	Benzene sulfonyl chloride	
p-Chlorobenzene sulfonamide	NA	p-Chlorobenzene Sulfonyl chloride	
Dimethyl-formamide	NA	Dimethylamine Methyl formate	
Ethanolamines	194,138	Ethylene oxide	
Ethanolamines	NA	Ethanol	
Ethylenediamine	72,575*	Ethylene dichloride	
Ethylenediamine	NA	Monoethanolamine	
Hexamethyle-nediamine	145,150	Adipic acid	
Hexamethyle-netatramine	54,068	Formaldehyde	Condensation
Methylamines	134,989	Methanol	
Urea	2,580,759 (total)	Carbon dioxide	Dehydration

Source: Herrick et al. 1979a; SRI 1981.

*Feedstock not specified.

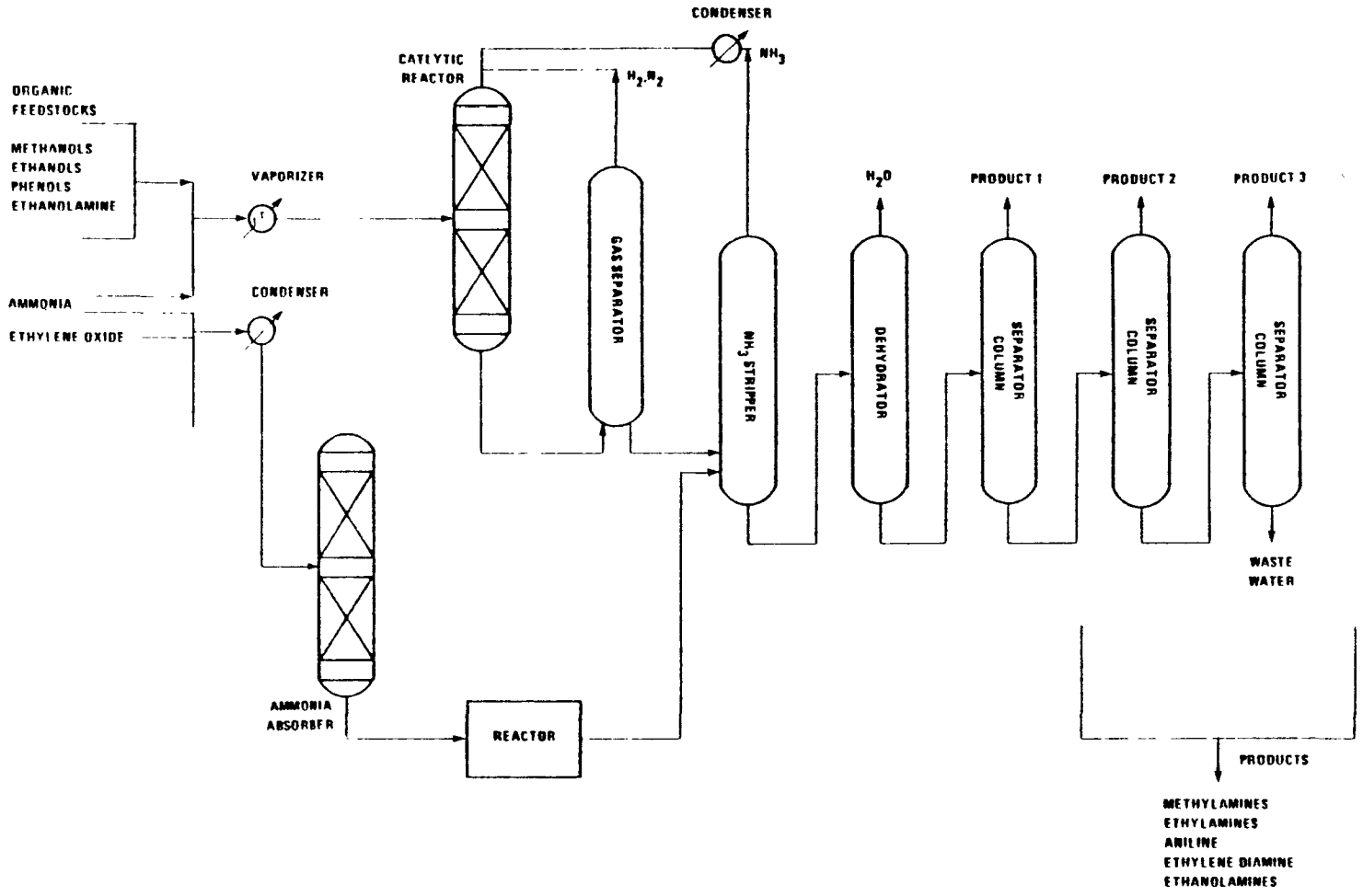

Figure 2. Generalized flow diagram of amination plant.
Source: Herrick et al. 1979b.

TABLE 3. AMMOXIDATION PRODUCTS AND THEIR MANUFACTURE IN 1980.

Product	Amount (kkg)	Feedstock	Other Required Processes
Acrylonitrile	760,221	propylene	
Adiponitrile	NA	adipic acid butadiene	 halogenation
Benzonitrile	NA	toluene	
Hydrogen cyanide	439,803	methane	
Isophthalonitrile	NA	n-xylene	
Phthalonitrile	NA	o-xylene	
Pyridine, beta-picoline	NA	acetaldehyde formaldehyde methanol	condensation
Terephthalonitrile	NA	p-xylene	

Source: Herrick et al. 1979a; SRI 1981.

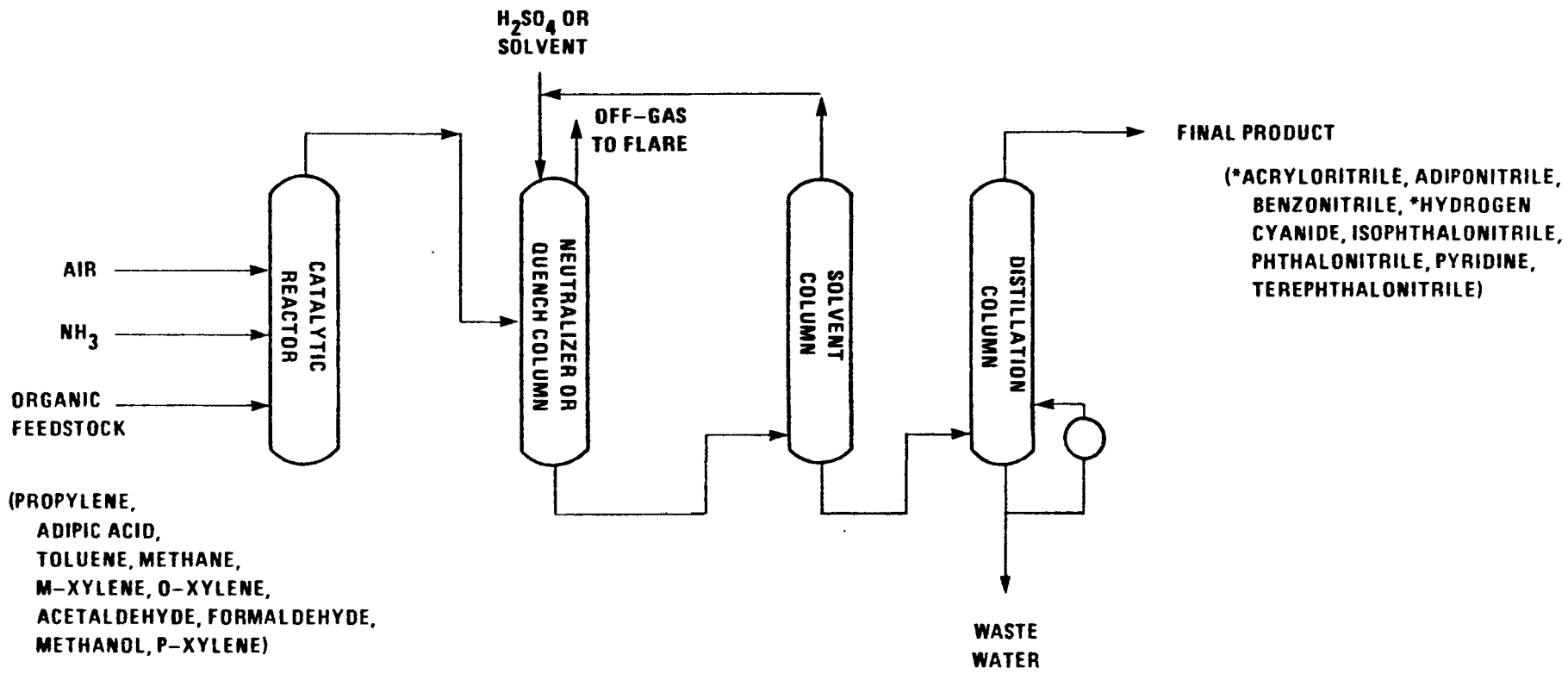

*ACRYLONITRILE AND HYDROGEN CYANIDE ARE NEUTRALIZED WITH H_2SO_4 FOLLOWING REACTION; OTHER PRODUCTS ARE QUENCHED WITH A SOLVENT

Figure 3. General ammoxidation process.

3.1 Description of Discharges

In addition to feedstocks and product emissions, the hydrocarbon solvent added to the quench column usually contributes to reaction emissions. In the case of hydrogen cyanide and acrylonitrile productions, sulfuric acid is added to neutralize; this and the resulting side reaction forming ammonium sulfate add to the pollutants from the reaction section. Products from side reactions are also present in emissions. Other nitriles besides the desired product are usually formed, with hydrogen cyanide the most common. Carbon monoxide, carbon dioxide, and nitrogen oxides are also produced and released as off-gases (lights). Most of the off-gases go to an incinerator of greater than 99% efficiency or to recycle (Hydrocarbon Processing 1973); however, there can be leaks. Antimony, molybdenum, or iron particles may be found in the final wastewater because the catalyst is usually an oxide of one or a combination of these metals (Barnett and Dewing, Doihyj et al., Hosler and Baillie, Norton and Bushick).

4.0 CARBONYLATION

Carbonylation, or the Oxo reaction, is the addition of carbon monoxide to an organic compound. Small carbonylic acids, alcohols, and aldehydes are prepared by carbonylation. These products are listed in Table 4 with their 1981 production amounts. Figure 4 is a flow diagram for a typical carbonylation process.

4.1 Description of Discharges

Releases from a carbonylation process will occur as fugitive and particulate gaseous emissions, liquid wastes, and solid residues. The major sources of contamination are gaseous emissions from the vents on the reactors which pull off the gaseous by-products and solid emissions resulting from the disposal of the bottoms product from the heavy ends distillation column.

Table 4. Carbonylation Products and Their Manufacture in 1980

t[1]	Amount kkg	Feedstock[1]	Other Required Processes[1]
acid	565,526[2]	Methanol Carbon Monoxide	None
s (C_7-C_{13})	NA[3]	Olefins Carbon Monoxide	None
ol/ aldehyde	413,681[4] 488,070[4]	Propylene Carbon Monoxide	Hydrogenation
crylate	NA[3]	Acetylene Ethanol Carbon Monoxide	None
hexanol/ alcohol	125,193[4] same as n-Butanol	Propylene Carbon Monoxide	Hydrogenation
raldehyde/ l alcohol	118,298[4] 98,340[4]	Propylene Carbon Monoxide	Hydrogenation
acid formate	27,216[4]	Carbon Monoxide Sodium Hydroxide	Hydrolysis
acid		Carbon Monoxide (Methanol Recycled)	Condensation Hydrolysis

: Herrick et al. 1979.
: SRI 1981.
Assumes 80% of capacity is produced.
Kirk-Othmer (1980) states that 34 to 37% of all acetic acid is manufactured by methanol carbonylation. This value is 35.5% of the total.
: SRI 1981.
Does not give amounts produced, but lists producers.
: SRI 1981.
Assumes that 80% of capacity is produced and also assumes that the amount produced was by carbonylation. Capacities may include corresponding iso- or n- compounds; for example, the amount of n-butyraldehyde produced may include iso-butyaldehyde.

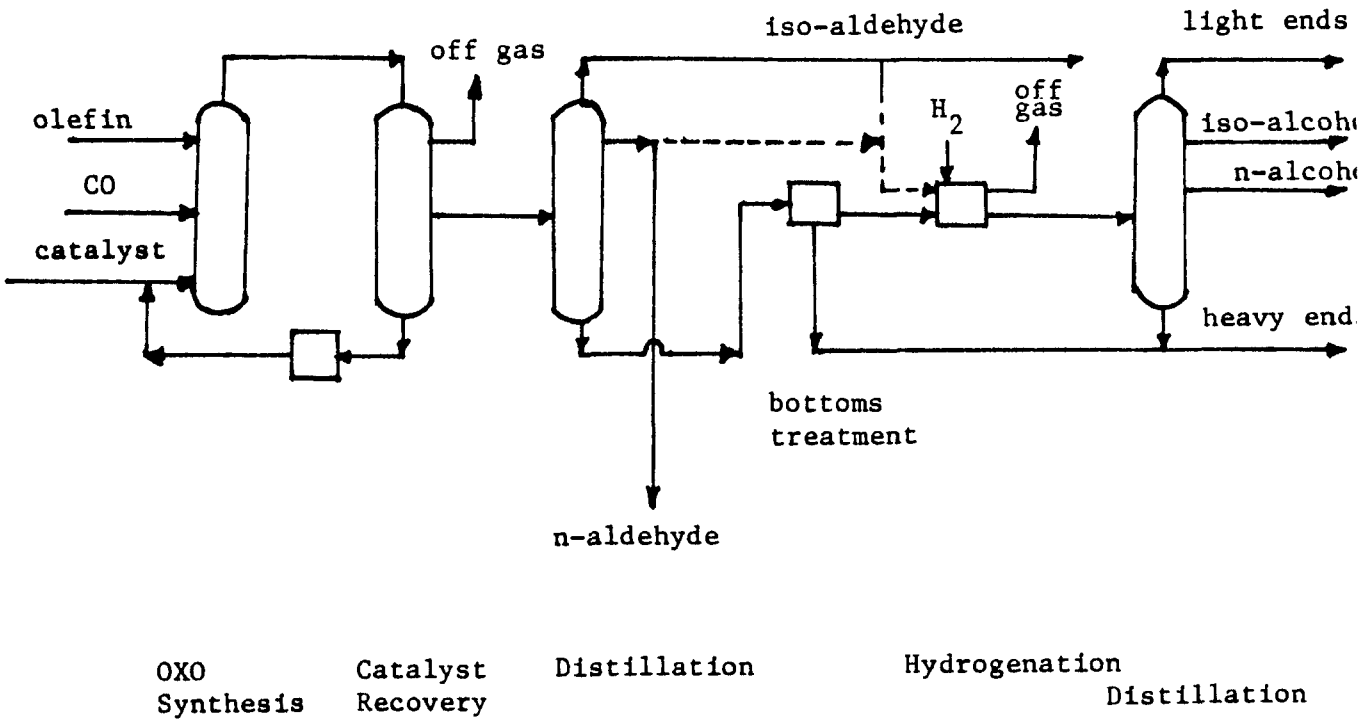

Figure 4. A typical carbonylation process.

Source: Adopted from Hydrocarbon Processing, 1973.

fugitive gaseous emissions	-	may occur from valves, flanges, pump seals, compressor seals, pressure relief valves, drains, and cooling towers.
compression	-	fugitive emissions will occur, especially at compressor seals.
	-	liquid wastes will result when flushing the compressors and when the oil used to grease the compressors leaks out.
carbonylation reactor	-	pollutants will be released from the off-gas vent on the reactor.
cooling and condensing	-	condensers, partial condensers, and heat exchangers cause contaminated liquid waste streams and vent off-gases.
purification	-	gas scrubbers, degassers, and water washes create large contaminated liquid waste streams and large gaseous waste streams.
product separation	-	distillation columns (both conventional and extractive distillation) cause fugitive and intermittent air emissions, solid bottoms products to be disposed, and contaminated liquid wastes containing products and extractive solvents.
steam generation and cooling tower operation	-	contaminants are released during operation and at blowdown.

All carbonylation reactions release volatile organic compounds (VOCs). VOCs include organic chemicals which, when emitted to the atmosphere, participate in photochemical reactions producing ozone. VOCs are emitted not only to the air, but also to the land and water.

Quantification of releases is presented in Versar (1982).

5.0 CONDENSATION

Condensation is the process where two or more organic chemicals combine to form a main product, usually with the separation of water or some other low-molecular-weight compound. Very diverse groups of organic chemicals are made from condensation reactions. Table 5 lists the 55 organic chemicals manufactured by condensation and figures for their production in 1980. Figure 5 shows a generalized flow diagram for a condensation process. Specific processes with their releases are discussed in Versar (1982).

5.1 Description of Discharges

Releases from a condensation process will occur as fugitive and particulate gaseous emissions, liquid wastes, and solid residues. The major sources of gaseous emissions are from the reactor by-product vents, the column vents on distillation columns, and releases during storage and handling. Since most condensation reactions yield water as a product of the reaction, a contaminated water stream will be discharged to wastewater treatment. Other liquid emissions will occur from disposal of spent scrubbing liquids and other solvents. Solid residues will result if a by-product of the reaction is a low molecular weight solid such as salt (NaCl), which is separated from the other products but contaminated to the same degree as the water of reaction. This solid product may be used elsewhere or disposed of. Another source of solid residues is the bottoms product of the heavy ends distillation column.

Volatile organic compounds (VOC) will be emitted since the condensation products and reactants are organic compounds. Volatile organic compounds (VOCs) have been defined by USEPA as organic compounds which, when emitted to the atmosphere, undergo photochemical reactions producing ozone. Most every organic chemical is a volatile organic compound (VOC). Also included as condensation products are pesticides. The emissions during their manufacture should be carefully monitored and controlled when possible.

TABLE 5. CONDENSATION PRODUCTS AND THEIR MANUFACTURE IN 1980

	Amount[1,2] (kkg)	Feedstock	Other Required Processes
inhydride	726,000[1]	Acetic acid	Pyrolysis
'c acid iobenzenearsonic acid)	NA[3]	Aniline Arsenic acid	None
sulfonyl chloride	NA[3]	Benzene Chlorosulfonic acid	None
(diphenyl)	26,400[2]	Benzene	Dehydrogenation
ıl A	330,200[1]	Acetone Phenol	None
chloride	NA[3]	Ethylene oxide Trimethylamine	Amination by ammonolysis Hydrohalogenation
dehyde alcohol aldehyde	NA[3]	Acetaldehyde	Hydrogenation
diphenyl- roethane -trichloro-2,2-bis- orophenyl) ethanel(DDT)	26,800[4]	Acetaldehyde Monochlorobenzene	Halogenation
lorophenoxyacetic- ,4-D)	5,800[2]	Monochloroacetic acid Phenol	Halogenation
lchlorophenoxy) lc acid (2,4-DP)	NA[3]	α-Chloropropionic acid 2,4-Dichlorophenol	Dehydrohalogenation
hlorophenylsulfone	NA	Monochlorobenzene Sulfur trioxide	None
amine	NA[3]	Aniline	None
guanidine	NA[3]	Aniline	None
henylhydrazine obenzene)	NA[3]	Cyanic acid Nitrobenzene	Hydrogenation
methane-4-4'- anate [(methylene- henylisocyanate)]	209,000[1]	Aniline Formaldehyde Phosgene	Phosgenation

Table 5. (Continued)

Product	Amount[1,2] (kkg)	Feedstock	Other Required Processes
Ethyl acetate	94,300[1]	Acetaldehyde	None
Ethyl carbonate	NA[3]	Ethylene oxide Carbon dioxide	None
Ethylene glycol ethers	555,000[5]	Alkyl alcohols Ethylene glycol	None
Ethylene glycol monoethyl ether		Ethylene oxide Ethanol	None
Ethyl ether (diethyl ether)	23,200[1]	Ethanol	None
2-Ethylhexanol	125,200[1]	Acetaldehyde Butyraldehyde	Hydrogenation
Ethyl parathion (parathion)	NA[3]	0,0-Dimethyl phosphoro-Thionochloridate Sodium nitrophenoxide	Halogenation
Formic acid	27,200[1]	Carbon monoxide (methanol recycled)	Carbonylation Hydrolysis
Heptenes	54,400[1]	Butylenes Propylene	None
Hexamethylenetetramine	54,000[1]	Ammonia Formaldehyde	Amination by ammonoly
Isophorone	NA[3]	Acetone	None
Isoprene (2-methyl-1,3-butadiene)	143,300[1]	Propylene	Cracking
Isoprene		Acetone Acetylene	Dehydration Hydrogenation
Isoprene		Formaldehyde Isobutylene	Cracking
Isoprene		Formaldehyde Hydrogen chloride Isobutylene	Hydrohalogenation Pyrolysis

Table 5. (Continued)

	Amount[1,2] (kkg)	Feedstock	Other Required Processes
pyl-N'-phenyl- lenediamine	NA[3]	Acetone Aniline p-Chloronitrobenzene	Alkylation Dehydrohalogenation Hydrogenation
}	54,400[1]	Dicyandiamide Urea	Pyrolysis Pyrolysis
oxide	NA[3]	Acetone	Dehydration
onine	NA[3]	Acrolein Cyanic acid Methyl mercaptan	Hydrogenation
-2-butanol yl alcohol)	NA[3]	Acetone Acetylene	Hydrogenation
-3-butyn-2-ol	NA[3]	Acetone Acetylene	None
-4-chlorophenoxy- cid (MCPA)	NA[3]	o-Cresol Monochloroacetic acid	Halogenation
yl-4-chlorophenoxy) c acid (MCPP)	NA[3]	α-Chloropropionic acid	Dehydrohalogenation
5-ethylpyridine (MEP) -2-picoline)	NA[3]	Acetaldehyde Ammonia	Amination by ammonolysis
obutyl ketone	83,800[1]	Acetone Hydrogen	Dehydration Hydrogenation
rathion (0,0-dimethyl ophenyl phosphoro-	23,200[4]	0,0-Almethyl phosthiono- chloridate Sodium p-nitrophenoxide	Halogenation
1-pentene	NA[3]	Propylene	None
2-naphthylamine	NA[3]	Aniline 2-naphthol	None

Table 5. (Continued)

Product	Amount[1,2] (kkg)	Feedstock	Other Required Processes
Oxalic acid	NA[3]	Sodium formate	Pyrolysis
Pentaerythritol	64,600[1]	Acetaldehyde Formaldehyde	Cannizzaro reaction
p-Phenylphenol (4-hydroxydiphenyl)	NA[3]	Benzene Cyclohexanone	Dehydrogenation
Polyethylene terephthalate	435,400[1]	Dimethyl terephthalate Ethylene glycol	Polymerization
beta-Propiolactone	NA	Formaldehyde Ketone	None
Propylene carbonate	NA[3]	Carbon dioxide Propylene oxide	None
Pyridine beta-Picoline	21,800[1]	Acetaldehyde Formaldehyde Methanol	Ammoxidation
Tetrahydrofuran, 2,3,4,5-tetracarboxylic dianhydride	57,300[1]	Furan Maleic anhydride	Oxidation
Tetramethylthiuram disulfide (thiram) [bis(dimethylthiocarbamoyl)- disulfide]	NA[3]	Ammonia Carbon disulfide Dimethylamine Hydrogen peroxide	Oxidation
2,4,5-Trichlorophenoxyacetic acid (2,4,5-T)	6,600[4]	Acetic acid 2,4,5-Trichlorophenol	Halogenation
Zineb (zinc ethylenebisdithio- carbamate)	800[2]	Carbon disulfide Ethylene diamine Zinc sulfate	None

Table 5. (Continued)

	Amount[1,2] (kkg)	Feedstock	Other Required Processes
methyldithio- ate)	1,700[2]	Carbon disulfide Dimethylamine Zinc sulfate	None

Herrick et al. 1979a.

SRI 1981. Assume 80% of capacity is produced and also assume that the amount produced was by condensation.

USITC 1979.

SRI 1981. Does not give amounts produced, but lists producers.

USITC 1975.

White 1980b. Most of the 555,000 kkg were produced by a different reaction - the reaction of ylene oxide oxide and alcohols.

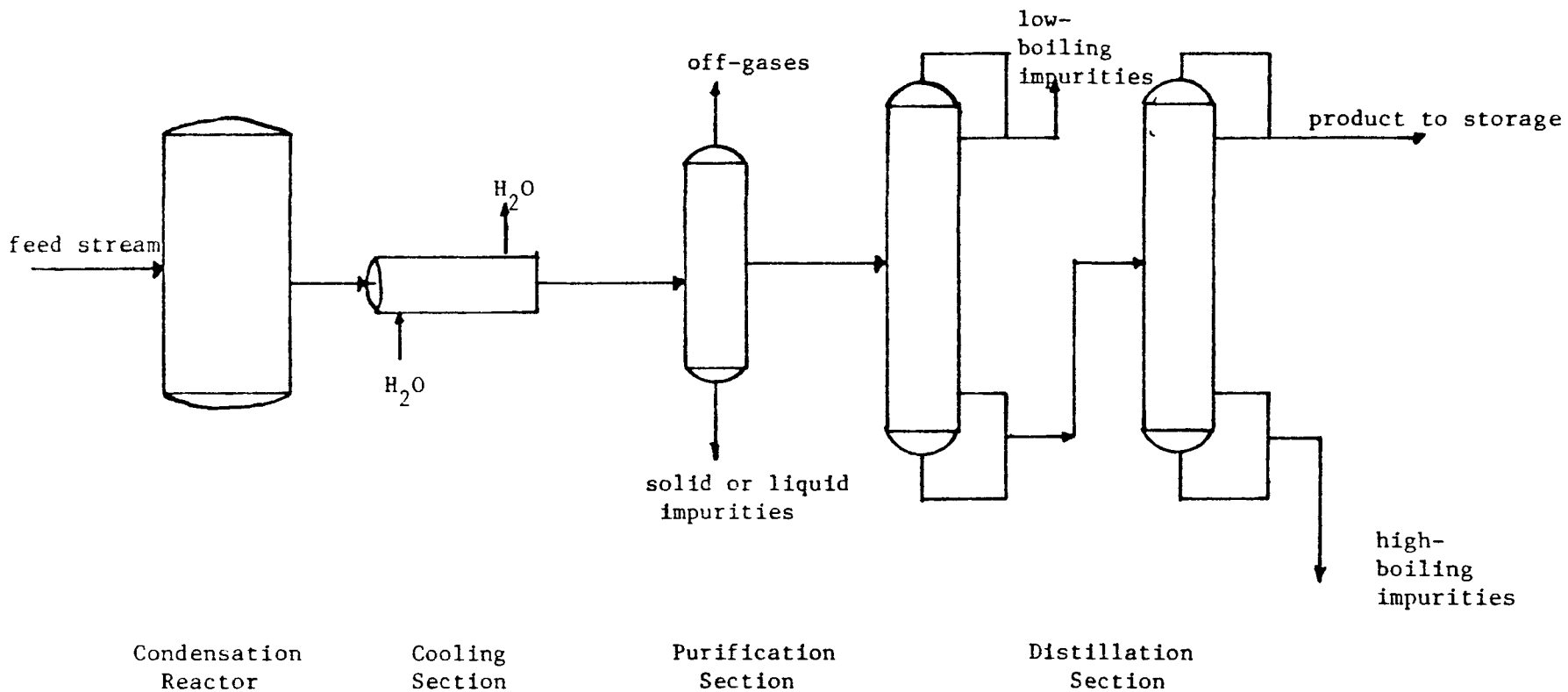

Figure 5. A generalized flow diagram of a condensation process.

fugitive gaseous emissions	-	may occur from valves, flanges, pump seals, compressor seals, pressure relief valves, drains, and cooling towers.
Preheating the reactants	-	if steam evaporators or heat exchangers are used, the steam will become contaminated.
Furnaces	-	the combustion gases will be contaminated with incomplete combustion product and oxides of nitrogen (NO_x).
	-	hydrocarbon and coke particulate emissions will occur when decoking the furnace.
Reactors	-	fugitive emissions will occur from reactors when the catalysts or packing are regenerated; this will create an intermittent gaseous or liquid waste stream.
Product cooling	-	quench waters or solvents will become contaminated because they come in direct contact with the products.
Product purification	-	if centrifuges are used, absorbers and caustic and water scrubbers will have contaminated liquid waste streams.
steam generation and cooling tower operation	-	contaminants are released during operation and at blowdown.

6.0 CATALYTIC CRACKING

Catalytic cracking is the thermal decomposition of an organic compound in the presence of a catalyst and in the absence of air. The process is mainly used to create gasoline, C_3-C_4 olefins, and isobutane by selective decomposition of heavy distillates. Chemicals that are produced by catalytic cracking other than gasoline are listed in Table 6. A typical flow diagram for the catalytic cracking process is given in Figure 6.

TABLE 6. CATALYTIC CRACKING PRODUCTS[1] AND THEIR MANUFACTURE IN 1979[2]

Product	Amount (kkg)	Feedstock	Other Processes Required
Isoprene	248,561[3]	propylene	condensation
Isoprene	NA	amylenes	none
Isoprene	NA	isobutylene and formaldehyde	condensation
Perchloroethylene and trichloroethylene	NA	ethylene dichloride	halogenation
Perchloroethylene and trichloroethylene	NA	acetylene	halogenation
Perchloroethylene and trichloroethylene	350,640	any C_2 chlorocarbon	halogenation
Vinyl chloride monomer	108,862[4]	acetylene	halogenation
Vinyl chloride monomer	254,012[4]	ethylene	halogenation
Vinyl chloride monomer	NA	naptha	dehydrohalogenation halogenation oxyhalogenation
Vinyl chloride monomer	1,823,440[4]	ethylene	halogenation oxyhalogenation

Sources:

[1]Herrick et al. 1979a.
[2]USITC 1979.
[3]Total production from all manufacturing processes.
[4]SRI 1981. Assumed 80% of nameplate capacity.
NA - Not available.

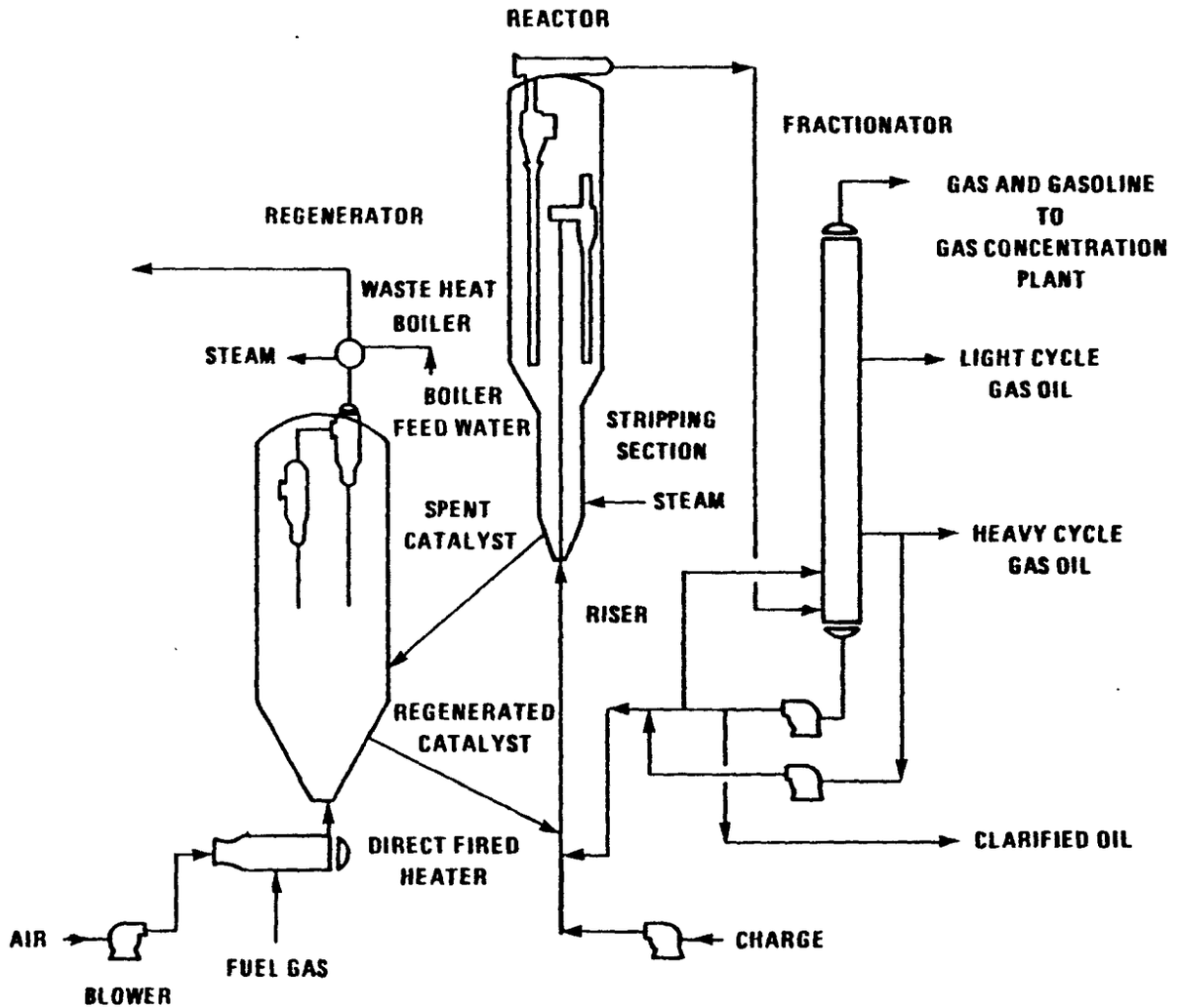

Figure 6. A typical flow diagram for fluid catalytic cracking.

6.1 Description of Discharges

Releases from a typical catalytic cracking process will result as fugitive emissions from pressure relief valves, vents, seals, and equipment leaks. Catalyst regeneration causes intermittent emission of carbon dioxide, carbon monoxide, and coke and catalyst fines. It is assumed that spent catalyst is landfilled. Other discharges are discussed in the dehydrohalogenation and the dehydrogenation sections.

7.0 DEHYDRATION

The dehydration process involves the production of alkenes from alcohols by the elimination of a molecule of water. Dehydration products, including ethylene, are listed in Table 7. Production for 1980 could not be determined from the available literature. Figure 7 presents the generalized process flow diagram for a dehydration process.

7.1 Description of Discharges

Dehydration is part of some major manufacturing processes such as those for urea, isoprene, methyl isobutyl ketone, and mesityl oxide. An extensive literature search and a telephone conversation with E.C. Herrick (September 22, 1981) revealed that dehydration is not used as an independent process in the United States. A process such as ethylene manufacture from ethanol is used in countries with abundant fermentation materials but limited hydrocarbon resources (Kirk-Othmer 1980). Because dehydration is not common as an independent process, no emission data were available.

Specific release values are identified in Versar (1982).

8.0 DEHYDROGENATION

The process of dehydrogenation is a chemical reaction whereby the reactants lose hydrogen. The organic chemical classes concerned are (1) aldehydes, (2) ketones, which are prepared by dehydrogenating alcohols, and (3) olefins, which are prepared from their saturated hydrocarbons.

TABLE 7. DEHYDRATION PRODUCTS

Product	Feedstock	Other Required Processes
Ethylene	Ethyl alcohol	None
Isoprene (2-Methyl-1, 3-butadiene)	Acetone Acetylene	Condensation Hydrogenation
Mesityl oxide (isopropylidene acetone)	Acetone	Condensation
Methyl isobutyl ketone	Acetone Hydrogen	Condensation Hydrogenation
Morpholine	Diethanolamine	None
Urea	Ammonia CO_2	Amination

Source: Herrick et al. 1979a.

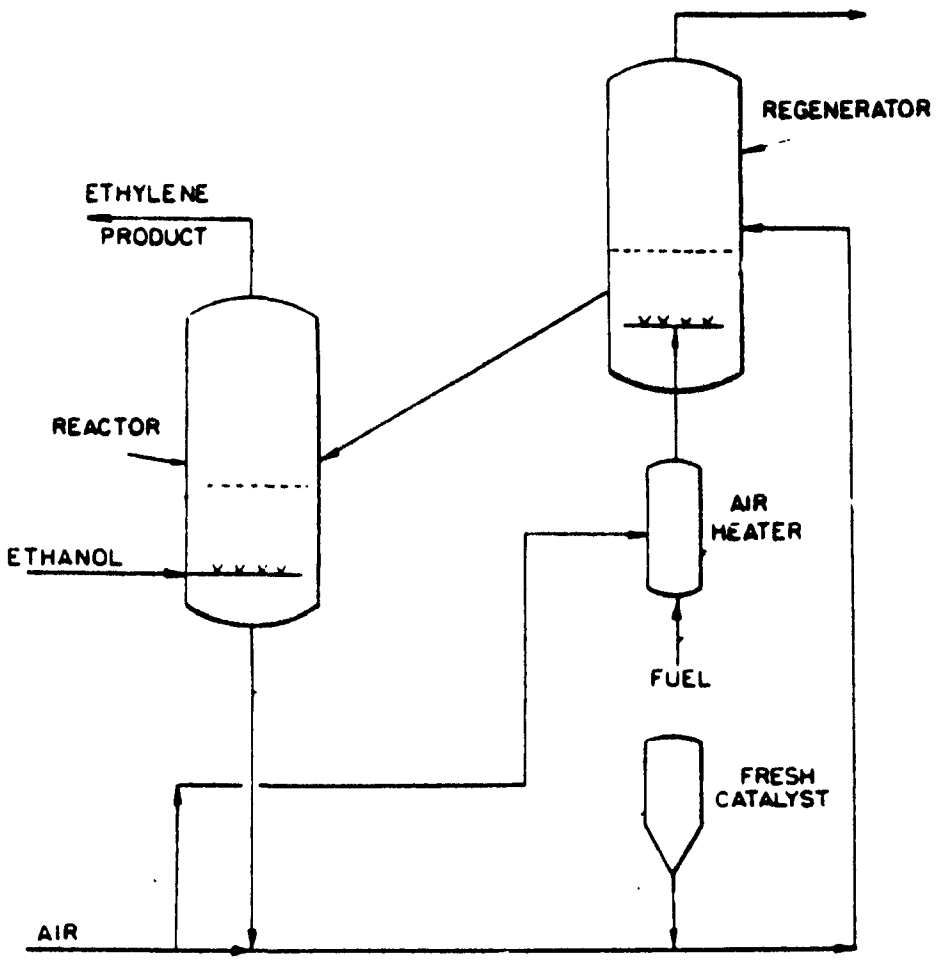

Figure 7. Proposed ethanol manufacturing process by dehydration of ethanol

Source: U.S. Patent.

Table 8 lists the organic chemicals that are manufactured by dehydrogenation (Herrick et al. 1979a). A typical dehydrogenation process diagram is presented in Figure 8.

8.1 Description of Discharges

fugitive emissions	- occur from valves, flanges, pump seals, compressor seals, pressure relief valves, drains and cooling towers.
dehydrogenation section	- pollutants are released when regenerating and purging the catalyst beds as air emissions, wastewater, and spent catalysts. Also air emissions occur from leaks in the reactors.
product cooling	- using condensers, partial condensers and oil quenches results in contaminated liquid waste streams and vent gases.
product purification	- using caustic scrubbers, degasser and water washes results in contaminated liquid waste streams.
product separation	- absorbers, strippers and fractionating columns (both extractive and conventional distillation) result in fugitive and intermittent air emissions, solid tarry matter in bottoms at blowdown, contaminated liquid wastes containing products, and extractive solvents.
steam generation	- contaminants released during operation and at cooling towers blowdown.

Quantification of releases is presented in Versar (1982).

9.0 DEHYDROHALOGENATION

In the process of dehydrohalogenation, a hydrogen atom and a halogen atom are removed from one or more feedstocks to obtain a new chemical. In commercial operation, the halogen atom is usually chlorine. A typical dehydrohalogenation train includes a reactor and a purification system. Figure 9 is a typical process flow diagram. The principal organic chemicals manufactured by dehydrohalogenation are listed in Table 9.

TABLE 8. ORGANIC CHEMICALS MANUFACTURED BY DEHYDROGENATION

Product	Amount (kkg)	Feedstock	Other Required Processes
Acetaldehyde	-	Ethyl alcohol	None
Acetone	-	Isopropyl alcohol	None
Linear alkyl benzenes	102.3	Benzenes Linear paraffin	Alkylation
Biphenyl	26.4	Benzene	Condensation
Butadiene	325.0	n-Butane	None
Butadiene		Butene-1 Butene-2	None
Cyclohexanone	396.9	Cyclohexanol/cyclohexane	None
2-isoamylene	-	Isopentane	None
Isoprene	248.6	Isopentane	None
Isoprene		Tertiary amylenes	None
Methyl ethyl ketone	-	Butene-1 Butene-2	Hydrolysis
Methyl ethyl ketone		sec-Butyl alcohol	None
Phenol	Insignificant amts.	Cyclohexane	Ammoxidation
p-Phenyl phenol	-	Benzene Cyclohexane	Condensation
Piperylene	-	n-Pentene	None
Propylene	6440.4	Propane	None
Styrene	3394.8	Benzene Ethylene	Alkylation
Styrene		Ethylbenzene	None
Xylenes, mixed	-	Naphtha	None

Source: Herrick et al. 1979a; SRI 1979a.

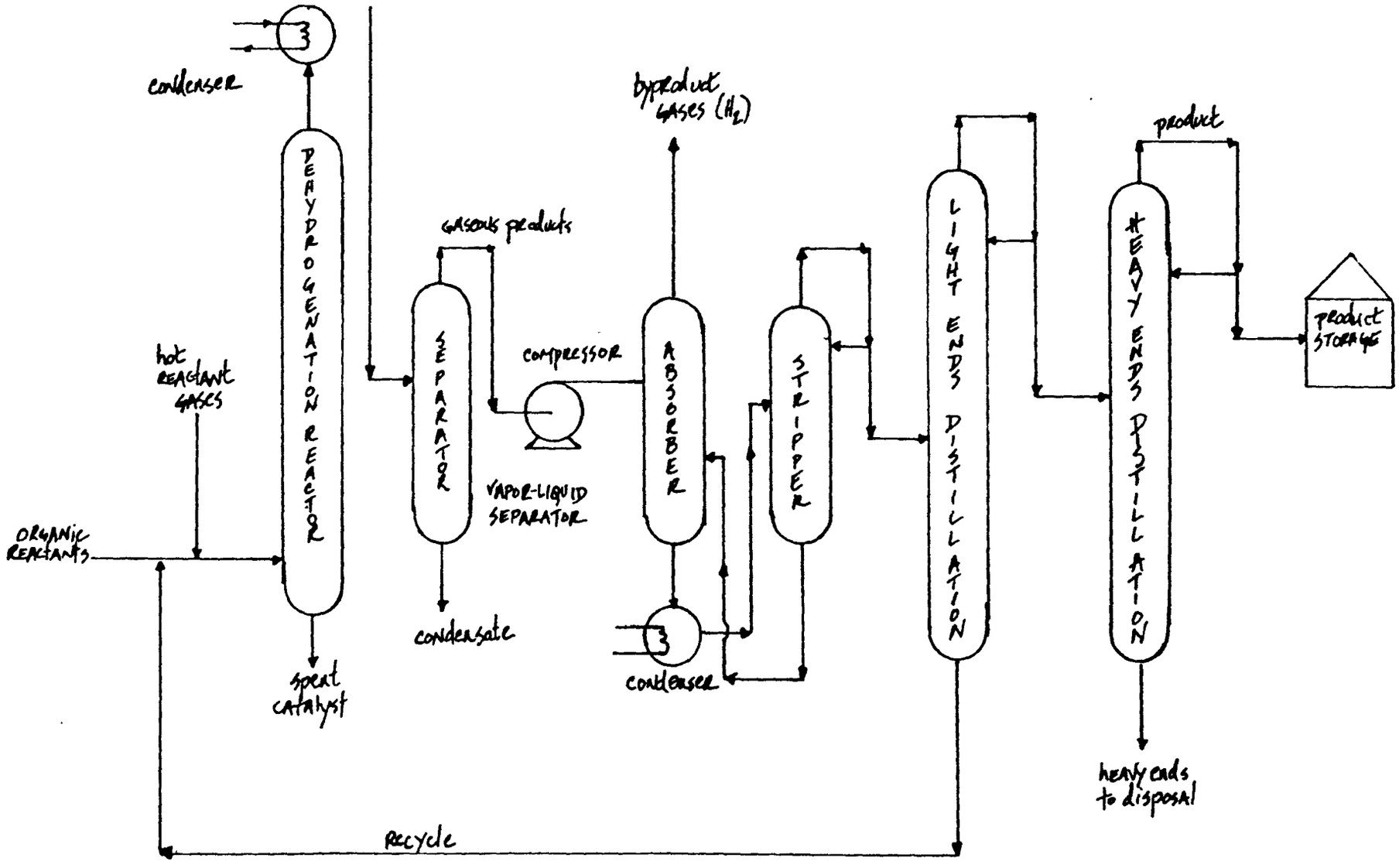

Figure 8. Typical dehydrogenation process.

Source: Hydrocarbon Processing, 1973.

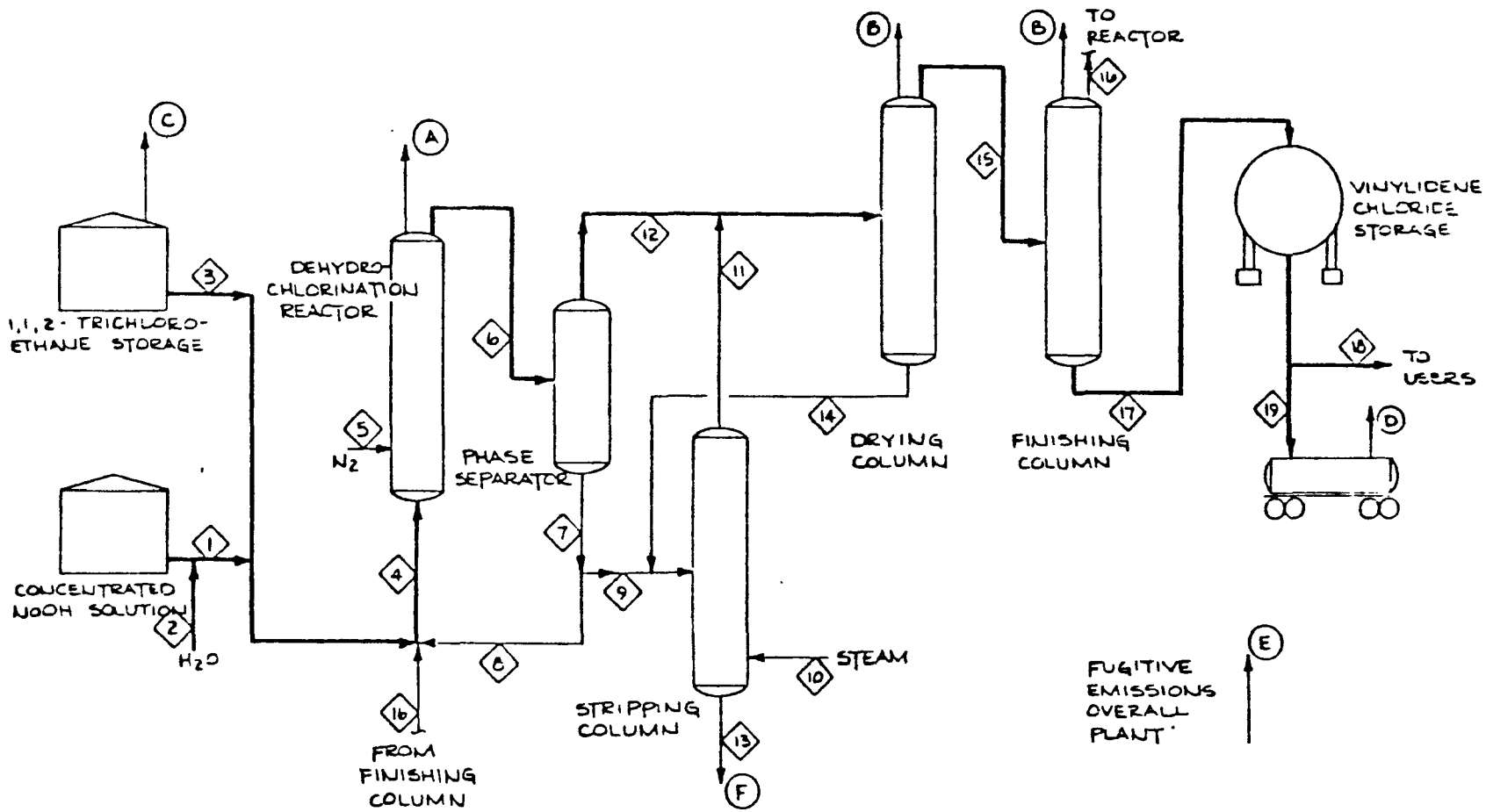

Figure 9. Flow diagram for vinylidene chloride from 1,1,2-trichloroethane.

TABLE 9. DEHYDROHALOGENATION PRODUCTS AND THEIR PRODUCTION IN 1979[1,2]

	Amount (kkg)	Feedstock	Other Required Processes
chlorophenoxy) ıic acid (2,4-DP)	NA	α-chloropropionic acid (2,4-Dichlorophenol)	condensation
ıyl-N'-phenyl-p- ınediamine	28,436*	acetone aniline p-chloronitrobenzene	alkylation condensation hydrogenation
ıyl-4-chlorophenoxy) ıic acid (MCPP)	NA	α-chloropropionic acid; 4-chlorocresol	condensation
ınate resins	127,800[3]	bisphenol A phosgene	phosgenation polymerization
oride monomer (VCM)	2,925,000[4]	acetylene ethane chlorine	halogenation oxyhalogenation
oride monomer (VCM)	2,925,000[4]	ethylene chlorine	halogenation oxyhalogenation
oride monomer (VCM) chloride	2,925,000[4]	ethylene dichloride	none
oride monomer (VCM)	2,925,000[4]	naphtha chlorine	halogenation oxyhalogenation
ıe chloride	98,000[5]	vinyl chloride	halogenation

[1]Herrick 1979.
[2]USITC 1979.
[3]SRI 1981, 80% of January 1, 1981 capacity.
[4]Chemical & Engineering News, August 3, 1981, 1980 production.
[5]IT Enviroscience 1980, 80% of 1979 reported capacity.

ı all substituted p-phenylenediamine.

ehydrohalogenation is not always the major method of production of these chemicals.

9.1 Description of Discharges

Releases from a typical dehydrohalogenation process occur as fugitive emissions, as reactor off-gases, as column wastes, as catalyst recovery residue, and as storage and handling emissions.

Fugitive	-	pressure relief valves, pump seals, compressor seals, drains, and cooling towers.
Process	-	reactor off-gases.
Purification	-	column vents, column waste streams, filter residue, and catalyst recovery residue.
Storage and Handling	-	vents from feed tanks, product tanks, and loading.

A quantification of releases from dehydrohalogenation is presented in Versar (1982).

10. ESTERIFICATION

A carboxylic acid is converted into an ester when heated with an alcohol in the presence of a mineral acid, such as sulfuric acid or hydrogen chloride. The process, called esterification, can be batch on continuous, liquid- or vapor-phase. Organic chemicals manufactured by esterification and their amounts produced in 1980 are listed in Table 10. Figure 10 describes a general process flow diagram of an esterification process.

10.1 Description of Discharges

Releases from an esterification process will occur as fugitive and particulate gaseous emissions, liquid wastes, and solid residues. The major sources of contamination are (1) gaseous emissions from the vents on feed tanks and purification columns which pull off excess feedstock and by-products and (2) liquid emissions in waste streams from the reactor and purification column continuing excess feedstock, catalyst, and by-products.

TABLE 10. ESTERIFICATION PRODUCTS

Product	Amount*	Feedstock	Other Required Processes
Acrylic acid & acrylate esters	714,136	propylene alcohols	oxidation
n-Butyl acetate	63,503	acetic acid n-butyl alcohol	
n-Butylbenzyl phthalate	NA	benzyl alcohol n-butyl alcohol phthalic anhydride	
Di-n-butyl phthalate	NA	n-butyl alcohol phthalate anhydride	
Diethyl phthalate	NA	ethyl alcohol phthalic anhydride	
Diheptyl phthalate	NA	heptyl alcohol phthalic anhydride	
Diisodecyl phthalate	NA	isodecyl alcohol phthalic anhydride	
Dimethyl phthalate	NA	methyl alcohol phthalic anhydride	
Dimethyl terephthalate Dimethyl terephthalate	1,542,214 (feedstock not specified)	methyl alcohol terephthalic acid methyl alcohol p-xylene	oxidation
Di-n-octyl phthalate	NA	phthalic anhydride n-octyl alcohol	
Dioctylphthalate (2-ethylhexyl phthalate)	NA	2-ethylhexyl alcohol phthalic anhydride	

Table 10. (Continued)

Product	Amount *	Feedstock	Other Required Processes
Ethyl acetate	94,347	acetic acid ethyl alcohol	
Ethyl acetoacetate	NA	acetic acid	pyrolysis
Ethyl acrylate	NA	ethyl alcohol	oxidation
Isopropyl acetate	19,958	acetic acid isopropyl alcohol	
Methyl acetate	NA	acetic acid methyl alcohol	
Methyl acetonacetate	NA	acetic acid	pyrolysis
Methyl methacrylate	413,676	acetone hydrogen cyanide methyl alcohol	hydrocyanation hydrolysis sulfonation
Methyl methacrylate	NA	isobutylene methyl alcohol	oxidation
p-Oxybenzoic acid α p-Oxybenzoic butyrate	NA	butyl alcohol carbon dioxide phenol	carboxylation
Polyethylene terephthalate	257,640 (barrier resins) 177,808 (film)	ethylene glycol terephthalic acid	polymerization
Triacetate polymer (cellulose triacetate)	NA	acetic acid cellulose	
Tributyrin (glyceral tributyrate)	NA	n-butyric acid α glycerol	

Source: SRI 1981; Herrick et al. 1979.

*SRI lists amounts in plant capacities. For this table, the capacities were multiplied by 0.8.

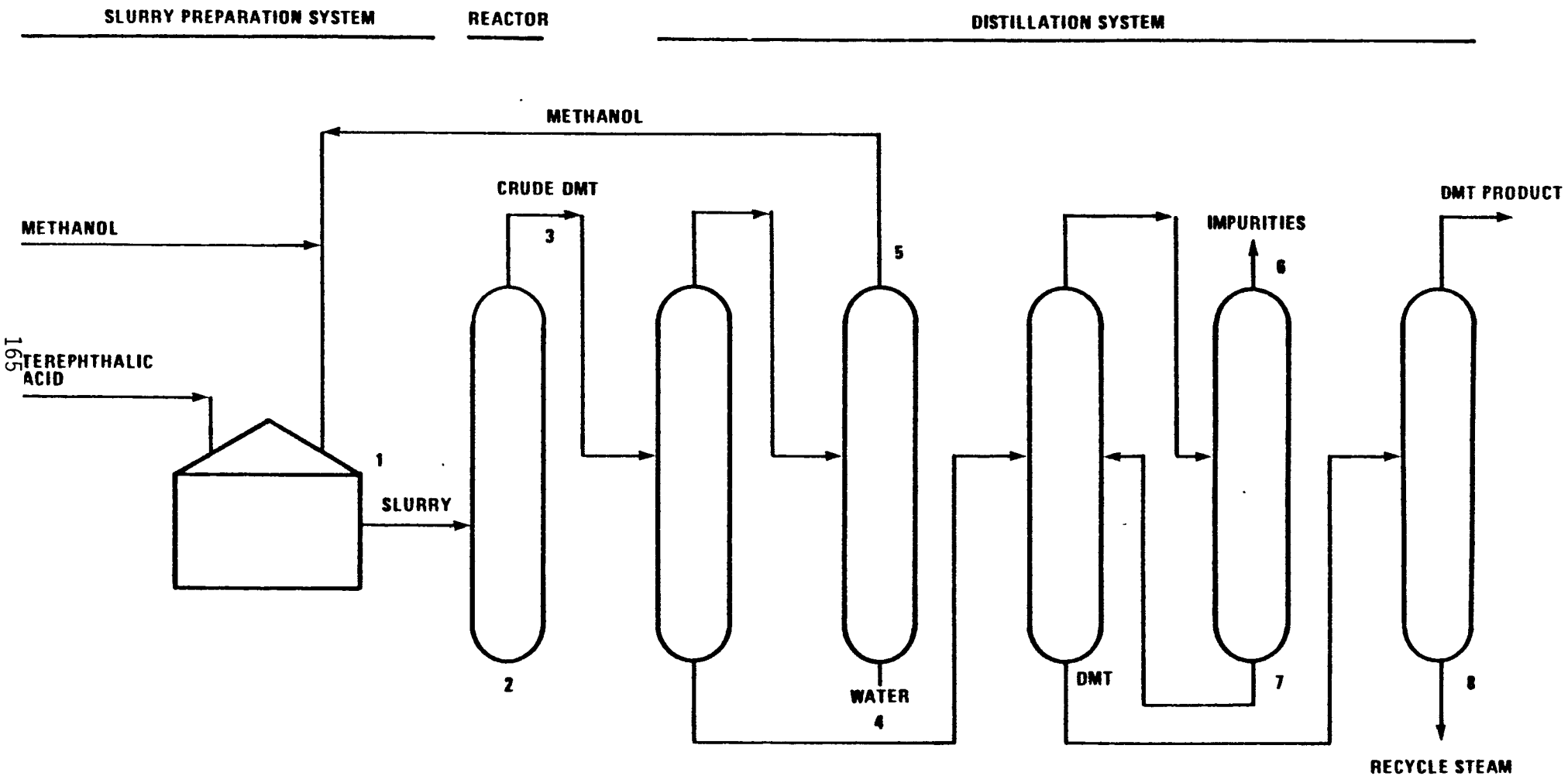

Figure 10. Manufacture of dimethyl terephthalate by esterification.

Fugitive gaseous emissions	- may occur from valves, pump seals, compressor seals, pressure relief valves, and drains.
Feed tank	- gaseous excess feedstock will be released through a vent on the mix tank.
Purification column	- excess feedstock and by-products are released through vents in the gaseous form, and in the liquid form they are washed out in a waste stream along with catalyst fines.
Heavy ends column	- a sludge containing by-products, catalyst fines, and additives is removed from the heavy ends column to waste disposal (usually a landfill).

11.0 HALOGENATION

Halogenation is the process of reacting a hydrocarbon with a halogen gas. Direct chlorination to form chlorocarbons is the most widely used halogenation process. Table 11 lists major halogenation products and their 1980 manufacture. Manufacture of halocarbons by direct halogenation involves three basic steps: (1) halogenation, (2) absorption, and (3) separation (Figure 11).

11.1 Description of Discharges

Among the discharges, fugitive and routine, the feedstock hydrocarbons and chlorine are usually present. The product halocarbon is emitted at most discharge points, along with heavier and lighter halogenated hydrocarbon by-products. The heavies produced are mostly drawn off in the final wastewater of the distillation column(s). Hydrogen chloride, which is generated during halogenation, is among the emissions from the HCl scrubber. If a neutralizer is employed in the process, excess sodium hydroxide and sodium chloride by-product are exited in the bottoms of the neutralizer column or drawn off from a filter. Tars and carbon solids are present in the final distillation column bottoms waste, and if a catalyst is used, catalyst fines such as mercuric chloride or antimony trichloride will also be present.

Product	Amount (kkg)	Feedstock	Product	Amount	Feedstock
Benzyl chloride	59,874	Toluene	Propylene oxide	533,425	Propylene, tert-butyl alcohol, and chlorine
Carbon tetrachloride	72,574	Carbon disulfide			
	197,040	Methane	1,1,1-Trichloroethane	473,550	Ethylene or vinyl chloride
Chloroacetic acid	35,925	Acetic acid			
Chlorobenzene	228,610	Benzene	VCM	4,762,720	Ethylene-oxyhalogenation
Chloroform	186,880	Methanol		304,814	Ethylene
Dichlorobenzene	39,190	Benzene			
p-Dichlorobenzene	54,068	Benzene			
Ethylene dichloride	6,377,509	Ethylene			
Fluorocarbons	3,661,398	Carbon tetrachloride or methane Hydrofluoric acid			
Methyl chloride	272,155	Methanol			
Methylene chloride	174,179	Methanol			
	72,574	Methane			
	47,174	Methane and methanol			
Perchloroethylene	433,634	Ethylene dichloride or acetylene			
Phosgene	687,646	Carbon monoxide			

Source: Herrick et al. 1979a and SRI 1981.

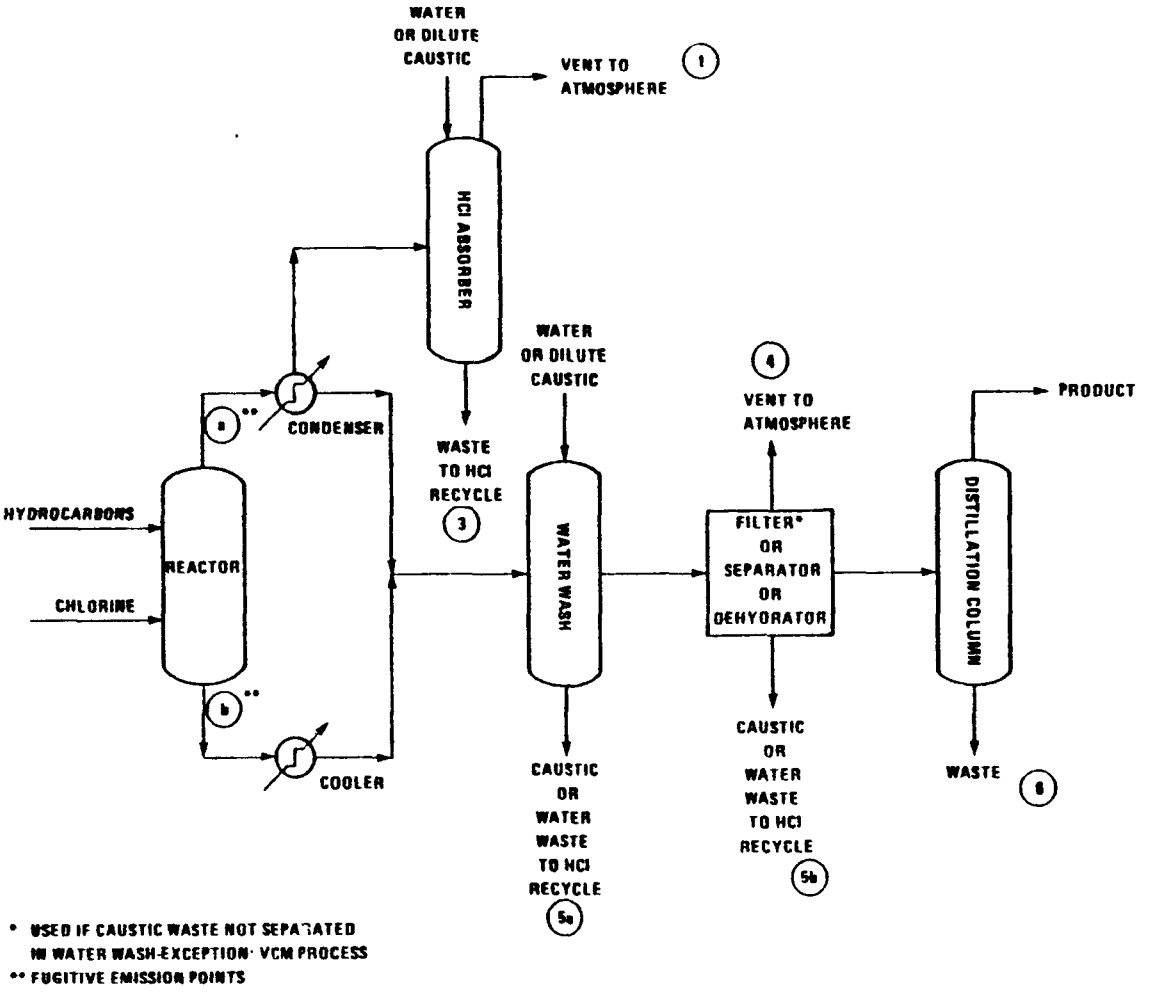

Figure 11. Halogenation of Hydrocarbon.

Source: Kahn and Hughes 1979.

Quantification of releases from halogenation processes is found in Versar (1982).

12.0 HYDRODEALKYLATION

Hydrodealkylation is the process by which a methyl or larger alkyl groups are removed from hydrocarbon molecules and replaced by hydrogen atoms. Benzene and naphthalene are produced by this process. Table 12 presents the chemicals produced, other processes required, and the feedstock required for the hydrodealkylation process. Figure 12 is a flow diagram for benzene production by the hydrodealkylation process.

12.1 Description of Discharges

Descriptions of discharges are provided for the two major alkylation manufacturing processes, i.e., benzene and naphthalene.

12.1.1 Benzene

Waste streams originate from periodic catalyst regeneration, fugitive emissions from valves and pump seals, discarding spent clay, operating power generation and cooling water systems, gas compressors, and process heaters. Catalyst regeneration in the Detol Process involves occasional burning of coke deposits in a preheated inert gas with controlled quantities of air. Descriptions of the Hydeal process indicate that about 1% of aromatics in the feed may be converted to heavy aromatics such as biphenyl, methyl biphenyls, and fluorene through condensation of aromatic nuclei. These heavy aromatics will most likely be found in the waste stream.

12.1.2 Napthalene

Fugitive emissions of hydrocarbons to the air are expected from distillation units, vents, pumps, seals, and flanges. For processes which use catalysts, catalyst decoking operations can be expected to release particulates, sulfur oxides, and carbon monoxides to the atmosphere. Atmospheric emissions are also expected from process heaters and cooling water treatment.

TABLE 12. ORGANIC CHEMICALS MANUFACTURED BY HYDRODEALKYLATION

Other Processes Required	Product	Feedstock	Amount kkg for 1979
None	Benzene Light hydrocarbon	Aromatic mixtures Hydrogen	NA
None	Benzene	Coke oven light oil	NA
None	Benzene	Toluene	1,498,400
None	Benzene	Xylenes (mixed)	NA
None	Napthalene	Alkylnapthalenes	74,102

Source: Herrick et al. 1979a.

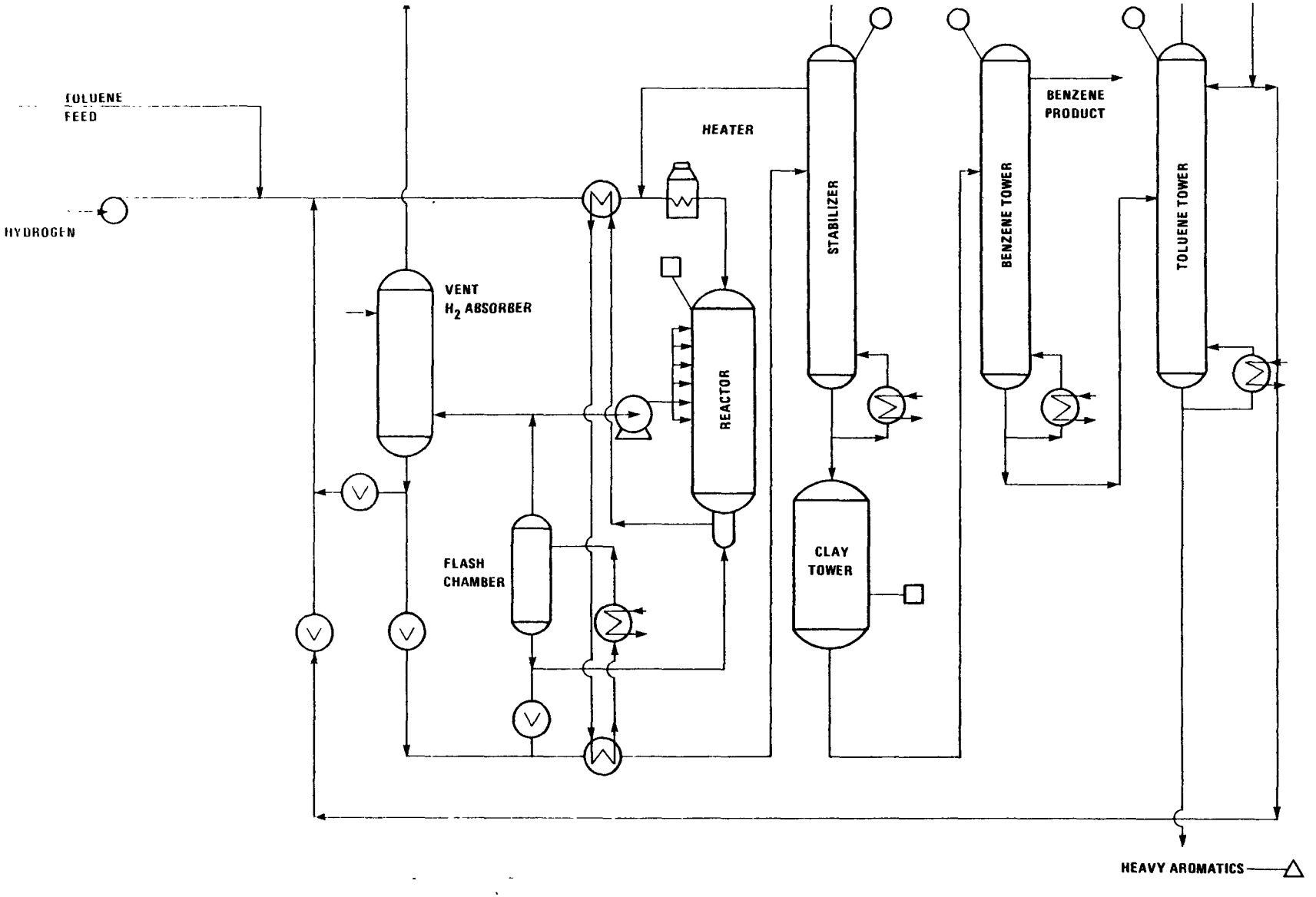

Figure 12. Benzene production by hydrodealkylation.

NOMENCLATURE: ○ GASEOUS EMISSIONS
□ SOLID WASTE
△ LIQUID WASTE

Source: Ehrlich and Chazanow 1973.

Solid waste consists of spent catalyst and acid treated clay used in purification. The usual method of disposal is by landfill. It is possible that some of the sorbed materials are toxic and could be mobilized into the environment by leaching of the landfill.

13.0 HYDROGENATION

Hydrogenation is the unit process in which hydrogen is added to various compounds.

The hydrogenation processes are similar. The major operations are a catalytic reactor and a purification system. Figure 13 is a typical process diagram. The principal organic chemicals manufactured by hydrogenation are listed in Table 13.

13.1 Description of Discharges

Releases from a typical hydrogenation process occur as fugitive gaseous emissions, as vent gases, in wastewater, and as catalytic residue.

Fugitive	- pressure relief valves, pump seals, compressor seals, and drains.
Reactor	- off-gases from reactor vents.
Purification	- vents from distillation columns, bottoms from distillation columns.
Storage and Handling	- vents from feed tanks, product tanks, and loading.
Secondary	- residue from catalytic recovery.

Releases from hydrogenation processes are quantified in Versar (1982).

14.0 HYDROHALOGENATION

Hydrohalogenation is the process in which a halogen atom is added to an organic compound with a halogen acid, e.g., hydrogen chloride, acting as the halogenating agent. Table 14 presents chemicals produced, other

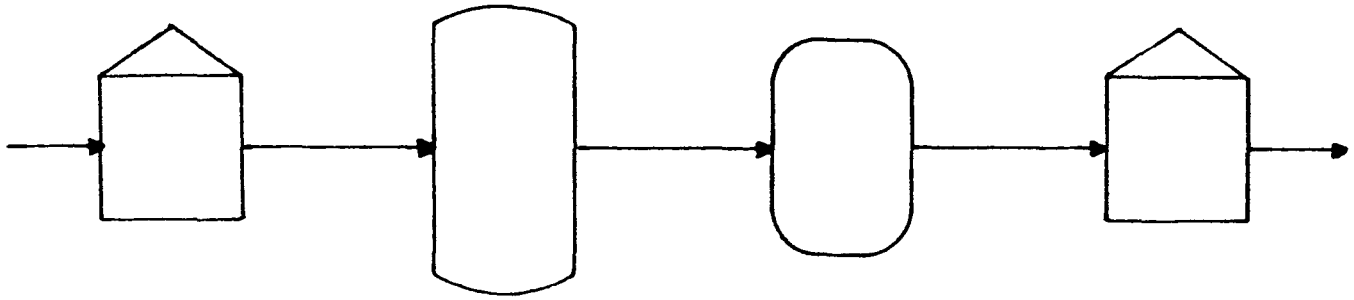

Figure 13. A typical hydrogenation process.

TABLE 13. HYDROGENATION PRODUCTS AND THEIR PRODUCTION IN 1979

Product	Amount (kkg)	Feedstock	Other Required Processes
Adiponitrile	NA	butadiene	ammoxidation halogenation
m-Aminophenol	NA	nitrobenzene	hydrolysis sulfonation
p-Aminophenol	NA	nitrobenzene	acid rearrangemei
Aniline	310,402	nitrobenzene	none
1,3-bis(aminomethyl) cyclohexane	NA	isophthalonitrile	none
n-Butanol n-Butyraldehyde	344,924 427,791	propylene carbon monoxide	carbonylation (oxo)
Caprolactam	425,428	toluene, ammonia	acid rearrangemei oxidation
Crotonaldehyde n-Butyraldehyde n-Butyl alcohol	NA 427,791 344,924	acetaldehyde	condensation dehydration
Cyclohexane	1,091,376	benzene	none
Cyclohexanol	NA	phenol	none
Cyclohexylamine	NA	aniline	none
Cyclohexylamine	NA	nitrobenzene	
3,3'-Dichlorobenzidine dihydrochloride	NA	1-chloro-2-nitro-benzene	benzidene rearrangement
2-Ethylhexanol n-Butanol isobutyraldehyde	NA 344,924 NA	carbon monoxide propylene	carbonylation (oxo)
2-Ethylhexanol	NA	acetaldehyde	condensation
Hexamethylenediamine	NA	adiponitrile	none

Table 13. (Continued)

uct	Amount (kkg)	Feedstock	Other Required Processes
methylenediamine	NA	adipic acid ammonia	ammoxidation
azobenzene (sym-N'-diphenylhydrazine)	NA	nitrobenzene	condensation
utyl alcohol	NA	propylene	carbonylation (oxo)
rene (2-methyl-3-butadiene)	246,589	acetone acetylene	condensation dehydration
opropyl-N'-phenyl-phenylenediamine	NA	acetone aniline p-chloronitrobenzene	alkylation condensation dehydrogenation
ethionine	NA	acrolein cyanic acid methyl mercaptan	condensation
thyl-2-butanol	NA	acetone acetylene	condensation
yl isobutyl ketone	NA	acetone	condensation dehydration
itol (1,2,3,4,5,6-xanehexol)	115,167	corn sugar or corn syrup	none
ene diisocyanate (TDI) 0/20-2,4-2,6-TDI)	309,170	phosgene toluene	nitration phosgenation
lenediamine	NA	isophthalonitrile	none

ces: Herrick et al. 19791; USITC 1979.

TABLE 14. HYDROHALOGENATION PRODUCTS AND THEIR MANUFACTURE

Product	Amount (kkg)	Feedstock	Other Required Processes
Choline chloride	26,100[2]	ethylene oxide trimethylamine	amination by ammonolysis, condensation
Ethyl chloride	264,000[2]	ethylene	
Isoprene	248,560*[2]	formaldehyde isobutylene	condensation pyrolysis
Methyl bromide	16,640[3]	methanol	
Methyl chloride	209,900[2]	methanol	
1,1,1-Trichloroethane	324,900[2]	vinyl chloride	halogenation
Vinyl chloride monomer	108,880[1]	acetylene	

Source: Herrick et al. 1979a.
[1]SRI 1981.
[2]USITC 1979.
[3]USITC 1977.

*Assumes 100% by pyrolysis.

processes required, required feedstock, and production volumes for products that can be manufactured by the hydrohalogenation process.

A typical hydrohalogenation process (the manufacture of vinyl chloride monomer using hydrogen chloride and acetylene as feedstock) is shown in Figure 14.

14.1 Description of Discharges

Releases from a typical hydrohalogenation process will result as fugitive emissions from process pumps, compressor seals, process valves, pressure relief valves, cooling towers, and drains. When process pressures are higher than cooling water pressures, VOC can leak into the cooling and escape as a fugitive emission from the cooling towers (White 1980b). Pollutants are also released from purging catalyst beds and catalysts regeneration. Waste is also generated from the removal of spent catalysts. The disposal of catalyst residue in landfills and the combustion of organic wastes are sources of emissions.

Production separation and purification result in fugitive and intermittent emissions, and heavy polymeric matter (Faith et al. 1965). Emissions can occur when wastewater from process sources is sent to wastewater treatment systems and the VOC is desorbed.

Specific releases from hydrohalogenation are quantified in Versar (1982).

15.0 HYDROLYSIS AND HYDRATION

Hydrolysis is the process by which an organic feedstock is reacted with water to form one or more new chemical compounds. The reaction occurs at moderately high temperatures and pressures, 150 to 500°C and 60 to 100 atm, respectively. The reactor is usually a catalytic bed, containing ion-exchange catalysts such as phosphoric acid in diatomaceous earth or

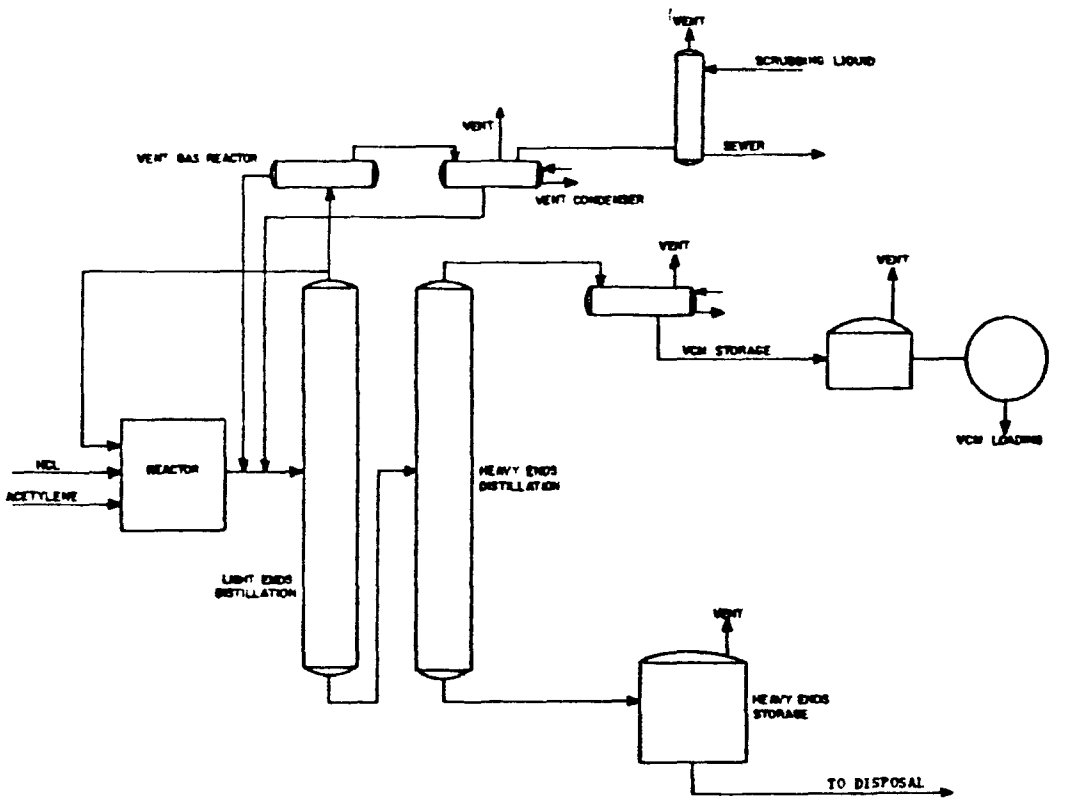

Figure 14. A typical hydrohalogenation process: manufacture of vinyl chloride from acetylene and hydrogen chloride.

Source: Carpenter 1974.

catalytically active silicic acid. Hydrolysis products and their 1980 production levels are found in Table 15.

A typical hydrolysis process is shown in Figure 15.

15.1 Description of Discharges

Releases from a hydrolysis process will occur as fugitive and particulate gaseous emissions and liquid wastes. The major sources of contamination are (1) gaseous emissions from vents on the reactor, scrubber, and distillation columns which pull off excess feedstock and by-products, (2) cooling water contamination from mixing in the condensers with the distillation column overhead, and (3) liquid emissions in waste streams from the final product purification system containing excess feedstock and by-products.

Fugitive gaseous emissions	- may occur from valves and process pumps; are released from contaminated cooling water supply.
Reactor	- gaseous excess feedstock will be released through a vent on the reactor.
Separator	- excess feedstock and by-products are released through vents in the gaseous form.
Scrubber	- excess feedstock and by-products are released through vents in the gaseous form, and in the liquid form they are washed out in a waste stream.
Dehydration	- excess feedstock and by-products are released through a vent in the gaseous form.
Light ends column	- light impurities are released in the gaseous form through a vent.
Final product column	- excess feedstock and by-products are released through a vent in the gaseous form, and in the liquid form they are washed out in a waste stream.

Specific releases from this process are quantified in Versar (1982).

TABLE 15. HYDROLYSIS PRODUCTS AND THEIR PRODUCTION IN 1980

Product	Amount* (kkg)	Feedstock	Other Required Processes
Acetic acid, methanol	711,233	Methyl acetate	
Acrylamide	54,431	Acrylonitrile	
Alcohols, mixed linear sulfate ammonium salt sodium salt triethanolamine salt unspecified salts	NA	Fatty alcohols, sulfur trioxide	sulfonation
Alkylbenzene sulfonate	NA	Alkylbenzenes, sulfur trioxide	sulfonation
m-Aminophenol	NA	Nitrobenzene	hydrogenation sulfonation
sec-Butyl alcohol	299,371 (feedstock not specified)	Butylene	sulfonation
sec-Butyl alcohol		Butene-1/butene-2	
Epichlorohydrin	170,551	Allyl chloride, hypochlorous acid	chlorohydrinati
Ethyl alcohol	NA	Ethylene	
Ethyl alcohol, ethyl ether	23,224	Ethylene	
Ethylene glycol	1,952,262	Ethylene oxide	
Ethylene oxide, ethylene glycol	2,414,926	Ethylene	oxidation
Formic acid, sodium formate	27,215	Carbon monoxide, sodium hydroxide	carbonylation
Formic acid	27,215	Carbon monoxide (methanol recycled)	carbonylation condensation
Glycerin	14,515	Allyl alcohol, peracetic acid	epoxidation
Acetic acid	14,515	Peracetic acid	
Glycerine (glycerol)	36,287	Propylene → Allyl chloride → Epichlorohydrin	chlorohydrinati halogenation

Table 15. (Continued)

r	Amount* (kkg)	Feedstock	Other Required Processes
yl alcohol	1,025,119	propylene	sulfonation
yl alcohol		propylene	
acid(cis-1,2-ethylene-oxylic acid)	NA	maleic anhydride	
ethylketone	252,197	butene-1/butene-2	dedhydrogenation
methacrylate r	413,676	acetone, hydrogen cyanide, methanol	esterification hydrocyanation sulfonation
thol	NA	naphthalene	sulfonation
lorophenol	NA	hexachlorobenzene	
	NA	monochlorobenzene	
	NA	benzene, sulfuric acid	sulfonation
	NA	benzene, hydrogen chloride	oxyhalogenation
, acetone	1,416,297 1,909,805	benzene, propylene	acid cleavage alkylation oxidation
ne glycol lihydroxypropane)	315,700	propylene oxide	
ne oxide	533,425 NA	propylene tert-butyl alcohol (recycled chlorine)	chlorohydrination halogenation
ne oxide	533,425	propylene, chlorine solution	chlorohydrination
trichlorophenol	NA	benzene, methanol, sodium hydroxide	halogenation

: SRI 1981; Herrick et al. 1979a.

lists amounts in plant capacities. For this table, the capacities were multiplied by 0.8.

The production data shown do not necessarily imply that hydrolysis in combination with the other required processes is the only product manufacturing train in commercial use.

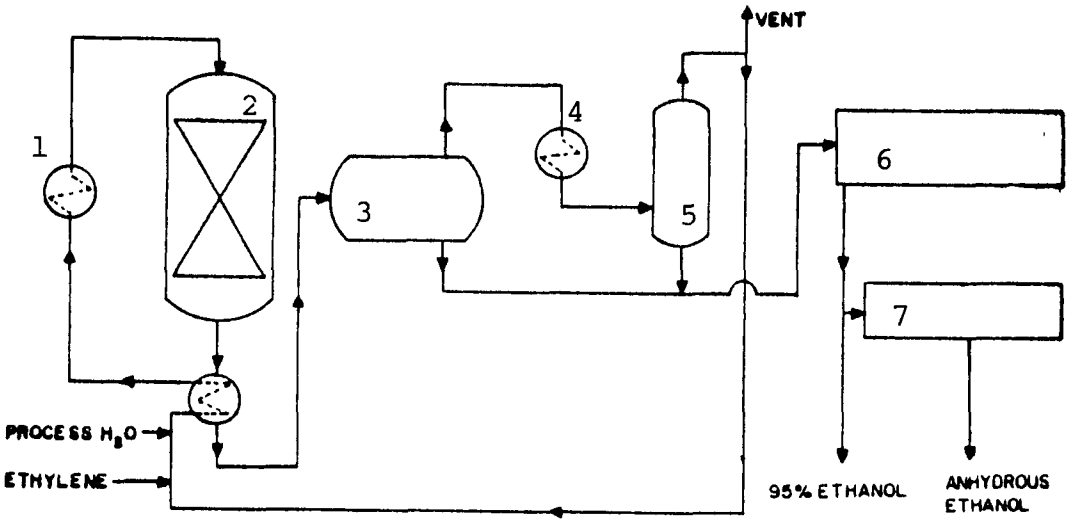

Figure 15. General hydrolysis process.

1) heater

2) reactor

3) separator

4) cooler

5) scrubber

6) distillation column

7) dehydrator

16.0 NITRATION

Nitration is the process in which nitrogen is introduced into a hydrocarbon by the use of nitric acid.

Table 16 lists the principal organic chemicals manufactured by nitration. Figure 16 shows a nitration process sequence, the manufacture of nitrobenzene from nitric acid and benzene.

16.1 Description of Discharges

Emissions from a typical nitration process are released to the three media of air, land, and water at different stages in the process.

Reactor	- volatile organic emissions, nitrogen oxide emissions, and sulfuric acid fumes.
Washer/Neutralizer	- nitrobenzene, nitrated phenols, sodium sulfate, and sodium carbonate combined in the wastewaters; purges of volatile organics.
Sulfuric acid regeneration acid	- purges of nitrogen oxide, sulfuric acid fumes, and volatile organics.
Product Upgrading	- purges of volatile organics from condensers; possibility of nitro-substituted aromatic compounds in the heavy ends.
Storage Vessels	- storage of feedstock and product result in volatile organic compounds emissions.
Fugitive Emissions	- occur from valves, flanges, pump seals, compressor seals, pressure relief valves, drain, and cooling towers.
Secondary Emissions	- occur from the handling and disposal of process waste liquid.

Specific releases are quantified in Versar (1982).

17.0 OXIDATION

The unit process of oxidation is the chemical reaction of organic compounds with oxygen to introduce one or more oxygen atoms into the compound, and/or to remove hydrogen atoms from the compound.

TABLE 16. NITRATION PRODUCTS[1] AND THEIR MANUFACTURE IN 1980[2]

Product	Amount (kkg)	Feedstock	Other Required Processes
o-Aminophenol	NA[3]	Phenol	Amination by reduction
4,6-Dinitro-o-cresol	NA[3]	Cresol	None
2,4-Dinitrophenol	NA[3]	Phenol	None
2,4-Dinitrotoluene	NA[3]	Toluene	None
2,4-(and 2,6) Dinitrotoluene	NA[3]	Toluene	None
Nitrobenzene	610,176	Benzene	None
o-Nitrophenol	NA[3]	Phenol	None
p-Nitrophenol	29,056	Phenol	None
∿-Nitrophenol	NA[3]	Toluene	None
o-Nitrotoluene	NA[3]	Toluene	None
p-Nitrotoluene	NA[3]	Toluene	None
Toluene diisocyanate (TDI)	259,688	Phosgene	Hydrogenation
(80/20 2,4=2,6-TDI)		Toluene	Phosgenation

Sources: 1. Herrick et al. 1979a.
2. SRI 1981. Production levels are assumed to be 80% of plant nameplate capacity. It may not be assumed, however, that the products are solely manufactured by a nitration process.
3. SRI 1981. No quantitative data are available. However, a list of manufacturers is provided.

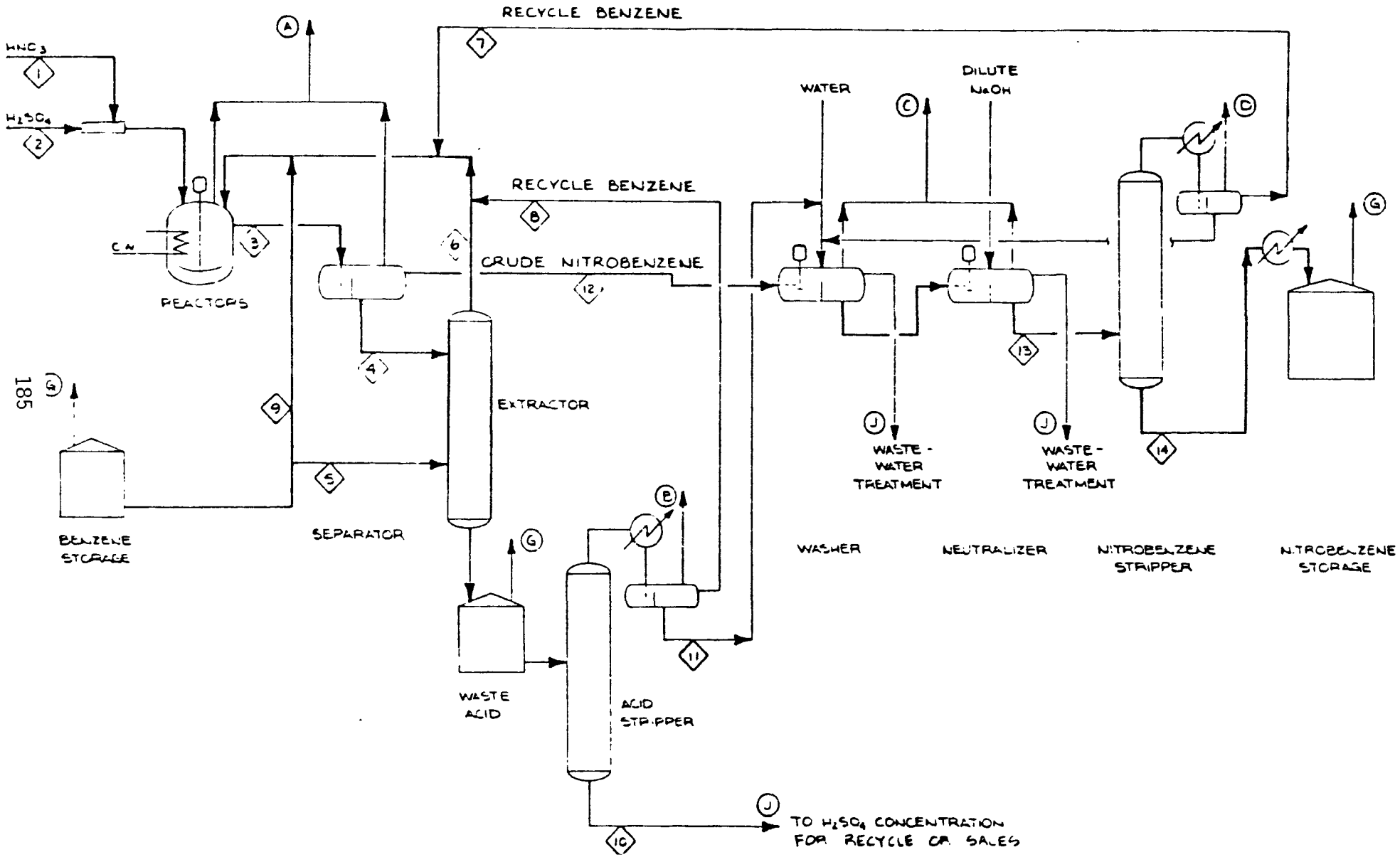

Figure 16. Process flow diagram for manufacture of nitrobenzene.

Source: White 1980c.

Table 17 presents the principal organic chemicals manufactured by oxidation. Figure 17 is an oxidation process diagram for the production of maleic anhydride.

17.1 Description of Discharges

Releases from a typical oxidation process occur as fugitive gaseous emissions, as vent gases, in wastewater, and as catalyst residue.

Fugitive	- occur from process valves, process pump seals, relief valves, compressor seals, drains, and cooling towers.
Process	- occur from reactor off-gases.
Separation and purification	- occur from scrubber vents, scrubber wastewater, and distillation vents.
Storage	- occur from feed, intermediate, and product storage.
Handling	- occur from transfer of organics.
Secondary	- occur from catalyst residue.

Specific releases are quantified in Versar (1982).

18.0 OXYHALOGENATION

In the oxyhalogenation process, a halogen acid is catalytically oxidized to the halogen with air or oxygen. Commercial applications of the process use oxychlorination in which chlorination is accomplished by catalytically oxidizing hydrogen chloride to chlorine with air or oxygen (see Table 18 and Figure 18).

TABLE 17. OXIDATION PRODUCTS AND THEIR PRODUCTION IN 1979

	Amount (kkg)	Feedstock	Other Required Processes
yde	479,906[1]	ethylene	none
ld	1,481,044	n-butenes	alkylation
ld	1,481,044	light naphtha	none
ld acid	1,481,044 NA	acetaldehyde	none
d lic acid	1,481,044 NA	n-butane p-xylene	none
	478,091[1] 36,553	benzene propylene	none
	NA NA	hydrocarbons (C_1-C_8)	cracking
:ld yde	NA 275,788 NA	propylene	none
:ld ters	328,720[2]	propylene alcohols	esterification
d	682,160[3]	cyclohexane	none
d	682,160[3]	cyclohexyl alcohol	none
ione	18,897[1]	anthracene	none
ld	34,946	toluene	none
alcohol	NA	isobutane	none
im	428,828	cyclohexane	Beckmann rearrangement oxidation
im	428,828	toluene	acid rearrangement hydrogenation
ione alcohol	739,200[4]	cyclohexane	none

Table 17. (Continued)

Product*	Amount (kkg)	Feedstock	Other Required Processes
Dimethyl terephthalate	653,600[3]	methanol p-xylene	esterificat
Ethyl acrylate	143,328	ethyl alcohol propylene	esterifica
Ethylene oxide	8,618[5]	ethylene	none
Ethylene oxide/ ethylene glycol	8,618[5]/2,144,866	ethylene	hydrolysis
Formaldehyde	2,708,479	methanol with silver catalyst	none
Formaldehyde	2,708,479	methanol with metal oxide catalyst	none
Formaldehyde	NA	dimethyl ether	none
Formic acid	8,165[5]	light hydrocarbons	none
Fumaric acid (trans-1,2-ethylene dicarboxylic acid)	23,078	benzene	isomerizat
Glycerine	47,200[6]	propylene	none
Isophthalic acid	NA	m-xylene	none
Maleic anhydride	146,614	butadiene (and other C_4 hydrocarbons)	none
Maleic anhydride	146,614	benzene	none
Maleic anhydride	146,614	butene-1, butene-2, butadiene (if present)	none
Methyl methacrylate	422,241	isobutylene, methanol	esterificat
Pelargonic acid Caproic acid Azelaic acid	NA NA NA	oils (tall, red, soybean)	ozonolysis
Pelargonic acid Undecanoic acid Tridecanoic acid	NA NA NA	α-olefins	ozonolysis

Table 17. (Continued)

	Amount (kkg)	Feedstock	Other Required Processes
	1,315,715 782,254	cumene	acid cleavage
	36,553 NA	benzene, propylene	acid cleavage alkylation
	36,553 NA	cyclohexane	dehydrogenation
anhydride	215,459[5]	naphthalene	none
anhydride	215,459[5]	o-xylene	alkylation
dianhydride 5-benzenetetra- lic-1,2,4,5-dianhydride)	NA	pseudocumene	alkylation
acid ic acid	NA NA	cyclic olefins	ozonolysis
alic acid	1,051,200[3]	p-xylene	none
rofuran, tetracarboxylic ride	NA NA	furan maleic anydride	condensation
hylthiuram de (thiuram) ethylthiocarb- isulfide)	NA	ammonia, carbon disulfide, dimethylamine, hydrogen peroxide	condensation
tic anhydride benzene-tricarboxylic ,2-anhydride)	NA	pseudocumene	none

Hedley et al. 1979a, USITC 1980.

xidation is not always the major method of production of these chemicals.

idation processes have more than one product.

1967, production in 1964.
980d, 80% of 1976 capacity of both products.
980d, 80% of 1978 capacity.
980d, 80% of 1979 capacity of both products.
965, production in 1963.
80d, 80% of 1977 capacity.

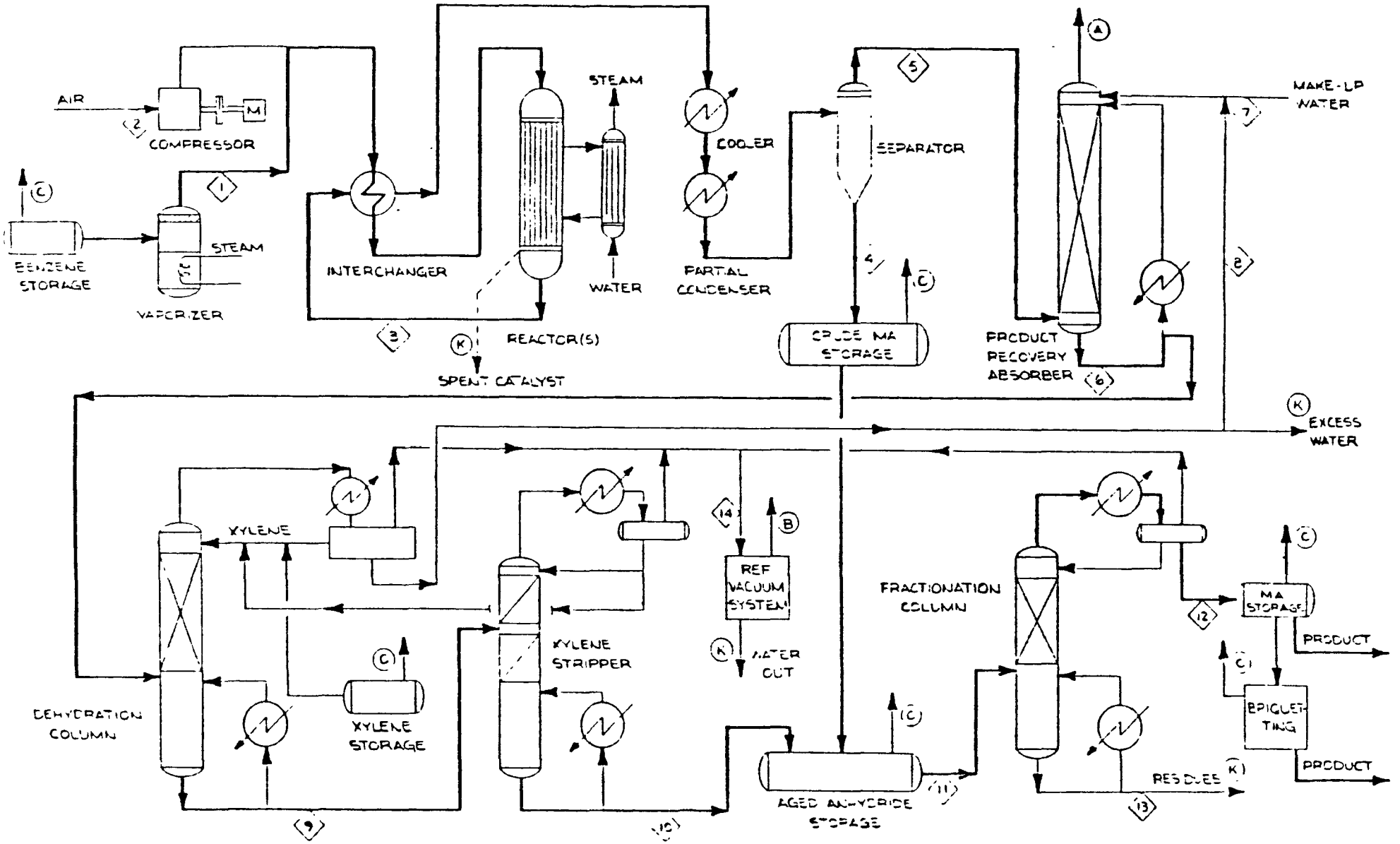

Figure 17. Process flow diagram for model plant of uncontrolled

Table 18. Oxyhalogenation Products[1] and Their Manufacture in 1979[2]

Product	Amount (kkg)	Feedstock	Other Required Processes
Ethylene dichloride	5,350,000	Ethylene	none
Perchloroethylene	350,640	Any C_2	Halogenation
Trichloroethylene	144,892	Chlorocarbon mixture	Catalytic cracking
Phenol	36,552[3]	Benzene, HCl	Hydrolysis
Vinyl chloride monomer	NA	Ethane Chlorine	Dehydrohalogenation Halogenation
Vinyl chloride monomer	1,823,440[4]	Ethylene Chlorine	Dehydrohalogenation Halogenation
Vinyl chloride monomer	NA	Naptha Chlorine	Dehydrohalogenation Halogenation

ources:

Herrick et al. 1979a.

USITC 1979. Total production from all processes.

Includes all phenol produced with the exception of phenol from cumene, production, coke ovens, and gas-retort ovens.

SRI 1981. Production levels are assumed to be 80% of plant nameplate capacity.

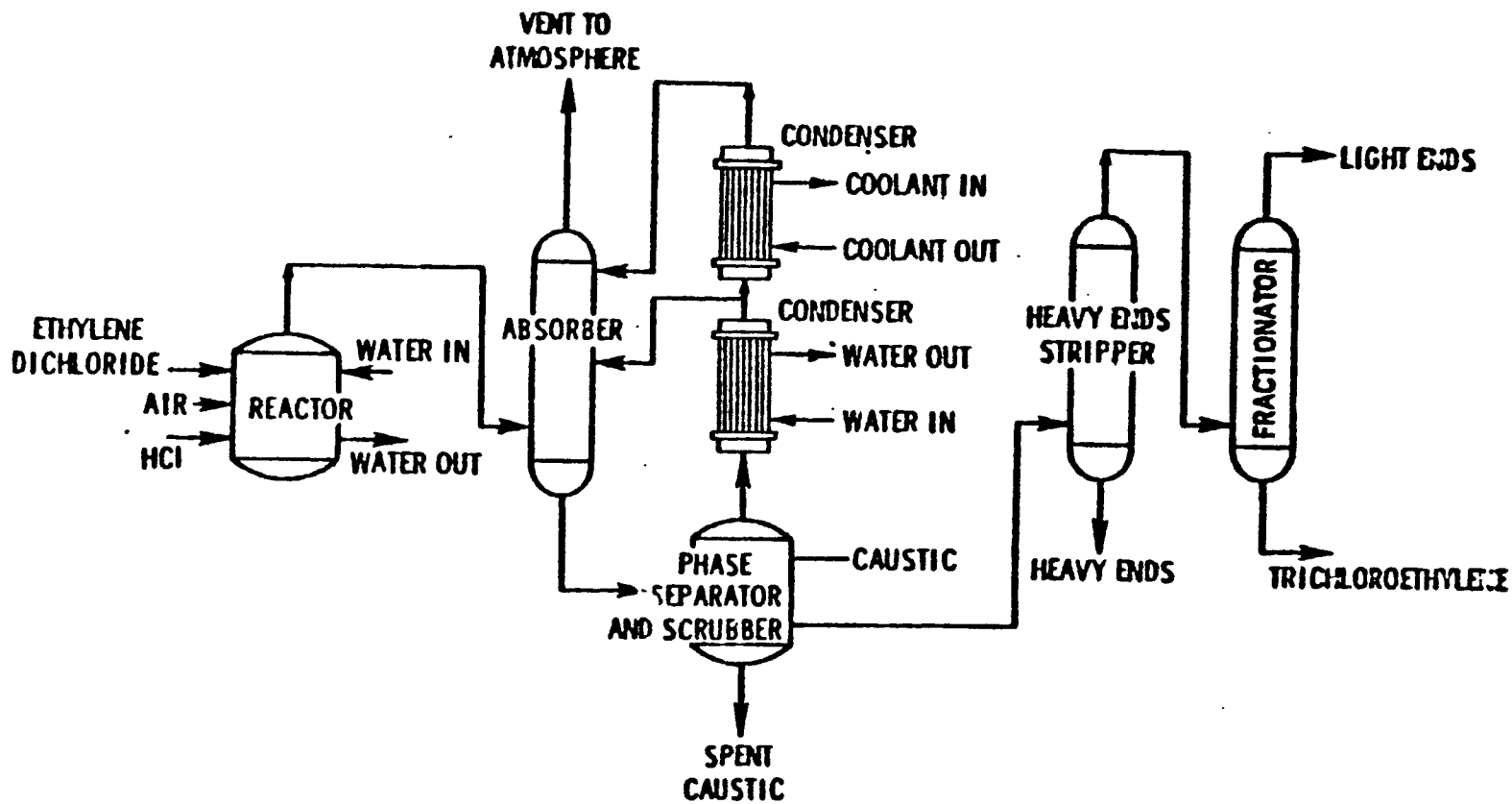

Figure 18. Manufacture of trichloroethylene by oxychlorination.

SOURCE: Khan and Hughes 1979.

18.1 Description of Discharges

Oxyhalogenation manufacturing process emissions usually consist of hydrocarbons. These may be feedstock, impurities in the feedstock, products, and by-products.

Emissions from two typical oxyhalogenation manufacturing processes may be classified under the headings of fugitive, process, secondary, and storage and handling:

Fugitive emissions	- occur from pressure relief valves, flanges, pump seals, valve steams, and compressors. When process pressures are higher than cooling water pressure, VOC can leak into the cooling water and escape as a fugitive emission from the cooling tower.
Process emissions	- from absorber vents which release inert gases from the oxygen, chlorine, hydrogen chloride, and other feeds; drying column releases or non-condensable gases; and neutralizer vents.
Secondary emissions	- from wastewater containing VOC in the waste treatment system and from the combustion of tars in the incinerator.

Specific releases from this process are quantified in Versar (1982).

19.0 PHOSGENATION

Phosgenation is the process in which phosgene reacts with an amine to form an isocyanate or in which phosgene reacts with an alcohol to form a carbonate.

Table 19 lists the chemicals produced by phosgenation. Figure 19 is a flow diagram for diisocyanate production by the phosgenation process.

19.1 Description of Discharges

Waste streams will contain fugitive emissions from valves, gas compressors, wastewater treatment systems, and cooling water systems.

TABLE 19. PHOSGENATION PRODUCTS AND THEIR MANUFACTURE IN 1980†

Product	Amount (kkg)	Feedstock	Other Required Processes
Diphenylmethane-4,4'diisocyanate [methylene bis(4-phenylisocyanate)] (MDI)	260,816	Aniline Formaldehyde Phosgene	None
Polycarbonate resins	151,953	Bisphenol A Phosgene	Dehydrogenation Polymerization
Toluene diisocyanate (TDI)[80/20, 2,4,-2,6-TDI	324,318	Phosgene Toluene	Hydrogenation

Sources: Herrick et al. 1979a.
SRI 1981.
†Levels of manufacture are based on plant nameplate capacities with unspecified production

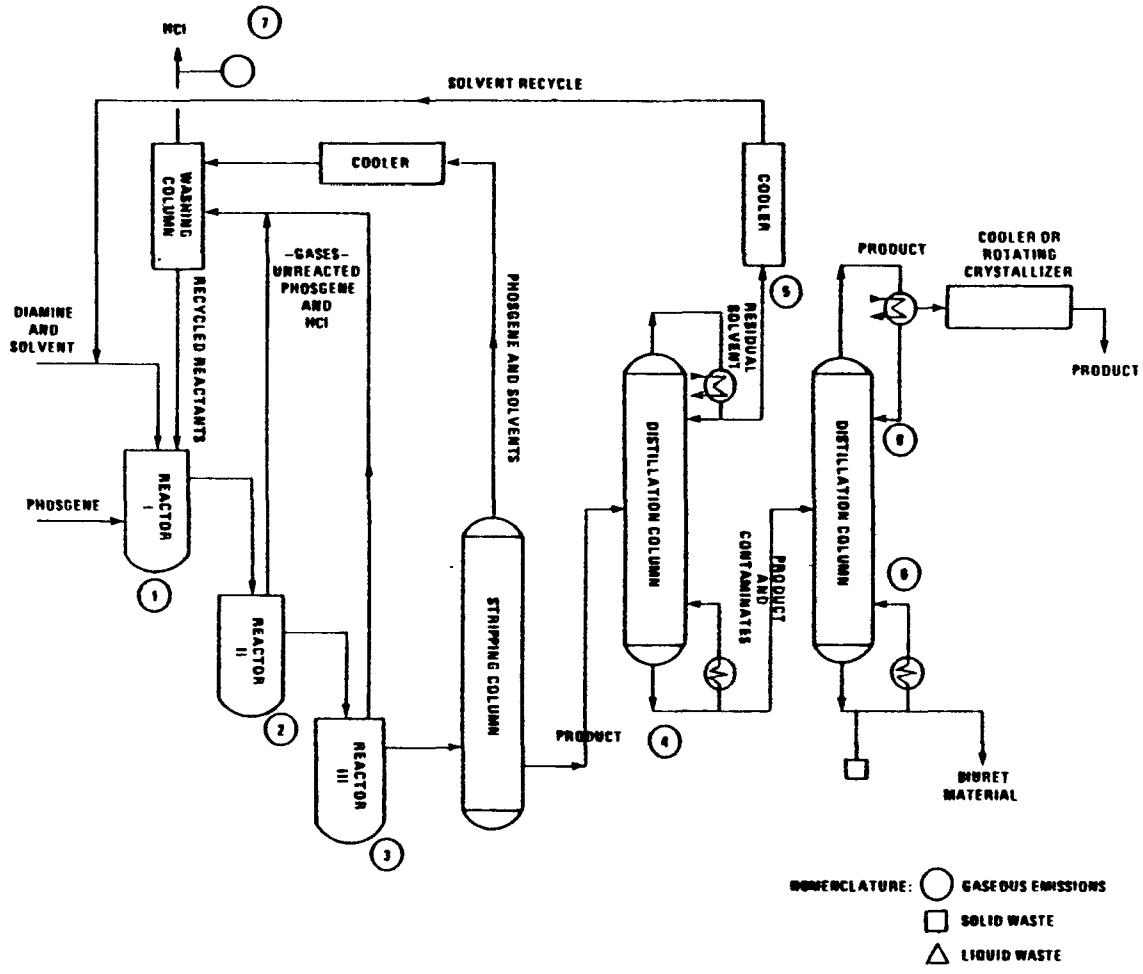

Figure 19. Flow diagram for diisocyanate production.

Source: Adapted from Pistor et al. 1977 and Nersasian 1975.

Emissions to the atmosphere can be expected from distillation unit vents, pump seals and flanges, and catalyst incineration. Solid waste will include polymeric residue as a result of product purification.

White (1980c) reports that phosgene is ∿99% of the estimated uncontrolled VOC emissions associated with the solvent recovery and TDI production distillations.

Specific emissions for this process are quantified in Versar (1982).

20.0 POLYMERIZATION

Polymerization is the process where simple molecules, i.e., monomers, are reacted to form polymers.

The organic chemicals most frequently made by polymerization and their amounts produced in 1979 are listed in Table 20. A polymerization reaction is illustrated in Figure 20.

20.1 Description of Discharges

Releases from the polymerization processes occur as fugitive and particulate gaseous emissions, liquid wastes, and solid residues. The major sources of air contamination are: 1) the emissions of raw materials or monomers, 2) emissions of solvents or other volatile liquids during the reaction, 3) emissions of sublimed solids (such as phthalic anhydride in alkyd resin production), and 4) emissions of solvents during storage and handling of thinned resins (USEPA 1977). Wastewater may emanate from within the process where it was required for the process operating conditions; it may be formed during the course of chemical reactions; or it may be used in washdown of process vessels, area housekeeping, utility blowdown, and other sources such as laboratories (USEPA 1974). Solid residues will result from precipitates of separation and purification processes and bottoms products of distillation columns.

fugitive gaseous emissions	- may occur from valves, flanges, pump seals, compressor seals, pressure relief valves, drains, and cooling towers.

TABLE 20. ORGANIC CHEMICALS MANUFACTURED IN POLYMERIZATION[1]

	Annual Production (kkg 1979)[2]	Reactants	Other Required Processes
esins	517,856	acrylonitrile	
rile-butadiene- resins (ABS)	567,665	acrylonitrile butadiene styrene	
in	217,595	bisphenol A epichlorohydrin	
propylene er resins	176,389	ethylene or propylene	
vinyl acetate er resins	-	ethylene vinyl acetate	
resins (Nylon 6)	131,091	caprolactum	
resins (Nylon 66)		adipic acid hexamethylene diamine	
lene[3]	9,281	butadiene	
lene-acrylonitrile (NBR)	73,253	acrylonitrile butadiene	
as	-	butene-1/butene-2	
nate resins	-	bisphenol A phosgene	dehydrohalo-genation phosgenation
oprene (neoprene)	83,163	chloroprene	
resins (saturated)	267,660	glycols polybasic acids styrene	
resins[4] (unsaturated)	536,036	glycols styrene unsaturated dibasic acids	
glycols	830,497	ethylene oxide propylene oxide	
glycols		ethylene oxide propylene oxide alcohols	

Table 20. (Continued)

Products	Annual Production (kkg 1979)[2]	Reactants	Other Req Process
Polyethylene (low density)	3,393,853	ethylene	
Polyethylene (high density)	2,234,543	ethylene	
Polyethylene terephthalate	172,847	ethylene glycol terephthalic acid	esterifi
Polyethylene terephthalate		dimethylterephthalate ethylene glycol	condensa
Polyisobutylene	-	isobutene butenes	
Polyisocyanate	129,264	organic dichlorides sodium cyanate	pyrolysi
Cis-polyisoprene	-	isoprene	
Polypropylene	1,734,513	propylene	
Polystyrene	1,062,650	styrene	
Polystyrene (high impact-rubber modified)	682,268	polybutadiene styrene	
Polyvinyl acetate	410,135	vinyl acetate	
Polyvinyl alcohol resins	75,591	vinyl alcohol	
Polyvinyl chloride resins	2,817,481[5]	vinyl chloride	
Polyvinyl chloride-acetate copolymer	-	vinyl acetate vinyl chloride	
Polyvinyl chloride-vinylidene chloride copolymer resins	9,908	vinyl chloride vinylidene chloride	
Propylene tetramer	-	propylene	
Styrene-butadiene resin[3] (SBR)	1,641,766	styrene butadiene	
Urea-formaldehyde resin	624,918	biuret formaldehyde urea	

[1]Source: Herrick et al. 1980.
[2]Source: USITC, Synthetic Organic Chemicals; 1979
[3]Solution and emulsion polymerization
[4]Annual production includes polyethylene terephthalate, polybutylene terephthalate, and other saturated polyester resins
[5]Value includes polyvinyl chloride copolymers

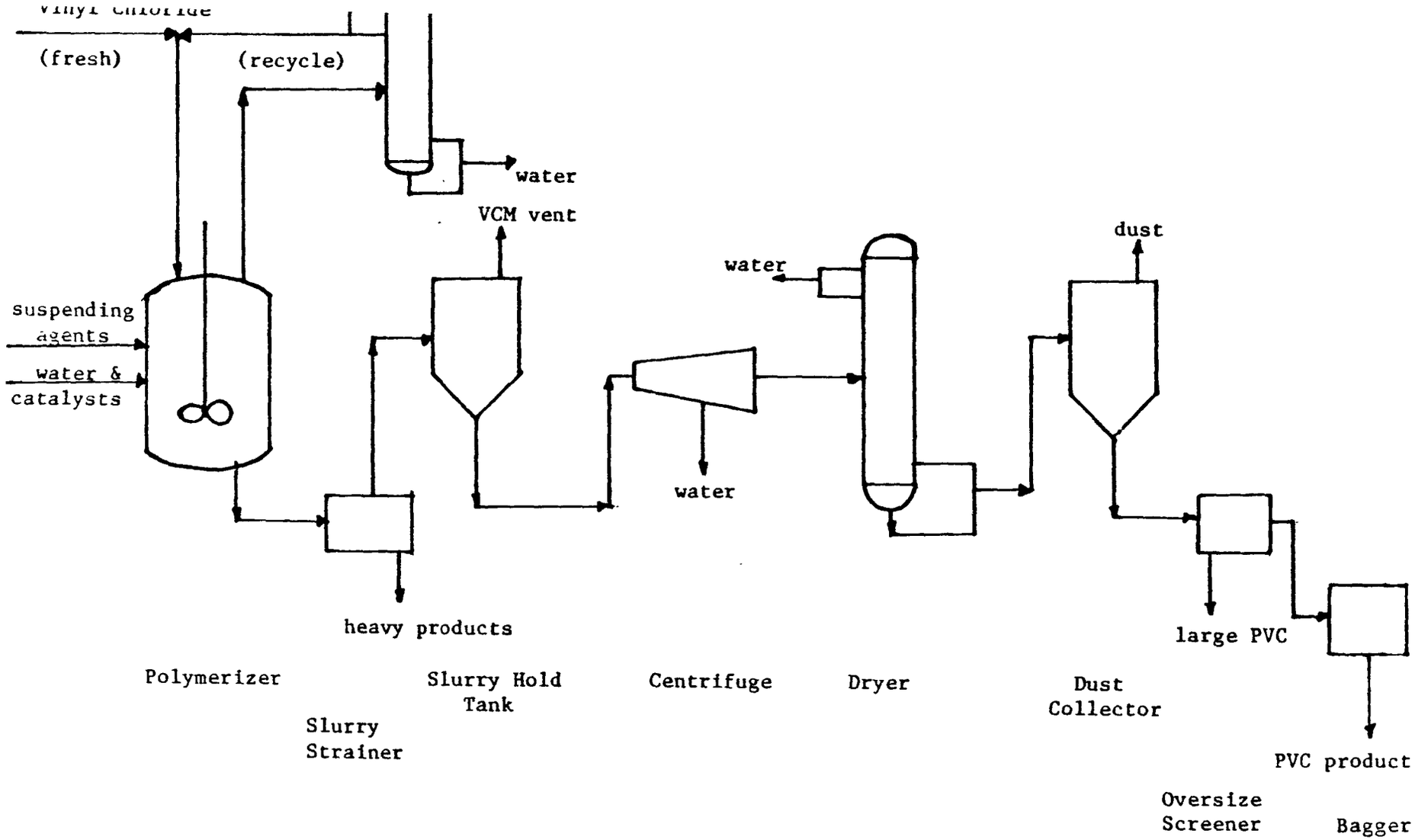

Figure 20. Process flow diagram for the manufacture of polyvinyl chloride.

Reactants and solvent purification	- gaseous releases may occur from fractionating columns and driers.
	- liquid wastes may occur from caustic and water washes and driers.
	- emissions occur during storage and transport of monomers and solvents from vents in tanks and leaks in liquid transport.
Reaction and product concentration	- reactants are released from vents on polymerization reactors.
	- effluent waters from centrifuges are contaminated with reactants and products.
	- solid effluents from settlers are disposed of.
Blending and solvent removal	- addition of stabilizers may contaminate as the results of spillage.
	- solvent removal involves centrifuges, distillation columns, and liquid-liquid extraction which results in contaminated effluent waters, fugitive and intermittent air emissions, solid bottoms product, and liquid wastes containing extraction solvents.
Drying and packaging	- air emissions occur from drying towers, baggers, and dust collectors.
	- solid residues are collected from screeners, which eliminate oversized particles, and as losses due to spillage
	- oil and grease are released from lubricating extruders.

A characteristic of some polymerization processes is that the solid resins products are sold as pellets (chips), molding powder, protective coatings, or as latex resin. The treatment after polymerization varies with each use. No further wastes are generated if the resin is sold in latex form because no further processing is required. Protective coatings

go to agitated thinning tanks which release a liquid waste caused by spills and washout. Resins for moldings are dried and crushed into molding powder which release air and solid emissions. Pellets are formed by drying and cutting, usually in a screw-extruder, and then are passed through a dust collector and an oversized screener. The wastes occur as air emission, liquid wastes, and solid residues. The liquid wastes result because oil and grease used as lubricants are released. Solid residues result from the oversize screening process. Air emissions are released from the extruders and the dust collectors. Sometimes the pellets are processed further in a fiber spinning process. Air, liquid, and solid emissions may occur.

Another characteristic of the polymerization processes is that monomers slowly polymerize in the pipelines, especially in the monomer recovery system pipelines. These lines must be cleaned out periodically, and the polymers are scrapped.

20.2 Production Process - Polyvinyl Chloride by Polymerization

Vinyl resins rank second in production to polyethylene. More emission data are available on the production of polyvinyl chloride (PVC) than polyethylene. Vinyl chloride monomer is one of the EPA's 129 priority pollutants; ethylene is not a priority pollutant. Therefore, the manufacturing process described in detail with emission points for this section will be the process for the manufacture of polyvinyl chloride by polymerization of vinyl chloride monomer: an addition reaction.

21.0 PYROLYSIS

Pyrolysis, also known as cracking, is the decomposition of chemical compounds by heat alone.

The organic chemicals that are manufactured by pyrolysis are listed in Table 21. A typical pyrolysis production process is presented in Figure 21.

Table 21. Organic Chemicals Manufactured by Pyrolysis

Product	Amount (kkg)	Feedstock	Other Required Processes
Acetic anhydride	727,755[2]	Acetic acid	Condensation
Acetylene	137,168[2]	Light hydrocarbons	None
N-butyl acrylate	NA	Acetic acid	None
Cyanuric acid		Urea	None
Cyanuric acid Sodium dichloro isocyanurate Trichloro isocyanuric acid	NA[3]	Caustic soda Chlorine Urea	Halogenation
Ethyl acetoacetate	NA[3]	Acetic acid Ethanol	Esterification
Ethylene Propylene Hydrogen Pyrolysis gas	13,564,215[1]	Butane Propane Ethane Naptha Gas oil	None
Hexachlorocyclopentadiene	NA[3]	Pentane	Halogenation
Isoprene	248,560[1]	Formaldehyde Hydrogen chloride Isobutylene	Condensation Hydrohalogenation
Ketene dimer (diketene)	NA[3]	Acetic acid	None
Melamine	54,432[2]	Urea	Condensation
Melamine		Dicyandiamide	Condensation
Methylacetoacetate	NA[3]	Acetic acid Isopropanol	Esterification
Naphthalene	74,103[1]	Coal tar Petroleum heavy aromatics	None
Oxalic acid	NA[3]	Sodium formate	Condensation
Phenothiazine	NA[3]	Diphenylamine Sulfur	None
Polyisocyanate	NA[3]	Organic dichlorides Sodium cyanate	Polymerization

Table 21. (Continued)

roduct	Amount kkg	Feedstock	Other Required Processes
pylene	6,440,359[1]	Propane Butane Naphtha Gas oil	None

ırce: Herrick et al. 1979a.

urce: USITC, Synthetic Organic Chemicals, 1979.
Assumes 100% of products were made by pyrolysis.

ırce: SRI 1981.
Assumes 80% of capacity is produced and also assumes the amount produced was by pyrolysis.

ırce: SRI 1981.
Does not give amounts produced, but lists producers.

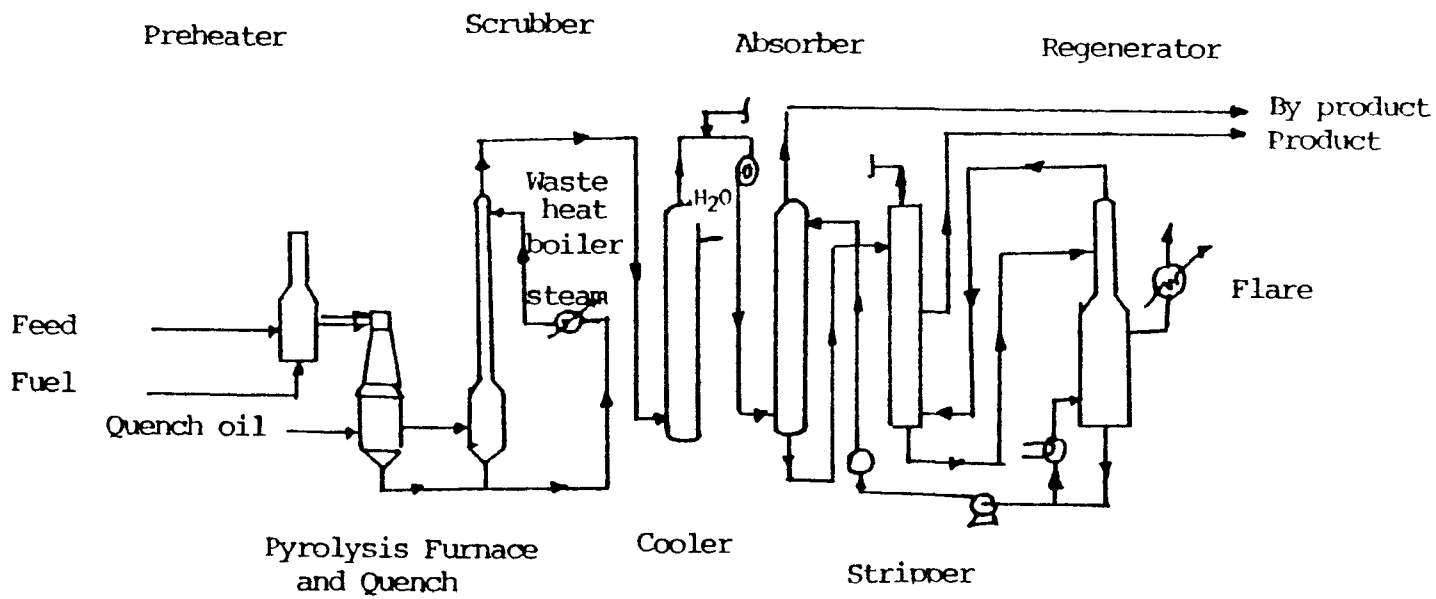

Figure 21. A typical pyrolysis production process.

21.1 Description of Discharges

Releases from a typical pyrolysis process occur in wastewater, as fugitive gaseous emissions, and in solid residues.

fugitive emissions	- occur from valves, flanges, pump seals, compressor seals, pressure relief valves, drains, and cooling towers (Wetherhold et al. 1981).
pyrolysis section	- combustion gases from a gas-fired furnace. - hydrocarbon and coke particulate emissions when decoking the furnace. - contaminated water from steam generation.
product cooling	- contaminated quench water or oil that comes in direct contact with the products in the quench towers. - contaminated cooling water from leaks in heat exchangers.
product purification	- product contaminants are removed by caustic scrubbers, oil scrubbers, gas scrubbers, or absorbers which will have liquid waste streams containing these contaminants. - gas scrubbers generally vent or flare pollutants to air.
separation of products and by-products	- strippers, fractionation columns; the undesired bottoms product will have to be disposed of or recycled.
cooling tower and boiler blowdown	- operation of the steam generation and cooling water systems produces the major portion of wastewater from pyrolysis units.

Specific releases are quantified in Versar (1982).

22.0 REFORMING (STEAM) - WATER GAS REACTION

The reforming (steam) - water gas reaction refers to reacting steam and methane to make water gas (which consists of carbon monoxide, hydrogen, and carbon dioxide) and then converting water gas into methanol.

Table 22 lists the various pressures and reactants used to produce methanol and amounts produced. Figure 22 is a generalized flow diagram of the steam reforming-water gas reaction.

22.1 Description of Discharges

Releases from the reforming (steam) - water gas reaction occur as fugitive and particulate gaseous emissions, liquid wastes, and solid residues. The major sources of contamination are purge vent gases, regeneration gases, spent catalysts, and water from the purification section. Volatile organic compounds (VOCs) are emitted.

Fugitive gaseous emissions	- may occur from valves, flanges, pump seals, compressor seals, pressure relief valves, drains, and cooling towers.
Desulfurization of reactants	- release of hydrogen sulfide, methane, and steam will occur during regeneration of the desulfurization column. - spent catalysts will be landfilled.
Steam reforming of reactant	- emissions will occur, especially during regeneration. - spent catalysts will be landfilled.
Compression	- fugitive emissions will occur especially at compressor seals. - liquid wastes will result when the compressors are flushed and when the oil used to grease the compressors leaks out.
Catalytic converter	- emissions may occur, especially during regeneration. - spent catalysts will be landfilled.
Cooling and condensing	- a purge vent gas from the vapor-liquid separator is the largest process emission.

TABLE 22. REFORMING STEAM-WATER GAS PRODUCTS AND THEIR MANUFACTURE IN 1980

Products	Amount[a] kkg	Feedstock	Other Required Processes
Methanol[b]	1,276,000	Naphtha	None
Methanol[b]		Natural Gas	None
Methanol[c]	2,850,000	Naphtha	None
Methanol[c]		Natural Gas	None
Methanol[c]		Liquified Petroleum	None
Methanol[c]		Naphtha	
Dimethyl Ether		Carbon dioxide	
Total	4,126,000		

Source: Herrick et al. 1980.

[a]Source: SRI 1981

These amounts are 80 percent of the capacities reported in SRI 1981. A density of 49.3 lb/ft^3 (0.792 g/cm^3) was assumed. The ratio of production by high pressure to that by low pressure was obtained from White 1980b.

[b]High pressure process.

[c]Low pressure process.

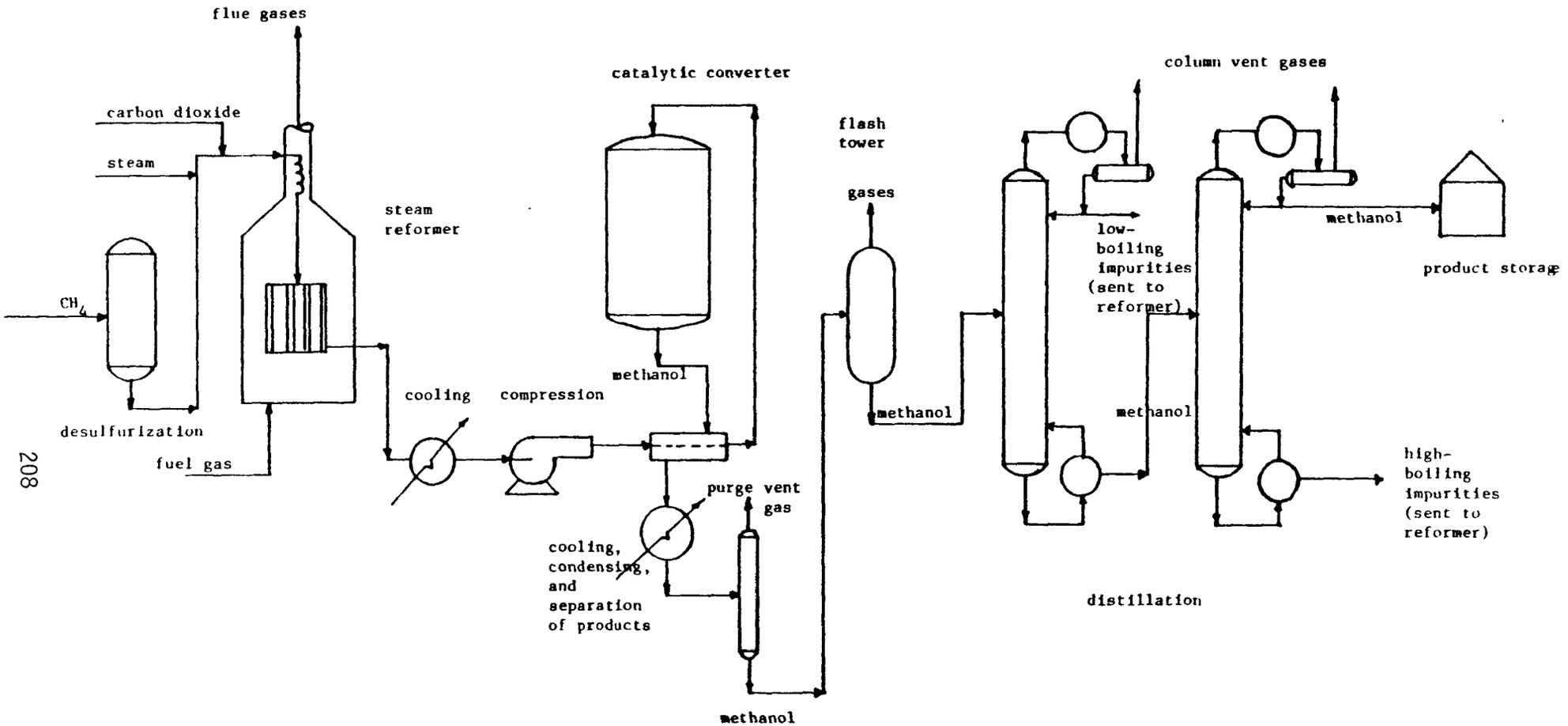

Figure 22. Generalized flow diagram of a reforming (steam) - water gas process.

Distillation section	- vents on the distillation columns and flash tank will emit products and by-products.
	- a water waste stream will be removed and treated.

Specific releases for this process are quantified in Versar (1982).

23.0 SULFONATION AND SULFATION

Sulfonation is the process by which the sulfonic acid group ($\cdot SO_2OH$), the corresponding salt ($\cdot SO_2O-$), or the fulfonyl halide ($\cdot SO_2OX$) is attached to a carbon or a nitrogen atom. Sulfation involves the placement of an $\cdot OSO_2OH$ group on carbon when sulfating an alkene or of an $\cdot SO_2OH$ group on oxygen when sulfating an alconol or a phenol.

The principal organic chemicals manufactured by sulfonation and sulfation are listed in Table 23. Figure 23 is the flow diagram for the manufacture of methyl methacrylate.

23.1 Description of Discharges

Releases from a typical sulfonation or sulfation process occur in wastewater, as vent gases, and as fugitive gaseous emissions.

Fugitive	- occur from valves, flanges, pump seals, compressor seals, pressure relief valves, drains and cooling towers, and storage tanks.
Sulfonation/sulfation section	- neutralization crystals.
	- vent gases from columns and wastewater from columns.

Specific releases for this process are quantified in Versar (1982).

TABLE 23. SULFONATION AND SULFATION PRODUCTS AND THEIR PRODUCTION IN 1979

Product	Amount (kkg)	Feedstock	Other Required Processes
Alkylbenzene sulfonates	295,025	Alkylbenzenes, sulfur trioxide	Hydrolysis
m-Aminophenol	NA	Nitrobenzene	Hydrogenation Hydrolysis
Methyl methacrylate monomer	418,893	Acetone Hydrogen cyanide Methanol	Esterification Hydrocyanation Hydrolysis
2-Naphthol	NA	Naphthalene Caustic soda	
Phenol	36,263	Benzene Caustic soda Sulfuric acid	
Alcohol, mixed linear sulfated -,ammonium salt -,sodium salt -,triethanolamine salt -,unspecified	110,865	Fatty alcohols, sulfur trioxide	Hydrolysis
Sec-Butyl alcohol	NA*	Butylene	Hydrolysis
Ethoxylsulfates	NA	Ethoxylates, sulfur trioxide	None
Isopropyl alcohol	855,169	Propylene	Hydrolysis

Source: Herrick et al. 1979a; USITC 1980.

Note: Sulfonation is not always the major method of production of these chemicals.

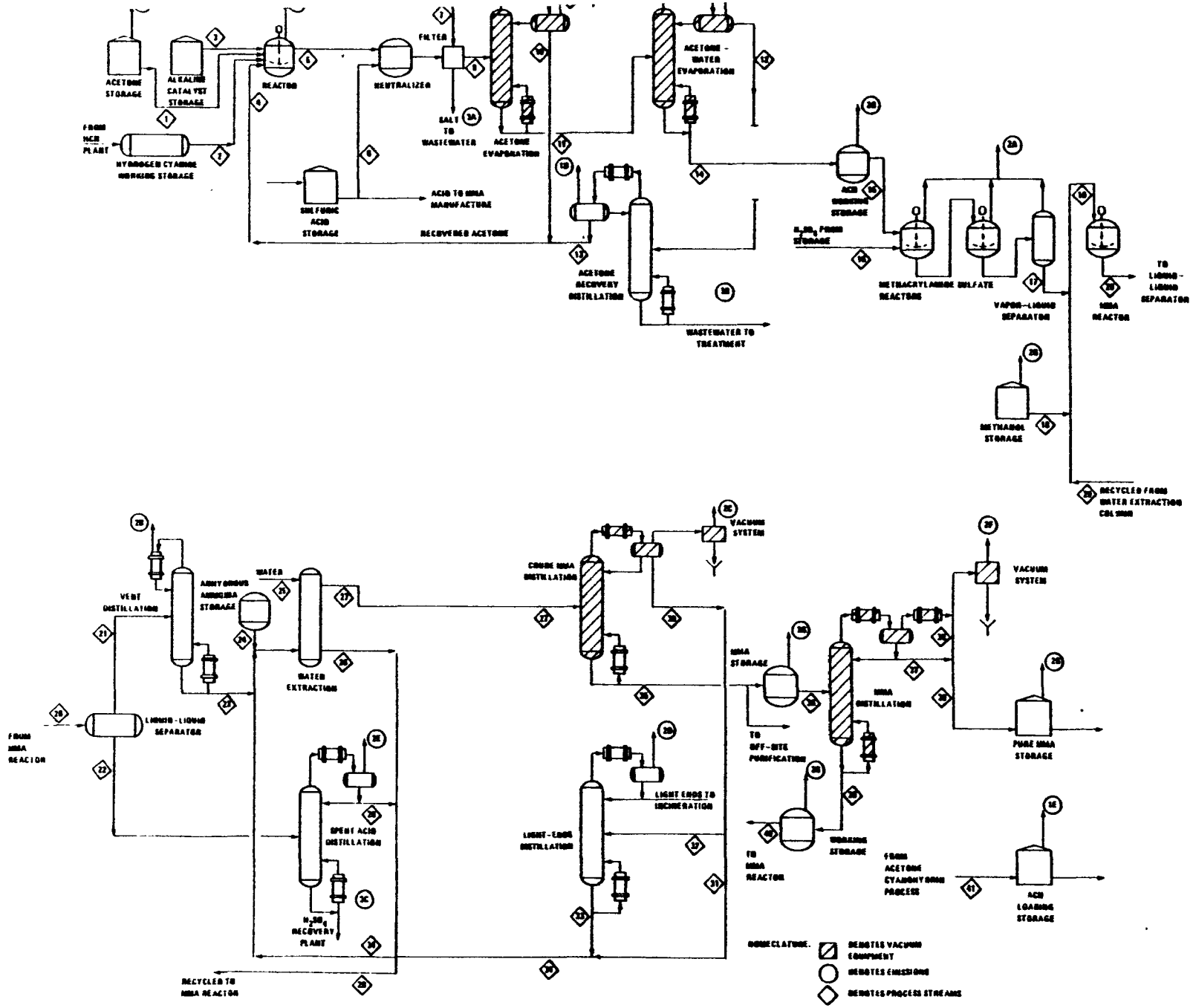

Figure 23. Flow diagram for the manufacture of methyl methacrylate.

APPENDIX A-2

Plastics Manufacture and Processing

Introduction

Occupational hazards in the plastics processing industry can generally be delineated into: 1) exposure to toxic chemicals, 2) injuries caused by mechanical or electrical machinery or accidents, and 3) fires. These hazards are discussed in the Plastics Industry Safety Handbook, prepared by the Society of Plastics Industry, 1973.

The plastics processing industry is vast and complex, due to an overlapping of activities within the industry. Although SIC 3079, Miscellaneous Plastics Products, is the SIC classification that most closely approximates the plastics processing industry, various plants classified under SIC groupings also manufacture plastics products (see Table 24).

A minimum of 6,000 companies in the United States produce basic materials; process or fabricate plastics into products or parts; or finish these goods by decoration or other means. It is impossible to estimate the number of companies using plastics that are customers for these materials and serives. Quite often, there is an overlapping of functions between industry and market, that is, the customer; automotive and packaging companies are among the largest processors of plastic products and parts. Similarly, an overlapping of functions within the industry exists; materials manufacturers also process and finish (Frados 1977).

The plastics processors, who turn the materials into secondary products, component parts, or finished end-products, are involved with several plastics processing methods; these are described in Table 25.

Basically, the potential sources of occupational exposures to toxic chemicals during plastics processing are:

1. Splashes of chemicals on skin and eyes when resins are handled.

TABLE 24. SIC CODES APPLIED TO THE PLASTIC PRODUCTS INDUSTRY

SIC Code	Title
3021	Rubber and plastics footwear
3041	Rubber and plastics hose and belting
3079	Miscellaneous plastics products
3451	Screw machine products (produced on a job order basis
3479	Coating, engraving, and allied services not elsewhere classified
3728	Aircraft parts and auxiliary equipment
3963	Buttons
3944	Toys and amusement, sporting, and athletic goods
3714	Motor vehicle parts and accessories

TABLE 25. DESCRIPTION OF PROCESSES EMPLOYED IN THE PRODUCTION OF PLASTIC PARTS

Process	Resin(s) Processed	Process Description
Blow molding	Thermoplastics	Blow molding is used to make hollow objects, including bottles drums, and toys. The resin is first extruded or injection molded into a thin cylinder called a parison. The parison is engaged in the mold and expanded to the configuration of the mold by compressed air forcing it against the mold faces. the molded part is cooled in the mold by cooling jackets and conveyed out of the mold. As the product gets more complex, it is sent to secondary stations for cropping, separating flash from the product, skiving, reaming, milling, drilling or decorating, printing, and labeling.
Extrusion	Thermoplastics	The molding powder or pellets are fed to a screw extruder which is heated externally by steam jackets. The molding powder or pellets are forced by a helical screw against the heated cylinder wall where they are replasticized to form a continuous plastic. At the end of the extruder, the continuous plastic is shaped by a die into rods, sheets, or tubes. When the products are ejected, they are soft and hot, and carried on conveyor belts or troughs until they have cooled sufficiently to handle. Cooling is accomplished by air blasts or water baths.
Injection molding	Thermoplastics & thermosets	The molding powder or pellets are placed in a hopper which feeds a small amount into a heating chamber. The heat supply in this chamber may be either direct (electric heater) or indirect (heated oil or steam-in jackets). In the heating chamber, the powder or pellets are converted to a molten viscous state. This viscous liquid is then forced under high pressure through a nozzle into a mold (injected into a mold). Once in the mold, the plastic cools to a solid shape. Non-contact cooling water is circulated through channels in both the injection equipment and product mold. The mold is then opened and the finished piece is ejected from the press. For thermosets, the cooling process is omitted and the product is cured in the mold under heat and pressure. The machines are self-contained.

TABLE 25. (Continued)

Process	Resin(s) Processed	Process Description
mpression lding	Thermosets	Compression molding is the most common method of molding thermoset plastics. The molding powder or pellets are placed in open mold cavities, and the face of the mold is pressed down. Pressure and heat are then applied for a specified amount of time for curing and shaping of the product. Mold heating is accomplished by steam, gas, oil, electronic coils, or electric cartridge element. The processes are usually fully automated. Automatic compression-molding presses perform all of the routine molding processes of thermosetting plastics: measuring the charge of the molding powder or preforms, preheating it, loading into cavities, closing the mold, opening it for breathing (gas expulsion), closing it for a predetermined curing period, opening it and ejecting the finished pieces, blowing the flash from the cavities and plungers, and repeating the cycle over again.
nsfer ding	Thermosets	Transfer molding is similar to compression molding, in that the thermoset plastics are cured in the mold under heat and pressure. The molding pellets or powder are first placed in a pressure chamber and heated to a plastic state by contact with the heated surface of the pressure chamber. The plastic then flows through a narrow passage, which may be heated, and is forced into a hot, closed molding cavity. High pressure and heat are applied to the filled cavity to set (cure) the formed plastic material. The finished article is ejected from the mold cavity and air-cooled.
endering	Thermoplastic*	Calendering is used to process thermoplastics into sheeting or film, and to apply a plastic coating to textiles or other supporting materials. The process involves passing the film or sheeting between a series of 3 or 4 large, heated revolving rollers, which squeeze the material between them into a sheet or film. Process cooled at 340°F.

TABLE 25. (Continued)

Process	Resin(s) Processed	Process Description
Casting	Thermoplastics & thermosets	A liquid monomer-polymer solution is poured into an open or closed mold, where it finishes polymerization into a solid. Film and sheet can also be cast directly into a flat, open mold, casting onto a sheet or belt, or by precipitation in a chemical bath. In comparison to molding, pressure is not required, the starting material is usually a liquid, and the liquid is often a monomer, rather than the polymers used in molding. Casting of PVC film involves forming a solution of the film ingredients, casting the solution on a suitable substrate, evaporating the solvent, and winding the resultant film on rolls.
Coating	Thermoplastics & thermosets	Thermosets and thermoplastics may be used as coatings for metals, wood, paper, fabric, leather, glass, etc. Methods ma include: knife or spread coating, spraying, roller coating, dipping, and brushing. Calendering of a film to a supporting material is considered a form of coating. Powder plastics ar coated by fluidized bed coating and electrostatic spray coating. In the former, the object is heated and dipped in a dense-phase fluidized bed of powdered resin; the resin adhere to the heated object, which is finished by further heating.
Foam processing		Foam plastic parts are manufactured by many processes: casting, calendering, coating, rotational molding, blow molding, injection molding, and extrusion. Most commonly, blowing agents are incorporated in the resin and are subsequently decomposed under heat to generate the gases needed to create the cellular structure and for various controls to accommodate the foaming action. When polystyrene beads are used to produce cups, picnic dishes, etc., the "steam-chest" molding method causes the beads to expand and fuse together.

TABLE 25. (Continued)

Process	Resin(s) Processed	Process Description
ninating	Thermosets	High pressure and temperature are often used in lamination. The thermosetting plastics are used to bind the reinforcing materials that comprise the body of the finished product; the reinforcing materials may be cloth, paper, wood, or glass fibers and the products may be flat sheets, rods, or tubes. In producing flat sheets, impregnated sheets are stacked between 2 plates and subjected to high heat and pressure; the process cures the plastic and produces a single material. For producing tubing, resin-treated reinforcing sheets are wrapped, under tension and/or pressure around a heated rod, and subsequently cured in the oven. In producing formed shapes, the reinforcing material is cut into pieces, and fitted into the mold to cure under heat and pressure.
ational ding	Mainly thermo-plastics; some thermosets	Intended primarily for manufacture of hollow objects, it involves the placement of a polymer into a warm mold, which is rotated in an oven about 2 axes. During heating if the polymer is powdered material, a porous skin is formed on the mold surface; this gradually melts as the cycle progresses to form a homogeneous layer. When molding a liquid, the material flows and coats the mold surface until it gels, at which time flow ceases. After cooling, the molds are opened for removal of the molded parts.
ction ection ding	Thermoplastics & thermosets	Also termed liquid injection molding, this process has been primarily for molding polyurethane elastomers or foams into products - solid integral skins and cellular cores. Two or more pressurized reactive streams are impinged together under pressure in a mixing chamber; the resultant mixture is injected, under low pressure, into the mold where the reaction begins and continues until the liquid mixture solidifies into the product.

TABLE 25. (Continued)

Process	Resin(s) Processed	Process Description
Thermo-forming	Thermoplastic sheet	The material is heated (225 - 325°F) until softened; the hot and flexible material is forced against mold contours by mechanical or pneumatic means, and the products are cooled.
Sintering		Granules of the raw plastic are first compacted under pressure, then fused by application of heat. Once fused, they are further formed by heat and pressure.
Plastisol processing		Plastisols are dispersions of homopolymers and copolymers of vinyl chloride in conventional polyvinyl chloride plasticizers. Temperatures required for fusion are 300 - 400°F for homopolymers and 250 - 300°F for copolymers. Further heating of the polymer produces a gel and fuses the ingredients into a homogeneous melt which becomes a continuous solid upon cooling. Plastisols are processed by 1) dipping, 2) slush molding, 3) rotational molding, 4) spread coating, 5) cavity and in-place molding, 6) spraying, 7) pressure molding, and 8) strand coating.
Reinforced plastics processing	Thermoplastics thermosets	Reinforced plastics are composites in which resins, as binding material, are combined with reinforcing materials, usually fibers. These composites can be injection molded, rotationally molded, extruded, or cold stamped. Unique to reinforced plastics are processes such as pultrusion, for making continuous shapes, by pulling resin-impregnated fibers through shaping dies and curing operations (a counterpart to thermoplastic extrusion) and filament winding, for making cylindrical shapes by winding resin-impregnated fibers around a mandrel, curing the part and removing the mandrel.

* Thermoplastic resins can be repeatedly softened by heat, reshaped, and then cooled to regain their solid state. Thermoset resins, once solidified and cured (polymerized), cannot be remelted without polymer degradation.

Sources: Agranoff 1980-1981.
Kline 1953.

2. Accidental flash contact.

3. Accidental dust contact during cutting or machining operations.

4. Inhalation of oxidation or pyrolysis products.

5. Inhalation of materials from fugitive leaks in processing equipment.

6. Inhalation of gases escaping from opening or closing the molds.

7. Inhalation of gases escaping from loading or unloading operations.

8. Inhalation of gases released during the cooling process.

9. Unexpected sudden release of pressure in pipelines containing chemicals.

10. Entry into reactors, where there may be high vapor concentrations.

The plastics processors are the mainstay of the industry. They turn the plastics materials into secondary products, e.g., film, sheet, rod, tube, etc., component parts, or finished end-products. Processors can be classified according to whether they are processing on a custom basis for end-users, "custom processors," or whether they represent captive (in-house) production facilities for manufacturers who use plastics parts in large volume, "captive processors." Plastics processors can also be classified, more specifically, according to the type of processing they employ (Frados 1977).

To assess the occupational exposure in the plastics processing industry, three factors must be considered. These are:

1. The plastic material itself, the modifying agent used and its toxicity.

2. The operating parameters of the processing techniques employed.

3. The degree of automation of the processes employed.

Of the three, the last, the degree of automation, is the most difficult to generalize or characterize, due to rapidly increasing automation encountered in the plastics industry. Nevertheless, the degree of automation remains an important factor in the determination of employee exposure in the industry. It is plausible to generalize that the greater the degree of automation, the less the potential for occupational exposure to toxic chemicals during plastics processing, as less worker contact is involved. Manually operated equipment is still in use in the plastics industry, especially by small companies.

Some resins pose health hazards due to their inherent makeup during processing operations. Examples are urea-formaldehyde and melamine-formaldehyde resins. During processing, these partially cured resins will undergo complete curing, accomplished by elevated temperatures and pressures, and accompanied by the liberation of some free formaldehyde. Formaldehyde is highly irritating to the eyes, nose, and throat, and it is important that adequate ventilation be provided in the occupational setting. Exposure to formaldehyde may also occur during machining and cutting operations, when resin dust is produced (Society of the Plastics Industry 1973).

In contrast, polyethylene resins are physiologically inert in themselves. If adjuvants, i.e., antioxidants, are used and if they are physiologically active (extractable by body fluids), it is their toxicity that must be considered (Society of the Plastics Industry 1973).

The operating temperatures at which plastics are processed are very close to the degradation temperature of the resin(s) employed. Therefore, the operating temperature during a process is entirely dependent on the resin employed.

Some process operations pose more of a potential for occupational exposure than others. For example, during compression molding of thermoset resins, specifically, melamine, urea, or

phenolics, a condensation-polymerization reaction occurs in the molds. This results in the formation of by-product gases, which must be vented during molding to prevent the formation of bubbles or distortions in the end products. Whereas transfer and injection molds have vents, compression molds are opened during curing to release these by-product gases (see Table 26). If the work area is not adequately vented, there exists a large potential for exposure to possibly noxious fumes during compression molding (Agranoff 1980-1981).

Operating parameters are important in assessing occupational exposure, because even relatively inert materials, when sufficiently heated in excess of the appropriate processing range, may pose a potential for hazard. For example, polyethylene, at sufficiently high temperatures, will pyrolyze, yielding materials which are irritating to the eyes and respiratory tract (Society of the Plastics Industry 1973). The following section further discusses exposure to noxious materials during plastics processing.

Possible Exposure to Noxious Fumes During Processing

Most plastics are normally processed within the temperature range of 140 - 340°C; within this range, especially at the upper end of the range and depending on the polymeric material and the fabrication process, fumes and gases are very often observed. The fumes can include carbon monoxide, formaldehyde,and acrolein, and are generally low in concentrations, except at the very top of the temperature range. These fumes are adequately removed by appropriate precautionary measures, such as vents.

While some of the fumes are produced or formed by pyrolysis, others are formed by oxidation. It is also possible that there may be a release of impurities, either from the plastic material, or from one or more of the additives. The fumes released will differ from one plastic to another, but almost all will release carbon monoxide in the temperature range of 140 - 340°C during

TABLE 26. POTENTIAL FOR OCCUPATIONAL EXPOSURE DURING PLASTICS PROCESSES

Plastics Process	Exposure Potential
Compression molding	• Potential for exposure to flash, to vapors, and the material itself[a]. • Once ejected from the mold, the finished product is hot and residual gases from insufficient curing will be released and may pose a potential for inhalation exposure. • Potential for exposure to particulate emissions when molds are loaded with molding powder or pellets. • Potential for exposure during "breathing the mold" when the mold is opened to release the by-product gases formed during curing. It is not known if the process is vented. • Inhalation exposure to gases released due to leaks in equipment.
Transfer molding	• Potential for exposure exists when venting by-product gases during curing, if the work area is not properly ventilated. • Once ejected from the mold, the finished product is hot; any residual gases from insufficient curing will be released. • The pressure chamber, transfer channels, and molding chamber may have leaks through which residual gases may pass. • Particulate emissions may occur when loading the pressure chamber with molding powder or pellets. • Potential for exposure to closing dies, to flash, to heat, and to the material itself[a].
Blow molding	• When the compressed air exits, the mold may contain some residual gases. • Potential for exposure to formaldehyde gases may exist when conveying the parison to the mold, when conveying the product out of the mold, especially if it is hot, and when initially conveying the molding pellets or powder to form the parison (particulate emissions). • Residual gases may be released due to leaks in the molding equipment. • Potential for exposure to spew of molten plastic[a].

TABLE 26. (Continued)

Plastics Process	Exposure Potential
Extrusion	• If cooling is by air blasts, exposure to gases is possible. • Potential for exposure when the molding powder or pellets are conveyed from the hopper to the extruders (particulate emissions) or when the hot product is conveyed to the cooling area. • Potential for exposure to gases from leaks in the extruder.
Injection molding	• Potential for exposure to gases when molds are opened, especially thermosets. By-product gases from curing will be released. • Gases may escape through leaks in the heating chamber and molds and may pose a potential for exposure. • Particulate emissions may occur when the molding powder or pellets are added to the hopper.
Casting	• Requires controlled heating and thus operation is usually completely enclosed. • Casting of PVC film may involve exposure to solvent.
Coating	• During spraying, atomized plastic particles present hazards due to toxic and explosive characteristics of the materials; ventilation is required. • Amount of material lost during spraying operations is three times that actually deposited. High inhalation exposure potential).
Foam	• The potential for inhalation exposure to the gases released upon heating exists. • Exposure to gas during aging of product is possible.
Laminating	• Dermal contact with liquid varnishes or resins poses potential for exposure, especially when pressure is applied. • If work area is not properly ventilated, the potential for exposure to solvents released during curing exists.

TABLE 26. (Continued)

Plastics Process	Exposure Potential
Potential molding	• Potential for exposure exists if molds are not sufficiently cooler; cooling is claimed to be the most ignored portion of the entire cycle.
Reaction injection molding	• Potential for exposure exists if the mold is opened before complete curing has occurred.
Thermoforming	• Potential for exposure exists if the molds are not sufficiently cooled.

Sources: Society of the Plastics Industry 1973.
Frados 1976.
Modern Plastics Encyclopedia 1980-1981.

processing. Aldehydes can also be released from certain polymeric materials. The concentrations of these fumes to which workers would be exposed, in the absence of proper ventilation, are dependent on workers' positions in relation to the source of the fumes, i.e., processing equipment (Edgerley 1981).

Edgerley (1981) reported that carbon monoxide evolved at temperatures from about 200°C and above, when 12 polymeric materials were tested. In his experiments, Edgerley was careful to point out that while the 'onset of CO' temperature is exceeded by the maximum recommended temperature in many cases, it does not mean that oxidative pyrolysis was taking place to any serious extent (see Tables 27 and 28). Evolution of formaldehyde from polyethylenes tested increased with temperature to a maximum at or above 280°C, whereas evolution of acrolein was significant above 140°C (see Table 29). Above this temperature, a rapid increase in the rate of evolation was reported.

Gases other than carbon monoxide, formaldehyde, and acrolein can also be released during plastics processing; benzene may evolve in the case of certain polymers containing aromatic ring structures. Table 30 presents information on the gases evolved from plastics manufacture, along with their concentrations and TLV.

Results of atmospheric sampling tests performed close to certain types of plastics processing equipment are presented in Table 31. Sampling devices were placed close to points where polymers emerged into the open air, and also in the operator's work area. The presence of carbon monoxide, acrolein, and formaldehyde was confirmed, especially at the high end of the processing temperature range at or near the point at which the polymer emerges into the air. As adequate ventilation was provided, the potential for exposure was diminished.

In addition to the evolution of gases during plastics processing, the exothermic nature of the oxidation of organic polymers to carbon monoxide poses the potential for problems in

TABLE 27. EVOLUTION OF CARBON MONOXIDE IN THE UPPER PART OF THE PROCESSING TEMPERATURE RANGE (PI

Polymer	200°C	250°C	260°C	270°C	280°C	290°C	300°C	310°C	320°C	330°C	340°C	350°C	400°C
LD Polyethylene	0	50	50	50	70	120	210	390	800	3000	5000	5400	250(
HD Polyethylene	20	30	50	50	60	90	100	100	100	150	130	50	1200(
EVA (4% VA)	0	100	100	120	160	180	410	800	5000	6000	7000	6000	250(
Polypropylene	20	90	100	150	250	410	550	700	950	1100	1100	800	15(
PVC	0	40	50	100	100	100	100	110	110	110	120	120	12(
Polystyrene	0	10	20	20	20	30	30	40	40	50	70	100	80(
PMMA	0	0	0	0	10	40	70	80	80	100	100	90	3(
Polycarbonate	0	0	0	0	0	0	0	0	0	20	20	20	24(
PET	0	0	0	40	50	80	100	120	150	190	230	300	160(
Nylon 6 6	20	20	30	30	30	30	50	50	70	70	80	200	140(
ABS	0	0	0	0	0	0	0	20	20	30	30	30	12(
Wood (fir)	0	120	250	500	2000	3800	4600	5000	2700	1300	150	150	40(

Source: Edgerley 1981.

LE 28. CARBON MONOXIDE EVOLUTION IN THE MELTING AND PROCESSING TEMPERATURE RANGE OF VARIOUS PLASTICS

ial	Tm (°C)	Tg (°C)	Compression Molding (°C)	Injection Molding (°C)	Extrusion (°C)	Onset of CO Evolution	CO can Reach 500 ppm (°C)
yethylene	110 - 130	90 - 105	140 - 220	205 - 290	220 - 310	200	375
yethylene	120 - 140		150 - 230	150 - 315	150 - 340	200	375
% VA)	90		50 - 150	120 - 220	150 - 220	220	305
opylene	176		170 - 235	205 - 290	220 - 310	200	290
		75 - 105	140 - 220	165 - 195	150 - 210	240	450
yrene		100	130 - 205	165 - 260	190 - 255	240	380
		90 - 105	150 - 220	165 - 260	205 - 260	280	never
rbonate		150	150 - 325	250 - 345	230 - 290	330	410
	258			290 - 315	230 - 320	280	375
6 6	265			270 - 325	270 - 330	200	355
		88 - 120	165 - 235	195 - 275	200 - 235	310	420

ocessing temperatures were obtained from the Modern Plastics Encyclopedia 1978.

: Edgerley 1981.

TABLE 29. EVOLUTION OF ALDEHYDES FROM HEATED POLYOLEFINS IN AIR

Formaldehyde (TLV 3.0 mg/m^3 or 2.0 ppm)

	170°C	200°C	240°C	280°C	320°C	360°C
LDPE	0.1 (0.1)	0.3 (0.2)	0.5 (0.4)	1.9 (1.5)	0.7 (0.6)	0.6 (0.5)
HDPE	-- --	0.3 (0.2)	0.5 (0.4)	0.6 (0.5)	0.5 (0.4)	0.6 (0.5)
PP	-- --	0.7 (0.6)	0.6 (1.3)	1.5 (1.2)	0.7 (0.6)	0.6 (0.5)

Acrolein (TLV 0-25 mg/m^3 or 0-0 ppm)

	170°C	200°C	240°C	280°C	320°C	360°C
LDPE	None detected at these temps.			0.0 (0.4)	0.9 (0.8)	02.8 (5.5)
HDPE	-- --	0.4 (0.2)	0.6 (0.3)	3.6 (0.5)	4.4 (0.9)	4.6 (2.0)
PP	-- --	0.0 (0.04)	0.0 (0.04)	0.2 (0.0)	0.6 (0.3)	0.7 (0.7)

The concentrations are in mg/m^3 for 10g polymer averaged over 50 mm. The equivalent, in parts per million, appears in parentheses. All tests were carried out with a 5 sample in an unstated shallow well in a heated steel plate.

Source: Edgerley 1981.

TABLE 30. EVOLUTION OF CERTAIN GASES FROM PLASTICS AT THE MAXIMUM RECOMMENDED PROCESSING TEMPERATURE

Polymer	Temperature (°C)	Gas	Concentration (ppm)	TLV (ppm)
Polyvinylchloride	205	Hydrogen chloride	120	5
		Benzene	2	10
Polycarbonate	345	Benzene	trace<1	10
PET	345	Benzene	trace<1	10
Nylon 6.6	325	Hydrogen cyanide		10
		Ammonia	~60	25
		Nitrous fumes	trace 0.5	25
Acrylonitrile/ Butadiene Styrene (ABS)	275	Hydrogen cyanide	1	10
		Ammonia	5	25
		Nitrous fumes	trace<0.5	5
		Styrene	<50	100
Polystyrene	260	Benzene	trace<1	10
		Styrene	trace<50	100
EVA (4 percent VA)	220	Acetic acid	<5	10
		Vinyl acetate	<5	10
EVA (28 percent VA)	220	Acetic acid	25 ppm	10
		Vinyl acetate	<5	10

Source: Edgerley 1981.

TABLE 31. ATMOSPHERE ANALYSES NEAR PLASTICS PROCESSING MACHINERY

Processing Machinery	Plastic	Die Temperature	During Normal Running (ppm) Near Die	Operator's Area[a]	Idling, Cleaning, etc. (ppm) Very Close to Fumin Equipment
113.mm Extruder	LD Polyethylene	220	Carbon monoxide 30 Formaldehyde 0.7 Acrolein 0.02	Carbon monoxide 5	
		280	Carbon monoxide 70 Formaldehyde 1.1 Acrolein 0.1		Removal of screw: Carbon monoxide 2 Formaldehyde 2.0 Acrolein 0.2
Extruder coater (paper coating)	LD Polyethylene	295 300	Carbon monoxide 0		Die retracter: Carbon monoxide 4 Formaldehyde 0.1
		318 320	Carbon monoxide 1	Carbon monoxide 0	Die retracted: Carbon monoxide 7 (mean, peaks to 2 Formaldehyde 0.5 Acrolein 0.1
Film making	Polypropylene	220	Carbon monoxide 30 Formaldehyde 0.2 Acrolein 0.01	Carbon monoxide 0	
50. mm Extruder	Nylon 6.6	300	Carbon monoxide 10 Ammonia 6-10		Removal of screw[b] Carbon monoxide 1 HCN, ammonia both

[a]Taken at nose height as near as judged reasonable.

[b]After purging with polypropylene.

Source: Edgerley 1981.

occupational settings. This is because once the reaction has started, the rate can increase expontentially due to a rise in the temperature. Consequently, in situations where heat cannot be readily removed, polymer plastics caught on die-lips or on a hot knife will rise in temperature and will generate more gaseous oxidation products than might be expected (Edgerley 1981).

Third Tier Manufacture

Finishing, decorating, and assembly of plastics end products are accomplished either in-house, by the plastics processor, or by companies specializing in various finishing techniques. Such a specialty may be the metallizing of plastics products to impart a chrome-like appearance, or the large volume printing of plastics film and sheet (Frados 1977). Finishing methods employed in the plastics industry are described in Table 32.

Hazards encountered in the finishing, assembly, and decoration of finished plastics products are often similar to those encountered during the processing of plastics. This is especially true of finishing and assembly, as these do employ the application of heat. This exposure to hazardous gases/vapors is certainly possible, if adequate ventilation is not provided in occupational settings.

Decoration of finished and assembled parts involves use of a variety of chemicals to impart different touches to the end product. Chemicals such as "fiber-reactive" disperse dyes, etchants, and adhesives are used, and worker exposure to these chemicals is possible if protective measures are not employed. Certain decoration techniques such as in-mold decoration are performed during the processing encountered in second tier manufacture. Here, a product emerges from the mold completely decorated.

TABLE 32. DESCRIPTION OF PROCESSES EMPLOYED IN THE ASSEMBLY, FINISHING, AND DECORATION OF PLASTICS PARTS

Adhesive bonding	Most often the most efficient, economical, and durable method of plastics assembly. 1. Elastomeric adhesives used to assemble elastomers. Solvent-based, applied by spray or brush. Require ventilation to eliminate solvent hazards. 2. Thermoplastic resins used with other plastics. Solvent-based or applied to parts as melts at elevated temperatures. 3. Thermosetting resins are most versatile, durable, and environmentally resistant adhesives. Curing involves heat or mixture of two components. Single component, room-temperature curing systems are growing rapidly in use. Automated glue-guns or pressure time applicators. 4. Miscellaneous adhesive types are available as water-based systems. Methods 1. Brushing - labor-intensive. 2. Dipping - difficult with solvent cements. 3. Roll coating - efficient for uniform coating of areas. 4. Spraying - rapid method for large areas, also imparts preciseness to small areas. Requires venting and operator protection. 5. Stencil/screening - not suited to solvent-type adhesives. 6. Pressure - time applicators impart preciseness to small area application. Can be factored into automated production lines.
Electromagnetic bonding	Based on induction heating; magnetic materials develop heat loss when subjected to high frequency alternating current source. Equipment consists of induction generator, water-cooled copper work coils, fixturing, and electromagnetic material.
Friction joining	Heat for melting plastics materials is generated by friction. With parts held under pressure, one part is made to move relative to the other; sufficient thermal energy is generated to form a melt layer. One part has to be thermoplastic. Movement of the part can be rotational (spin welding) or rapid back-and-forth displacement of limited amplitude (vibrational welding).

TABLE 32. (Continued)

Magnetic heat sealing	Radio freuqency (RF) magnetic fields are utilized to melt a thermoplastic layer containing heat-generating powder, situated between two bodies to be joined. Heat generation by a ceramic powder, i.e., magnetic iron oxide, which responds to the RF magnetic field. Powder can be incorporated into molded component to be sealed into hot melts, liquid adhesives, etc.
Mechanical fastening	Used to join plastic to plastic, plastic to metal, or to join dissimilar plastic materials. They are made from metal, plastic, or a combination. Screws, nuts, inserts, rivets, and sheet metal screwreceivers are examples of mechanical fasteners.
Radio frequency sealing/embossing	RF energy is used to heat materials that are poor conductors of electricity (dielectrics). When used in conjunction with some mechanical device to apply pressure, the sealing, embossing, or flow molding of these materials is accomplished. Equipment consists of RF generator, a press to provide pressure while the RF energy is applied, and tooling to direct or apply the energy in the desired areas or patterns.
Thermal sealing/ bonding	Method of joining two parts through the direct application of heat or through the generation of frictional heat by gross motions of the parts; pressure also used. Film sealing methods 1. Hot-bar sealers, temperature of the bar, pressure, and dwell time are all interrelated. 2. Rotary sealers, used for continuous machine-direction seals; a modification of the hot-bar sealer. 3. Bank seals, consists of two moving metal loops, working together and forming a nip into which film layers are fed. 4. Impulse sealers, a version of the bar sealer.
Thermal sealing/	Thick part joining 1. Hot plate joining, edges pressed against plates until melt is formed, then pressed together and cooled. Manual or automatic.

TABLE 32. (Continued)

	Automatic
	2. Rotary joining, stations provided for clamping, heating, joining, and cooling and unloading. Manual or automatic.
	3. Groove joining, used to join flat sheets of plastic to the end of a plastic pipe.
	4. Hot gas welding, uses gaseous heat source to melt the areas of plastics to be joined and a plastics welding rod.
Ultrasonic	Becoming preferred method for plastics assemble; parts are clamped or scanned under vibrating horn. Highly localized frictional heating results as plastic joint or horn interfaces, resulting in a thin layer of molten plastic, which subsequently solidifies upon cooling.
Decorating and Printing	
Dyeing and printing	Aqueous system and "disperse" class of textile dyes used. Dye bath is from 150 - 200°F. Parts are degreased, placed in dye bath, removed, rinsed, and dried. Exposure may occur by contact with dyes.
Electroplating	Chemical etchants used to bond the metal deposits on plastic surface. Preplating treatment involves application of a conductive coating, cleaning with acidic, alkaline, or even a neutral detergent. Etchants are usually strongly acidic, oxidizing solutions often containing high concentrations of chromium trioxide.
Embossing	Thermoplastic sheet is textured with a pattern imparted by an embossing roll pressing against a backup roll under controlled preheating and postcooling conditions. Process parameters involve 1) product compounding and related properties, 2) sheet thickness, 3) preheat temperature, 4) embossing roll design, and 5) postemboss cooling.
Flock coating	The system is a continuous web line incorporating letoff, knife overoll coaster, flock machine, vacuum blanket, curing oven, cooling station, vacuum brush, and rewind. Final procesing phase, curing and drying, involves temperatures from 275 to 325°F of plastisol adhesives.

TABLE 32. (Continued)

Hot stamping	A dry one-step process, it is versatile and uses heat and pressure to transfer a pigmented material to the plastic. Processing equipment consists of coated film, hot stamp press, and heated platen with a die or roller. Most hot stamping foils and decals transfer at temperatures between 250 - 375°C within one second.
In-mold decoration	Thermoplastics can be decorated by insertion of printed film in an injection mold prior to closing, and then injecting a molding compound compatible with the film material. Thermosets are decorated by first going through a normal compression molding cycle and interrupting before the cure is complete. The foil or overlay is then placed in contact with the partially cured piece, the mold is closed, opened for de-gas, and re-closed for proper cure.
Ion plating	Traditional ion plating is a natural outgrowth of sputtering. By combining a high-rate evaporation source with an ionized cloud of argon gas, the evaporated particles become ionized. Gasless ion plating involves application of a high rate evaporation source, in combination with an RF field and a die bias.
Painting	Methods: 1) dip coating, 2) die dyeing - often automated, 3) flow coating, similar to dip coating; parts are racked on a spindle or bar which is rotated while lacquer is applied.
Printing	Most common are flexography and gravure. Flexography prints by transferring images from a flexible, raised printing plate onto a smooth transfer roll, which carries the impression onto a web of plastics. Gravure transfers ink from cells etched or engraved in a metal cylinder onto material to be printed. The cells pick up the highly volatile liquid ink from a fountain; a doctor blade then wipes excess ink from the roller before the actual printing stop is performed.
Sputtering	New water pollution-free method of vacuum plating decorative plastics requiring corrosion-resistant properties. Base coats are applied by spraying or flow-coating, and are baked at 175 to 250°F. Sputtering is performed in a vacuum chamber, but unlike conventional vacuum metalizing, the metal is not melted or evaporated. Sputtered metal atoms, knocked off by the impact of ionized atoms, are ejected from the target and deposited on the plastic part.

TABLE 32. (Continued)

Vacuum metalizing	Metal or other material is deposited on plastic material. Aluminum is used to impart lustrous finish to objects. Vacuum metalizing chamber is the heart of the process. Four steps are involved; loading, base coating, vacuum coating, and top coating. Base coating seals pores and reduces outgassing. Outgassing increases with temperature rise and diminishing absolute pressure. Parts are baked in connection or infrared ovens.
Machining	Used in place of molding. Involves turning, drilling, end milling, face milling, power bank sawing, and tapping. Machining can also be performed with lasers.

Source: Agranoff 1980-1981.

APPENDIX A-3

Lubricants and Hydraulic Fluids

Introduction

This industry comprises two parts: petroleum refining and synthetic lubricant manufacture. The former is addressed here. Synthetic lubricant manufacture is a subset of the organic chemicals industry, discussed in Section 1 of this Appendix.

Processes

The processes herein are actually steps, and all are required to produce lubricants from petroleum.

DESALTING

Removal of inorganic salts by chemical for electrostatic methods. Crude oil salts foul heat exchangers, corrode distillation units, and increase furnace coking.

ATMOSPHERIC DISTILLATION

Crude oil is separated into light products and other fractions. These are sent elsewhere for further processing (straight-run gasoline, naphtha, white-water distillate, and fuel oil). Atmosphere tower bottoms (reduced crude) is charged to the vacuum tower for further distillation.

VACUUM DISTILLATION

Separates the wax distillate and cylinder stock at a low temperature so as not to decompose or crack the lubricating fractions. Fuel oil is a by-product of vacuum distribution. The wax distillate is charged to the dewaxing unit and the cylinder stock is charged to the deresin/deasphalt unit.

DERESINING/DEASPHALTING

Propane solvent is used to deresin and/or deasphalt the cylinder stock. Asphalts occur as asphaltene crudes. Resins occur in parafin or low-alsphaltic cylinder stocks. The propane solvent is recovered and reused.

DEWAXING

Solvent dewaxing with MEK and toluene is the most common approach to dewax lube oils. MEK crystallizes the wax within the oil and toluene dissolves the oil. The wax is removed through solvent injection and chilling. Both wax solution and oil solution are distilled to remove, recover, and reuse the solvent. Dewaxing the wax distillate results in neutral stock ($\sim$ SAE motor oil). Dewaxing the cylinder stock results in bright stock ($\sim$ SAE 70 motor oil).

Dewaxing results in oil-free wax and wax-free oil.

SOLVENT EXTRACTION

Solvent extraction removes compounds that cause low viscosity indexes. Typically, chlorex, nitrobenzene, phenol, furfural, or benzene are used with SO_2. The solvent is removed, reclaimed, and reused from the improved oil (raffinate) and the extract.

FILTRATION

Bauxite is the typical filter medium used to remove undesirable asphalts and resins not previously removed in the deasphalting/deresining step. Filtration is also used as a simple finishing step. The bauxite is washed with naphtha, steamed, and then regenerated by burning of the adsorbed material and reused. Some refiners use hydrogen and a catalyst (Lydrocracking) instead of bauxite filtration to improve the quantity and quality of the lubricating oil.

BLENDING/ADDITIVES

Additives are used according to the severity of the operating conditions for which the lube oil is intended and the quality of the base lube oil. Additive functions include: antioxidant, anticorrosive, antirust, extreme pressure, antifoam, antiwear, viscosity improver, pour pt. temp. depressant, detergent, dispersant, antisquawk, and antichatter.

A general process flow diagram of lubricant manufacture is presented in Figure 24.

Exposure Potential

Tables 33 and 34 summarize the exposure potential of each process, and the rank indicates the relative significance of each source.

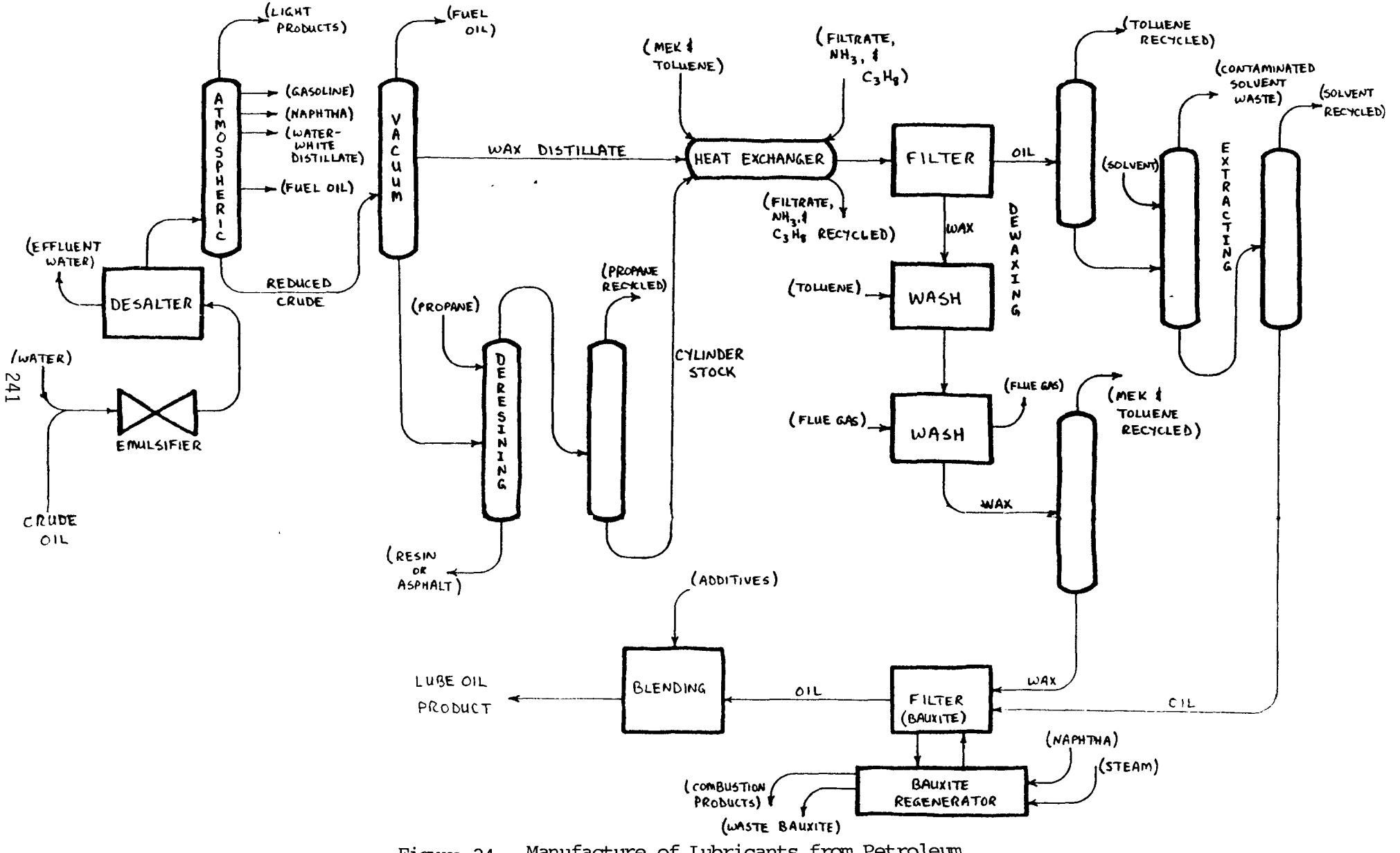

Figure 24. Manufacture of Lubricants from Petroleum

TABLE 33. POTENTIAL INHALATION EXPOSURE FROM MANUFACTURE OF LUBRICANTS

Priority	Unit Operation	Type of Exposure
0	Atmospheric Distillation leaks, pressure relief vents	Inhalation
2	Vacuum Filtration regenerating bauxite filters with naphtha and steam hydrocarbon and particulate emissions	Inhalation
3	Dewaxing flue gas used to dry filter cakes hydrocarbon and particulate emissions	Inhalation
4	Deasphalting or Deresining extractive distillation leaks, pressure relief vents	Inhalation
5	Dewaxing distillation to separate out solvents leaks, pressure relief vents	Inhalation
6	Solvent Extraction distillation columns leaks, pressure-relief vents	Inhalation
7	Vacuum Distillation pressure relief vent minor pince pressure will be monitored	Inhalation

TABLE 34. POTENTIAL DERMAL EXPOSURE FROM MANUFACTURE OF LUBRICANTS

Priority	Unit Operation	Type of Exposure*
1	Desalter large water waste containing impurities	Dermal
2	Vacuum Filtration washing bauxite filter with naphtha contaminated naphtha	Dermal
3	Dewaxing washing filter cake with toluene contaminated toluene	Dermal
3	Bottoms of any fractionating towers containing residuals	Dermal
4	Dewaxing spent extracting solvent and leaks toluene	Dermal
4	Solvent Extraction spent extracting solvent and leaks	Dermal
4	Deasphalting or Deresining spent extracting solvent and leaks propane	Dermal
5	Vacuum Distillation barometric condensers used to create a vacuum water will be contaminated with oil	Dermal
6	Blending and Packaging highly automated spillage of additives	Dermal
1	Dewaxing sent to landfill scraping out heat exchanger tubes	Dermal

TABLE 34. (Continued)

Priority	Unit Operation	Type of Exposure*
2	Deasphalting or Deresining solid waste-asphalts and resins may be reused to make fuel oil	Dermal
3	Dewaxing wax filter cake will be used elsewhere very valuable	Dermal
4	Vacuum Filtration contaminated spent bauxite filters sent to landfill	Dermal
5	Bottom products from distillation columns may be landfilled contains heavy residues	Dermal

* May have inhalation exposure also depending on volatility of the liquids.

APPENDIX A-4

General Manufacturing Processes

Introduction

Processes inherent to all manufacturing industries can only be very generally characterized. The wide variety of processes and equipment in use necessitates a generic approach to evaluation of these exposure sources. When using these definitions to evaluate specific processes, try to make common-sense associations. For example, exposure via dyeing may be likened to wet mixing and open-surface tanks.

Processes

Abrasive blasting. Abrasive blasting equipment may be automatic or it may be manually operated. Either type may use sand, steel shot, or artificial abrasives. The dust levels of workroom air should be examined to make certain that the operators are not overexposed.

Abrasive machining. An abrasive machining operation is characterized by the removal of material from a workpiece by the cutting action of abrasive particles contained in or on a machine tool. The workpiece material is removed in the form of small particles and, whenever the operation is performed dry, these particles are projected into the air in the vicinity of the operation.

Assembly operations. Improper positioning of equipment and handling of work parts may present ergonomic hazards due to repeated awkward motion resulting in excessive stresses.

Bagging and handling of dry materials. The bagging of powdered materials (such as plastic resins, paint pigments, pesticides, cement, and the like) is generally accompanied by the generation of

airborne dusts. This occurs due to the displacement of air from the bag spillage, and motions of the bagging machine and the worker. Conveying, sifting, sieving, screening, packaging, or bagging of any dry material may present a dust hazard. The transfer of dry, finely divided powder may result in the formation of considerable quantities of airborne dust. Inhalation and skin contract hazards may be present.

Drying ovens. Much of the equipment used for drying purposes is also used for "curing," i.e., the application of heat to bring about a physical or chemical change in a substance. The first major category includes direct dryers in which hot gases are in direct contact with the material and carry away any vaporized substances to be exhausted. Limited-use class includes radiant-heat and dielectric-heat dryers. The operation of the former is based on the generation, transmission, and absorption of infrared rays. The latter rely on heat generation within the solid when it is placed in a high-frequency electric field. Oven vapors (sometimes including carbon monoxide) are often released into the workroom, as are a variety of solvents and other substances found in the drying or curing products.

Gas furnace or oven heating operations (annealing, baking, drying, etc.). Any gas or oil fired combustion process should be examined to determine the level of by-products of combustion that may be released into the workroom atmosphere. Noise measurements should also be made to determine the level of burner noise.

Coating operations. Whenever a substance containing volatile constituents is applied to a surface in an industrial environment, there is obviously potential for any vapors evolved to enter the breathing zones of workers. If the volatiles evaporate at a sufficient rate and/or the particular operation is such that workers must remain in the immediate vicinity of the "wet" coating, these vapors may result in excessive exposures.

Ceramic coating. Ceramic coating may present the hazard of airborne dispersion of toxic pigments plus hazards of heat stress from the furnaces and hot ware.

Fabric and paper coating. The coating and impregnating of fabric and paper with plastic or rubber solutions may involve evaporation into the workroom air of large quantities of solvents.

Crushing and grinding. Size reduction refers to the mechanical reduction in size of solid particulate material. Two of the principal methods of achieving size reduction are crushing and grinding, but the terms are not synonymous. Crushing generally refers to a relatively slow compressive action on individual pieces of coarse material ranging in size from several feet to under one inch. Grinding is performed on finer pieces and involves an attrition or rubbing action as well as interaction between individual pieces of material. Pulverizing and disintegrating are terms related to grinding. The former applies to an operation producing a fine powder; the latter indicates the breakdown of relatively weak interparticulate bonds, such as those present in caked powders. Dry grinding operations should be examined for airborne dust, noise, and ergonomic hazards.

Grinding operations. Grinding, crushing, or comminuting of any material may present the hazard of contamination of workroom air due to the dust from the material being processed or from the grinding wheel.

Dry mixing. Mixing of dry material may present a dust hazard and should take place in completely enclosed mixers whenever air sampling indicates excessive amounts of airborne dust are present.

Welding - gas or electric arc. Welding operations generally involve melting of a metal in the presence of a flux or a shielding gas by means of a flame or an electric arc. The operation may produce gases or fumes from the metal, the flux, metal surface coatings, or surface contaminants. Certain toxic gases such as ozone or nitrogen dioxide may also be formed by the flame or arc. If there is an arc or spark discharge, the effects of radiation and the products of destruction of the electrodes should be investigated. These operations also involve hazards of high potential electrical circuits of low internal resistance.

Electron beam welding. Any process involving an electric discharge in vacuum may be a source of ionizing radiation. Such processes include electron beam equipment and similar devices.

Forming and forging. Hot bending, forming, or cutting of metals or nonmetals may have the hazards of lubricant mist, decomposition products of the lubricant, skin contact with the lubricant, heat stress (including radiant heat), noise, and dust.

Materials handling, warehousing. Work areas should be checked for levels of carbon monoxide and oxides of nitrogen arising from internal combustion engine fork-lift operations.

Metalizing. Uncontrolled coating of parts with molten metals presents hazards of dust and fumes of metals and fluxes in addition to heat and nonionizing radiation.

Molten metals. Any process involving the melting and pouring of molten metals should be examined to determine the level of air contaminants of any toxic gas, metal fume, or dust produced in the operation.

Open-surface tanks. Open-surface tanks are utilized by industry for numerous purposes. Among their applications can be included the common operations of degreasing, electroplating, metal stripping, fur and leather finishing, dyeing, and pickling. An open-surface tank operation is defined as "any operation involving the immersion of materials in liquids, which are contained in pots, tanks, vats, or similar containers." Excluded from consideration in this definition, however, are certain similar operations such as surface-coating operations and operations involving molten metals for which different engineering control requirements exist.

Paint spraying. Spray painting operations should be examined for the possibility of hazards from inhalation and skin contact with toxic and irritating solvents and inhalation of toxic pigments. The solvent vapor evaporating from the sprayed surface may also be a source of hazard, because ventilation may be provided only for the paint spray booth.

Plating. Electroplating processes involve risk of skin contact with strong chemicals and may present a respiratory hazard if mist or gases from the plating solutions are dispersed into the workroom air.

Pouring stations for liquids. Wherever "volatile" substances are poured from a spout into a container, some release of contaminants can be expected. In the paint and other coatings industries, solvents may be released when the contents of mills or mixers are poured into portable change cans. While ladles and change cans can be covered while being moved through a workplace, they must of necessity be open at the points where they are filled or discharged.

Punch press, press brake, drawing operations, etc. Cold bending, forming, or cutting of metals or nonmetals should be examined for hazards of contact with lubricant, inhalation of lubricant mist, and excessive noise.

Vapor degreasing. The removal of oil and grease from metal products may present hazards. This operation should be examined to determine that excessive amounts of vapor are not being released into the workroom atmosphere.

Wet grinding. Wet grinding of any material may produce possible hazards of mist, dust, and noise.

Wet mixing. Mixing of wet materials may present hazards of solvent vapors, mists, and possibly dust. The noise levels produced by the associated equipment should be checked.

This information was extracted from Olishifski et al. 1979.

Exposure Potential

Process Types:
- o Hot Operations
- o Liquid Operations
- o Solid Operations
- o Pressurized Spraying
- o Shaping Operations

References

Agranoff J. ed. 1980-1981. Modern plastics encyclopedia, October 1980 Volume 57, No. 10A. New York, NY: McGraw Hill Publications Company.

Barnett C, and Dewing J. Process for the preparation of adiponitrile by the ammoxidation of cyclohexane. U.S. Patent 3,818,066.

Carpenter BH. 1974. Vinyl chloride - an assessment of emissions control techniques and costs. U.S. Environmental Protection Agency. Prepared for RTP, North Carolina: EPA-650/2-74-097.

Cocuzza G, and Torreggiana G. 1979. Process for the preparation and the recovery of ethanolamines. U.S. Patent 4,169,856.

Doihyj SR, and Velenyl LJ. Process for producing pyridine or a substituted pyridine by ammoxidation of terpenes. U.S. Patent 4,140,690.

Edgerley PG. 1981. A study of the fume evolution at polymer processing temperatures. Plastics and Rubber Processing Applications. 1(1):81-86.

Ehrlich SW, and Chazanow SS. 1973. Hydrodealkylation. Patent No. 3,754,045.

Faith WL, Keyes DB, Clark RL. 1965. Industrial chemicals, 3rd edition. New York, NY: John Wiley and Sons, Inc.

Frados. 1977. The story of the plastic industry. New York, NY: The Society of the Plastic Industry.

Haberman CE. 1979. Method for producing amines from alcohols, aldehydes, ketones, and mixtures thereof. U.S. Patent 4,153,581.

Herrick EC, King JA, and Ouellette RP. 1979a. Unit process guide to organic chemicls industries. Ann Arbor, MI: Ann Arbor Science Publishers, Inc.

Herrick EC, King JA, Ouellette RP, and Cheremisinoff PN. 1979b. Amination processes pollutant discharges identification. An Arbor, MI: Ann Arbor Science Publishers, Inc.

Hosler P, and Baillie RA. Separation of liquid isophthalonitrile. U.S. Patent 3,801,620.

Hydrocarbon Processing. 1973. 1973 Petrochemical handbook issue. Houston, TX: Gulf Publishing Company.

Khan ZS, and Hughes TW. 1979. Source assessment: chlorinated hydrocarbons manufacture. Research Triangle Park, NC: Monsanto Research Corporation. Prepared for Environmental Protection Agency, Industrial Environmental Research Laboratory. NTIS PB-80-138209.

Kirk-Othmer. 1978. Encyclopedia of chemical technology. New York, NY: John Wiley & Sons.

Kirk-Othmer. 1980. Encyclopedia of chemical technology. 3rd edition. Volume 9. New York, NY: John Wiley & Sons.

Klabunde U. 1979. Preparation and amination of iodoaniline. U.S. Patent 3,975,439.

Kline GM. 1953. Plastics. In: encyclopedia of chemical technology. New York, NY: The Interscience Encyclopedia, Inc.

Nersasian A. 1975. Storage of stable crude isocyanates and production thereof. U.S. Patent 3,914,269.

Norton RV, and Bushick RD. Terephthalonitrile process. U.S. Patent 3,862,202.

Pistor HJ, Hoffman H, Joschek H, and Wenner G. 1977. Manufacture of 4,4'-diphenylmethane diisocyanate and a mixture of diisocyanates and polyisocyanates. U.S. Patent 4,014,914.

SRI. 1981. Directory of chemical producers - United States of America. Menlo Park, California.

Shreve RN. 1967. Chemical process industries, 3rd edition. New York, NY: McGraw-Hill Book Company.

Society of Plastics Industry. 1973. Plastics Industry Safety Handbook. Boston, MA: Cahners Books.

USEPA. 1974. A development document for effluent limitations guidelines and new source performance standards for the synthetic resin segment of the plastics and synthetic materials manufacturing point source category. Washington, DC: U.S. Environmental Protection Agency, Effluent Guidelines Division, Office of Air and Water Programs.

USEPA. 1977. Compilation of air pollutant emission factors, 3rd edition. Research Triangle Park, NC: U.S. Environmental Protection Agency, Office of Air and Water Management and Office of Air Quality Planning and Standards.

USITC. 1975. United States production and sales. Synthetic organic chemicals. U.S. Department of Commerce.

USITC. 1977. United States production and sales. Synthetic organic chemicals. U.S. Department of Commerce.

USITC. 1979. United States production and sales. Synthetic organic chemicals. U.S. Department of Commerce.

USITC. 1980. United States production and sales. Synthetic organic chemicals. U.S. Department of Commerce.

Wetherold RG, Rosebrook DD, Tichenor BA. 1981. Assessment of atmospheric emissions from petroleum refining. Research Triangle Park, North Carolina: U.S. Environmental Protection Agency.

White RE. 1980a. Organic chemical manufacturing. Volume 6. Research Triangle Park, North Carolina: IT Environscience. Prepared for Environmental Protection Agency, Office of Air Quality Planning and Standards. EPA-450/3-80-023.

White RE. 1980b. Organic chemicals manufacture, Volumes 1-10. Research Triangle Park, NC: IT Enviroscience - prepared for the Office of Air Quality Planning and Standards, U.S. Environmental Protection Agency. EPA-450/3-80-023.

White RE. 1980c. Organic chemical manufacturing. Volume 9. Research Triangle Institute, NC: IT Enviroscience. Prepared for Environmental Protection Agency, Office of Air Quality Planning and Standards. EPA-450/3-80-023.

White RE. 1980d. Organic chemicals manufacture. Volume 7. Research Triangle Park, NC: IT Enviroscience. Prepared for Environmental Protection Agency, Office of Air Quality Planning and Standards. EPA-450/3-80-023.

TABLE OF CONTENTS

Page

Foreword 259
How to use the matrix 260
Information resource matrix 261
(1) Annual Occupational Injury and Illness Survey 265
(2) Bibliographic Retrieval Service 267
(3) Chemical and Process Technology Encyclopedia 269
(4) Chemical Economics Handbook 270
(5) Chemical Engineering 271
(6) Chemical Engineering and News 272
(7) Chemicals in Commerce Information System 273
(8) Chemical Plant Data 275
(9) Chemical Substances Information Network 276
(10) Chemical Week 280
(11) Cross-Sectional Industrial Studies 281
(12) Directory of Chemical Producers 282
(13) Economic Information Systems 283
(14) Employment and Earnings 289
(15) Energy Data System 291
(16) Environmental Chemical Data and Information Network 293
(17) Chemical Substances Regulated by the Occupational Safety and Health Administration 297
(18) Epidemiological Studies Program System 299
(19) Establishment Registration Support System 300
(20) Handbook of Labor Statistics 302
(21) Hazardous Waste Site Tracking System 303
(22) Health and Environmental Effects Data Base System 305
(23) Health Effects Evaluation Data Base System 307
(24) Industrial Process Evaluations 308
(25) Industry Week 310
(26) International Registry of Potential Toxic Chemicals 311

TABLE OF CONTENTS (continued)

Page

(27) Kirk-Othmer Encyclopedia of Chemical Technology 321
(28) Lockheed Dialog Information Retrieval Service 322
(29) Multimedia Assessment of Inorganic Chemicals 326
(30) National Electronic Injury Survey System 328
(31) NIH/EPA Chemical Information System 330
(32) National Occupational Hazard Survey 334
(33) Occupational Hazard Exposure Registry 338
(34) Occupational Related Disease Case Registry 339
(35) Organic Chemical Producers Data Base 340
(36) Outcome Studies of Workers in Selected Industries and Occupations 342
(37) Pesticides Analysis Retrieval and Control System 343
(38) Pesticide Document Management System 344
(39) Pesticide Indicent Monitoring System 346
(40) Risk Analysis International Journal 349
(41) Statistical Recordkeeping System 350
(42) System Development Corporation Search Service..... 351
(43) Synthetic Organic Chemicals - U.S. Production and Sales 356
(44) Waste Characterization Data Base 358
(45) NIOSH Criteria Documents 360
(46) Occupational Safety and Health Administration (OSHA) Data Base 365
(47) Bibliography of Protective Clothing Data 368

Foreword

This appendix has been specifically developed to support the conduct of occupational exposure assessments. It is not intended to be all-inclusive or state-of-the-art in its coverage. It is intended to be a preliminary guide to information sources. No control was possible over the accuracy and/or timeliness of the 47 resources contained within this compilation beyond what is provided in the individual resource excerpts and abstracts. An attempt was made to weed out obviously out-of-date or irrelevant information sources. For the purpose of this product, an information resource has been defined loosely as any source of information and/or data and includes but is not limited to:

- data bases
- bibliographic retrieval systems
- non-bibliographic retrieval systems
- standard reference manuals
- encyclopedias
- journals and books

The major sources used to compile these two volumes include:

- USEPA, EPA Environmental Data Base and Model Index-Draft Directory, May 1981. Office of Planning and Management, Information Clearing House, EPA.

- USDC, A Directory of Federal Statistical Data Files, March 1981. Office of Federal Statistical Policy and Standards, U.S. Dept. of Commerce. PB 81-133175.

- USEPA, Environmental Information Systems Directory, January 1976. Office of Planning and Management, EPA. PB 251 170.

- USDHHS, Environmental Health - A Plan for Collecting and Coordinating Statistical and Epidemiologic Data, DHHS Publication No. (PHS) 80-1248. Office of Health Research, Statistics, and Technology; National Center for Health Statistics, Public Health Service; Dept. of Health and Human Services.

How to Use this Matrix

The matrix is arranged with the Information Resources on the vertical axis and the descriptive parameters on the horizontal axix. The numbers of the Information Resources correspond to the individually tabbed excerpts and abstracts in the accompanying support package.

A bullet (•) indicates that information on that particular descriptive parameter can be found in that particular Information Resource. An open circle (o) indicates that information on that particular descriptive parameter might possibly be found in that particular Information Resource or that information might be extrapolated from other information in that resource.

Neither the EPA nor the Contractor assumes any responsibility for the information contained within the individual excerpts or abstracts of the 47 information resources. Sole responsibility lies with each contact for each individual resource. Use of trade names does not warrant endorsement by either the EPA or the Contractor.

NUM.	INFORMATION RESOURCE	MATERIALS BALANCE								DEM.	MONITORING					MODELING		STATUS			
		PRIMARY PRODUCTION	SECOND. PROD/FAB.	TERTIARY FABRICATION	NON-PROD/FAB USES	IMPORTS & EXPORTS	TRANSPORTATION	WAREHOUSING ETC.	EMISSION FACTORS	DEMOGRAPHIC FACTORS	INDOOR ENVIRON.	OUTDOOR ENVIRON.	BIOLOGICAL	INDOOR ENVIRON.	OUTDOOR ENVIRON.	BIOLOGICAL	OPERATIONAL	TERMINATED	PROPOSED	LONG TERM	SHORT TERM
1	ANN. OCC. INJ. & ILL. SURVEY								○	●			●				●			●	
2	BIBLIOGRAPHIC RETR. SERVICE	○	○	○	○	○	○	○	○	○	○	○	○	○	○	○	●			●	
3	CHEM. & PROC. TECH. ENCYCLO.	○	○		○			○	○								●				
4	CHEMICAL ECONOMICS HANDBOOK	●	○	○	●	●		○									●				
5	CHEMICAL ENGINEERING	○	○	○	○	○	○	○	○								●				
6	CHEM. ENG. & NEWS	○	○	○	○	○	○	○	○								●				
7	CHEM. IN COMMERCE INFO. SYSTEM	●	●	●	●	●											●				●
8	CHEMICAL PLANT DATA	●	●	○	○	○											●				
9	CHEM. SUBSTANCES INFO. NETWORK	●	●	●	●			○	●	●	○	○	●			○	○		●	○	
10	CHEMICAL WEEK	○	○	○	○	○	○	○	○								●				
11	CROSS SECT. INDUST. STUDIES									●			●				●			●	
12	DIRECTORY OF CHEMICAL PROD.	●	●	○	○	○											●				
13	ECONOMIC INFORMATION SYSTEMS	●	●	●	●	○				●							●			●	

NUM.	INFORMATION RESOURCE	MATERIALS BALANCE								DEM.	MONITORING					MODELING		STATUS			
		PRIMARY PRODUCTION	SECOND. PROD/FAB.	TERTIARY FABRICATION	NON-PROD/FAB USES	IMPORTS & EXPORTS	TRANSPORTATION	WAREHOUSING ETC.	EMISSION FACTORS	DEMOGRAPHIC FACTORS	INDOOR ENVIRON.	OUTDOOR ENVIRON.	BIOLOGICAL	INDOOR ENVIRON.	OUTDOOR ENVIRON.	BIOLOGICAL	OPERATIONAL	TERMINATED	PROPOSED	LONG TERM	SHORT TERM
14	EMPLOYMENT & EARNINGS									●							●			●	
15	ENERGY DATA SYSTEM								●			●			●			●		●	
16	ENV. CHEM. DATA & INFO. NETWORK	●	○			●	●	●	●				●				○		●		
17	CHEM. SUBS. REG. BY OSHA												●				●				●
18	EPIDEMI. STUDIES PROG. SYSTEM				●					●			●				●			●	
19	ESTAB. REGIS. SUPPORT SYSTEM	●	●		●												●			●	
20	HANDBOOK OF LABOR STATISTICS									●							●				
21	HAZ. WASTE SITE TRACK. SYSTEM				●			○		●							●				●
22	HEALTH & ENV. EFFECTS D. B. SYS.												●			●	○		●		
23	HEALTH EFFECTS EVAL. DATA BASE									●	●		●				○	○			●
24	INDUSTRIAL PROCESS EVALUATIONS	●	●						●		●	●					●				●
25	INDUSTRY WEEK	○	○	○	○	○	○	○	○	○							●				
26	INTNL. REGIS. POTEN. TOXIC CHEM.	●	○		●				●				●		○	○	○		●		

NUM.	INFORMATION RESOURCE	MATERIALS BALANCE								DEM.	MONITORING					MODELING		STATUS			
		PRIMARY PRODUCTION	SECOND. PROD/FAB.	TERTIARY FABRICATION	NON-PROD/FAB USES	IMPORTS & EXPORTS	TRANSPORTATION	WAREHOUSING ETC.	EMISSION FACTORS	DEMOGRAPHIC FACTORS	INDOOR ENVIRON.	OUTDOOR ENVIRON.	BIOLOGICAL	INDOOR ENVIRON.	OUTDOOR ENVIRON.	BIOLOGICAL	OPERATIONAL	TERMINATED	PROPOSED	LONG TERM	SHORT TERM
27	KIRK-OTHMER ENCY. CHEM. TECH.	○	○	○	●			○	○								●				
28	LOCKHEED DIALOG INFO. RET. SER.	●	○	○	●	●	●	○	○	●	○	○	○	○	○	○	●			●	
29	MULTIMEDIA ASSESS. INORG CHEM.	●	●		●				●				●					●		●	
30	NATL. ELEC. INJURY SURV. SYS.									●			●				●				●
31	NIH/EPA CHEM. INFO. SYSTEM				●			○	●			●	●				●			●	
32	NATL. OCC. HAZARD SURVEY									●	●		●					●			●
33	OCC. HAZARD EXPOSURE REGISTRY									●			●				●				●
34	OCC. REL. DISEASE CASE REGIS.									●			●				●				●
35	ORGANIC CHEM. PROD. DATA BASE	●	●		●				●								●				●
36	OUT. STUD. WORK. SEL. IND. OCC.									●			●				●			●	
37	PEST. ANAL. RET. & CONTROL SYS.	●	○		●												●			●	
38	PEST. DOCUMENT MANAG. SYSTEM	●	○		●								●				●				●
39	PEST. INCIDENT MONITOR. SYSTEM				●								●				●			●	

NUM.	INFORMATION RESOURCE	MATERIALS BALANCE								DEM.	MONITORING					MODELING	STATUS				
		PRIMARY PRODUCTION	SECOND. PROD/FAB.	TERTIARY FABRICATION	NON-PROD/FAB USES	IMPORTS & EXPORTS	TRANSPORTATION	WAREHOUSING ETC.	EMISSION FACTORS	DEMOGRAPHIC FACTORS	INDOOR ENVIRON.	OUTDOOR ENVIRON.	BIOLOGICAL	INDOOR ENVIRON.	OUTDOOR ENVIRON.	BIOLOGICAL	OPERATIONAL	TERMINATED	PROPOSED	LONG TERM	SHORT TERM
40	RISK ANALYSIS - INTERNL. JOURNAL								○	○	○	○	○	○	○	○	●				
41	STATIST. RECORDKEEPING SYSTEM									●			●				●			●	
42	SYS. DEV. CORP. SEARCH SERVICE	○	○	○	○	○	○	○	○	○	○	○	○	○	○	○	●			●	
43	SYNTHETIC ORGANIC CHEMICALS	●	○	○	○	●											●			●	
44	WASTE CHARACTER. DATA BASE	●	●						●								●				●
45	NIOSH CRITERIA DOCUMENTS												●				●				●
46	OSHA										●	●	●								
47	BIBLIO. OF PROTECT CLOTHING									○	○	○	○								

Table 1. Profile of data collection systems that measure population health status

Name of program or system	Agency	Purpose	Topical focus of data		Method of data collection	Population-location-time coverage	Method of data dissemination	Statistics generated
			Health	Environment or individual exposure				
Annual Occupational Injuries and Illness Survey	BLS	To provide data on work-related disease and injury.	Acute disease and acute injury by cause, with or without lost work days. Fact of death.	Industry. Establishment size.	Morbidity Record Survey. Probability sample of employers under OSHA recordkeeping, stratified by industry and establishment size	Since 1972, ongoing surveys of nearly all private sector industries across the United States.	Tape. Publication.	Incidence of illness and injury by type of case per plant-hour worked.

Are You Looking For:

LAURA KASSEBAUM
Manager, New Product Development

BRS Bibliographic Retrieval Services, Inc
611 Cameron Street, Alexandria, VA 22314 703-548-4005

Online Database Service?

Current Awareness Service?

Private Database Service?

Online Catalog Service?

Online Retrieval Software?

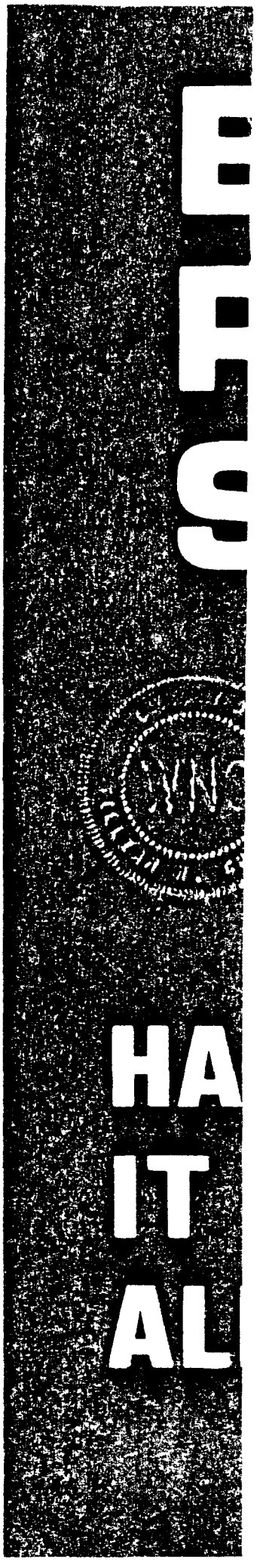

An Introduction to BRS

BRS was established in 1976 to provide innovative and cost-effective online information retrieval services and technology to a national user community.

By introducing lower connect hour rates, group membership plans and subscription access, BRS quickly became the system of choice for online users in academic, government, and special libraries throughout the United States, Canada, and Europe.

In addition to the BRS Online Search Service for commercially available databases, BRS also offers a comprehensive private database service, a sophisticated SDI service, online searching of card catalogs, and lease or purchase plans for its highly specialized retrieval software programs.

BRS is the only online vendor that provides this full range of online products and services, extending its technology to many diverse applications within the library and information community.

Let BRS help you meet *all* your information needs!

DATABASES AVAILABLE FROM BRS

Databases currently availabie from BRS were selected for quality and wide appeal and have been carefully tured for maximum searching efficiency In addition to those files currently available, BRS will continue to mak databases available online according to user demand

DATABASES CURRENTLY AVAILABLE FROM BRS

(June, 1980)

DATABASE	PRODUCER	SUBJECT AREA	BRS COVERA ONLINE/OFFL
AGRICOLA	National Agricultural Library (NAL)	Agriculture	1975 + /1970-74
ALCOHOL USE/ABUSE	Hazelden Foundation	Alcoholism	total online (196
BIOSIS PREVIEWS	BioSciences Information Services	Biological sciences	1978 + /1970-77
BOOKSINFO	Brodart, Inc	800,000 books in print	total online
CA CONDENSATES	Chemical Abstracts Service	Chemistry	n.a /1970-76
CA SEARCH	Chemical Abstracts Service	Chemistry	total online (197
COMPUTER AND CONTROL ABSTRACTS	Institution of Electrical Engineers London, England	Computer & control engineering	1977 + /1970-76
DISSERTATION ABSTRACTS	University Microfilms	Multi-disciplinary	total online (186
DRUGINFO	University of Minnesota College of Pharmacy	Drug Abuse	total online (196
ELECTRICAL AND ELECTRONICS ABSTRACTS	Institution of Electrical Engineers London, England	Electrical & Electronic engineering	1977 + /1970-76
ENVIRONMENTAL IMPACT STATEMENTS	Information Resources Press	Environment	total online (19
ERIC	National Institute of Education	Education	total online (19
EXCEPTIONAL CHILD EDUCATION RESOURCES	Council for Exceptional Children	Exceptional child education	total online (19
FEDEX	U.S Department of Energy	Energy Statistics	total online (19
GPO MONTHLY CATALOG*	U.S Government Printing Office	Government publications	total online (19
INFORM	Data Courier, Inc.	Business	total online (19
MANAGEMENT CONTENTS	Management Contents, Inc	Business	total online (19
MEDLARS	National Library of Medicine (NLM)	Medicine, nursing, dentistry	1978 + /1966-
MEDOC	Eccles Health Sciences Library University of Utah	Government documents in health sciences	total online (19
NAL SERIALS	National Agricultural Library	NAL serial records	total online
NARIC	National Rehabilitation Information Center	Rehabilitation literature	total online (19
NIMIS	Nat'l Center of Educational Media and Materials for the Handicapped	Instructional materials for education of handicapped	total online
NIMH	National Institute of Mental Health	Mental health and related information	total online (19
NTIS	National Technical Information Service	Government reports, all areas	1975 + /1970-7
PAIS	Public Affairs Information Service	All social sciences	total online (19
PHARMACEUTICAL NEWS INDEX	Data Courier, Inc	Drug industry news	total online (19
PHYSICS ABSTRACTS	Institution of Electrical Engineers	Physics	1977 + /1970-7
POLLUTION ABSTRACTS	Data Courier, Inc	Pollution	total online (19
PREDICAST PROMT**	Predicasts, Inc	Business and economics	total online (19
PSYCHOLOGICAL ABSTRACTS	American Psychological Association	Psychology	total online (19
SOCIAL SCIENCE CITATION INDEX	Institute for Scientific Information	Social Science	1977 + /1972-
SSIE	Smithsonian Science Information Exchange	Physical, social engineering and life sciences	total online (19
US PATENTS	Pergamon International Information Corporation	All patents registered through U S Patent Office	total online (18

*These files are scheduled for availability by 3rd Quarter 1980
**All other Predicast databases are scheduled for 3rd Quarter 1980

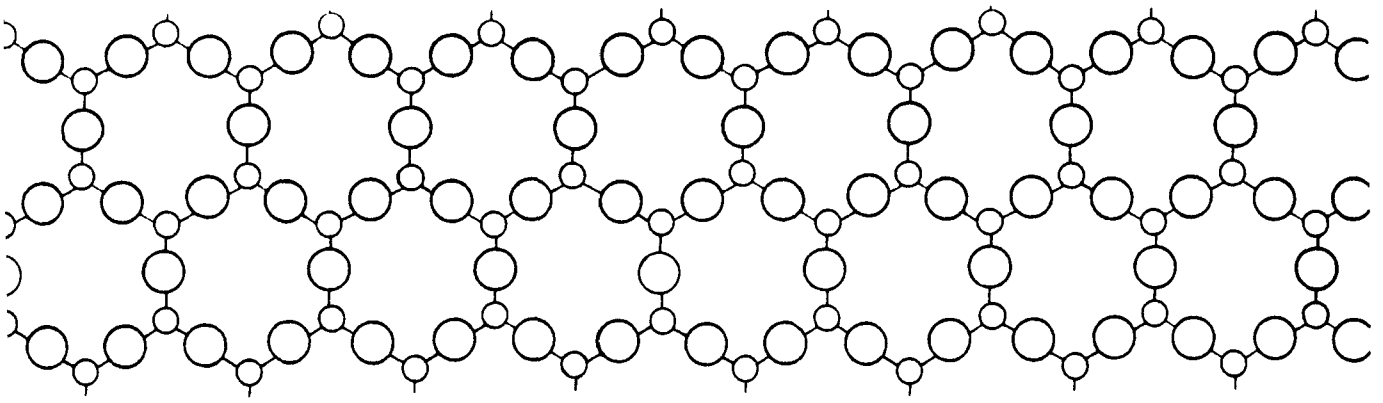

chemical and process technology encyclopedia

editor-in-chief

Douglas M. Considine

Consulting Engineer, Los Angeles, California

McGRAW-HILL BOOK COMPANY

New York St. Louis San Francisco London
Düsseldorf Johannesburg Kuala Lumpur
São Paulo Singapore Toronto
Montreal Mexico Sydney
Panama New Delhi

CEH

Scope:

The Chemical Economics Handbook (CEH) is a multi-volume loose-leaf boo concerned with the economic status and progress of the world's chemical industries. Participants (subscribers) are kept informed regarding the pres and future status of raw materials, primary and intermediate chemicals, chem product groups, the chemical industry, and those aspects of other industries the total economy that are relevant to the chemical industry. Emphasis is placed on future markets, both in terms of quantities and economies of chemi cals produced/consumed and the technological requirements of future demand.

Sections of the CEH are: Introduction; Index; Economic Indicators; Ma of Current Indicators; Industry; Chemicals. The main body of CEH is made up Reports and Data Sheets concerning individual chemicals or groups of chemica Data Sheets are summaries including data on chemical production, sales, consumption, price, manufacturing processes, producing companies, plant locations, plant capacities, imports, exports, and sources used. Yearly gro rates can be extrapolated and compared using the standardized graphs and a special protractor, included with each CEH set.

Reports contain detailed analytical sections on topics covered by Data Sheets. CEH Reports are written by subject specialists and reviewed by col borating experts in the chemical industry, market researchers, or product managers.

A "Manual of Current Indicators" section reporting recent economic st tistics is updated and reissued every other month.

CEH contains chemical industry economic indicators such as product gr curves, production quantities, inventory data, price, and export/import rat Plant locations, capacities and other data are gathered and updated occasionally. Specialized volumes deal with specific industries such as pesticides.

Access:

CEH is available from SRI International, Memlo Park, CA.

Cost:

Hard copy is available for $7,500-9,000 depending on the number of sp cialized volumes desired. Computer tape with data listed therein are avail Monthly indexes for the main body of the handbook and for the specialized v umes are available at a subscription cost.

HEMICAL
NGINEERING

A McGRAW-HILL PUBLICATION
AUGUST 27, 1979

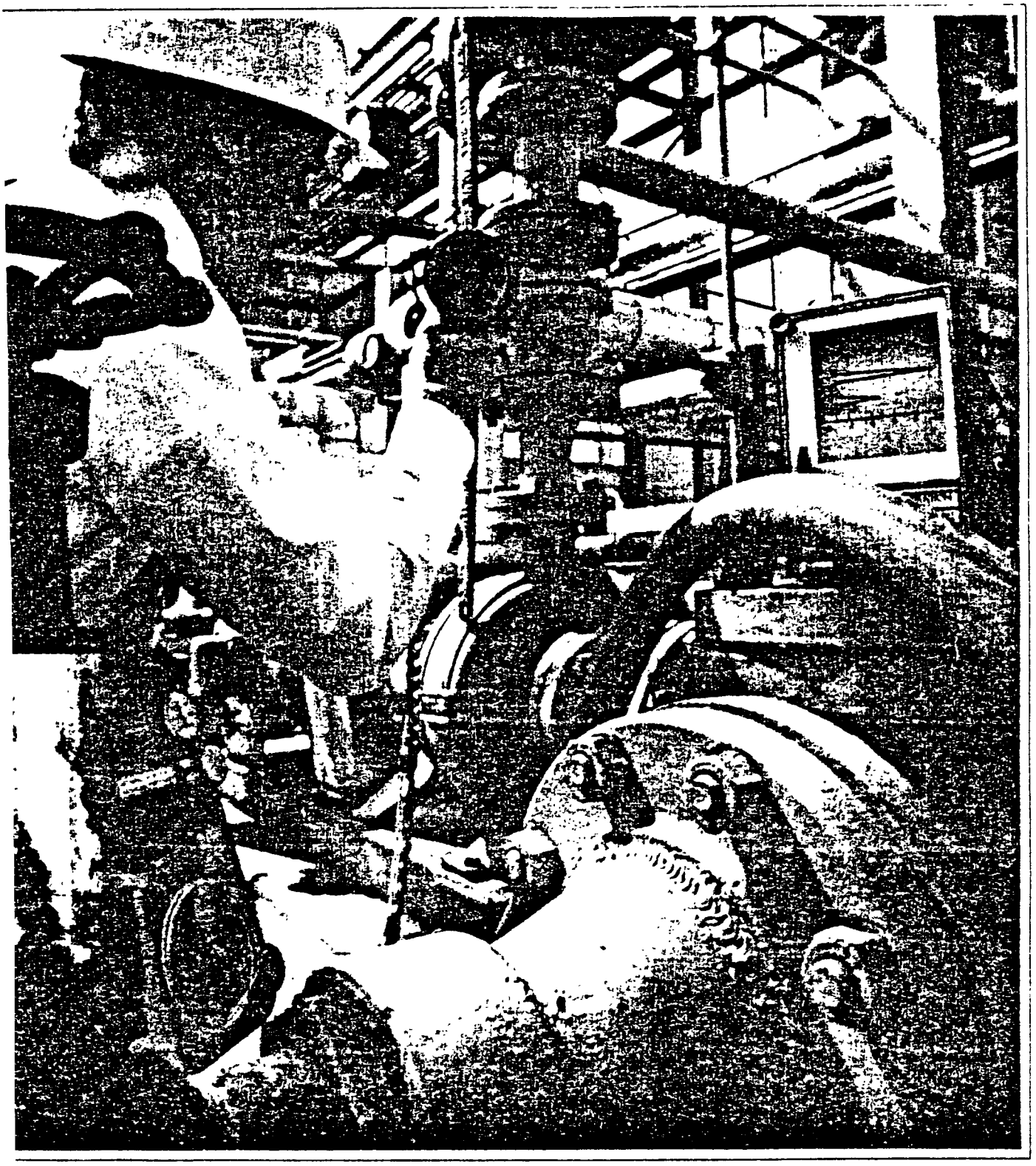

ɔing fugitive emissions

Chemical & Engineering NEWS

Air quality commission sec
options to regulations Page 1

SOLVENTS

the hard search for growth

A Key Chemicals Review Page 10

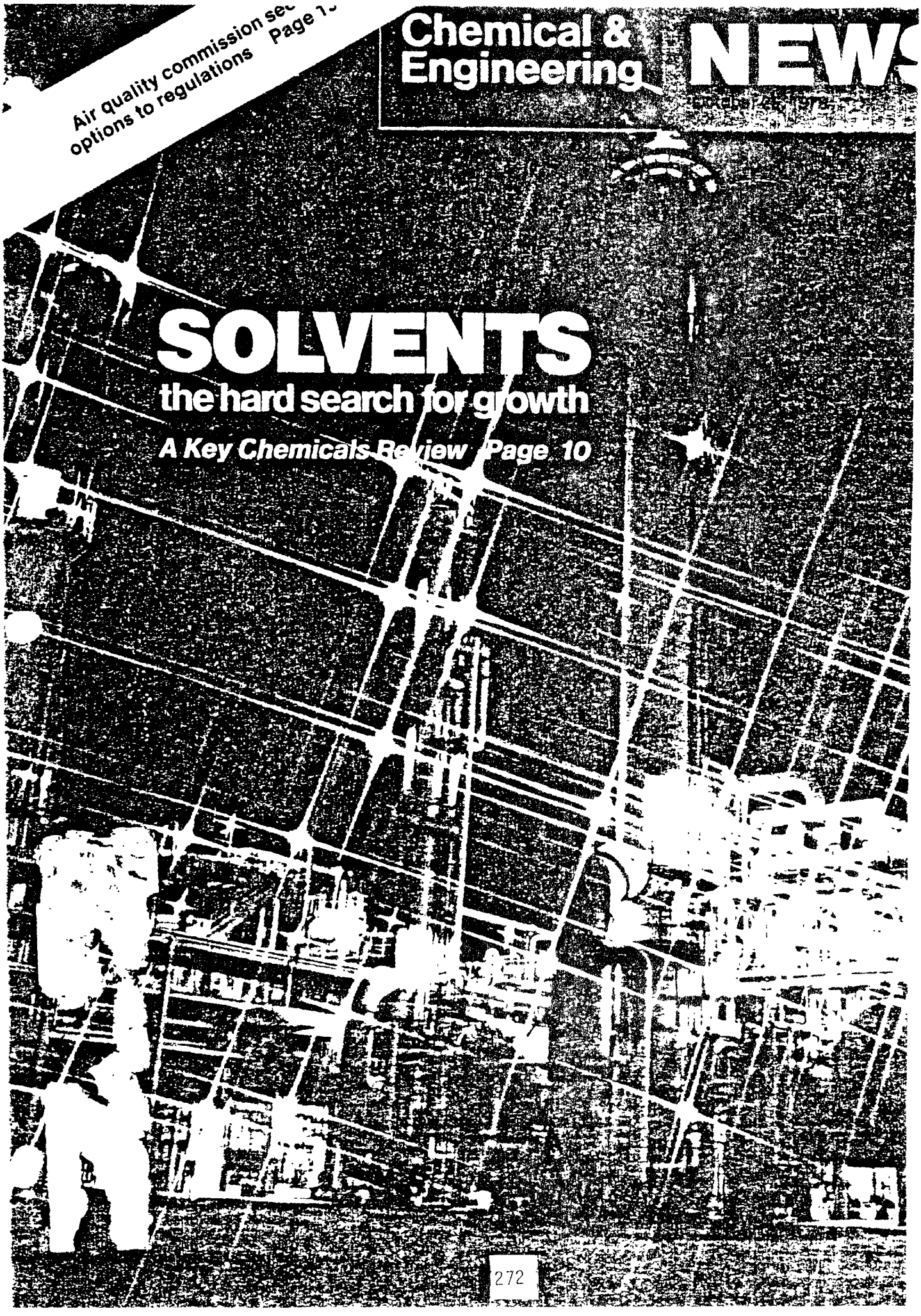

)1700904

Chemicals in Commerce Information System

)nym: CICIS
.a sampled to generate data: No specific media
: of data collection/monitoring: chemical manufacturing and production data
ı base status: Operational/ongoing

:RACT: The Toxic Substances Control Act (TSCA) provides EPA with authority to ılate commercial chemical substances, which pose unreasonable risk to man and the .ronment. CICIS supports this effort. Information maintained are chemical, ıt, and production volumes. It contains chemicals manufactured or imported in U.S., what chemicals are manufactured or imported at a given site, where plants located, and their names. There are data for about 55,000 chemicals in CICIS, .uding the approximately 700 in the clearinghouse.

·pollutant parameters include: Chemical data
Location
Manufacturer
Production levels

ıing study time period is 01/01/77 to 12/30/77
ıination of data collection: Occurred 12/30/78

ıuency of data collection: one time only
TSCA allows EPA to collect additional information, as required, which may serve to update the data base.

.l estimated number of observations is 48000 substances.
mated annual increase of observations is unknown.

. base includes: Summary or aggregate observations

.l number of stations or sources covered is 8000 sites.
ıer currently contributing data is 0.

;raphic coverage of data base: National
.lity identifiers include: Plant facility name
Plant location
Street address
Dun and Bradstreet number
Program identifier
.utant identification data have: CAS registry number codes

.tations: The CICIS On-line User's Guide should be consulted aprior to accessing information. Quality assurance questions are not applicable.

. procedures used and documented.

. collected by: Contractor - Chemical Abstracts Service

Data analyzed by: EPA headquarters - Office of Pesticides and Toxic Substances (OPTS)/Office of Toxic Substances (OTS)
Data base does not identify specific laboratory performing analysis.

Development of regulations or standards is the primary purpose for data collect:
Risk assessment is the secondary purpose for data collection.
Statutory authorization is P L 94-469, Sections 8(a) and 8(b) Toxic Substances Control Act (TSCA)
OMB form number: 158S77011
Form of available reports and outputs: 055-007-00004-7, 055-007-00003-9, 055-(00189-8: Government Printing Office T: chemical inventory, PB-295-108 Nationa. Technical Information Service (NTIS) magnetic tape.
Printouts on request
Microfilm
On-line computer
Current regular users of data base: 8 offices
Users: EPA headquarter offices - Offices of Pesticides and Toxic Substances, O of Toxic Substances, Office of Enforcement, Office of Solid Waste, Offi Research and Development, Office of Drinking Water, Office of Water Pro Operations, Office of Air Quality Planning and Standards
Other federal agencies
Confidentiality: Limits on access within EPA and outside agency for some data
Primary physical location of data: Contractor
Form of data storage: Magnetic disc
Data access: EPA software CICIS MIDSD system number: 7301700904
EPA hardware DECSYSTEM-2020

Contact - Subject matter: Geri Nowak (202)755-9336
Contact - Computer-related: Denny Daniels (202)426-2447
Contact - responsible EPA Office: Tony Jover (202)426-4697

Charge for non-EPA use: no outside use/access permitted
Frequency of master file up-date: selected portions/chemicals updated as requi

Person completing form: Tony Jover
Office: Office of Pesticides and Toxic Substances (OPTS)
Office of Toxic Substances (OTS)/Management Support Division (MSD)
Address: 401 M St, SW, Washington, DC 20460
Phone: (202)426-4697

Pollutants included in data base:
acenaphthene 83-32-9
acenaphthylene 208-96-8
acetaldehyde 75-07-0
acetic acid 64-19-7
acetic anhydride 108-24-7
acetone 67-64-1
acetone cyanohydrin 75-86-5
acetonitrile 75-05-8

CPD

Scope:

Chemical Plant Data (CPD) is designed to provide worldwide information on chemical plants producing, or planning to produce, any of more than 100 basic chemicals. Currently, 114 chemicals, or in some cases classes of chemicals, are covered. The information available through this service is based upon material collected from a wide range of sources published in many languages, and includes technical literature, company information, annual reports, etc. In addition, companies are approached to verify the information thus provided.

Subject coverage includes:

- 114 chemical commodities
- Producing plant listings (worldwide)
- Plant capacities, start-up date
- Production/Sales/Statistical summaries
- Producer/Process/Feedstock

Access:

Currently, Chemical Plant Data is disseminated primarily in hard copy form. Online computer retrieval of this information is, however, in the planning stages. For further information contact:

The Sales Department
Chemical Data Services
Dorset House, Stamford Street
London, SE1 9LU, ENGLAND

Cost:

Not available.

Sample Search/Output:

Not applicable.

D7103000901

Chemical Substances Information Network

Acronym: CSIN
Media sampled to generate data: CSIN to allow access to many kinds of existing resources carrying data and information on all the media.
Type of data collection/monitoring.. CSIN to allow access to many data bases carrying information from various sources.
Data base status: Funded for development Projected operational date:01/00/81

ABSTRACT: CSIN provides a coordinated approach to the identification, location, accessing, processing, and analysis of data and information on chemical substances and how they impact humans and the environment. The Network will allow and encourage user interaction with data resources which are geographically scattered and resident in disparate and diverse computer systems. Most of the complex interfacing steps previously required to make use of computer resources will be eliminated and/or made transparent to the user.

Non-pollutant parameters include:
- Biological data
- Chemical data
- Collection method
- Compliance data
- Concentration measures
- Cost/economic data
- Discharge points
- Disposal
- Elevation
- Exposure data
- Flow rates
- Funding data
- Geographic subdivision
- Health effects
- Industry
- Inspection data
- Location
- Manufacturer
- Physical data
- Political subdivisions
- Population demographics
- Population density
- Precipitation
- Production levels
- Salinity
- Sampling date
- Site description
- Temperature
- Test/analysis method
- Treatment devices
- Use
- Volume/mass measures

Wind direction
Wind velocity
Presence of data elements varies by resource (data base)

ng study time period is 01/01/70 to 09/30/80 (present)
nation of data collection: Not anticipated

ency of data collection: frequency of collection, sampling, updating dependent on rate established by each resource in the network.

estimated number of observations is 2.5 million.
ated annual increase of observations is 15-20 million.

base includes: Raw data/observations
Summary or aggregate observations
Reference data/citations
varies by resource/data base

number of stations or sources covered is 8-10 resources.
r currently contributing data is 3.

aphic coverage of data base: International
National

ion identifiers of station/source for each record are: State
County
Congressional district
SMSA
City
Town/township
Street address
Coordinates
Project identifier
varies by resource/data base

ity identifiers include: Plant facility name
Plant location
Parent corporation name
Parent corporation location
Street address
SIC code
Dun and Bradstreet number
SCC
NPDES
Program identifier
varies by resource/data base

tant identification data have: CAS registry number codes

ations: The prototype, operational '81, includes NLM (Medlars Chemline, etc.) nd CICIS, 5-7 additional resources will be added in calendar '81. Each rce on the network has front end caveats which speak to differences in periods

of sampling, numbers of observations, experimental protocols, quality assurance procedures followed & levels of documentation, etc.

Data collection and analysis procedures: documented in quality assurance project plan
Sampling plan documented
Collection method documented
Analysis method documented
QA procedures documented (Above varies l resource/data base.)
Lab analysis based on EPA-approved or accepted methods.
Lab analysis not based on EPA-approved or accepted methods.
(Above varies by resource/data base.)
Lab audit is satisfactory for varies by data base.
Precision and accuracy estimates partially exist for some resources/data bases
Edit for some resources, not for others.

Data collected by: Self reporting
Local agency
State agency
Regional office
EPA lab
Contractor lab
Contractor
Other federal agency
EPA headquarters
Collector varies by resource/data base
Data analyzed by: Self reporting
Local agency
State agency
Regional office
EPA lab
Contractor lab
Contractor
Other federal agency
EPA headquarters
Analyzer varies by resource/data base
Data base identifies specific laboratory performing analysis.
Data base does not identify specific laboratory performing analysis.

Development of regulations or standards is the purpose for data collection.
Compliance or enforcement is the purpose for data collection.
Trend assessment is the purpose for data collection.
Technology development is the purpose for data collection.
Risk assessment is the purpose for data collection.
Anticipatory/research is the purpose for data collection.
Program evaluation is the purpose for data collection.
Special study is the purpose for data collection.
Purpose varies by resource/data base is the purpose for data collection.
Statutory authorization is P L 94-469, Sections 10 & 25. Each resource has its o authorization.

of available reports and outputs: Publications overview documents, technical user documents, CSIN Directory
Unpublished reports
Printouts on request
Microfilm
Machine-readable raw data
On-line computer
Outputs available vary by resource/data base.

ent regular users of data base: 10-50 offices
s: EPA headquarter offices - Office of Pesticides and Toxic Substances Office of Toxic Integration
EPA regional offices
EPA laboratories
Other federal agencies
States
Industry, academia, and other nations.
dentiality: Limits on access within EPA and outside agency for some

ary physical location of data: Contractor
EPA lab
Regional office
NCC/UNIVAC
NCC/IBM
Headquarters office
State agency
Other federal agency
Varies by resource/data base.

of data storage: Magnetic tape
Magnetic disc
Microfich/film
Original form (hardcopy, readings)
Varies by resource/data base

access: EPA software MIDSD system number: 7500000901
data identified, located & accessed through the CSIN front end.

act - Subject matter: Dr. Sidney Siegel (202)755-8040
act - Computer-related: Dr. Sidney Siegel (202)755-8040
act - responsible EPA Office: Office of CSIN Administration (202)755-8040

ge for non-EPA use: yes
ency of master file up-date: varies by resource/data base.

ed EPA systems: Chemical Information System (CIS), Chemicals in Commerce mation System (CICIS)
ed EPA data bases: Storage and Retrieval of Water Quality and Related Data ET), User Prompted Graphic Data Evaluation System (UPGRADE), Health and onmental Effects Data Analysis System (HEEDA)
ed non-EPA data bases: National Library of Medicine - bibliographic files , Toxicology Data Management System (TDMS), Chemical Regulations and Guidelines m (CRGS), PROPHET (National Institutes of Health)

chemicalweek

A McGraw-Hill publication / Octobe

OIL and CHEMICALS Era of peaceful co-existence?

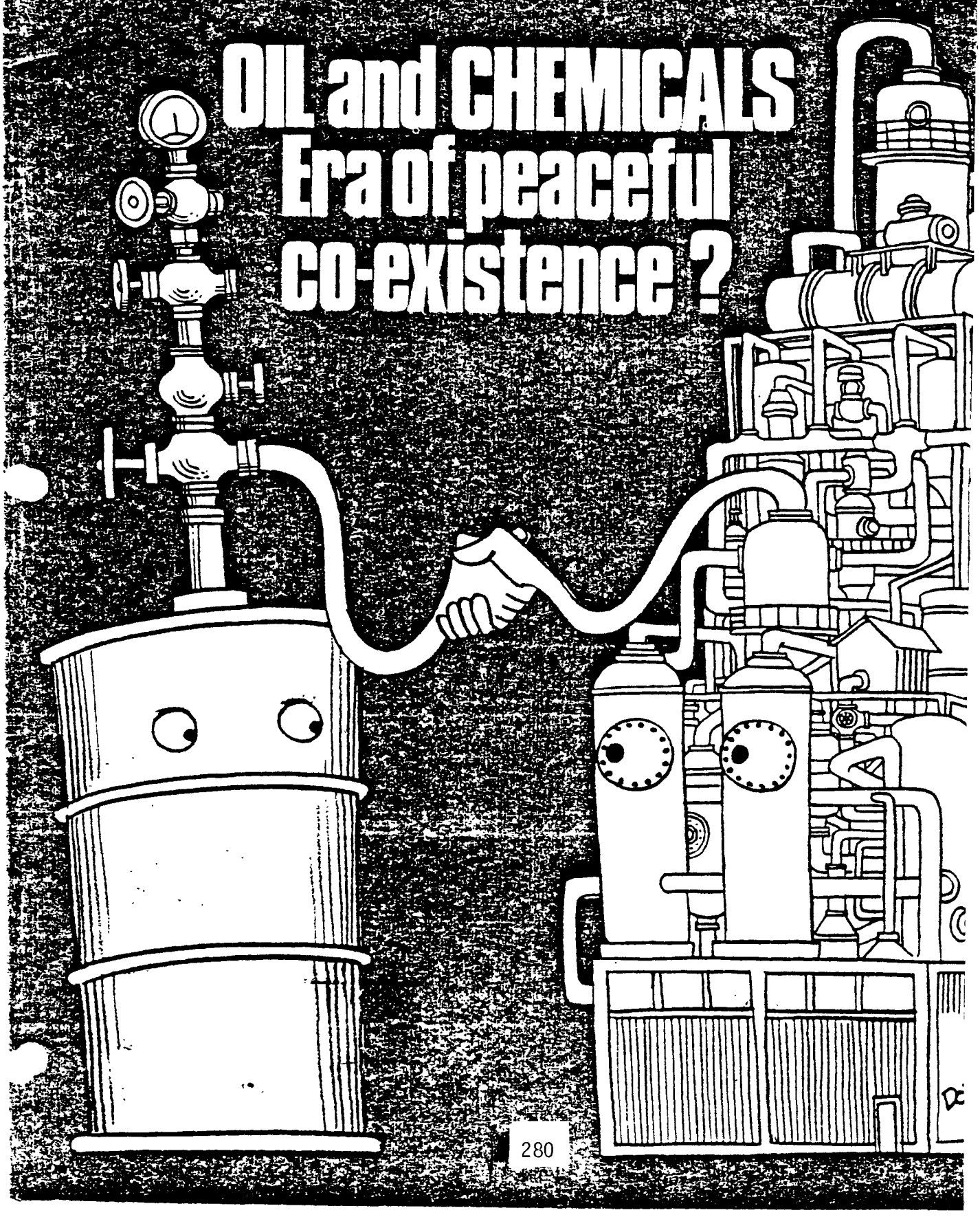

Table 3. Profile of data collection systems that test specific interrelationships—Con.

(Agency designations by acronym are listed in figure 1)

Name of program system	Agency	Purpose	Topical focus of data		Method of data collection	Population-location-time coverage	Method of data dissemination	Statistics generated
			Health	Environment or individual exposure				
Cross Sectional Industrial Studies	NIOSH	To understand relationship between type of industry and illness of reproductive system.	Physical symptoms.	Occupational history Current levels of selected pollutants proximal to worker	Cohort studies Exposed and control groups are selected. Interviews with all employees and in some cases medical examinations are conducted.	Series of industrywide studies, beginning in 1971.	Special reports.	Relative risk statistics. Morbidity rates. Average exposure to selected pollutants.

DCP

Scope:

The Directory of Chemical Producers: United States of America (DCP) · annually published book with quarterly updates. It provides ready referenc commercial chemical manufacturers and products produced in the U.S.A. Commercial chemicals are defined as those produced in excess of 1,000 pound $1,000 value per year. Indexes of products, companies, and regions provide access to manufacturer names, locations, and products. Supplemental information, such as annual production volumes and company relationships, a frequently included.

Data contained in the Directory are obtained from questionnaires retu from manufacturers, technical and trade journals, other contacts with manufacturers, and research. Sixteen hundred companies, representing 4,300 plant sites producing 10,000 chemicals, are reported in the volume. Each a issue of the book contains only one year's data. The book has been publish since 1961.

Access:

The Directory of Chemical Producers: United States of America is dis nated and produced by the Chemical Information Services Department, Chemica Industries Center, SRI-International, Inc., Menlo Park, California.

Cost:

The Directory of Chemical Producers is available on a subscription ba for $450 for the first year, and $300/year for subsequent renewal subscrip The subscription includes the book and quarterly updates.

Sample Search/Output:

Not applicable.

ECONOMIC INFORMATION SYSTEMS, Inc.

SHARE-OF-MARKET AND SHIPMENTS REPORTS

on U.S. manufacturing industries

ıry behind EIS reports

ıdiate source of EIS reports is the ess Data Base. This Data Base is a nsive store of information on the ıector of the U.S. economy It con- ıled records on the top 300,000 ıstablishments with 20 or more em- ıat account for 85% of business ır names, addresses, phone num- ı of business, number of employees ' company ownership.

tion, the EIS Data Base can inter- a unique body of information—EIS put" ratios. These ratios enable us te the volume of sales and pur- virtually all products and services d sold by U.S. business establish- library of computer programs en- ı manipulate the information in the to produce selective marketing re- ıany aspects of the economy.

acy and currency of the EIS Data ıes from its structure, source ma- maintenance/update procedures.

Founded in 1968, the Data Base was constructed to parallel U.S Census Bureau records on business activity It incorporates all available information on business establishments and firms published in the classified sections of U S telephone directories, state and industrial directories, annual reports and SEC 10K statements All this data is reconciled each year with the corresponding "control" totals published by the U S Census Bureau for industries and regions.

Quarterly updating of the Data Base utilizes an accumulation of new information from published sources, plus feedback from EIS clients on new establishments, changes in plant size and other field-based findings

Many types of reports can be furnished from the EIS Data Base Among them are.

Shipments and Share-of-Market Reports on Manufacturing Industries These reports analyze any manufacturing industry in terms of key producers and ownership structure

Market Share Reports on "Non-Manufacturing" Industries These reports, concentrating on commercial/service industries, identify and rank by market share all major companies and their subsidiaries

Sales Structure Reports analyze individual companies in terms of sales, market share and diversity of operations

Market Potential Reports identify establishments and firms that use any industrial product or service, with estimates of the amount each one uses.

Market Penetration Analyses utilize your own customer lists to build a profile of your company's share-of-market in each industry in which it operates.

Market Projection Reports forecast the growth trends of business markets for any of your company's products or services

For detailed information on these reports, and the full scope of EIS services, contact Economic Information Systems, Inc by phone or mail

SHARE-OF-MARKET AND SHIPMENTS REPORTS:

The reports that analyze manufacturing industries—by share-of-market of producing companies and by shipments of producing establishments

SHARE-OF-MARKET REPORTS

What's in the Report?

An EIS Share-of-Market Report analyzes any "4-digit SIC" manufacturing industry in terms of its marketplace concentration and ownership structure.

It lists the companies in that industry. It ranks them by their importance as producers. It furnishes the share-of-market (in dollars and percent) held by each, and it groups all the plants the company operates in the industry, with the parent company's market share broken down to a per-plant basis.

The report is unique in that it links every producing plant to the company that owns it regardless of the name under which the plant operates. And it reveals how much each plant contributes to its parent company's share-of-market in the industry.

How are the Reports used?

A report on an industry you compete in tells you your company's competitive position, and identifies and ranks your competitors. This information is valuable as a basis realistic market penetration goals.

A report on an industry you sell your major potential customers. B tifying the plants they own, the serve as a guide to structuring accounts" for special sales handli

Acquisition and investment Re dustries you're interested in can rapid identification of companies for acquisition, merger or investm

Portion of a typical EIS Share-of-Market Report—on SIC 3622, Industrial Controls

RANKING (BY SHARE OF MARKET)	PARENT COMPANY NAME	PLANTS OWNED IN SIC 3622	COMPANY AND PLANT ADDRESSES				PHONE NUMBERS	ANNUAL SALES ($ MIL)
1	ALLEN BRADLEY CO INC		1201 S 2ND	MILWAUKEE	WI	53204	414 671 2000	227.4
		ALLEN BRADLEY SYSTEMS DV	62 ENTERPRISE DR	ANN ARBOR	MI	48103	313 761 2255	2.5
		ALLEN BRADLEY SYSTEMS DV	747 ALPHA DR	HIGHLAND HGTS	OH	44143	216 449 6700	7.9
		ALLEN BRADLEY DRIVES DIV	N143 W6437 PIONEER	CEDARBURG	WI	53012	414 377 1200	2.6
		ALLEN BRADLEY CO	1201 S 2ND ST	MILWAUKEE	WI	53204	414 671 2000	198.0
		ALLEN BRADLEY CO	HWY 14 EAST	RICHLAND CNTR	WI	53581	608 647 6376	16.4
2	GENERAL ELECTRIC CO		3135 EASTON TPKE	FAIRFIELD	CT	06431	203 373 2211	203.7
	GENERAL ELECTRIC CO INC		2955 MERCED	SAN LEANDRO	CA	94577	415 436 9000	3.3
	GENERAL ELECTRIC CO		GENERAL ELECTRIC RD	BLOOMINGTON	IL	61701	[illegible]	[illegible]

SHIPMENTS REPORTS

What's in the Report?

An EIS Shipments Report identifies—and arrays by state and county—all the important producing plants in any (4-digit SIC) manufacturing industry.

The report includes every plant in the industry which has annual shipments of over $500,000—and/or 20 or more employees.

Each plant in the report is identified by name, address and phone number. The report furnishes the estimated annual shipments and percent-of-market of each plant, each county and each state.

How are the Reports used?

As a sales tool The report enables you to identify all the important buying units in an industry you sell to, and to qualify prospects by their estimated volume of purchases of your product. It also indicates in which states and counties the purchases of your product are concentrated.

As a marketing tool. A report on your own industry enables you to compare tion as a producer to that of com ducers; and it shows you where competitors are located—and con

As a planning tool The geograp zation of the Report can serve as new site locations. Reports on ke you sell to will show the concer terns of your markets, suggesting tions for new production, sales housing facilities.

Portion of a typical EIS Shipments Report—on SIC 3622, Industrial Controls

STATE	COUNTY	PRODUCING PLANTS	PLANT ADDRESSES			PHONE NUMBERS	ANNUAL SHIPMENTS ($ MIL)
CONNECTICUT							
	FAIRFIELD						
		3622 BELL & HOWELL CONTROL PROD DV	706 BOSTWICK AVE	BRIDGEPORT	06605	203-368 6751	.7
		3622 ELECTROLOY CO	1010 ATLANTIC ST	BRIDGEPORT	06604	203-335 3114	2.9
		3622 ELECTRO MECH DV AMER CHAIN	10 RESEARCH DR	STRATFORD	06497	203-576 0549	2.1
		3622 HARREL INC	16 FITCH ST	E NORWALK	06855	203-866 2573	2.1
		3622 BALDWIN-GEGENHEIMER CORP	401 SHIPPAN AVE	STAMFORD	06902	203-325 3581	4.1
		3622 REGENT CONTROLS INC	181 HARVARD AVE	STAMFORD	06902	203-348 7734	3.3
				COUNTY TOTALS			15.2
	HARTFORD						
		3622 ARROW HART	103 HAWTHORNE ST	HARTFORD	06106	203-249 8471	49.2
		3622 CARDINAL CONTROL CO INC	261 KENSINGTON RD	KENSINGTON	06037	203-828 6379	2.4
		3622 COMBUSTION ENGRG CONTROLS DV	100 ADDISON RD	WINDSOR	06095	203-688 1911	4.0

ECONOMIC INFORMATION SYSTEMS, Inc.

LINE OF BUSINESS REPORTS

on major diversified U.S. companies

ıry behind EIS reports

ıdiate source of EIS reports is the ɜss Data Base. This Data Base is a nsive store of information on the ɜector of the U.S economy It con- ıled records on the top 300 000 ɜstablishments with 20 or more em- ıat account for 85% of business ır names, addresses, phone num- ɜ of business, number of employees t company ownership.

tion, the EIS Data Base can inter- a unique body of information—EIS put" ratios These ratios enable us te the volume of sales and pur- virtually all products and services d sold by U.S business establish- library of computer programs en- ɔ manipulate the information in the to produce selective marketing re- ıany aspects of the economy

ɜacy and currency of the EIS Data ɜes from its structure source ma- maintenance/update procedures

Founded in 1968, the Data Base was constructed to parallel U.S. Census Bureau records on business activity It incorporates all available information on business establishments and firms published in the classified sections of U S telephone directories, state and industrial directories, annual reports and SEC 10K statements All this data is reconciled each year with the corresponding "control" totals published by the U S Census Bureau for industries and regions

Quarterly updating of the Data Base utilizes an accumulation of new information from published sources, plus feedback from EIS clients on new establishments, changes in plant size and other field-based findings.

Many types of reports can be furnished from the EIS Data Base. Among them are

Shipments and Share of-Market Reports on Manufacturing Industries These reports analyze any manufacturing industry in terms of key producers and ownership structure

Market Share Reports on "Non-Manufacturing" Industries These reports, concentrating on commercial/service industries, identify and rank by market share all major companies and their subsidiaries

Line of Business Reports analyze individual companies in terms of sales, market share and diversity of operations

Market Potential Reports identify establishments and firms that use any industrial product or service, with estimates of the amount each one uses

Market Penetration Analyses utilize your own customer lists to build a profile of your company's share-of-market in each industry in which it operates

Market Projection Reports forecast the growth trends of business markets for any of your company's products or services

For detailed information on these reports and the full scope of EIS services contact Economic Information Systems Inc by phone or mail

LINE OF BUSINESS REPORTS:

The reports that analyze companies by sales, ranking and plant ownership—in all the industries in which they operate. Example: ACF Industries, Inc.

LINE OF BUSINESS REPORT

PART 1

ACF'S RANKING IN EACH INDUSTRY IN WHICH IT OPERATES

INDUSTRIES IN WHICH ACF OPERATES		ANNUAL SALES ($ MIL)	PERCENT OF ACF'S SALES	PERCENT OF INDUSTRY SALES
SIC	DESCRIPTION			
3041	HOSE AND BELTING	51.5	9.02	3.33
3321	GRAY IRON FOUNDRIES	7.5	1.31	0.17
3494	VALVES & FITTINGS	50.3	8.81	1.15
3533	OIL FIELD MACHINERY	36.6	6.42	0.75
3714	MOTOR VEHICLE PARTS	93.7	16.42	0.32
3743	RAILROAD EQUIPMENT MFG	239.7	42.00	12.85
4743	RAILROAD CAR RENTAL	89.7	15.72	11.37
5084	INDUSTRIAL EQPT, WHOLESALE	0.8	0.14	--
5088	TRANSPORTATION EQPT WHOLESALE	0.9	0.16	--
	TOTAL MANUFACTURING SALES	479.3	83.98	
	TOTAL NONMANUFACTURING SALES	91.4	16.02	
	COMPANY TOTAL	570.7	100.00	

LINE OF BUSINESS REPORT

PART 2

PLANTS OWNED BY ACF IN EACH INDUSTRY IN WHICH IT OPERATES

IN THESE INDUSTRIES ...	ACF OPERATES THESE PLANTS ...	AT THESE ADDRESSES			PHONE NUMBERS
3041 HOSE AND BELTING					
GAY HOSE	1350 MAPLE	NILES	MI	49120	616-683 2233
POLYMER CORP	2120 FAIRMONT	READING	PA	19603	215-929 5858
POLYPENCO DV ACF	BLUEFIELD HWY	WYTHEVILLE	VA	24382	804-228 5423
3321 GRAY IRON FOUNDRIES					
WKM VALVE DV ACF	126 COLLINS RD	RICHMOND	TX	77469	713-342 8811
3494 VALVES AND FITTINGS					
WKM WELLHEAD DV	1407 PENTECOST RD	KILGORE	TX	75662	214-984 0606
WKM VALVE DV ACF	1650 S MAIN	MISSOURI CITY	TX	77489	713-499 1511
3533 OIL FIELD MACHINERY					
BREWSTER WELLHEAD	740 N MARKET ST	SHREVEPORT	LA	71163	318-222 3254
3714 MOTOR VEHICLE PARTS					
CARTER AUTO PDTS	COOLIDGE RD	LAFAYETTE	TN	37083	615-666 4656
CARTER CARBURETOR	2840 N SPRING AV	ST LOUIS	MO	63107	314-997 7400
3743 RAILROAD EQUIPMENT MFG					
AMCAR DV ACF	2800 DE KALB ST	ST LOUIS	MO	63118	314-773 8870
AMCAR DV ACF	2ND & ARCH STS	MILTON	PA	17847	717-742 7601
AMCAR DV ACF	2300 THIRD AVE	HUNTINGTON	WV	25710	304-529 3211
4743 RAILROAD CAR RENTAL					
SHIPPERS CAR LINE	750 THIRD AV	NEW YORK	NY	10017	212-980 8600
5084 INDUSTRIAL EQPT WHOLESALE					
ACF INDUSTRIES	612 SMITH	HOUSTON	TX	77002	713-236 0921
POLYMER INC	777 S CENTRAL EXPY	RICHARDSON	TX	75080	214-690 0987
5088 TRANSPORTATION EQPT WHOLESALE					
ACF INDUSTRIES	111 SUTTER	SAN FRANCISCO	CA	94104	415-362 1143
ACF INDUSTRIES	PORTER BLDG	PITTSBURGH	PA	15219	412-391 9494

COMPANY TOTAL

ECONOMIC INFORMATION SYSTEMS, Inc.

MARKET SHARES REPORTS

on mining, construction, transportation, utilities, trade and service industries

ɔry behind EIS reports

ediate source of EIS reports is the ıess Data Base. This Data Base is a ensive store of information on the sector of the U.S. economy It conailed records on the top 300,000 establishments with 20 or more emthat account for 85% of business ɜir names, addresses, phone numıs of business, number of employees ıt company ownership.

lition, the EIS Data Base can interа unique body of information—EIS ıtput" ratios. These ratios enable us ate the volume of sales and purf virtually all products and services nd sold by U.S. business establishlibrary of computer programs ento manipulate the information in the e to produce selective marketing remany aspects of the economy.

ıracy and currency of the EIS Data ıves from its structure, source mal maintenance/update procedures.

Founded in 1968, the Data Base was constructed to parallel U.S Census Bureau records on business activity. It incorporates all available information on business establishments and firms published in the classified sections of U.S telephone directories, state and industrial directories, annual reports and SEC 10K statements All this data is reconciled each year with the corresponding "control" totals published by the U.S Census Bureau for industries and regions.

Quarterly updating of the Data Base utilizes an accumulation of new information from published sources, plus feedback from EIS clients on new establishments, changes in plant size and other field-based findings

Many types of reports can be furnished from the EIS Data Base Among them are

Shipments and Share-of-Market Reports on Manufacturing Industries. These reports analyze any manufacturing industry in terms of key producers and ownership structure.

Market Share Reports on "Non-Manufacturing" Industries. These reports, concentrating on commercial/service industries, identify and rank by market share all major companies and their subsidiaries.

Line of Business Reports analyze individual companies in terms of sales, market share and diversity of operations

Market Potential Reports identify establishments and firms that use any industrial product or service, with estimates of the amoun each one uses.

Market Penetration Analyses utilize your own customer lists to build a profile of your company's share-of-market in each industry in which it operates.

Market Projection Reports forecast the growth trends of business markets for any of your company's products or services.

For detailed information on these reports, and the full scope of EIS services, contact Economic Information Systems, Inc. by phone or mail.

MARKET SHARES REPORTS:

The reports that identify, and rank by market share, all companies in key non-manufacturing industries

Portion of a typical EIS Market Shares Report—on SIC 5311, Department Stores

RANKING BY MKT. SHARE	PARENT COMPANY NAME	BRANCHES OWNED BY PARENT CO. IN SIC 5311	COMPANY AND BRANCH ADDRESSES (PHONE NO. OMITTED)*				EMPL. SIZE CODE	ANNUAL SALES ($ MIL)
4	FEDERATED DEPT STORES	P*	222 W 7TH ST	CINCINNATI	OH	45202	9	2,711.3
		ABRAHAM & STRAUSS	WEST MONTAUK HWY	BABYLON	NY	11704	2	
		ABRAHAM & STRAUSS	420 FULTON ST	BROOKLYN	NY	11201	3	
		A & S, REGO PARK	90-1 QUEENS BLVD	ELMHURST	NY	11373	3	
		BLOOMINGDALES	6111 188TH ST	FRESH MEADOWS	NY	11365	3	
		A & S, GARDEN CITY	855 FRANKLIN AV	GARDEN CITY	NY	11530	2	
		ETC.						
5	ALLIED STORES CORP	P*	1114 AVE AMERICAS	NEW YORK	NY	10036	9	1,741.1
		DM READ CO	180 BROAD ST	BRIDGEPORT	CT	06604	1	
		DM READ CO	FEDERAL & NABBY RDS	DANBURY	CT	06810	1	
		DM READ CO	TRUMBELL SHOP PARK	TRUMBELL	CT	06611	1	
		ALMART	CONCORD TPKE	WILMINGTON	DE	19803	2	
		POMEROYS	CONCORD MALL	WILMINGTON	DE	19803	2	
		ETC.						
6	ASSOCIATED DRY GOODS	P*	417 5TH AVE	NEW YORK	NY	10016	8	1,471.2
		GOLDWATERS	3100 N CENTRAL AVE	PHOENIX	AZ	85012	3	
		GOLDWATERS	SCOTTSDALE & CAMELBACK	SCOTTSDALE	AZ	85251	2	
		ETC.						

"P" designates public company registered with SEC (An "F" appearing in this position would designate a company with 10% or more foreign ownership.)

What's in the Report?

An EIS Market Shares Report identifies and ranks the major companies in the mining, construction, transportation, utilities, trade and service industries.

In each industry in these groupings, the report ranks the companies in high-to-low sequence, according to sales volume. The report specifies each company's annual sales, and its market share (expressed as a percentage of total industry sales).

In addition, the report furnishes the names, addresses and the telephone numbers of all establishments and subsidiaries owned by each company, where those establishments operate in the same industry. The establishments are grouped under the parent company heading, so the structure and ownership pattern of the company is clearly visible.

An employment size code is included for each establishment, enabling you to estimate the contribution of each establishment to corporate revenues.

How is the Report used?

You can use a Market Shares Report for many marketing, sales and corporate planning purposes. Here are just a few examples:

To gauge your own company's ranking in an industry and to identify your competitors and their rankings—as a guide in setting marketing objectives. To scan an industry for merger or acquisition possibilities. To use as an initial guideline in analyzing the companies in an industry for investment opportunities. To pinpoint the companies that warrant special sales handling because of their size, and the number and location of their subsidiary establishments.

What Reports are available?

EIS Market Shares Reports are [illegible] the industries listed inside this fol[illegible]

Since the purpose of the repo[illegible] vide unique data on corporate c[illegible] or market domination in an indu[illegible] are offered only for those indu[illegible] have companies in a variety of [illegible] Market Shares Reports are not of [illegible] dustries characterized by comp[illegible] proximately equal size (such as b[illegible] used car dealers, etc.) where mar[illegible] tion is not a factor.

However, EIS can furnish sp[illegible] on these "non-concentrated" [illegible] These reports would identify th[illegible] ments in the industry, but would a[illegible] in state-county sequence, instea[illegible] them by market share.

ECONOMIC INFORMATION SYSTEMS, Inc.

MARKET SHARES REPORTS

on mining, construction, transportation, utilities, trade and service industries

ɔry behind EIS reports

ediate source of EIS reports is the ıess Data Base. This Data Base is a ɜnsive store of information on the sector of the U.S. economy. It conailed records on the top 300,000 establishments with 20 or more emhat account for 85% of business ɜir names, addresses, phone numıs of business, number of employees ıt company ownership.

lition, the EIS Data Base can inter- a unique body of information—EIS ıtput" ratios. These ratios enable us ate the volume of sales and pur- f virtually all products and services nd sold by U.S. business establish- library of computer programs en- to manipulate the information in the e to produce selective marketing remany aspects of the economy.

ıracy and currency of the EIS Data ıves from its structure, source ma- maintenance/update procedures.

Founded in 1968, the Data Base was constructed to parallel U.S Census Bureau records on business activity. It incorporates all available information on business establishments and firms published in the classified sections of U.S telephone directories, state and industrial directories, annual reports and SEC 10K statements. All this data is reconciled each year with the corresponding "control" totals published by the U.S Census Bureau for industries and regions.

Quarterly updating of the Data Base utilizes an accumulation of new information from published sources, plus feedback from EIS clients on new establishments, changes in plant size and other field-based findings.

Many types of reports can be furnished from the EIS Data Base Among them are

Shipments and Share-of-Market Reports on Manufacturing Industries. These reports analyze any manufacturing industry in terms of key producers and ownership structure

Market Share Reports on "Non-Manufacturing" Industries These reports, concentrating on commercial/service industries, identify and rank by market share all major companies and their subsidiaries.

Line of Business Reports analyze individual companies in terms of sales, market share and diversity of operations

Market Potential Reports identify establishments and firms that use any industrial product or service, with estimates of the amoun each one uses.

Market Penetration Analyses utilize your own customer lists to build a profile of your company's share-of-market in each industry in which it operates.

Market Projection Reports forecast the growth trends of business markets for any of your company's products or services.

For detailed information on these reports, and the full scope of EIS services, contact Economic Information Systems, Inc. by phone or mail.

MARKET SHARES REPORTS:

The reports that identify, and rank by market share, all companies in key non-manufacturing industries

Portion of a typical EIS Market Shares Report—on SIC 5311, Department Stores

RANKING BY MKT. SHARE	PARENT COMPANY NAME	BRANCHES OWNED BY PARENT CO. IN SIC 5311	COMPANY AND BRANCH ADDRESSES (PHONE NO. OMITTED)*				EMPL. SIZE CODE	ANNUAL SALES ($ MIL)
4	FEDERATED DEPT STORES	P*	222 W 7TH ST	CINCINNATI	OH	45202	9	2,711.3
	ABRAHAM & STRAUSS		WEST MONTAUK HWY	BABYLON	NY	11704	2	
	ABRAHAM & STRAUSS		420 FULTON ST	BROOKLYN	NY	11201	3	
	A & S, REGO PARK		90-1 QUEENS BLVD	ELMHURST	NY	11373	3	
	BLOOMINGDALES		6111 188TH ST	FRESH MEADOWS	NY	11365	3	
	A & S, GARDEN CITY		855 FRANKLIN AV	GARDEN CITY	NY	11530	2	
	ETC.							
5	ALLIED STORES CORP	P*	1114 AVE AMERICAS	NEW YORK	NY	10036	9	1,741.1
	DM READ CO		180 BROAD ST	BRIDGEPORT	CT	06604	1	
	DM READ CO		FEDERAL & NABBY RDS	DANBURY	CT	06810	1	
	DM READ CO		TRUMBELL SHOP PARK	TRUMBELL	CT	06611	1	
	ALMART		CONCORD TPKE	WILMINGTON	DE	19803	2	
	POMEROYS		CONCORD MALL	WILMINGTON	DE	19803	2	
	ETC.							
6	ASSOCIATED DRY GOODS	P*	417 5TH AVE	NEW YORK	NY	10016	8	1,471.2
	GOLDWATERS		3100 N CENTRAL AVE	PHOENIX	AZ	85012	3	
	GOLDWATERS		SCOTTSDALE & CAMELBACK	SCOTTSDALE	AZ	85251	2	
	ETC.							

"P" designates public company registered with SEC (An "F" appearing in this position would designate a company with 10% or more foreign ownership.)

What's in the Report?

An EIS Market Shares Report identifies and ranks the major companies in the mining, construction, transportation, utilities, trade and service industries.

In each industry in these groupings, the report ranks the companies in high-to-low sequence, according to sales volume. The report specifies each company's annual sales, and its market share (expressed as a percentage of total industry sales).

In addition, the report furnishes the names, addresses and the telephone numbers of all establishments and subsidiaries owned by each company, where those establishments operate in the same industry. The establishments are grouped under the parent company heading, so the structure and ownership pattern of the company is clearly visible.

An employment size code is included for each establishment, enabling you to estimate the contribution of each establishment to corporate revenues.

How is the Report used?

You can use a Market Shares Report for many marketing, sales and corporate planning purposes. Here are just a few examples:

To gauge your own company's ranking in an industry, and to identify your competitors and their rankings—as a guide in setting marketing objectives. To scan an industry for merger or acquisition possibilities. To use as an initial guideline in analyzing the companies in an industry for investment opportunities. To pinpoint the companies that warrant special sales handling because of their size, and the number and location of their subsidiary establishments.

What Reports are available?

EIS Market Shares Reports are available for the industries listed inside this folder.

Since the purpose of the reports is to provide unique data on corporate competition or market domination in an industry, they are offered only for those industries that have companies in a variety of sizes. Market Shares Reports are not offered for industries characterized by companies of approximately equal size (such as b... used car dealers, etc.) where market domination is not a factor.

However, EIS can furnish special reports on these "non-concentrated" industries. These reports would identify the companies in the industry, but would arrange them in state-county sequence, instead of ranking them by market share.

ıployment and Earnings
:tober 1981

epartment of Labor
ı of Labor Statistics

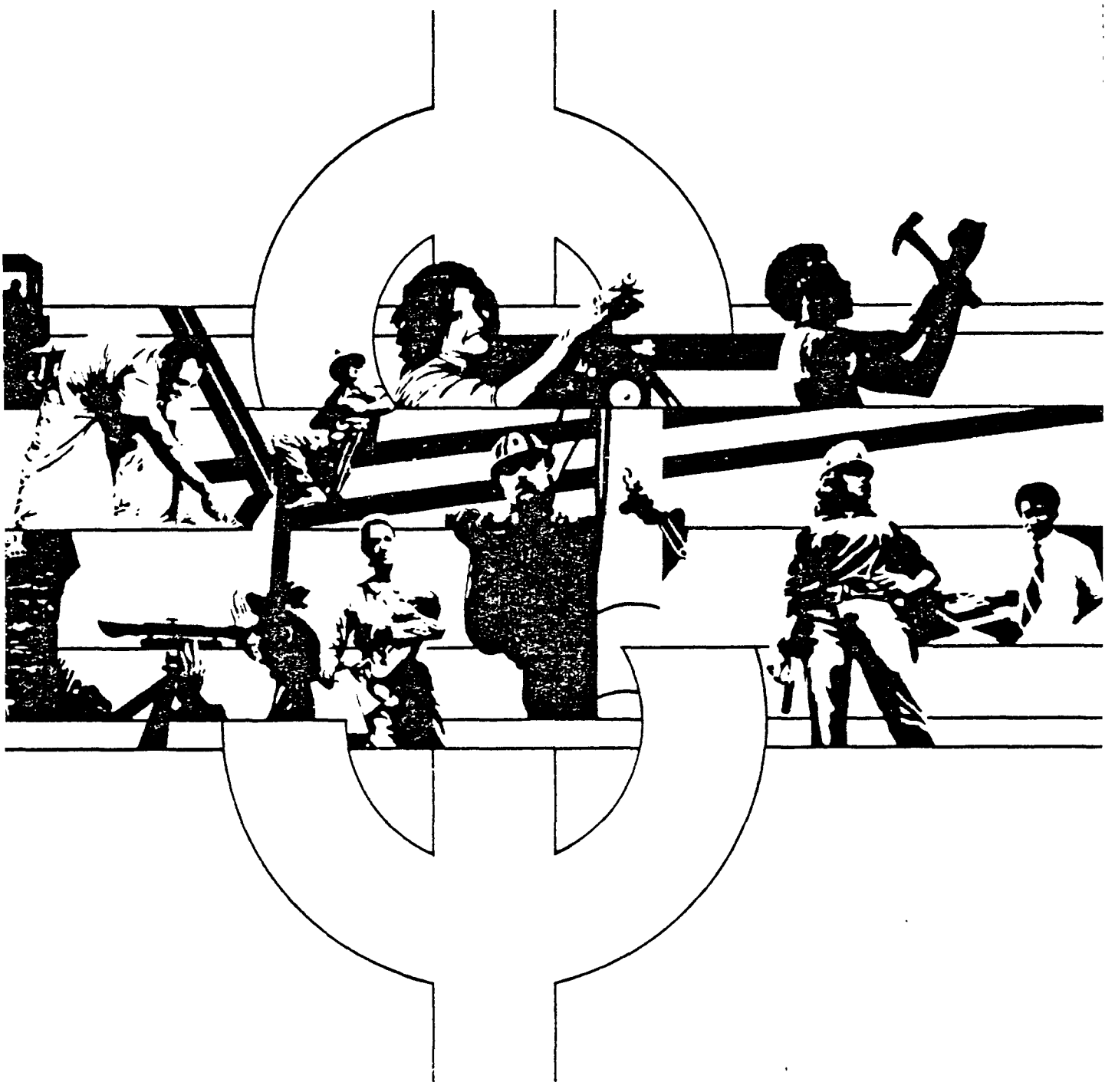

U.S. DEPARTMENT OF LABOR
Raymond J. Donovan, Secretary

BUREAU OF LABOR STATISTICS
Janet L. Norwood, Commissioner

Employment and Earnings is prepared by the Division of Monthly Industry Employment Statistics and the Division of Employment and Unemployment Analysis in collaboration with the Division of Special Publications. The data are collected by the Bureau of the Census (Department of Commerce), State Employment Security Agencies, and State Departments of Labor in cooperation with the Bureau of Labor Statistics. A brief description of the cooperative statistical programs of the BLS with these agencies is presented in the Explanatory Notes. The State agencies are listed on the inside back cover.

Employment and Earnings may be ordered through the Superintendent of Documents, U.S. Government Printing Office, Washington, D.C. 20402. Subscription price per year $22 domestic, and $27.50 foreign. Single copy $2.75. Annual supplement $3.25. Prices are subject to change by the U.S. Government Printing Office.

Communications on editorial matters should be addressed to: Editors, Employment and Earnings, Bureau of Labor Statistics, Washington, D.C. 20212. Inquiries regarding the text and *Household Data* should be addressed to: Attention of Gloria P Green, or phone: (202) 523-1944. Inquiries relating to *Establishment Data* and all other tables should be addressed to: Attention of Gloria P. Goings, or phone: (202) 523-1487. Send correspondence on circulation and subscription matters (including address changes) to the Superintendent of Documents.

The Secretary of Labor has determined that publication of this periodical is necessary in the transaction of the public business required by law of this Department. Use of funds for printing this periodical has been approved by the Director of the Office of Management and Budget through July 1, 1985. Controlled circulation postage paid at Riverdale, Md.

Unless specifically identified as copyright, material in this publication is in the public domain and may, with appropriate credit, be reproduced without permission.

Library of Congress Catalog Number 70-11379.

Employment and Earnings (Dept. of Labor Pub.) (USPS 081-990)

Calendar of Features

In addition to the monthly data appearing regularly in *Employment and Earnings* special features appear in most of the issues as shown below:

Household data

Annual averages

Revised seasonally adjusted series — Jar

Quarterly averages: Seasonally adjusted data, persons not in labor force, persons of Hispanic origin, Vietnam-era veterans and nonveterans, poverty-nonpoverty area data, family relationship data, weekly earnings data — Jar, Ju

Establishment data

National annual averages:

Industry divisions (preliminary)

Industry detail (final)

Women employment detail (final)

National data adjusted to new benchmarks

Revised historical national data adjusted to new benchmarks — Supp

Revised seasonally adjusted series

State and area annual averages

Area definitions

State and area unemployment data

Annual averages

[1] The issue that introduces new benchmark varies The July 1981 troduced March 1980 benchmarks

[2] Month of publication of annual supplement varies The latest sup was published in September 1980

[3] Issue varies Latest revised data introduced July 1981

[4] These data first introduced in the May 1981 issue

000902

Energy Data System

ym: EDS
sampled to generate data: Other No specific media: Data related to fossil fuel combustion taken from Department of Energy forms on the utility sector.
of data collection/monitoring: Point source data collection Utility power plants (annual and monthly reports)
base status: Update terminated

ACT: The data base stores fuel quality and consumption data, plant design and tion data, emission regulations, compliance information, future megawatt ities, diffusion modeling results, and air quality data. Much of the data in nergy Data System are extracted from existing automated data systems. The y Data System is unique, however, in that it combines these data in a single base and thus provides a capability to relate emissions data, fuel consumption and air quality data.

ollutant parameters include: Cost/economic data
Flow rates
Location
Temperature
Volume/mass measures
utility boiler and stack parameters
utility plant annual and monthly fossil fuel use
individual fuel procurements
fuel characteristics

ng study time period is 01/01/69 to 12/30/78
nation of data collection: Occurred 10/30/79

ency of data collection: monthly, annually and as needed before termination

. estimated number of observations is 250000.

base includes: Raw data/observations
Summary or aggregate observations

. number of stations or sources covered is 1200.
r of facilities covered is 1200.

aphic coverage of data base: National
tion identifiers of station/source for each record are: State
County
SMSA
City
Town/township
Street address

Coordinates
latitude/longitude
UTM

Facility identifiers include: Plant facility name
Plant location
Parent corporation name
Parent corporation location
Street address

Pollutant identification data are: Uncoded

Limitations: Regulation data on State Implementation Plans is dated January 1, 19
boiler identification codes recorded as on original Department of Energy forms, therefore inconsistencies occur. Some quality assurance aspects not applicable.

Lab audit: Data not based on lab analysis.
Precision and accuracy estimates are not available
Edit coordinate data checked to ensure that the plant is located in county specified.

Data collected by: Self reporting utility plants
Other federal agency - Department of Energy
Data analyzed by: Self reporting utility plants
Other federal agency - Department of Energy
Data base does not identify specific laboratory performing analysis.

Program evaluation is the primary purpose for data collection.
data used to plan air quality strategies is the secondary purpose for data collection.
No statutory requirement: Department of Energy mandated by Public Law to collect this data
Form of available reports and outputs: On-line computer
Current regular users of data base: no known current users
Users: EPA headquarter offices - Stationary Source Enforcement Division; Office Air Quality Planning and Standards; Office of Planning of Evaluation; Of: of Radiation Programs
Confidentiality: Limitr on access within EPA and outside agency for some data
Primary physical location of data: NCC/UNIVAC
Form of data storage: Magnetic disc
Data access: Commercial software System 2000

Contact - Subject matter: Bob Short (919) 541-5420
Contact - Computer-related: George Duggan (919) 541-5420
Contact - responsible EPA Office: Dr. Al Wehe (919) 541-5310

Charge for non-EPA use: yes
Frequency of master file up-date: Other data base update terminated

Related EPA data bases: National Emissions Data System (NEDS); Storage and Retri of Aerometric Data (SAROAD)

Person completing form: Bob Short

DATA SOURCE D: ECDIN
ENVIRONMENTAL CHEMICALS DATA AND INFORMATION NETWORK

Review Date: February, 1981

D.1 BACKGROUND

The Environmental Chemicals Data and Information Network (ECDIN) project was established to provide a data bank of environmental chemicals for European communities.

ECDIN was begun in 1973 and is still in pilot phase. When the system is fully operational, it will provide information on chemical products of environmental significance. Eventually, the system is expected to include 20,000 - 30,000 chemicals.

The finished ECDIN system will cover chemical identity, physical-chemical properties, chemical production, and health and environmental effects.

D.2 STATUS

For the pilot phase, 4,000 chemicals were selected. From this group, a smaller list of priority compounds were chosen for data collection. The identification category is completed for most compounds. About one half of the entered compounds include toxicity data, and more detailed information is present for an even smaller number of compounds.

Whenever possible, ECDIN will answer questions directed to the system regarding chemicals and their effects. Users can gain direct access to the data bank by contacting ECDIN. At this point, there are no charges for answering queries.

D.3 SCIENTIFIC PARAMETERS

It is planned that ECDIN will have 11 categories of data, some of which are further divided into more specific scientific parameters. The 11 scientific parameters can be roughly divided into eight general groups:

- Chemical Identifiers
- Physical-Chemical Properties
- Analytical Methods
- Manufacturing Information
- Environmental Effects
- Environmental Fate
- Health Effects
- Legal Implications

These broad groups are explained in detail below.

- **Chemical Identifiers**

Identification

In order to identify a chemical or compound, ECDIN provides the following scientific parameters:

- Preferred systematic name
- Synonyms, including foreign names and trade names
- CAS Registry Number
- Wiswesser Line Notation

Chemical Structure Information

In the proposed format of ECDIN, a chemical structure diagram is provided for each chemical. Since some toxic chemical structures are unknown, this may not be available for every compound.

- **Physical-Chemical Properties**

This section refers to the properties such as boiling point and molecular weight. Although at this time no further division of this category is made, ECDIN does state that more specific divisions of some categories are used.

- **Analytical Methods**

This field refers to the methods used to determine the chemical's presence in the environment.

- **Manufacturing Information**

Supply, Production and Trade

This field is divided into seven more specific areas. These are:

- Manufacturing process
- Producers
- Production
- Consumption
- Capacity
- Foreign trade
- Bulk displacements

Transport, Packing, Handling and Storage

This category is primarily concerned with the hazards and safety recommendations relating to dealing with toxic chemicals during these activities.

Use and Disposal

Most of the data in this field are unstructured and, by necessity, the category covers a wide variety of data types.

- **Environmental Fate**

Dispersion and Transformation in the Environment

This topic deals with the behavior of the chemical in the environment. It provides insight into where the compound might accumulate and what its by-products are.

- **Environmental Effects**

Effects of the Chemical on the Environment

This category is concerned with environmental effects data. More specific types of data are contained in this category. They are as follows:

- Effects on ecosystems
- Effects on inanimate material
- Effects on plants

- **Health Effects**

Effects of the Chemical on Health

This section includes all human and environmental toxicity data. The more specific categories are as follows:

- Human toxicity
- Animal toxicity data
- Terrestrial toxicity
- Aquatic toxicity
- Microorganism toxicity
- Effects on in-vitro systems
- Effects on reproduction (including teratogenicity)
- Carcinogenicity
- Mutagenicity
- Allergic and immunological reactions
- Odor threshold values

Occupational Safety and Health

The safety and health recommendations and hazards for the workplace and employees are included in this category.

- **Legal Implications**

ECDIN provides these data in the form of a summary of the most important points. In order to find further detail regarding this section, the standard references must be consulted.

D.4 ACCESSIBILITY

ECDIN is accessible through EURONET although it is only in the pilot phase at this time. Since the data base is only in preliminary form, there is no user fee at present.

D.5 DEVELOPMENT PLANS

Several enhancements will eventually be required. These areas are understood by the data base developers, but at present, data are being collected and coded for the given fields only.

D.6 REFERENCES

1. ECDIN Input Format Manual

Chemical Substances Regulated by the Occupational Safety and Health Administration

The following is a listing of those chemical substances regulated by SHA. Physical agents are not included in this listing. Full ocumentation of OSHA regulations concerning the listed substances can be ound in 29 CFR 1910.

rtaldehyde
itic acid
itic anhydride
itone
itonitrile
ityiene dichloride, see 1, 2-
chloroethylene
ityiene tetrabromide
plein
ylamide—Skin
in—Skin
l alcohol—Skin
l chloride
ltylglycidyl ether (AGE)
l propyl disulfide
minoethanol, see Ethanola-
ine
minopyridine
monia
monium sulfamate (Ammate)
myl acetate
-Amyl acetate
ine—Skin
idine (o, p-isomers)—Skin
mony and compounds (as Sb)
U (alpha naphthyl thiourea)
nic organic compounds (as
s)
ne
phos-methyl—Skin
um (soluble compounds)
nzoquinone, see Quinone
zoyl peroxide
zyl chloride
enyl, see Diphenyl
n oxide
oron trifluoride
nine
noform—Skin
diene (1, 3-butadiene)
nethiol, see Butyl mercaptan
tanone
toxy ethanol (Butyl Cello-
lve)—Skin
l acetate (n-butyl acetate)
Butyl acetate
Butyl acetate
l alcohol
Butyl alcohol
Butyl alcohol
rtylamine—Skin
rt-Butyl chromate (as CrO_3)—
in
tyl glycidyl ether (BGE)
l mercaptan
t-Butyltoluene
ium oxide
phor
aryl (Sevin®)
on black
on dioxide
on monoxide
rdane—Skin
nated camphene—Skin
nated diphenyl oxide
lorine
ine dioxide

C Chlorine trifluoride
C Chloroacetaldehyde
a-Chloroacetophenone (phenacylchloride)
Chlorobenzene (monochlorobenzene)
o-Chlorobenzylidene malononitrile (OCBM)
Chlorobromomethane
2-Chloro-1,3-butadiene, see Chloroprene.
Chlorodiphenyl (42 percent Chlorine)—Skin
Chlorodiphenyl (54 percent Chlorine)—Skin
1-Chloro, 2,3-epoxypropane, see Epichlorhydrin
2-Chloroethanol, see Ethylene chlorohydrin
Chloroethylene, see Vinyl chloride
C Chloroform (trichloromethane)
1-Chloro-1-nitropropane
Chloropicrin
Chloroprene (2-chloro-1,3- butadiene)—Skin.
Chromium sol. chromic, chromous salts as Cr
Metal and insol salts
Coal tar pitch volatiles (benzene soluble fraction) anthracene, BaP, phenanthrene, acridine, chrysene, pyrene
Cobalt, metal fume and dust
Copper fume
Dusts and Mists
Cotton dust (raw)
Crag® herbicide
Cresol (all isomers)—Skin
Crotonaldehyde
Cumene—Skin.
Cyanide (as CN)—Skin
Cyclohexane
Cyclohexanol
Cyclohexanone
Cyclohexene
Cyclopentadiene
2,4-D
DDT—Skin
DDVP—Skin
Decaborane—Skin
Demeton®—Skin
Diacetone alcohol (4-hydroxy-4-methyl-2-pentanone)
1,2-diaminoethane, see Ethylenediamine
Diazomethane
Diborane
Dibutyl phosphate
Dibutylphthalate
C o-Dichlorobenzene
p-Dichlorobenzene
Dichlorodifluoromethane
1,3-Dichloro-5,5-dimethyl hydantoin
1,1-Dichloroethane
1,2-Dichloroethylene
C Dichloroethyl ether—Skin
Dichloromethane, see Methylenechloride
Dichloromonofluoromethane

C 1,1-Dichloro-1-nitroethane
1,2-Dichloropropane, see Propylenedichloride
Dichlorotetrafluoroethane
Dieldrin—Skin
Diethylamine
Diethylamino ethanol—Skin
Diethylether, see Ethyl ether
Difluorodibromomethane
C Diglycidyl ether (DGE)
Dihydroxybenzene, see Hydroquinone
Diisobutyl ketone
Diisopropylamine—Skin
Dimethoxymethane, see Methylal
Dimethyl acetamide—Skin
Dimethylamine
Dimethylaminobenzene, see Xylidene
Dimethylaniline (N-dimethyl- aniline)—Skin
Dimethylbenzene, see Xylene
Dimethyl 1,2-dibromo-2,2-dichloroetnyl phosphate, (Dibrom).
Dimethylformamide—Skin
2,6-Dimethylheptanone, see Diisobutyl ketone
1,1-Dimethylhydrazine—Skin
Dimethylphthalate
Dimethylsulfate—Skin
Dinitrobenzene (all isomers)—Skin
Dinitro-o-cresol—Skin
Dinitrotoluene—Skin
Dioxane (Diethylene dioxide)—Skin
Diphenyl
Diphenylmethane diisocyanate (see Methylene bisphenyl isocyanate (MDI)
Dipropylene glycol methyl ether—Skin
Di-sec, octyl phthalate (Di-2- ethylhexylphthalate)
Endrin—Skin
Epichlorhydrin—Skin
EPN—Skin
1,2-Epoxypropane, see Propylene-oxide
2,3-Epoxy-1-propanol, see Glycidol
Ethanethiol, see Ethylmercaptan
Ethanolamine
2-Ethoxyethanol—Skin
2-Ethoxyethylacetate (Cello-solve acetate)—Skin
Ethyl acetate
Ethyl acrylate—Skin
Ethyl alcohol (ethanol)
Ethylamine
Ethyl sec-amyl ketone (5- methyl-3-heptanone)
Ethyl benzene
Ethyl bromide
Ethyl butyl ketone (3- Heptanone)
Ethyl chloride
Ethyl ether
Ethyl formate
C Ethyl mercaptan

Ethyl silicate
Ethylene chlorohydrin—Skin
Ethylenediamine
C Ethylene glycol dinitrate and/or Nitroglycerin—Skin
Ethylene glycol monomethyl ether acetate, see Methyl cellosolve acetate
Ethylene imine—Skin
Ethylene oxide
Ethylidine chloride, see 1,1- Dichloroethane
N-Ethylmorpholine—Skin
Ferbam
Ferrovanadium dust
Fluoride (as F)
Fluorine
Fluorotrichloromethane
Formic acid
Furfural—Skin
Furfuryl alcohol
Glycidol (2,3-Epoxy-1- propanol)
Glycol monoethyl ether, see 2-Ethoxyethanol
Guthion®, see Azinphosmethyl
Hafnium
Heptachlor—Skin
Heptane (n-heptane)
Hexachloroethane—Skin
Hexachloronaphthalene—Skin
Hexane (n-hexane)
2-Hexanone
Hexone (Methyl isobutyl ketone)
sec-Hexyl acetate
Hydrazine—Skin
Hydrogen bromide
C Hydrogen chloride
Hydrogen cyanide—Skin
Hydrogen peroxide (90%)
Hydrogen selenide
Hydroquinone
C Iodine
Iron oxide fume
Isoamyl acetate
Isoamyl alcohol
Isobutyl acetate
Isobutyl alcohol
Isophorone
Isopropyl acetate
Isopropyl alcohol
Isopropylamine
Isopropylether
Isopropyl glycidyl ether (IGE)
Ketene
Lindane—Skin
Lithium hydride
L.P.G. (liquified petroleum gas)
Magnesium oxide fume
Malathion—Skin
Maleic anhydride
C Manganese
Mesityl oxide
Methanethiol, see Methyl mercaptan
Methoxychlor
2-Methoxyethanol, see Methyl cellosolve
Methyl acetate
Methyl acetylene (propyne)

Methyl acetylene-propadiene mixture (MAPP)
Methyl acrylate—Skin
Methylal (dimethoxymethane)
Methyl alcohol (methanol)
Methylamine
Methyl amyl alcohol, see Methyl isobutyl carbinol
Methyl (n-amyl) ketone (2- Heptanone)
C Methyl bromide—Skin
Methyl butyl ketone, see 2- Hexanone
Methyl cellosolve—Skin
Methyl cellosolve acetate—Skin
Methyl chloroform
Methylcyclohexane
Methylcyclohexanol
o-Methylcyclohexanone—Skin
Methyl ethyl ketone (MEK), see 2-Butanone
Methyl formate
Methyl iodide—Skin
Methyl isobutyl carbinol—Skin
Methyl isobutyl ketone, see Hexone
Methyl isocyanate—Skin
C Methyl mercaptan
Methyl methacrylate
Methyl propyl ketone, see 2- Pentanone
C# Methyl styrene
C Methylene bisphenyl isocyanate (MDI)
Molybdenum.
Soluble compounds
Insoluble compounds
Monomethyl aniline—Skin
C Monomethyl hydrazine— Skin
Morpholine—Skin
Naphtha (coaltar)
Naphthalene
Nickel carbonyl
Nickel, metal and soluble cmpds, as Ni
Nicotine—Skin
Nitric acid
Nitric oxide
p-Nitroaniline—Skin
Nitrobenzene—Skin
p-Nitrochlorobenzene—Skin
Nitroethane
C Nitrogen dioxide
Nitrogen trifluoride
C Nitroglycerin—Skin
Nitromethane
1-Nitropropane
2-Nitropropane
Nitrotoluene—Skin
Nitrotrichloromethane, see Chloropicrin
Octachloronaphthalene—Skin
Octane
Oil mist, mineral
Osmium tetroxide
Oxalic acid
Oxygen difluoride
Ozone
Paraquat—Skin
Parathion—Skin
Pentaborane
Pentachloronaphthalene—Skin
Pentachlorophenol—Skin
Pentane
2-Pentanone
Perchloromethyl mercaptan
Perchloryl fluoride
Petroleum distillates (naphtha)
Phenol—Skin
p-Phenylene diamine—Skin
Phenyl ether (vapor)
Phenyl ether-biphenyl mixture (vapor)
Phenylethylene, see Styrene
Phenyl glycidyl ether (PGE)
Phenylhydrazine—Skin
Phosdrin (Mevinphos®)— Skin
Phosgene (carbonyl chloride)
Phosphine
Phosphoric acid
Phosphorus (yellow)
Phosphorus pentachloride
Phosphorus pentasulfide
Phosphorus trichloride
Phthalic anhydride
Picric acid—Skin
Pival® (2-Pivalyl-1,3- indandione)
Platinum (Soluble salts) as Pt
Propane
n-Propyl acetate
Propyl alcohol
n-Propyl nitrate
Propylene dichloride
Propylene imine—Skin
Propylene oxide
Propyne, see Methylacetylene
Pyrethrum
Pyridine
Quinone
Rhodium, Metal fume and dusts, as Rh
Soluble salts
Ronnel
Rotenone (commercial)
Selenium compounds (as Se)
Selenium hexafluoride
Silver, metal and soluble compounds
Sodium fluoroacetate (1080)—Skin
Sodium hydroxide
Stibine
Stoddard solvent
Strychnine
Sulfur dioxide
Sulfur hexafluoride
Sulfuric acid
Sulfur monochloride
Sulfur pentafluoride
Sulfuryl fluoride
Systox, see Demeton®
2,4,5T
Tantalum
TEDP—Skin
Tellurium
Tellurium hexafluoride
TEPP—Skin
C Terphenyls
1,1,1,2-Tetrachloro-2 2-difluoroethane
1,1,2,2-Tetrachloro-1,2-difluoroethane
1,1,2,2-Tetrachloroethane—Skin
Tetrachloromethane, see Carbon tetrachloride
Tetrachloronaphthalene—Skin
Tetraethyl lead (as Pb)—Skin
Tetrahydrofuran
Tetramethyl lead (as Pb)— Skin
Tetramethyl succinonitrile— Skin
Tetranitromethane
Tetryl (2,4,6-trinitrophenyl- methylnitramine)—Skin
Thallium (soluble compounds)—Skin as Tl
Thiram
Tin (inorganic cmpds, except oxides)
Tin (organic cmpds)
C Toluene-2,4-diisocyanate
o-Toluidine—Skin
Toxaphene, see Chlorinated camphene
Tributyl phosphate
1,1,1-Trichloroethane, see Methyl chloroform
1,1,2-Trichloroethane—Skin
Titaniumdioxide
Trichloromethane, see Chloroform
Trichloronaphthalene—Skin
1,2,3-Trichloropropane
1,1,2-Trichloro 1,2,2-trifluoroethane
Triethylamine
Trifluoromonobromomethane
2,4,6-Trinitrophenol, see Picric acid
2,4,6-Trinitrophenylmethyl- nitramine, see Tetryl
Trinitrotoluene—Skin
Triorthocresyl phosphate
Triphenyl phosphate
Turpentine
Uranium (soluble compounds)
Uranium (insoluble compounds)
C Vanadium
V_2O_5 dust
V_2O_5 fume
Vinyl benzene, see Styrene
Vinylcyanide, see Acrylonitrile
Vinyl toluene
Warfarin
Xylene (xylol)
Xylidine—Skin
Yttrium
Zinc chloride fume
Zinc oxide fume
Zirconium compounds (as Zr)
Benzene (Z37 40-1969)
Beryllium and beryllium compounds (Z37 29-1970)
Cadmium fume (Z37 5-19
Cadmium dust (Z37 5-19
Carbon disulfide (Z37 3-1
Carbon tetrachloride (Z 1967)
Chromic acid and chr (Z37 7-1971)
Ethylene dibromide (Z 1970)
Ethylene dichloride (Z 1969)
Fluoride as dust (Z37 28-
Formaldehyde (Z37 16-1
Hydrogen fluoride (Z 1969)
Hydrogen sulfide (Z37 2-
Mercury (Z37 8-1971)
Methyl chloride (Z37 18-1
Methylene chloride (1969)
Organo (alkyl) mercury (1969)
Styrene (Z37 15-1969)
Tetrachloroethylene (1967)
Toluene (Z37 12-1967)
Trichloroethylene (Z37 19
4-Nitrobiphenyl
Alpha-naphthylamine
Methyl chloromethyl
3,3'-Dichlorobenzid
Bis-chloromethyl et
Beta-naphthylamine
Benzidine
4-Aminodiphenyl
Beta-propiolactone
2-Acetylaminofluor
4-Dimethylaminoazob
Dimethylaminobenzen
N-nitrosodimethylam
Vinyl chloride
Coke oven emissions
Inorganic arsenic
Lead
1,2-Dibromo-3-chlor
Acrylonitrile

Epidemiological Studies Program System (ESPS) EISD #10209

- **Purpose:**

The ESPS aids research in the health effects of pesticide products by providing a comprehensive data base on health statistics for persons exposed to various pesticides

- **Annual Cost:**

Computer	*Personnel*	*Contract Support*
$32,000	$25,000	$100,000

- **Primary Users:**

The twelve Epidemiological Study Project Groups, who are sponsored under this Program, use the data files to make health effects studies

- **Description:**

This Program has taken over and expanded the Pesticide Community Studies Data System. This Program funds studies of a regional and national scope in such areas as, acute pesticide poisoning, pesticide usage surveys, and chronic effects of pesticide exposure. These study groups use a variety of techniques, such as health examinations, sampling and hospital records in order to develop and maintain a number of data bases. The average master file has 3,000 to 5,000 records with a large number of individual entries. Many of the records are medical histories updated over a period of time.

- **Operation:**

The Health Effects Branch of the Office of Pesticides Program has begun to exercise control over this data systems operation. Tapes containing the data from these individual projects are being delivered to the Branch for their data manipulation. This data is being used to review the findings of the field studies and to develop new statistical analyses and correlations. New software standards and data management techniques are being developed to better coordinate the work of the 12 individual projects.

- **Responsibility:**

System Sponsor: August Vandermer

D3404000002

Establishment Registration Support System

Acronym: ERSS
Media sampled to generate data: pesticide production data
Type of data collection/monitoring: production information for pesticide products.
Data base status: Operational/ongoing

ABSTRACT: A centralized data base is used to support inspection planning and case preparation for pesticide enforcers by maintaining a nationwide file identifying pesticide producing establishments and their types and amounts of annual producti Data covers pesticide products as defined by the Federal Insecticide, Fungicide, Rodenticide Act (FIFRA), identified by product registration numbers. No chemical ingredient data is included.

Non-pollutant parameters include: Compliance data
Industry
Location
Production levels

Ongoing study time period is 01/01/75 to 09/30/80 (present)
Termination of data collection: Not anticipated

Frequency of data collection: annually

Total estimated number of observations is 120000.
Estimated annual increase of observations is 20000.

Data base includes: production volumes reported by producing establishments.

Total number of stations or sources covered is 8000.
Number currently contributing data is 8000.
Number of facilities covered is 8000.

Geographic coverage of data base: International, include foreign product imports U.S.
Location identifiers of station/source for each record are: State
County
City
Street address
EPA Establishment Number

Facility identifiers include: Plant facility name
Plant location
Parent corporation name
Parent corporation location
Street address
EPA Establishment Number

Pollutant identification data have: pesticide registration number codes

collection and analysis procedures: Sampling plan documented
Collection method documented
udit: Data not based on lab analysis.
sion and accuracy estimates are not available
own edit procedures exist.

collected by: Self reporting
analyzed by: data not analyzed

iance or enforcement is the primary purpose for data collection.
am evaluation is the secondary purpose for data collection.
tory authorization is P L 95-396, Section 7 (Federal Insecticide, Fungicide and
ticide Act-FIFRA)
orm number: 158-R-0109
of available reports and outputs: Printouts on request
Machine-readable raw data
it regular users of data base: 300
: EPA headquarter offices - Pesticides and Toxic Substances Enforcement Div.,
OPP, SPRD, BFSD.
EPA regional offices
Other federal agencies, NIH, U.S. Congress
lentiality: Limits on access within EPA and outside agency for some

y physical location of data: NCC/IBM
of data storage: Magnetic tape
ccess: EPA software ERSS MIDSD system number: 3404000002
EPA hardware IBM 370/168

t - Subject matter: Carol Buckingham (202) 755-2647
t - Computer-related: Jean Malachowski (202) 683-0885
t - responsible EPA Office: John Martin (202) 755-1075

for non-EPA use: yes
ncy of master file up-date: Weekly

d EPA systems: Pesticides Enforcement Management System.

completing form: Tim Shaw/John Martin
: EPA/(OE)/(OGE)/(PTSED)/
s: Viar and Company 114 N. Columbus St. Alexandria, VA 22314
(703) 683-0885

Handbook of Labor Statistics

U.S. Department of Labor
Bureau of Labor Statistics
December 1980

Bulletin 2070

3 1283 00015 1949

;000903

Hazardous Waste Site Tracking System

ym: STS
sampled to generate data: No specific media: Inventory of hazardous waste sites with gross amounts of chemicals found at site
of data collection/monitoring: No monitoring data collection
base status: Operational/ongoing

ACT: The data base contains an inventory of potential hazardous waste sites active and inactive, on-site of industrial facilities and off-site. Major ions supported include: inventory and identification, assessment, site ction, hazards, hydrological analysis, and remedial and enforcement actions sary.

ollutant parameters include:
- Compliance data
- Cost/economic data
- Funding data
- Inspection data
- Location
- Physical data
- Political subdivisions
- Population demographics
- Population density
- Site description
- Hazards
- Waste state
- Waste characteristics
- Remedial actions

ng study time period is 08/01/79 to 12/30/80 (present)
nation of data collection: Not anticipated

ency of data collection: As events (e.g. inspections) are done

estimated number of observations is 20821.
ated annual increase of observations is 10000.

base includes: Raw data/observations

number of stations or sources covered is 3000.

aphic coverage of data base: National
ion identifiers of station/source for each record are:
- State
- County
- City
- Street address
- Coordinates
- Latitude/Longitude
- Coordinates

ity identifiers include: Plant facility name

Plant location
Parent corporation name
Street address
SIC code
Dun and Bradstreet number
NPDES

Lab analysis based on EPA-approved or accepted methods.
Lab audit: Data not based on lab analysis.
Precision and accuracy estimates are not available
Edit procedures used but undocumented.

Data collected by: State agency - Every state environmental protection agency
Regional office - Every Regional Office
Contractor - Various contractors
Data analyzed by: Regional office - Every Regional Surveillance and Analysis Division
Contractor lab - Various laboratories
Data base does not identify specific laboratory performing analysis.

Compliance or enforcement is the primary purpose for data collection.
Remedial action is the secondary purpose for data collection.
Program evaluation is the third purpose for data collection.
No statutory requirement: Data collection requirement is to aid in EPA tracking hazardous waste sites
Form of available reports and outputs: Printouts on request
Current regular users of data base: 15 offices
EPA headquarter offices - Hazardous Waste Task Force; SUPERFUND; Office Solid Waste; Office of Enforcement
EPA regional offices
Confidentiality: Limits on access within EPA and outside agency for some data
Primary physical location of data: NCC/IBM
Form of data storage: Magnetic disc
Data access: EPA software Site Tracking System
EPA hardware IBM 370

Contact - Subject matter: Margie Russell (202)426-7810
Contact - Computer-related: Bruce Rothrock (202)426-7240
Contact - responsible EPA Office: Hazardous Waste Task Force (202)426-7810

Charge for non-EPA use: no
Frequency of master file up-date: Weekly

Person completing form: Bruce Rothrock
Office: Office of Enforcement
Address: 401 M St. SW Washington, DC 20460
Phone: (202)426-7240

Pollutants included in data base:
acetaldehyde 75-07-0
acetic acid 64-19-7

301700901

Health and Environmental Effects Data Analysis System

:onym: HEEDA
lia sampled to generate data: toxicological end effects; structure-activity relationship modeling
e of data collection/monitoring: literature and other agency health effects evaluation
:a base status: Funded for development Projected operational date:09/00/81

TRACT: This system is a mechanism for testing and evaluating various chemical ucture/activity relationship models to compare chemicals of known effects to micals of similar structure with well-documented effects. It is the Office of ic Substances repository for known toxicological and environmental effects of micals. The data base contains evaluated health and environmental effects data ined from, inter alia, the GENETOX Program and the U.S. Fish and Wildlife vice. It is still under development and will be operational with a limited unt of data early in 1981.

-pollutant parameters include: Biological data
Chemical data
Health effects
Physical data
mathematical models for structure/activity correlation

oing study time period is 01/01/30 to 09/30/80 (present)
mination of data collection: Not anticipated

quency of data collection: as needed
file building/as funded

al estimated number of observations is 455.
imated annual increase of observations is 800.

a base includes: evaluated data generated by expert groups

al number of stations or sources covered is 6.
ber currently contributing data is 5.
ber of facilities covered is 0.

graphic coverage of data base: International
ility identifiers include: Not applicable
lutant identification data have: CAS registry number codes

itations: Concentrations/levels of a chemical in a particular media are not luded in this data base. Toxicity and physical-chemical data are included. its are proposed on access within EPA and outside agency for some data.

a collection and analysis procedures: Sampling plan documented
analysis not based on EPA-approved or accepted methods.

Precision and accuracy estimates exist but are not included in data base.
Edits on existing Health and Environmental Effects Data Analysis (HEEDA) data. Edit procedures for new data may rely on contributor editing. Some evaluation to be done in-house.

Data collected by: Federal Agencies
industry
published literature
Data analyzed by: Contractor - University of Pennsylvania (cooperative agreem
original HEEDA
EPA headquarters - Assessment Division and Management Suppo
Division/Office of Toxic Substances
Data base does not identify specific laboratory performing analysis.

Risk assessment is the primary purpose for data collection.
Development of regulations or standards is the secondary purpose for data collection.
Statutory authorization is P L 94-469, Section 10 (Toxic Substances Control Act 2609)
Form of available reports and outputs: Unpublished reports format to be established
Printouts on request
On-line computer
Current regular users of data base: unknown
Users: EPA headquarter offices - Office of Toxic Substances
EPA regional offices
Other federal agencies
Confidentiality: Limits on access within EPA and outside agency for some data
Primary physical location of data: Contractor
Form of data storage: Magnetic disc
Data access: EPA software MIDSD system number: 7500000904
University of Pennsylvania IBM-will be moved to the Office of To: Substances December 20, 1980

Contact - Subject matter: Charles Auer (202) 426-9819
Contact - Computer-related: Tony Jover (202) 426-4697
Contact - responsible EPA Office: Paula Miles (202) 426-2447

Charge for non-EPA use: no outside use/access permitted
Frequency of master file up-date: system in transition

Person completing form: Paula Miles
Office: EPA/(OPTS)/(OTS)/(MSD)
Address: 401 M St. SW, Washington, DC
Phone: (202) 426-2447

Pollutants included in data base:
phenobarbital 50-06-6
mitomycin c 50-07-7
oestriol 50-27-1
oestradiol-17beta 50-28-2
d-lysergic acid diethylamide 50-37-3

Table 4. Profile of data collection systems that record environmental inspections—Con.

(Agency designations by acronym are listed in figure 1)

Name of program or system	Agency	Purpose	Topical focus of data		Method of data collection	Population-location-time coverage	Method of data dissemination	Statistics generated
			Health	Environment or individual exposure				
Health Effects Evaluation Data Base	NIOSH	To summarize information obtained from hazard evaluations (HE) requested by employees or employers under the Occupational Safety and Health Act.	Symptoms and medical test results from workers examined during the HE.	Location and name of establishment, Standard Industrial Classification (SIC), hazards, occupations observed, results of environmental samples taken.	Inspection by industrial hygienists and occupational health physician specialists.	Nationwide, 1977-78. A total of 260 HE's are in this file.	Special request reports. Publications.	For internal use.

D9055000903

Industrial Process Evaluations

Acronym: None
Media sampled to generate data: Effluents industrial
Runoff limited
in plant chemical process
Type of data collection/monitoring: Point source data collection pulp and pape
plants, chemical industry, and herbicide a
pesticide manufacturers
Data base status: Operational/ongoing

ABSTRACT: Evaluation of specific industries and industrial processes regarding t
formation of toxicants by (1) National Pollutant Discharge Elimination System (NPDES) permit or Clean Water Act, Section 308 request to industry or (2) EPA contractor. Toxicants beyond the 129 Consent Decree Priority Pollutants are covered. Initial work is dry lab paper study of industrial process followed by chemical and/or biomonitoring testing by facility. Most of the data (90%) suppl. by industry.

Non-pollutant parameters include: Biological data
Chemical data
Concentration measures
Discharge points
Disposal
Geographic subdivision
Industry
Location
Production levels
Test/analysis method
Treatment devices

Ongoing study time period is 01/01/79 to 09/30/80 (present)
Termination of data collection: Not anticipated

Frequency of data collection: as needed

Total estimated number of observations is 4000.
Estimated annual increase of observations is 600-800.

Data base includes: Raw data/observations

Total number of stations or sources covered is 200.
Number currently contributing data is 90.
Number of facilities covered is 60.

Geographic coverage of data base: Selected federal region Region V
Location identifiers of station/source for each record are: State
County
City
Town/township

:ility identifiers include: Plant facility name
Plant location
Parent corporation name
Parent corporation location
Street address
SIC code
NPDES
.lutant identification data are: Uncoded

ıitations: Evaluation for toxicants only (sometimes conventional also). Quality
ıurance varies by facility.

:a collection and analysis procedures: documented in quality assurance project plan
) analysis based on EPA-approved or accepted methods.
) audit is satisfactory for part of the data base.
:cision and accuracy estimates partially exist for the data base.
known edit procedures exist.

:a collected by: Self reporting
Regional office - Surveillance and Analysis Division
Contractor - Dr. Patterson and Associates
:a analyzed by: Self reporting
Regional office - Surveillance and Analysis Division
Contractor lab - through Surveillance and Analysis Division
:a base identifies specific laboratory performing analysis.

'elopment of regulations or standards is the primary purpose for data collection.
ıtutory authorization is P L 90-500 as amended, Section 308 (Clean Water Act-CWA)
m of available reports and outputs: Unpublished reports Individual undistributed reports
'rent regular users of data base: 40
:rs: EPA headquarter offices - Effluent Guidelines Division
EPA regional offices
States
.fidentiality: Limits on access within EPA and outside agency for some
.a
.mary physical location of data: Regional office
m of data storage: Original form (hardcopy, readings)
:a access: Manually

.tact - Subject matter: Glenn D. Pratt/Jon Barney (312) 353-2098
.tact - responsible EPA Office: Glenn D. Pratt/Jon Barney (312) 353-2098

.rge for non-EPA use: no
'quency of master file up-date: as completed

'son completing form: Glenn Pratt
ice: EPA/Region V/Enforcement Division
.ress: 230 S. Dearborn Chicago, Ill 60604
ne: (312)353-2098

Yankelovich / Part 3:

Toward an ethic of commitment

Savin gambles on a strategy for growth

Industry Week

June 15, 1981

Penton/IPC •

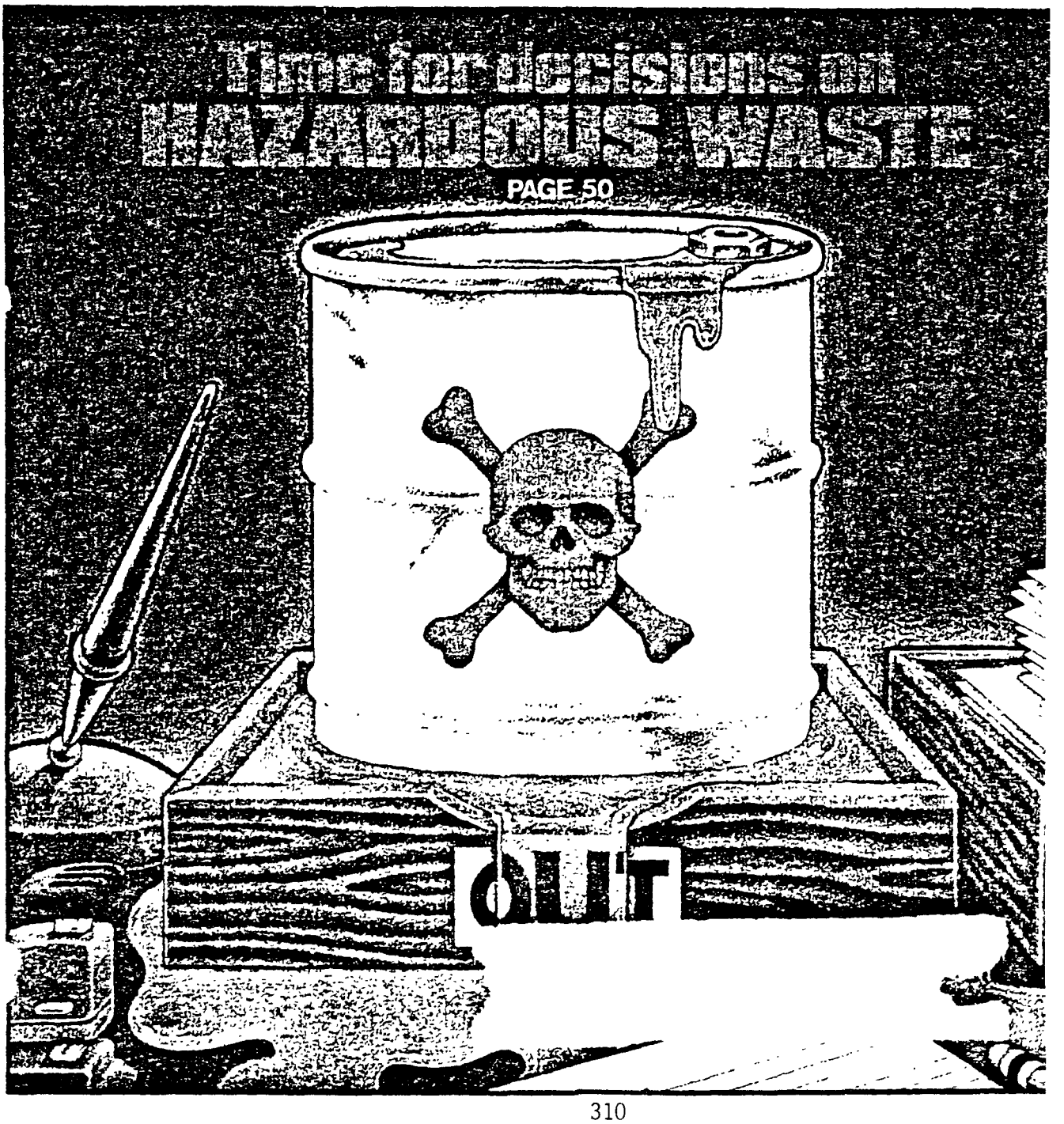

DATA SOURCE C: IRPTC
INTERNATIONAL REGISTER OF POTENTIALLY TOXIC CHEMICALS

Review Date: January, 1981

C.1 BACKGROUND

Development of the International Register of Potentially Toxic Chemicals (IRPTC) was begun in 1977, and is under the auspices of the United Nations Environment Program (UNEP). The project is still in the planning stages.

The IRPTC plan provides for much detail in reporting of physical-chemical properties and effects upon health and the environment.

C.2 STATUS

Currently, IRPTC is coordinating and incorporating data and instructions to develop the system. A total of 17 major categories of data are in the register, and these include information on the chemical, its manufacture, its health effects and its environmental effects. IRPTC is not currently available as a data base, either manually or in computer form, although information on some sixty compounds used to test the proposed data contents and organization are available in published form.

C.3 SCIENTIFIC PARAMETERS

IRPTC has 17 categories of data. Each consists of several scientific parameters. These 17 categories can be roughly divided into nine broad classifications:

- Chemical Identifiers
- Physical-Chemical Properties
- Manufacturing Information
- Environmental Effects
- Health Effects
- Environmental Fate
- Analytical Methods
- Removal
- Legal Implications

Each of these categories is explained in further detail with examples to illustrate the format.

o **Chemical Identifiers**

This section includes the following information:

- Chemical name
- Accession number (IRPTC NU)
- CAS number (CAS NU)
- molecular formula (MOLFM)
- molecular weight (MOLWT)
- structural formula (STRFM)
- Wiswesser Line Notation (WLN)
- definition (DEF)
- synonyms (SYN)

Examples of the chemical fields are given in Figure E.C.1 for the compound Acrylonitrile.

o **Physical-Chemical Properties**

This topic concerns the following information:

- melting point (MP)
- flash point (FP)
- density (DEN)
- boiling point (BP)
- flammable limits (FL)
- relative vapor density (RVDEN)
- vapor pressure (VP)
- adsorption coefficient (ADS)
- partition coefficient (PC)
- water solubility (AQSOL)
- additives (ADD)
- impurities (IMPUR)

Figure E.C.1 shows a typical entry for the chemical Acrylonitrile.

o **Manufacturing Information**

This section deals with the following aspects of chemical production and use.

Production/Consumption covers information relating to:

- geographic area
- quantity
- year
- reference

A typical entry is shown in Figure E.C.2.

Production processes include information pertaining to the:

- process
- impurities
- reference

A typical entry appears in Figure E.C.2.

The Use category includes such information as:

- use
- geographic area
- quantity

Figure E.C.2 shows a typical entry.

o **Environmental Effects**

The environmental effects category incorporates information on a substance's effect upon the environment.

The pathways into the environment are described by information such as:

- pathway and receiving medium
- geographic area
- quantity
- time unit
- reference

A typical entry appears in Figure E.C.3.

Environmental concentration (residue) data include:

- medium
- geographic area
- concentration
- analytical method
- date of sampling
- reference

A typical entry is shown in Figure E.C.3.

o **Health Effects**

The health effects field is very broad in its coverage, and includes a variety of data items:

Bioconcentration is the experimental determination that a higher concentration of a given substance is detected within an organism

than in the surrounding (experimental) environment. The scientific parameters given include:

- test conditions
- water concentration
- organism
- bioconcentration factor and time
- calculation basis
- reference

An example of a typical entry appears in Figure E.C.4.

The clearance time for aquatic organisms refers to the amount of time it takes for an organism to rid (depurate) itself of a substance after being placed in clean water. The information supplied includes:

- test conditions
- organism
- quantity cleared
- reference

An example of a typical entry is given in Figure E.C.4.

The mammalian metabolites section includes the following scientific parameters:

- organism
- metabolites
- reference

A typical entry appears in Figure E.C.5.

The mammalian toxicity array shows the toxic effects associated with a chemical substance in relation to the amount of exposure. The scientific parameters include:

- exposure concentration/dose
- exposure period
- route
- organism
- effect
- reference

A typical entry appears in Figure E.C.5.

Carcinogenicity data include:

- evaluation
- reference

Also entered as part of this category are experimental results including:

- organism
- route
- exposure concentration/dose
- exposure period
- effect
- reference

Figure E.C.6. shows these types of entries.

Mutagenicity data cover the following experimental results:

- organism
- route
- exposure concentration/dose
- exposure period
- test results
- reference

When a mutagenicity entry involves a microorganism or cell culture, the scientific parameters entered include:

- test system or organism
- test results
- reference

Typical entries of both these types are shown in Figures E.C.7.

Neurotoxicity and behavior studies determine if a substance affects nerve tissues or behavior performance. The scientific parameters included are as follows:

- o organism
- o route
- o exposure concentration/dose
- o exposure period
- o effect
- o reference

An example of this type of entry appears in Figure E.C.8.

Potentiation studies determine if a chemical's toxic effects are increased if combined with widely used drugs and other chemicals. The scientific parameters provided include:

- organism
- chemical or drug
- reference

An example appears in Figure E.C.8.

Primary irritation is characterized by the following entries:

- organism
- route
- effect
- reference

Figure E.C.9 shows a typical entry.

Reproduction data are entered as follows:

- organism
- route
- exposure concentration/dose
- exposure period
- effect
- reference

A typical entry is shown in Figure E.C.9.

Sensitization data are entered as follows:

- organism
- route
- effect
- reference

A typical entry appears in Figure E.C.10.

The scientific parameters on teratogenicity appear in the following format:

- organism
- route
- exposure concentration/dose
- exposure data
- effect
- reference

A typical entry appears in Figure E.C.10.

Aquatic and terrestrial toxicity are included to provide information on the environmental toxicity of a substance. Each entry includes the following scientific parameters:

- organism or ecosystem
- exposure concentration/dose

- exposure period
- route of exposure (when applicable)
- effect
- reference

Typical entries for each of these fields appear in Figure E.C.11.

o **Environmental Fate**

The environmental fate field includes a variety of topics.

Biodegradation data are presented in the format:

- source of microorganisms
- test conditions
- analytical technique and quantity
- products and quantity produced
- reference

A typical entry is shown in Figure E.C.12.

The environmental fate data concern the transformation and transport of a chemical in the environment. The scientific parameters entered include:

- interphase or subcompartment
- geographic area
- quantity/time
- reference

A typical entry is shown in Figure E.C.12.

Photodegradation data include the following:

- medium
- test conditions
- quantity of chemical that degrades
- products and quantity produced
- reference

An example of this type of entry appears in Figure E.C.12.

Hydrolysis data include:

- medium and test conditions
- quantity hydrolysed
- products and quantity produced
- reference

A sample entry appears in Figure E.C.13.

Adsorption refers to the process whereby a chemical adheres (absorbs) to a surface solid (biotic and abiotic). The scientific parameters include:

- medium or adsorbent
- test conditions
- test method and quantity
- reference

Figure E.C.13 shows a typical entry line.

Evaporation data include:

- medium
- test conditions
- quantity evaporated
- reference

A sample of this data is given in Figure E.C.13.

Loss describes the event where a decrease in the concentration of chemical cannot be attributed to a single process. The scientific parameters include:

- medium
- test conditions
- quantity lost
- products and quantity produced
- reference

An example appears in Figure E.C.14.

Model ecosystems are set up to experimentally study the various phenomena which occur in natural ecosystems. The scientific parameters included are as follows:

- type of model ecosystem
- reference

Figure E.C.14 shows a typical entry.

o **Analytical Methods**

Sampling/Preparation/Analysis describes the sampling methods, sample preparation, and analytical methods used to test for the environmental presence of various substances. If the report is detailed, the scientific parameters selected include:

- medium
- analytical method
- detection limit
- sample size
- reference

If a less detailed description is given, the data appear in a section called Sampling/Preparation which includes:

- medium
- analytical method
- reference

o **Removal**

This section is very broad and includes:

Spills - entered as a free-text description of secondary documents prepared by expert committees on the handling of spills.

Poisoning treatment - also entered as a free-text description. It is included to inform the user of the symptoms and treatment of various intoxications.

Removal methods - describe the main procedures for substance removal. These methods include recycling, regeneration and ultimate disposal.

o **Legal Implications**

The Legal mechanisms/Recommendations section concerns the control of substances in the environment. The category is very broad and highlights regulations and guidelines from air quality to cosmetic quality. The scientific parameters include:

- geographic area or organization
- type of mechanism
- subject of mechanism
- description of mechanism
- levels with specified analytical method
- effective date
- reference

C.4 ACCESSIBILITY

IRPTC is not yet in published or computerized form. A manual is available containing sample entries of various chemicals.

C.5 DEVELOPMENT PLANS

It is planned that IRPTC will be an on-line data base as well as in published book form. The data base would be continuously updated. IRPTC will also be available on comfiche-computer generated microfiche.

C.6 REFERENCES

1. IRPTC - Instructions for the Selection and Presentation of Data for the International Register of Potentially Toxic Chemicals with Sixty Illustrative Chemical Data Profiles.

KIRK-OTHMER

;cope:

The Kirk-Othmer Encyclopedia of Chemical Technology is a reference text 'hich covers virtually all major aspects of chemical technology and related :opics: industrial products, natural resources, manufacturing processes, and 'hemical uses. The third edition will include topics such as energy, health, afety, toxicology, new materials, polymer and plastics technology, inorganic nd solid-state chemistry, composite materials, fermentation and enzymes, oatings, pharmaceuticals, and surfactant technology.

Second edition volumes were sequentially published from 1963-1972. In the 5 volumes of the third edition, approximately 1,000 articles written by subject xperts will appear. The third edition volumes are being issued at a rate of our per year; completion of the set is expected in 1983.

ccess:

The Kirk-Othmer Encyclopedia of Chemical Technology is published by Wiley-ıterscience, New York (212) 867-9200.

ɔst:

The third edition of the Kirk-Othmer Encyclopedia of Chemical Technology ; available by subscription for $95 per volume.

ımple Search/Output:

Not applicable.

Introduction

The DIALOG Information Retrieval Service, from DIALOG Information Services, Inc., has been serving users since 1972. Now, with more than 120 databases available on the system, the DIALOG Service offers unequaled subject balance and variety. And the DIALOG searching capabilities and strengths make it the most powerful online system of its type.

The databases on the DIALOG system contain in excess of 45,000,000 records. Records, or units of information, can range from a directory-type listing of specific manufacturing plants to a citation with bibliographic information and an abstract referencing a journal, conference pa or other original source.

The following chart groups the DIALOG databases categories representing their primary topic coverage. DIALOG System features are then described, and inf tion on how to begin service is provided. Brief databa descriptions follow, giving a clearer picture of not onl individual databases, but also of the scope of subject matter the DIALOG Service offers. A list of databases file number is found at the end of the Catalog.

File No.	DATABASE (Supplier)	Online Connect Time Rate $/Hour	Offline Pr Rate Per Full Record
	MULTIDISCIPLINARY AND CURRENT AFFAIRS		
102	★ ASI (Congressional Information Service, Inc.)	$90	1
88	★ BIOGRAPHY MASTER INDEX (Gale Research Company)	55	1
137	★ BOOK REVIEW INDEX (Gale Research Company)	55	1
101	CIS (Congressional Information Service, Inc.)	90	2
35	COMPREHENSIVE DISSERTATION INDEX (Univ. Microfilms Inc.)	55	1
77	CONFERENCE PAPERS INDEX (Cambridge Scientific Abstracts)	73	2
135	★ CONGRESSIONAL RECORD ABSTRACTS (Capitol Services, Inc.)	75	1
411	DIALINDEX™ (DIALOG Information Retrievai Service)	35	n
200	DIALOG PUBLICATIONS (DIALOG Information Retrieval Service)	15	n
114	ENCYCLOPEDIA OF ASSOCIATIONS (Gale Research Company)	55	1
20	FEDERAL INDEX (Capitol Services, Inc.)	90	2
136	★ FEDERAL REGISTER ABSTRACTS (Capitol Services, Inc.)	75	2
26	FOUNDATION DIRECTORY (The Foundation Center)	60	3
27	FOUNDATION GRANTS INDEX (The Foundation Center)	60	3
66	GPO MONTHLY CATALOG (U.S. Government Printing Office)	35	1
85	★ GRANTS DATABASE (Oryx Press)	60	3
150	LEGAL RESOURCE INDEX (Information Access Corp.)	90	2
47	MAGAZINE INDEX (Information Access Corp.)	75	2
78	NATIONAL FOUNDATIONS (The Foundation Center)	60	3
111	NATIONAL NEWSPAPER INDEX (Information Access Corporation)	75	2
211	NEWSEARCH (Information Access Corporation)	95	2
911	NEWSEARCH (Information Access Corporation) subscriber	na	n
49	PAIS INTERNATIONAL (Public Affairs Information Service, Inc.)	60	1
65	SSIE CURRENT RESEARCH (Smithsonian Science Info. Exchange)	78	2
	SCIENCE		
110	AGRICOLA 1970–1978 (U.S.D.A. Technical Information Systems)	$30	1
10	AGRICOLA 1979–present (U.S.D.A. Technical Information Systems)	30	1
55	BIOSIS PREVIEWS 1969–1973 (Biosciences Information Service)	49	1
5	BIOSIS PREVIEWS 1974–present (Biosciences Information Service)	49	1
2	CA SEARCH 1967–1971 (American Chemical Society)	70	1

lle o.	DATABASE (Supplier)	Online Connect Time Rate $/Hour	Offline Print Rate Per Full Record
3	CA SEARCH 1972–1976 (American Chemical Society)	$70	18¢
)4	CA SEARCH 1977–1979 (American Chemical Society)	70	18
4	CA SEARCH 1978–present (American Chemical Society)	70	18
31	CHEMNAME™ (Chemical Abstracts Service, DIALOG Information Retrieval Service)	70	20
30	CHEMSEARCH™ (Chemical Abstracts Service, DIALOG Information Retrieval Service)	55	16
30	CHEMSIS™ 1977–present (Chemical Abstracts Service, DIALOG Information Retrieval Service)	70	20
31	CHEMSIS™ 1972–1976 (Chemical Abstracts Service, DIALOG Information Retrieval Service)	70	20
50	CAB ABSTRACTS (Commonwealth Agricultural Bureaux)	35	25
'2	EXCERPTA MEDICA 1980–present (Excerpta Medica)	65	20
'3	EXCERPTA MEDICA IN PROCESS (Excerpta Medica)	65	20
'2	EXCERPTA MEDICA 1974–1979 (Excerpta Medica)	65	20
58	GEOARCHIVE (Geosystems)	70	20
59	GEOREF (American Geological Society)	65	20
2	INSPEC 1969–1977 (Institution of Electrical Engineers)	70	20
3	INSPEC 1978–present (Institution of Electrical Engineers)	70	20
6	IRL LIFE SCIENCES COLLECTION (Information Retrieval Ltd.)	45	15
2	★ MEDLINE 1966–1974 (U.S. National Library of Medicine)	35	15
3	★ MEDLINE 1975–1979 (U.S. National Library of Medicine)	35	15
4	MEDLINE 1980–present (U.S. National Library of Medicine)	35	15
9	METEOROLOGICAL AND GEOASTROPHYSICAL ABSTRACTS (American Meteorological Society and NOAA)	95	15
4	ONTAP™ CA SEARCH (American Chemical Society)	15	na
1	ONTAP™ CHEMNAME (American Chemical Society)	15	na
4	SCISEARCH® 1974–1977 (Institute for Scientific Information) subscriber	40	10
4	SCISEARCH® 1974–1977 (Institute for Scientific Information) nonsubscriber	130	20
4	SCISERACH® 1978–present (Institute for Scientific Information) subscriber	30	10
4	SCISEARCH® 1978–present (Institute for Scientific Information) nonsubscriber	120	25
2	SPIN (American Institute of Physics)	35	10
2	TSCA INITIAL INVENTORY (Environmental Protection Agency, DIALOG Information Retrieval Service)	45	15
	APPLIED SCIENCE & TECHNOLOGY		
5	APTIC (Air Pollution Tech. Info. Ctr. & the Franklin Institute)	$47	20¢
4	AQUATIC SCIENCE & FISHERIES ABSTRACTS (NOAA)	35	15
2	AQUACULTURE (NOAA)	35	15
5	AQUALINE (Water Reserach Centre)	35	30
5	BHRA FLUID ENGINEERING (British Hydromechanics Research Association)	65	15
3	CLAIMS™/CHEM 1950–1970 (IFI/Plenum Data Company)	95	15
3	CLAIMS™/UNITERM 1950–1970 (IFI/Plenum Data Company)	300	15
1	CLAIMS™/UNITERM 1971–1977 (IFI/Plenum Data Company)	300	15
5	CLAIMS™/UNITERM 1978–present (IFI/Plenum Data Company)	300	15
!	CLAIMS™/CITATION (IFI/Plenum Data Company)	95	$50.00
1	CLAIMS™/CLASS (IFI/Plenum Data Company)	95	10
1	CLAIMS™/U.S. PATENTS 1971–1977 (IFI/Plenum Data Company)	95	15

File No.	DATABASE (Supplier)	Online Connect Time Rate $/Hour	Offline Print Rate Per Full Record
25	CLAIMS™/U S. PATENTS ABSTRACTS 1978–present (IFI/Pelnum Data Company)	$95	50
125	CLAIMS™/U.S. PATENT ABSTRACTS WEEKLY (IFI/Plenum Data Company)	95	50
8	COMPENDEX (Engineering Index, Inc.)	68	20
60	CRIS/USDA (USDA)	40	10
103	★ DOE ENERGY (U.S. Dept of Energy)	35	15
69	ENERGYLINE* (Environment Information Center, Inc.)	90	20
40	ENVIROLINE* (Environment Information Center, Inc.)	90	20
68	ENVIRONMENTAL BIBLIOGRAPHY (Internatl Acad. at Santa Barbara)	60	15
51	FOOD SCIENCE AND TECHNOLOGY ABS. (Intl. Food Info. Service)	65	15
79	FOODS ADLIBRA (K&M Publications, Inc.)	55	10
123	INPADOC (International Patent Documentation Center)	95	20
74	INTERNATIONAL PHARMACEUTICAL ABS. (Am. Soc. of Hospital Pharmacists)	50	15
14	ISMEC (Cambridge Scientific Abstracts)	73	20
32	METADEX (American Society for Metals)	80	12
118	★ NONFERROUS METALS ABSTRACTS (British Non-Ferrous Metals Technology Center)	45	20
6	NTIS (National Technical Info. Service, U.S. Dept. of Commerce)	40	10
28	OCEANIC ABSTRACTS (Cambridge Scientific Abstracts)	73	20
48	PIRA (Research Assoc. for Paper & Board, Printing & Packaging Indus.)	55	15
41	POLLUTION ABSTRACTS (Cambridge Scientific Abstracts)	73	20
95	RAPRA ABSTRACTS (Rubber and Plastics Research Association of Great Britain)	65	15
117	★ SELECTED WATER RESOURCES ABSTRACTS (U.S. Dept. of the Interior)	45	15
115	SURFACE COATINGS ABSTRACTS (Paint Research Association of Great Britain)	65	15
63	TRIS (U.S. Department of Transportation and Transportation Research Board)	40	10
99	WELDASEARCH (The Welding Institute)	65	15
33	WORLD ALUMINUM ABSTRACTS (American Society for Metals)	50	10
67	WORLD TEXTILES (Shirley Institute)	55	10
	SOCIAL SCIENCES & HUMANITIES		
9	AIM/ARM (Center for Vocational Education)	$25	1
38	AMERICA: HISTORY & LIFE (ABC-Clio, Inc.)	65	1
56	ARTBIBLIOGRAPHIES MODERN (ABC-Clio, Inc.)	60	1
64	CHILD ABUSE AND NEGLECT (Natl. Cntr. for Child Abuse and Neglect)	35	1
1	ERIC (Educational Resources Information Center)	25	1
54	EXCEPTIONAL CHILD ED RESOURCES (Council for Except. Children)	25	1
39	HISTORICAL ABSTRACTS (ABC-Clio, Inc.)	65	1
36	LANGUAGE & LANGUAGE BEHAVIOR ABS. (Sociol. Abs., Inc.)	55	1
61	LISA (Learned Information Ltd.)	50	1
71	MLA BIBLIOGRAPHY (Modern Language Association)	55	1
21	NCJRS (National Criminal Justice Reference Service)	35	1
46	NICEM (National Information Center for Educational Media)	70	2
70	NICSEM/NIMIS (National Info. Cntr. for Special Education Materials)	35	1
86	★ MENTAL HEALTH ABSTRACTS (National Clearinghouse for Mental Health Information, National Institute of Mental Health)	30	1
201	ONTAP™ ERIC	15	n

le o.	DATABASE (Supplier)	Online Connect Time Rate $/Hour	Offline Print Rate Per Full Record
57	PHILOSOPHER'S INDEX (Philosophy Documentation Center)	$55	15¢
1	POPULATION BIBLIOGRAPHY (University of North Carolina, Carolina Population Center)	55	10
1	PSYCINFO (American Psychological Assoc.)	65	10
7	RILM ABSTRACTS (City University of New York, International RILM Center)	65	15
7	SOCIAL SCISEARCH® (Institute for Scientific Information)	70	10
7	SOCIOLOGICAL ABSTRACTS (Sociological Abstracts, Inc.)	55	15
7	SPECIAL EDUCATION MATERIALS (NICSEM)	65	15
3	U.S. POLITICAL SCIENCE DOCUMENTS (Univ. of Pittsburgh, Cntr. for International Studies)	65	15
0	U.S. PUBLIC SCHOOL DIRECTORY (National Center for Educational Statistics)	35	10
	BUSINESS/ECONOMICS		
5	ABI/INFORM (Data Courier, Inc.)	$73	30¢
3	★ ADSEARCH (Corporate Intelligence, Inc.)	95	25
9	CHEMICAL INDUSTRY NOTES (American Chemical Society)	75	20
0	DISCLOSURE (Disclosure Incorporated)	60	$5.00
0	ECONOMICS ABSTRACTS INTERNATIONAL (Learned Information Ltd.)	65	20
2	EIS INDUSTRIAL PLANTS (Economic Information Sytems, Inc.)	90	50
2	EIS NONMANUFACTURING ESTABLISHMENTS (Economic Information Systems, Inc.)	90	50
5	FOREIGN TRADERS INDEX (U.S. Department of Commerce)	45	25
3	FROST & SULLIVAN DM² (Frost & Sullivan)	90	20
0	LABOR STATISTICS (LABSTAT) (Bureau of Labor Statistics, U.S. Dept. of Labor)	45	15
5	MANAGEMENT CONTENTS® (Management Contents, Inc.)	70	15
2	PHARMACEUTICAL NEWS INDEX (Data Courier, Inc.)	90	20
3	PTS F&S INDEXES 1972–1975 (Predicasts, Inc.)*	90	20
3	PTS F&S INDEXES 1976–present (Predicasts, Inc.)*	90	20
4	PTS INTERNATIONAL TIME SERIES (Predicasts, Inc.)*	90	20
3	PTS INTERNATIONAL FORECASTS (Predicasts, Inc.)*	90	20
7	PTS PREDALERT (Predicasts, Inc.)*	90	20
5	PTS PROMT (Predicasts, Inc.)*	90	20
1	PTS U.S. FORECASTS (Predicasts, Inc.)*	90	20
2	PTS U.S. TIME SERIES (Predicasts, Inc.)*	90	20
2	STANDARD & POOR'S NEWS (Standard & Poor's Corp.)	85	15
5	TRADE OPPORTUNITIES (U.S. Department of Commerce)	45	25
7	TRADE OPPORTUNITIES WEEKLY (U.S. Department of Commerce)	45	50
5	U.S. EXPORTS 1978–present (U.S. Department of Commerce)	45	25

a three-month trial period the rate per record TYPEd or PRINTed will increase to 50¢ unless subscription arrangement is through Predicasts, Inc., 200 University Circle Research Center, 11001 Cedar Ave., Cleveland, OH 44106 (216/795-3000)
ıcoming database

D6303000107

Multimedia Assessment of the Inorganic Chemicals Industry

Acronym: None
Media sampled to generate data: Effluents manufacturing processes and waste treatment
Emissions manufacturing processes and waste treatment
Solid waste
Type of data collection/monitoring: Point source data collection inorganic chemical manufacturing processes
Data base status: Update terminated

ABSTRACT: Information on high volume, industrial inorganic chemicals which are compounds of aluminum, boron, chromium, fluorine, iron, manganese, nickel, phosphorus, seawater, silicon, methane, alkalie, sodium, sesquicarbonate, sulfur titanium, barium, calcium, copper, lead, strontium, potassium, lithium, magnesiu arsenic, antimony, cadmium, cobalt, mercury, vanadium, and four industrial gases Process description, energy requirements, raw waste description, pollution technology, and emissions after controls are also included. Occupational and he effects and research and development needs in pollution control are presented fo each group of chemicals.

Non-pollutant parameters include:
- Chemical data
- Compliance data
- Concentration measures
- Cost/economic data
- Discharge points
- Disposal
- Exposure data
- Flow rates
- Geographic subdivision
- Health effects
- Industry
- Location
- Manufacturer
- Political subdivisions
- Production levels
- Treatment devices
- Use
- Volume/mass measures
- Process description
- Control technology
- Residual emissions after treatment
- disposal practices

Ongoing study time period is 01/01/75 to 08/30/80
Termination of data collection: Occurred 08/30/80

Frequency of data collection: 5 year period for data collection and update

ry plant used in the U.S. to manufacture inorganic chemicals.

a base includes: Summary or aggregate observations
Reference data/citations

ry facility manufacturing inorganic chemicals on an industrial scale

graphic coverage of data base: National
ation identifiers of station/source for each record are: State
City
Town/township

ility identifiers include: Plant location
Parent corporation name
lutant identification data are: Uncoded

itations: Limitation of data base is that representative manufacturers were
tacted and engineering estimates were made for others.

audit: Data not based on lab analysis.
cision and accuracy estimates are not available
known edit procedures exist.

a collected by: Contractor - Versar, Inc. Springfield, VA
a analyzed by: EPA lab - Industrial Environmental Research Lab-Cinci
Contractor - Versar, Inc. Springfield, VA
a base identifies specific laboratory performing analysis.

icipatory/research is the primary purpose for data collection.
nology development is the secondary purpose for data collection.
nd assessment is the third purpose for data collection.
statutory requirement: Data collection requirement is to develop long term
earch and development program for inorganic chemical industry
n of available reports and outputs: Unpublished reports Multimedia Assessment
of Inorganic Chemicals Industry.
Printouts on request possible in a year
rent regular users of data base: 5
rs: EPA headquarter offices - Effluent Guidelines Division
EPA regional offices
Federal agencies Occupational Safety and Health Administration
fidentiality: No limits on access to data
nary physical location of data: EPA lab
n of data storage: Magnetic tape
n access: Commercial software SYSTEM 2000
EPA hardware Univac 1100

tact - Subject matter: Mary Stinson (201) 340-6683
tact - Computer-related: Mary Stinson (201) 340-6683
tact - responsible EPA Office: Industrial Environmental Research Lab-Cincin (513)
-4481

rge for non-EPA use: Not Known at this time
quency of master file up-date: Annual update may be done

D7205000002

National Electronic Injury Surveillance System

Acronym: NEISS
Media sampled to generate data: sample is hospital emergency rooms which treat pesticide poisonings.
Type of data collection/monitoring: monitoring of injuries (pesticide poisoı treated in hospital emergency rooms.
Data base status: Operational/ongoing

ABSTRACT: NEISS consists of a listing of pesticide poisoning incidents giving information on type of pesticide, route of exposure, whether or not the case wı diagnosed as a poisoning by a physician, what symptoms, if any, were present, brand name of the pesticide, and the EPA registration number of the product, i. known.

Non-pollutant parameters include:
- Exposure data
- Health effects
- Location
- Population demographics
- Sampling date
- Treatment devices
- pesticide type
- route of exposure
- physician diagnosis of poisoning
- symptoms present
- age & sex of patient
- disposition of case
- body part affected
- EPA regulation number

Ongoing study time period is 01/01/79 to 09/30/80 (present)
Termination of data collection: Not anticipated

Frequency of data collection: Monthly reports by Consumer Product Safety Commission to EPA

Total estimated number of observations is 21067.
Estimated annual increase of observations is 18500.

Data base includes: Raw data/observations
Summary or aggregate observations

Total number of stations or sources covered is 74.
Number currently contributing data is 51.
Number of facilities covered is 74.

Geographic coverage of data base: National
Location identifiers of station/source for each record are: County

State (available to
Health Effects Branch
only)

ility identifiers include: hospital identification number assigned by Consumer Product Safety Commission

lutant identification data are: Coded with other coding schemes

itations: Data base contains only those pesticides and RPAR chemicals that are no ger being sold but that may still exist in homes throughout the country.

a collection and analysis procedures: Sampling plan documented
Analysis method documented
analysis not based on EPA-approved or accepted methods.
audit: Data not based on lab analysis.
cision and accuracy estimates exist but are not included in data base
t procedures used but undocumented.

a collected by: hospital personnel
a analyzed by: Other federal agency - U.S. Consumer Product Safety Commission (CPSC)
a base does not identify specific laboratory performing analysis.

elopment of regulations or standards is the primary purpose for data collection.
nd assessment is the secondary purpose for data collection.
cial study is the third purpose for data collection.
statutory requirement: Data collection requirement is to support Agency research o health effects of pesticides.
m of available reports and outputs: Unpublished reports Report of First Year Data-Interagency Agreement with the Consumer Product Safety Commission
rent regular users of data base: 5
rs: EPA headquarter offices - Health Effects Branch, Office of Pesticide Programs
EPA laboratories Pesticide Incident Monitoring System (PIMS) Data Center, Miami FL.
fidentiality: Limits on access within EPA and outside agency for some
a
mary physical location of data: Other federal agency
m of data storage: Magnetic disc
a access: through the Health Effects Contact with the Consumer Product Safety Commission

tact - Subject matter: Mary Frankenberry (202)472-9310
tact - Computer-related: Eileen Kessler, CPSC
tact - responsible EPA Office: Mary Frankenberry (202)472-9310

rge for non-EPA use: No outside use/access permitted
quency of master file up-date: Semi-annually
report annually

ated non-EPA data bases: reports from Poison Control Centers

D2209000905

National Institutes of Health/Environmental Protection Agency (NIH/EPA) Chemical Information System

Acronym: CIS

Media sampled to generate data: Air
Atmospheric deposition
Blood
Drinking water
Effluents various
Emissions various
Ground water
Mobile source emissions
Noise
Runoff various
Sediment
Soil
Solid waste
Surface water various
Tissue various

Type of data collection/monitoring: ambient, point and non-point sources

Data base status: Operational/ongoing

ABSTRACT: The NIH/EPA Chemical Information System (CIS) is a collection of scientific data bases available through an interactive computer program. No o publicly available information system can provide such diverse numeric, as opp to bibliographic, data on so many (over 192,000) chemical substances. CIS has unique linking system, the heart of which is the Structure and Nomenclature Se System (SANSS). SANSS allows the user, in a single operation, to search 66 different files including the TSCA inventory. CIS includes 6 major identifica data bases (OHM-TADS; Mass Spectometry; Carbon 13 NMR; Organic Crystals: Singl Crystals and Powder Defraction). Additional data bases cover toxicology, the Federal Register, and bibliographic files.

Non-pollutant parameters include: Biological data
Chemical data
Collection method
Compliance data
Concentration measures
Cost/economic data
Discharge points
Disposal
Geographic subdivision
Health effects
Industry
Inspection data
Location
Manufacturer
Physical data
Sampling date
Site description
Temperature

Use
Volume/mass measures

g study time period is 01/01/30 to 09/30/80 (present)
ation of data collection: Not anticipated

ncy of data collection: one time only
daily
weekly
quarterly
semi annually
annually
as needed

actual number of observations is 192000 chemicals.
ted annual increase of observations is 25000-50000.

ase includes: Raw data/observations
Summary or aggregate observations

number of stations or sources covered is 1000.
currently contributing data is 66.

phic coverage of data base: International
on identifiers of station/source for each record are: State
County
City
Town/township
Street address
Coordinates
latitude/longitude in
Waterdrop data base
Project identifier
lab identifier

ty identifiers include: Plant facility name
Plant location
Parent corporation name
Parent corporation location
Street address
SIC code
ant identification data have: CAS registry number codes

tions: Quality assurance procedures vary by data base and source. Frequency
a collection varies for each data base and source.

ollection and analysis procedures: Sampling plan documented
Collection method documented
Analysis method documented
QA procedures documented
alysis not based on EPA-approved or accepted methods.
dit: Data not based on lab analysis.
ion and accuracy estimates partially exist for organic crystals and

mass spectometry data
Edit generally performed by contractor, some documented, and some not.

Data collected by: Local agency - Texas, California and other Air Resources Bc
State agency - Environmental Protection Agencies
Regional office - Surveillance and Analysis Divisions (most regions)
EPA lab - Environmental Monitoring and Support Lab-Cincinna OH
EPA lab - Environmental Research Lab-Athens, GA
EPA lab - Environmental Research Lab-Ada, OK
EPA lab - National Enforcement Investigations Center
Contractor lab - under contract to National Bureau of Stanc & Radian Lab under contract to EPA.
Contractor - Betel, RTI and misc. others
Other federal agency - National Institutes of Health Feder: Drug Administration National Bureau of Standards
EPA headquarters - Chemical Information System coordinator
Universities, Data Center (England), Hungarian Academy of Sciences & others

Data analyzed by: Contractor - Fein Marquart & Radian Corporation
international data generators

Data base identifies specific laboratory performing analysis.

Development of regulations or standards is the secondary purpose for data collection.
Compliance or enforcement is the secondary purpose for data collection.
Trend assessment is the secondary purpose for data collection.
Technology development is the secondary purpose for data collection.
Risk assessment is the secondary purpose for data collection.
Anticipatory/research is the secondary purpose for data collection.
Program evaluation is the secondary purpose for data collection.
development of single resource to link chemical files and literature. Purpose use varies by user. is the primary purpose for data collection.
No statutory requirement: Data collection requirement is to develop a support resource to coordinate and link all EPA chemical files with the literature & external files.

Form of available reports and outputs: Publications articles in On-Line; Sci Industrial Chemical News; Journal of Chemical Information and Computer Svs mass spectra data (4 volumes and inde

Current regular users of data base: 1000

Users: EPA headquarter offices - Office of Planning and Evaluation
EPA headquarter offices - Office of Toxic Substances
EPA headquarter offices - Office of Enforcement
EPA headquarter offices - Office of Waste Water Management
EPA headquarter offices - Office of Solid Waste
EPA headquarter offices - Office of Research and Development
EPA headquarter offices - Office of Air, Noise and Radiation
EPA regional offices
EPA laboratories
Other federal agencies

States
industry, universities and 20 countries
dentiality: No limits on access to data
ry physical location of data: Contractor
of data storage: Magnetic tape
Magnetic disc
access: EPA software NIH/EPA-CIS MIDSD system number: 7500000900
EPA hardware DEC PDP-10 (NIH)

ct - Subject matter: Stephen R. Heller (202)755-4938
ct - Computer-related: Stephen R. Heller (202)755-4938
ct - responsible EPA Office: Stephen R. Heller (202)755-4938

e for non-EPA use: yes
ency of master file up-date: varies from weekly to annually by data base

ed EPA data bases: OHM-TADS, STORET
ed non-EPA data bases: Lockheed bibliographic data bases, National Library of
ine data bases, System Development Corporation data bases.

n completing form: Stephen R. Heller
e: EPA/(OPM)/(OMAS)/(MIDSD)
ss: 401 M St, S.W. Washington, DC 20460
: (202)755-4938

tants included in data base:
ldehyde 75-07-0
ein 107-02-8
onitrile 107-13-1
chloride 107-05-1
chloride 100-44-7
ilorometh1)ether 542-88-1
n tetrachloride 56-23-5
obenzene 108-90-7
oform 67-66-3
oprene 126-99-8
oromethane 75-09-2
rylnitrosamine 62-75-9
ne 123-91-1
n 828-00-2
orohydrin 106-89-8
ne dibromide (edb) 106-93-4
ne dichloride 107-06-2
ne oxide 75-21-8
dehyde 50-00-0
ilorocyclopentadiene 77-47-4
ol 108-39-4
ne 108-38-3
anhydride 108-31-6
ese 7439-96-5
chloroform 71-55-6

Table 5. Profile of data collection systems that measure environmental pollutants or individual exposures—Con.

(Agency designations by acronym are listed in figure 1)

Name of program or system	Agency	Purpose	Topical focus of data		Method of data collection	Population-location-time coverage	Method of data dissem-ination	Statistics generated
			Health	Environment or individual exposure				
National Occupational Hazard Survey	NIOSH	To provide estimates of the number of workers exposed to various industrial compounds.		Occupation. Standard Industrial Classifications. Trade name product, and chemical ingredient.	Exposure survey. Probability sample of industrial sites within 60 industries. Plants are stratified by size within an industry. Plants are randomly sampled within strata and all plant employees interviewed.	4,636 plants throughout the United States were surveyed between 1972 and 1974. A second survey is underway.	Tape. Publication.	Estimates of number of workers exposed to specific chemicals by industrial code.

ONAL
ATIONAL
ARD

SURVEY
SURVEY
SURVEY
SURVEY
SURVEY

JME 1

SURVEY MANUAL

NIOSH
NIOSH
NIOSH
NIOSH

DEPARTMENT OF
HEALTH, EDUCATION, AND WELFARE
PUBLIC HEALTH SERVICE
CENTER FOR DISEASE CONTROL
NATIONAL INSTITUTE FOR OCCUPATIONAL SAFETY AND HEALTH

NATIONAL OCCUPATIONAL HAZARD SURVEY

SURVEY
SURVEY
SURVEY
SURVEY
SURVEY

Volume II

Data Editing and Data Base Development

NIOSH
NIOSH
NIOSH
NIOSH

U. S. DEPARTMENT OF HEALTH, EDUCATION, AND
Public Health Service
Center for Disease Control
National Institute for Occupational Safety and

TIONAL

PATIONAL

AZARD

SURVEY
SURVEY
SURVEY
SURVEY
SURVEY

ume III

Survey Analysis and Supplemental Tables

NIOSH
NIOSH
NIOSH
NIOSH

U. S. DEPARTMENT OF HEALTH, EDUCATION, AND WELFARE
Public Health Service
Center for Disease Control
National Institute for Occupational Safety and Health

Table 2. Profile of data collection systems that document medical care need or use—Con.

(Agency designations by acronym are listed in figure 1)

Name of program or system	Agency	Purpose	Topical focus of data		Method of data collection	Population-location-time coverage	Method of data dissemination	Statistics generated
			Health	Environment or individual exposure				
Occupational Hazard Exposure Registry	NIOSH	To provide surveillance of workers exposed to workplace hazards, e.g., kepone.	Presence of expected health effects.	Type of industry and work history indicating potential and actual exposure.	Registry. Continuing search for high-risk groups.	Nationwide effort started in 1976.	None.	Cause specific mortality.

Table 1. Profile of data collection systems that measure population health status—Con.

(Agency designations by acronym are listed in figure 1)

Name of program or system	Agency	Purpose	Topical focus of data		Method of data collection	Population-location-time coverage	Method of data dissem-ination	Statistics generated
			Health	Environment or individual exposure				
Occupationally Related Disease Case Registers	NIOSH	To provide data on the changing incidence and prevalence of occupationally re-lated disease.	Vital and general health status. Occur-rence of hepatic angio-sarcoma; occurrence of beryllium related disease.	Record of PVC ex-posure by job history Record of beryllium exposure by job history	National case finding efforts. Submission of case reports from medical community. Related to Hepatic Angiosarcoma Case Finding Effort (table	80 cases of angio-sarcoma reported for 1974-80. 880 cases of berylliosis reported between 1951 and 1980.	Publications in preparation.	Changes in incidence and prevalence over the years.

D6303000106

Organic Chemical Producers Data Base

Acronym: OCPDB
Media sampled to generate data: No specific media This data base lists organic chemicals, their properties, producers, and describes processes by which they are produced.
Type of data collection/monitoring: literature and personal contacts
Data base status: Operational/ongoing

ABSTRACT: The data base includes almost 600 chemicals and their more than 1,300 producers. Chemicals are described by Chemical Abstracts Services (CAS) registr number, Wiswesser Line Notation (WLN), chemical uses, synonyms, toxicity data, economic data, and producers. Locations of producers are described by city, sta EPA region, and river basin. The chemicals that are produced at each location a listed, along with nameplate capacities and emissions when available.

Non-pollutant parameters include:
- Chemical data
- Cost/economic data
- Discharge points
- Geographic subdivision
- Industry
- Location
- Manufacturer
- Political subdivisions
- Production levels
- Use
- toxicity data
- process descriptions

Ongoing study time period is 02/01/76 to 02/30/79
Termination of data collection: Not anticipated

Frequency of data collection: as needed

Total estimated number of observations is 2492.

Data base includes:
- Raw data/observations
- Summary or aggregate observations
- Reference data/citations

Total number of stations or sources covered is 1246.
Number currently contributing data is 1246.
Number of facilities covered is 1246.

Geographic coverage of data base: National
Location identifiers of station/source for each record are:
- State
- City
- Town/township

Facility identifiers include:
- Plant facility name
- Plant location

Parent corporation name
Parent corporation location
Program identifier
ant identification data have: CAS registry number codes

tions: The data base includes high volume, organic chemical products are
ed, exclusively. Quality assurance aspects are not applicable.

ollection and analysis procedures: Collection method documented
Analysis method documented
QA procedures documented
dit: Data not based on lab analysis.
rocedures used but undocumented.

ollected by: Contractor lab - Monsanto, Radian
nalyzed by: Contractor - Radian
ase does not identify specific laboratory performing analysis.

pment of regulations or standards is the primary purpose for data collection.
assessment is the secondary purpose for data collection.
tutory requirement: Data collection requirement is To compile a list of
ers of major chemicals in order to facilitate EPA sampling programs and
ories.
f available reports and outputs: Publications
Unpublished reports
Printouts on request
Machine-readable raw data
t regular users of data base: 50
EPA headquarter offices - Office of Toxic Substances
EPA headquarter offices - Office of Solid Waste
EPA headquarter offices - Office of Air Quality Planning and Standards
EPA regional offices
EPA laboratories
Other federal agencies
States
local government agencies

entiality: No limits on access to data
y physical location of data: NCC/UNIVAC
f data storage: Magnetic tape
ccess: Commercial software System 2000

t - Subject matter: A. McBath (513) 684-4417
t - Computer-related: A. McBath (513) 684-4417
t - responsible EPA Office: E.E. Berkau (513) 684-4314

for non-EPA use: no
acy of master file up-date: as needed

pertinent data bases: Several are proposed by this office — some of which
be operational by 1982.

Table 3. Profile of data collection systems that test specific interrelationships—Con.

(Agency designations by acronym are listed in figure 1)

Name of program or system	Agency	Purpose	Topical focus of data		Method of data collection	Population-location-time coverage	Method of data dissemination	Statistics generated
			Health	Environment or individual exposure				
					persons.			
Outcome Studies of Workers in Selected Industries or Occupations	NIOSH	To understand relationship between type of industry or specific exposures and causes of death.	Cause of death.	Occupation, industry, chemical or physical agent.	Cohort studies. Plants with high-risk characteristics are selected. All workers in a defined cohort are selected for study.	Series of industrywide studies, beginning in 1971.	Special reports.	Risk statistics. Mortality rates. Average exposure to selected pollutants.

Pesticides Analysis Retrieval and Control System (PARCS) EISD #10083

- **Purpose:**

The Office of Pesticide Programs (OPP) is responsible for registration of all pesticides used in the nation. PARCS provides a centralized source of information on all of these registered pesticides. Data in the system are used for registration analysis, research, and reporting.

- **Annual Cost:**

Computer	*Personnel*	*Contract Support*
$500,000	$317,000	$75,000

- **Primary Users:**

The system is used chiefly to support the pesticides registration program. Research on chemicals used in pesticides is also a major source for retrieval requests.

- **Description:**

Currently, information on 36,000 pesticides handled in interstate commerce is contained in the PARCS system. Data in this system is highly encoded; for ease and manipulation, and all new data requests are controlled by one central office.

The PARCS system is used to retrieve information about pesticides on a variety of categories. For example, the system can answer questions such as "list all disinfectants and fungicides containing malathion." The system maintains information on the name and address of producer, ingredients (both active and inert), and the usage category of all pesticides. Retrieval software allows the data to be extracted, analyzed, and formatted. Accident investigation information is also maintained as a separate part of the system.

- **Operation:**

PARCS runs on the OSI computer. The data files are stored on-line, but access to them is limited to retrieval requests submitted to OPP. Retrievals are currently being run about 500 times per year, which is up sharply from previous years. The workload to maintain the data has increased 30-40% this year due to new legislation requiring that intra-state as well as inter-state pesticides be registered.

Input for changes to the data is done using WYLBUR data sets. This input accounts for 40% of the annual costs. Retrievals are run in batch mode. Accident information is maintained in a separate file. Data entered by the Regions is edited and stored on disk. Requests for information on accidents average one per week. Standard summary reports are produced monthly.

- **Responsibility.**

System Sponsor: Elgin Fry

D7202000005

Pesticide Document Management System

Acronym: PDMS
Media sampled to generate data: Air
Drinking water
Effluents varies by producer
Ground water
Runoff rain water, ground water, waste water
Sediment
Soil
Surface water
Tissue animals, plants, man
Type of data collection/monitoring: scientific data varies as submitted by producers
Data base status: Operational/ongoing

ABSTRACT: The Federal Insecticide, Fungicide, and Rodenticide Act requires eve: pesticide manufacturer or producer to submit scientific data to EPA before a pesticide product can be manufactured, sold, or used in the United States. Th data are maintained in the Pesticide Document Management System. Related information from the published literature is also included.

Non-pollutant parameters include: Biological data
Chemical data
Cost/economic data
Disposal
Exposure data
Health effects
Manufacturer
Physical data
Production levels
Site description
Test/analysis method
Use

Ongoing study time period is 01/01/80 to 10/30/80 (present)
Termination of data collection: Not anticipated

Frequency of data collection: daily

Total estimated number of observations is 65000 citations.
Estimated annual increase of observations is 48000.

Data base includes: Raw data/observations
Summary or aggregate observations
Reference data/citations

Total number of stations or sources covered is 44941 companies.
Number currently contributing data is unknown.

of facilities covered is not available.

›hic coverage of data base: National
›n identifiers of station/source for each record are: citations
:y identifiers include: Not applicable
ınt identification data have: Shaughnessy Codes

:ions: The data base is still being developed. Currently, it has limited
·batch mode by a chemical code, Shaughnessy Code; a limited number of standard
'als and output formats; a response time of 3-4 days; and one purpose-
.tion support to the EPA Pesticides Program. Information Requests which fall
: of these limits will require new programs and increase the response time.
:ains information for 72 chemicals.

llection and analysis procedures: Sampling plan documented
Collection method documented
Analysis method documented
QA procedures documented
lysis not based on EPA-approved or accepted methods.
on and accuracy estimates are not available.
ograms for validity of bibliographic information only; no
or accuracy.

llected by: Self reporting pesticide producers and manufacturers
EPA headquarters - Office of Pesticide Programs
alyzed by: Self reporting primary data analysis
EPA headquarters - Office of Pesticide Programs
se identifies specific laboratory performing analysis.

ment of regulations or standards is the primary purpose for data collection.
nce or enforcement is the secondary purpose for data collection.
sessment is the third purpose for data collection.
ry authorization is P L 92-516 as amended, section 3(c)(2)(c) (FIFRA)
available reports and outputs: Printouts on request
Microfilm
regular users of data base: 350 people (OPP review Scientists and contract reviewers)
EPA headquarter offices - Office of Pesticide Programs
ıtiality: Limits on access within EPA and outside agency for some

physical location of data: Headquarters office
data storage: Magnetic disc
Microfich/film
:ess: Commercial software WYLBUR
EPA hardware IBM 370/168 MIDSD system number: 7200000905

- Subject matter: William C. Grosse (202) 426-2680
- Computer-related: Elgin G. Fry (202) 426-8862
- responsible EPA Office: William C. Grosse (202) 426-2680

for non-EPA use: no outside use/access permitted
:y of master file up-date: Weekly

D7205000003

Pesticide Incident Monitoring System

Acronym: PIMS
Media sampled to generate data: Air
Blood
Drinking water
Ground water
Runoff agricultural
Sediment
Soil
Tissue human, animal, fish
Type of data collection/monitoring: data collection or monitoring is often determined by the nature of the incident.
Data base status: Operational/ongoing

ABSTRACT: The Pesticide Monitoring System (PIMS) enters, stores, coordinates ar retrieves pesticide incident data within the EPA. The system develops and mair reporting sources, monitors suspected incidents and provides confirmatory analy and data on circumstances of the incident.

Non-pollutant parameters include: Biological data
Chemical data
Collection method
Concentration measures
Disposal
Exposure data
Geographic subdivision
Health effects
Industry
Location
Manufacturer
Physical data
Precipitation
Sampling date
Site description
Use
Wind direction
Wind velocity
Some application methods
Rates

Ongoing study time period is 01/01/66 to 09/30/80 (present)
Termination of data collection: Not anticipated

Frequency of data collection: varies as incidents are reported-may be as frequently as daily.

Total actual number of observations is 41000.
Estimated annual increase of observations is 4000.

base includes: Raw data/observations
Summary or aggregate observations

l number of stations or sources covered is 100 or more.
er currently contributing data is 50 major contributors.

raphic coverage of data base: National
tion identifiers of station/source for each record are: State
County
City
Project identifier
Agency or reporting source
ıtant identification data are: Coded with other coding schemes

:ations: Pesticides with most reported incidents are those with high
:ultural and home use rates. No incidents have been reported for some of the
.cides. PIMS is a voluntary system--as such, numbers of reports vary as does
quality (e.g. confirmed as to pesticide cause.)

ınalysis based on EPA-approved or accepted methods.
ıudit: Data not based on lab analysis.
.sion and accuracy estimates exist but are not included in data base
automated data processing system undergoing edit..

collected by: Self reporting
Local agency
State agency3 state health departments are among the 12 field offices collecting 90% of the reports.
Regional office
EPA lab
Contractor lab
Contractor9 universities are among the 12 field offices - collecting 90% of the reports.
Other federal agency
EPA headquarters
analyzed by: Local agency
State agency
Regional office
EPA lab
Contractor lab
Contractorcooperative agreement with the University of Miami, School of Medicine-operates PIMS
Other federal agency
EPA headquarters
ɔase identifies specific laboratory performing analysis.

assessment is the primary purpose for data collection.
ıssessment is the primary purpose for data collection.
ɔpment of regulations or standards is the primary purpose for data collection.
ıl study is the primary purpose for data collection.
ıance or enforcement is the secondary purpose for data collection.

Anticipatory/research is the secondary purpose for data collection.
Program evaluation is the secondary purpose for data collection.
Statutory authorization is P L 92-516 as amended, Section 3 (The Federal Insecticide, Fungicide, and Rodenticide Act-FIFRA)
OMB form number: 158-R-0008
Form of available reports and outputs: Publications summary reports
Unpublished reports
Printouts on request
Current regular users of data base: 50
Users: EPA headquarter offices - Office of Pesticide Programs, Office of Gener
Counsel, Office of Pesticides and Toxic Substances, Office of Enforceme
EPA regional offices
Other federal agencies
States
General Accounting Office
Public Interest Groups various ones
Confidentiality: Limits on outside access for all data
Primary physical location of data: Contractor
Form of data storage: Magnetic disc
Original form (hardcopy, readings)
Data access: University of Miami, IBM Series I

Contact - Subject matter: James J. Boland (202)472-9310
Contact - Computer-related: Dr. Robert Duncan (305)547-6475
Contact - responsible EPA Office: Hazard Evaluation Division, Office of Pesti
Programs (202)472-9310

Charge for non-EPA use: No
Frequency of master file up-date: daily

Person completing form: James J. Boland
Office: EPA/(OPTS)/(OPP)/(HED)
Address: Marfair Bldg., Washington, DC
Phone: (202)472-9310

Pollutants included in data base:
acrolein 107-02-8
acrylonitrile 107-13-1
carbon tetrachloride 56-23-5
chloroform 67-66-3
dichloromethane 75-09-2
ethylene dibromide (edb) 106-93-4
ethylene oxide 75-21-8
formaldehyde 50-00-0
m-cresol 108-39-4
methyl chloroform 71-55-6
o-cresol 95-48-7
p-cresol 106-44-5
p-dichlorobenzene 106-46-7
perchloroethylene 127-18-4
phosgene 75-44-5
proplyene oxide 75-56-9

.ume 1, Number 1

March 1981

RIANDF 1(1) 1–96 (1981)
ISSN 0272-4332

Risk Analysis

AN INTERNATIONAL JOURNAL

n Official Publication of the Society for Risk Analysis

Plenum Press • New York and London

Table 2. Profile of data collection systems that document medical care need or use

(Agecny designations by acronym are listed in figure 1)

Name of program or system	Agency	Purpose	Topical focus of data		Method of data collection	Population-location-time coverage	Method of data dissemination	Statistics generated
			Health	Environment or individual exposure				
BLS Statistical Record-keeping System	BLS	To provide registration of occupational illness and injury at the employer level.	Fatalities. Disease and injury by cause.	Industry	Registry. Log and summary of occupational injury and illness are maintained. Supplementary record on each case.	Since 1971, logs have been maintained by all nonfarm employers of more than 10 people nationwide.	Publication.	Incidence of injury and illness by cause per 100 workers.

ORBIT®

A World of Information

COMPREHENSIVE	Subjects range from the most technical aerospace topics to humor from the floor of the U S Congress
TIMELY	Over 45,000 new items are added to the files each week, through our fast, automatic update system.
CONVENIENT	You can access ORBIT in your own facility through a local phone number in many locations
EASY TO USE	Interactions with ORBIT are in English, making it easy to learn and easy to use
FLEXIBLE	ORBIT lets you choose the entry mode that is most appropriate for your search problem
COST-EFFECTIVE	You pay for usage only—no subscription charge or minimum fees
WELL-SUPPORTED	Technical staff members are available to answer your questions

SDC Search Service

a division of System Development Corporation

:500 Colorado Avenue
ınta Monica, CA 90406
213/820-4111

7929 Westpark Drive
McLean, VA 22101
703/790-9850

122 East 42nd Street, Suite 1750
New York, NY 10017
212/697-5120

Michigan Avenue, Suite 500
Chicago, IL 60611
312/944-2797

5680 S. Syracuse Circle, Suite 300
Englewood, CO 80111
303/770-3294

ıway Building, Suite 300 East
4801 Woodway Drive
Houston, TX 77056
/840-8093, 8095 or 8099

INFOMART
Village By The Grange 122 St. Patric Street
Toronto, Ontario M5T 2X8 Canada
416/598-4000

SDC Search Service
Suite 301BIS
Boulevard de Grenelle
Paris, France 75015
33(1) 575-5775
ılex: 20116F SYDECO

System Development Corporation of Japan, Ltd.
Kakuei Building
24-5, Sakuragaoka-Cho, Shibuya-Ku
Tokyo, 150 Japan
03/461-5261
Telex: J23405 SDCJ

Toll Free Numbers: 800/352-6689 (CA), 800/421-7229 (continental U.S. except CA)
Telex: 65-2358—TWX: 910/343-6443

DATA BASE CONTENT

DATA BASE	SCIENCE & TECHNOLOGY	SOCIAL SCIENCE	BUSINESS
ACCOUNTANTS INDEX		X	X
AGRICOLA	X		X
APILIT	X		
APIPAT	X		X
ASI	X	X	X
BIOCODES	X		
BIOSIS & BIO6973	X		
CAS77 & CAS7276	X		
CBPI		X	X
CDI	X	X	X
CHEM7071	X		
CHEMDEX	X		
CIN	X		X
CIS INDEX	X	X	X
CNI		X	X
COMPENDEX	X		X
CONFERENCE PAPERS INDEX	X		
CRDS	X		
CRECORD	X	X	X
ENERGYLINE	X	X	X
ENVIROLINE	X	X	
ERIC	X	X	X
FEDREG	X	X	
FSTA	X		X
GeoRef	X		
GRANTS	X	X	X
INFORM		X	X
INSPEC & INSP6976	X		
ISMEC	X	X	X
LABORDOC		X	X
LIBCON	X	X	X
LISA	X	X	
MANAGEMENT		X	X
NEWSPAPER INDEX	X	X	X
NTIS	X	X	X
OCEANIC	X		
PAPERCHEM	X		X
P/E NEWS	X		X
PESTDOC	X		
POLLUTION	X	X	
PROMT			X
PSYCH ABSTRACTS		X	
QUEBEC-ACTUALITE			X
RINGDOC	X		
SAE	X		X
SAFETY SCIENCE ABSTRACTS	X	X	
SOCIAL SCIENCE CITATION INDEX		X	
SSIE	X	X	X
TITUS	X		
TULSA	X		X
U.S. POLITICAL SCIENCE DOCUMENTS		X	
WPI	X		X

(5/79)

PRICE LIST

THE FOLLOWING IS A COMPLETE LIST OF ALL DATABASE CONNECT HOUR AND PRINT CHARGES. POSTAGE WILL BE CHARGED FOR ALL OFFLINE PRINTS.

		CONNECT ($/HR)	OFFLINE PRINTS PRT/PRT FULL OR TAILORED	ONLINE PRINTS PRT/PRT FULL OR TAILORED
AGLINE		105	.10/.10	
AGRICOLA		40	.10/.15	
APILIT	SUBSCRIBERS	70	.15/.15	.05
	NON-SUBSCRIBERS	100	.25/.25	.15
APIPAT	SUBSCRIBERS	70	.15/.15	.05
	NON-SUBSCRIBERS	100	.25/.25	.15
ASI		110	.25/.35	
BANKER		90	.15/.15	
BIOCODES		45	.10/.10	
BIOSIS/BIO7479/BIO6973		65	.10/.20 .10 PRT TRIAL .05 PRT ISSUE	
CAS77/CAS7276/CAS6771		68	.20/.20	.10
CASSI		60	.20/.90	.12
CHEMDEX1/CHEMDEX2/CHEMDEX3		125	.25/.25	.08
CIN		70	.20/.25	.10
CIS		110	.25/.35	
COLD		95	.25/.25	
COMPENDEX		95	.25/.35	.22
CRDS	SUBSCRIBERS	100	.13/.13	
CRECORD		120	.25/.25	
DBI		45	.25/.25	
EBIB		95	.20/.20	
EDB		45	.15/.25 (INTRODUCTORY OFFER)	
ELCOM		45	.10/.10	
ENERGYLINE		90	.20/.20	
ENVIRONLINE		90	.20/.20	
EPIA		95	.20/.20	
ERIC		40	.10/.15	
FEDEX		120	.20/.25	
FEDREG		105	.25/.25	
FSTA		65	.15/.25	
FOREST		100	.20/.20	
GEOREF		105	.25/.25	.10
GRANTS		70	.35/.35	
INFORM		75	.30/.40	
INSPEC/INSP6976		80	.30/.30	.10
LABORDOC		105	.20/.20	
LIBCON		120	.25/.25	

LISA		50	.10/.10	
MANAGEMENT		80	.25/.25	
MONITOR		90	.15/.15	
NDEX		90	.15/.15	
NTIS		45	.10/.15	
NUC/CODES		40	.10/.10	
ORBIT/ORBCHEM/ORBPAT		40	NA	
P/E NEWS	SUBSCRIBERS	105	.15/.15	.05
	NON-SUBSCRIBERS	105	.25/.25	.15
PESTDOC	SUBSCRIBERS	100	.13/.13	
PIE		50	.10/.10	
POWER		40	.10/.10	
PSYCINFO		65	.10/.15	
RINGDOC	SUBSCRIBERS	100	.13/.13	
SAE		95	.20/.20	
SAFETY		75	.15/.15	
SPORT		70	.15/.15	
SSIE		110	.25/.25	
SWRA		65	.10/.10	
TITUS		85	.20/.20	
TROPAG		70	.20/.20	
TULSA	MAJOR SUBSCRIBERS	75	.15/.15	
	MINOR SUBSCRIBERS	125	.50/.50	
USCLASS		60	.50/.50	
USGCA		105	.20/.20	
USPA		100	.25/.50	
			.75 PRT HIT	
			1.00 PRT ALL	
USRFP1/USRFP3		115	.50/.50	
USRFP2		115	.50/2.00	1.00
VETDOC	SUBSCRIBERS	100	.13/.13	
VOTES		90	.15/.15	
WATERLIT		80	.15/.15	
WPI	SUBSCRIBERS	100	.15/.15	
	NON-SUBSCRIBERS	125	.25/.25	
WPIL	SUBSCRIBERS	105	.15/.15 PRT FAM OR FULL	
			.26 PRT CODE OR TAILORED	
	NON-SUBSCRIBERS	130	.25/.25 PRT FAM OR FULL	
			.45 PRT CODE OR TAILORED	

- STORESEARCHES ARE CHARGED AT THE RATE OF $.05 PER TERM PER MONTH.
- NETWORK TELECOMMUNICATIONS CHARGES ARE $8/HR, FOR EITHER TELENET OR TYMNET.

(EFFECTIVE 1/82)

SYNORG

ɔpe:

Synthetic Organic Chemicals: United States Production and Sales (SYNORG) a single volume annual publication of the U.S. International Trade mission. It receives data from approximately 800 producers, and reports ıestic commercial production and sales of synthetic organic chemicals and the materials from which they are made. Fifteen sections, organized by chemical ısses, deal with: tar and tar crudes; crude products from petroleum and ural gas for chemical conversion; cyclic intermediates; dyes; organic ments; medicinal chemicals; flavor and perfume materials; plastics and resin erial; rubber-processing chemicals; elastomers; plasticizers; surface-active nts; pesticides and related products; miscellaneous end-use chemicals and mical products; and miscellaneous cyclic and acyclic chemicals.

For each of these groups, three separate tables are provided. The first these lists the total production and sales figures for those chemicals for ch there are three or more significant producers. The second table lists the ufacturers for all chemicals (in terms of a code), and the third table defines manufacturers code. The Commission also publishes monthly statistics on of the most significant of these chemicals.

A companion publication entitled "Imports of Benzenoid Chemicals and ıducts, 19xx", is also available from the Commission. For this publication, imported benzenoids are categorized in seven groups as follows: ermediates, finished products, dyes and pigments, medicinals and rmaceuticals, flavor and perfume, and all other finished products. Various les are provided for various groups showing imported quantities by chemical, oice values by country of origin, etc.

Through 1975, data were reported by producers for only those items where volume of production exceeded 1,000 pounds or where the value of sales eeded $1,000. Beginning in 1976, these limits were raised to 5,000 pounds $5,000 for most chemicals and 50,000 pounds and $50,000 for plastics and in materials; the 1,000 pounds and $1,000 limits were retained for organic ments, medicinal chemicals, flavor and perfume materials, rubber processing emicals, and elastomers.

ess:

Available through the U.S. Government Printing Office.

st:

Cost varies with year of publication.

nple Search/Output:

Not applicable.

RETURN TO
UNITED STATES INTERNATIONAL TRADE COMMISSION
WASHINGTON, D.C. 20436
BY APRIL 1, 1980

SYNTHETIC ORGANIC CHEMICALS

PRODUCTION AND SALES IN 1979

BY ORIGINAL MANUFACTURERS ONLY

COMPANY NAME _____

OFFICE ADDRESS _____

CITY _____ STATE _____ ZIP CODE _____

PLANT _____ STATE _____ ZIP CODE _____

If report covers more than one plant, please attach list of plant locations.

The information required in this questionnaire is being collected by the United States International Trade Commission under the authority of section 333 of the Tariff Act of 1930, as amended (19 U.S.C. 1333). The U.S. International Trade Commission is authorized to collect the data requested in this questionnaire under the provisions of section 332 of the Tariff Act of 1930, as amended (19 U.S.C. 1332). The data are bein collected for the use of the U.S. International Trade Commission and for the use of th Domestic and International Business Administration of the Department of Commerce, whic has the authority to collect such data in its own right under section 705 of the Defer Production Act of 1930, as amended (50 U.S.C. App. 2155), and to receive them from the U.S. International Trade Commission pursuant to 44 U.S.C. 3508(b)(4).

This report is mandatory and failure to reply as directed can result in a subpeor or other order to compel the submission of records or information in your possession.

Information supplied by you in this questionnaire or in connection therewith that qualifies as confidential business information within the meaning of the Freedom of Information Act [5 U.S.C. 552(b)(4)] will be so treated by the Commission and not disclosed except as may be required by law. Such information will not be published by the Commission in a manner that will reveal the individual operations of your firm.

IMPORTANT NOTICE: Please enter the necessary data in each of the enclosed secti and return one copy of each to the U.S. International Trade Commission without delay. Be sure each section is clearly identifies as the report from your company. Return tl cover and the Directory of Manufacturers (Section XIX) with the last section you send The report must be signed by an offical of the Company.

1979

SCOPE OF THE REPORT

The complete report used by the U.S. International Trade Commission compiling its annual report on the synthetic organic chemicals industry consists of 19 sections. The first 15 sections are to be used in re- ting data on the production and sales of synthetic organic chemicals their raw materials. Section 16 is to be used for reporting syn- tic organic chemicals which are not covered by the other sections of report. Section 17 is to be used for reporting toll agreements. Sec- ı 18 is to be used for reporting barter agreements. Section 19 provides ›rmation for the Directory of Manufacturers. Only those sections pertain- to the chemicals and chemical products which are believed to be produced ′our company are enclosed.

This report consists of the following sections:

I	Tar, Tar Crudes, and Tar Pitches
II	Primary Products from Petroleum and Natural Gas for Chemical Conversion
III	Cyclic Intermediates
IV	Dyes
V	Organic Pigments
VI	Medicinal Chemicals
VII	Flavor and Perfume Materials
VIII	Plastics and Resin Materials
IX	Rubber-Processing Chemicals
X	Elastomers (Synthetic Rubber)
XI	Plasticizers
XII	Surface-Active Agents
XIII	Pesticides and Related Products
XIV	Miscellaneous End-Use Chemicals and Chemical Products
XV	Miscellaneous Cyclic and Acyclic Chemicals
XVI	Other Synthetic Organic Chemicals
XVII	Toll Agreements
XVIII	Barter Agreements
XIX	Directory of Manufacturers

1979

D560200000I

Waste Characterization Data Base

Acronym: None
Media sampled to generate data: Solid waste
process residuals
Type of data collection/monitoring: Point source data collection industrial
process residuals
Data base status: Operational/ongoing

ABSTRACT: Data on the amount and composition of industrial chemical process residuals. Specific compound identification and concentrations. Includes information on generator of the sample. Samples are analyzed to determine significant materials present, regardless of whether or not they are on any of th pollutant parameter lists.

Non-pollutant parameters include: Chemical data
Disposal
Industry
Location
Manufacturer
Physical data
Production levels
Sampling date
Test/analysis method

Ongoing study time period is 10/01/80 to 09/30/80 (present)
Termination of data collection: Not anticipated

Frequency of data collection: as needed
once or twice per generator

Total estimated number of observations is 200.
Estimated annual increase of observations is 2000.

Data base includes: Raw data/observations
Summary or aggregate observations

Total number of stations or sources covered is 25.
Number currently contributing data is 12 month.
Number of facilities covered is 25.

Geographic coverage of data base: National
Location identifiers of station/source for each record are: State
City
Street address
Project identifier
complete facility
identification

Facility identifiers include: Plant facility name
Plant location

Street address
Dun and Bradstreet number number
ant identification data are: Uncoded

tions: No lab evaluation samples have yet been developed.

ollection and analysis procedures: Sampling plan documented
Collection method documented
Analysis method documented
QA procedures documented
alysis based on EPA-approved or accepted methods.
ion and accuracy estimates partially exist for only part of the data

rocedures used but undocumented.

ollected by: Self reporting in petitions
EPA lab - Environmental Monitoring Systems Lab-Las Vegas, and other Office of Research and Development Labs.
Contractor lab - various
alyzed by: EPA lab - Office of Research and Development Labs (including Environmental Monitoring System Lab-Las Vegas)
Contractor lab - various
EPA headquarters - Office of Solid Waste
se does not identify specific laboratory performing analysis.

ment of regulations or standards is the primary purpose for data collection.
ry authorization is P L 92-580/3007 (Resource Conservation and Recovery Act)
available reports and outputs: Hand searchable as needed
regular users of data base: 15
EPA headquarter offices - Office of Solid Waste
ntiality: Limits on access within EPA and outside agency for all data
physical location of data: Headquarters office
data storage: Original form (hardcopy, readings)
cess: Manually

- Subject matter:David Friedman (202) 755-9187
- responsible EPA Office: Office of Solid Waste Hazardous & Industrial Waste
n (202) 755-9187

for non-EPA use: no outside use/access permitted
cy of master file up-date: as data is obtained

completing form: David Friedman
EPA/(OWWM)/(CSW)/(HIWD)
: 401 M St S.W. Washington, DC 20460
(202) 755-9187

ts included in data base:
hyde 75-07-0
67-64-1
trile 75-05-8
enone 98-86-2

NIOSH CRITERIA DOCUMENTS

Pub No.	Title	GPO Stock No.	Price	NTIS Stock No.	P/C Price	M/F Price
76-195 A	Acetylene	017-033-00175-8	5.50	PB 267-068	11.50	4.50
77-112 A	Acrylamide	017-033-00185-5	6.00	PB 273-871	14.50	4.50
✓ 78-116	Acrylonitrile	*	*	PB81-225-617	7.00	4.50
78-201	Aldrin/Dieldrin (Special Hazard Review)	*	*	PB 297-769	11.50	4.50
77-151 A	Alkanes (C5-C8)	017-033-00213-4	6.00	PB 273-817	14.50	4.50
✓ 76-204 A	Allyl Chloride	017-033-00186-3	5.50	PB 267-071	11.50	4.50
74-136 A	Ammonia	017-033-00036-1	5.50	PB 246-699	13.00	4.50
78-216 A	Antimony	*	*	PB81-226-060	14.50	4.50
74-110 A	Arsenic, Inorganic	*	*	PB 228-151	13.00	4.50
75-149	Arsenic, Inorganic (Revised)	*	*	PB 246-701	14.50	4.50
72-10267	Asbestos	*	*	PB 209-510	14.50	4.50
✓ 77-169	Asbestos (Revised)	017-033-00229-1	5.50	PB 273-965	11.50	4.50
78-106 A	Asphalt Fumes	017-033-00272-0	6.50	PB 277-333	16.00	4.50
74-137	Benzene	017-033-00038-7	6.00	PB 246-700	14.50	4.50
+ A	Benzene (Revised)	NIOSH ONLY	*	*	*	*
✓ 80-109	Benzidine-based dyes (Special Hazard Review)	017-033-00354-8	4.25	PB81-225-633	10.00	4.50
77-166 A	Benzoyl Peroxide	017-033-00221-5	5.50	PB 273-819	14.50	4.50
✓ 78-182 A	Benzyl Chloride	017-033-00316-5	5.50	PB81-226-698	11.50	4.50
72-10268 A	Beryllium	*	*	PB 210-806	13.00	4.50
+	Beryllium (Revised)	*	*	PB83-182-378	7.00	4.50
77-122 A	Boron Trifluoride	017-033-00178-2	5.50	PB 274-747	11.50	4.50
76-192 A	Cadmium	017-033-00206-1	5.50	PB 274-237	11.50	4.50
77-107 A	Carbaryl	017-033-00196-1	7.00	PB 273-801	19.00	4.50
✓ 78-204	Carbon Black	*	*	PB81-225-625	13.00	4.50
76-194 A	Carbon Dioxide	017-033-00199-5	6.50	PB 266-597	17.50	4.50
77-156 A	Carbon Disulfide	017-033-00216-9	7.00	PB 274-199	17.50	4.50
73-11000 A	Carbon Monoxide	*	*	PB 212-629	13.00	4.50
76-133	Carbon Tetrachloride	017-033-00176-6	6.50	PB 250-424	16.00	4.50
+ A	Carbon Tetrachloride (Revised)	NIOSH ONLY	*	*	*	*
76-170 A	Chlorine	*	*	PB 266-367	16.00	4.50
75-114	Chloroform	*	*	PB 246-695	14.50	4.50
+ A	Chloroform (Revised)	NIOSH ONLY	*	*	*	*
77-210 A	Chloroprene	017-033-00239-8	6.50	PB 274-777	17.50	4.50

✓ = We have the Criteria Document.

				[illegible]	19.00	4.50
[illegible]	[illegible] (Special Hazard Review)	*	*	PB81-225-641	10.00	4.50
✓ 78-191	Coal Gasification Plants	*	*	PB80-164-874	19.00	4.50
✓ 81-131	Coal Liquefaction: Vol. I--Summary (Occup. Hazard Assess.)	017-033-00390-4	3.75	PB81-242-877	7.00	4.50
✓ 81-132	Coal Liquefaction: Vol.II--(Occup. Hazard Assessment)	017-033-00391-2	7.00	PB81-242-885	16.00	4.50
✓ 78-107 A	Coal Tar Products	017-033-00273-8	7.00	PB 276-917	17.50	4.50
82-107	Cobalt	017-033-00393-9	5.00	PB82-182-031	13.00	4.50
73-11016 A	Coke Oven Emissions	*	*	PB 216-167	10.00	4.50
✓ 80-106	Confined Spaces, Working In	*	*	PB80-183-015	11.50	4.50
75-118 A	Cotton Dust	*	*	PB 246-696	16.00	4.50
✓ 78-133	Cresol	017-033-00284-3	6.00	*	*	*
77-108 A	Cyanide, Hydrogen and Cyanide Salts	017-033-00163-4	7.00	PB 266-230	19.00	4.50
78-200	DDT (Special Hazard Review)	*	*	PB81-226-656	19.00	4.50
✓ 83-109	Di-2-Ethylhexyl Phthalate ("DOP") Respirator Quantitive Fit Testing (Special Occupational Hazard Review)	*	*	PB83-250-613	8.50	4.50
✓ 78-115	Dibromochloropropane	*	*	PB81-228-728	7.00	4.50
78-215 A	Diisocyanates	*	*	PB81-226-615	16.00	4.50
✓ 78-131	Dinitro-Ortho-Cresol	*	*	PB80-175-870	16.00	4.50
77-226 A	Dioxane	017-033-00254-1	7.00	PB 274-810	19.00	4.50
✓ 83-103	Draft Construction Safety Standards for Excavations, Volume I	*	*	PB84-100-569	13.00	4.50
	Volume II	*	*	PB83-233-353	25.00	4.50
76-128 A	Elevated Work States, Emergency Egress from	*	*	PB 248-594	10.00	4.50
76-206 A	Epichlorohydrin	017-033-00197-9	6.50	PB81-227-019	16.00	4.50
✓ 77-221	Ethylene Dibromide	017-033-00251-7	7.00	PB 276-621	19.00	4.50
76-139 A	Ethylene Dichloride	OUT-OF-PRINT	----	----------	-----	----
✓ 78-211	Ethylene Dichloride (1,2 Dichloroethane) (Revised)	*	*	PB80-176-092	8.50	4.50
77-200	Ethylene Oxide (Special Hazard Review)	*	*	PB 274-795	10.00	4.50
✓ 79-109	Ethylene Thiourea (Special Hazard Review)	*	*	PB81-224-206	11.50	4.50
✓ 77-152	Fibrous Glass	017-033-00214-2	5.50	PB 274-195	19.00	4.50
76-103 A	Fluorides, Inorganic	017-033-00118-9	7.00	PB 246-692	19.00	4.50
✓ 77-193 A	Fluorocarbon Polymers, Decomposition Products of	*	*	PB 274-727	13.00	4.50

✓ = We have the Criteria Document.

A = We have the Abstract (first chapter) of the document.

Pub No.	Title	GPO Stock No.	Price	NTIS Stock No.	P/C Price	M/F Price
✓ 77-126	Formaldehyde	*	*	PB 273-805	17.50	4.50
✓ 79-133 A	Furfuryl Alcohol	*	*	PB80-176-050	10.00	4.50
78-166 A	Glycidyl Ethers	017-033-00313-1	7.00	PB81-229-700	19.00	4.50
✓ 83-125	Hazardous Energy, Guidelines for Controlling During Maintenance & Servicing	017-033-00408-1	3.25	PB84-199-934	11.50	4.50
72-10269 A	Hot Environments	*	*	PB 210-794	13.00	4.50
78-172 A	Hydrazines	*	*	PB81-225-690	23.50	4.50
76-143 A	Hydrogen Fluoride	017-033-00171-5	7.00	PB81-226-516	17.50	4.50
✓ 77-158 A	Hydrogen Sulfide	017-033-00217-7	6.50	PB 274-196	16.00	4.50
78-155 A	Hydroquinone	*	*	PB81-226-508	17.50	4.50
75-126 A	Identification System for Occupationally Hazardous Materials	*	*	PB 246-698	10.00	4.50
76-142 A	Isopropyl Alcohol	017-033-00165-1	6.00	PB 273-873	14.50	4.50
+ A	Kepone	NIOSH ONLY				
78-173 A	Ketones	*	*	PB80-176-076	22.00	4.50
73-11010	Lead, Inorganic	*	*	PB 214-265	13.00	4.50
78-158	Lead, Inorganic (Revised)	017-033-00306-8	7.00	PB81-225-278	19.00	4.50
76-188 A	Logging from Felling to First Haul	*	*	PB 266-411	13.00	4.50
76-205 A	Malathion	*	*	PB 267-070	17.50	4.50
73-11024 A	Mercury, Inorganic	*	*	PB 222-223	14.50	4.50
76-148 A	Methyl Alcohol	017-033-00191-0	6.00	PB 273-806	14.50	4.50
77-106 A	Methyl Parathion	017-033-00202-9	7.00	PB 274-191	17.50	4.50
✓ 78-188	4,4'Methylene bis (2-chloroaniline) (Special Hazard Review)	*	*	PB 297-822	10.00	4.50
76-138 A	Methylene Chloride	*	*	PB81-227-027	17.50	4.50
77-184	Nickel Carbonyl (Special Hazard Review)	017-033-00228-2	4.50	PB 273-795	8.50	4.50
77-164 A	Nickel, Inorganic	017-033-00219-3	8.00	PB 274-201	23.50	4.50
76-141 A	Nitric Acid	017-033-00169-3	5.00	PB81-227-217	11.50	4.50
78-212 A	Nitriles	*	*	PB81-225-534	16.00	4.50
76-149 A	Nitrogen, Oxides Of	*	*	PB81-226-995	19.00	4.50
78-167 A	Nitroglycerin and Ethylene Glycol Dinitate	*	*	PB81-225-526	19.00	4.50
73-11001	Noise	*	*	PB 213-463	16.00	4.50
78-179 A	o-Tolidine	*	*	PB81-227-084	11.50	4.50
77-115 A	Organotin Compounds	017-033-00203-7	7.00	PB 274-766	17.50	4.50
76-190 A	Parathion	017-033-00195-2	5.50	PB 274-192	13.00	4.50

✓ = We have the Criteria Document.

			*	*	PB	266-495	17.50	4.50
76-137	A	Phosgene	*	*	PB	267-514	14.50	4.50
✓ 77-225	A	Polychlorinated Biphenyls	017-033-00265-7	7.50	PB	276-849	20.50	4.50
77-192	A	Refined Petroleum Solvents	OUT OF PRINT	*		*	*	*
✓ 81-133		Rendering Processes, Animal (Occup. Hazard Assess)	017-033-00392-1	5.00	PB82-232-307		10.00	4.50
75-120		Silica, Crystalline	*	*	PB	246-697	14.50	4.50
76-105	A	Soduim Hydroxide	017-033-00110-3	5.50	PB	246-694	13.00	4.50
✓ 83-119		Styrene	*	*	PB84-148-295		22.00	4.50
74-111	A	Sulfur Dioxide	*	*	PB	228-152	13.00	4.50
+		Sulfur Dioxide (Revised)	*	*	PB83-182-485		7.00	4.50
74-128	A	Sulfuric Acid	*	*	PB	233-098	11.50	4.50
77-121	A	1,1,2,2-Tetrachloroethane	*	*	PB	273-802	16.00	4.50
76-185	A	Tetrachloroethylene (Perc)	*	*	PB	266-583	16.00	4.50
78-213	A	Thiols: N-Alkane Mono Cyclohexane, and Benzene	*	*	PB81-225-609		14.50	4.50
73-11023	A	Toluene	*	*	PB	222-219	13.00	4.50
73-11022		Toluene Diisocyanate (Revised: See Diisocyanates)	*	*	PB	222-220	13.00	4.50
76-184	A	1,1,1-Trichloroethane (Methyl Chloroform)	*	*	PB	267-069	17.50	4.50
73-11025	A	Trichloroethylene	*	*	PB	222-222	13.00	4.50
78-130		Trichloroethylene (Special Hazard Review)	*	*	PB81-226-987		11.50	4.50
✓ 77-227	A	Tungsten and Cemented Tungsten Carbide	017-033-00268-1	6.50	PB	275-594	17.50	4.50
73-11009	A	Ultraviolet Radiation	*	*	PB	214-268	13.00	4.50
77-222	A	Vanadium	017-033-00252-5	6.50	PB81-225-658		16.00	4.50
✓ 78-205	A	Vinyl Acetate	017-033-00362-9	5.00	PB80-176-993		11.50	4.50
+	A	Vinyl Chloride	NIOSH ONLY	*		*	*	*
+		Vinyl Halides	NEVER PRINTED	*		*	*	*
✓ 77-140	A	Waste Anesthetic Gases And Vapors	*	*	PB	274-238	19.00	4.50
75-168	A	Xylene	*	*	PB	246-702	13.00	4.50
76-104	A	Zinc Oxide	017-033-00109-0	5.50	PB	246-693	11.50	4.50

To receive copies of these documents, please order from:

Superintendent of Documents
U.S. Government Printing Office (G.P.O.)
Washington, DC 20402

OR

National Technical Information Service (N.T.I.S.)
Springfield, VA 22161

✓ = We have the Criteria Document.

A = We have the Abstract (first chapter) of the document.

* = No longer available from GPO/Not currently available from NTIS.

+ = No publication number assigned.

P/C = Paper Copy

M/F = Microfiche

PRICES AND AVAILABILITY ARE SUBJECT TO CHANGE. August 1984

AREA 1000: COLUMBUS
CSHO 65519: GRIFFING — INSPECTION SUMMARY
REPORT : 13500
SIC 2851: PAINT, VARNISH, LACQR ETC
ESTABLISHMENT: DEAN AND BARRY PAINT COMPANY — INSP TYPE: GENERAL SCHEDULE — INSP PERIOD: 05/20/80 TO 05/20/80
ADDRESS: 296 MARCONI BLVD

FORM #	JOB TITLE	#SIM EXP.		SUBSTANCE NAME	SAMPLE TYPE	RESULTS	EXPOSURE VALUE	UNIT	SEV	STANDARD CITED / TYPE
910152875	BATCH MIXER	3	1591	LEAD, INORGANIC FUMES & D	P	TWA	0.019	M	0.37	19101025 L01 II S
			0260	ARSENIC & COMPOUNDS (AS A	P	N/D				
			0490	CADMIUM DUST (AS CD)	P	N/D				
910152883	JANITOR	1	1591	LEAD, INORGANIC FUMES & D	P	TWA	0.035	M	0.70	
			0260	ARSENIC & COMPOUNDS (AS A	P	TWA	0.000	M	0.01	
			0490	CADMIUM DUST (AS CD)	P	N/D				
910152891	EMPLOYEE WHO STRIPS	3	1730	METHYLENE CHLORIDE (DICHL	P	TWA	132.000	P	0.26	
910152909	TUB CLEANER	4	1730	METHYLENE CHLORIDE (DICHL	P	TWA	151.460	P	0.30	
910152925	MIXER	3	0690	CHROMIUM, SOLUBLE CHROMIC	P	N/D				
			1591	LEAD, INORGANIC FUMES & D	P	N/D				
			0260	ARSENIC & COMPOUNDS (AS A	P	N/D				
910152933	MIXER	3	1591	LEAD, INORGANIC FUMES & D	P	TWA	0.012	M	0.24	
			0690	CHROMIUM, SOLUBLE CHROMIC	P	TWA	0.004	M	0.01	
910152941	MIXER	3	1620	MANGANESE & COMPOUNDS (AS	P	CEILING	0.120	M	0.02	
910152917	POURER	1	2037	PETROLEUM DISTILLATES (NA	P	TWA	148.000	M	0.07	

OSHA REPORT: OHDS 4 U. S. D E P A R T M E N T O F L A B O R

REGION 05: CHICAGO OCCUPATIONAL SAFETY AND HEALTH ADMINISTRATION APRIL 17, 1981
AREA 1800: COLUMBUS
CSHO K8492: KENNEDY INSPECTION SUMMARY
REPORT : 00100
SIC 7216: DRY CLEANING PLANTS
ESTABLISHMENT: TEXTILE-TECH INC DBA BEECHWOLD INSP TYPE: GENERAL SCHEDULE INSP PERIOD: 07/08/80 TO 07/29/80
ADDRESS: 161 THURMAN AVE REAR

FORM #	JOB TITLE	#SIM EXP.		SUBSTANCE NAME	SAMPLE TYPE	RESULTS	EXPOSURE VALUE	UNIT	SEV	STANDARD CITED / TYPE
910146966	WORKER DRYER OPERATO	1	2020	PERCHLOROETHYLENE (TETRAC	P	TWA	5.800	P	0.06	
			0570	CARBON TETRACHLORIDE - SK	P	N/D				
			2490	TRICHLOROETHYLENE	P	N/D				
970002580		1	2020	PERCHLOROETHYLENE (TETRAC	S		100.000	P		
		1	2490	TRICHLOROETHYLENE	S		0.000	P		

REGION 05: CHICAGO — OCCUPATIONAL SAFETY AND HEALTH ADMINISTRATION — APRIL 17, 1981
AREA 1800: COLUMBUS
CSHO T6076: THOMAS — INSPECTION SUMMARY
REPORT : 03800
SIC 3322: MALLEABLE IRON FOUNDRIES
ESTABLISHMENT: J G CASTINGS OPERATIONS DRESSE — INSP TYPE: COMPLAINT — INSP PERIOD: 08/14/79 TO 08/17/79
ADDRESS: 550 SOUTH LIBERTY ROAD

FORM #	JOB TITLE	#SIM EXP.		SUBSTANCE NAME	SAMPLE TYPE	RESULTS	EXPOSURE VALUE	UNIT	SEV	STANDARD CITED / TYPE
910050392	SHAKEOUT MAN	1	9010	SILICA (QUARTZ), RESPIRAB	P	N/D				
910050400	SHAKE OUT OPERATOR	1	9010	SILICA (QUARTZ), RESPIRAB	P	N/D				
910050416	COLD SET CORE MAKER	1	1290	FORMALDEHYDE	P	CEILING	0.260	P	0.05	
			1013	CORUNDUM (AL2O3)	P	CEILING	0.100	M	0.50	
910050426	CASTING STOCKMAN	1	1720	METHYL CHLOROFORM	P	N/D				
			2490	TRICHLOROETHYLENE	P	TWA	81.610	P	0.82	
910050434	COLD SET CORE MAKER	1	2220	PYRIDINE	P	N/D				
910050442	PEP SET CORE FINISHE	4	1720	METHYL CHLOROFORM	P	TWA	33.570	P	0.10	
			2490	TRICHLOROETHYLENE	P	TWA	43.350	P	0.43	
910050459	OIL SAND CORE FINISH	1	1720	METHYL CHLOROFORM	P	TWA	68.500	P	0.20	

UNITED STATES ENVIRONMENTAL PROTECTION AGENCY
WASHINGTON, D.C. 20460

OFFICE OF
PESTICIDES AND TOXIC SUBS

Adapted from:

BIBLIOGRAPHY OF PROTECTIVE CLOTHING DATA

April 28, 1982

Protective Clothing Working Group
Office of Pesticide Programs
United States Environmental Protection Age
Washington, DC 20460

Prepared by:

Richard V. Moraski, Ph.D.
Environmental Fate Branch
Hazard Evaluation Division (TS-769)
Office of Pesticide Programs
(703) 557-7347

_____, 1974. Occupational Satety and Health: Personal Protective
vices, Federal Register, 39(121): 22276-22277, June 21.

_____, 1979. U. S. Army Natick R & D Command Makes Protective
othing for EPA, Pest Control, p 38, Dec.

_____, 1980. Draft Proposals for Poisonous Substances in Agriculture
gulations, International Environment Reporter, p 562-576, Dec. 10. Published
The Bureau of National Affairs, Inc.

_____, 1980. Occupational Health and Safety Letter, 10(3): 1, 4, and 5,
b. 8.

_____, 1980. TOK Cancellation or Suspension the Expected EPA and
lifornia Decision, Pesticide and Toxic Chemical News, 8(30): 28, June 18.

_____, 1981. Protective Clothing Studies Reveal Wearer Preferences,
richemical Age, p 15-16, June.

erican Hoechst Corporation, 1981. Estimation of the Exposure of Applicator
rsonnel to Hoelon® 3EC Using Commercial Ground Equipment, Preliminary Report,
ruary.

rican Society for Testing and Materials, 1975. Standard Method of Test of
meablilty of Vulcanized Rubber to Volatile Liquids, ASTM Standards, 37: 189-190,
signation: D 814 - 55 (Reapproved 1970).

rican Society for Testing and Materials, 1975. Standard Recommended Practice for
ermining Permeability of Thermoplastic Containers, ASTM Standards, 36: 488-492,
signation: D 2864-73.

rican Society for Testing and Materials, 1981. Standard Test Method for
istance of Protective Clothing Materials to Permeation by Hazardous Liquid
micals, Annual Book of ASTM Standards, Designation: F739-81.

resen, W.V., C.R.E. Merkle, Jr., W.S. Colehower, M.F. Shields, 1972.
tective Clothing, Goggles, Gloves and Foot Coverings-Their Value During
dling and Use of Pesticides. Special Panel Proceedings of the National
ference on Protective Clothing and Safety Equipment for Pesticide
kers. Center for Disease Control, Atlanta, GA., May, 1972.

hur D. Little, Inc., 1979. Protective Clothing Against Carcinogens,
mical and Engineering News, p 15, Apr. 2.

_____, 1967. Respirators and Protective Clothing. International Atomic Energy Agency, Safety Series No. 22, Vienna.

_____, 1971. OSHA Standards. Personal Protective Equipment, Federal Register, 36(106): 10590, May 29.

_____, 1973. Occupational Health Units Giving Closer Scrutiny to Toxic Chemicals, Pesticide Chemical News, p 7, Apr. 18.

_____, 1973. OSHA Standards Cover Protective Clothing for Farm Workers, Pesticide Chemical News, p 5, May 2.

_____, 1973. Role of NIOSH, Pesticide Chemical News, p 2, Oct. 24.

_____, 1974. Role of Disposable Products in Protective Clothing, Industrial Safety, 20(11): 8-9, Nov.

Barenklau, K.E., 1976. Tips for Gaining Acceptance of a Personal Protectiv Equipment Program, Professional Safety, 21(3): 20-25, Mar.

Barraclough, R.N.J., 1976. Modern Concepts of Respiratory Protection, Ann Occup Hyg, 19(3/4): 351-355, Dec.

Berger, M.R., 1976. Safety Clothing: A Matter of Personal Protection, National Safety News, 114(3): 63-67, Sept.

Bennet, D.C., 1981. Hand Protection, Hlth Saf Work, 3(9): 32-35, May.

Blatchford, O.N., Ed., 1976. Chemical Control: Pesticides and Fertilizers in Forestry. Entopath News (Supplement) October 1976, published by Alice Holt, Farnham, UK, Forestry Commission.

Branson, D., 1980. Factors Affecting the Penetration of Fabrics by Pestic: Sprays, Dept. of Human Environment and Design, College of Human Ecology, M: State University, East Lansing, MI, Mar.

Brinckman, D., 1976. National Pest Control Association, Inc. Letter to Robert Barghini, Dec. 16.

:alingaert, G. and H. Shapiro. 1948. Permeability of Protective Glove 'aterials to Tetraethyllead and Ethylene Bromide, Industrial and Engineering hemistry, Industrial Edition, 40(2): 332-335.

hapman, A.C. and G. Miller, 1980. Fibres, Fabrics, and Finishes for R Workwear in Europe, Journal of Coated Fabrics, 10: 26-34, July.

iba-Geigy Corporation. Galecron Use Guidelines. (No publication information vailable.)

layton, F.H., 1935. The Measurement of the Air Permeability of Fabrics, ournal of the Textile Institute, Transactions, 26: T171.

oletta, G.C., A.D. Schwope, I.J. Arons, J.W. King, and A. Sivak, 1977. evelopment of Performance Criteria for Protective Clothing Used Against arcinogenic Liquids. Contract No. 210-76-0130, National Institute for ccupational Safety and Health, A. D. Little, Inc., Cambridge, Mass.

:oley, J.J., 1966. Protective Clothing—Responsibilities of the Industrial 'gienist, American Industrial Hygiene Association Journal, 27: 140-143.

irry, J.E. and M.D. McKinley, 1973. Transient Permeation of Organic Vapors irough Elastomeric Membranes, Journal of Polymer Science: Polymer Physics lition, 11: 2209-2225.

ivies, J.E. and V.H. Freed, 1980. Minimizing Occupational Exposure to esticides, University of Miami, School of Medicine, Miami, FL.

vies, J.E., V.H. Freed, H.F. Enos, 1979. Instruments for Exposure sessment of the Pesticide Worker and the Role of Protective Clothing. esented at IX International Congress for Plant Protection. Washington, ', August 5-11.

vies, J.E., V.H. Freed, H.F. Enos, A. Barquet, C. Morgade, L.J. Peters, d J.X. Danauskas, 1981. The Reduction of Pesticide Exposure with otective Clothing. (No publication information available.)

vis, J.E., 1980. Minimizing Occupational Exposure to Pesticides: rsonnel Monitoring, Residue Reviews, 75: 33-50.

vis, J.E. and E.R. Stevens, 1980. The Exposure of Workers During Seed tato Treatment with Captan: Preliminary Report, 1980. Wenatchee Pesticides search Branch, Environmental Toxicology Division, HERL-RTP, Wenatchee, WA.

Deutsch, A.E. and A.P. Poole, Eds., 1972. Manual of Pesticide Application Equipment. Published by International Plant Protection Centre, Oregon State University, Corvallis, OR.

Dunlop, Ltd., GRG Div., 1979. Industrial Gloves and Gauntlets. Manchester,

Douglas, D.D., 1978. Respiratory Protective Devices. Chapter 21 from Patty Industrial Hygiene & Toxicology, Vol. 1, 3rd ed., G.D. Clayton and F.E. Clayton, Eds., John Wiley & Sons, New York, p 993-1056.

Durham, W.F., 1963. An Additional Note Regarding Measurement of the Exposur Workers to Pesticides, Bulletin of the World Health Organization, 29: 279-28

Durham, W.F. and H.R. Wolfe, 1972. Absorption and Excretion of Parathion by Spraymen, Archives of Environmental Health, 24: 381-387, June.

Easley, C.B., J.M. Laughlin, R.E. Gold, and D.R. Tupy, 1981. Methyl Parathion Removal from Denim Fabrics by Selected Laundry Procedures. Dept. of Textiles, Clothing and Design, University of Nebraska-Lincoln. Submitted for publication to Bulletin of Environmental Contamination and Toxicology.

Ellzey, S.E., Jr., W.J. Connick, Jr., G.L. Drake, Jr., and W.A. Reeves, 1969. Oil-repellent Finish for Cotton Based on Fluorinated Amines, Textile Research Journal, 39(9): 809-815.

Fahmy, S.M.A. and K. Slater, 1977. The Use of an Acoustic Test to Predict Fabric Comfort Properties in On Clothing Comfort: Interaction of Thermal, Ventilation, Construction and Assessment Factors. N.R.S. Hollies and R.F. Goldman, Eds., Ann Arbor Science Publishers, Ann Arbor, MI, Chapt. 3, p 19

Federal Working Group on Pest Management, 1972. Proceedings of the Nation Conference on Protective Clothing and Safety Equipment for Pesticide Workers. Center for Disease Control, Atlanta, GA., May.

Feldmann, R.J. and H.I. Maibach, 1974. Percutaneous Penetration of Some Pesticides and Herbicides in Man, Toxicology and Applied Pharmacology, 28: 126-132.

Finley, E.L., J.B. Graves, F.C. Hewitt, H.F. Morris, C.W. Harmon, F.A. Iddings, P.E. Schilling, and K.L. Koonce, 1979. Reduction of Methyl Parathion Residues on Clothing by Delayed Field Re-entry and Laundering, Bulletin of Environmental Contamination and Toxicology, 22(4-5): 590-597.

Finley, E.L., G.I. Metcalf, F.G. McDermott, J.B. Graves, P.E. Schilling, and F.L. Bonner, 1974. Efficacy of Home Laundering in Removal of DDT, Methyl Parathion and Toxaphene Residues from Contaminated Fabrics. Bulletin of Environmental Contamination and Toxicology, 12: 268-274.

Finley, E.L. and J.R.B. Rogillio, 1969. DDT and Methyl Parathion Residues Found in Cotton and Cotton-Polyester Fabrics Worn in Cotton Fields. Bulletin of Environmental Contamination and Toxicology, 4: 343-351.

Bothergill & Harvey Ltd., 1980. Aramid Fibre Fabric, Plast Rubb Wkly, 363): 1, Nov. 15.

Franklin, C.A., R.A. Fenske, R. Greenhalgh, L. Mathieu, H.V. Denley, J.T. Geffingwell, and R.C. Spear. A Comparison of Direct and Indirect Methods of Estimating Dermal Exposure to Guthion in Orchard Workers. Environmental Health Directorate, Health and Welfare Canada, Ottawa. (No publication information available.)

Freed, V.H., L.J. Peters, and F. Parveen, 1980(?). Repellency and Penetration of Treated Textiles to Pesticide Sprays. Dept. of Agricultural Chemistry. Oregon State University, (No publication information available.)

Freeman, N.T., 1977, Protective Clothing - A Survey: Wool, Industrial Safety, 3(6): 10-11.

Fuller, T.P. and C.E. Easterly, 1979. Tritium Protective Clothing. Oak Ridge National Laboratory Report, Oak Ridge, TN, ORNL/TM-6671, June.

Fuhlbach, S.H., W.A. Williams, and J.I. Freeman, 1979. Protective Clothing as a Means of Reducing Nicotine Absorption in Tobacco Harvesters, Archives of Environmental Health, 34(2): 111-114, Mar./Apr.

Gisow, M., 1980. Keeping Warm and Dry on a Mountain, New Scientist, 87(1214): 535-537, Aug.

Getchell, N.F., 1955. Cotton Quality Study III: Resistance to Soiling, Textile Research Journal, 25(2): 150-194.

Gough, T.A., K.S. Webb, and M.F. McPhail, 1978. Diffusion of Nitrosamines Through Protective Gloves in Environmental Aspects of N-Nitroso Compounds, E.A. Walker, Ed., Lyon, p 531-534. R.ROOM. 33L.

Gunther, F.A., Ed., 1980. Research Conference and Workshop On: Minimizing Occupational Exposure to Pesticides, Residue Reviews, 75: ix-xi + 183 pp.

Hansen, J.D., B.A. Schneider, B.M. Olive, and J.J. Bates. Personnel Safety and Foliage Residue in an Orchard Spray Program Using Guthion and Captan. Chemical and Biological Investigations Branch, US EPA, Beltsville, MD.

Hansen, J.D., B.A. Schneider, B.M. Olive, and J.J. Bates, 1978. Personnel Safety and Foliage Residue in an Orchard Spray Program Using Guthion and Captan, Archives of Environmental Contamination and Toxicology, 7: 63-71.

Henane, R., J. Bittel, R. Viret, and S. Morino, 1979. Thermal Strain Resulting from Protective Clothing of an Armored Vehicle Crew in Warm Conditions, Aviation, Space, and Environmental Medicine, 50(6): 599-603, Ju

Henry, III, N.W., 1980. Permeability Resistance of Tyvek® Composites to Lannate®, Haskell Laboratory for Toxicology and Industrial Medicine, E.I. du Pont de Nemours and Company, Haskell Laboratory Report No. 969-80, Dec. 12.

Henry, III, N.W. and C.N. Schlatter, 1981. The Development of a Standard Method for Evaluating Chemical Protective Clothing to Permeation by Hazard: Liquids, American Industrial Hygiene Association Journal, 42(3): 202-207, !

Hickey, K.D., 1981. Dermal and Respiratory Exposure of Orchard Airblast Sprayer Operators to Benomyl, Mancozeb and Ethylene Thiourea During Loadin and Spraying. Research Agreement No. 801-15-73 with USDA. The Pennsylvan. State University, Fruit Research Laboratory, Biglerville, PA.

Hogstedt, D. and R. Stahl, 1980, Skin Absorption and Protective Gloves in Dynamite Work, American Industrial Hygiene Association Journal, 41(5): 367-372, May.

Hyatt, E.C., 1976. Respirator Protection Factors. Los Alamos Scientific Laboratory, US ERDA, Jan.

Jacobs, W.W., 1980. Closed Systems for Mixing and Loading. Presented at Determination and Assessment of Pesticide Exposure Conference, Hershey, PA, Sponsored by NJAES, USDA, US EPA.

Jegier, Z., 1969. Pesticide Residues in the Atmosphere, Annals of the New York Academy of Sciences, 160(Part 1): 143-154, June 23.

Jegier, Z. and Brodeur, J., 1968. Exposure to Pesticides in Quebec, Canadian Journal of Public Health, 59: 229-232.

Johnson, T.C. and W.D. Merciez, 1971. Permeation of Halogenated Solvents Through Drybox Gloves. US Atomic Energy Commission, RFP-1608: 1-5, Apr. 16.

Kawar, N.S., F.A. Gunther, W.F. Serat, and Y. Iwata, 1978. Penetration of Soil Dust Through Woven and Nonwoven Fabrics, Journal of Environmental Science and Health, B13(4): 401-415.

Laughlin, J.M., C.B. Easley, R.E. Gold, and D.R. Tupy, 1981. Methyl Parathion Transfer from Contaminated Fabrics to Subsequent Laundry and to Laundry Equipment. Dept. of Textiles, Clothing and Design, University of Nebraska-Lincoln. Final Draft. (No publication information available.)

Lavy, T.L., 1980. Determination of 2,4-D Exposure Received by Forestry Applicators, Spring 1980. Final Draft to National Forest Products Association, Oct.

Lavy, T.L., J.D. Mattice, R.R. Fynn, and M. Davis, 1982. Linking Applicator Exposure to Pesticides, World of Agricultural Aviation, p 33-37, March.

Lee, B.G., 1975. Two memos regarding respirators. USDA, APHIS, May 30.

Lillie, T.H., M.A. Hamilton, J.M. Livingston, and K. Porter, 1980. The Effects of Water Temperature on Decontamination of Pesticide Applicator Clothing, US Air Force Occupational and Environmental Health Laboratory, Brooks AFB, TX, Report No. OEHL-80-35, Sept.

Lindsay, I.S. and J.M. McAndless, 1978. Permethrin-treated Jackets Versus Repellent-treated Jackets and Hoods for Personal Protection against Black Flies and Mosquitoes, Mosquito News, 38(3): 350-356.

Mackintosh, C.A. and O.M. Lidwell, 1980. The Evaluation of Fabrics in Relation to Their Use as Protective Garments in Nursing and Surgery. III. Wet Penetration and Contact Transfer of Particles Through Clothing, Journal of Hygiene, Cambridge, 85(3): 393-403.

Maddy, K.T., B. Barrish, 1979. Occupational Illnesses of Mixers and Loaders of Pesticides in 1978. Worker Health and Safety Unit, Division of Pest Management, Environmental Protection, and Worker Safety, California Departme of Food and Agriculture, HS-672, Dec. 14.

Maddy, K.T., B. Cusick, A.S. Frederickson, D. Richmond, F. Mazza, R. Beall, 1979. A Summary of Studies in California During 1978 and 1979 Concerning th Potential Hazard to Applicators and Other Persons Exposed During Field Applications of Ethylene Dibromide (EDB). Worker Health and Safety Unit, Division of Pest Management, Environmental Protection, and Worker Safety, California Department of Food and Agriculture, HS-593, Nov. 15.

Maddy, K.T., L. Johnston, B. Cusick, F. Schneider, T. Jackson, C. Cooper, A.S. Frederickson, 1979. A Study in Southern California in July 1979 of the Potential Dermal and Inhalation Exposure of Applicators and Other Persons Who Might Later Enter or Occupy Areas Treated with Chlordane Used Against Subterranean Termites Under Houses. Worker Health and Safety Unit, Division of Pest Management, Environmental Protection, and Worker Safety, California Department of Food and Agriculture. Nov., HS-683.

Maibach, H.I. and R. Feldman, 1974. Systemic Absorption of Pesticides Throu the Skin of Man. Occupational Exposure to Pesticides, Milling, Ed., p 120-

Maibach, H.I., R.J. Feldman, T.H. Milby, and W.F. Serat, 1971. Regional Variation in Percutaneous Penetration in Man, Archives of Environmental Health, 23: 208-211, Sept.

McFee, D.R., 1964. How Well Do Gloves Protect Hands Against Solvents? American Society of Safety Engineers Journal, Technical Section, IX(5): 11-1

Meares, P., 1965. Transient Permeation of Organic Vapors through Polymer Membranes, Journal of Applied Polymer Science, 9: 917-932.

Merino, M., 1981. Laboratory Note: Personal Monitoring, American Laborato p 92, Aug.

Mick, D.L., 1973. The Tractor Cab as a Protective Device During Pesticide Applications. Presented at 1973 Winter Meeting American Society of Agricultural Engineers, Chicago, Dec. 11-14.

ilby, T.H., J.E. Davies, H.R. Wolfe, D.P. Morgan, E. Kahn, R.C. Spear, .F. Serat, W.J. Popendorf, S. Warnick, J.F. McCarthy, W.F. Spencer, and T. Maddy, 1976. Workshop Proceedings. Pesticide Residue Hazards to ırm Workers. US DHEW, PHS, CDC, NIOSH, WALOSH, Salt Lake City, UT, May.

ısanto Co., 1980. Response of June 20, 1980 to Diallate RPAR. ɔendix C: Calculation of Maximum Lifetime Applicator Exposure to allate. Monsanto Agricultural Products Co., St. Louis, MO. Final ɔort No. MSL-1150. Applicator Exposure Study for Avadex® Herbicide ler Actual Field Conditions.

ısanto Co., 1980. Response of June 20, 1980 to Diallate RPAR. ɔendix C: Calculation of Maximum Lifetime Applicator Exposure to allate. Monsanto Agricultural Products Co., St. Louis, MO. Final ɔort No. MSL-1155. Applicator Exposure Study for Avadex® BW Herbicide ler Actual Field Conditions.

ısanto Co., 1980. Response of June 20, 1980 to Diallate RPAR. ɔendix C: Calculation of Maximum Lifetime Applicator Exposure to llate. Monsanto Agricultural Products Co., St. Louis, MO. Interim ɔort No. MSL-1118. Applicator Exposure Study for Avadex® BW Herbicide ler Actual Field Conditions: A Status Report.

santo Co., 1981. Applicator Exposure Study with Avadex® Emulsifiable centrate Herbicide Using Closed-System Tank Fills. Final Report. Special ort MSL-1454, Feb. 6, Monsanto Agricultural Products Co., St. Louis, MO.

santo Co., 1981. Applicator Exposure Study with Avadex® BW Emulsifiable centrate Hervicide Using Closed-System Tank Fills. Final Report. Special ɔrt MSL-1468, Feb. 9, Monsanto Agricultural Products Co., St. Louis, MO.

aski, R.V., 1980. Respirator Efficiency in CDFA TOK Exposure Study. EPA, EFB, HED, OPP. Memo to SPRD, Aug. 25.

aski, R.V., 1981. Review of Catalog of Protective Clothing/Safety ipment for the Pesticide Applicator. US EPA, EFB, HED, OPP, Memo to ɔ, May 14.

eau, J.P., S.E. Ellzey, Jr., and G.L. Drake, Jr., 1967. Perfluoro Ester-ridine Oil Repellent Finish for Cotton, American Dyestuff Reporter, 56(4): 12.

risiden, H.T. and O. Faber, 1973. Penetration of Protective Gloves by ergens and Irritants, Transactions of St. John's Hospital Dermatological iety, 59: 230-234.

Mueller, W.J., 1957. Permeability of Rubber to Organic Liquids, Rubber Age, 81(6): 982-987.

National Agricultural Aviation Association, 1976. Safety Tips for Ground Cr
World of Agricultural Aviation, 3(2): 12-15, Feb.

National Pest Control Association, Inc., 1977. Respiratory Devices-II. Technical Release, Jan. 14.

National Pest Control Association, Inc., 1977. Respiratory Devices-III. Technical Release, Jan. 28.

Nelson, G.O., B.Y. Lum, G.J. Carson, C.M. Wong, and J.S. Johnson, 1979. Glove Pemeation by Organic Solvents, Lawrence Livermore Laboratory, Livermore, CA., UC-UD 17758, Sept. 25.

NIOSH, 1981. Official Record of the NIOSH Public Meeting on Chemical Protective Clothing, June 3, 1981, Rockville, MD. US DHHS, PHS, CDC, NIOSH-ALOSH, Morgantown, WV.

Orlando, J., D. Branson, M. Henry, 1980. The Development and Evaluation of Protective Apparel for Pesticide Applicators. Presented at Determination ar Assessment of Pesticide Exposure Conference, Hershey, PA, Oct. Sponsored by NJAES, USDA, US EPA.

Orlando, J., D. Branson, G. Ayres, R. Leavitt, 1981. The Penetration of Formulated Guthion Spray Through Selected Fabrics. Journal of Environmental Science and Health, B16(5): 617-628.

Orlando, J., A. Howitt, and G. Ayers, 1979. Reduction of Dermal Exposure of the Operator in Pesticide Application Through the Development of Functior Apparel. Proposal submitted to NCR Pesticide Impact Assessment Program, Nov

OSHA, 1973. Occupational Safety and Health Standards. Emergency Temporary Standard for Exposure to Organophosphorous Pesticides, Federal Register, 38(83): 10715-10720, May 1.

OSHA, 1973. Occupational Safety and Health Standards. Exposure to Organophosphorus Pesticides, Federal Register, 38(125): 11214-11216, June 1

OSHA/NIOSH. Draft Technical Standard and Supporting Documentation for Chlorinated Camphene. (No publication information available.)

Oxley, G.R., 1976. Protective Clothing in the Context of Health Protection Against Toxic Chemicals, Ann Occup Hyg, 19(2): 163-167, Nov.

ttman, A.G., J.N. Roitman, and D. Sharp, 1971. Hydrophilicity in Fluoro-
emical Stain Release Polymers, Textile Chemist and Colorist, 3(7): 175-180.

itchard, J.A., 1976. A Guide to Industrial Respiratory Protection. NIOSH
chnical Information, US DHEW, PHS, CDC, NIOSH. HEW Publication No. (NIOSH)
-189, June.

oples, S.A., K. Maddy, P.R. Datta, L. Johnston, C. Smith, D. Conrad, C.
oper, 1979. Monitoring of Potential Exposures of Mixer/Loaders, Pilots,
d Flaggers During Application of Tributyl Phosphorotrithioate (DEF) and
ibutyl Phosphorotrithioite (Folex) to Cotton Fields in the San Joaquin
lley of California in 1979. Worker Health and Safety Unit, Division of
st Management, Environmental Protection, and Worker Safety, California
partment of Food and Agriculture, HS-676, Nov. 14.

oples, S.A., K.T. Maddy, C. Kahn, and P. Conrad, 1979. A Study of the
ssible Exposure Hazards to Workers Associated with the Application of
dium Arsenite to Grape Vineyards. Worker Health and Satety Unit, Division
Pest Management, Environmental Protection, and Worker Safety, California
partment of Food and Agriculture, HS-684, Nov. 6.

inby, G.E., K.C. Walker, and W.F. Durham, 1958. Public Health Hazards Involved
the Use of Organic Phosphorus Insecticides in Cotton Culture in the Delta Area
Mississippi, Journal of Economic Entomology, 51(6): 831-838, Dec.

ven, P.B., A.T. Dodson, and T.O. Davis, 1979. The Physiological Consequences
Wearing Industrial Respirators: A Review, American Industrial Hygiene
sociation Journal, 40: 517-534, June.

ven, P.B., A. Dodson, and T.O. Davis, 1979. Stresses Involved in Wearing
C Supplied Air Suits. A Review, American Industrial Hygiene Association
urnal, 40(7): 592-599, July.

hm and Haas Company, 1981. Rohm and Haas Company Rebuttal of Rebuttable
esumption Against Registration and Continued Registration of Pesticide
oducts Containing Ethylenebisdithiocarbamates, Volume XXIV, Section 57,
sticide Applicator and Mixer-Loader Exposure Studies in Agricultural,
rial and Ground Applications and in Home Gardener Use, September.

se, C., 1975. ANSI Z88 Subcommittee on Pesticide Respirators. Minutes
meeting held at Crystal Mall 2, US EPA, Nov. 12-13.

ssell, L.S., 1981. Catalog of Protective Clothing/Safety Equipment for
e Pesticide Applicator. The Mitre Corporation under Contract No.
-01-5944 and 69-01-5965, sponsored by US EPA.

Sansone, E.B. and Y.B. Tewari, 1978. Permeability of Laboratory Gloves to Selected Nitrosamines in Environmental Aspects of N-Nitroso Compounds, E.A. Walker, Ed., Lyon, p 517- 529. R.ROOM. 33L.

Sansone, E.B. and Y.B. Tewari, 1978. The Permeability of Laboratory Gloves to Selected Solvents, American Industrial Hygiene Association Journal, 39: 169-17

Sansone, E.B. and Y.B. Tewari, 1978. Penetration of Protective Clothing Materials by 1,2-Dibromo-3-chloropropane, Ethylene Dibromide, and Acrylonitrile, American Industrial Hygiene Association Journal, 39: 921-922.

Sansone, E.B. and Y.B. Tewari, 1980. Differences in the Extent of Solvent Penetration Through Natural Rubber and Nitrile Gloves from Various Manufacture American Industrial Hygiene Association Journal, 41(7): 527-528, July.

Sansone, E.B. and Y.B. Tewari, 1980. The Permeability of Protective Clothing Materials to Benzene Vapor, American Industrial Hygiene Association Journal, 41: 170-174.

Schiefer, H.F. and P.M. Boyland, 1942. Improved Instrument for Measuring the Air Permeability of Fabrics, Journal of Research of the National Bureau of Standards, 28: 637-642.

Schreck, C.E., D.A. Carlson, D.E. Weidhaas, K. Posey, and D. Smith, 1980. Wear and Aging Tests with Permethrin-Treated Cotton-Polyester Fabric, Journal of Economic Entomology, 73(3): 451-453, June.

Schreck, C.E., K. Posey, and D. Smith, 1978. Durability of Permethrin as a Potential Clothing Treatment to Protect against Blood-feeding Arthropods, Journal of Economic Entomology, 71(3): 397-400.

Schreck, C.E., N. Smith, D. Weidhaas, K. Posey, and D. Smith, 1978. Repellen vs Toxicants as Clothing Creatments for Protection from Mosquitoes and Other Biting Flies, Journal of Economic Entomology, 71(6): 919-922.

Schlatter, C. An Introduction to Permeation. Report for Becton Dickinson and Company. (No publication information available.)

Schulte, F., 1973. Personal Protective Devices. Ch. 36, The Industrial Environment-Its Evaluation & Control, US DHEW, PHS, CDC, NIOSH, p 519-531.

Schwope, A.D., 1979. Protective Clothing, Chemical and Engineering News, p 4, May 14.

erat, W.F., and A.J. Van Loon, 1979(?). Some Factors Influencing the Design f Fabrics for Protective Garments for Pesticide Field Workers. State Dept. f Health, Berkeley, CA.

erat, W.F., R.J. Feldman, and H.I. Maibach, 1973. Percutaneous Absorption f Toxicants, National Pest Control Operator NEWS, p 6, Oct.

nerman, P.O., S. Smith, and B. Johannessen, 1969. Textile Characteristics ffecting the Release of Soil During Laundering. Part II: Fluorochemical oil-Release Textile Finishes, Textile Research Journal, 39(5): 449-459.

inger, J., 1980. Pesticide Safety. Guidelines for Personnel Protection. SDA, Forest Service, Forest Pest Management, Methods Application Group, avis, CA.

owronski, B.J., 1978. Personal Protective Equipment for 1,2-Dibromo- chloropropane (DBCP), Memo to F.C. Omelia, Ag. Products Dept., Dow emicals, Mar. 27.

MC, 1982. Personal Protective Equipment and Clothing. Springborn anagement Consultants, Inc. Enfield, Connecticut.

ith, D.J., 1980. Protective Clothing and Thermal Stress, Ann Occup Hyg, (2): 217-224.

ith, J.G., R.W. Fischer, and H. Blank, 1961. The Epidermal Barrier: A mparison Between Scrotal and Abdominal Skin, Journal of Investigative rmatology, 36: 337-343.

ith, S. and P.O. Sherman, 1969. Textile Characteristics Affecting the lease of Soil During Laundering. Part I: A Review and Theoretical nsideration of the Effects of Fiber Surface Energy and Fabric Construction Soil Release, Textile Research Journal, 39: 441-449.

aiff, D.C., J.E. Davis, and E.R. Stevens, 1981. Evaluation of Various othing Materials for Protection and Worker Acceptability During Application Pesticides. Presented at Division of Pesticide Chemistry, American emical Society Meeting, Atlanta, GA, Mar. 29-Apr. 3. Submitted for olication to Archives of Environmental Contamination and Toxicology.

aiff, D.C., S.W. Comer, J.F. Armstrong, and H.R. Wolfe, 1975. Exposure to Herbicide Paraquat, Bulletin of Environmental Contamination and Toxicology, (3): 334-340.

nnett, V., and H. Yasuda, 1963. Liquid vs. Vapor Permeation Through ymer Films, Polymer Letters, 1: 289-293.

Tait, E.J., 1978. Factors Affecting the Usage of Insecticides and Fungicides on Fruit and Vegetable Crops in Great Britain: I. Crop-specific Factors. II. Farmer-specific Factors, Journal of Environmental Management, 6(2): 143-151.

Thomas, N.T., J. Spencer, and B.T. Davis, 1976. A Comparison of Reactions to Industrial Protective Clothing, Ann Occup Hyg, 19(3): 259-268, Dec.

Urry, F.M., J.W. Southwick, H. Hilden, L. Thomas, and J. Baxter, 1978. Effectiveness of Chlorine Bleach in Removal of Selected Pesticides from Two Work Clothing Fabrics. Final Report. Work Unit E-24 of the US EPA, Utah Epidemiologic Studies Project, Contract No. 68-01-3264, Apr.

US EPA, 1974. Farm Workers Dealing with Pesticides. Federal Register, 39(48) 9457-9462, March 11.

US EPA, 1974. Worker Protection Standards for Agricultural Pesticides. Federal Register, 39(92): 16888-16891, May 10.

US EPA, 1976. Pesticide Use Observations in Kent County, Delaware, June 2-7, 1976. Office of Enforcement, National Enforcement Investigators Center, Denve

Walker, E.A., M. Castegnaro, L. Garren, B. Pignatelli, 1978. Limitations to the Protective Effects of Rubber Gloves for Handling Nitrosamines in Environm Aspects of N-Nitroso Compounds, E.A. Walker, Ed., Lyon, p 535-543. R.ROOM. 33

Warren, M.C., J.P. Conrad, J.J. Bocain, and M. Hayes, 1963. Clothing Borne Epidemic, Journal of the American Medical Association, 184: 266-268.

Weeks, Jr., R.W., and B.J. Dean, 1977. Permeation of Methanolic Aromatic Ami Solutions Through Commercially Available Glove Materials, American Industrial Hygiene Association Journal, 38: 721-725.

Weeks, Jr., R.W., and M.J. McLeod, 1980. Permeation of Protective Garment Material by Liquid Benzene. Los Alamos Scientific Laboratory and US ERDA, Final Draft.

Weeks, Jr., R.W., and M.J. McLeod, 1981. Permeation of Protective Garment Materials by Liquid Halogenated Ethanes and a Polychlorinated Biphenyl, US DHHS, PHS, CDC, NIOSH. DHHS (NIOSH) Publication No. 81-110, Jan.

Williams, J.R., 1979. Permeation of Glove Materials by Physiologically Harmful Chemicals, American Industrial Hygiene Association Journal, 40: 877-8

Williams, J.R., 1980. Chemical Permeation of Protective Clothing, American Industrial Hygiene Association Journal, 41(12): 884-887, Dec.

Wolfe, H.R., 1972. Protection of Individuals Who Mix or Apply Pesticides in the Field. From Proceedings of the National Conference on Protective Clothing and Safety Equipment for Pesticide Workers, Federal Working Group on Pest Management, p 35-39, May.

Wolfe, H.R., 1973. Workers Should Be Protected From Pesticide Exposure, Weeds, Trees and Turf, 12(4): 12, Apr.

Wolfe, H.R., 1976. Field Exposure to Airborne Pesticides in Air Pollution from Pesticides and Agricultural Processes, R.E. Lee, Jr., Ed., Chapt. 5, p 137-161, CRC Press, Inc., Cleveland.

Wolfe, H.R., 1968. Safe Use of Pesticides as Related to Human Health. Chapt. 111. In Washington Pesticides Application Handbook, Washington State Dept. of Agriculture, Olympia, p 14-18, Sept.

Wolfe, H.R., J.F. Armstrong, D.C. Staiff, and S.W. Comer, 1972. The Use of Protective Clothing and Equipment for Prevention of Exposure to Pesticides. From Proceedings of the National Conference on Protective Clothing and Safety Equipment for Pesticide Workers, Federal Working Group on Pest Management, p 155-164, May.

Wolfe, H.R., D.C. Staiff, and J.F. Armstrong, 1978. Exposure of Pesticide Formulating Plant Workers to Parathion, Bulletin of Environmental Contamination and Toxicology, 20: 340-343.

World Health Organization, 1977. Engineering Aspects of Vector Control Operations. First Report of the WHO Expert Committee on Vector Biology and Control. Technical Report Series, World Health Organization, No. 603.

Weig, G., J.D. Adams, and J. Blondell, 1980. Minimizing Occupational Exposure to Pesticides: Federal Reentry Standards for Farm Workers (Present and Proposed), Residue Reviews, 75: 103-112.

T DOCUMENTATION PAGE	1. REPORT NO. EPA 560/5-85-006	2.	3. Recipient's Accession No.
ıd Subtitle .hods for Assessing Exposure to Chemical Substances - olume 6: Methods for Assessing Occupational Exposure to Chemical Substances			5. Report Date 8/85 6.
s) L. Schultz, G. Dixon, S. Nacht, C. Carpenter, W. Christie ıtos, J. DiClementi, J. Doria, W. Palmer, S. Sullivan, P.Wood			8. Performing Organization Rept. No.
ıing Organization Name and Address rsar Inc. 50 Versar Center ringfield, Virginia 22151			10. Project/Task/Work Unit No. Task 41 11. Contract(C) or Grant(G) No. (C)EPA 68-02-3968 (G)
›ring Organization Name and Address ited States Environmental Protection Agency fice of Toxic Substances posure Evaluation Division shington, D.C. 20460			13. Type of Report & Period Covered Final Report 14.

mentary Notes

A Project Officer was Michael A. Callahan
A Task Manager was L. Greg Schweer and Stephen H. Nacht

t (Limit: 200 words)

This report, one of a series of reports concerning exposure assessment, describes ›ds and catalogs informations sources for estimating exposure to chemical substances ıe occupational environment. The report provides specific guidance for conducting ⁄arious component analyses of an occupational exposure assessment. It details ›aches used to identify chemical manufacturing, processing, and use locations, and ıetermining the chemical processes used. The types of monitoring data useful in ›ational exposure assessments are addressed, as are relevant QA/QC considerations. ıass balance approach to estimating workplace contaminant concentrations in the ıce of pertinent monitoring data is detailed, as are methods for evaluating contami- transport and transformation in the workplace, and attendant worker exposure path- Procedures for identifying, characterizing, and enumerating exposed worker popu- ıns are outlined, and methods are provided for calculating the level of exposure ex- ›nced by each population. The report concludes by providing two appendices. The . details the exposure potential associated with a number of major industrial pro- ›s, while the second identifies a large number of information sources useful in con- ng occupational exposure assessments.

ıt Analysis a. Descriptors

iers/Open-Ended Terms

sure Assessment/Occupational
c Substances/Occupational

I Field/Group

y Statement	19. Security Class (This Report)	21. No. of Pages
ribution Unlimited	Unclassified	383
	20. Security Class (This Page) Unclassified	22. Price

18) See Instructions on Reverse

OPTIONAL FORM 272 (4-77)
(Formerly NTIS-35)
Department of Commerce

U.S. Environmental Protection Agency
Region 5, Library (PL-12J)
77 West Jackson Boulevard, 12th Floor
Chicago, IL 60604-3590