EPA-540-R-02-502

United States Environmental Protection Agency

SITE Technology Capsule

MatCon™ Modified Asphalt for Waste Containment

Abstract

As part of the Superfund Innovative Technology Evaluation (SITE) Program, the U.S. Environmental Protection Agency (EPA) evaluated the use of a proprietary asphalt mixture as a cover for hazardous waste landfills or other land disposal sites. Wilder Construction Company (WCC), the firm that developed the asphalt mixture called MatCon™, claims that its asphalt has a permeability of about 1×10^{-8} centimeters per second (cm/sec) and is flexible enough that it does not crack under the small amounts of differential settlement typically encountered in hazardous waste landfills. Potential sites for application of this technology include hazardous waste sites that are relatively level and have a firm base. The use of MatCon™ asphalt as a site cover allows reuse of the site for public recreation or light industrial purposes.

Two MatCon™ asphalt covers have recently been installed for evaluation at two sites. The primary evaluation site is the Lindane Source Area (LSA) in the west management unit of Dover Air Force Base (DAFB) in Dover, Delaware. The second evaluation site is the Tri-County Landfill (TCL), located in Elgin, Illinois.

A pilot-scale MatCon™ cover (0.35 acre) was installed at the DAFB site in April 1999 together with an adjacent conventional asphalt cover for comparative testing. Samples of both the MatCon™ and conventional asphalt covers were obtained in August 1999 for extensive laboratory testing. A 3.6-acre MatCon™ cover was installed at the TCL site in November 1999, and samples were obtained immediately following installation for laboratory permeability testing.

Preliminary laboratory testing results indicate that the permeability of the MatCon™ cover at the DAFB site is less than 1.0×10^{-8} cm/sec, whereas the permeability of the adjacent conventional asphalt cover is between 2.7×10^{-4} cm/sec and 1.0×10^{-5} cm/sec. Flexural tests of samples of the MatCon™ and the conventional asphalt covers indicate that the MatCon™ cover tolerates three times more deflection without cracking compared to the conventional asphalt cover. Field hydrologic data obtained to date at the DAFB and TCL sites indicate average field permeabilities of about 2.3×10^{-8} cm/sec and 5.0×10^{-8} cm/sec, respectively. Complete data from the field permeability testing are available in the Technology Evaluation Report.

SITE
SUPERFUND INNOVATIVE TECHNOLOGY EVALUATION

U.S. Environmental Protection Agency
Region 5, Library (PL-12J)
77 West Jackson Boulevard, 12th Floor
Chicago, IL 60604-3590

Recycled/Recyclable
Printed with vegetable-based ink on paper that contains a minimum of 50% post-consumer fiber content processed chlorine free

Introduction

The SITE Program was established in 1986 to accelerate the development, evaluation, and use of innovative technologies that offer permanent cleanup alternatives for hazardous waste sites. One component of the SITE Program is the Demonstration Program, under which engineering, performance, and cost data are developed for innovative technologies. Data developed under the SITE Demonstration Program enable potential users to evaluate each technology's applicability to specific waste sites.

MatCon™ is an asphalt mixture produced by using a proprietary binder and a specified aggregate gradation in a conventional hot-mix asphalt plant. WCC claims that MatCon™ asphalt is much less permeable and possesses superior flexural strength compared to conventional asphalt. WCC specifically claims that MatCon™ asphalt has a permeability of 1.0×10^{-8} cm/sec or less, which exceeds the requirement of less than 1.0×10^{-7} cm/sec established for Resource Conservation and Recovery Act (RCRA) Subtitle C hazardous waste landfill covers (Title 40 of the Code of Federal Regulations, Section 264.301).

The two primary objectives of the SITE Program evaluation of the MatCon™ technology were to compare (1) the in-field permeability of the MatCon™ cover to the RCRA requirement of less than 1.0×10^{-7} cm/sec, and (2) the permeability and flexural properties of MatCon™ asphalt to those of conventional hot-mix asphalt. Secondary objectives of the evaluation were to (1) compare various laboratory-measured physical characteristics (including load capacity/deformation, shear strength, joint permeability, and aging and degradation characteristics) of MatCon™ asphalt to those of conventional asphalt covers; (2) assess the field performance of the MatCon™ cover under extreme weather conditions and vehicle loads; (3) estimate a cumulative hydrologic balance for the MatCon™ cover at the DAFB site; and (4) estimate the costs of MatCon™ cover installation.

Dover Air Force Base Site

WCC installed a pilot-scale cover system at the DAFB site in April 1999 for purposes of evaluating the MatCon™ technology. The evaluation cover measures approximately 124 by 220 feet and consists of three sections: (1) 12-inch-thick MatCon™ asphalt with a drainage layer (Section I), (2) 4-inch-thick MatCon™ asphalt (Section II), and (3) 4-inch-thick conventional asphalt (Section III). The drainage layer in Section I was constructed as a 4-inch-thick channel of open-graded asphalt between two 4-inch-thick MatCon™ layers, as shown in Figures 1 and 2. The purpose of this drainage layer was to collect and allow measurement of the water that infiltrated through the top 4 inches of the cover. The purpose of constructing both conventional asphalt and MatCon™ sections was to allow a direct comparison of the physical properties of each type of asphalt based on laboratory testing of cover samples.

To monitor infiltration, the four 3-inch-diameter polyvinyl chloride pipes leading from the drainage layer in Section I were connected to a 10-inch-diameter sump, as shown in Figure 1. During the field evaluation, the volume of infiltration water collected in the sump was monitored during rainfall events, and Darcy's Law was used to estimate the in-field permeability of the MatCon™ cover.

To monitor surface runoff, a lined ditch was constructed downgradient from the cover, and berms were constructed to direct the runoff from Section I of the cover into the drainage ditch. Surface runoff was measured continuously with a flow meter, which recorded both instantaneous and cumulative flow.

Tri-County Landfill Site

WCC installed a 3.6-acre MatCon™ cover at the TCL site in Elgin, Illinois during November 1999. A plan view of the test section of the cover is shown in Figure 3. The drainage system underneath the test section incorporates an intermediate gravel layer underlain by an impermeable geomembrane, as shown in Figure 4. This configuration was requested by the U.S. Army Corps of Engineers, the agency providing oversight of the TCL closure.

A sump was installed at the edge of the MatCon™ cover at this site to collect the drainage from the gravel layer. The sump is similar in construction to that installed at the Dover site and was used to

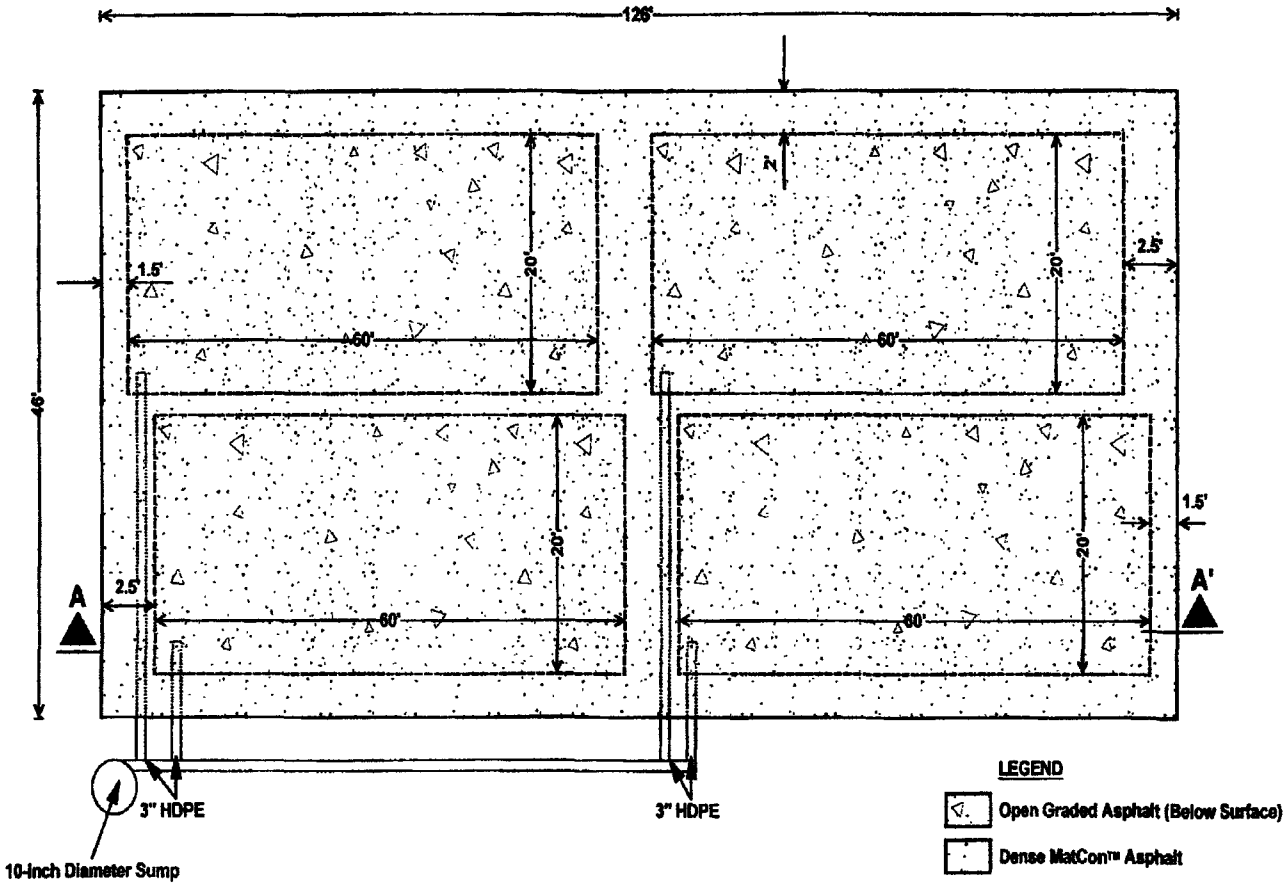

Figure 1. Plan view of Section 1 of the evaluation cover system at Dover Air Force Base.

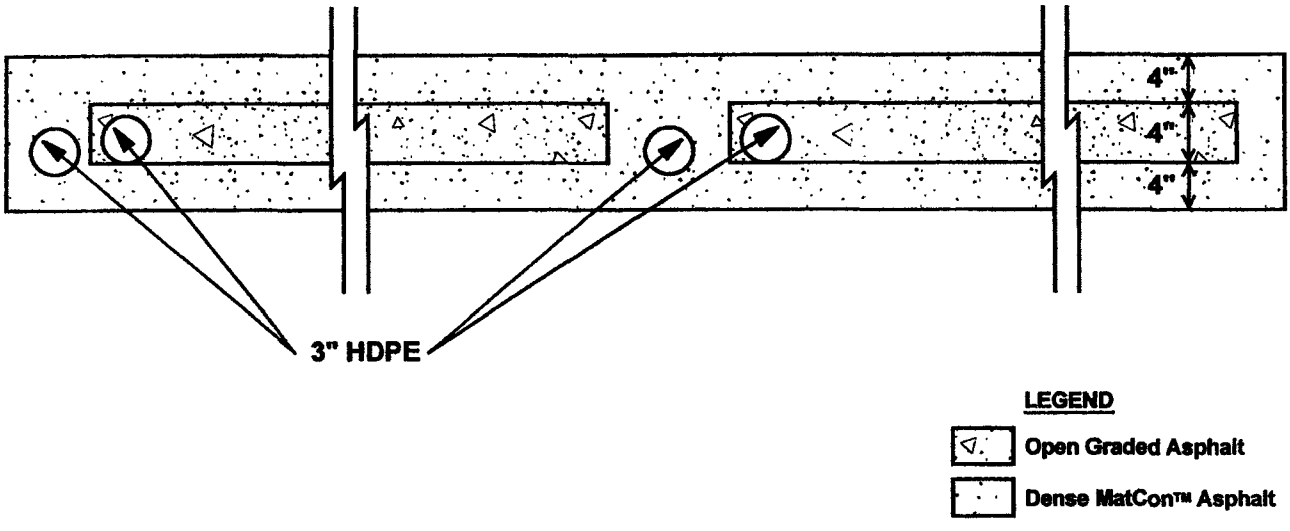

Figure 2. Section A - A' (from Figure 1) showing infiltration collection system at Dover Air Force Base.

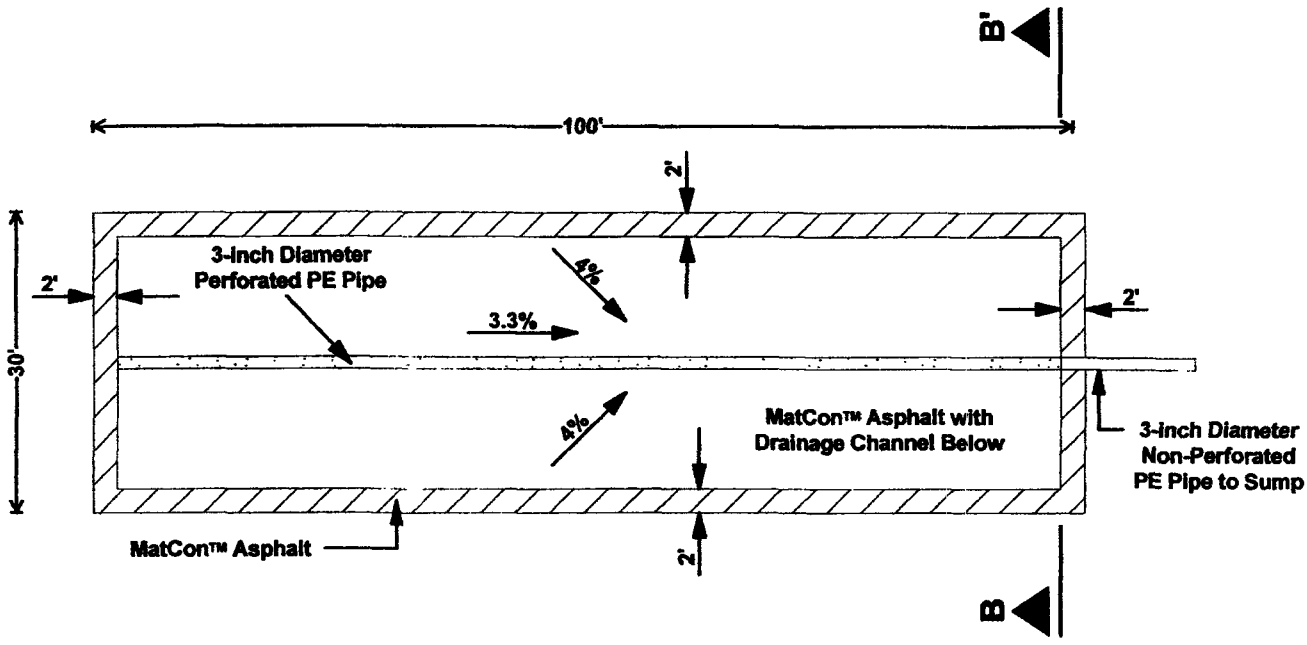

Figure 3. Plan view of the test section of the cover system at Tri-County Landfill.

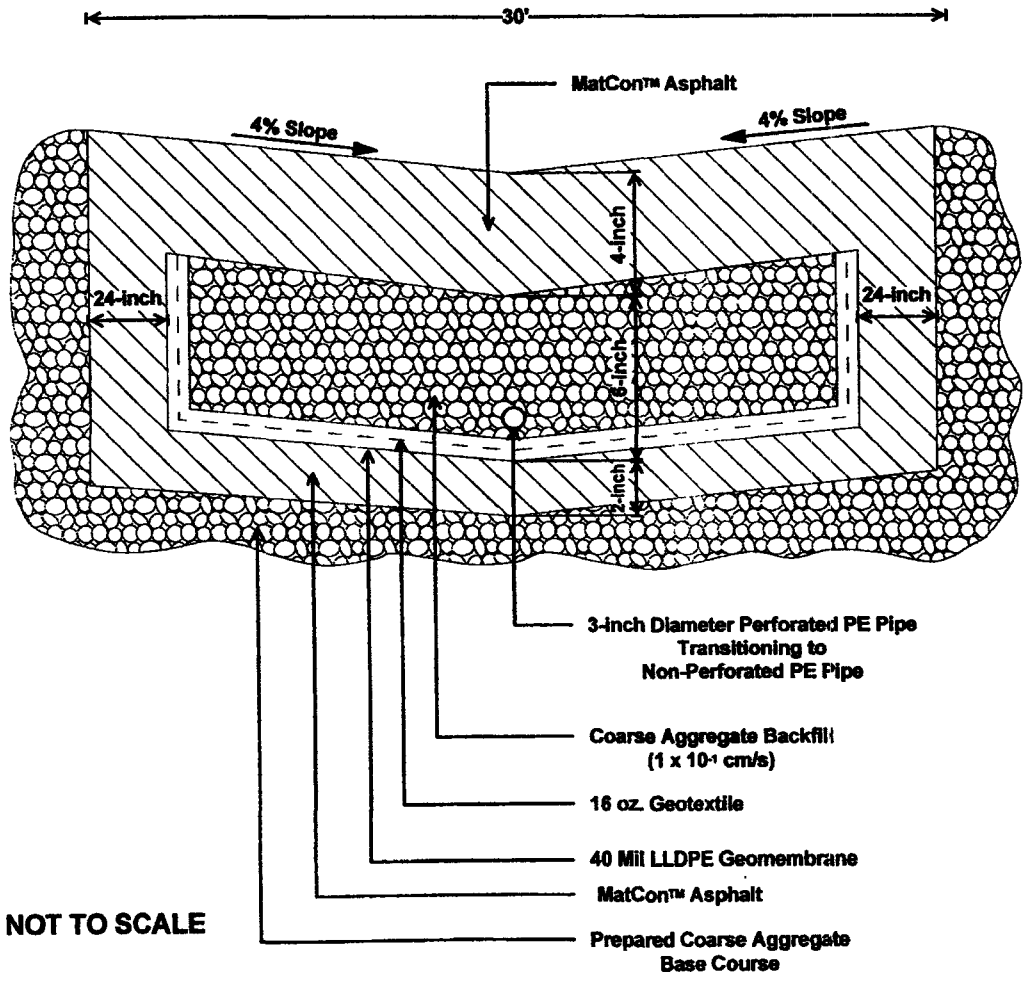

Figure 4. Section B - B' (from Figure 3) showing infiltration collection system at Tri-County Landfill.

assess the volume of infiltration water. However, a system for collection and measurement of surface runoff was not installed at this site.

Evaluation Results

Both MatCon™ and conventional asphalt cover core samples were obtained from the DAFB site in August 1999; these samples were subjected to extensive laboratory testing of physical properties. On November 8, 1999, eight core samples were obtained from the MatCon™ cover at the TCL site in areas adjacent to the test section; these samples were subjected to permeability testing for purposes of comparison to the testing results for the DAFB site samples.

This section summarizes the results of the laboratory testing of the cover samples and of in-field observations as they relate to the primary and secondary objectives. Field permeability data and the hydrologic balance for the MatCon™ cover at the Dover site will be available in July 2000.

Comparison With RCRA Requirements

Field permeability tests on the 12-inch-thick MatCon™ cover at DAFB site and the MatCon™ cover at the TCL site show that the permeability is between 1.28×10^{-7} and 5.15×10^{-10} cm/sec. This permeability is up to three orders of magnitude better than the RCRA requirement for Subtitle C landfill covers of 1.0×10^{-7} cm/sec.

Comparison with Conventional Asphalt - Permeability and Flexure

Laboratory test results for the MatCon™ and conventional asphalt covers are presented in Table 1. The permeability of the conventional asphalt cover samples ranged from 2.7×10^{-4} cm/sec to 1.0×10^{-5} cm/sec, whereas all the MatCon™ samples showed permeabilities of less than 1.0×10^{-8} cm/sec.

The flexural properties of the conventional asphalt and the MatCon™ covers were measured using a special test developed for this evaluation. The test measures the flexural properties under simulated differential settlement using a 40-inch-long by 4-inch-square slab sample. The sample sags under its own weight when it is subjected to differential settlement by removing the sand supporting the slab through an aperture about mid-point along the sample length. The sand is removed over a 30-day period in incremental, predetermined quantities. The flexural tests of the MatCon™ cover samples indicate that a 36-inch beam showed 20.41 mm of deflection without cracking, whereas conventional asphalt cracked with 7.2 mm of deflection. Further, the MatCon™ cover sample did not show any cracks after 30 days, whereas the conventional asphalt sample had cracks up to 3 mm wide and 2.5 cm long at 31.25 mm of deflection.

Comparison with Conventional Asphalt Performance

Other physical properties that were measured to compare conventional and MatCon™ asphalt covers included the following:

- Joint integrity
- Load capacity and deformation
- Tensile strength
- Thermal crack resistance
- Aging and degradation
- Void space

Table 1 summarizes the properties obtained for MatCon™ and conventional asphalt.

Field Performance of MatCon™ Under Extreme Weather Conditions

The field performance of MatCon™ under freeze-thaw and vehicle loads was evaluated at the TCL site. Since installation in November 1999, several snow storms occurred at the TCL site. In early March, a thawing period of about 1 week was followed by cold weather and a snow storm.

Because the cover could not be completed in 1 day, it was necessary to complete "cold joints" after the edges of the daily applications cooled overnight. It is often difficult to bond and compact the asphalt properly at a cold joint. Poor workmanship at these cold joints caused raveling, or separation of aggregate particles, from the edge and surface of the compacted asphalt during cold weather. A surficial crack was found at one location on the MatCon™ cover. WCC repaired the crack by routing the joint, cleaning the joint using a hot air lance,

Table 1. Comparison of Average Physical Properties of MatCon™ and Conventional Asphalt Covers

Property	Test Method	MatCon™	Conventional Asphalt
Hydraulic Permeability (cm/sec)	ASTM D-5084	$< 1.0 \times 10^{-8}$	2.7×10^{-4} to 1.0×10^{-5}
Flexural Properties at Center of Beam	New Method[1]	20.41 No cracking	31.25[2] (3-mm-wide, 2.5-cm-long cracks)
Joint Integrity	ASTM D-5084	5.47×10^{-5}	1.04×10^{-4}
Load Capacity and Deformation at -20°C (MegaPascals)	ASTM D-4123	2048	3200
Tensile Strength at -20°C (MegaPascals)	AASHTO TP-9	3.55	2.58
Thermal Crack Resistance at -30°C (MegaPascals)	AASHTO TP-10	3.60	2.70
Accelerated Weathering (60 days) (cm/sec)	ASTM D-5084	2.2×10^{-6}	3.15×10^{-4}
Fuel Resistance (Depth of Penetration, cm)	ASTM 1856	1.5	5.5
Void Space (%)	ASTM D-3203	1.53	10.53
Hydraulic Transmissivity (drainage layer only) (cm/sec)	ASTM D-5084	8.94×10^{-3}	--

Notes:

[1] Method developed by Ronald Terrel of WCC
[2] Cracking was initiated at 7.2 mm of deflection
AASHTO American Association of State Highway and Transportation Officials
ASTM American Society for Testing and Materials

and extruding it full of hot modified asphalt mastic joint sealer. Permeability measured from the sample obtained from the location containing the crack was 3.56×10^{-5} cm/sec, demonstrating the critical importance of quality assurance and quality control (QA/QC) in installing the MatCon™ cover. The QA/QC requirements for MatCon™ cover installation will be detailed in the Innovative Technology Evaluation Report (ITER).

The other areas of the 3.6-acre MatCon™ cover appear to be performing well under the heavy vehicle loads. Heavy trucks from Waste Management's recycling fleet have been operating on the MatCon™ cover since it was installed. The trucks are parked on the MatCon™ cover, and the cover is performing well under oil leaks from the trucks.

Cost Estimate for MatCon™ Covers

The MatCon™ cover installation involves the mixing of the proprietary binder along with aggregates in an asphalt plant, placing the asphalt mixture on the prepared surface, and compacting it. The costs provided by WCC per acre of MatCon™ cover are summarized below.

Aggregates	$10,000
MatCon™ Binder	$77,000
Mix Preparation	$9,000
Transport to Site	$8,000
Lay and Compact Mixture	$16,000
Permitting	$2,000
Site Preparation	$10,000
Total	$120,000

This cost compares favorably with the cost per acre for RCRA Subtitle C covers, which range from $150,000 to $300,000 per acre, depending on local availability of appropriate soil cover materials.

Comparison to Superfund Feasibility Study Evaluation Criteria

Table 2 summarizes the MatCon™ cover performance compared to the Superfund feasibility study evaluation criteria. This table is provided to assist Superfund decision-makers in considering the MatCon™ cover for remediation at hazardous waste sites.

Technology Status

The MatCon™ technology is commercially available, and WCC has been discussing with several site owners the potential application of the technology. The MatCon™ technology is being specifically considered for several other landfill closures. In 2003, MatCon™ covers over landfills in Beaumont, Texas and Albuquerque, New Mexico may be evaluated under the SITE program.

Technology Applicability

The MatCon™ technology is applicable as a final cover at many hazardous waste sites. A MatCon™ cover can be constructed within a few days using conventional asphalt paving equipment. Maintenance of the cover is relatively easy, using conventional asphalt paving repair equipment and materials. The potential for hazardous waste site reuse is a major advantage of this technology. Uses being planned for the MatCon™ cover include the following: staging area for heavy equipment and vehicles; light industrial manufacturing; and sports facilities, such as tennis courts and tracks.

Limitations

The technology is difficult to implement at waste sites that are steep and have an unstable surface because the MatCon™ cover requires a firm subgrade for placement of the cover. Waste sites must have slopes less then 3:1 for the safe use of compacting and paving equipment.

Sources of Further Information

Future field data from the hydrologic monitoring at the DAFB and TCL sites will be used to continue the evaluation of in-field permeability of the cover. Observations at the TCL site will continue to provide data on field performance of the MatCon™ cover under extreme weather conditions and heavy vehicle loads.

Further details regarding the technology are available from the following sources:

David Carson
U.S. Environmental Protection Agency
ORD/NRMRL
5995 Center Hill Avenue
Cincinnati, OH 45224
Phone: 513-569-7527
Fax: 513-569-7879
carson.david@epamail.epa.gov

Karl Yost
Wilder Construction Company
1525 E. Marine View Drive
Everett, WA 98201
Phone: 425-551-3100
Fax: 425-551-3116
karlyost@wilderconstruction.com

Table 2. Superfund Feasibility Evaluation Criteria for the MatCon™ Technology

Criterion		Discussion
Overall protection of human health and the environment	1.	The MatCon™ technology is expected to protect human health by containing the hazardous waste. It affords environmental protection by preventing the formation of leachate at hazardous waste landfills.
Compliance with applicable or relevant and appropriate requirements (ARAR)	2.	The MatCon™ technology complies with the EPA permeability requirement of 10^{-5} cm/sec for landfill covers that do not have bottom geomembrane layers. It also complies with the state and local ARARs.
Long-term effectiveness and permanence	3.	According to WCC, the MatCon™ cover can be a permanent containment system requiring limited routine maintenance.
Reduction of toxicity, mobility, or volume through treatment	4.	The technology reduces the mobility of contaminants by minimizing the entry of water into the waste.
Short-term effectiveness	5.	The technology can be implemented expeditiously and is effective in reducing water infiltration into the waste.
Implementability	6.	The technology is readily implementable since hot-mix plants are available in all parts of the country. Standard, readily available paving equipment can be used to construct the MatCon™ cover. The technology uses natural materials (aggregates and petroleum products) that are used extensively in the construction industry.
Cost	7.	The cost is comparable to RCRA Subtitle C clay and geosynthetic covers.
State acceptance	8.	State acceptance of the technology is likely because of the redevelopment possibilities with a MatCon™ cover. Illinois, Texas, California, and Florida have accepted this cover.
Community acceptance	9.	Community acceptance of the technology is likely because of the redevelopment possibilities with a MatCon™ cover.