United States
Environmental Protection
Agency

Office of Solid Waste and
Emergency Response
Washington DC 20460

Office of Research and
Development
Washington DC 20460

Superfund

EPA/540/5-90/006 Nov 1990

EPA

The Superfund Innovative Technology Evaluation Program:

Technology Profiles

SITE

SUPERFUND INNOVATIVE
TECHNOLOGY EVALUATION

EPA/540/5-90/006
November 1990

TECHNOLOGY PROFILES

SITE

SUPERFUND INNOVATIVE TECHNOLOGY EVALUATION

U.S. Environmental [illegible]
[illegible]
230 S. Dearborn Street, [illegible]
Chicago, IL 60604

EPA
RISK REDUCTION ENGINEERING LABORATORY
OFFICE OF RESEARCH AND DEVELOPMENT
26 WEST MARTIN LUTHER KING DRIVE
CINCINNATI, OHIO 45268

Printed on Recycled Paper

DISCLAIMER

The development of this document has been funded by the United States Environmental Protection Agency under Contract No. 68-03-3484, Work Assignment No. 28, to PRC Environmental Management, Inc. The document has been subjected to the Agency's administrative and peer review and has been approved for publication as an EPA document. Mention of trade names or commercial products does not constitute endorsement or recommendation for use.

FOREWORD

The U.S. Environmental Protection Agency's (EPA) Risk Reduction Engineering Laboratory (RREL) is responsible for planning, implementing, and managing research, development, and demonstration programs that provide an authoritative, defensible engineering basis for EPA policies, programs, and regulations concerning drinking water, wastewater, pesticides, toxic substances, solid and hazardous wastes, and Superfund-related activities. This publication is one product of that research and provides a vital communication link between the researcher and the user community.

The Superfund Innovative Technology Evaluation (SITE) Program, now in its fifth year, is an integral part of EPA's research into alternative cleanup methods for hazardous waste sites around the nation. Through cooperative agreements with developers, innovative technologies are refined at the bench- and pilot-scale level and then demonstrated at actual sites. EPA collects and evaluates extensive performance data on each technology to use in decision-making for hazardous waste site remediation.

The success of the SITE Program can be measured by the increased interest in the technologies within the Demonstration and Emerging Technologies Program. Within the past 2 years, approximately 90 Records of Decision have specified innovative treatment technologies as part of the selected remedy. Several SITE demonstration technologies are currently being used at these Superfund sites and many more are being considered for other sites.

This document profiles 72 demonstration and emerging technologies being evaluated under the SITE Program. Recently, the developers of three emerging technologies have been invited to participate in the Demonstration Program. Each technology profile contains a description of the technology, a discussion of its applicability to various wastes, an update on its development or demonstration status, and any available demonstration results. This document is intended for environmental decision-makers and other interested individuals involved in hazardous waste site cleanups.

E. Timothy Oppelt, Director
Risk Reduction Engineering Laboratory

ABSTRACT

The Superfund Innovative Technology Evaluation (SITE) program was created to evaluate new and promising treatment technologies for cleanup at hazardous waste sites. The mission of the SITE program is to encourage the development and routine use of innovative treatment technologies at these hazardous waste sites. The goal of SITE is to provide environmental decision-maker's with new, viable treatment options that may have performance or cost advantages compared to traditional treatment technologies.

Five major activities of the component programs are to:

- Conduct and monitor demonstrations of promising innovative technologies to provide reliable performance, cost, and applicability information for future site characterization and cleanup decision-making (Demonstration Program);
- Encourage the development of emerging alternative technologies (Emerging Technologies Program);
- Develop technologies that detect, monitor, and measure hazardous and toxic substances to provide better, faster and cost effective methods for producing real-time data during site characterization and remediation (Monitoring and Measurement Technologies Program);
- Encourage private sector development of firms willing to commercialize EPA-developed technologies (Innovative Technologies Program); and
- Identify and remove impediments to the use of alternative technologies (Technology Transfer).

This document is intended as a reference guide for environmental decision-makers and others interested in the progress of technologies under the SITE Demonstration and Emerging Technologies programs. The technologies are described in technology profiles, presented in alphabetical order by developer name. This document was prepared between August 1990 and November 1990.

Each technology profile contains: (1) a technology description, (2) a discussion on waste applicability, (3) a project status report, and (4) EPA Project Manager and technology developer contacts. For completed demonstrations, the profiles also include a summary of the demonstration results and the applications analysis.

Reference tables for the SITE program participants precede the Demonstration and Emerging sections, and contain EPA and Developer contacts. Inquiries about a specific SITE technology should be directed to the EPA Project Manager and inquiries on the technology itself should be directed to the Technology Developer Contact. Both contacts are also listed in the "For Further Information" section of each technology profile.

TABLE OF CONTENTS

TITLE	PAGE
DISCLAIMER	ii
FOREWORD	iii
ABSTRACT	iv
TABLE OF CONTENTS	v
ACKNOWLEDGEMENTS	viii
PROGRAM DESCRIPTION	1
DEMONSTRATION PROGRAM	11
ALLIED SIGNAL CORPORATION	18
AMERICAN COMBUSTION TECHNOLOGIES, INC.	20
AWD TECHNOLOGIES, INC.	22
BIOTROL, INC.	24
BIOTROL, INC.	26
BIOVERSAL USA, INC.	28
CF SYSTEMS CORPORATION	30
CHEMFIX TECHNOLOGIES, INC.	32
CHEMICAL WASTE MANAGEMENT	34
DEHYDRO-TECH CORPORATION	36
E.I. DUPONT DE NEMOURS AND COMPANY OBERLIN FILTER COMPANY	38
ECOVA CORPORATION	40
EPOC WATER, INC.	42
EXCALIBUR ENTERPRISES, INC.	44
EXCAVATION TECHNIQUES AND FOAM SUPPRESSION	46
EXXON CHEMICALS, INC. & RIO LINDA CHEMICAL CO.	48
FREEZE TECHNOLOGIES CORPORATION	50
GEOSAFE CORPORATION	52
HORSEHEAD RESOURCE DEVELOPMENT CO., INC.	54
IM-TECH	56
IN-SITU FIXATION COMPANY	58
INTERNATIONAL ENVIRONMENTAL TECHNOLOGY/ YWC MIDWEST	60
INTERNATIONAL WASTE TECHNOLOGIES/GEO-CON, INC.	62
OGDEN ENVIRONMENTAL SERVICES	64

TABLE OF CONTENTS (Continued)

TITLE PAGE

QUAD ENVIRONMENTAL TECHNOLOGIES CORPORATION 66
RECYCLING SCIENCES INTERNATIONAL, INC. 68
REMEDIATION TECHNOLOGIES, INC. 70
RESOURCES CONSERVATION COMPANY 72
RETECH, INC. 74
RISK REDUCTION ENGINEERING LABORATORY 76
SANIVAN GROUP 78
S.M.W. SEIKO, INC. 80
SEPARATION AND RECOVERY SYSTEMS, INC. 82
SHIRCO INFRARED SYSTEMS 84
SILICATE TECHNOLOGY CORPORATION 86
SOLIDITECH, INC. 88
TECHTRAN, INC. 90
TERRA VAC, INC. 92
THERMAL WASTE MANAGEMENT 94
TOXIC TREATMENTS (USA) INC. 96
ULTROX INTERNATIONAL 98
WASTECH, INC. 100
ZIMPRO/PASSAVANT INC. 102

EMERGING TECHNOLOGIES PROGRAM 104

ABB ENVIRONMENTAL SERVICES, INC. 109
ALCOA SEPARATIONS TECHNOLOGY, INC. 111
ATOMIC ENERGY OF CANADA LTD. 113
BABCOCK & WILCOX CO. 115
BATTELLE MEMORIAL INSTITUTE 117
BIO-RECOVERY SYSTEMS, INC. 119
BIOTROL, INC. 121
BOLIDEN ALLIS, INC. 123
CENTER FOR HAZARDOUS MATERIALS RESEARCH 125
COLORADO SCHOOL OF MINES 127
ELECTRON BEAM RESEARCH FACILITY, FLORIDA INTERNATIONAL UNIVERSITY AND UNIVERSITY OF MIAMI 129
ELECTROKINETICS, INC. 131
ELECTRO-PURE SYSTEMS, INC. 133
ENERGY AND ENVIRONMENTAL ENGINEERING, INC. 135
ENERGY & ENVIRONMENTAL RESEARCH CORPORATION 137
ENVIRO-SCIENCES, INC. 139

TABLE OF CONTENTS (Continued)

TITLE PAGE

FERRO CORPORATION 141
HARMON ENVIRONMENTAL SERVICES, INC. 143
INSTITUTE OF GAS TECHNOLOGY 145
INSTITUTE OF GAS TECHNOLOGY 147
IT CORPORATION 149
IT CORPORATION 151
MEMBRANE TECHNOLOGY AND RESEARCH, INC. 153
MONTANA COLLEGE OF MINERAL SCIENCE TECHNOLOGY 155
NEW JERSEY INSTITUTE OF TECHNOLOGY 157
J.R. SIMPLOT COMPANY 159
TRINITY ENVIRONMENTAL TECHNOLOGIES, INC. 161
UNIVERSITY OF SOUTH CAROLINA 163
UNIVERSITY OF WASHINGTON 165
WASTEWATER TECHNOLOGY CENTER 167
WESTERN RESEARCH INSTITUTE 169

INFORMATION REQUEST FORM 171

List of Tables

TABLE 1 - COMPLETED SITE DEMONSTRATIONS AS OF NOVEMBER 1990 5

TABLE 2 - SITE DEMONSTRATION PROGRAM PARTICIPANTS 12

TABLE 3 - SITE EMERGING PROGRAM PARTICIPANTS 105

ACKNOWLEDGEMENTS

Annette Gatchett of the Risk Reduction Engineering Laboratory, Cincinnati, Ohio was the Work Assignment Manager responsible for the preparation of this document. Special acknowledgement is given to John Martin, Chief of the Demonstration Section, Norma Lewis, Chief of the Emerging Technology Section, and the individual EPA Project Managers and Technology Developers who provided guidance and technical input.

Participating in the development of this document for PRC Environmental Management, Inc. were Lisa M. Scola, Robert I. Foster, Michael J. Keefe, Jack D. Brunner, Jonathan B. Lewis, Aaron Lisec, Madeline Dec, Carol Adams, Kelly Brogan, and Laurie Gilmack.

PROGRAM DESCRIPTION

INTRODUCTION

The Superfund Amendments and Reauthorization Act of 1986 (SARA) directed the U.S. Environmental Protection Agency (EPA) to establish an "Alternative or Innovative Treatment Technology Research and Demonstration Program." In response, the EPA's Office of Solid Waste and Emergency Response and the Office of Research and Development established a formal program called the Superfund Innovative Technology Evaluation (SITE) Program, to accelerate the development and use of innovative cleanup technologies at hazardous waste sites across the country. Currently, the SITE program is administered by the Office of Research and Development's, Risk Reduction Engineering Laboratory headquartered in Cincinnati, Ohio.

The SITE Program integrates the following five component programs:

- Demonstration Program
- Emerging Technologies Program
- Measurement and Monitoring Technologies Development Program
- Innovative Technologies Program
- Technology Transfer Program

The Technology Profiles document is a product of the Technology Transfer Program. This document mainly focuses on the Demonstration and Emerging Technologies Programs, both of which are designed to assist private developers in commercializing alternative technologies for site remediation. Figure 1 depicts the process of technology development from initial concept to commercial use, and shows the interrelationship between these two programs.

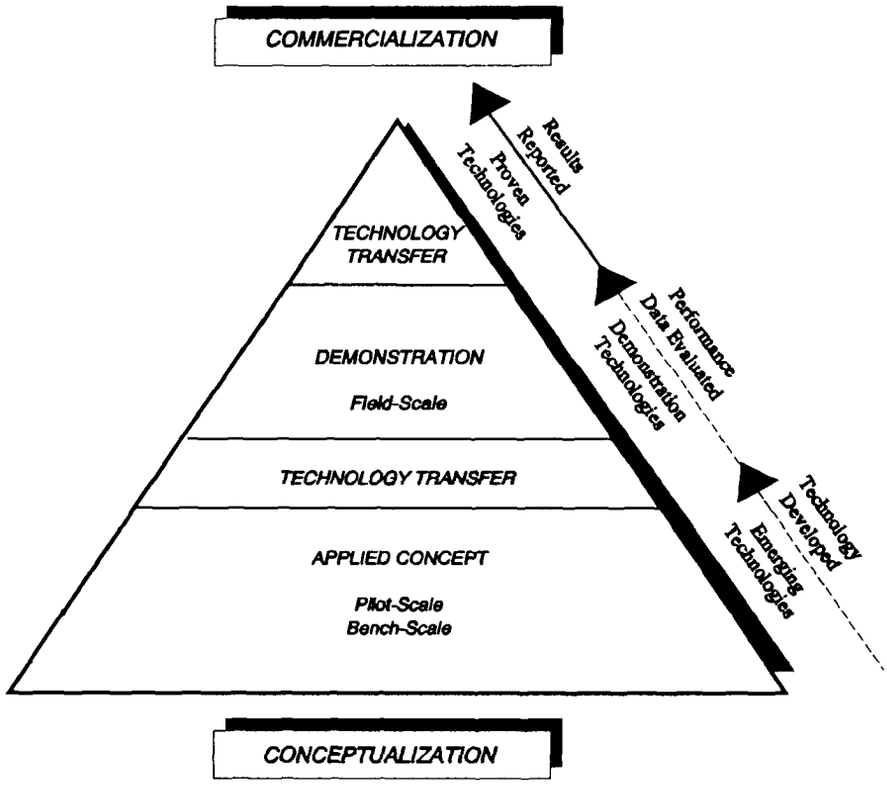

Figure 1. Development of Alternative and Innovative Technologies

Before a technology can be accepted into the Emerging Technologies Program, sufficient data must be available to validate its basic concepts. Once it is accepted into the program, the technology is subjected to a combination of bench- and pilot-scale testing under controlled conditions. The technology's performance is documented and a report is prepared.

If bench and pilot test results are encouraging, the technology may be accepted into the Demonstration Program. In the Demonstration Program, the technology is field-tested on hazardous waste materials. Engineering and cost data are gathered to assess whether or not the technology is applicable for site clean-up. The Technology Evaluation Report (TER) presents demonstration data such as testing procedures, data collected, and quality assurance/quality control standards.

A second report, called the Applications Analysis Report (AAR), is prepared to evaluate all available information on the specific technology and analyze its overall applicability to other site characteristics, waste types, and waste matrices. As part of the formal SITE Technology Transfer Program, these reports, as well as videos, bulletins, and project summaries are prepared. This information is distributed to the user community to provide reliable technical data for environmental decision-making, and to promote the technology's commercial use.

Currently there are 31 technologies participating in the Emerging Technologies Program and are divided into the following categories: thermal (4), physical and chemical (19), solidification/stabilization (1), and biological (7). These projects vary from electroacoustical decontamination to bench- and pilot-scale studies of a laser-stimulated photochemical oxidation process. Figure 2 displays the breakdown, by percentage, of technologies in the Emerging Program.

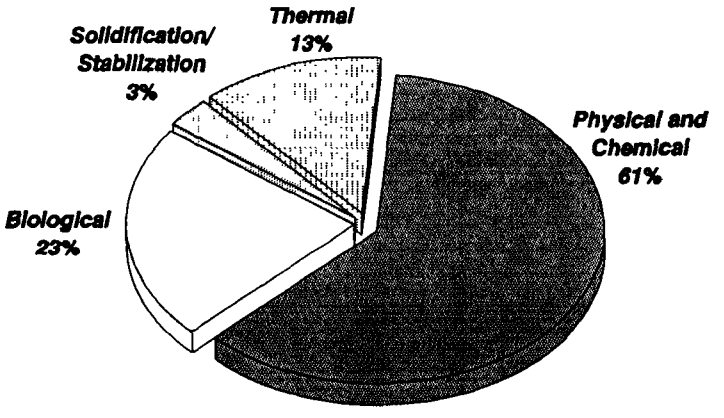

Figure 2. Innovative Technologies in the Emerging Program

The Demonstration Program has 42 active developers providing 45 demonstrations. The projects are divided into the following categories: thermal (9), biological (8), physical and chemical (19), solidification/stabilization (8), and radioactive waste treatment (1). Several of these

technologies involve combinations of these treatment categories. Figure 3 shows the breakdown, by percentage, of technologies currently in the Demonstration Program.

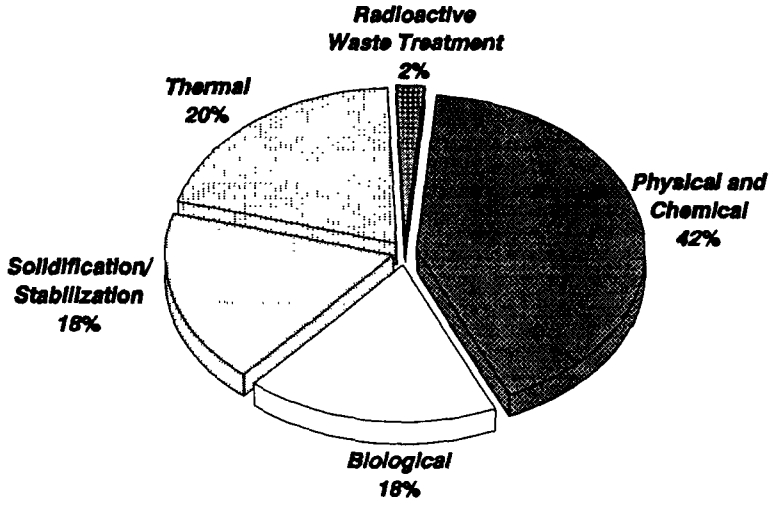

Figure 3. Innovative Technologies in the Demonstration Program

To date, 18 technology demonstrations have been completed; several reports have been published and others are in various stages of production. Table 1 lists these demonstrations, in chronological order, along with information on the technology transfer opportunities for the project.

OTHER SITE PROGRAMS

Technology Transfer Program

In this program, technical information on technologies is exchanged through various activities that support the SITE Program. Data results and status updates from the Demonstration and Emerging Technologies Programs are disseminated to increase awareness of alternative technologies available for use at Superfund sites. The goal of technology transfer activities is to develop interactive communication among individuals requiring up-to-date technical information.

The Technology Transfer Program reaches the environmental community through many media, including:

- SITE brochures, publications, reports, videos and fact sheets
- Pre-proposal conferences on SITE solicitations
- Public meetings and on-site visitors' days
- Seminar series
- SITE exhibit displayed at nationwide conferences
- Innovative technologies program exhibition
- Networking through forums, associations, centers of excellence, regions, and states

- Technical assistance to regions, states, and remediation cleanup contractors
- On-line information clearinghouses such as: OSWER Electronic Bulletin Board System (BBS) [help line: 301/589-8368]; Alternative Treatment Technology Information Center (ATTIC) [System operator: 301/816-9153]; and the Technology Information Exchange (TIX)/Computer On-line Information System (COLIS).

Measurement and Monitoring Technologies Development Program

This program explores new and innovative technologies for assessing the nature and extent of contamination as well as evaluating cleanup levels at Superfund sites. Effective measurement and monitoring technologies are needed to: (1) accurately assess the degree of contamination at a site; (2) provide data and information to determine impacts to public health and the environment; (3) supply data to help select the most appropriate remedial action; and (4) monitor the success/failure of a selected remedy. To date, the program has focused on two major research areas -- immunoassays for toxic substances and fiber optic sensing for in-situ analysis.

The objectives of this program are to:

- Identify existing technologies that can enhance field monitoring and site characterization;
- Support the development of monitoring capabilities that current technologies cannot address in a cost-effective manner;
- Demonstrate technologies that emerge from the screening and development phases of the program; and
- Prepare protocols, guidelines, and standard operating procedures for new methods.

Several measuring and monitoring technologies were demonstrated in Fiscal Year (FY) 1990. Technologies demonstrated include a mobile mass spectrometer, on-site ion mobility spectrometry, transient electromagnetic methods, and immunoassay field kits for chemical identification.

The purpose of the mobile mass spectrometer (MSS) demonstration was to evaluate the technology for on-site detection of polychlorinated biphenyls (PCBs), volatile organic compounds (VOCs), and polynuclear aromatic hydrocarbons (PAHs) in soil and water samples. The technology was developed by Bruker Instruments, Inc. of Billerica, MA. Two Superfund sites in Region 1 were selected for the MSS demonstration: (1) the Re-Solve, Inc. facility in North Dartmouth, MA; and (2) the Westborough Township site in Westborough, MA. The MSS was used to analyze VOCs in water and PCBs in soil samples from the Re-Solve site and PAHs in samples from Westborough. Demonstration results will be published in FY 1991.

Although four ion mobility spectrometry developers were identified as potential candidates for SITE demonstrations, no systems were engineered for full-scale environmental monitoring applications. However, two developers chose to participate in laboratory-based pilot demonstrations using samples supplied by the Environmental Monitoring Systems Laboratory (EMSL). Results from the laboratory demonstrations are expected in early FY 1991.

The transient electromagnetic method (TEM) is a novel method to identify and map conductive bodies in the subsurface (e.g., buried drums and metal-contaminated plumes). The EMSL entered into an Interagency Agreement with the U.S. Department of Energy's Lawrence Berkeley Laboratory to evaluate the performance and applicability of TEM at hazardous waste sites. The work plan for the project is complete; results are anticipated by the end of FY 1992.

In 1989, RREL administered two demonstrations of MMTP-sponsored immunoassay chemical identification methods. The success of those demonstrations led to the selection of an immunoassay field kit for measuring benzene, toluene, and xylene (BTX) concentrations in water. This field kit was to be a candidate for a 1990 SITE demonstration. However, the demonstration was postponed until FY 1991 when a joint demonstration can be pursued with RREL and a private developer.

The MMTP is also responsible for planning and coordinating the Second International Symposium on Field Screening Methods for Hazardous Wastes and Toxic Chemicals scheduled for February 12-14, 1991 in Las Vegas, Nevada. For further information, contact Eric Koglin at (702) 798-2432.

Innovative Technologies Program

The aim of this program is to encourage private sector development and commercialization of EPA-developed technologies for use at Superfund sites. The Innovative Technologies Program is an outgrowth of early research and development efforts for on-site destruction and cleanup of hazardous wastes. The Federal Technology Transfer Act of 1986 authorized the EPA/industry partnership that is necessary to bring these technologies to commercialization. It reduced the marketing risk in commercializing these technologies and accelerated their development.

There are currently seven technologies in the Innovative Technologies Program. During 1990, a mobile debris washing system* was demonstrated in Hopkinsville, Kentucky and Chickamuga, Georgia. For further information on this technology demonstration, contact Naomi Barkley at (513) 569-7854.

---

* This project is profiled in the Demonstration Program under "Risk Reduction Engineering Laboratory.

TABLE 1

COMPLETED SITE DEMONSTRATIONS AS OF NOVEMBER 1990

DEVELOPER	TECHNOLOGY	SITE LOCATION	VISITOR'S DAY	TECHNOLOGY EVALUATION REPORT	APPLICATIONS ANALYSIS REPORT	REGIONAL CONTACT	PROFILE PAGE NO.
AWD Technologies Inc. San Francisco, CA (September 1990)	Integrated Vapor Extraction and Steam Vacuum Stripping	San Fernando Valley Ground-Water Basin Superfund Site in Burbank, CA	September 20, 1990	In preparation	In preparation	Alisa Greene EPA ORD 415/744-1890	22
Excavation Techniques -- Not Specific to a Developer (June and July 1990)	Excavation Techniques and Foam Suppression	McColl Superfund Site in Fullerton, CA	Not applicable	In preparation	In preparation	S. Jackson Hubbard EPA ORD 513/569-7507	46
E.I. DuPont de Nemours and Co., Newark, DE/ Oberlin Filter Co., Waukesha, WI (April 1990)	Membrane Microfiltration	Palmerton Zinc Superfund Site in Palmerton, PA	April 10, 1990	In preparation	In preparation	Tony Koller EPA Region III 215/597-6906	38
Risk Reduction Engineering Lab (December 1989)	Debris Washing	Superfund Sites in Detroit, MI; Hopkinsville, KY; and Walker County, GA	Not applicable	In preparation	In preparation	Naomi Barkley EPA ORD 513/569-7854	76
BioTrol, Inc., Chaska, MN (September 1989)	Soil Washing	MacGillis & Gibbs Superfund Site in New Brighton, MN	September 27, 1989	In preparation	In preparation	Rhonda McBride EPA Region V 312/886-7242	26
Toxic Treatment USA (September 1989)	In-Situ Steam/Air Stripping	Annex Terminal, San Pedro, CA	September 7, 1989	In preparation	In preparation	Paul dePercin EPA ORD 513/569-7797	96
BioTrol, Inc., Chaska, MN (July 1989)	Biological Aqueous Treatment	MacGillis & Gibbs Superfund Site in New Brighton, MN	September 27, 1989	In preparation	In preparation	Rhonda McBride EPA Region V 312/886-7242	24

TABLE 1 (Continued)

COMPLETED SITE DEMONSTRATIONS AS OF NOVEMBER 1990

DEVELOPER	TECHNOLOGY	SITE LOCATION	VISITOR'S DAY	TECHNOLOGY EVALUATION REPORT	APPLICATIONS ANALYSIS REPORT	REGIONAL CONTACT	PROFILE PAGE NO.
Ogden Environmental Services San Diego, CA (March 1989)	Circulating Fluidized Bed Combuster	Ogden's Facility in La Jolla, CA	Not applicable	In preparation	Not applicable	John Blevins EPA Region IX 415/744-2241	64
Chemfix Technologies, Inc. Metairie, LA (March 1989)	Chemical Fixation/ Stabilization	Portland Equipment Salvage Company in Clackamas, OR	March 15, 1989	In preparation	In preparation	John Sainsburg EPA Region X 206/442-1196	32
Ultrox International, Inc., Santa Ana, CA (March 1989)	Ultraviolet Radiation, Hydrogen Peroxide, and Ozone	Lorentz Barrel and Drum Company in San Jose, CA	March 8, 1989	SITE Program Demonstration of the Ultrox International Ultraviolet Radiation/Oxidation Technology, EPA/540/5-89/012, September 1989	In preparation	Joseph Healy EPA Region IX 415/974-8011	98
Soliditech, Inc., Houston, TX (December 1988)	Solidification/ Stabilization	Imperial Oil Company/Champion Chemicals Superfund site in Morganville, Monmouth County, NJ	December 7, 1988	SITE Program Demonstration Test - Soliditech, Inc. Solidification/Stabilization Process, EPA/540/5-89/005, September 1989	In preparation	Trevor Anderson EPA Region II 212/264-5391	88
CF Systems Corporation, Waltham, MA (September 1988)	Solvent Extraction	New Bedford Harbor Superfund Site in Massachusetts	August 26 - 27, 1988	SITE Program Demonstration Test - CF Systems Corporation Solvent Extraction, EPA/540/5-90/002, May 1990	Applications Analysis Report: SITE Program, CF Systems Organics Extraction System, New Bedford, MA, EPA/540/A5-90/002, May 1990	David Lederer EPA Region I 617/573-9665	30

TABLE 1 (Continued)

COMPLETED SITE DEMONSTRATIONS AS OF NOVEMBER 1990

DEVELOPER	TECHNOLOGY	SITE LOCATION	VISITOR'S DAY	TECHNOLOGY EVALUATION REPORT	APPLICATIONS ANALYSIS REPORT	REGIONAL CONTACT	PROFILE PAGE NO.
International Waste Technologies, Wichita, KS/GeoCon, Inc., Pittsburgh, PA (May 1988)	In-Situ Stabilization/ Solidification	General Electric Service Shop in Hialeah, FL	April 14, 1988	Technology Evaluation Report, SITE Demonstration Program, International Waste Technologies In Situ Stabilization/ Solidification, Hialeah, Florida, EPA/540/5-89/004a, August 1989	Applications Analysis Report: International Waste Tech/ Geo-Con, Inc. In-Situ Stabilization/ Solidification, EPA/540/A5-89/004, August 1989	James Orban Region IV 404/347-2643	62
Terra Vac, Inc., San Juan, Puerto Rico (December 1987 through April 1988)	In Situ Vacuum Extraction	Groveland Wells Superfund Site, Valley Manufactured Product	January 15, 1988	SITE Program Demonstration Test Terra Vac In Situ Vacuum Extraction System, Groveland, Massachusetts, EPA/540/5-89/003a, April 1989	Terra Vac In Situ Vacuum Extraction System, EPA/540/A5-89/003, July 1989	Robert Leger EPA Region I 617/573-5734	92
American Combustion Technologies, Inc., Norcross, GA (January 1988)	Pyretron Thermal Destruction	EPA's Combustion Research Facility in Jefferson, AK Soil from Stringfellow Acid Pit Superfund Site in California	Demonstration conducted from November 16, 1987 to January 29, 1988	SITE Program Demonstration Test: The American Combustion Pyretron Thermal Destruction System at the U.S. EPA's Combustion Research Facility, EPA/540/5-89/008, April 1989	American Combustion Pyretron Destruction System: Applications Analysis Report, EPA/540/A5-89/008, April 1989	Laurel Staley EPA ORD, Cincinnati 513/569-7863	20

TABLE 1 (Continued)

COMPLETED SITE DEMONSTRATIONS AS OF NOVEMBER 1990

DEVELOPER	TECHNOLOGY	SITE LOCATION	VISITOR'S DAY	TECHNOLOGY EVALUATION REPORT	APPLICATIONS ANALYSIS REPORT	REGIONAL CONTACT	PROFILE PAGE NO.
Shirco Infrared Systems, Carollton, TX (November 1987)	Infrared Thermal Destruction	Rose Township Superfund Site, Oakland County, MI	November 4, 1987	SITE Program Demonstration Test, Shirco Pilot-Scale Infrared Incineration System at the Rose Township Demode Road Superfund Site, EPA/540/5-89/007a, Vol. 1, April 1989	Shirco Infrared Incineration System, EPA 540/A5-89/007, June 1989	Kevin Adler EPA Region V 312/886-7078	84
IM-Tech (formerly Hazcon, Inc.), Oakwood, TX (October 1987)	Solidification/ Stabilization	Douglassville Superfund Site, Berks County, near Reading, PA	October 14, 1987	SITE Program Demonstration Test, HAZCON Solidification, Douglassville, PA, EPA 540/5-89/001a, Vol. 1, May 1989	HAZCON Solidification Process, Douglassville, Pennsylvania, EPA/540/A5-89/001, May 1989	Victor Janosik EPA Region III 215/597-8996	56
Shirco Infrared Systems, Carollton, TX (September 1987)	Infrared Thermal Destruction	Peak Oil Superfund Site in Brandon, FL	Demonstration conducted July 31 - August 5, 1987	SITE Program Demonstration Test, Shirco Infrared Incineration System, Peak Oil, Brandon, Florida, September 1988, EPA 540/5-88/002a	Shirco Infrared Incineration System, EPA/540/A5-89/010, June 1989	Fred Stroud EPA Region IV 404/347-3931	84

The technical reports listed above may be obtained by calling the Center for Environmental Research Information (CERI) in Cincinnati, Ohio at 513-569-7562. If you would like to be placed on the SITE mailing list, write to:

ORD Publications
26 West Martin Luther King Drive (G72)
Cincinnati, Ohio 45268

SITE PROGRAM CONTACTS

The SITE Program is administered by EPA's Office of Research and Development (ORD). For further information on the SITE Program in general, or its component programs, contact:

SITE Program

Robert A. Olexsey, Director
Superfund Technology Demonstration Division
513-569-7861 (FTS: 684-7861)

Stephen C. James, Chief
SITE Demonstration and Evaluation Branch
513-569-7696 (FTS: 684-7696)

Demonstration Program

John Martin, Chief
Demonstration Section
513-569-7758 (FTS: 684-7758)

Emerging Technologies Program

Norma Lewis, Chief
Emerging Technology Section
513-569-7665 (FTS: 684-7665)

U.S. Environmental Protection Agency
26 West Martin Luther King Drive
Cincinnati, OH 45268

Measurement and Monitoring Program

Eric Koglin
Environmental Monitoring Systems Laboratory
U.S. EPA
P.O. Box 93478
Las Vegas, NV 89193-3478
702-798-2432 (FTS: 545-2432)

DEMONSTRATION PROGRAM

The objective of the SITE Demonstration Program is to develop reliable engineering performance and cost data on innovative, alternative technologies, so that potential users can evaluate each technology's applicability for a specific waste site. Demonstrations are conducted at hazardous waste sites (usually Superfund sites) or under conditions that closely simulate actual wastes and conditions.

Data collected during a demonstration are used to assess the performance of the technology, the potential need for pre- and post-processing of the waste, applicable types of wastes and media, potential operating problems, and the approximate capital and operating costs. Demonstration data can also provide insight into long-term operating and maintenance costs and long-term risks.

Technologies are selected for the SITE Demonstration Program through annual requests for proposals (RFPs). Proposals are reviewed by EPA to determine the technologies with promise for use at hazardous waste sites. In addition, several technologies have entered the program on a fast-track basis. These technologies were primarily ongoing Superfund projects in which innovative techniques of broad interest were identified for evaluation under the program.

Cooperative agreements between EPA and the developer set forth responsibilities for conducting the demonstration and evaluating the technology. Developers are responsible for operating their innovative systems at a selected site, and are expected to pay the costs to transport equipment to the site, operate the equipment on-site during the demonstration, and remove the equipment from the site. EPA is responsible for project planning, sampling and analysis, quality assurance and quality control, preparing reports, and disseminating information. If the developer is unable to obtain financing elsewhere, EPA may consider bearing a greater portion of the total project cost.

To date, five solicitations have been completed -- SITE 001 in 1986 through SITE 005 in 1990. The RFP for SITE 006 will be issued in January 1991. The program has 42 active participants (45 projects), including several fast-track projects, presented in alphabetical order in Table 2 and in the technology profiles that follow.

TABLE 2

SITE Demonstration Program Participants

Developer	Technology	Technology Contact	EPA Project Manager	Waste Media	Applicable Waste	
					Inorganic	Organic
Allied Signal Corporation [formerly Detox, Inc.] Morristown, NY (003)	Submerged Aerobic Fixed-Film Reactor	David Allen 201-455-5595	Ronald Lewis 513-569-7856 FTS 684-7856	Ground Water, Wastewater	Certaom Metals Inhibit the Process	Readily Biodegradable Organic Compounds
American Combustion Technologies, Inc. Norcross, GA (001)	Pyretron Oxygen Burner	Gregory Gitman 404-662-8156	Laurel Staley 513-569-7863 FTS 684-7863	Soil, Sludge, Solid Waste	NA	Non-specific
AWD Technologies, Inc. San Francisco, CA (004)	Integrated Vapor Extraction and Steam Vacuum Stripping	David Bluestein 415-876-1504	Norma Lewis/ Gordon Evans 513-569-7665/ 513-569-7684	Ground Water, Soil	NA	Volatile Organic Compounds
Biotrol, Inc. Chaska, MN (003)	Biological Aqueous Treatment System	John Sheldon 612-448-2515	Mary Stinson 908-321-6683 FTS 340-6683	Liquid Waste, Ground Water	Nitrates	Chlorinated and Nonchlorinated Hydrocarbons, Pesticides
Biotrol, Inc. Chaska, MN (003)	Soil Washing System	John Sheldon 612-448-2515	Mary Stinson 908-321-6683 FTS 340-6683	Soil	Metals	High Molecular Weight Organics, PAHs, PCP, PCBs, and Pesticides
BioVersal USA, Inc. Mount Prospect, IL (005)	BioGenesis Process for Extraction of Hydrocarbons	Mohsen C. Amiran 708-228-7316	Diana Guzmán 513-569-7819 FTS 684-7819	Soil	NA	Volatile and Nonvolatile Hydrocarbons
CF Systems Corporation Waltham, MA (002)	Solvent Extraction	Chris Shallice 617-890-1200	Laurel Staley 513-569-7863 FTS 684-7863	Soil, Sludge, Wastewater	NA	PCBs, Volatile, and Semivolatile Organics, Petroleum Byproducts

NA = Non Applicable

TABLE 2 (Continued)

SITE Demonstration Program Participants

Developer	Technology	Technology Contact	EPA Project Manager	Waste Media	Applicable Waste	
					Inorganic	Organic
Chemfix Technologies, Inc. Metairie, LA (002)	Solidification/Stabilization	Philip Baldwin 504-831-3600	Edwin Barth 513-569-7669 FTS 684-7669	Soil, Sludge, Solids, Waste, Electroplating Wastes	Heavy Metals	High Molecular Weight Organics
Chemical Waste Management, Inc. Geneva, IL (003)	X*TRAX™ Low-Temperature Thermal Desorption	Carl Swanstrom 708-513-4578	Paul dePercin 513-569-7797 FTS 684-7797	Soil, Sludge, Other Solids	NA	Volatile and Semivolatile Organics, PCBs
Dehydro-Tech Corporation East Hanover, NJ (004)	Carver-Greenfield Process for Extraction of Oily Waste	Thomas Holcombe 201-887-2182	Laurel Staley 513-569-7863 FTS 684-7863	Soil, Sludge	NA	PCBs, Dioxin, Oil-Soluble Organics
E.I. Du Pont de Nemours and Co./Oberlin Filter Co. Newark, DE (003)	Membrane Microfiltration	Ernest Mayer 302-366-3652	John Martin 513-569-7758 FTS 684-7758	Ground Water, Leachate, Wastewater, Electroplating Rinsewaters	Heavy Metals, Cyanide, Uranium	Non-specific
Ecova Corporation Redmond, WA (003)	In-Situ Biological Treatment	Michael Nelson 206-883-1900	Naomi Barkley 513-569-7854 FTS 684-7854	Water, Soil, Sludge, Sediment	NA	Chlorinated and Nonchlorinated Organic
EPOC Water, Inc. Fresno, CA (004)	Precipitation and Microfiltration, and Sludge Dewatering	Ray Groves 209-291-8144	S. Jackson Hubbard 513-569-7507 FTS 684-7507	Sludge, Wastewater, Leachable Soil	Heavy Metals	Pesticides, Oil, and Grease
Excalibur Enterprises, Inc. New York, NY (004)	Soil Washing/Catalytic Ozone Oxidation	Lucas Boeve 212-484-2699	Norma Lewis 513-569-7665 FTS 684-7665	Soil, Sludge, Leachate, Ground Water	Cyanide	Semivolatiles, Pesticides, PCBs, PCP, Dioxin

NA = Non Applicable

TABLE 2 (Continued)

SITE Demonstration Program Participants

Developer	Technology	Technology Contact	EPA Project Manager	Waste Media	Applicable Waste	
					Inorganic	Organic
Excavation Techniques -- Not Specific to a Developer	Excavation Techniques and Foam Supression Methods	Dick Gerstle 513-782-4700	S. Jackson Hubbard 513-569-7507 FTS 684-7507	Soil	Volatile Inorganics	Volatile Organics
Exxon Chemicals, Inc./ Rio Linda Chemical Co. Long Beach, CA (004) [2 Demonstrations]	Chemical Oxidation/Cyanide Destruction	Tony Kurpakus 213-597-1937	Teri Shearer 513-569-7949 FTS 684-7949	Ground Water, Wastewater, Leachate	Cyanide	Non-specific
Freeze Technologies Corp. Raleigh, NC (003)	Freezing Separation	James A. Heist 919-850-0600	S. Jackson Hubbard 513-569-7507 FTS 684-7507	Liquids	Non-specific	Non-specific
GeoSafe Corporation Kirkland, WA (002)	In-Situ Vitrification	James Hansen 206-822-4000	Teri Shearer 513-569-7949 FTS 684-7949	Soil, Sludge	Non-specific	Non-specific
Horsehead Resources Development Co., Inc. Monaca, PA (004)	Flame Reactor	John Pusater 412-773-2279	Donald Oberacker 513-569-7510 FTS 684-7510	Soil, Sludge, Industrial Solid Residues	Metals	NA
IM-Tech [formerly Hazcon, Inc.] Oakwood, TX (001)	Solidification/Stabilization	Ray Funderburk 800-227-6543	Paul dePercin 513-569-7797 FTS 684-7797	Soil, Sludge	Heavy Metals	Non-specific
In-Situ Fixation Co. Chandler, AZ (005)	In-situ Bioremediation	Richard P. Murray 602-821-0409	Edward J. Opatken 513-569-7855 FTS 684-7855	Soil, Sludge	NA	Biodegradable Organics

NA = Non Applicable

TABLE 2 (Continued)

SITE Demonstration Program Participants

Developer	Technology	Technology Contact	EPA Project Manager	Waste Media	Applicable Waste	
					Inorganic	Organic
International Environmental Technology/YWC Midwest North Canton, OH (005)	Geolock/Bio-drain Treatment	Lynn D. Sherman 216-499-8181	Randy Parker 513-569-7271 FTS 684-7271	Soil	NA	Most
International Waste Technologies/Geo-Con, Inc. Wichita, KS (001)	In-Situ Solidification/ Stabilization	Jeff Newton 316-269-2660 Brian Jasperse 412-856-7700	Mary Stinson 908-321-6683 FTS 340-6683	Soil, Sediment	Non-specific	PCBs, PCP, Other Non-specific Organic Compounds
Ogden Environmental Services San Diego, CA (001)	Circulating Fluidized Bed Combustor	Harold Diot 619-455-2613	Joseph McSorley 919-541-2920 FTS 629-2920	Soil, Sludge, Slurry	NA	Halogenated and Nonhalogenated Organic Compounds
QUAD Environmental Technologies Corp. Northbrook, IL (004)	Chemtact Gaseous Waste Treatment	Harold Rafson 312-564-5070	Ronald Lewis 513-569-7856 FTS 684-7856	Gaseous Waste Streams	Non-specific	Volatile Organics
Recycling Sciences International, Inc. Chicago IL (004)	Desorption and Vapor Extraction System	William C. Meenan 312-559-0122	Laurel Staley 513-569-7863 FTS 684-7863	Soil, Sludge, Sediment	Volatile Inorganics	Volatile and Semivolatile Organics including PCBs, PAHs, PCP, some Pesticides
Remediation Technologies, Inc. [formerly MoTec] Austin, TX (002)	Liquid/Solid Contact Digestion	Randy Kabrick 512-477-8661	Ronald Lewis 513-569-7856 FTS 684-7856	Soil, Sludge, Liquid Waste	NA	Halogenated and Nonhalogenated Organic Compounds, Pesticides
Resources Conservation Co. Bellevue, WA (001)	Solvent Extraction (BEST)	Paul McGough 206-828-2400	Edward Bates 513-569-7774 FTS 684-7774	Soil, Sludge	NA	Non-specific Organics, Oil

NA = Non Applicable

TABLE 2 (Continued)

SITE Demonstration Program Participants

Developer	Technology	Technology Contact	EPA Project Manager	Waste Media	Applicable Waste	
					Inorganic	Organic
Retech, Inc. Ukiah, CA (002)	Plasma Reactor	R.C. Eschenbach 707-462-6522	Laurel Staley 513-569-7863 FTS 684-7863	Liquids, Soil, Sludge	Metals	Non-specific
Risk Reduction Engineering Laboratory Cincinnati, OH	Debris Washing System	Michael Taylor 513-782-4801	Naomi Barkley 513-569-7854 FTS: 684-7854	Soil Debris	Non-specific	Non-specific Organics, PCBs, Pesticides
Sanivan Group Anjou, Quebec (005)	Soil Treatment with Extrasol	Peter Z. Colak 514-355-3351	Mark Meckes 513-569-7348 FTS 684-7348	Soil	NA	PCBs, PCP, PAH, MAH, Pesticides, Oils, Hydrocarbons
S.M.W. Seiko, Inc. Redwood City, CA (004)	In-Situ Solidification/ Stabilization	David Yang 415-591-9646	S. Jackson Hubbard 513-569-7507 FTS 684-7507	Soil	Metals	Semivolatile Organic Compounds
Separation and Recovery Systems, Inc. Irvine, CA (002)	Solidification/Stabilization	Joseph DeFranco 714-261-8860	Walter Grube 513-569-7798 FTS 684-7798	Sludge	Low Level Metals	Acidic Sludges with at Least 5% Hydrocarbons
Shirco Infrared Systems, Inc. Redmond, WA (001) [2 Demonstrations]	Infrared Thermal Destruction	Several Vendors (see Technology Profile)	Howard Wall 513-569-7691 FTS 684-7691	Soil, Sediment	NA	Non-specific
Silicate Technology Corp. Scottsdale, AZ (003)	Solidification/Stabilization with Silicate Compounds	Steve Pegler 602-941-1400	Edward R. Bates 513-569-7774 FTS 684-7774	Soil, Sludge, Ground Water	Metals, Cyanide, Ammonia	High Molecular Weight Organics
Soliditech, Inc. Houston, TX (002)	Solidification/Stabilization	Bill Stallworth 713-497-8558	Walter Grube 513-569-7798 FTS 684-7798	Soil, Sludge	Metals	Non-specific

NA = Non Applicable

TABLE 2 (Continued)

SITE Demonstration Program Participants

Developer	Technology	Technology Contact	EPA Project Manager	Waste Media	Applicable Waste	
					Inorganic	Organic
Techtran, Inc. Houston, TX (005)	Chemical Binding/ Precipitation and Physical Separation	Tod S. Johnson 713-896-8205	Annette Gatchett 513-569-7697 FTS 684-7697	Aqueous Solutions	Heavy Metals	Non-specific
Thermal Waste Management New Orleans, LA (005)	Production of Fossil Fuel from Petroleum-Based Sludges	George Lane 504-525-9722	Paul dePercin 513-569-7797 FTS 684-7997	Sludge	NA	Petroleum Sludge
Terra Vac, Inc. San Juan, PR (001)	In-Situ Vacuum Extraction	James Malot 809-723-9171	Mary Stinson 908-321-6683 FTS 340-6683	Soil	NA	Volatile and Semivolatile Organic Compounds
Toxic Treatments (USA) Inc. San Francisco, CA (003)	In-Situ Steam/Air Stripping	Philip La Mori 415-391-2113	Paul dePercin 513-569-7797 FTS 684-7797	Soil	NA	Volatile Organic Compounds and Hydrocarbons
Ultrox International, Inc. Santa Ana, CA (003)	Ultraviolet Radiation and Ozone Treatment	David Fletcher 714-545-5557	Norma Lewis 513-569-7665 FTS 684-7665	Ground Water, Leachate, Wastewater	NA	Halogenated Hydrocarbons, Volatile Organic Compounds, Pesticides, PCBs
Wastech, Inc. Oak Ridge, TN (004)	Solidification/Stabilization	E. Benjamin Peacock 615-483-6515	Edward Bates 513-569-7774 FTS 684-7774	Soil, Sludge, Liquid Waste	Non-specific, Radioactive	Non-specific
Zimpro/Passavant, Inc. Rothschild, WI (002)	PACT®/Wet Air Oxidation (Powdered activated carbon and biological treatment)	William Copa 715-359-7211	John Martin 513-569-7758 FTS 684-7758	Ground Water, Industrial Wastewater, Leachate	NA	Biodegradable Volatile and Semivolatile Organic Compounds

NA = Non Applicable

ALLIED SIGNAL CORPORATION
[formerly Detox, Inc.]
(Submerged Aerobic Fixed-Film Reactor)

TECHNOLOGY DESCRIPTION:

This biological treatment system relies on aerobic microbial processes to metabolize contaminants present in a liquid waste stream. The system can treat liquids containing low concentrations (<20 parts per million, ppm) of readily biodegradable materials and yield concentrations in the low parts per billion (ppb) range.

The biological treatment system consists of an above ground fixed-film reactor, supplemental nutrient storage tank and pump, sump tank with pump, cartridge filter, and final activated-carbon filter. High surface area plastic media is used to fill the reactor, and the water level within the reactor is set to cover the plastic media. Bacterial growth is attached as film to the surface of the plastic media.

The bioreactor is operated on a one-pass, continuous-flow basis, at hydraulic retention times as low as one hour. The process begins (Figure 1) when contaminated water from a well or equalization tank is pumped into the bioreactor. The influent waste stream is evenly dispersed over the reactor packing by a header-distribution system. As the waste stream passes through the reactor, the biofilm removes the biodegradable organics. An air distribution system below the plastic media supplies oxygen to the bacteria in the form of fine bubbles. An effluent water header system collects water from the bottom of the reactor after it has been treated. Water exiting the reactor is first passed through a cartridge filter, to remove any excess biological solids, followed by activated carbon treatment, to further remove any remaining organic compounds. Depending upon the effluent water discharge criteria, the cartridge and carbon filters may not be needed.

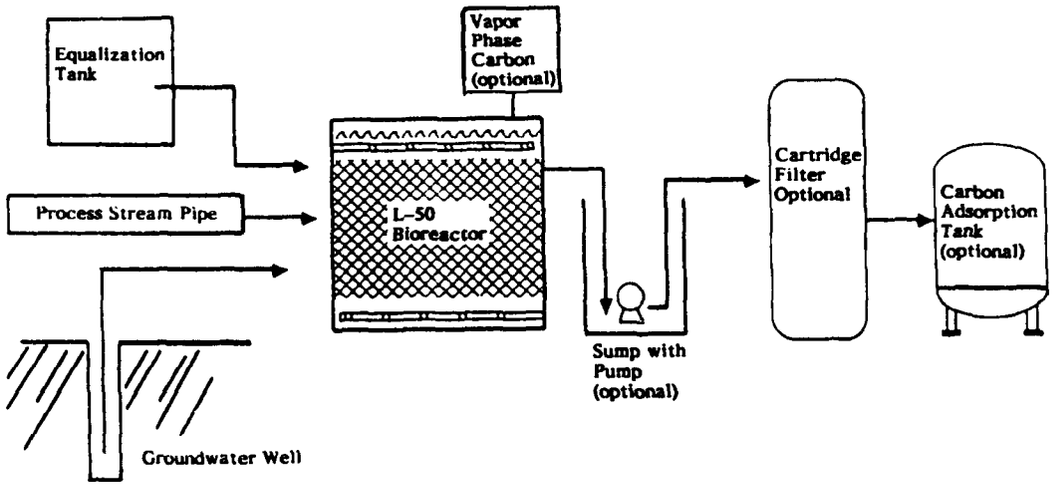

Figure 1. Proposed Detox biological treatment system.

WASTE APPLICABILITY:

This technology is typically used to treat groundwater and industrial process waters, but is also applicable to contaminanted lagoon and/or pond waters. The water to be treated must fall within a pH of 6.5 to 8.5, a temperature of 60-95°F, and be free of toxic and/or inhibitory compounds, including certain metals. Readily biodegradable compounds such as methyl ethyl ketone (MEK) and benzene can be treated, along with some organic chemicals that are initially more resistant to biodegradation, such as chlorobenzene. Halogenated compounds (such as tetrachloroethylene, trichloroethylene, and chloroform) are not readily biodegraded and cannot be treated by this system.

STATUS:

Treatability tests are being conducted to determine whether the G&H Landfill NPL site in Utica, Michigan will be suitable for the demonstration of this process. If this site is selected, the demonstration is expected to start in late Spring or Summer 1991.

FOR FURTHER INFORMATION:

EPA Project Manager:
Ronald Lewis
U.S. EPA
Risk Reduction Engineering Laboratory
26 West Martin Luther King Drive
Cincinnati, Ohio 45268
513-569-7856
FTS: 684-7856

Technology Developer Contact:
David Allen
Allied Signal Corporation
P.O. Box 1087R
Morristown, NY 07962
201-455-5595

AMERICAN COMBUSTION TECHNOLOGIES, INC.
(Pyretron® Oxygen Burner)

TECHNOLOGY DESCRIPTION:

The Pyretron® technology involves an oxygen-air-fuel burner, and uses advanced fuel injection and mixing concepts to burn wastes. Pure oxygen, in combination with air and natural gas, is burned in the Pyretron burner to destroy solid hazardous waste (Figure 1). The burner operation is computer-controlled to automatically adjust the amount of oxygen to sudden changes in the heating value of the waste.

The burner can be fitted onto any conventional combustion unit for burning liquids, solids and sludges. Solids and sludges can be co-incinerated when the burner is used in conjunction with a rotary kiln or similar equipment.

WASTE APPLICABILITY:

Solid wastes contaminated with hazardous organics are suitable for the Pyretron technology. In general, the technology is applicable to any waste that can be incinerated. The technology is not suitable for processing aqueous wastes, RCRA heavy metal wastes, or inorganic wastes.

STATUS:

A demonstration project was conducted at EPA's Combustion Research Facility in Jefferson, Arkansas, using a mixture of 40 percent contaminated soil from the Stringfellow Acid Pit Superfund site in California and 60 percent decanter tank tar sludge from coking operations (RCRA listed

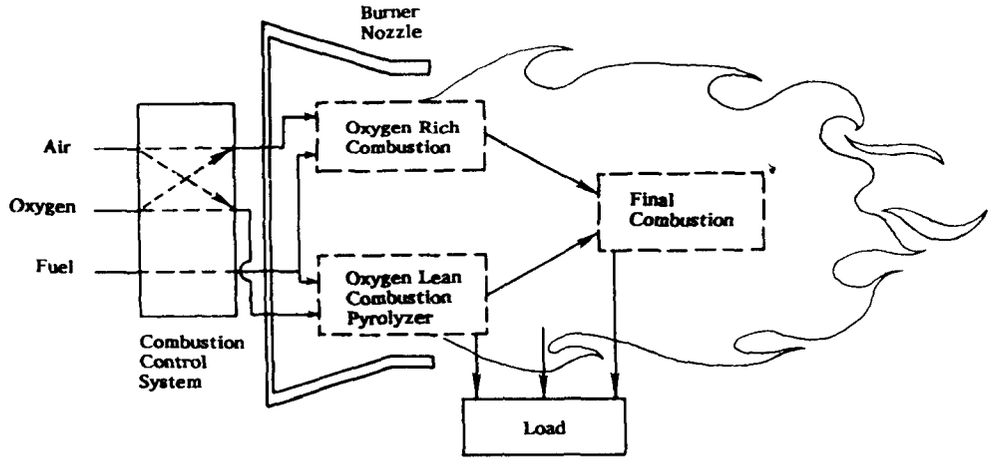

Figure 1. Pyretron combustion and heating process flow diagram.

waste K087). The demonstration began in November 1987, and was completed at the end of January 1988.

Both the Technology Evaluation Report and Application Analysis Report have been published.

DEMONSTRATION RESULTS:

Six polynuclear aromatic hydrocarbon compounds were selected as the principal organic hazardous constituents (POHC) for the test program -- naphthalene, acenaphthylene, fluorene, phenanthrene, anthracene, and fluoranthene.

The Pyretron technology achieved greater than 99.99 percent destruction and removal efficiencies (DRE) of all POHCs measured in all test runs performed.

- The Pyretron technology with oxygen enhancement achieved double the waste throughput possible with conventional incineration.
- All particulate emission levels in the scrubber system discharge were significantly below the hazardous waste incinerator performance standard of 180 mg/dscm at 7 percent oxygen.
- Solid residues were contaminant free.
- There were no significant differences in transient carbon monoxide level emissions between air-only incineration and Pyretron oxygen enhanced operation.
- Costs savings can be achieved in many situations.

APPLICATIONS ANALYSIS SUMMARY:

The field evaluations conducted under the SITE Demonstration Program yielded the following conclusions:

- The Pyretron burner system is a viable technology for treating Superfund wastes.
- The system is capable of doubling the capacity of a conventional rotary kiln incinerator. This increase is more significant for wastes with low heating values.
- In situations where particulate carryover causes operational problems, the Pyretron system may increase reliability.
- The technology can be an economical addition to an incinerator when operating and fuel costs are high and oxygen costs are relatively low.

FOR FURTHER INFORMATION:

EPA Project Manager:
Laurel Staley
U.S. EPA
Risk Reduction Engineering Laboratory
26 West Martin Luther King Drive
Cincinnati, Ohio 45268
513-569-7863
FTS: 684-7863

Technology Developer Contact:
Gregory Gitman
American Combustion Technologies, Inc.
2985 Gateway Drive, Suite 100
Norcross, Georgia 30071
404-662-8156

AWD TECHNOLOGIES, INC.
(Integrated Vapor Extraction and Steam Vacuum Stripping)

TECHNOLOGY DESCRIPTION:

The integrated AquaDetox/SVE system simultaneously treats ground water and soil contaminated with volatile organic compounds (VOCs). The integrated system consists of two basic processes: an AquaDetox moderate vacuum stripping tower that uses low-pressure steam to treat contaminated ground water; and a soil gas vapor extraction/reinjection (SVE) process to treat contaminated soil. The two processes form a closed-loop system that provides simultaneous in-situ remediation of contaminated ground water and soil with no air emissions.

AquaDetox is a high efficiency, countercurrent stripping technology developed by Dow Chemical Company. A single-stage unit will typically reduce up to 99.99 percent of VOCs from water. The SVE system uses a vacuum to treat a VOC-contaminated soil mass, inducing a flow of air through the soil and removing vapor phase VOCs with the extracted soil gas. The soil gas is then treated by carbon beds to remove additional VOCs and reinjected into the ground. The AquaDetox and SVE system (Figure 1) share a granulated activated carbon (GAC) unit. Noncondensable vapor from the AquaDetox system is combined with the vapor from the SVE compressor and decontaminated by the GAC unit. By-products of the system are a free-phase recyclable product and treated water. Mineral regenerable carbon will require disposal after approximately three years.

A key component of the closed-loop system is a vent header unit designed to collect the noncondensable gases extracted from the ground water or air that may leak into the portion of the process operating below atmospheric pressure. Further, the steam used to regenerate the carbon beds is condensed and treated in the AquaDetox system.

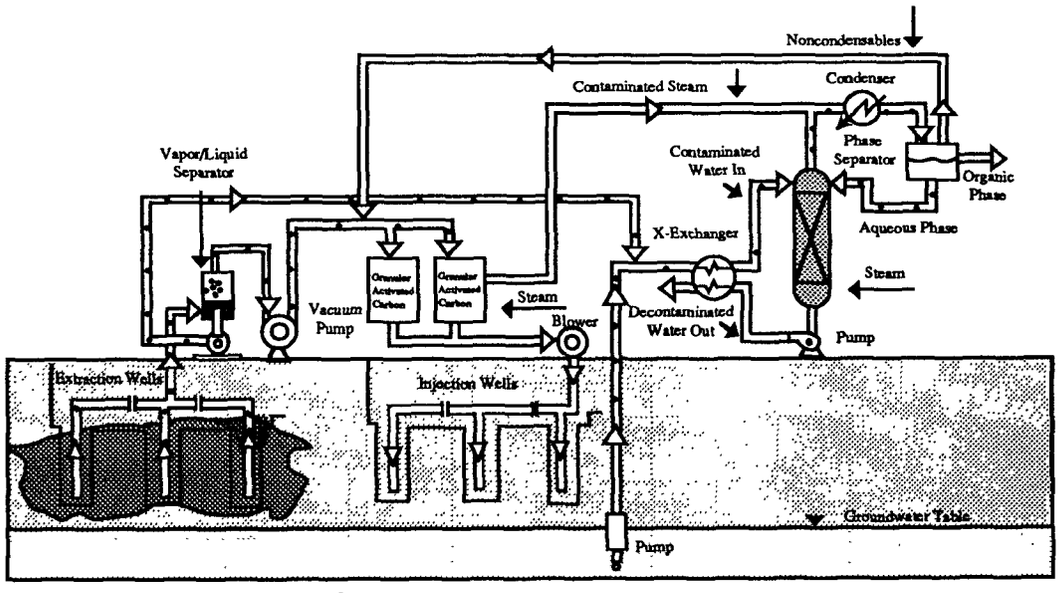

Figure 1. Zero air emissions integrated AquaDetox/SVE system.

WASTE APPLICABILITY:

This technology removes VOCs, including chlorinated hydrocarbons, in ground water and soil. Sites with contaminated ground water and soils containing trichloroethylene (TCE), perchloroethylene (PCE), and other VOCs are suitable for this on-site treatment process. AquaDetox is capable of effectively removing over 90 of the 110 volatile compounds listed in 40 CFR Part 261, Appendix VIII.

STATUS:

The AWD AquaDetox/SVE system is currently being used at the Lockheed Aeronautical Systems Company in Burbank, California. At this site, the system is treating ground water contaminated with as much as 2,200 ppb of TCE and 11,000 ppb PCE; and soil gas with a total VOC concentration of 6,000 ppm. Contaminated ground water is being treated at a rate of up to 1,200 gpm while soil gas is removed and treated at a rate of 300 cfm. The system occupies approximately 4,000 square feet.

A SITE demonstration project was evaluated as part of the ongoing remediation effort at the San Fernanco Valley Ground-Water Basin Superfund site in Burbank, California. Demonstration testing was conducted in September 1990. Demonstration results are currently being prepared and are expected to be published in early 1991.

FOR FURTHER INFORMATION:

EPA Project Managers:
Norma Lewis and Gordon Evans
U.S. EPA
Risk Reduction Engineering Laboratory
26 West Martin Luther King Drive
Cincinnati, Ohio 45268
513-569-7665 and 513-569-7684
FTS: 684-7665 and FTS: 684-7684

Technology Developer Contact:
David Bluestein
AWD Technologies, Inc.
49 Stevenson Street, Suite 600
San Francisco, California 94105
415-227-0822

BIOTROL, INC.
(Biological Aqueous Treatment System)

TECHNOLOGY DESCRIPTION:

The Biotrol Aqueous Treatment System (BATS) is a patented biological treatment system that is effective for treating contaminated ground water and process water. The system uses an amended microbial mixture; that is, a microbial population indigenous to the wastewater to which a specific microorganism has been added. This system removes the target contaminants as well as the naturally occurring background organics.

Figure 1 is a schematic of the BATS. Contaminated water enters a mix tank, where the pH is adjusted and inorganic nutrients are added. If necessary, the water is heated to an optimum temperature, using a heat exchanger to minimize energy costs. The water then flows to the reactor, where the contaminants are biodegraded.

The microorganisms, which perform the degradation, are immobilized in a three-cell, submerged, fixed-film bioreactor. Each cell is filled with a highly porous packing material

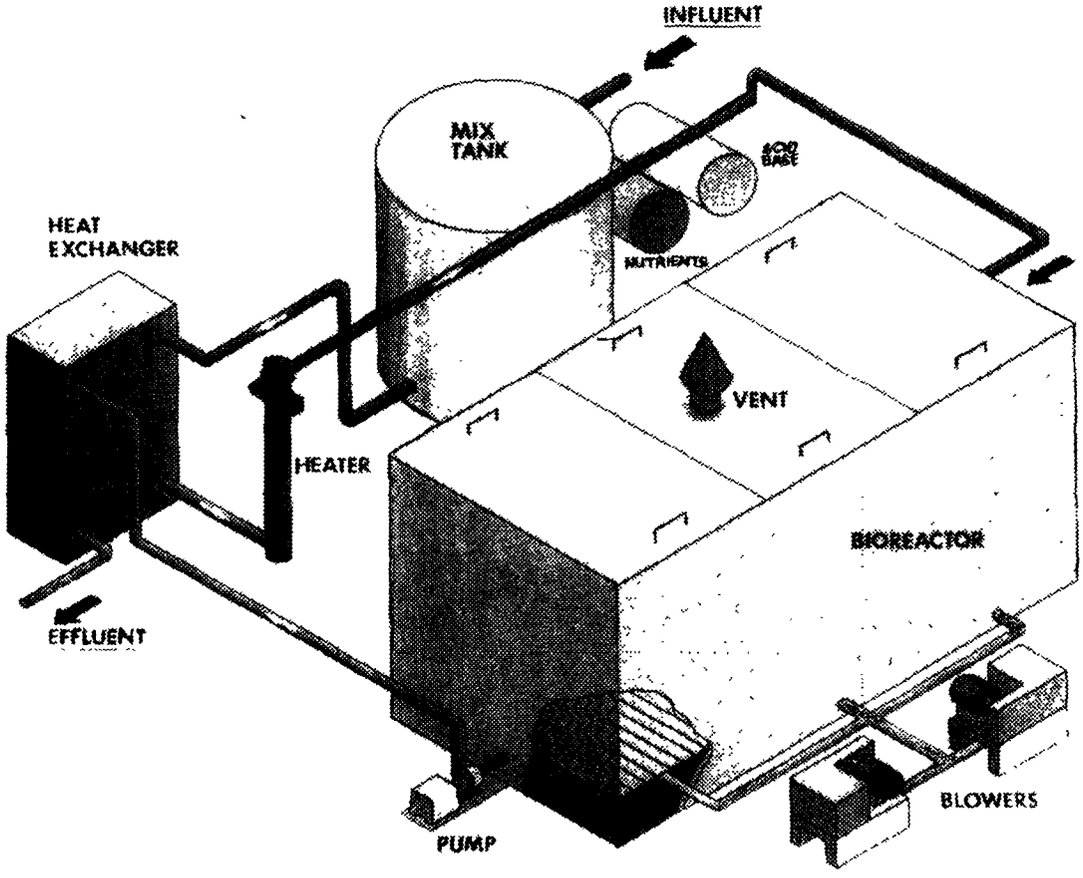

Figure 1. Bioreactor Processing System.

to which the microbes adhere. For aerobic conditions, air is supplied by fine bubble membrane diffusers mounted at the bottom of each cell. The system may also run under anaerobic conditions.

As the water flows through the bioreactor, the contaminants are degraded to carbon dioxide, water, and chloride ion. The resulting effluent may be discharged to a Publicly Owned Treatment Works (POTW) or may be reused on-site. In some cases, discharge with a NPDES permit may be possible.

WASTE APPLICABILITY:

This technology is applicable to a wide variety of wastewaters, including ground water, lagoons, and process water. Contaminants amenable to treatment include pentachlorophenol, creosote components, gasoline and fuel oil components, chlorinated hydrocarbons, phenolics, and solvents. Other potential target waste streams include coal tar residues and organic pesticides. The technology may also be effective for treating certain inorganic compounds such as nitrates; however, this application has not yet been demonstrated. The system does not treat metals.

STATUS:

In 1986-87, Biotrol performed a successful 9-month pilot field test of BATS at a wood preserving facility. Since that time, several other demonstrations and commercial installations have been completed. The SITE demonstration of the BATS technology took place from July 24 to September 1, 1989 at the MacGillis and Gibbs Superfund site in New Brighton, Minnesota. The system was operated continuously for six weeks at three different flow rates.

DEMONSTRATION RESULTS:

Results from the demonstration showed that PCP was reduced to less than 1 ppm at all flow rates. Removal percentage was as high as 97% at the lowest flow rate. The Technology Evaluation Report will be available in December 1990.

FOR FURTHER INFORMATION:

EPA Project Manager:
Mary K. Stinson
U.S. EPA
Risk Reduction Engineering Laboratory
Woodbridge Avenue
Edison, New Jersey 08837
908-321-6683
FTS: 340-6683

Technology Developer Contact:
John K. Sheldon
BioTrol, Inc.
11 Peavey Road
Chaska, Minnesota 55318
612-448-2515

BIOTROL, INC.
(Soil Washing System)

TECHNOLOGY DESCRIPTION:

The Biotrol Soil Washing System is a patented, water-based, volume reduction process for treating excavated soil. Soil washing is applicable to contaminants concentrated in the fine size fraction of soil (silt, clay, and soil organic matter) and contaminants associated with the coarse soil fraction (sand and gravel), primarily surficial. The objective of the process is to concentrate the contaminants in a smaller volume of material separate from a washed soil product. The goal is that the soil product will meet appropriate cleanup standards.

After debris is removed, soil is mixed with water and subjected to various unit operations common to the mineral processing industry. Process steps can include mixing trommels, pug mills, vibrating screens, froth flotation cells, attrition scrubbing machines, hydrocyclones, screw classifiers, and various dewatering operations.

The core of the process is a multi-stage, counter-current, intensive scrubbing circuit with interstage classification. The scrubbing action disintegrates soil aggregates, freeing contaminated fine particles from the coarser sand and gravel. In addition, surficial contamination is removed from the coarse fraction by the abrasive scouring action of the particles themselves. Contaminants may also be solubilized as dictated by solubility characteristics or partition coefficients.

The efficiency of soil washing can be improved using surfactants, detergents, chelating agents, pH adjustment, or heat. In many cases, however, water alone is insufficient to achieve the desired level of contaminant removal while minimizing cost.

The volume of material requiring additional treatment or disposal is reduced significantly by separating the washed, coarser soil components from the process water and contaminated fine particles (Figure 1).

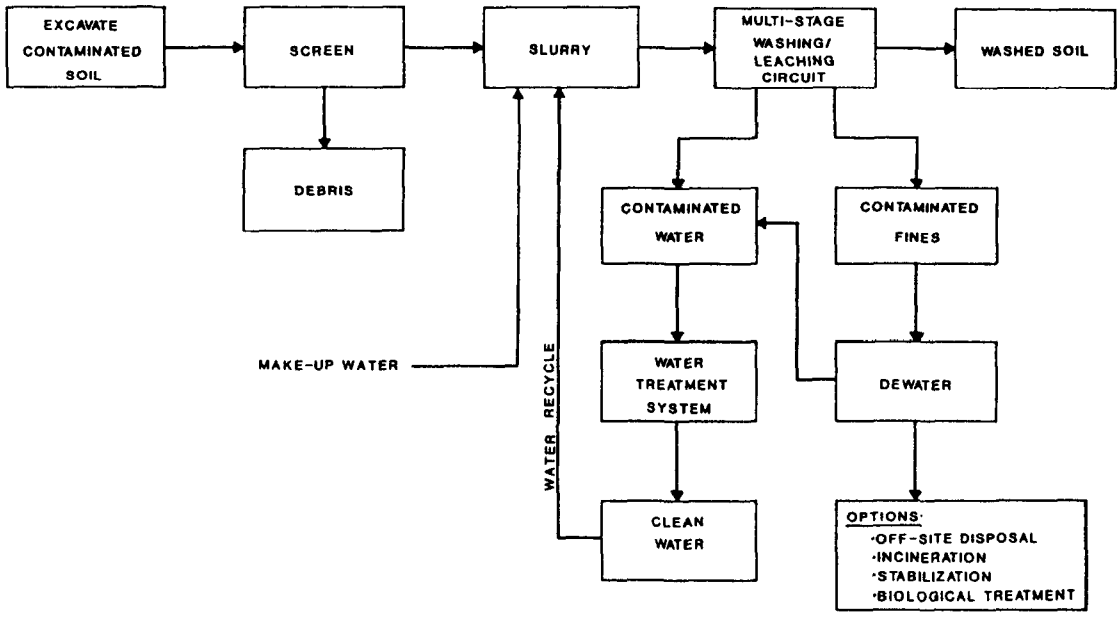

FIGURE 1. BIOTROL SOIL WASHING SYSTEM PROCESS FLOWSHEET.

The contaminated residual products can be treated by other methods. Process water is normally recycled after biological or physical treatment. Options for the contaminated fines can include off-site disposal, incineration, stabilization, or biological treatment.

WASTE APPLICABILITY:

This technology was initially developed to clean soils contaminated with wood preserving wastes such as polyaromatic hydrocarbons (PAHs) and pentachlorophenol (PCP). The technology is also applicable to soils contaminated with petroleum hydrocarbons, pesticides, polychlorinated biphenyls (PCBs), various industrial chemicals, and metals.

STATUS:

The SITE demonstration of the soil washing technology took place from September 25 to October 27, 1989 at the MacGillis & Gibbs Superfund site in New Brighton, Minnesota. A pilot-scale unit with a treatment capacity of 500 pounds per hour was operated 24 hours per day during the demonstration. Feed for the first phase of the demonstration (2 days) consisted of soil contaminated with 170 ppm PCP and 240 ppm total PAHS. During the second phase (7 days), soil containing 980 ppm PCP and 340 ppm total PAHs was fed to the system.

Contaminated process water from soil washing was treated biologically in a fixed film reactor and recycled. A portion of the contaminated fines generated during soil washing was treated biologically in a 3-stage, pilot-scale EIMCO Biolift™ reactor system supplied by the EIMCO Process Equipment Company.

Preliminary demonstration results showed that PCP levels in the washed soil were reduced by 91 to 93 percent. Biological treatment reduced PCP levels in the process water by 89 to 94 percent. Removal efficiencies increased as the test proceeded. Near the completion of the test, PCP removal was about 92 percent, while PAH removal ranged from 86 to 99 percent.

The demonstration reports are expected to be available in the first quarter 1991.

FOR FURTHER INFORMATION:

EPA Project Manager:
Mary K. Stinson
U.S. EPA
Risk Reduction Engineering Laboratory
Woodbridge Avenue
Edison, New Jersey 08837
908-321-6683
FTS: 340-6683

Technology Developer Contact:
John K. Sheldon
BioTrol, Inc.
11 Peavey Road
Chaska, Minnesota 55318
612-448-2515
Fax: 612-448-6050

BIOVERSAL USA, INC.
(Biogenesis Soil Cleaning Process)

TECHNOLOGY DESCRIPTION:

The BioGenesis™ process uses a specialized truck, gravity and cyclone separators, and a bioreactor to wash contaminated soil. The wash rate for hydrocarbon contamination up to 5,000 ppm is 25 tons per hour; higher contamination levels require slower wash rates. After the first wash, 100 to 200 ppm of the residuals remain. A second wash reduces residuals even further. A single wash removes 95% to 99% of hydrocarbon concentrations up to 16,000 ppm. One or two additional washes are used for concentrations up to 45,000 ppm.

The residuals biodegrade at an accelerated rate due to contact with BioVersal™, a light, alkaline, organic formula used to reduce oil contamination. Figure 1 shows the soil-cleaning procedure. Twenty-five tons of contaminated soil are dumped into a mixture of water and BioVersal™. For 15 to 30 minutes, aeration equipment agitates the mixture, washing the soil and encapsulating oil molecules with BioVersal™.

After washing, the liquid products are recycled or treated, and the soil is dumped out of the soil washer. The bioreactor processes the minimal amount of wastewater produced by the soil washer. Recovered oils are recycled.

PCBs, metals, and other hazardous materials are extracted in the same manner, then processed using specific treatment methods. All equipment is mobile, and treatment is normally on-site.

WASTE APPLICABILITY:

This technology is applicable to soil contaminated with volatile and nonvolatile hydrocarbons. These include asphaltenes, PCBs, polycylic hydrocarbons, and epichlorhydrin.

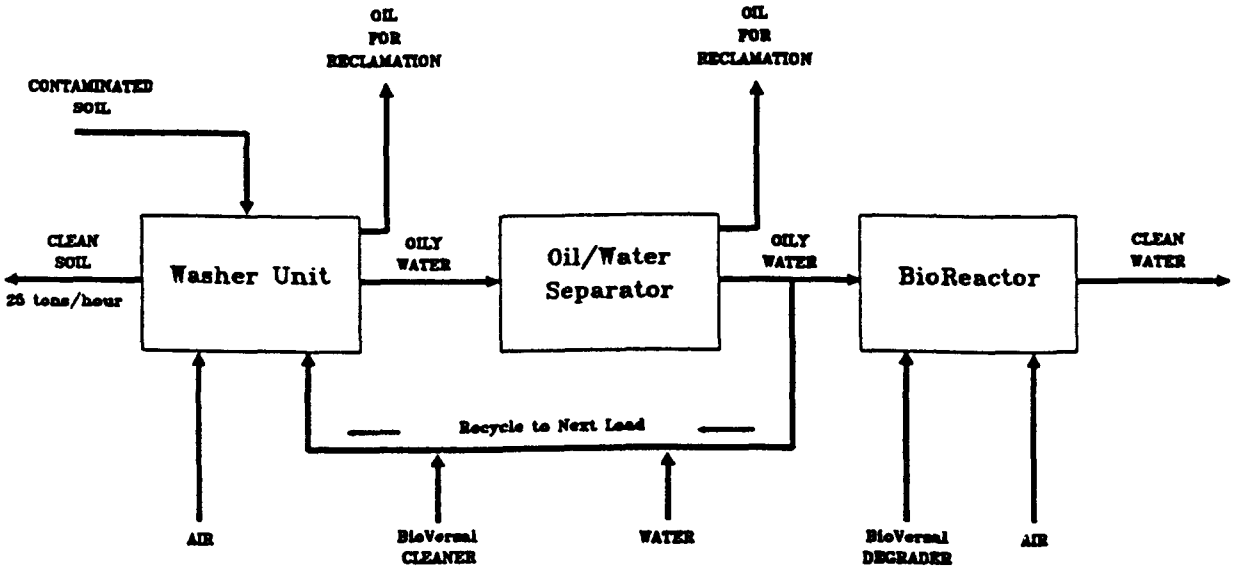

Figure 1. Biogenesis Soil Cleaning Process

STATUS:

This technology is used commercially in Europe. The technology was accepted into the SITE Demonstration Program in July 1990.

FOR FURTHER INFORMATION:

EPA Project Manager:
Diana Guzmán
U.S. EPA
Risk Reduction Engineering Laboratory
26 West Martin Luther King Drive
Cincinnati, Ohio 45268
513-569-7819
FTS: 684-7819

Technology Developer Contact:
Mohsen C. Amiran
BioVersal USA, Inc.
1703 Victoria Drive
Suite 303
Mount Prospect, IL 60056
708-228-7316

or

Charles L. Wilde
10626 Beechnut Court
Fairfax Station, Virginia 22039
(703) 250-3442

CF SYSTEMS CORPORATION (Solvent Extraction)

TECHNOLOGY DESCRIPTION:

This technology uses liquified gas solvent to extract organics (such as hydrocarbons), oil, and grease from wastewater or contaminated sludges and soils. Carbon dioxide is the gas used for aqueous solutions, while propane and/or butane is used for sediment, sludges and soils (semisolids).

Contaminated solids, slurrys or wastewaters are fed into the extractor (Figure 1). Solvent (gas condensed by compression) is also fed to the extractor, making nonreactive contact with the waste. Typically, more than 99 percent of the organics are separated from the feedwaste. Following phase separation of the solvent and organics, treated water is removed from the extractor while the mixture of solvent and organics passes to the separator through a valve, where pressure is partially reduced. In the separator, the solvent is vaporized and recycled as fresh solvent. The organics are drawn off from the separator, and either reused or diposed.

The extractor design is different for contaminated wastewaters and semisolids. For wastewaters, a tray tower contactor is used. For semisolids, a series of extractor/decanters operating countercurrently is used.

WASTE APPLICABILITY:

This technology can be applied to waste containing carbon tetrachloride, chloroform, benzene, naphthalene, gasoline, vinyl acetate, furfural, butyric acid, higher organic acids, dichloroethane, oils and grease, xylene, toluene, methyl acetate, acetone, higher alcohols, butanol, propanol, phenol, heptane, PCBs and other complex organics.

STATUS:

The pilot-scale system was tested on PCB-laden sediments from the New Bedford (Mass.) Harbor Superfund site during September 1988.

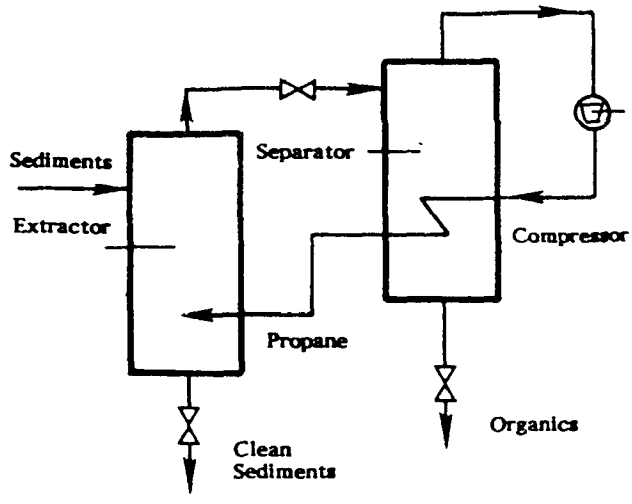

Figure 1. Solvent extraction unit process diagram.

PCB concentrations in the harbor ranged from 300 ppm to 2,500 ppm. The Technology Evaluation Report (TER) was published in early 1990 (EPA/540/5-90/002).

Commercial systems have been sold to Clean Harbors, Braintree, Massachusetts, for wastewater clean-up; and Ensco of Little Rock, Arkansas, for incinerator pretreatment. A unit is in operation at Star Enterprise, Port Arthur, Texas, treating API separator sludge to meet Best Demonstrated and Available Technology (BDAT) standards for organics.

DEMONSTRATION RESULTS:

This technology was demonstrated concurrently with dredging studies managed by the U.S. Army Corps of Engineers. Contaminated sediments were treated by the CF Systems Pit Cleanup Unit, using a liquified propane and butane mixture as the extraction solvent.

The following test results include the number of passes made during each test and the concentration of PCBs before and after each test:

		PCB concentration	
	Passes	Before	After
Test 2	9	360 ppm	8 ppm
Test 3	3	288 ppm	82 ppm
Test 4	6	2575 ppm	200 ppm

Extraction efficiencies were high, despite some operating difficulties during the tests. The use of treated sediment as feed to the next pass caused cross-contamination in the system. Full scale commercial systems are designed to eliminate problems associated with the pilot plant design.

APPLICATIONS ANALYSIS SUMMARY:

The following conclusions were drawn from this series of tests and other data:

- Extraction efficiencies of 90-98% were achieved on sediments containing between 350 and 2,575 ppm PCBs. PCB concentrations were as low as 8 ppm in the treated sediment.
- In the laboratory, extraction efficiencies of 99.9% have been obtained for volatile and semivolatile organics in aqueous and semi-solid wastes.
- Operating problems included solids being retained in the system hardware and foaming in receiving tanks. The vendor identified corrective measures that will be implemented in the full-scale commercial unit.
- Projected costs for PCB cleanups are estimated at approximately $150 to $450 per ton, including material handling and pre- and post-treatment costs. These costs are highly sensitive to the utilization factor and job size, which may result in lower costs for large cleanups.

FOR FURTHER INFORMATION:

EPA Project Manager:
Laurel Staley
U.S. EPA
26 West Martin Luther King Drive
Cincinnati, Ohio 45268
513-569-7863
FTS: 684-7863

Technology Developer Contact:
Chris Shallice
CF Systems Corporation
140 Second Avenue
Waltham, Massachusetts 02154
617-890-1200 (ext. 158)

CHEMFIX TECHNOLOGIES, INC.
(Solidification/Stabilization)

TECHNOLOGY DESCRIPTION:

This solidification/stabilization process is an inorganic system in which soluble silicates and silicate setting agents react with polyvalent metal ions and other waste components, to produce a chemically and physically stable solid material. The treated waste matrix displays good stability, a high melting point, and a friable texture. The matrix may be similar to soil, depending upon the water content of the feed waste.

The feed waste is first blended in the reaction vessel (Figure 1) with certain reagents that are dispersed and dissolved throughout the aqueous phase. The reagents react with polyvalent ions in the waste. Inorganic polymer chains (insoluble metal silicates) form throughout the aqueous phase and physically entrap the organic colloids within the microstructure of the product matrix.

The water-soluble silicates then react with complex ions in the presence of a siliceous setting agent, producing amorphous, colloidal silicates (gels) and silicon dioxide, which acts as a precipitating agent. Most of the heavy metals in the waste become part of the silicate. Some of the heavy metals precipitate with the structure of the complex molecules. A very small percentage (estimated to be less than one percent) of the heavy metals precipitates between the silicates and is not chemically immobilized.

Since some organics may be contained in particles larger than the colloids, all of the waste is pumped through processing equipment, creating sufficient shear to emulsify the organic constituents. Emulsified organics are then solidified and discharged to a prepared area, where the gel continues to set. The resulting solids, though friable, encase any organic substances that may have escaped emulsification.

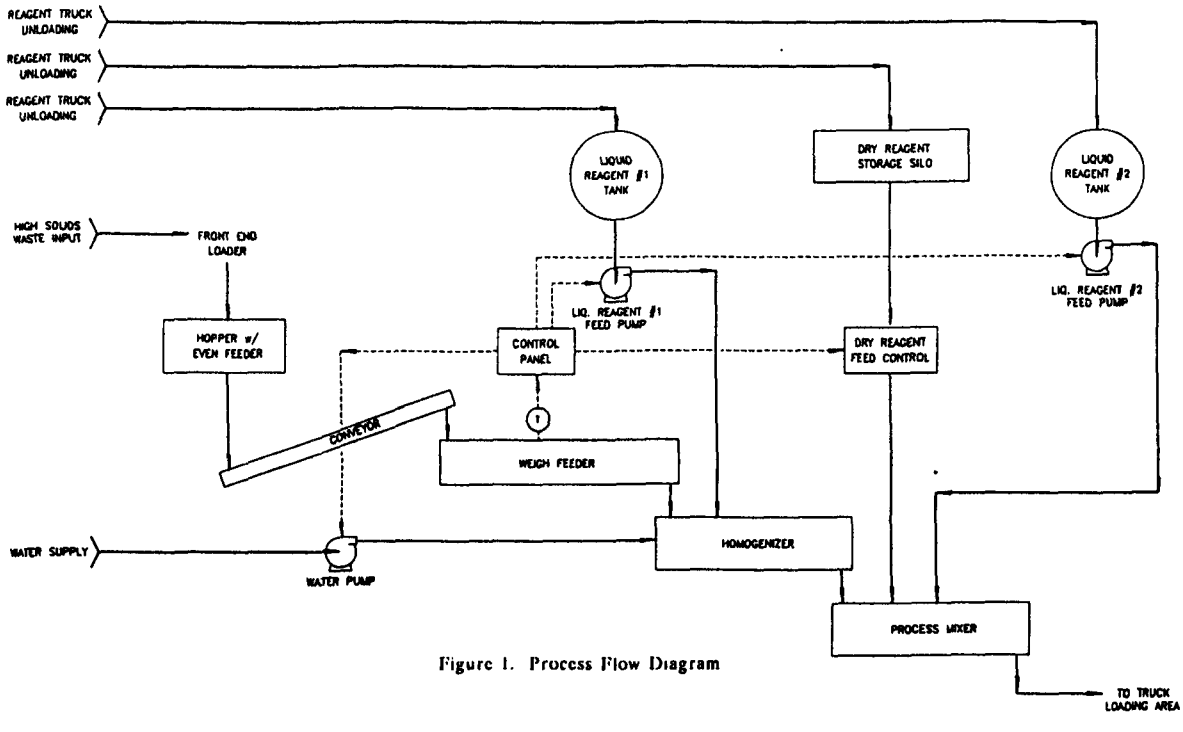

Figure 1. Process Flow Diagram

The system can be operated at 5 to 80 percent solids in the waste feed; water is added for drier wastes. Portions of the water contained in the wastes are involved in three reactions after treatment: (1) hydration, similar to that of cement reactions; (2) hydrolysis reactions; and (3) equilibration through evaporation. There are no side streams or discharges from this process.

WASTE APPLICABILITY:

This technology is suitable for contaminated soils, sludges, and other solid wastes. It can also be used for base, neutral, or acid extractable organics of high molecular weight, such as refinery wastes, creosote, and wood-treating wastes.

The process is applicable to electroplating wastes, electric arc furnace dust, and municipal sewage sludge containing heavy metals such as aluminum, antimony, arsenic, barium, beryllium, cadmium, chromium, iron, lead, manganese, mercury, nickel, selenium, silver, thallium, and zinc.

STATUS:

The technology was demonstrated in March 1989 at the Portable Equipment Salvage Co. site in Clackamas, Oregon. Preliminary results are available in a Demonstration Bulletin (October 1989). A single draft report describing the demonstration and future application of this technology was completed. The final demonstration report was completed in early 1990.

From Fall 1989 through Winter 1990, Chemfix Technologies, Inc.'s subsidiary Chemfix Environmental Services, Inc. (CES), applied a high solids CHEMSET® reagent protocol approach to the treatment of about 30,000 cubic yards of heavy metal-contaminated waste. The goal of reducing leachable hexavalent chromium to below 0.5 ppm in the TCLP was met, as well as the goal of producing a synthetic clay cover material with low permeability (less than 1 x 10^{-6} cm/sec). The production goal of exceeding 400 tons per day was also met. This included production during many subfreezing days in December, January, and March.

In Summer 1990, CES engaged in another high solids project involving lead.

DEMONSTRATION RESULTS

- The Chemfix Technology was effective in reducing the concentrations of lead and copper in the TCLP extracts. The concentrations in the extracts from the treated wastes were 94 to 99 percent less than those from the untreated wastes. Total lead concentrations in the raw waste approached 14 percent.
- The volume of the excavated waste material increased from 20 to 50 percent as a result of treatment.
- In the durability tests, the treated wastes showed little or no weight loss after 12 cycles of wetting and drying or freezing and thawing.
- The unconfined compressive strength (UCS) of the wastes varied between 27 and 307 psi after 28 days. Permeability decreased by more than one order of magnitude.
- The air monitoring data suggest there was no significant volatilization of PCBs during the treatment process.

FOR FURTHER INFORMATION:

EPA Project Manager:
Edwin Barth
U.S. EPA
Center for Environmental Research Information
26 West Martin Luther King Drive
Cincinnati, Ohio 45268
513-569-7669
FTS: 684-7669

Technology Developer Contact:
Philip N. Baldwin, Jr.
Chemfix Technologies, Inc.
Suite 620, Metairie Center
2424 Edenborn Avenue
Metairie, Louisiana 70001
504-831-3600

CHEMICAL WASTE MANAGEMENT
(X*TRAX™ Low-Temperature Thermal Desorption)

TECHNOLOGY DESCRIPTION:

The X*TRAX™ technology is a low-temperature (200 to 900° F) thermal separation process designed to remove organic contaminants from soils, sludges, and other solid media (Figure 1). It is not an incinerator or a pyrolysis system. Chemical oxidation and reactions are not encouraged, and no combustion byproducts are formed. The organic contaminants are removed as a condensed high BTU liquid, which must then be either destroyed in a permitted incinerator or used as a supplemental fuel. Because of lower operating temperatures and gas flow rates, this process is less expensive than incineration.

An externally-fired rotary dryer is used to volatilize the water and organic contaminants into an inert carrier gas stream. The processed solids are then cooled with condensed water. The moisture content is adjusted to eliminate dusting and produce a solid that is ready to be placed and compacted in its original location. The feed rate, the dryer temperature, and the residence time of materials in the dryer can be adjusted to control the degree of contaminant removal.

The organic contaminants and water vapor driven from the solid are transported out of the dryer by an inert nitrogen carrier gas. The carrier gas flows through a duct to the gas treatment system, where organic vapors, water vapors, and dust particles are removed and recovered from the gas. The gas first passes through a high-energy scrubber. Dust particles and 10 to 30 percent of the organic contaminants are removed by the scrubber. The gas then passes through two heat exchangers in series, where it is cooled to less than 40°F. Most of the remaining organic and water vapors are condensed as liquids in the heat exchangers.

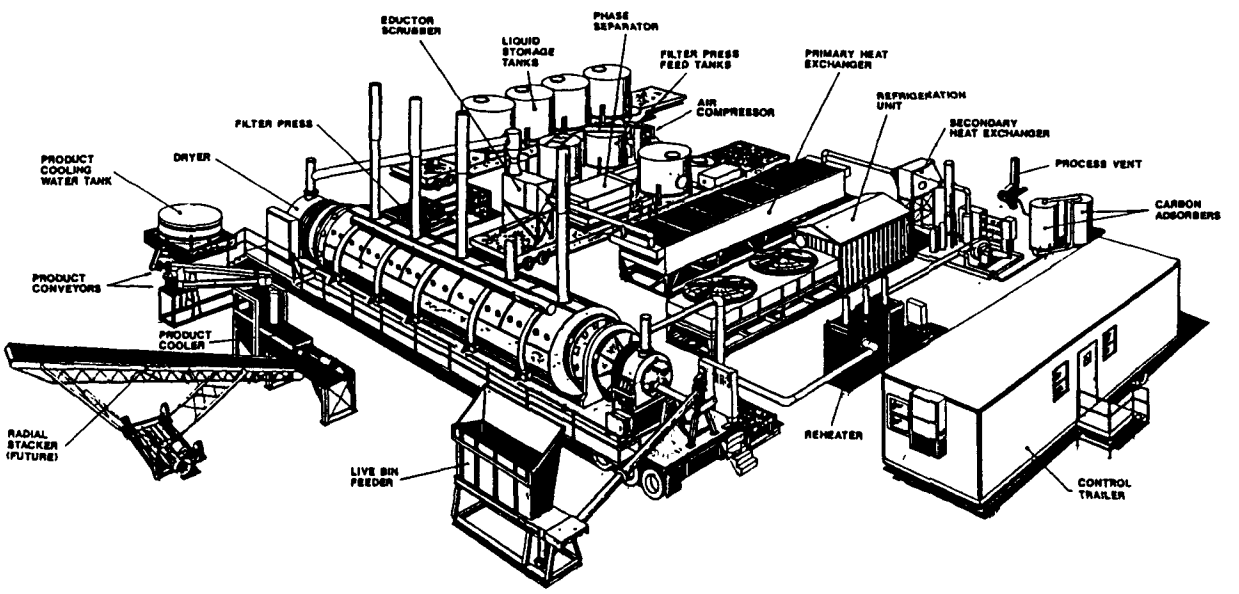

Figure 1 Pilot-Scale X*TRAX System

The majority of the carrier gas passing through the gas treatment system is reheated and recycled to the dryer. Approximately 5 to 10 percent of the gas is cleaned by passing it through a filter and two carbon adsorbers, before it is discharged to the atmosphere. The volume of gas released from this process vent is approximately 100 to 200 times less than an equivalent capacity incinerator. This discharge helps maintain a small negative pressure within the system and prevents potentially contaminated gases from leaking. The discharge also allows makeup nitrogen to be added to the system, preventing oxygen concentrations from exceeding combustibility limits.

WASTE APPLICABILITY:

This technology was developed primarily for on-site remediation of organic contaminated soils. The process can remove and collect volatiles, semivolatiles, and PCBs, and has been demonstrated on a variety of soils ranging from sand to very cohesive clays. Filter cakes and pond sludges have also been successfully processed. In most cases, volatile organics are reduced to below 1 ppm and frequently to below the laboratory detection level. Semivolatile organics are typically reduced to less than 10 ppm and frequently below 1 ppm. Soils containing 120 to 6,000 ppm PCBs have been reduced to 2 to 25 ppm.

The process is not applicable to heavy metals, with the exception of mercury. However, stabilization agents can be added to the feed or treated solids before cooling for metals treatment. Tars and heavy pitches create material handling problems.

STATUS:

CWM currently has three X*TRAX systems available: laboratory, pilot, and full-scale. There are two laboratory-scale systems being used for treatability studies. One system is operated by Chem Nuclear systems, Inc. in Barnwell, SC for mixed (RCRA/Radioactive) wastes; and the other by CWM RD&D at its facility in Geneva, IL, for RCRA and TSCA wastes. More than 30 tests have been completed since January 1988. Results from these laboratory-scale tests included 97.9 percent removal efficiency for soil contaminated with 805 ppm PCBs.

The pilot-scale system is in operation at the CWM Kettleman Hills facility in California. During 1989-90, ten different PCB-contaminated soils were processed under a TSCA RD&D permit which expired in January 1990. For soils containing 120 to 6,000 ppm PCBs, the removal efficiency ranged from 97.2 to 99.5%. Nine of the ten soils were reduced to less than 25 ppm.

The first Model 200 full-scale X*TRAX system was completed in early 1990 and is shown in Figure 1. The system will be used to remediate 35,000 tons of PCB-contaminated soil. EPA plans to conduct a SITE demonstration during this remediation.

FOR FURTHER INFORMATION:

EPA Project Manager:
Paul dePercin
U.S. EPA
Risk Reduction Engineering Laboratory
26 West Martin Luther King Drive
Cincinnati, OH 45268
513-569-7797
FTS: 684-7797

Technology Developer Contact:
Carl Swanstrom
Chemical Waste Management, Inc.
Geneva Research Center
1950 S. Batavia
Geneva, IL 60134
708-513-4578

DEHYDRO-TECH CORPORATION
(Carver-Greenfield Process for Extraction of Oily Waste)

TECHNOLOGY DESCRIPTION:

The Carver-Greenfield Process® is designed to separate materials into their constituent solid, oil (including oil-soluble substances), and water phases. It is primarily intended for soils and sludges contaminated with oil-soluble hazardous compounds. The technology uses a food-grade "carrier oil" to extract the oil-soluble contaminants (Figure 1). Pretreatment is necessary to achieve particle sizes less than 3/8-inch.

The carrier oil, with a boiling point of 400° F, typically is mixed with waste sludge or soil and the mixture is placed in the evaporation system to remove any water. The oil serves to fluidize the mix and maintain a low slurry viscosity to ensure efficient heat transfer, allowing virtually all of the water to evaporate.

Oil-soluble contaminants are extracted from the waste by the carrier oil. Volatile compounds present in the waste are also stripped in this step and condensed with the carrier oil or water. After the water is evaporated from the mixture, the resulting dried slurry is sent to a centrifuging section that removes most of the carrier oil from the solids.

After centrifuging, residual carrier oil is removed by a process known as "hydroextraction." The carrier oil is recovered by evaporation and steam stripping. The hazardous constituents are removed from the carrier oil by distillation. This stream can be incinerated or reclaimed. In some cases, heavy metals in the solids will be complexed with hydrocarbons and will also be extracted by the carrier oil.

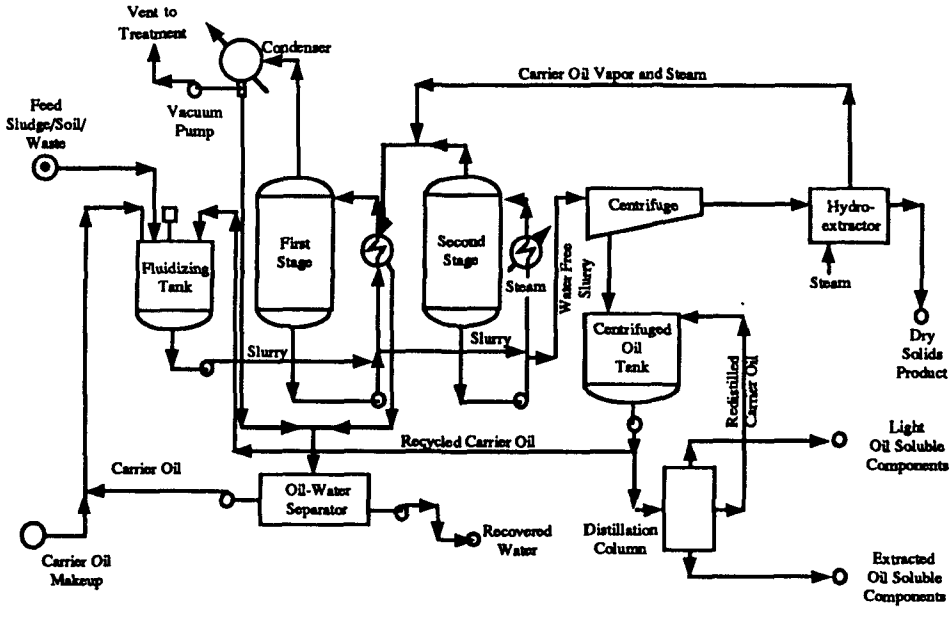

Figure 1. Simplified Carver Greenfield process flow diagram.

WASTE APPLICABILITY:

The Carver-Greenfield process can be used to treat sludges, soils, and other water-bearing wastes containing oil-soluble hazardous compounds, including PCBs, PNAs, and dioxins. The process has been commercially applied to municipal wastewater sludge, paper mill sludge, rendering waste, pharmaceutical plant sludge, and many other wastes.

STATUS:

The process has been successfully tested in a pilot plant on refinery "slop oil," consisting of 72 percent water, as well as on a mixed refinery waste consisting of dissolved air flotation sludge, API separator bottoms, tank bottoms, and biological sludge. EPA has identified the PAB Oil site in Louisiana as a potential site for demonstrating this technology. The PAB oil site contains petroleum wastes and contaminated soils, and a SITE demonstration is tentatively planned for January 1991.

FOR FURTHER INFORMATION:

EPA Project Manager:
Laurel Staley
U.S. EPA
26 West Martin Luther King Drive
Cincinnati, Ohio 45268
513-569-7863
FTS: 684-7863

Technology Developer Contact:
Thomas C. Holcombe
Dehydro-Tech Corporation
6 Great Meadow Lane
East Hanover, New Jersey 07936
201-887-2182

E.I. DUPONT DE NEMOURS AND COMPANY
OBERLIN FILTER COMPANY
(Membrane Microfiltration)

TECHNOLOGY DESCRIPTION:

This microfiltration system is designed to remove solid particles from liquid wastes, forming filter cakes typically ranging from 40 to 60 percent solids. The system can be manufactured as an enclosed unit, requires little or no attention during operation, is mobile, and can be trailer-mounted.

The DuPont/Oberlin microfiltration system (Figure 1) uses Oberlin's automatic pressure filter combined with DuPont's special Tyvek filter material (Tyvek T-980) made of spun-bonded olefin. The filter material is a thin, durable plastic fabric with tiny openings (about one ten-millionth of a meter in diameter) that allow water or other liquids, along with solid particles smaller than the openings, to flow through. Solids in the liquid stream that are too large to pass through the openings accumulate on the filter, and can be easily collected for disposal.

The automatic pressure filter has two chambers -- an upper chamber for feeding waste through the filter, and a lower chamber for collecting the filtered liquid (filtrate). At the start of a filter cycle, the upper chamber is lowered to form a liquid-tight seal against the filter. The waste feed is then pumped into the upper chamber and through the filter. Filtered solids accumulate on the Tyvek surface, forming a filter cake, while filtrate is collected in the lower chamber. Air is fed into the upper chamber at about 45 pounds per square inch, and used to further dry the cake and remove any liquid remaining in the upper chamber. When the cake is considered to be dry, the upper chamber is lifted and the filter cake is automatically discharged. Clean filter material is then drawn from a roll into the system for the next cycle. Both the filter cake and the filtrate can be collected and treated further prior to disposal if necessary.

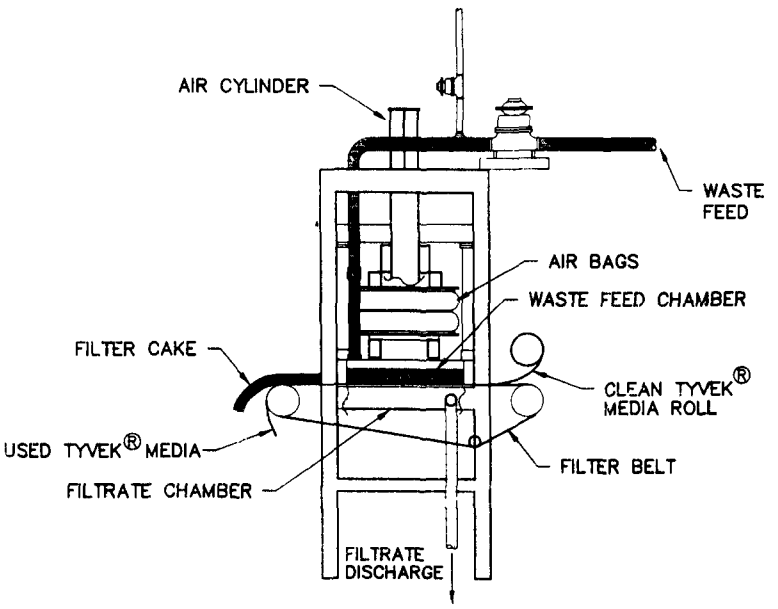

Figure 1. DuPont/Oberlin microfiltration system.

WASTE APPLICABILITY:

This treatment technology is applicable to hazardous waste suspensions, particularly liquid heavy metal- and cyanide-bearing wastes (such as electroplating rinsewaters); groundwater contaminated with heavy metals; landfill leachate; and process wastewaters containing uranium. The technology is best suited for treating wastes with solid concentrations less than 5,000 parts per million; otherwise, the cake capacity and handling become limiting factors. The developers claim the system can treat any type of solids, including inorganics, organics, and oily wastes with a wide variety of particle sizes. Moreover, because the unit is enclosed, the system is said to be capable of treating liquid wastes containing volatile organics.

STATUS:

This technology was demonstrated at the Palmerton Zinc Superfund site in Palmerton, Pennsylvania. The shallow aquifer at the site, contaminated with dissolved heavy metals (such as cadmium, lead, and zinc), was selected as the feed waste for the demonstration. Pilot studies on the ground water have shown that the microfiltration system can produce a 35 to 45 percent-solids filter cake, and a filtrate with non-detectable levels of heavy metals.

The demonstration was conducted over a four-week period in April and May 1990. A Demonstration Bulletin summarizing the results at the demonstration was prepared in August 1990. A Technology Evaluation Report, Applications Analysis Report, and video of the demonstration are currently being finalized.

DEMONSTRATION RESULTS:

During the demonstration at the Palmerton Zinc Superfund site, the DuPont/Oberlin microfiltration system achieved the following results:

- Zinc and total suspended solids removal efficiencies ranged from 99.75 to 99.99 percent.
- Solids in the filter cake ranged from 30.5 to 47.1 percent.
- Dry filter cake in all test runs passed the RCRA permit filter liquids test.
- Filtrate met the applicable National Pollution Discharge Elimination System standard for zinc, but exceeded the standard for pH.
- A composite filter cake sample passed the EP Toxicity and TCLP tests for metals.

FOR FURTHER INFORMATION:

EPA Project Manager:
John F. Martin
U.S. EPA
Risk Reduction Engineering Laboratory
26 West Martin Luther King Drive
Cincinnati, Ohio 45268
513-569-7758
FTS: 684-7758

Technology Developer Contact:
Ernest Mayer
E.I. DuPont de Nemours and Company
Engineering Department L1359
P.O. Box 6090
Newark, Delaware 19714-6090
302-366-3652

ECOVA CORPORATION
(In-Situ Biological Treatment)

TECHNOLOGY DESCRIPTION:

Ecova Corporation's bioremediation technology is designed to biodegrade chlorinated and non-chlorinated organic contaminants by employing aerobic bacteria that use the contaminants as their carbon source. This proposed technology has two configurations: in-situ biotreatment of soil and water; and on-site bioreactor treatment of contaminated ground water.

A primary advantage of in-situ bioremediation is that contaminants in subsurface soils and ground water can be treated without excavating overlying soil. The technology uses special strains of cultured bacteria and naturally occurring microorganisms in on-site soils and ground water. Since the treatment process is aerobic, oxygen and soluble forms of mineral nutrients must be introduced throughout the saturated zone. The end products of the aerobic biodegradation are carbon dioxide, water, and bacterial biomass.

Contaminated ground water can also be recovered and treated in an aboveground bioreactor. Nutrients and oxygen can then be added to some or all of the treated water, and the water can be recycled through the soils as part of the in-situ soil treatment.

Because site-specific environments influence biological treatment, all chemical, physical, and microbiological factors are designed into the treatment system. Subsurface soil and groundwater samples collected from a site are analyzed for baseline parameters, such as volatile organics, metals, pH, total organic carbon, types and quantities of microorganisms, and nutrients. A treatability study, which includes flask and column studies, determines the effects of process parameters on system performance. The flask studies test biodegradation under optimum conditions, and the column studies test the three field applications: (1) soil flushing; (2) in-situ biotreatment, and (3) in-situ biotreatment using ground water treated in a bioreactor.

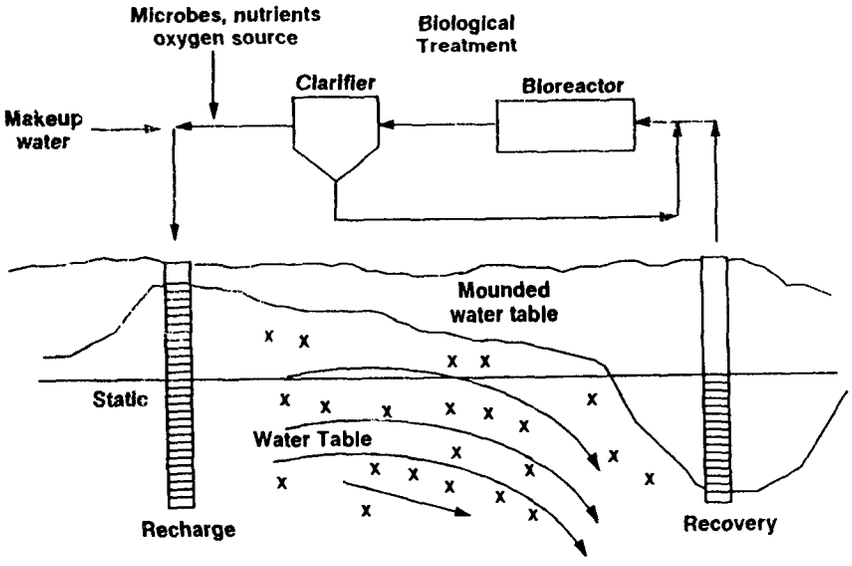

Figure 1. In situ bioreclamation processes.

WASTE APPLICABILITY:

Biological processes can be applied to water, soil, sludge, sediment, and other types of materials contaminated with organic constituents. The system must be engineered to maintain parameters such as pH, temperature, and dissolved oxygen (if the process is aerobic), within ranges conducive to the desired microbial activity. The technology is applicable to chlorinated solvents and non-chlorinated organic compounds.

STATUS:

Ecova's planned demonstration of this technology on a wide range of toxic organic compounds at the Goose Farm Superfund Site in Plumstead Township, NJ was cancelled after the completion of treatability studies in April 1990. The treatability study report will be published by January 1991.

Although the demonstration was cancelled at the Goose Farm site, the technology may be demonstrated at another hazardous waste site in the future.

FOR FURTHER INFORMATION:

EPA Project Manager:
Naomi P. Barkley
U.S. EPA
Risk Reduction Engineering Laboratory
26 West Martin Luther King Drive
Cincinnati, Ohio 45268
513-569-7854
FTS: 684-7854

Technology Developer Contact:
Michael Nelson
Ecova Corporation
3820 159th Avenue Northeast
Redmond, Washington 98052
206-883-1900

EPOC WATER, INC.
(Precipitation, Microfiltration, and Sludge Dewatering)

TECHNOLOGY DESCRIPTION:

In this first step of this process, heavy metals are chemically precipitated. The precipitates, along with all particles down to 0.2 - 0.1 micron, are filtered through a unique fabric crossflow microfilter (EXXFLOW). The concentrated stream is then dewatered in an automatic tubular filter press of the same fabric material (EXXPRESS). EXXPRESS filter cakes of up to 60% (weight per weight) solids are possible.

Microfiltration involves a proprietary woven polyester array of tubes. Waste effluent is pumped into the tubes and forms a dynamic membrane, which produces a high quality filtrate removing all particle sizes below 0.2 - 0.1 micron. The membrane is continually cleaned by the flow velocity, thereby preventing flux reduction.

Metals are removed via precipitation by adjusting the pH in the EXXFLOW feed tank. The metal hydroxides or oxides form the dynamic membrane with any other suspended solids. The concentrated stream will contain up to 5% solids for discharge to the EXXPRESS. Water recoveries are above 90% in most cases.

Other constituent removals are possible using seeded slurry methods in EXXFLOW. Hardness can be removed using lime. Oil and grease can be removed using adsorbents. Nonvolatile organics and solvents can be removed using seeded, powdered activated carbon or powdered ion exchange adsorbents.

The concentrate stream produced by EXXFLOW enters EXXPRESS with the discharge valve closed. A semi-dry cake up to 1/4 inch thick is formed on the inside of the tubular cloth. When the discharge valve is

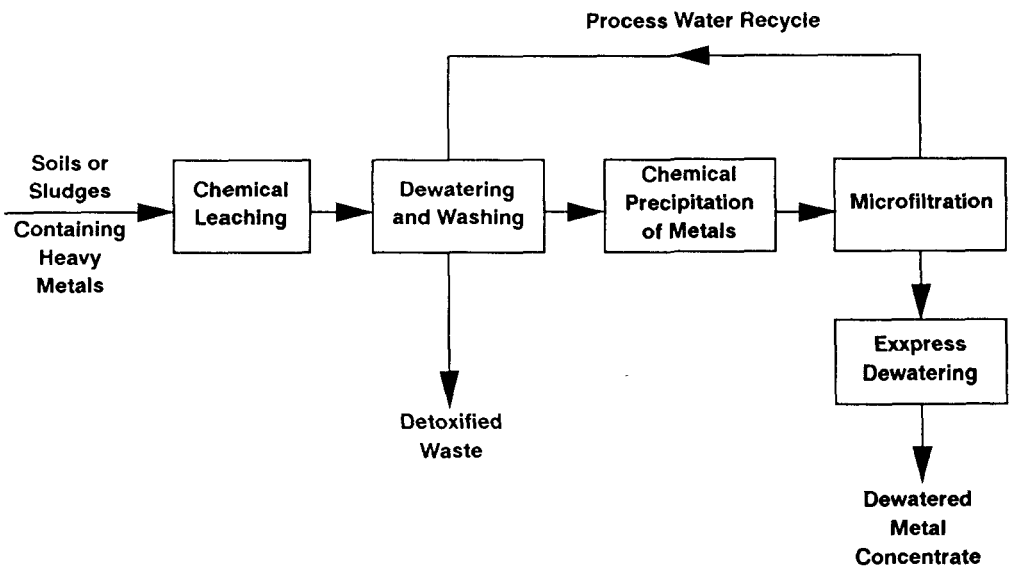

Figure 1. Schematic of detoxification process.

opened, rollers on the outside of the tubes move to form a venturi within the tube. The venturi creates an area of high velocity within the tubes, which aggressively cleans the cloth and discharges the cake in chip form onto a wedge wire screen. The discharge water is recycled back to the feed tank.

In cases where the solids in the raw feed water are extremely high, EXXPRESS can be used first, with EXXFLOW acting as a final polish for the product water.

In special circumstances, chelating agents can also be used to remove a particular metal. The leached slurry containing the solubilized metals is separated by an automatic cake discharge tubular filter press. The resulting filtrate is chemically treated to precipitate the heavy metals in hydroxide form.

Residual organic contamination in this precipitate can be removed with activated carbon. Heavy metals in the precipitate are separated and concentrated by microfiltration, using an innovative and flexible woven textile material that can separate particles as small as 0.1 microns. The process is capable of handling widely varying incoming solids concentrations.

The demonstration unit is transportable and is skid-mounted. The unit is designed to process approximately 30 pounds of solids per hour.

WASTE APPLICABILITY:

This technology is applicable to water containing heavy metals, pesticides, oil and grease, bacteria, suspended solids, and constituents that can be precipitated into particle sizes greater than 0.1 micron. The system can handle waste streams containing up to 5% (50,000 ppm) contaminant, producing a filtrate with less than 1.0 ppm and a semi-dry cake of 40-60% weight per weight. Nonvolatile organics and solvents can also be treated by adding powdered adsorbents.

Soils and sludge can be decontaminated through acid leaching of the metals followed by precipitation and microfiltration. Lime sludges from municipal, industrial, and power plant clarifiers can also be treated using this process.

STATUS:

This technology was accepted into the SITE Demonstration Program in 1989. The first application will be on acid mine drainage at the Iron Mountain Mine Superfund Site in Redding, CA. in late 1990. Bench-scale tests have been conducted.

FOR FURTHER INFORMATION:

EPA Project Manager:
S. Jackson Hubbard
U.S. EPA
Risk Reduction Engineering Laboratory
26 West Martin Luther King Drive
Cincinnati, OH 45268
513-569-7507
FTS: 684-7507

Technology Developer Contact:
Ray Groves
EPOC Water, Inc.
3065 Sunnyside, #101
Fresno, CA 93727
209-291-8144

EXCALIBUR ENTERPRISES, INC.
(Soil Washing/Catalytic Ozone Oxidation)

TECHNOLOGY DESCRIPTION:

The Excalibur technology is designed to treat soils with organic and inorganic contaminants. The technology is a two-stage process: the first stage extracts the contaminants from the soil, and the second stage oxidizes contaminants present in the extract. The extraction is carried out using ultrapure water and ultrasound. Oxidation involves ozone, ultraviolet light, and ultrasound. The treatment products of this technology are decontaminated soil and inert salts.

A flow schematic of the system is shown in Figure 1. After excavation, contaminated soil is passed through a 1-inch screen. Soil particles retained on the screen are crushed using a hammermill and sent back to the screen. Soil particles passing through the screen are sent to a soil washer, where ultrapure water extracts the contaminants from the screened soil. Ultrasound acts as a catalyst to enhance soil washing. Typically, 10 volumes of water are added per volume of soil, generating a slurry of about 10-20 percent solids. This slurry is conveyed to a /solid/liquid separator, such as a centrifuge or cyclone, to separate the decontaminated soil from the contaminated water. The decontaminated soil can be returned to its original location or disposed of appropriately.

After the solid/liquid separation, any oil present in the contaminated water is recovered using an oil/water separator. The contaminated water is ozonated prior to oil/water separation to aid in oil recovery. The water then flows through a filter to remove any fine particles. After the particles

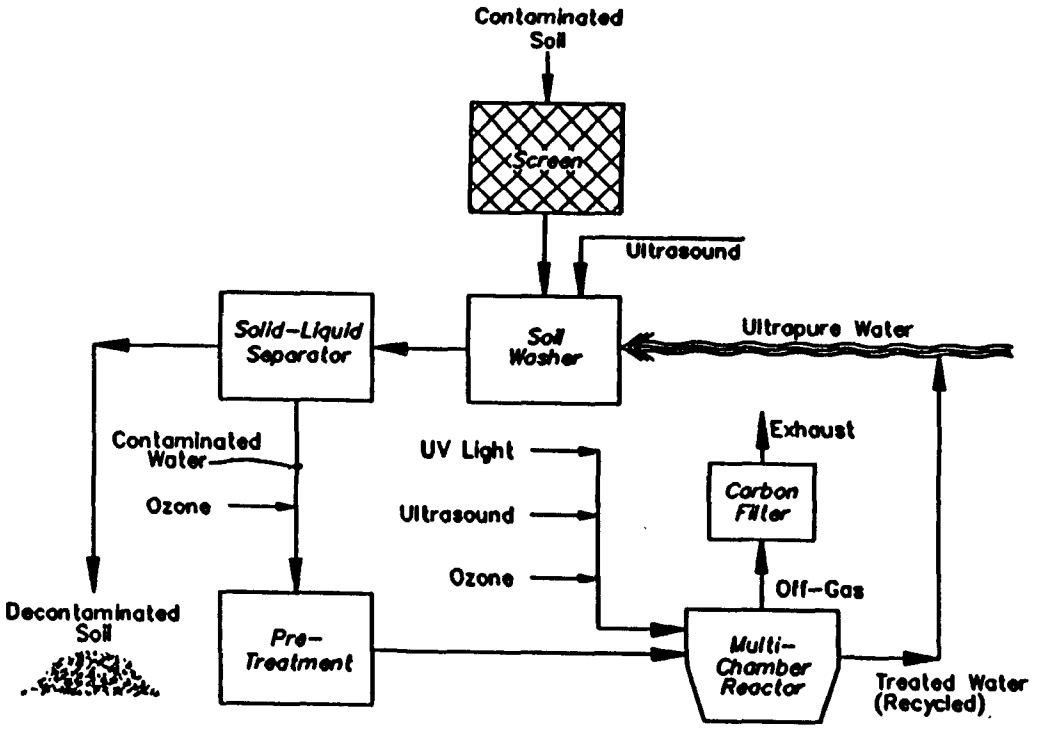

Figure 1. Excaliber Treatment System Flow Diagram.

are filtered, the water flows through a carbon filter and a deionizer to reduce the contaminant load on the multichamber reactor.

In the multichamber reactor, ozone gas, ultraviolet light, and ultrasound are applied to the contaminated water. Ultraviolet light and ultrasound catalyze the oxidation of contaminants by ozone. The treated water (ultrapure water) flows out of the reactor to a storage tank and is reused to wash another batch of soil. If makeup water is required, additional ultrapure water is generated on-site by treating tap water with ozone and ultrasound.

The treatment system is also equipped with a carbon filter to treat the off-gas from the reactor. The carbon filters are biologically activated to regenerate the spent carbon in-situ.

System capacities range from one cubic foot of solids per hour, with a water flow rate of one gallon per minute; to 27 cubic yards of solids per hour, with a water flow rate of 50 gallons per minute. The treatment units available for the SITE demonstration can treat 1 to 5 cubic yards of solids per hour.

WASTE APPLICABILITY:

This technology can be applied to soils, solids, sludges, leachates and ground water containing organics such as PCB, PCP, pesticides and herbicides, dioxins, and inorganics, including cyanides. The technology could effectively treat total contaminant concentrations ranging from 1 ppm to 20,000 ppm. Soils and solids greater than 1 inch in diameter need to be crushed prior to treatment.

STATUS:

The Excalibur technology was accepted into the SITE demonstration program in July, 1989. The Coleman-Evans site in Jacksonville, FL has been tentatively scheduled for a SITE demonstration in late 1990.

FOR FURTHER INFORMATION:

EPA Project Manager:
Norma Lewis
U.S. EPA
Risk Reduction Engineering Laboratory
26 West Martin Luther King Drive
Cincinnati, Ohio 45268
513-569-7665
FTS: 684-7665

Technology Developer Contact:
Lucas Boeve
Excalibur Enterprises, Inc.
314 West 53rd Street
New York, N.Y. 10019
212-484-2699

Florida Office:
3232 S.W. 2nd Avenue
Suite 107
Ft. Lauderdale, Florida 33315
305-763-9507

Excavation Techniques and Foam Suppression Methods

TECHNOLOGY DESCRIPTION:

This project was the result of a joint EPA effort involving the Risk Reduction Engineering Laboratory (Cincinnati, OH), Air and Energy Engineering Research Laboratory (Research Triangle Park, NC), and Region 9 to evaluate control technologies during excavation operations. In general, excavating soil contaminated with volatile organic compounds (VOCs) results in fugitive air emissions.

The area to be excavated was surrounded by a temporary enclosure (Figure 1). Air from the enclosure was vented through an emission control system before being released to the atmosphere. For example, in the case of hydrocarbon and SO_2 emissions, a scrubber and a carbon adsorption unit would be used to treat emissions. An additional emission control method, a vapor suppressant foam, was applied to the soil before and after excavation.

To control these emissions, containment and treatment technologies were combined during a SITE demonstration at the McColl Superfund site in Fullerton, CA.

WASTE APPLICABILITY:

These technologies are suitable for controlling VOC emissions during the excavation of contaminated soil.

STATUS:

This technique was observed at the McColl Superfund site in Fullerton, CA in June and July 1990. Results from the application are currently being prepared and will be available in November 1990.

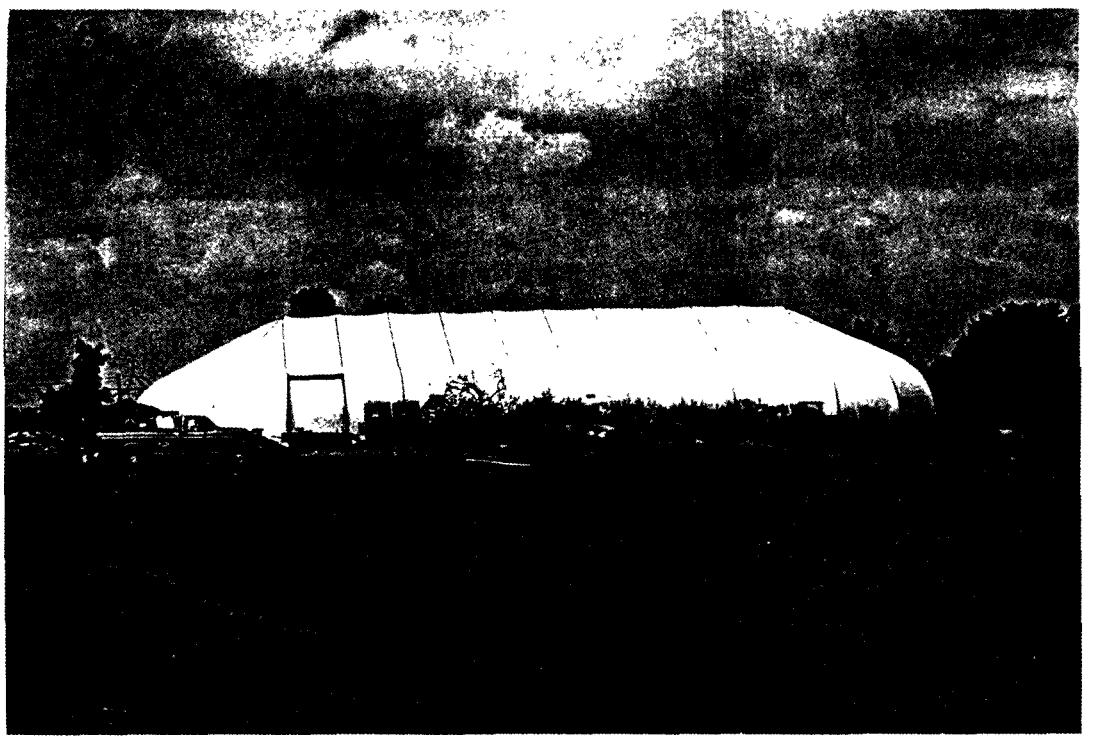

Figure 1. Excavation area enclosure.

DEMONSTRATION RESULTS:

An enclosure 60 feet wide, 160 feet long, and 26 feet high was erected over an area contaminated with VOCs and SO_2. Removal of the overburden and excavation of underlying waste was performed with a backhoe. There were three distinct layers of segregated waste: 3 feet of oily mud, 4 feet of tar, and a hard coal-like char layer. During excavation, 5-minute average air concentrations within the enclosed area were up to 1000 ppm for SO_2 and up to 492 ppm for total hydrocarbons (THC). The air pollution control system removed up to 99 percent of the SO_2 and up to 50 percent of the THC.

The concentrations of contaminants in the air inside the enclosure were higher than expected due in part to the vapor-suppressant foam's inability to form an impermeable membrane over the exposed wastes. The foams reacted with the highly acidic waste, causing degradation of the foam. Furthermore, purge water from foaming activities impacted operations by making surfaces slippery for workers and equipment.

A total of 101 cubic yards of overburden and 137 cubic yards of contaminated waste was excavated. The tar waste was solidified and stabilized by mixing with fly ash, cement, and water in a pug mill. The char wastes did not require further processing.

FOR FURTHER INFORMATION:

EPA Project Managers:
S. Jackson Hubbard
U.S. EPA
Risk Reduction Engineering Laboratory
26 West Martin Luther King Drive
Cincinnati, Ohio 45268
513-569-7507
FTS: 684-7507

and

John Blevins
U.S. EPA, Region 9
Mail Code H-6-1
75 Hawthorne Avenue
San Francisco, CA 94105
415-744-2241
FTS: 744-2241

EXXON CHEMICALS, INC. & RIO LINDA CHEMICAL CO. (Chemical Oxidation/Cyanide Destruction)

TECHNOLOGY DESCRIPTION:

This technology uses chlorine dioxide, generated on-site by a patented process, to oxidize organically contaminated aqueous waste streams, and simple and complex cyanide in water or solid media. Chlorine dioxide is an ideal oxidizing agent because it chemically alters contaminants to salts and non-toxic organic acids.

Chlorine dioxide gas is generated by reacting sodium chlorite solution with chlorine gas, or by reacting sodium chlorite solution with sodium hypochlorite and hydrochloric acid. Both processes produce at least 95 percent pure chlorine dioxide.

In aqueous treatment systems (Figure 1) the chlorine dioxide gas is fed into the waste stream via a venturi, which is the driving force for the generation system. The amount of chlorine dioxide required depends on the contaminant concentrations in the waste stream and the concentration of oxidizable compounds, such as sulfides.

In soil treatment applications, the chlorine dioxide may be applied in-situ via conventional injection wells or surface flushing. The concentration of chlorine dioxide would depend on the level of contaminants in the soil.

Chlorine dioxide treatment systems have been applied to drinking water disinfection, food processing sanitation, and as a biocide in industrial process water. Since chlorine dioxide reacts via direct oxidation rather than substitution (as does chlorine), the process does not form undesirable trihalomethanes.

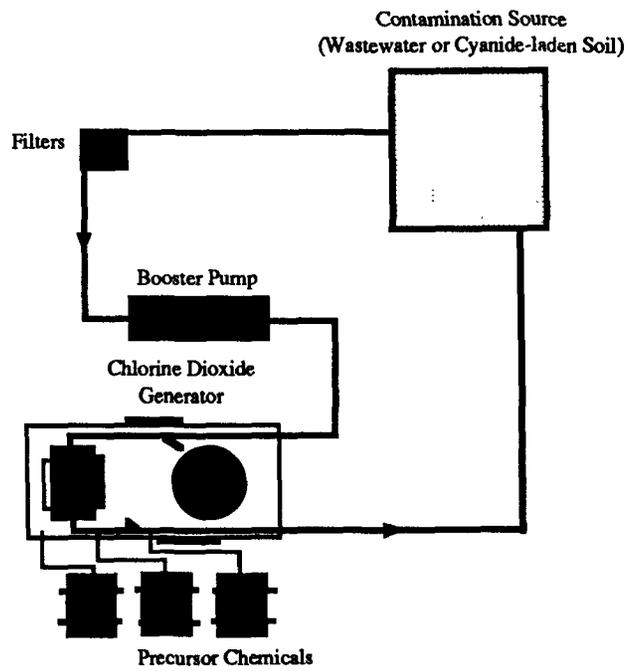

Figure 1. Typical treatment layout.

WASTE APPLICABILITY:

This technology is applicable to aqueous wastes, soils, or any leachable solid media contaminated with organic compounds. It can also be applied to groundwater contaminated with pesticides or cyanide; sludges containing cyanide, PCPs or other organics; and, industrial wastewater similar to refinery wastewater.

STATUS:

The SITE program has accepted two proposals from Exxon Chemicals, Inc. and Rio Linda Chemical Company to perform two separate demonstrations: one of cyanide destruction and the other of organics treatment. Site selection for these demonstrations is currently underway

FOR FURTHER INFORMATION:

EPA Project Manager:
Teri Shearer
U.S. EPA
Risk Reduction Engineering Laboratory
26 West Martin Luther King Drive
Cincinnati, Ohio 45268
513-569-7949
FTS: 684-7949

Technology Developer Contact:
Tony Kurpakus
Exxon Chemical Company
4510 East Pacific Coast Highway
Mailbox 18
Long Beach, California 90805
213-597-1937

FREEZE TECHNOLOGIES CORPORATION
(Freezing Separation)

TECHNOLOGY DESCRIPTION:

Freeze crystallization operates on the principle that when water freezes, the crystal structure that forms naturally excludes contaminants from the water molecule matrix. In this freeze crystallization process, refrigerant is injected directly into the feed, thus removing heat until a phase change from liquid to solid is achieved. Pure crystals of solute and solvent are formed separately and are separated from each other by gravity. The crystals are recovered and washed with melt-water to remove any adhering contaminants and then melted in a heat pump cycle before being discharged from the plant.

Mixed liquid waste enters the system through the feed heat exchanger (not shown), where it is cooled to within a few degrees of its freezing temperature (Figure 1). The cooled feed then enters the crystallizer, where it is mixed directly with boiling refrigerant. The water molecules are crystallized in the stirred solution and are maintained at a uniform ice concentration by continuous removal of ice slurry (a combination of ice crystals and liquid) from the crystallizer. The slurry is pumped to a eutectic separator (also called a growth tank) where gravity segregates the crystal of solvent and solute into different streams. A heat pump/refrigeration cycle removes refrigerant vapor from the crystallizer and compresses it so that it will give up its heat to melt the purified crystals.

Ice slurry from the growth tank is pumped to the crystal separator, where ice crystals form a porous pack. The liquid from the slurry is drained by gravity from the wash column via screened openings, and is then returned to the growth tank to transport more ice. Hydraulic forces generated by the flow of liquid to the screens in the middle of the ice pack propel the ice pack upward in the crystal separator. Melted product is used to transport the ice to a melter/condenser, where the slurry is melted and where hot refrigerant gas is condensed.

All refrigerants are soluble in water to some degree. Consequently, decanters and strippers (not shown) are used to remove this refrigerant from the melt, the concentrate, and any other liquid phases produced from the process prior to their discharge from the plant. The strippers operate under vacuum and

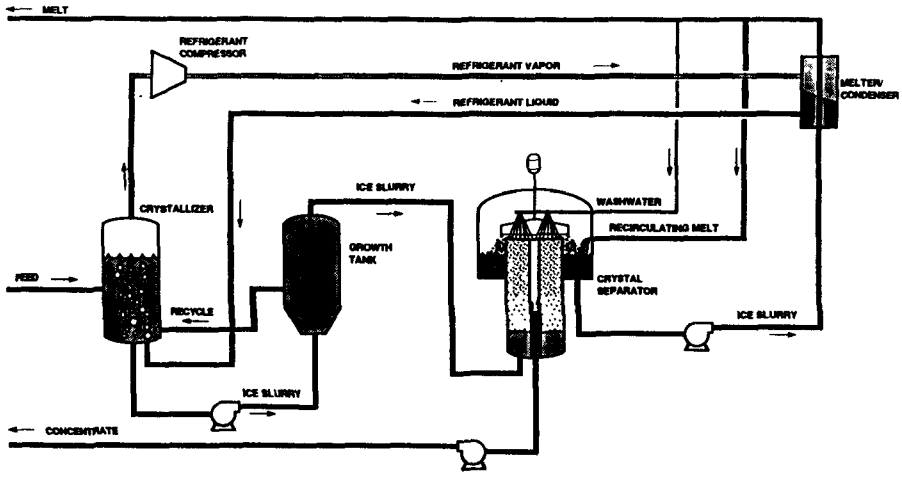

Figure 1. Simplified Process Schematic.

contain heaters that generate low-pressure steam to enhance refrigerant removal, if necessary.

WASTE APPLICABILITY:

This technology will remove both organic and inorganic as well as ionic and non-ionic species from contaminated aqueous streams. It works on both surface waters and ground waters as well as directly on process wastes and mixed (radioactive and hazardous) wastes. As Figure 2 shows, freeze technologies can process all of the contaminant types in a single stage. It is also capable of concentrating residuals to higher concentrations than other liquid separation processes.

The process is applicable to free liquids, whether the liquid is water or an organic solvent. It can be used in conjunction with other processes to treat wastes contained in non-aqueous media. For example, contaminated soils can be washed to transfer the contaminant into a liquid medium. The low concentrations in the washing medium are concentrated by freezing to allow by-product recovery or more economical final destruction.

STATUS:

This project was accepted into the SITE Demonstration Program in July 1988. Treatability studies have been completed. A demonstration of this technology is scheduled for early 1991 at the Stringfellow Superfund Site in Glen Avon, California.

FOR FURTHER INFORMATION:

EPA Project Manager:
S. Jackson Hubbard
U.S. EPA
Risk Reduction Engineering Laboratory
26 West Martin Luther King Drive
Cincinnati, Ohio 45268
513-569-7507
FTS: 684-7507

Technology Developer Contact:
James A. Heist
Freeze Technologies Corporation
2539-C Timberlake Road
P.O. Box 40968
Raleigh, North Carolina 27629-0968
919-850-0600

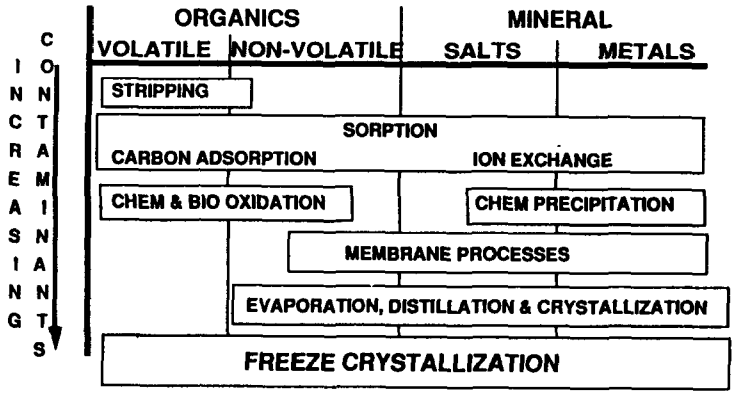

Figure 2. Waste Treatment Matrix

GEOSAFE CORPORATION
(In-Situ Vitrification)

TECHNOLOGY DESCRIPTION:

In-situ vitrification (ISV) uses an electrical network to melt soil or sludge at temperatures of 1600 to 2000° C, thus destroying organic pollutants by pyrolysis. Inorganic pollutants are incorporated within the vitrified mass, which has properties of glass. Both the organic and inorganic airborne pyrolysis byproducts are captured in a hood, which draws the contaminants into an off-gas treatment system that removes particulates and other pollutants of concern.

The vitrification process begins by inserting large electrodes into contaminated zones containing sufficient soil to support the formation of a melt (Figure 1). An array (usually square) of four electrodes is placed to the desired treatment depth in the volume to be treated. Because soil typically has low conductivity, flaked graphite and glass frit are placed on the soil surface between the electrodes to provide a starter path for electric current. The electric current passes through the electrodes and begins to melt soil at the surface. As power is applied, the melt continues to grow downward, at a rate of 1 to 2 inches per hour. Individual settings (each single placement of electrodes) may grow to encompass a total melt mass of 1000 tons and a maximum width of 30 feet. Single setting depths as great as 30 feet are considered possible. Depths of 17 feet have been achieved to date with the existing large-scale ISV equipment. Adjacent settings can be positioned to fuse to each other and to completely process the desired volume at a site. Stacked settings to reach deep contamination are also possible.

The large-scale ISV system melts soil at a rate of 4 to 6 tons per hour. Since the void volume present in particulate materials (20-40% for typical soils) is removed during processing, a corresponding volume reduction occurs. Volume is further reduced as some materials present in the soil, such as humus and organic contaminants, are removed as gases and vapors during processing. After cooling, a vitrified monolith results, with a silicate glass and microcrystalline structure. This monolith possesses excellent structural and environmental properties.

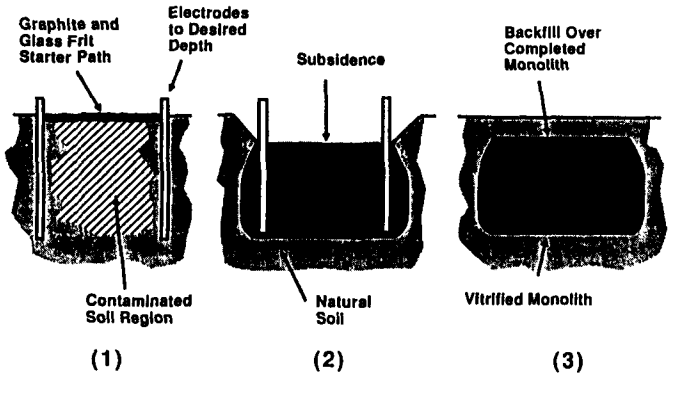

Figure 1 In-Situ Vitrification Process

The ISV system is mounted on three semi-trailers for transport to a site. Electric power is usually taken from a utility distribution system at transmission voltages of 125 or 138 kV; power may also be generated on-site by a diesel generator. The electrical supply system has an isolated ground circuit to provide appropriate operational safety.

Air flow through the hood is controlled to maintain a negative pressure. An ample supply of air provides excess oxygen for combustion of any pyrolysis products and organic vapors from the treatment volume. The off-gases, combustion products, and air are drawn from the hood (by induced draft blower) into the off-gas treatment system, where they are treated by: (1) quenching; (2) pH controlled scrubbing; (3) dewatering (mist elimination); (4) heating (for dewpoint control); (5) particulate filtration; and (6) activated carbon adsorption (Figure 2).

WASTE APPLICABILITY:

The ISV process can be used to destroy or remove organics and/or immobilize inorganics in contaminated soils or sludges. In saturated soils or sludges, the initial application of the electric current must reduce the moisture content before the vitrification process can begin. This increases energy consumption and associated costs. Also, sludges must contain a sufficient amount of glass-forming material (non-volatile, non-destructible solids) to produce a molten mass that will destroy or remove organic and immobilize inorganic pollutants. The ISV process is limited by: (1) individual void volumes in excess of 150 cubic feet; (2) rubble in excess of 10 percent by weight; and (3) combustible organics in the soil or sludge in excess of 5-10 weight percent, depending upon the heat value. These limitations must be addressed for each site.

STATUS:

Six full-scale demonstrations at the ISV process have been conducted on radioactive wastes at the Department of Energy's Hanford Nuclear Reservation. More than 90 tests at various scales have been performed on PCB wastes, industrial lime sludge, dioxins, metal plating wastes and other solid combustibles and liquid chemicals. Currently, the technology has been selected as part of a Record of Decision (ROD) or equivalent for use at eight sites within the U.S. and one site in Europe. Commercial operations began in November 1990. The SITE Program is determining which site to use for evaluating the technology.

FOR FURTHER INFORMATION:

EPA Project Manager:
Teri Shearer
U.S. EPA
Risk Reduction Engineering Laboratory
26 West Martin Luther King Drive
Cincinnati, Ohio 45268
513-569-7949
FTS: 684-7949

Technology Developer Contact:
James E. Hansen
Geosafe Corporation
303 Park Place, Suite 126
Kirkland, Washington 98033
206-822-4000

HORSEHEAD RESOURCE DEVELOPMENT CO., INC. (Flame Reactor)

TECHNOLOGY DESCRIPTION:

The Flame Reactor process (Figure 1) is a patented, hydrocarbon-fueled, flash smelting system that treats residues and wastes containing metals. The reactor processes wastes with a very hot (greater than 2000° C) reducing gas produced from the combustion of solid or gaseous hydrocarbon fuels in oxygen-enriched air. In a compact, low-capital cost reactor, the feed materials react rapidly, allowing a high waste throughput. The end products are a non-leachable slag (a glasslike solid when cooled) and a recyclable, heavy metal-enriched oxide. The volume reduction achieved (of waste to slag) depends on the chemical and physical properties of the waste.

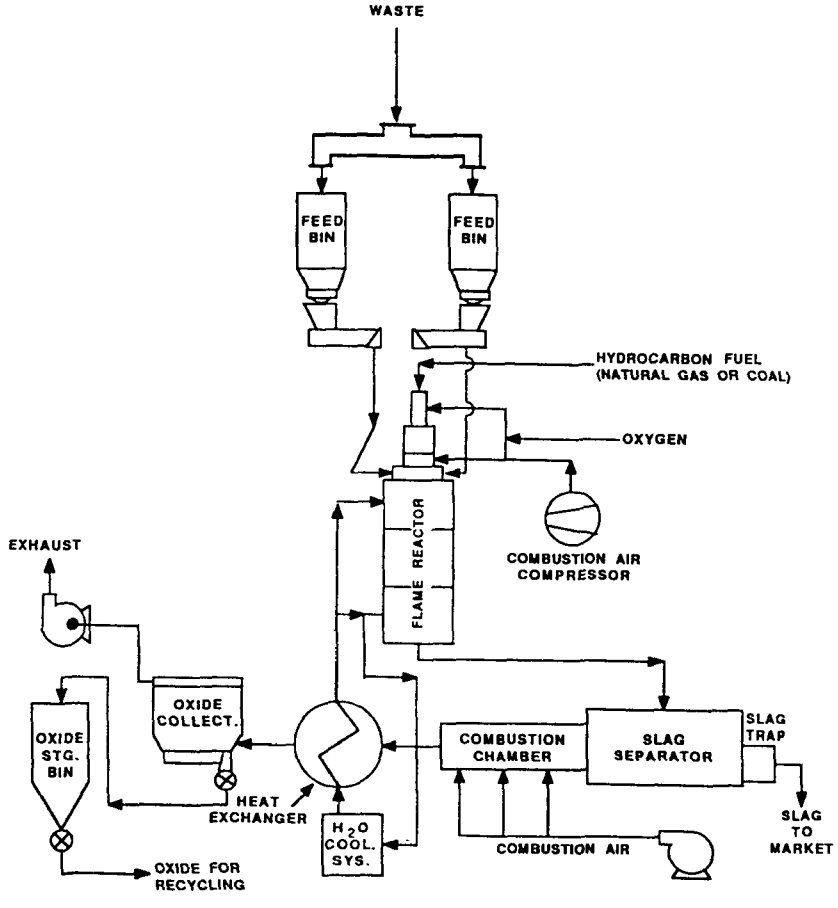

Figure 1. Flame Reactor Process Flow Schematic.

The Flame Reactor technology can be applied to granular solids, soil, flue dusts, slags, and sludges containing heavy metals. The volatile metals are fumed and captured in a product dust collection system, the nonvolatile metals are encapsulated in the slag. At the elevated temperature of the Flame Reactor technology, organic compounds are destroyed. In general, the process requires that wet agglomerated wastes be dry enough (up to 15% total moisture) to be gravity-fed and fine enough (less than 200 mesh) to react rapidly. Larger particles (up to 20 mesh) can be processed; however, a decrease in the efficiency of metals recovery usually results.

WASTE APPLICABILITY:

Electric arc furnace dust, lead blast furnace slag, iron residues, zinc plant leach residues and purification residues, and brass mill dusts and fumes have been successfully tested. Metal bearing wastes previously treated contained zinc (up to 40%), lead (up to 10%), cadmium (up to 3%), chromium (up to 3%), as well as copper, cobalt, nickel and arsenic.

STATUS:

The Flame Reactor demonstration plant at Monaca, Pennsylvania, has a capacity of 1.5 to 3.0 tons/hour. The SITE demonstration is scheduled to be conducted at the Monaca facility under a RCRA RD&D permit that will allow the treatment of Superfund wastes containing high concentrations of metals, but only negligible concentrations of organics. The major objectives of the SITE technology demonstration are to evaluate: (1) the levels of contaminants in the residual slag and their leaching potential; (2) the efficiency and economics of processing; and (3) the reuse potential for the recovered metal oxides. Approximately 120 tons of contaminated materials are needed for the test. The most likely candidate wastes include mine tailings or smelting waste such as slag, flue dust, and wastewater treatment sludges. Pretreatment may be required to produce a dryer feed and to reduce the particle size.

FOR FURTHER INFORMATION:

EPA Project Manager:
Donald Oberacker and Marta K. Richards
U.S. EPA
Risk Reduction Engineering Laboratory
26 West Martin Luther King Drive
Cincinnati, Ohio 45268
513-569-7510 and 513-569-7783
FTS: 684-7510 and FTS: 684-7783

Technology Developer Contact:
John F. Pusateri
Horsehead Resource Development Co., Inc.
300 Frankfort Road
Monaca, Pennsylvania 15061
412-773-2279

IM-TECH
[formerly Hazcon]
(Solidification/Stabilization)

TECHNOLOGY DESCRIPTION:

This treatment technology immobilizes contaminants in soils or sludges by binding them into a concrete-like, leach-resistant mass. The technology mixes hazardous wastes, cement or flyash, water, and a patented additive called Chloranan that encapsulates organic and inorganic molecules.

Contaminated soils or sludges can be excavated and/or treated in-situ. If excavated, the waste is screened for oversized material and fed into a field blending unit. The blending unit may consist of concrete ready-mix trucks or huge batch plants capable of blending 100 tons per hour.

First, the Chloranan and water are added to the blending unit. Next, the waste is added and the ingredients mixed for about one minute. Finally, the cement or flyash is added and the whole mass mixed for a final minute. After 12 hours, the treated output hardens into a concrete-like mass that binds and immobilizes the contaminant.

WASTE APPLICABILITY:

This technology is suitable for soils and sludges contaminated with organic compounds, heavy metals, oil and grease. These wastes can be treated together or individually. Stabilization processes have been designated Best Demonstrated Available Technology (BDAT) for metal wastes.

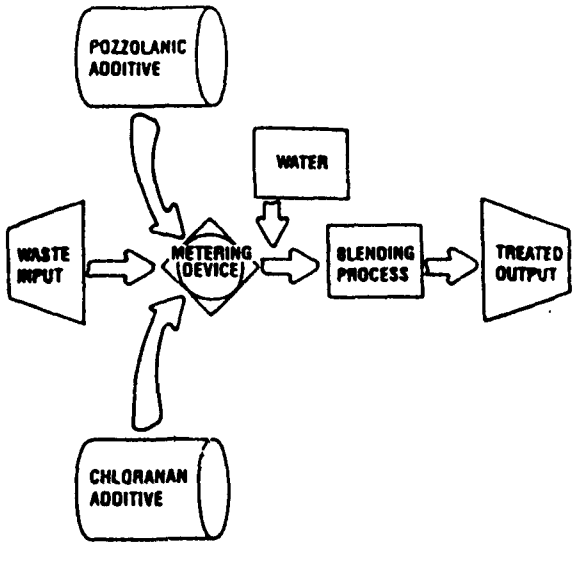

Figure 1. Solidification/stabilization process diagram.

STATUS:

The technology was demonstrated in October 1987 at a former oil reprocessing plant in Douglassville, Pennsylvania. The site contained high levels of oil and grease (25%) and heavy metals (2.2% lead), and low levels of VOCs (100 ppm) and PCBs (75 ppm). A Technology Evaluation Report (September 1988) and Applications Analysis Report (May 1990) describing the completed demon- stration are available. A report on long-term monitoring will be completed by 1990.

Since the demonstration, the technology has been used to remediate a sludge with 85% oil from a refinery lagoon in Alaska; several organic sludges for refineries on the Gulf Coast; and a California Superfund site contaminated with very high levels of heavy metals.

DEMONSTRATION RESULTS:

The comparison of the 7-day, 28-day, 9 month, and 22-month sample test results for the soil are generally favorable. The physical test results were very good, with unconfined compressive strength between 220 to 1570 psi. Very low permeabilities were recorded, and the porosity of the treated wastes was moderate. Durability test results showed no change in physical strength after the wet/dry and freeze/thaw cycles. The waste volume increased by about 120%. However, refinements on the technology now restrict volumetric increases to the 15-25% range. Using less additives reduces strength, but toxicity reduction is not affected. There appears to be an inverse relationship between physical strength and the waste organic concentration.

The results of the leaching tests were mixed. The TCLP results of the stabilized wastes were very low; essentially all values of metals, volatile organics and semivolatile organics were below 1 ppm. Lead leachate concentrations dropped by a factor of 200 to below 100 ppb. Volatile and semivolatile organic concentrations, however, did not change from the untreated soil TCLP. Oil and grease concentrations were greater in the treated waste TCLPs than in the untreated waste, from less than 2 ppm up to 4 ppm.

APPLICATIONS ANALYSIS SUMMARY:

- The process can solidify contaminated material with high concentrations (up to 25%) of organics. However, organic contaminants, including volatiles and base/neutral extractables, were not immobilized to any significant extent.
- Heavy metals were immobilized. In many instances, leachate reductions were greater than 100 fold.
- The physical properties of the treated waste exhibited high unconfined compressive strengths, low permeabilities, and good weathering properties.
- The volume of treated soils increased.
- The process was economical, with costs ranging from $40-60 per ton for processing heavy metals waste, and between $75-100 for wastes with heavy organic content.

FOR FURTHER INFORMATION:

EPA Project Manager:
Paul R. dePercin
U.S. EPA
Risk Reduction Engineering Laboratory
26 West Martin Luther King Drive
Cincinnati, Ohio 45268
513-569-7797
FTS: 684-7797

Technology Developer Contact:
Ray Funderburk
IM-TECH
Route 1, Box 250
Oakwood, Texas 75855
1-800-227-6543

IN-SITU FIXATION COMPANY
(In-Situ Bioremediation Process)

TECHNOLOGY DESCRIPTION:

This process increases the quality and acceleration of biodegradation in contaminated soils. The specialized equipment system injects site-specific microorganism mixtures, along with the required nutrients, and homogeneously mixes them into the contami-nated soils. The injection and mixing process effectively breaks down fluid and soil strata barriers and eliminates pockets of contaminated soil that would otherwise remain untreated.

The process uses a twin, 5-foot diameter auger system powered and moved by a standard backhoe. The auger drills into contaminated soil with hollow shafts, allowing the microorganism and nutrient mixture to pass.

The allocation of the microorganisms and nutrients occurs during the initial auger action. The auger flights break the soil loose, allowing mixing blades to thoroughly blend the microorganism and nutrient mixture with the soil. This occurs in an overlapping manner, to ensure the complete treatment of all contaminated soil. The mixing action is continued as the augers are withdrawn. Treatment depth can exceed 100 feet.

Water, nutrients, and bacteria are added to the contaminant area as needed.

WASTE APPLICABILITY:

The process is applicable to contaminated soils. Different contaminants may have different degrees of success. High concentrations of heavy metals, non-biodegradable toxic organics, alkaline conditions, or acid conditions could interfere with the degradation process. Although volatiles may volatilize during remediation, it has been minimized by adding a hood around the auger assembly and treating the captured gases.

The Dual Auger System was also developed for the treatment of inorganic contaminated soils, by injecting reagent slurry into the soil to solidify/stabilize contaminated waste.

STATUS:

This technology was accepted into the SITE Program in June 1990. EPA is currently locating a site to demonstrate this project.

FOR FURTHER INFORMATION:

EPA Project Manager:
Edward J. Opatken
U.S. EPA
Risk Reduction Engineering Laboratory
26 West Martin Luther King Drive
Cincinnati, Ohio 45268
513-569-7855
FTS: 684-7855

Technology Developer Contact:
Richard P. Murray
In-Situ Fixation Company
P.O. Box 516
Chandler, Arizona 85244-0516
602-821-0409

INTERNATIONAL ENVIRONMENTAL TECHNOLOGY/ YWC MIDWEST (Geolock/Bio-Drain Treatment Platform)

TECHNOLOGY DESCRIPTION:

The Geolock/Bio-drain treatment platform is a bioremediation system that is installed in the soil or waste matrix. The technology can be adapted to the soil characteristics of the area, the concentration of contaminants, and geologic formations. The system is composed of an in-situ tank, an application system, and a bottom water recovery system.

The tank, an in-situ structure, is composed of high density polyethylene (HDPE), sometimes in conjunction with a slurry wall. An underlying permeable waterbearing zone facilitates the creation of ingradient water flow conditions. The tank defines the treatment area, minimizes intrusion of off-site clean water, minimizes the potential for release of bacterial cultures to the aquifer, and keeps contaminant concentration levels that facilitate treatment. The ingradient conditions also facilitate reverse leaching or soil washing.

The application system, called Bio-drain, is installed within the treatment area. Bio-drain delivers bacterial cultures, nutrients, and oxygen or any other proprietary chemical to the soil profile. Bio-drain acts to aerate the soil column and any standing water. This creates an aerobic environment in the air pore spaces of the soil. The cost of installation is low, and Bio-drains can be placed in very dense configurations.

Existing wells or new wells are used to create the water recovery system for removal of contaminated soil washing water. By controlling the water levels within the tank, reverse leaching or soil washing and the volume of off-site clean water entering the system can be controlled and minimized. This minimizes the potential for off-migration. It also creates a condition such that the direction of existing contaminants and bacterial degradation products is toward the surface.

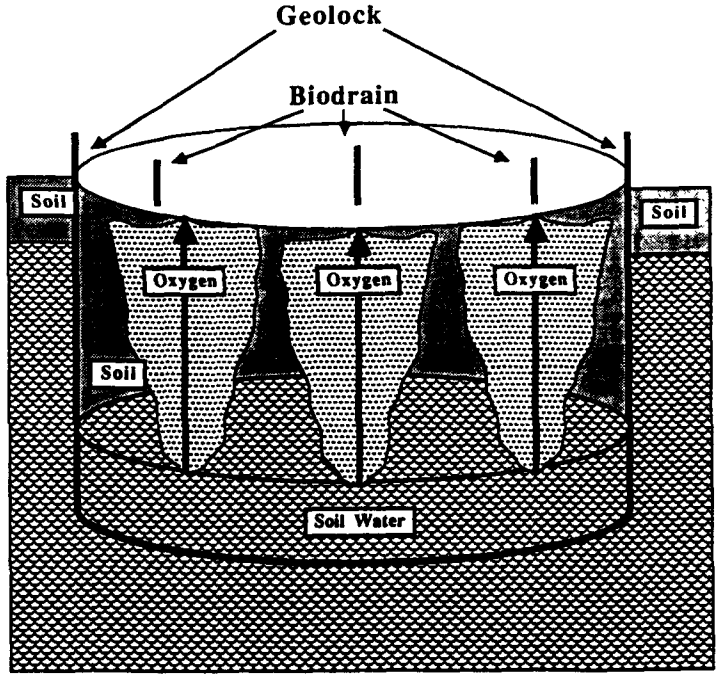

Figure 1. Geolock / Biodrain

Conventional biological treatment is limited by the depth of soil aeration, the need for physical stripping, or the need to relocate the contaminated media to an aboveground treatment system. The Geolock/Bio-drain treatment platform surpasses these limitations as well as reduces or eliminates the health risks associated with excavation and air releases from other treatment technologies.

WASTE APPLICABILITY:

All types and concentrations of biodegradable contaminants can be treated by this system. Through direct degradation or cometabolism, microorganisms can degrade most organic substances. Only a limited number of compounds, such as Arochlor 1254 and 1260 (PCBs) are resistant to biodegradation. Also, this technology may not be applicable to constituents resistent to degradation, including 1,4 dioxane and high concentrations of heavy metals.

Extremely dense clays may be difficult to treat with this technology. Rock shelves or boulders may render installation impossible.

STATUS:

The technology was accepted into the SITE Demonstration Program in August 1990. Preparation of the Quality Assurance Project Plan and site selection have begun.

FOR FURTHER INFORMATION:

EPA Project Manager:
Randy Parker
U.S. EPA
Risk Reduction Engineering Laboratory
26 West Martin Luther King Drive
Cincinnati, Ohio 45268
513-569-7271
FTS: 684-7271

Technology Developer Contact:
Lynn D. Sherman
YWC Midwest and IET
6490 Promler Avenue, N.W.
North Canton, Ohio 44720
216-499-8181

INTERNATIONAL WASTE TECHNOLOGIES/GEO-CON, INC.
(In-Situ Solidification/Stabilization Process)

TECHNOLOGY DESCRIPTION:

This in-situ solidification/stabilization technology immobilizes organic and inorganic compounds in wet or dry soils, using reagents (additives) to produce a cement-like mass. The basic components of this technology are: (1) Geo-Con's deep soil mixing system (DSM), a system to deliver and mix the chemicals with the soil in-situ; and (2) a batch mixing plant to supply the International Waste Technologies' (IWT) proprietary treatment chemicals (Figure 1).

The proprietary additives generate a complex, crystalline, connective network of inorganic polymers. The structural bonding in the polymers is mainly covalent. The process involves a two-phased reaction in which the contaminants are first complexed in a fast-acting reaction, and then in a slow-acting reaction, where the building of macromolecules continues over a long period of time. For each type of waste, the amount of additives used varies. Treatability tests are recommended.

The DSM system involves mechanical mixing and injection. The system consists of one set of cutting blades and two sets of mixing blades attached to a vertical drive auger, which rotates at approximately 15 rpm. Two conduits in the auger are used to inject the additive slurry and supplemental water. Additive injection occurs on the downstroke; further mixing takes place upon auger withdrawal. The treated soil columns are 36 inches in diameter, and are positioned in an overlapping pattern of alternating primary and secondary soil columns.

WASTE APPLICABILITY:

The IWT technology can be applied to soils, sediments, and sludge-pond bottoms contaminated with organic compounds and metals. The technology has been laboratory-tested on soils containing PCBs, pentachlorophenol, refinery wastes, and chlorinated and nitrated hydrocarbons.

The DSM system can be used in almost any soil type; however, mixing time increases with fines. It can be used below the water table and in soft rock formations. Large obstructions must be avoided.

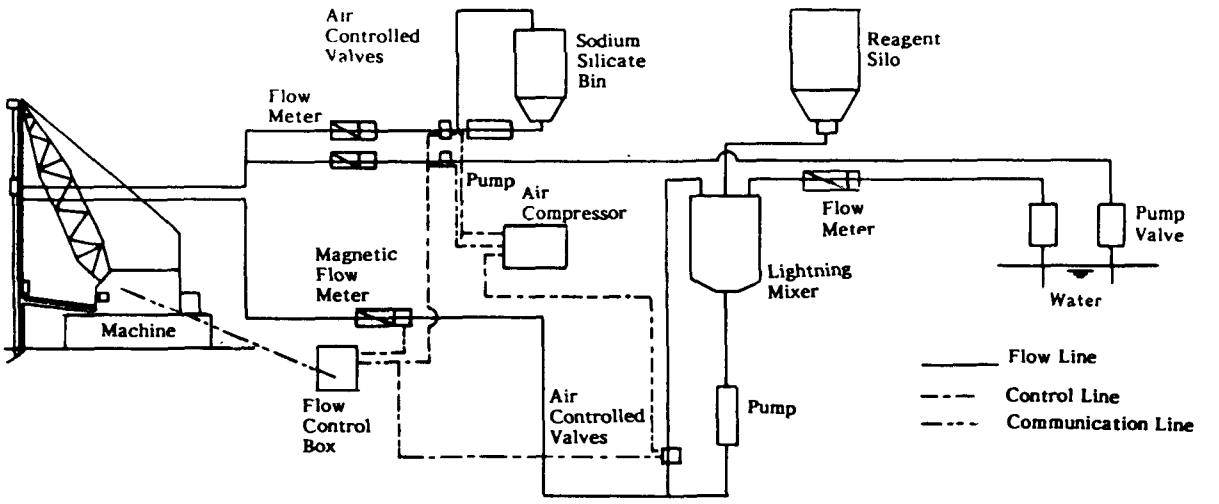

Figure 1. In-situ stabilization batch mixing plant process diagram.

STATUS:

A SITE demonstration was conducted at a PCB-contaminated site in Hialeah, Florida, in April 1988. Two 10 x 20-foot test sectors of the site were treated -- one to a depth of 18 feet, and the other to a depth of 14 feet. Ten months after the demonstration, long-term monitoring tests were performed on the treated sectors. The Technology Evaluation Report and Applications Analysis Report have been published.

DEMONSTRATION RESULTS:

- Immobilization of PCBs appears likely, but could not be confirmed because of low PCB concentrations in the untreated soil. Leachate tests on treated and untreated soil samples showed mostly undetectable PCB levels. Leachate tests performed one year later on treated soil samples showed no increase in PCB concentrations, indicating immobilization.
- Sufficient data were not available to evaluate the performance of the system with regard to metals or other organic compounds.
- Each of the test samples showed high unconfined compressive strength, low permeability, and low porosity. These physical properties improved when retested one year later, indicating the potential for long-term durability.
- The bulk density of the soil increased 21% after treatment. This increased the volume of treated soil by 8.5% and caused a small ground rise of one inch per treated foot of soil.
- The unconfined compressive strength (UCS) of treated soil was satisfactory, with values up to 1,500 psi.
- The permeability of the treated soil was satisfactory, decreasing four orders of magnitude compared to the untreated soil, or 10^{-6} and 10^{-7} compared to 10^{-2} cm/sec.
- The wet/dry weathering test on treated soil was satisfactory. The freeze/dry weathering test of treated soil was unsatisfactory.
- The microstructural analysis, scanning electron microscopy (SEM), optical microscopy, and x-ray diffraction (XRD), showed that the treated material was dense, non-porous, and homogeneously mixed.
- The Geo-Con DSM equipment operated reliably.

APPLICATIONS ANALYSIS SUMMARY:

This technology was demonstrated at a site composed primarily of unconsolidated sand and limestone. Conclusions are:

- Microstructural analyses of the treated soils indicated a potential for long-term durability. High unconfined compressive strengths and low permeabilities were recorded.
- Data provided by IWT indicate some immobilization of volatile and semivolatile organics. This may be due to organophilic clays present in the IWT reagent. There are insufficient data to confirm this immobilization.
- Performance data are limited outside of SITE demonstrations. The developer modifies the binding agent for different wastes. Treatability studies should be performed for specific wastes.
- The process is economic: $194 per ton for the 1-auger machine used in the demonstration; $111 per ton for a commercial 4-auger operation.

FOR FURTHER INFORMATION:

EPA Project Manager:
Mary K. Stinson
U.S. EPA, RREL
Woodbridge Avenue
Edison, New Jersey 08837
908-321-6683

Technology Developer Contacts:
Jeff P. Newton
International Waste Technologies
150 North Main Street, Suite 910
Wichita, Kansas 67202
316-269-2660

Brian Jasperse
Geo-Con, Inc.
P.O. Box 17380
Pittsburgh, PA 15235
412-856-7700

OGDEN ENVIRONMENTAL SERVICES
(Circulating Bed Combustor)

TECHNOLOGY DESCRIPTION:

The Circulating Bed Combustor (CBC) uses high velocity air to entrain circulating solids and create a highly turbulent combustion zone for the efficient destruction of toxic hydrocarbons. The commercial-size combustion chamber (36 inches in diameter) can treat up to 100 tons of contaminated soil daily, depending on the heating value of the feed material.

The CBC technology operates at relatively low temperatures (approximately 1600° F), thus reducing operation costs. The high turbulence produces a uniform temperature around the combustion chamber, hot cyclone, and return leg. It also promotes the complete mixing of the waste material during combustion. The effective mixing and relatively low combustion temperature also reduce emissions of carbon monoxide and nitrogen oxides.

As shown on Figure 1, waste material and limestone are fed into the combustion chamber along with the recirculating bed material from the hot cyclone. The limestone neutralizes acid gases. The treated ash is transported out of the system by an ash conveyor for proper disposal.

Hot gases produced during combustion pass through a convective gas cooler and baghouse before being released to the atmosphere. Ogden states that the CBC technology can attain a destruction and removal efficiency (DRE) of 99.99% for hazardous waste and 99.9999% for PCB waste.

WASTE APPLICABILITY:

The CBC technology may be applicable to soils, slurries, and sludges contaminated with halogenated and nonhalogenated hydrocarbons. The CBC technology was recently applied at two site remediation projects for treating soils contaminated with PCBs and fuel oil.

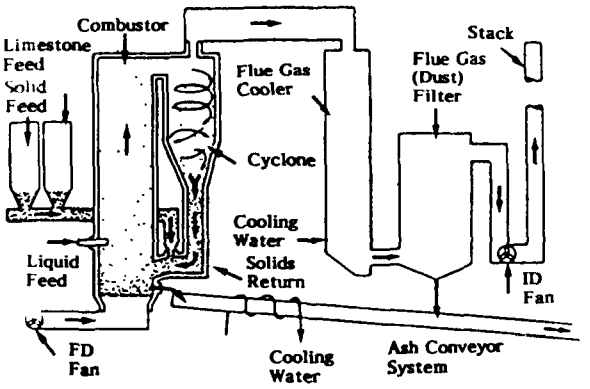

Figure 1. CBC process diagram.

STATUS:

The CBC technology is one of seven nationwide incinerators permitted to burn PCBs. A test burn/treatability study of waste from the McColl Superfund site was conducted in March 1989. Results from this pilot-scale demonstration are currently being reviewed by EPA.

FOR FURTHER INFORMATION:

EPA Project Manager:
Joseph McSorley
U.S. EPA
Air & Energy Engineering
Research Laboratory
Alexander Drive
Research Triangle Park, NC 27711
919-541-2920
FTS: 629-2920

Technology Developer Contact:
Brian Baxter
Ogden Environmental Services
10955 John J. Hopkins Drive
San Diego, California 92121
619-455-2613

QUAD ENVIRONMENTAL TECHNOLOGIES CORPORATION (Chemtact™ Gaseous Waste Treatment)

TECHNOLOGY DESCRIPTION:

The Chemtact™ system uses gas scrubber technology to remove gaseous organic and inorganic contaminants through efficient gas-liquid contacting. Droplets of a controlled chemical solution are dispersed by atomizing nozzles within the scrubber chamber. Very small droplet sizes (less than 10 microns), along with a longer retention time than traditional scrubbers, results in a once-through system that generates low volumes of liquid residuals. These residuals are then treated subsequently by conventional techniques.

Gas scrubbing is a volume reduction technology that transfers contaminants from the gas phase to a liquid phase. The selection of absorbent liquid is based on the chemical characteristics of the contaminants.

Two mobile pilot units are currently available: a two-stage, 800 cubic feet per minute (cfm) system; and a one-stage, 2,500 cfm system. This equipment is trailer-mounted and can be transported to waste sites.

WASTE APPLICABILITY:

This technology can be used on gaseous waste streams containing a wide variety of organic or inorganic contaminants, but is best suited for volatile organic compounds. The system is applicable for use with source processes that generate a contaminated gaseous exhaust, such as air stripping of ground water or leachate, soil aeration, or exhausts from driers or incinerators.

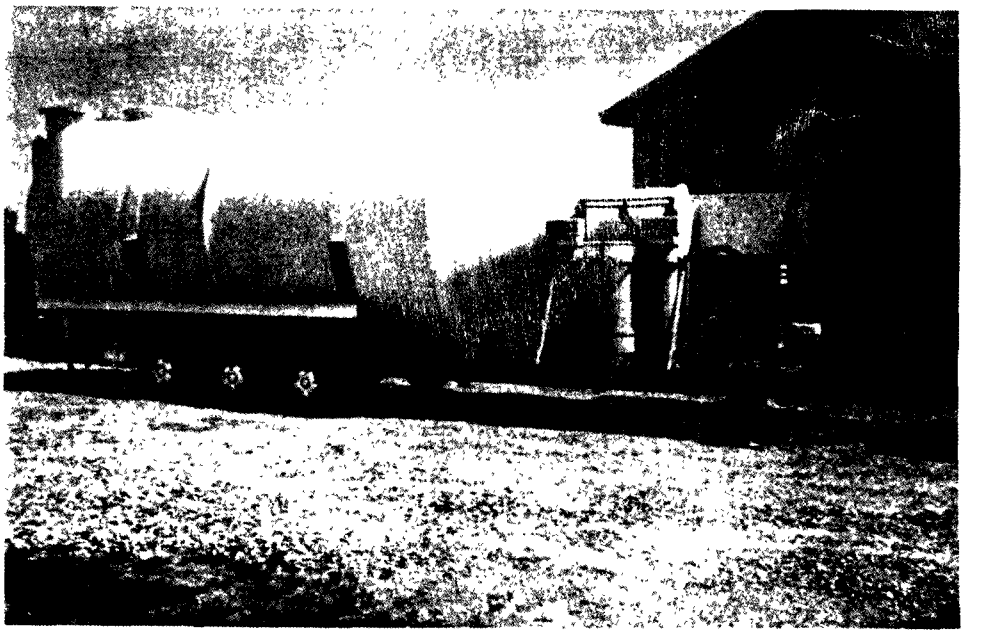

Figure 1. Mobile 2,500 CFM pilot scrubbing unit.

STATUS:

EPA is currently locating a suitable site to demonstrate this technology.

FOR FURTHER INFORMATION:

EPA Project Manager:
Ronald Lewis
U.S. EPA
Risk Reduction Engineering Laboratory
26 West Martin Luther King Drive
Cincinnati, Ohio 45268
513-569-7856
FTS: 684-7856

Technology Developer Contact:
Harold J. Rafson
Quad Environmental Technologies Corporation
3605 Woodhead Drive, Suite #103
Northbrook, Illinois 60062
312-564-5070

RECYCLING SCIENCES INTERNATIONAL, INC.
[formerly American Toxic Disposal]
(Desorption and Vapor Extraction System)

TECHNOLOGY DESCRIPTION:

The Desorption and Vapor Extraction System (DAVES) uses a low-temperature, fluidized bed to remove organic and volatile inorganic compounds from soils, sediments, and sludges. Contaminated materials are fed into a co-current, fluidized bed, where they are well mixed with hot air (about 1,000 to 1,400° F) from a gas-fired heater (Figure 1). Direct contact between the waste material and the hot air forces water and contaminants from the waste into the gas stream at a relatively low fluidized-bed temperature (about 320 ° F). The heated air, vaporized water and organics, and entrained particles flow out of the dryer to a gas treatment system.

The gas treatment system removes solid particles, vaporized water, and organic vapors from the air stream. A cyclone separator and baghouse remove most of the particulates in the gas stream from the dryer. Vapors from the cyclone separator are cooled in a venturi scrubber, counter-current washer, and chiller section before they are treated in a vapor-phase carbon adsorption system. The liquid residues from the system are centrifuged, filtered, and passed through two activated carbon beds arranged in series.

By-products from the DAVES treatment include: (1) approximately 96 to 98 percent of solid waste feed as clean, dry solid; (2) a small quantity of centrifuge sludge containing organics; (3) a small quantity of spent adsorbent carbon; (4) wastewater that may need further treatment; and (5) small quantities of baghouse and cyclone dust.

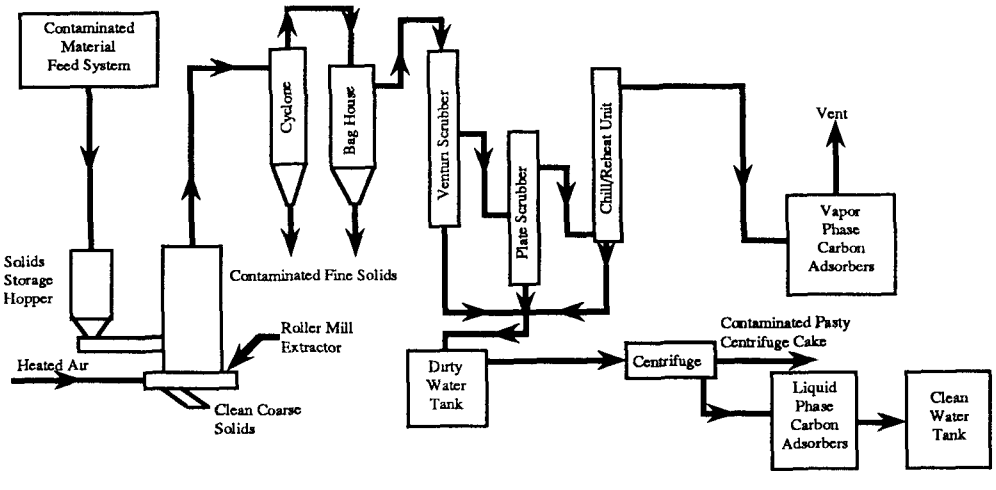

Figure 1. Process flow diagram.

WASTE APPLICABILITY:

This technology can remove volatile and semivolatile organics, including polychlorinated biphenyls (PCBs), polynuclear aromatic hydrocarbons (PAHs), and pentachlorophenol (PCP), volatile inorganics (tetraethyl lead), and some pesticides from soil, sludge, and sediment, In general, the process treats waste containing less than 5 percent total organic contaminants and 30 to 90 percent solids. Nonvolatile inorganic contaminants (such as metals) in the waste feed do not inhibit the process but are not treated.

STATUS:

EPA is currently selecting a demonstration site for this process. The wastes preferred for the demonstration are harbor or river sediments containing at least 50 percent solids and contaminated with PCBs and other volatile or semivolatile organics. Soil with these characteristics may also be acceptable. About 300 tons of waste are needed for a two-week test. The demonstration may potentially be held at the selected demonstration site or wastes may be transported to a facility in Arizona that is owned by the developer. Major test objectives are to evaluate feed handling, decontamination of solids, and treatment of gases generated by the process.

FOR FURTHER INFORMATION:

EPA Project Manager:
Laurel Staley
U.S. EPA
Risk Reduction Engineering LAboratory
26 West Martin Luther King Drive
Cincinnati, Ohio 45268
513-569-7863
FTS: 684-7863

Technology Developer Contact:
William C. Meenan
Recycling Sciences International, Inc.
30 South Wacker Drive
Suite 1420
Chicago, IL 60606
312-559-0122

REMEDIATION TECHNOLOGIES, INC.
[formerly Motec, Inc.]
(Liquid/Solid Contact Digestion)

TECHNOLOGY DESCRIPTION:

This process uses liquid-solid contact digestion (LSCD) to biodegrade organic wastes. Organic materials and water are placed in a high energy environment, in which the organic constituents are then biodegraded by acclimated microorganisms.

The system consists of two or three portable tank digesters or lagoons (Figure 1): (1) a primary contact or mixing tank; (2) a primary digestion tank; and (3) a polishing tank. Treatment time may be ten days or more, depending on the type and concentration of the contaminants and the temperature in the tanks.

In the primary contact tank, water is mixed with influent sludge or soil. The mixing process is designed to achieve a 20 to 25 percent solids concentration. Water is obtained either from the contaminated source or a fresh water source. Emulsifying chemicals may be added, and pH is adjusted to increase the solubility of the organic phase. After water is added, the batch mixture is transferred to the primary digestion tank, where acclimated seed bacteria are added, and aerobic biological oxidation is initiated. Most of the biological oxidation occurs during this phase.

When the biodegradation reactions decrease significantly, the batch mixture is transferred

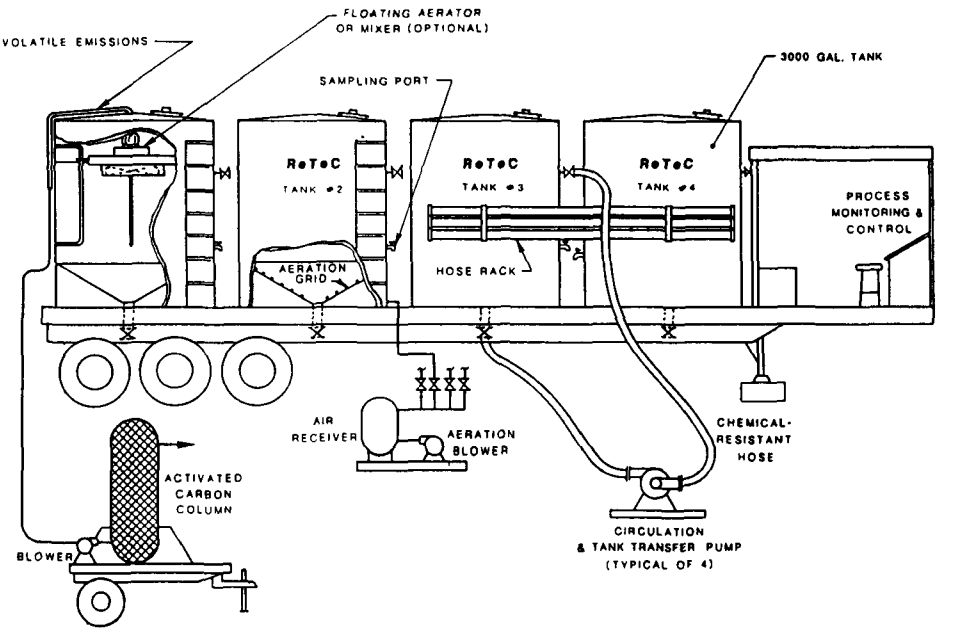

Figure 1. Mobile pilot-scale liquid solids contact treatment system.

to the polishing tank for final treatment. Once the pH has been readjusted in the polishing cell, co-metabolites and nutrients are added to maintain and enhance the biomass. In this phase, organic constituents are degraded to target concentration levels. Because the system runs on a negative water balance, water is added throughout the process. Once target levels are reached, the supernatant from the polishing tank is recycled to the primary contact tank, and biological sludge is treated in prepared bed solid phase bioreactors.

WASTE APPLICABILITY:

The technology is suitable for treating halogenated and nonhalogenated organic compounds, including some pesticides and herbicides. LSCD has been demonstrated on liquids, sludges, and soils with high organic concentrations.

STATUS:

The developer is seeking private party co-funding for a 3 to 4 month demonstration on petroleum or coal tar derived wastes.

FOR FURTHER INFORMATION:

EPA Project Manager:
Ronald Lewis
U.S. EPA
Risk Reduction Engineering Laboratory
26 West Martin Luther King Drive
Cincinnati, Ohio 45268
513-569-7856
FTS: 684-7856

Technology Developer Contact:
Randy Kabrick
Remediation Technologies, Inc.
1301 West 25th Street, Suite 406
Austin, TX 78759
512-477-8661

RESOURCES CONSERVATION COMPANY
(BEST Solvent Extraction)

TECHNOLOGY DESCRIPTION:

Solvent extraction is potentially effective in treating oily sludges and soils contaminated with hydrocarbons by separating the sludges into three fractions: oil, water, and solids. As the fractions separate, contaminants are partitioned into specific phases. For example, PCBs are concentrated in the oil fraction, while metals are separated into the solids fraction. The overall volume and toxicity of the original waste solids are thereby reduced and the concentrated waste streams can be efficiently treated for disposal.

The BEST process is a mobile solvent extraction system that uses one or more secondary or tertiary amines (usually triethylamine (TEA)) to separate hydrocarbons from soils and sludges. The BEST technology is based on the fact that TEA is completely soluble in water at temperatures below 20° C.

Because TEA is flammable in the presence of oxygen, the treatment system must be sealed from the atmosphere and operated under a nitrogen blanket. Prior to treatment, it is necessary to raise the pH of the waste material to greater than 10, creating an environment where TEA will be conserved effectively for recycling through the process. This pH adjustment may be accomplished by adding sodium hydroxide. Pretreatment also includes screening the contaminated feed solids to remove cobbles and debris for smooth flow through the process.

The BEST process begins by mixing and agitating the cold solvent and waste in a washer/dryer (Figure 1). The washer/dryer is a horizontal steam-jacketed vessel with rotating paddles. Hydrocarbons and water in the waste simultaneously solvate with the cold TEA, creating a homogeneous mixture. As the solvent breaks the oil-water-solid bonds in the

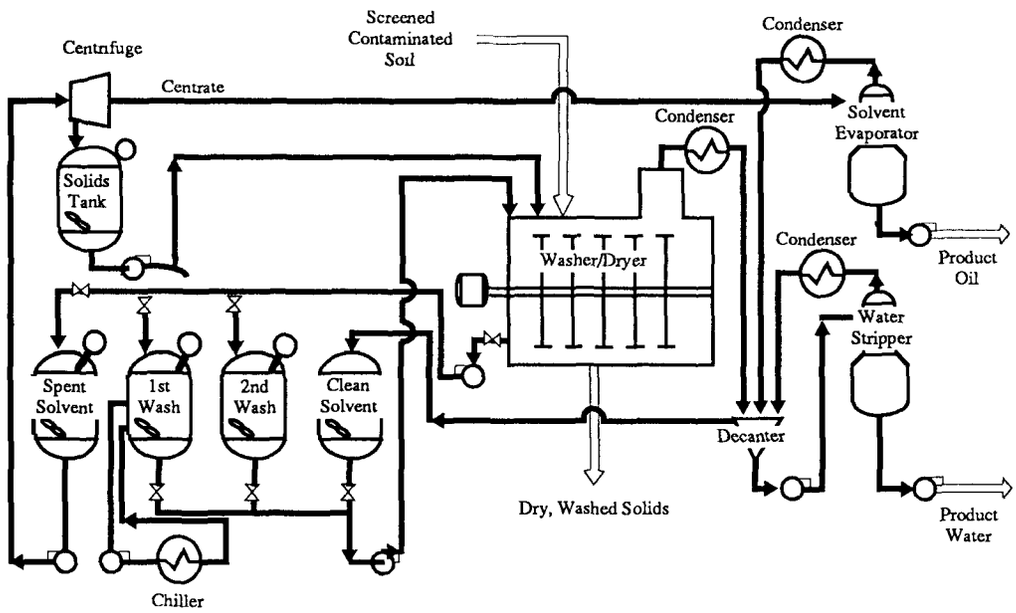

Figure 1. BEST soil cleanup unit schematic.

waste, the solids are released and allowed to settle by gravity. The solvent mixture is decanted and fine particles are removed by centrifuging. The resulting dry solids have been cleansed of hydrocarbons but contain most of the original waste's heavy metals, thus requiring further treatment prior to disposal.

The liquids from the washer/dryer vessels containing the hydrocarbons and water extracted from the waste are heated. As the temperature of the liquids increases, the water separates from the organics and solvent. The organics-solvent fraction is decanted and sent to a stripping column, where the solvent is recycled and the organics are discharged for recycling or disposal. The water phase is passed to a second stripping column, where residual solvent is recovered for recycling. The water is typically discharged to a local wastewater treatment plant.

The BEST technology is modular, allowing for on-site treatment. Based on the results of many bench-scale treatability tests, the process significantly reduces the hydrocarbon concentration in the solids. Other advantages of the technology include the production of dry solids, the recovery and reuse of soil, and waste volume reduction. By removing organic contaminants, the process reduces the overall toxicity of the solids and water streams. It also concentrates the contaminants into a smaller volume, allowing for efficient final treatment and disposal.

WASTE APPLICABILITY:

The BEST process is applicable for most organics or oily contaminants in sludges or soils, including PCBs (see Table 1). Performance can be influenced by the presence of detergents and emulsifiers, low pH materials, and reactivity of the organics with the solvent.

Table 1
SPECIFIC WASTES CAPABLE OF TREATMENT USING SOLVENT EXTRACTION

RCRA Listed Hazardous Wastes

- Creosote-Saturated Sludge
- Dissolved Air Flotation (DAF) Float
- Slop Oil Emulsion Solids
- Heat Exchanger Bundle Cleaning Sludge
- API Separator Sludge
- Tank Bottoms (Leaded)

Non-Listed Hazardous Wastes

- Primary Oil/Solids/Water Separation Sludges
- Secondary Oil/Solids/Water Separation Sludges
- Bio-Sludges
- Cooling Tower Sludges
- HF Alkylation Sludges
- Waste FCC Catalyst
- Spent Catalyst
- Stretford Unit Solution
- Tank Bottoms
- Treated Clays

STATUS:

The first full-scale BEST unit was used at the General Refining Superfund site in Garden City, Georgia. Solvent extraction is the selected remedial action at the Pinnete's Salvage site in Maine and is the preferred alternative at the F. O'Connor site in Maine.

The demonstration of the BEST process under the SITE Program is pending selection of an appropriate site.

FOR FURTHER INFORMATION:

EPA Project Manager:
Edward Bates
U.S. EPA
Risk Reduction Engineering Laboratory
26 West Martin Luther King Drive
Cincinnati, Ohio 45268
513-569-7774
FTS: 684-7774

Technology Developer Contact:
Paul McGough
Resources Conservation Company
3006 Northup Way
Bellevue, Washington 98004
206-828-2400

RETECH, INC.
(Plasma Reactor)

TECHNOLOGY DESCRIPTION:

The Centrifugal Reactor is a thermal treatment technology that uses heat from a plasma torch to create a molten bath, which detoxifies contaminants in soils. Organic contaminants are vaporized and react at very high temperatures to form innocuous products. Solids melt and are incorporated into the molten bath. Metals are retained in this phase. When cooled, this phase is a non-leachable matrix.

As the diagram of the reactor (Figure 1) shows, contaminated soils enter through the bulk feeder. The interior of the reactor (the reactor well) rotates during waste processing. Centrifugal force created by this rotation prevents waste and molten material from flowing out of the reactor through the bottom. It also helps to transfer heat and electrical energy evenly throughout the molten phase. Periodically, a fraction of the molten slag is tapped, falling into the collection chamber to solidify.

Gases travel through the secondary combustion chamber, where they remain at a high temperature for an extended period of time. This allows for further thermal destruction of any organics remaining in the gas phase. Downstream of the secondary combustion chamber, the gases pass through a series of air pollution control devices designed to remove particulates and acid gases. In the event of a process upset, a surge tank has been installed to allow for the reprocessing of any off-gases produced.

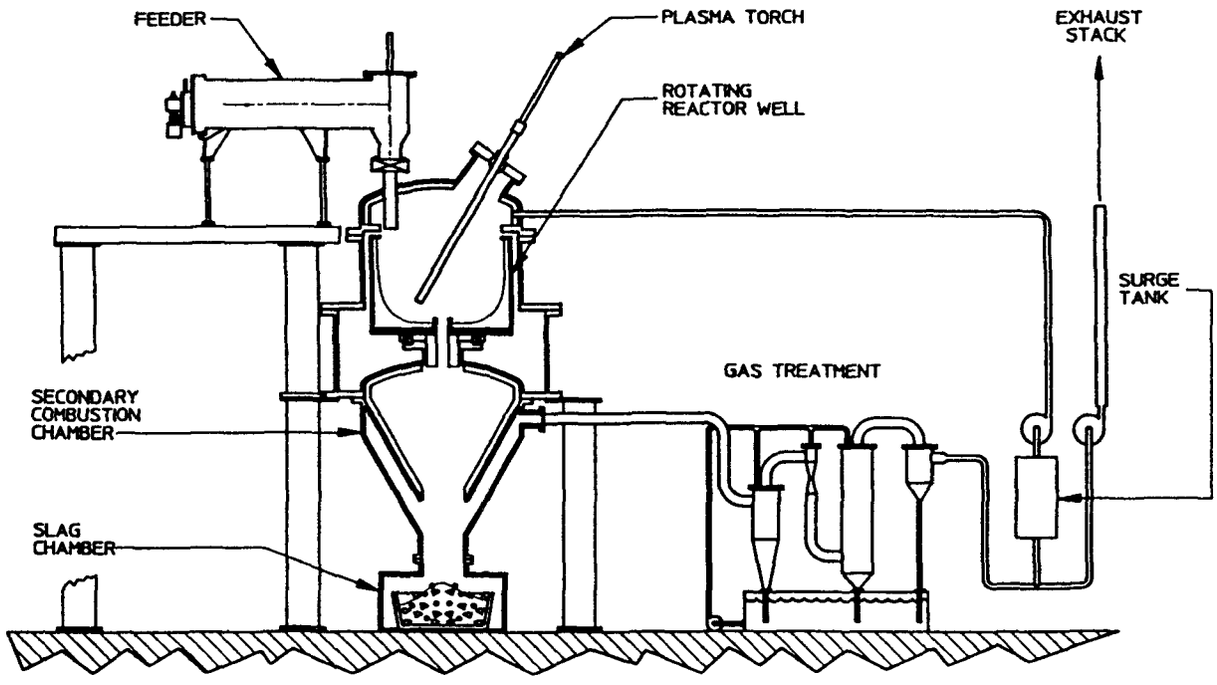

Figure 1. Plasma Reactor Process Diagram.

WASTE APPLICABILITY:

Liquid and solid organic compounds can be treated by this technology. It is most appropriate for soils and sludges contaminated with metals and hard-to-destroy organic compounds.

STATUS:

A demonstration is planned for late 1990 at a Department of Energy research facility in Butte, Montana. During the demonstration, the reactor will process approximately 4,000 pounds of waste at a feed rate of 100 pounds per hour. All feed and effluent streams will be sampled to assess the performance of this technology. A report on the demonstration project will be available after its completion.

FOR FURTHER INFORMATION:

EPA Project Manager:
Laurel Staley
U.S. EPA
Risk Reduction Engineering Laboratory
26 West Martin Luther King Drive
Cincinnati, Ohio 45268
513-569-7863
FTS: 684-7863

Technology Developer Contact:
R.C. Eschenbach
Retech, Inc.
P.O. Box 997
100 Henry Station Road
Ukiah, California 95482
707-462-6522

RISK REDUCTION ENGINEERING LABORATORY
(Debris Washing System)

TECHNOLOGY DESCRIPTION:

This technology was developed by RREL staff and PEI Associates, Inc. to decontaminate debris currently found at Superfund sites throughout the country. The Debris Washing System (DWS) was demonstrated under the Innovative Program and will be commercialized by PEI Associates, Inc.

The DWS consists of 300-gallon spray and wash tanks, surfactant and rinse water holding tanks, and an oil/water separator. The decontamination solution treatment system includes a diatomaceous earth filter, an activated carbon column, and an ion exchange column. Other required equipment required include pumps, stirrer motor, tank heater, metal debris basket, and particulate filters.

The DWS unit is transported on a 48-foot semitrailer. At the treatment site, the DWS unit is assembled on a 25 by 24 foot concrete pad and enclosed in a temporary shelter.

A basket of debris is placed in the spray tank with a forklift where it is sprayed with an aqueous detergent solution. An array of high pressure water jets blast contaminants and dirt from the debris. Detergent solution is continually recycled through a filter system that cleans the liquid.

The wash and rinse tanks are supplied with water at 140° F, at 60 psig. The contaminated wash solution is collected and treated prior to discharge. An integral part of the technology is treatment of the process detergent solution and rinse water to reduce the contaminant concentration to allowable discharge levels. Process water treatment consists of particulate

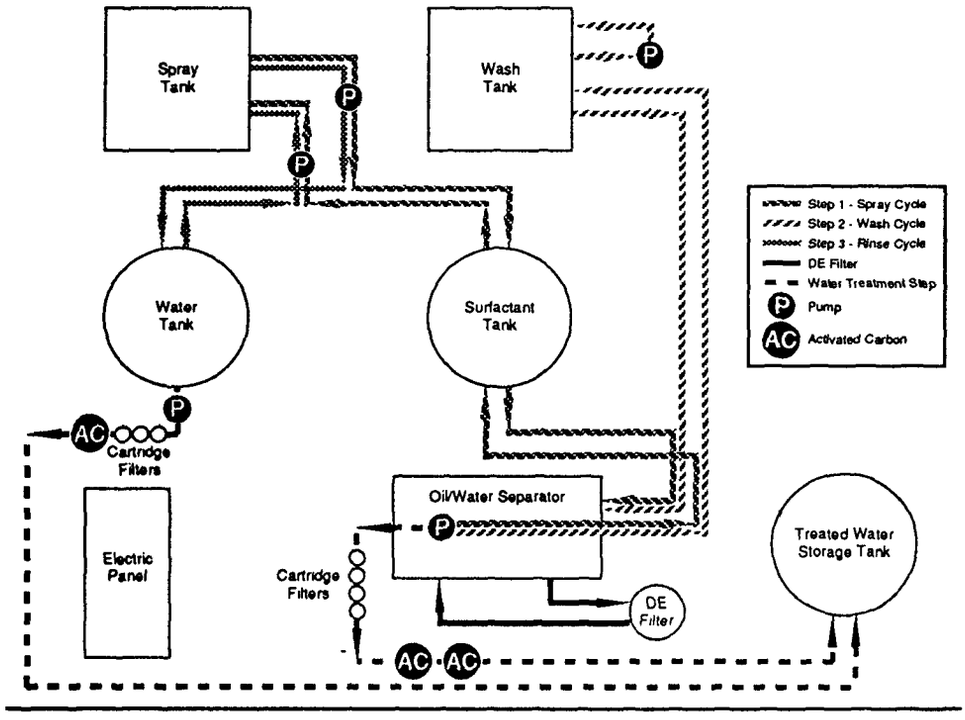

Figure 1. Schematic of the pilot-scale Debris Washing System.

filtration, activated carbon adsorption and ion exchange. Approximately 1,000 gallons of liquid is used during the decontamination process.

WASTE APPLICABILITY:

The DWS can be applied on site to various types of debris (metallic, masonry, or other solid debris) that is contaminated with hazardous chemicals such as pesticides, polychlorinated biphenyls, lead, and other metals.

STATUS:

The first pilot-scale testing was performed at the Region 5 Carter Industrial Superfund site in Detroit, MI. PCB reductions averaged 58 percent in batch 1 and 81 percent in batch 2. Design changes were made and tested on the unit prior to additional field testing.

Field-testing occurred using the upgraded pilot-scale DWS unit at a Region 4 PCB-contaminated Superfund Site in Hopkinsville, KY, during December 1989. The results were promising. PCB levels on the surfaces of metallic transformer casings were reduced to less than or equal to 10 micrograms PCB/100 cm2. All 75 contaminated transformer casings on-site were decontaminated to U.S. EPA acceptable cleanup criteria, and sold by Region 4 to a scrap metal dealer.

The unit was also field tested at another Superfund Site in Region 4, the Shaver's Farm site in Walker County, GA. The contaminants of concern were Dicamba and benzonitrile. Fifty-five gallon drums cut into sections were placed in the DWS and carried through the decontamination process. Results from this study are currently being prepared.

FOR FURTHER INFORMATION:

EPA Project Manager:
Naomi Barkley
U.S. EPA
Risk Reduction Engineering Laboratory
26 West Martin Luther King Drive
Cincinnati, Ohio 45268
513-569-7854
FTS: 684-7854

Technology Developer Contact:
Michael L. Taylor
PEI Associates, Inc.
11499 Chester Road
Cincinnati, OH 45246
513-782-4801

SANIVAN GROUP
(Soil Treatment with Extraksol)

TECHNOLOGY DESCRIPTION:

Extraksol is a mobile solvent extraction technology. This batch process extracts organic contaminants from the soil using nonchlorinated, non-persistent organic solvents. The solvents are regenerated by distillation and the contaminants are concentrated in the distillation residues.

The three treatment steps -- soil washing, soil drying, and solvent regeneration -- occur on a flatbed trailer. The extraction fluid (solvent) is circulated through the contaminated matrix within a tumbling vat to wash the soil. Controlled temperature and pressure optimize the washing procedure. Hot inert gas dries the soil.

The gas vaporizes the residual extract fluid and carries it from the tumbling vat to a condenser, where the solvent is again separated from the gas. The now solvent-free gas is reheated and reinjected into the soil as required for complete drying. After the drying cycle, the decontaminated soil may be returned to its original location.

Distillation of the contaminated solvent achieves two major objectives: (1) it minimizes the amount of solvent required to perform the extraction by regenerating it in a closed loop, and (2) it significantly reduces the volume of contaminants requiring further treatment or off-site disposal by concentrating them in the still bottoms. A schematic of the process is shown in Figure 1.

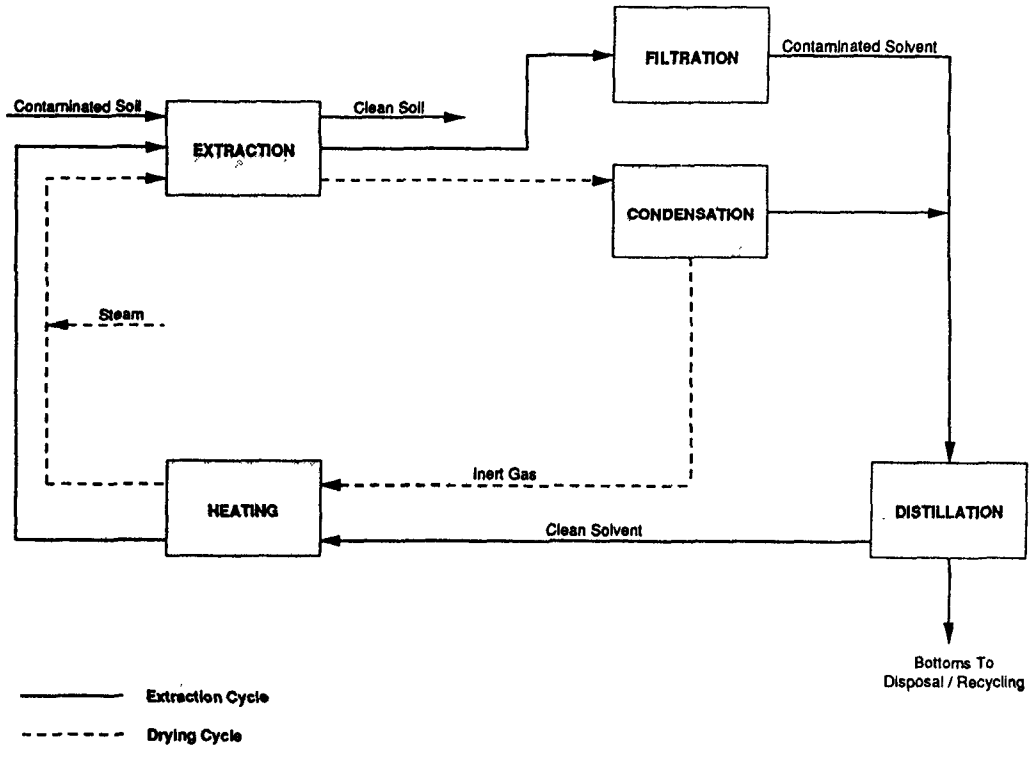

Figure 1. Simplified Schematic of Extraksol ™ Process

WASTE APPLICABILITY:

The process extracts organic contaminants from solids. It has been successfully tested in a number of pilot projects on a range of contaminants, including PCBs, PCP, PAH, MAH, pesticides, oils, and hydrocarbons. The process has the following soil restrictions:

- Maximum clay fraction, 40%
- Maximum water content, 30%
- Maximum size if porous material, 2 inches
- Maximum size if non-porous material, 1-2 feet

STATUS:

This technology was accepted into the SITE program in June 1990.

FOR FURTHER INFORMATION:

EPA Project Manager:
Mark Meckes
U.S. EPA
Risk Reduction Engineering Laboratory
26 West Martin Luther King Drive
Cincinnati, Ohio 45268
513-569-7348
FTS: 684-7348

Technology Developer Contact:
Peter Z. Colak
Sanivan
7777 Boulevard L.H. Lafontaine
Anjou (Quebec)
H1K 4E4
514-355-3351

S.M.W. SEIKO, INC.
(In Situ Solidification/Stabilization)

TECHNOLOGY DESCRIPTION:

The Soil-Cement Mixing Wall (S.M.W.) technology involves the in-situ fixation stabilization and solidification of contaminated soils. Multi-axis overlapping hollow stem augers (Figure 1) are used to inject solidification/stabilization (S/S) agents and blend them with contaminated soils in-situ. The augers are mounted on a crawler-type base machine. A batch mixing plant and raw materials storage tanks are also involved. The machine can treat 90 to 140 cubic yards of soil per 8-hour shift at depths up to 100 feet.

The product of the in-situ S/S technology is a monolithic block down to the treatment depth. The volume increase ranges from 10 to 30 percent, depending on the nature of the soil matrix and the amount of fixation reagents and water required for treatment.

WASTE APPLICABILITY:

This technology is applicable to soils contaminated with metals and semivolatile organic compounds (pesticides, PCBs, phenols, PAHs, etc.).

The technique has been used in mixing soil, cement, or chemical grout for more than 18 years on various construction applications, including cutoff walls and soil stabilization.

STATUS:

This project was accepted into the SITE Demonstration Program in June 1989. Site selection is currently underway.

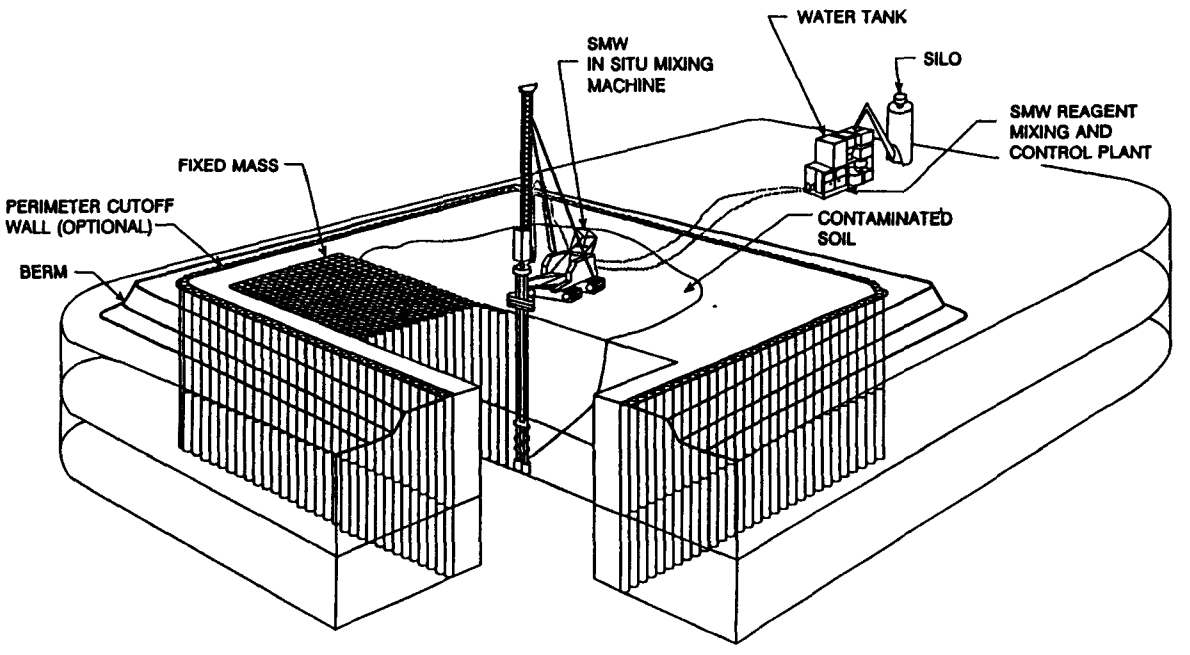

Figure 1. Schematic of SMW In-Situ Fixation of Contaminated Soil at Depth.

FOR FURTHER INFORMATION:

EPA Project Manager:
S. Jackson Hubbard
U.S. EPA
Risk Reduction Engineering Laboratory
26 West Martin Luther King Drive
Cincinnati, Ohio 45268
513-569-7507
FTS: 684-7507

Technology Developer Contact:
David S. Yang
S.M.W. Seiko, Inc.
100 Marine Parkway
Suite 350
Redwood City, California 94065
415-591-9646

SEPARATION AND RECOVERY SYSTEMS, INC. (Solidification/Stabilization)

TECHNOLOGY DESCRIPTION:

This technology uses lime to stabilize sludges with high levels of hydrocarbons. No hazardous materials are used in the process. The lime and other chemicals are specially prepared to significantly improve their reactivity and other key characteristics.

Sludge is removed from a waste pit using conventional earthmoving equipment and mixed with lime in a separate blending pit. The temperature of the material in the blending pit rises for a brief time to about 100° C, creating some steam. After 20 minutes, almost all of the material is fixed, but the chemicals mixed in the sludge continue to react with the waste for days.

The fixed material is stored in a product pile until the waste pit has been cleaned. The waste is then returned to the pit and compacted to a permeability of 10^{-10}cm/sec. The volume of the waste is increased by 30 percent by adding lime.

WASTE APPLICABILITY:

The technology is applicable to acidic sludges containing at least 5 percent hydrocarbons (typical of sludges produced by recycling lubricating oils). The technology can also stabilize waste containing up to 80 percent organics. The process tolerates low levels of mercury and moderate levels of lead and other toxic metals.

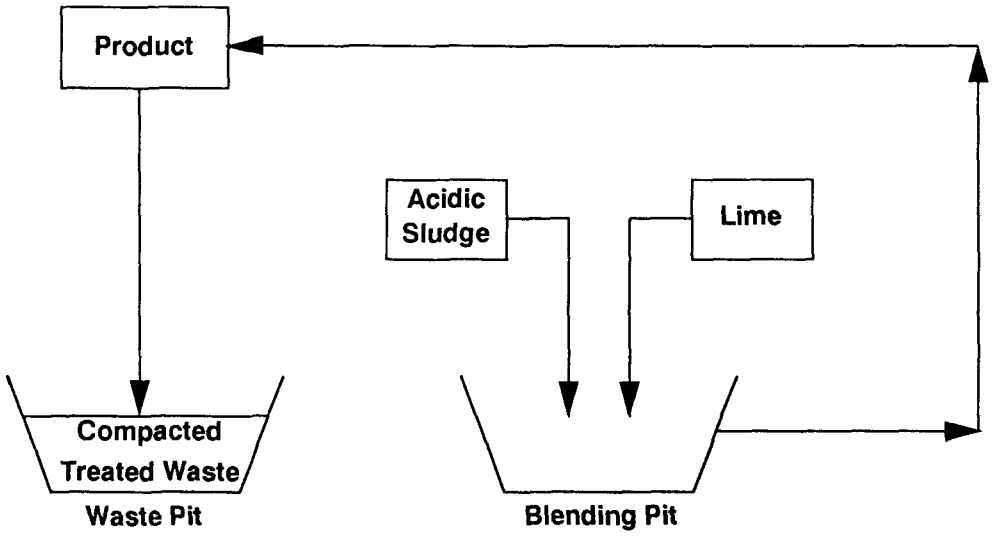

Figure 1. Process flow diagram.

STATUS:

EPA is seeking a suitable site to demonstrate this technology. A SITE demonstration is planned for spring/summer 1991.

FOR FURTHER INFORMATION:

EPA Project Manager:
Walter Grube
U.S. Environmental Protection Agency
Risk Reduction Engineering Laboratory
26 West Martin Luther King Drive
Cincinnati, Ohio 45268
513-569-7798
FTS: 684-7798

Technology Developer Contact:
Joseph DeFranco
Separation and Recovery Systems, Inc.
1762 McGaw Avenue
Irvine, California 92714
714-261-8860

SHIRCO INFRARED SYSTEMS
(Infrared Thermal Destruction)

TECHNOLOGY DESCRIPTION:

The electric infrared incineration technology (originally developed by Shirco Infrared Systems, Inc. of Dallas, Texas) is a mobile thermal processing system that uses electrically-powered silicon carbide rods to heat organic wastes to combustion temperatures. Any remaining combustibles are incinerated in an afterburner. One configuration for this mobile system (Figure 1) is comprised of four components: an electric-powered infrared primary chamber, a gas-fired secondary combustion chamber, an emissions control system, and a control center.

Waste is fed into the primary chamber on a wire-mesh conveyor belt and exposed to infrared radiant heat (up to 1850° F) provided by the horizontal rows of electrically-powered silicon carbide rods above the belt. A blower delivers air to selected locations along the belt and can be used to control the oxidation rate of the waste feed.

The ash material that drops off the belt in the primary chamber is quenched using scrubber water effluent. The ash is then conveyed to the ash hopper, where it is removed to a holding area and analyzed for PCB content.

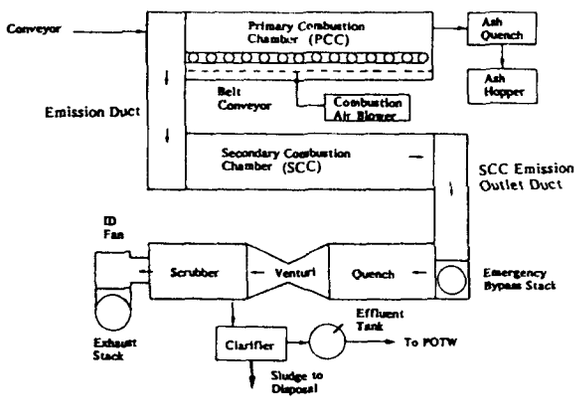

Figure 1 Peak Oil incineration unit process diagram

Volatile gases from the primary chamber flow into the secondary chamber, which uses higher temperatures, greater residence time, turbulence, and supplemental energy (if required) to destroy these gases. Gases from the secondary chamber are ducted through the emissions control system. In the emissions control system, the particulates are removed in a venturi scrubber. Acid vapor is neutralized in a packed tower scrubber. An induced draft blower draws the cleaned gases from the scrubber into the free-standing exhaust stack. An emergency stack is installed prior to the venturi scrubber system so that if the temperature control system and its interlocks fail, the emissions control system will not be melted by the hot gases.

The scrubber liquid effluent flows into a clarifier, where scrubber sludge settles out for disposal, and through an activated carbon filter for reuse or to a POTW for disposal.

WASTE APPLICABILITY:

This technology is suitable for soils or sediments with organic contaminants. Liquid organic wastes can be treated after mixing with sand or soil. Data evaluated during the Application Analysis suggest that additional preprocessing may be needed to meet suitable ranges for various waste characteristics, as follows:

--Particle size, 5 microns to 2 inches
--Moisture content, up to 50% (wt.)
--Density, 30-130 lb/cf
--Heating value, up to 10,000 Btu/lb
--Chlorine content, up to 5% (wt.)
--Sulfur content, up to 5% (wt.)
--Phosphorus, 0-300 ppm
--pH, 5-9
--Alkali metals, up to 1% (wt.)

STATUS:

EPA conducted two evaluations of the infrared system. An evaluation of a full-scale unit was conducted from August 1 to 4, 1987, during a removal action by Region IVat the Peak Oil site, an abandoned oil refinery in Tampa, Florida. During the cleanup, a nominal 100-ton per day system treated nearly 7,000 cubic yards of waste oil sludge containing PCBs and lead. A second demonstration of the system, at pilot scale, took place at the Rose Township-Demode Road site, an NPL site in Michigan, from November 2 to 11, 1987. Organics, PCBs, and metals in soil were the target waste compounds to be destroyed or immobilized. The pilot-scale operation allowed the evaluation of performance under varied operating conditions. In addition to Peak Oil, infrared incineration was used to remediate PCB-contaminated materials at the Florida Steel Corporation Superfund site, and is being used on PCB-contaminated soil at the LaSalle Electric NPL site in Illinois.

DEMONSTRATION RESULTS:

The results from the two SITE demonstrations are summarized below.

- In both tests, at standard operating conditions, PCBs were reduced to less than 1 ppm in the ash, with a DRE for air emissions greater than 99.99% (based on detection limits).
- In the pilot-scale demonstration the RCRA standard for particulate emission (180 mg/dscf) was achieved. In the full-scale demonstration, however, this standard was not met in all runs due to scrubber inefficiencies.
- Lead was not immobilized; however, it remained in the ash and significant amounts were not transferred to the scrubber water or emitted to the atmosphere.
- The pilot testing demonstrated satisfactory performance with high feed rate and reduced power consumption when fuel oil was added to the waste feed and the primary chamber temperature was reduced.

APPLICATIONS ANALYSIS SUMMARY:

Results from the two demonstrations plus eight other case studies indicate:

- The process is capable of meeting both RCRA and TSCA DRE requirements for air emissions. Operations on waste feed contaminated with PCBs have consistently met the TSCA guidance level of 2 ppm in ash.
- Improvements in the scrubber system resulted in compliance with RCRA and TSCA particulate emission standards. In some cases, restrictions in chloride levels in the waste and/or feed rate may be necessary to meet particulate emissions standards.
- Based on recent commercial operations, projected utilization factors range from 50% to 75%.
- Economic analysis and observation suggest a cost range from $180/ton to $240/ton of waste feed, excluding waste excavation, feed preparation, profit, and ash disposal costs. Overall costs may be as high as $800/ton.

FOR FURTHER INFORMATION:

EPA Project Manager:
Howard O. Wall
U.S. EPA, RREL
26 West Martin Luther King Drive
Cincinnati, Ohio 45268
513-569-7691 (FTS: 684-7691)

Technology Developer Contact:
John Cioffi
Ecova Corporation
3820 159th Avenue, NE
Redmond, WA 98052 206-883-1900

Technology Vendor Contacts:
George Hay
OH Materials Corporation 419-423-3526

Richard McAllister
Westinghouse Haztech, Inc. 404-593-3803

SILICATE TECHNOLOGY CORPORATION
(Solidification/Stabilization with Silicate Compounds)

TECHNOLOGY DESCRIPTION:

This technology uses silicate compounds for two types of solidification/stabilization applications: (1) one that fixes and solidifies organics and inorganics contained in contaminated soils and sludges; and (2) another that removes organics from contaminated water. For soils and sludges, proprietary silicate reagents selectively adsorb organic and inorganic contaminants before the waste is mixed with a cement-like material to form a high-strength, non-leaching cement block (monolith). For water, the same reagents can be used in conjunction with granular activated carbon to remove organics from the ground water. The resulting waste material is then solidified by the first technology.

In this combined technology, the type and dose of reagents depend on the waste characteristics. Treatability studies and site investigations are conducted to determine reagent formulations.

The process begins with pretreating contaminated waste material. Coarse material is separated from fine material (Figure 1) and sent through a shredder or crusher, which reduces the material to the size required for the solidification technology. The waste is then loaded into a batch plant. The waste is weighed, and the proportional amount of silicate reagent is added. This mixture is conveyed to a concrete mixing truck, pug mill or other mixing equipment where water is added and the mixture is thoroughly blended. The treated material is then placed in a confining pit on-site for curing, or cast into molds for transport and disposal off-site.

A self-contained mobile filtration pilot facility is used to treat organic-contaminated ground water. The contaminated water is passed through a column filter containing the silicate reagent. The high molecular weight organics are separated from the water in this step. The effluent from this column filter is then passed through a second column filter containing granulated activated carbon for removing low molecular weight organics.

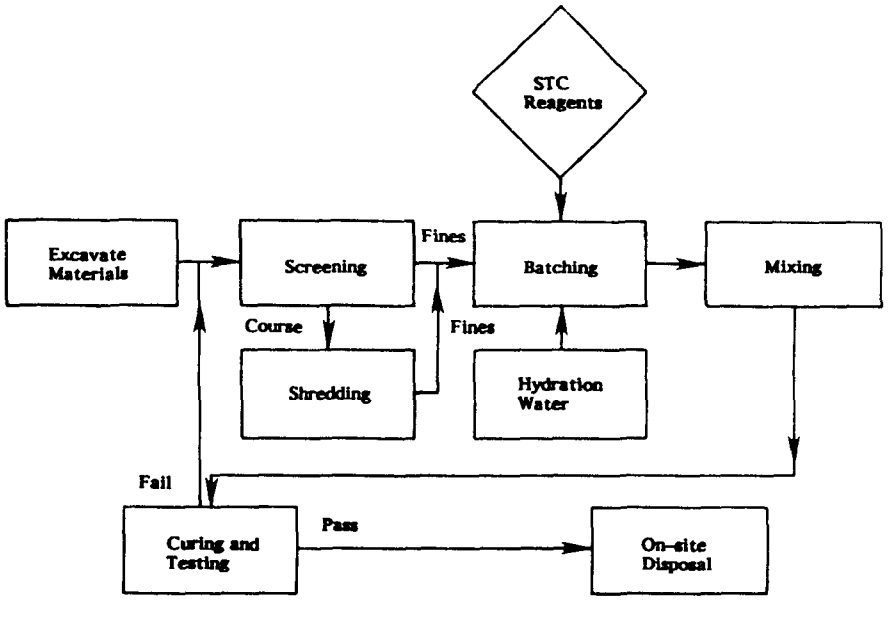

Figure 1. Contaminated soil process flow diagram.

WASTE APPLICABILITY:

This technology can be applied to soils and sludges contaminated with metals, cyanides, fluorides, arsenates, ammonia, chromates, and selenium in unlimited concentrations. Higher weight organics in ground water, soils, and sludges -- including halogenated, aromatic, and aliphatic compounds -- can also be treated by this process. However, the process is not as successful for low molecular weight organics such as alcohols, ketones and glycols and volatile organics.

STATUS:

A demonstration of this technology is scheduled to occur during October or November 1990 at a woodtreating site near Fresno, California. Contaminants at the site include pentachlorophenol, chromium, copper, and arsenic.

FOR FURTHER INFORMATION:

EPA Project Manager:
Edward R. Bates
U.S. EPA
Risk Reduction Engineering Laboratory
26 West Martin Luther King Drive
Cincinnati, Ohio 45268
513-569-7774
FTS: 684-7774

Technology Developer Contact:
Steve Pegler
Silicate Technology Corporation
Scottsdale Technology Center, Suite B2
7650 East Redfield Road
Scottsdale, Arizona 85260
602-941-1400

SOLIDITECH, INC.
(Solidification/Stabilization)

TECHNOLOGY DESCRIPTION:

This solidification/stabilization process immobilizes contaminants in soils and sludges by binding them in a concrete-like, leach-resistant matrix.

Contaminated waste materials are collected, screened to remove oversized material, and introduced to the batch mixer (Figure 1). The waste material is then mixed with: (1) water; (2) Urrichem -- a proprietary chemical reagent; (3) proprietary additives; and (4) pozzolanic material (flyash), kiln dust, or cement (cement was used for the demonstration). Once thoroughly mixed, the treated waste is discharged from the mixer. Treated waste is a solidified mass with significant unconfined compressive strength, high stability, and a rigid texture similar to that of concrete.

WASTE APPLICABILITY:

This technology is intended for treating soils and sludges contaminated with organic compounds, metals, inorganic compounds, and oil and grease. Batch mixers of various capacities are available to treat different volumes of waste.

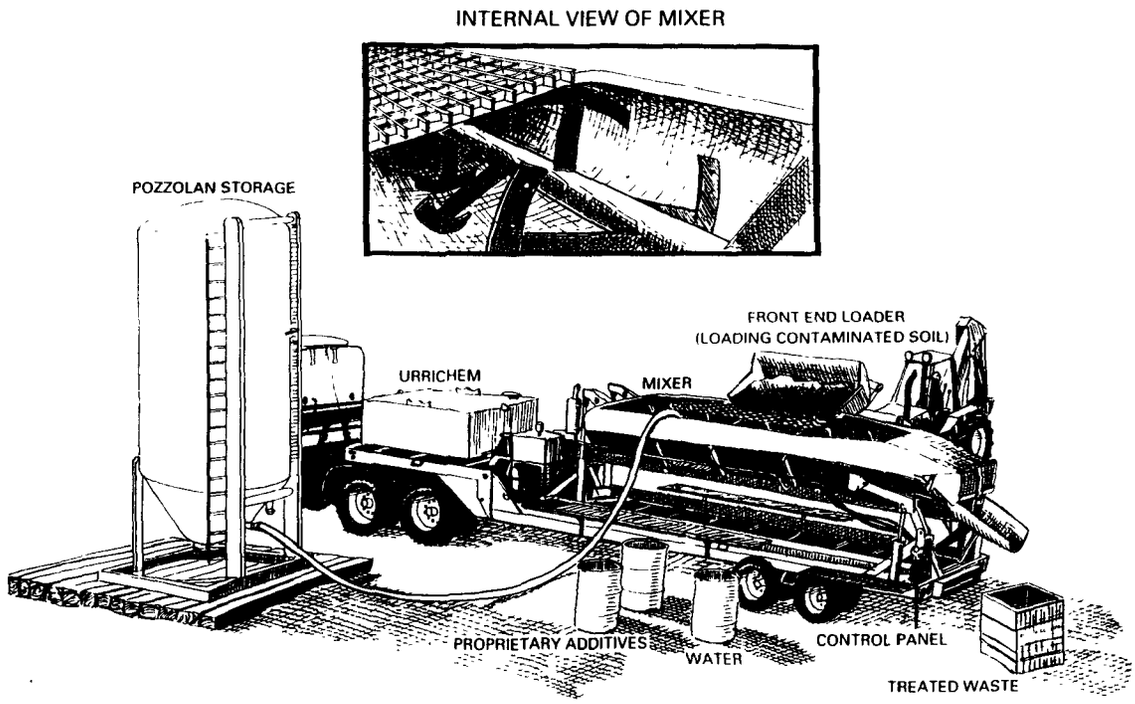

Figure 1. Soliditech processing equipment.

STATUS:

The Soliditech process was demonstrated in December 1988 at the Imperial Oil Company/Champion Chemical Company Superfund site in Morganville, New Jersey. This location formerly contained both chemical processing and oil reclamation facilities. Wastes treated during the demonstration were soils, filter cake, and oily wastes from an old storage tank. These wastes were contaminated with petroleum hydrocarbons, PCBs, other organic chemicals, and heavy metals.

DEMONSTRATION RESULTS:

Key findings from the Soliditech demonstration are summarized below:

- Chemical analyses of extracts and leachates showed that heavy metals present in the untreated waste were immobilized.
- The process solidified both solid and liquid wastes with high organic content (up to 17%) as well as oil and grease.
- Volatile organic compounds in the original waste were not detected in the treated waste.
- Physical test results of the solidified waste samples showed: (1) unconfined compressive strengths ranged from 390 to 860 psi; (2) very little weight loss after 12 cycles of wet/dry and freeze/thaw durability tests; (3) low permeability of the treated waste; and (4) increased density after treatment.
- The solidified waste increased in volume by an average of 22 percent. The bulk density of the waste material increased by approximately 35 percent due to solidification.
- Semivolatile organic compounds (phenols) were detected in the treated waste and the TCLP extracts from the treated waste but not in the untreated waste or its TCLP extracts. The presence of these compounds is believed to result from chemical reactions in the waste treatment mixture.
- Oil and grease content of the untreated waste ranged from 2.8 to 17.3 percent (28,000 to 173,000 ppm). Oil and grease content of the TCLP extracts of the solidified waste ranged from 2.4 to 12 ppm.
- The pH of the solidified waste ranged from 11.7 to 12.0. The pH of the untreated waste ranged from 3.4 to 7.9.
- PCBs were not detected in any extracts or leachates of the treated waste.
- Visual observation of solidified waste showed dark inclusions approximately 1 mm in diameter. Ongoing microstructural studies are expected to confirm that these inclusions are encapsulated wastes.

A Technology Evaluation Report was published in February 1990 in two volumes. Volume I (EPA/540/5-89/005A) is the report itself and Volume II (EPA/540/5-89/005B) contains the data to accompany the report. An Applications Analysis Report is scheduled for publication in late November 1990.

FOR FURTHER INFORMATION:

EPA Project Manager:
Walter E. Grube, Jr.
U.S. EPA
Risk Reduction Engineering Laboratory
26 West Martin Luther King Drive
Cincinnati, Ohio 45268
513-569-7798
FTS: 684-7798

Technology Developer Contact:
Bill Stallworth
Soliditech, Inc.
1325 S. Dairy Ashford, Suite 385
Houston, Texas 77077
713-497-8558

TECHTRAN, INC.
(Combined Chemical Binding/Precipitation and Physical Separation of Radionuclides)

TECHNOLOGY DESCRIPTION:

This chemical binding and physical separation method involves rapid, turbulent, in-line mixing of a proprietary fine powder (RHM 1000) containing complex oxides and other reactive binding agents. RHM 1000 absorbs, adsorbs, and chemisorbs most radionuclides and heavy metals in water, sludges, or soils (pre-processed into slurry), yielding coagulating, floculating and precipitating reactions. The pH, mixing dynamics, and processing rates are carefully chosen to optimize the binding of contaminants.

Water is separated from the solids using a reliable, economical, two-stage process based on: (1) particle size and density separation, using clarifier technology and microfiltration of all particles and aggregates; and (2) dewatering, using a filter press, to produce a 70 to 85 percent dry filter cake with the concentrated radionuclide(s), heavy metal(s), and other solids. The filter cake is collected and stabilized for disposal.

Figure 1 shows a diagram of the steps employed in this process for water. The amount of RHM 1000 required for processing ranges from 0.1% to less than 0.01%, depending on the application.

The process is designed for continuous through-put for water (50-1500 gal/min) or batch mode sludge and soil processing (300 tons per 8 hr. day). This technology can accommodate trace levels, naturally occurring radioactive materials (NORM), and low-level radioactive wastes. The equipment is trailer-mounted for use as a mobile field system. Larger capacity systems could be skid-mounted.

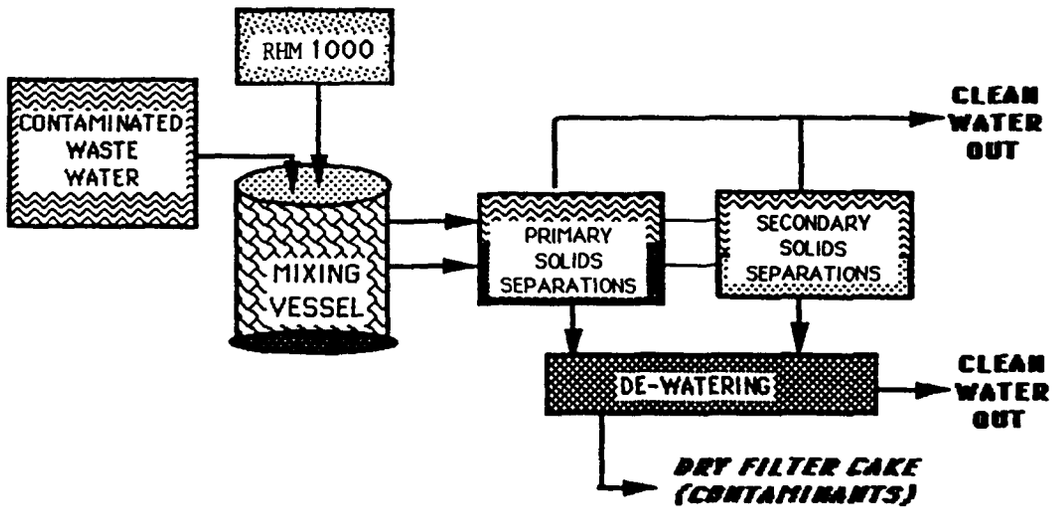

Figure 1. Schematic Diagram of Continuous Throughput for Removing Radiounuclides and Heavy Metal Contaminated Wastewater.

WASTE APPLICABILITY:

The technology can be used for: (1) cleanup and remediation of water, sludges, and soils contaminated with radium, thorium, uranium and heavy metals from uranium mining/ milling operations; (2) cleanup of water containing NORM and heavy metals from oil and gas drilling; and (3) cleanup and remediation of man-made radionuclides stored in underground tanks, pits, ponds, or barrels. This technology is not applicable to water containing tritium.

STATUS:

This technology was accepted into the EPA SITE Demonstration Program in July 1990. The Department of Energy (DOE) is working with the EPA to evaluate the TechTran's chemical binding and physical separation process.

FOR FURTHER INFORMATION:

EPA Project Manager:
Annette Gatchett
U.S. EPA
Risk Reduction Engineering Laboratory
26 West Martin Luther King Drive
Cincinnati, Ohio 45268
513-569-7697
FTS: 684-7697

Technology Developer Contact:
Tod S. Johnson
TechTran, Inc.
7705 Wright Road
Houston, Texas 77041
713-896-8205

TERRA VAC, INC.
(In-Situ Vacuum Extraction)

TECHNOLOGY DESCRIPTION:

In-situ vacuum extraction technology is the process of removing and treating volatile organic compounds (VOCs) from the vadose or unsaturated zone of soils. Often, these compounds can be removed from the vadose zone before they contaminate ground water. In this technology, a well is used to extract subsurface organic contaminants. The extracted contaminant stream passes through a vapor/liquid separator, and the resulting off-gases undergo treatment, before being released into the atmosphere. Removing VOCs from the vadose zone using a vacuum is a patented process.

The technology uses readily available equipment such as extraction and monitoring wells, manifold piping, a vapor/liquid separator, a vacuum pump, and an emission control device, such as an activated carbon canister. Once a contaminated area is completely defined, an extraction well is installed and connected by piping to a vapor/liquid separator device.

A vacuum pump draws the subsurface contaminants through the well, to the separator device, and through a treatment system consisting of activated carbon or a catalytic oxidizer before the air stream is discharged to the atmosphere. Subsurface vacuum and soil vapor concentrations are monitored using vadose zone monitoring wells.

The technology does not require soil excavation, and is not limited by depth. The technology works best at sites that are contaminated by liquids with high vapor pressures. The success of the system depends on site conditions, soil properties, and the chemical properties of the contaminants. The process works in soils of low permeability (clays) if the soil has sufficient air-filled porosity. Depending on the soil type and the depth to ground water, the radius of influence of a single extraction well can range from tens to hundreds of feet.

Typical contaminant recovery rates range between 20 and 2,500 pounds per day, and are a function of the degree of contamination at the site. Typically the more volatile the organic compound, the faster the process works. The process is cost-effective at sites where contaminated soils are predominantly above or below the water table; dual vacuum extraction systems have been designed for both vapor and ground-water recovery (Figure 1).

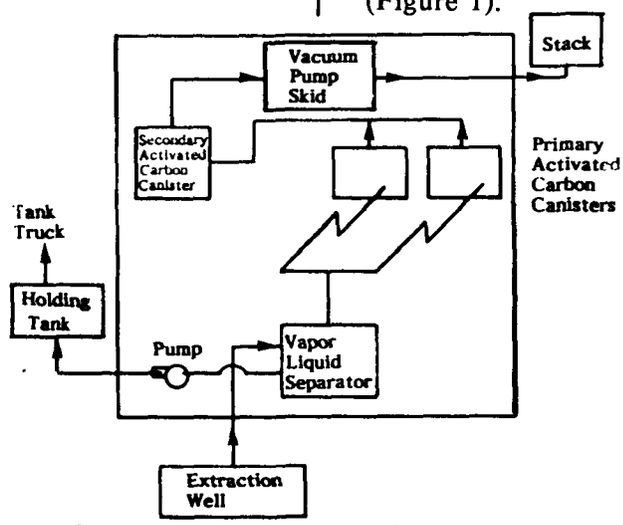

Figure 1. Process diagram for in-situ vacuum extraction.

WASTE APPLICABILITY:

This technology is applicable to organic compounds that are volatile or semivolatile at ambient temperatures in soils and ground water. Contaminants should have a Henry's constant of 0.001 or higher for effective removal.

STATUS:

The technology was first applied at a Superfund site in Puerto Rico, where carbon tetrachloride had leaked from an underground storage tank. In-situ vacuum extraction processes have been used at more than 100 waste sites across the United States, such as the Verona Wells Superfund Site in Battle Creek, Michigan, which contains trichloroethylene and contaminants from solvent storage and spills. A field demonstration of the process was performed as part of the SITE Program at the Groveland Wells Superfund site in Groveland, Massachusetts, which is contaminated by trichloroethylene (TCE).

The Technology Evaluation Report and Applications Analysis Report have been published.

DEMONSTRATION RESULTS:

The in situ vacuum extraction demonstration at Groveland Wells Superfund site used four extraction wells to pump contaminants to the process system. Four monitoring wells were used to measure the impact of treatment on site contamination. During the SITE demonstration, 1,300 pounds of volatile organics, mainly TCE, were extracted during a 56-day operational period. The volatiles were removed from both highly permeable strata and low permeability clays. The process achieved nondetectable levels of VOCs in the soil at some locations at the test area. The VOC concentration in soil gas was reduced 95 percent.

APPLICATIONS ANALYSIS SUMMARY:

The Terra Vac system was tested at several Superfund and non-Superfund sites. These field evaluations yielded the following conclusions:

- The process represents a viable technology to fully remediate a site contaminated with volatile organic compounds. Cleanup to non-detectable levels in soil can be achieved.
- The major considerations in applying this technology are: volatility of the contaminants (Henry's constant), and the site soil porosity.
- The process performed well in removing volatile organic compounds from soil with measured permeabilities of 10^{-4} to 10^{-8} cm/sec.
- Pilot demonstrations are necessary at sites with complex geology or contaminant distributions.
- Based on available data, treatment costs are typically $40 per ton, but can range between $10 and $150 per ton depending upon requirements for off-gas or wastewater treatment.

FOR FURTHER INFORMATION:

EPA Project Manager:
Mary K. Stinson
U.S. EPA
Risk Reduction Engineering Laboratory
Woodbridge Avenue
Edison, New Jersey 08837
908-321-6683
FTS: 340-6683

Technology Developer Contact:
James Malot
Terra Vac, Inc.
356 Fontaleza Street
P.O. Box 1591
San Juan, Puerto Rico 00903
809-723-9171

THERMAL WASTE MANAGEMENT
(Production of Fossil Fuel from Petroleum-Based Sludges)

TECHNOLOGY DESCRIPTION:

The process is a mobile, low-temperature, recycling process that produces solid fossil fuel from otherwise hazardous, oily petroleum sludges (Figure 1). A thick, sticky tar or waste is converted into a light, organic liquid and a solid cake, which can be more easily handled. A screw flight dryer (auger) dries the petroleum sludges, resulting in a fossil fuel product. Other by-products include a light hydrocarbon liquid and water. These condense from vapors emitted during the heating stages of the process. Hydrocarbons are recycled and the water is treated before release.

WASTE APPLICABILITY:

This process is applicable to petroleum sludges. The sludge must not have a low pH and must be dewatered to a maximum of 50% to 60% moisture. The sludge must be screened to prevent large debris from entering the dryer.

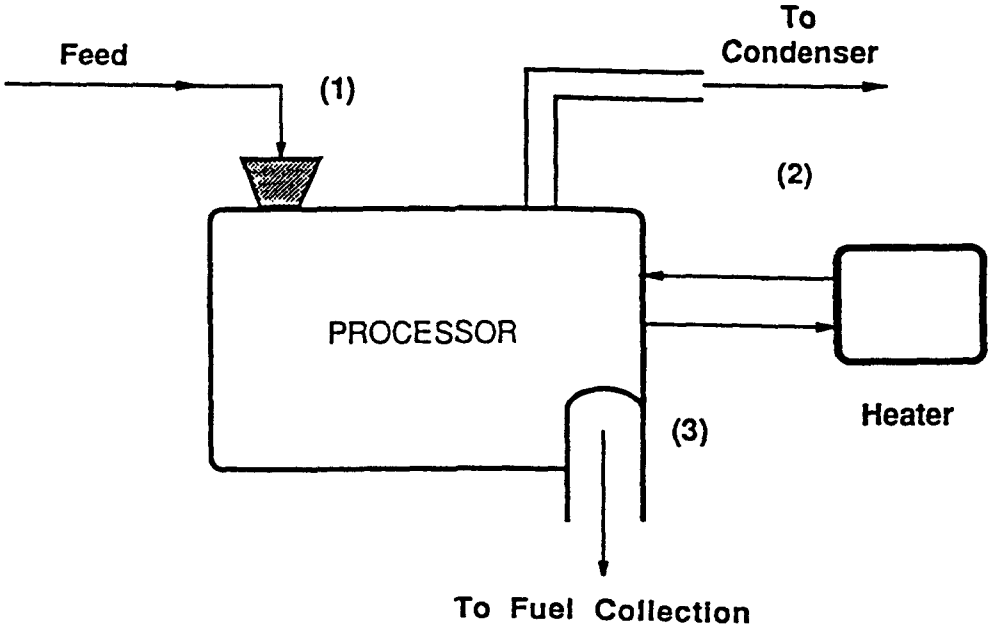

(1)	(2)	(3)
Sludge	Vapors	Fuel

Figure 1. TWM Process Flow Diagram.

STATUS:

Pilot scale tests have been conducted on hazardous petroleum refinery sludges. This technology was accepted into the SITE Demonstration Program in June 1990.

FOR FURTHER INFORMATION:

EPA Project Manager:
Paul dePercin
U.S. EPA
Risk Reduction Engineering Laboratory
26 West Martin Luther King Drive
Cincinnati, Ohio 45268
513-569-7797
FTS: 684-7797

Technology Developer Contact:
George Lane
Thermal Waste Management
237 Royal Street
New Orleans, LA 70130
504-525-9722

TOXIC TREATMENTS (USA) INC.
(In-Situ Steam/Air Stripping)

TECHNOLOGY DESCRIPTION:

In this technology, a transportable "detoxifier" treatment unit is used for in-situ steam and air stripping of volatile organics from contaminated soil.

The two main components of the on-site treatment equipment are the process tower and process train (Figure 1). The process tower contains two counter-rotating hollow-stem drills, each with a modified cutting bit 5 feet in diameter, capable of operating to a 27-foot depth. Each drill contains two concentric pipes. The inner pipe is used to convey steam to the rotating cutting blades. The steam is supplied by an oil-fired boiler at 450°F and 450 psig. The outer pipe conveys air at approximately 300°F and 250 psig to the rotating blades.

Steam is piped to the top of the drills and injected through the cutting blades. The steam heats the ground being remediated, increasing the vapor pressure of the volatile contaminants and thereby increasing the rate at which they can be stripped. Both the air and steam serve as carriers to convey these contaminants to the surface. A metal box, called a shroud, seals the process area above the rotating cutter blades from the outside environment, collects the volatile contaminants, and ducts them to the process train.

In the process train, the volatile contaminants and the water vapor are removed from the off-gas stream by condensation. The condensed water is separated from the contaminants by distillation, then filtered through activated carbon beds and subsequently used as make-up water for a wet cooling tower. Steam is also used to regenerate the activated carbon beds and as the heat source for distilling the volatile contaminants from the condensed liquid stream. The recovered concentrated organic liquid can be recycled or used as a fuel in an incinerator.

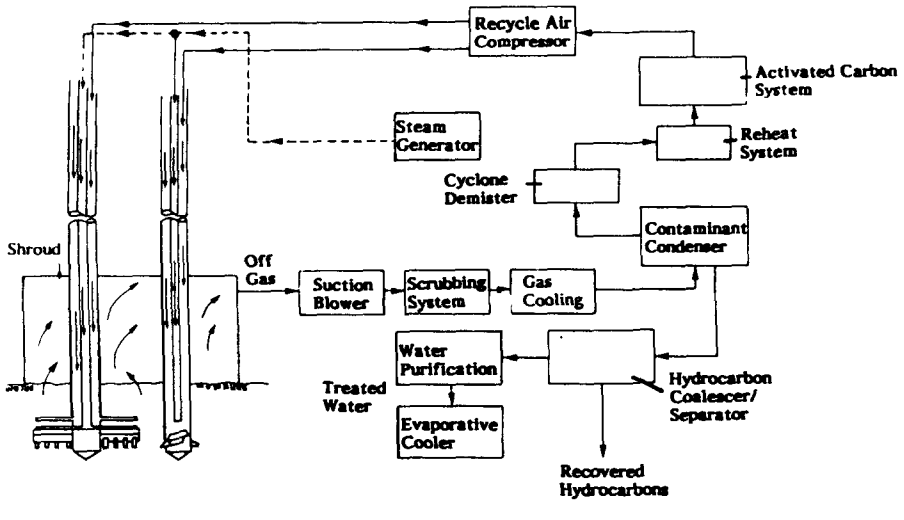

Figure 1. Typical detoxifer system process flow diagram.

WASTE APPLICABILITY:

This technology is applicable to organic contaminants such as hydrocarbons and solvents with sufficient vapor pressure in the soil. The technology is not limited by soil particle size, initial porosity, chemical concentration, or viscosity.

STATUS:

A SITE demonstration was performed the week of September 18, 1989 at the Annex Terminal, San Pedro, CA. Twelve soil blocks were treated for VOCs and SVOCs. Various liquid samples were collected from the process during operation, and the process operating procedures were closely monitored and recorded. Post-treatment soil samples were collected and analyzed by EPA 8240 and 8270. In January 1990, 6 blocks which had been previously treated in the saturated zone were analyzed for EPA 8240 and 8270 chemicals. Currently, the Technology Evaluation Report has obtained EPA clearance for publication. The Application Analysis Report is being prepared.

DEMONSTRATION RESULTS:

The following results were obtained during the SITE demonstration of the technology:

- Greater than 85 percent of the VOCs in the soil were removed.
- As much as 55 percent of SVOCs in the soil were removed.
- Fugitive air emissions from the process were very low.
- No downward migration of contaminants occurred due to the soil treatment.

FOR FURTHER INFORMATION:

EPA Project Manager:
Paul dePercin
U.S. EPA
Risk Reduction Engineering Laboratory
26 West Martin Luther King Drive
Cincinnati, Ohio 45268
513-569-7797
FTS: 684-7797

Technology Developer Contact:
Phillip N. LaMori
Toxic Treatments (USA) Inc.
151 Union Street
Suite 155
San Francisco, California 94111
415-391-2113

or

P.O. Box 789
San Pedro, CA 90733
213-514-0881

ULTROX INTERNATIONAL
(Ultraviolet Radiation/Oxidation)

TECHNOLOGY DESCRIPTION:

This ultraviolet (UV) radiation/oxidation process uses UV radiation, ozone (O_3) and hydrogen peroxide (H_2O_2) to destroy toxic organic compounds, particularly chlorinated hydrocarbons, in water. The process oxidizes compounds that are toxic or refractory (resistant to biological oxidation) in concentrations of parts per million or parts per billion.

The Ultrox system consists of a reactor module, an air compressor/ozone generator module, and a hydrogen peroxide feed system. It is skid-mounted and portable, and permits on-site treatment of a wide variety of liquid wastes, such as industrial wastewaters, ground waters, and leachate.

The reactor size is determined from the expected wastewater flow rate and the necessary hydraulic retention time to treat the contaminated water. The approximate UV intensity, and ozone and hydrogen peroxide doses are determined from pilot-scale studies.

Influent to the reactor (Figure 1) is simultaneously exposed to UV radiation, ozone, and hydrogen peroxide to oxidize the organic compounds. Off-gas from the reactor passes through an ozone destruction (Decompozon) unit, which reduces ozone levels before air venting. The Decompozon unit also destroys gaseous volatile organic compounds (VOC) stripped off in the reactor. Effluent from the reactor are tested and analyzed before disposal.

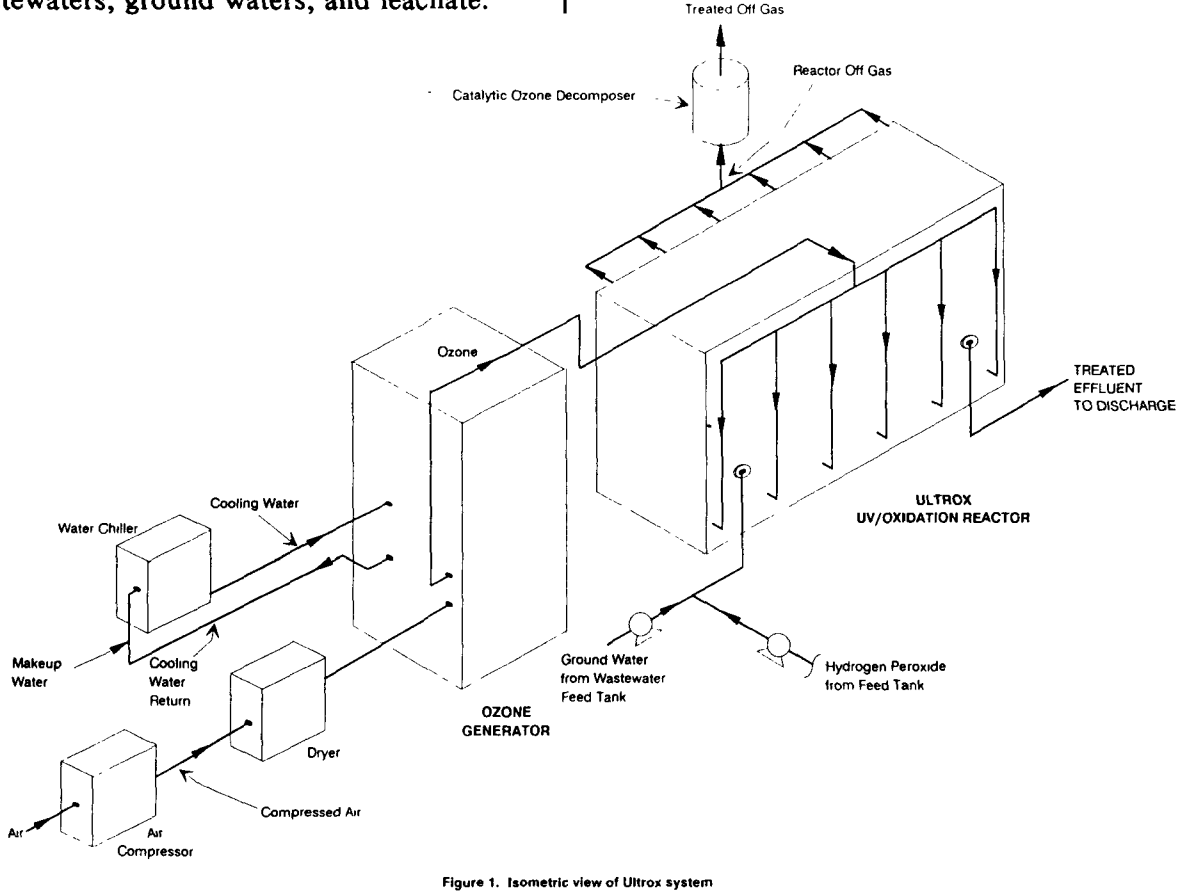

Figure 1. Isometric view of Ultrox system

WASTE APPLICABILITY:

Contaminated ground water, industrial wastewaters and leachates containing halogenated solvents, phenol, pentachlorophenol, pesticides, PCBs, and other organic compounds are suitable for this treatment process.

STATUS:

A field-scale demonstration was completed in March 1989 at a hazardous waste site in San Jose, California. The test program was designed to evaluate the performance of the Ultrox System at several combinations of five operating parameters: (1) influent pH, (2) retention time, (3) ozone dose, (4) hydrogen peroxide dose, and (5) UV radiation intensity. The Technology Evaluation Report was published in January 1990 (EPA/540/A5-89/012). The Applications Analysis Report is being published and should be available in December 1990.

DEMONSTRATION RESULTS:

Contaminated groundwater treated by the Ultrox system met regulatory standards at the following operating conditions:

Retention time	-	40 minutes
Influent pH	-	7.2 (unadjusted)
O_3 dose	-	110 mg/L
H_2O_2 dose	-	13 mg/L
UV lamps	-	all 24 operating at 64 watts each

Out of 44 VOC samples, three were chosen to be used as indicator parameters. The VOC removal efficiencies at these conditions are presented in Table 1.

TABLE 1
PERFORMANCE DATA FOR REPRODUCIBLE RUNS

	Mean Influent (µg/L)	Mean Effluent (µg/L)	Percent Removal
Run 9			
TCE	65	1.2	98
1,1-DCA	11	5.3	52
1,1,1-TCA	4.3	0.75	83
Total VOCs	170	16	91
Run 12			
TCE	52	0.55	99
1,1-DCA	11	3.8	65
1,1,1-TCA	3.3	0.43	87
Total VOCs	150	12	92
Run 13			
TCE	49	0.63	99
1,1-DCA	10	4.2	58
1,1,1-TCA	3.2	0.49	85
Total VOCs	120	20	83

Removal efficiencies for TCE were about 99 percent. Removal efficiencies for 1,1-DCA and 1,1,1-TCA were about 58 percent and 85 percent, respectively. Removal efficiencies for total VOCs were about 90 percent.

For some compounds, removal from the water phase was due to both chemical oxidation and stripping. Stripping accounted for 12 to 75 percent of the total removal for 1,1,1-TCA and 5 to 44 percent for 1,1-DCA. Stripping was less than 10 percent for TCE and vinyl chloride, and was negligible for other VOCs present.

The Decompozon unit reduced ozone to less than 0.1 ppm (OSHA standards), with efficiencies greater than 99.99 percent. VOCs present in the air within the treatment system, at approximately 0.1 to 0.5 ppm, were not detected after passing through the Decompozon unit.

Very low TOC removal was found, implying that partial oxidation of organics occurred without complete conversion to CO_2 and H_2O.

The average electrical energy consumption was about 11 kW/hour of operation.

FOR FURTHER INFORMATION:

EPA Project Manager:
Norma Lewis
U.S. EPA
Risk Reduction Engineering Laboratory
26 West Martin Luther King Drive
Cincinnati, Ohio 45268
513-569-7665
FTS: 684-7665

Technology Developer Contact:
David B. Fletcher
Ultrox International
2435 South Anne Street
Santa Ana, California 92704
714-545-5557

WASTECH, INC.
(Solidification/Stabilization)

TECHNOLOGY DESCRIPTION:

This solidification/stabilization technology applies proprietary bonding agents to soils, sludge, and liquid wastes containing volatile or semivolatile organic and inorganic contaminates to fix the pollutants within the wastes. The treated waste is then mixed with cementitious materials and placed in a stabilizing matrix. The specific reagents used are custom-selected based on the particular waste to be treated. The resultant material is a high-strength, non-leaching monolith that can be placed into the ground without double liners or covering caps.

The process uses standard engineering and construction equipment. Since the type and dose of reagents depend on the waste's characteristics, treatability studies and site investigations must be conducted to determine the proper reagent mix. The process begins with a front end loader and/or a backhoe excavating the waste material. Material containing large pieces of debris must be prescreened. The waste is then placed, in measured quantities, into a pug mill or other mixer (see Figure 1), where it is mixed with a controlled amount of water and reagent. From there, the waste-reagent mixture is transferred to the cement batcher, where it is mixed with dry blends of a pozzolanic mixture. The operation does not generate waste byproducts.

WASTE APPLICABILITY:

This technology has treated a wide variety of waste streams consisting of soils, sludges, and raw organic streams, such as lubricating oil, aromatic solvents, evaporator bottoms, chelating agents, and ion exchange resins, with contaminant concentrations ranging from ppm levels to 40% by volume. It can also be applied to mixed wastes containing radioactive materials along with organic and inorganic contaminants.

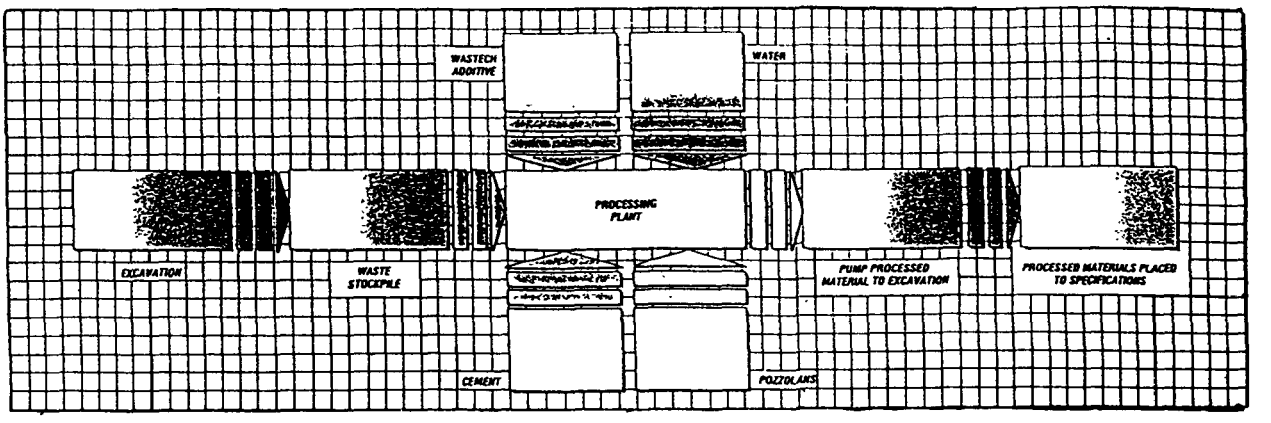

Figure 1. On-Site Remediation Project Flow Diagram.

STATUS:

EPA is in the process of selecting a site for the technology demonstration. Treatability studies are currently underway on two wastes -- an oily waste and a wood preserving waste. An additional treatability study was conducted on mixed organic and inorganic wastes from three sites. A demonstration is currently planned for late 1990 on a site in Georgia.

FOR FURTHER INFORMATION:

EPA Project Manager:
Terry Lyons
U.S. EPA
Risk Reduction Laboratory
26 West Martin Luther King Drive
Cincinnati, Ohio 45268
513-569-7589
FTS: 684-7589

Technology Developer Contact:
E. Benjamin Peacock
Wastech, Inc.
P.O. Box 1213
114 Tulsa Road
Oak Ridge, Tennessee 37830
615-483-6515

ZIMPRO/PASSAVANT INC.
(PACT®/Wet Air Oxidation)

TECHNOLOGY DESCRIPTION:

Zimpro/Passavant Inc. has developed a treatment system that combines two technologies: the PACT® treatment system and wet air oxidation (WAO). The PACT® system uses powdered activated carbon (PAC) combined with conventional biological treatment (e.g., an activated sludge system) to treat liquid waste containing toxic organic contaminants. The WAO technology can regenerate the PAC for reuse in the PACT® system. The system is mobile and can treat from 2,500 to 10,000 gallons of wastewater per day. Larger stationary systems, treating up to 53 million gallons per day, are already in operation.

In the PACT® system, organic contaminants are removed through biodegradation and adsorption. Living microorganisms (biomass) in the activated sludge system are contained in liquid suspension in an aerated basin. This biomass removes biodegradable toxic organic compounds from the liquid waste. PAC is added to enhance this biological treatment by adsorbing toxic organic compounds.

The degree of treatment achieved by the PACT® system depends on the influent waste characteristics and the system's operating parameters. Important waste characteristics include biodegradability, adsorbability, and concentrations of toxic organic compounds and inorganic compounds, such as heavy metals.

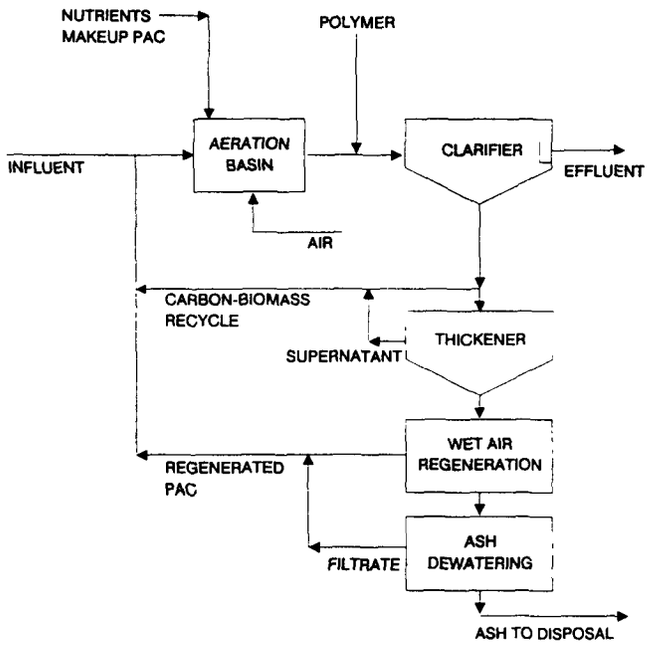

Figure 1. PACT® system with WAO.

Major operating parameters include carbon dose, hydraulic retention time of the aeration basin, solids retention time of the biomass-carbon mixture, and biomass concentration in the system. Liquid wastes fed into the PACT® system should have sufficient nutrients (nitrogen and phosphorous) and biodegradable compounds to support the growth of active biomass in the aeration basin. The temperature of the waste should be in the range of 40° F to 100° F, and the influent pH in the range of 6 to 9. Solids retention times affect both the concentration and type of biomass in the system; these vary from 2 days to 50 days. Hydraulic retention times affect the degree of biodegradation achieved and typically range from 2 hours to 24 hours for relatively dilute wastes, such as contaminated groundwater, up to several days for concentrated wastes and leachate. Carbon doses vary widely, depending on the biodegradability and adsorptive characteristics of the contaminants in the waste. Higher PAC concentrations improve the settleability of the PAC-biomass mixture and reduce air stripping of volatile organic contaminants.

Excess solids (PAC with adsorbed organics, biomass, and inert solids) are removed periodically from the system through the system's clarifier (settling tank) or thickener (see Figure 1). These excess solids are routed to the WAO system reactor to regenerate the spent PAC and destroy organics remaining in the biomass. Temperatures and pressures in the WAO system will be about 480° F and 800 to 850 pounds per square inch, respectively. After treatment in the WAO system, the regenerated PAC may be separated from the ash formed from destruction of the biomass and returned to the aeration basin for reuse.

WASTE APPLICABILITY:

This technology is applicable to municipal and industrial wastewaters, as well as ground water and leachates containing hazardous organic pollutants. According to the developer, the PACT® system has successfully treated a variety of industrial wastewaters, including chemical plant wastewaters, dye production wastewaters, pharmaceutical wastewaters, refinery wastewaters, and synthetic fuels wastewaters, in addition to contaminated groundwater and mixed industrial/municipal wastewater.

In general, PACT® system can treat liquid wastes containing wide ranges of biochemical oxygen demand (BOD) -- 10 to 30,000 parts per million (ppm) -- and chemical oxygen demand (COD) -- 20 to 60,000 ppm. Toxic volatile organic compounds can be treated up to the level where they interfere with biomass growth, about 1,000 ppm. The developer's treatability studies have shown that the PACT system can reduce the organics in contaminated groundwater from several hundred ppm to below detection limits (parts per billion range).

STATUS:

Plans are underway to secure wastewater for the system to treat. Several sites have been studied for suitability.

FOR FURTHER INFORMATION:

EPA Project Manager:
John F. Martin
U.S. EPA
Risk Reduction Engineering Laboratory
26 West Martin Luther King Drive
Cincinnati, Ohio 45268
513-569-7758
FTS: 684-7758

Technology Developer Contact:
William M. Copa
Zimpro/Passavant Inc.
301 West Military Road
Rothschild, Wisconsin 54474
715-359-7211

EMERGING PROGRAM

The Emerging Technologies Program provides a framework to encourage the bench-and pilot-scale testing and evaluation of technologies that have already been proven at the conceptual stage. The goal is to promote the development of viable alternatives available for use in Superfund site remediations.

Technologies are solicited for the Emerging Technologies Program through Requests for Pre-Proposals. Four solicitations have been issued to date -- in November 1987 (E01), July 1988 (E02), July 1989 (E03) and July 1990 (E04). Cooperative agreements between EPA and the technology developer require cost sharing. Projects are either a one or two year research effort. The selection of E04 final projects will be in early 1991.

Emerging technologies may then be considered for the SITE Demonstration Program, for field demonstration and evaluation. Currently, three technologies from the first group of proposals (E01), The Colorado School of Mines' wetlands project, Bio-Recovery System's biological sorption, and the Western Research Institute oil recovery technology have been invited to participate in the Demonstration Program. Four additional technologies are completing their research efforts this year and are potential candidates for future demonstration projects. Other emerging technologies that have promising results may also "feed" into the Demonstration Program.

The Emerging Technologies Program participants for both completed and ongoing projects (31 total) are presented in alphabetical order in Table 3 and in the technology profiles that follow.

TABLE 3

SITE Emerging Technology Program Participants

Developer	Technology	Technology Contact	EPA Project Manager	Waste Media	Applicable Waste	
					Inorganic	Organic
ABB Environmental Services, Inc. Wakefield, MA (E03)	Two-Zone Plume Interception In-Situ Treatment Strategy	Dr. Margaret Findley 617-245-6606	Ronald Lewis 513-569-7856 FTS: 684-7856	Solids, Liquids	NA	Chlorinated and Nonchlorinated Solvents
Alcoa Separations Warrendale, PA (E03)	Bioscrubber	Paul K.T. Liu 412-772-1332	Naomi P. Barkley 513-569-7854 FTS: 684-7854	Soil, Water, Air	NA	Most Organics
Atomic Energy of Canada Ltd. Chalk River, Ontario (E01) [Project Completed]	Chemical Treatment/ Ultrafiltration	Leo P. Buckley 613-584-3311	John F. Martin 513-569-7758 FTS: 684-7758	Ground Water	Heavy Metals	NA
Babcock & Wilcox Co. Alliance, OH (E02)	Cyclone Furnace	Lawrence P. King 216-821-9110	Laurel Staley 513-569-7863 FTS: 684-7863	Solids, Soil	Non-specific	Non-specific
Battelle Memorial Institute, Columbus, OH (E01) [Project Completed]	In-Situ Electroacoustic Decontamination	H.S. Muralidhara 614-424-5018	Diana Guzmán 513-569-7819 FTS: 684-7819	Soil	Heavy Metals	NA
Bio-Recovery Systems, Inc. Las Cruces, NM (E01) [Project Completed]	Biological Sorption	Dennis W. Darnall 505-646-5888	Naomi P. Barkley 513-569-7854 FTS: 684-7854	Ground Water, Leachate, Wastewater	Heavy Metals	NA
Biotrol, Inc. Chaska, MN (E03)	Methanotrophic Bioreactor System	Jeffrey Petola 612-488-2515	David L. Smith 513-569-7856 FTS: 684-7856	Water	NA	Halogenated Hydrocarbons
Boliden Allis, Inc. Milwaukee, WI (E03)	Pyrokiln Thermal Encapsulation Process	John Lees 414-475-3862	Marta K. Richards 513-569-7783 FTS: 684-7783	Soil, Sludge	Most Metallic Compounds	Most Organics

NA = Non Applicable

TABLE 3 (Continued)

SITE Emerging Technology Program Participants

Developer	Technology	Technology Contact	EPA Project Manager	Waste Media	Applicable Waste	
					Inorganic	Organic
Center for Hazardous Materials Research Pittsburgh, PA (E03)	Acid Extraction Treatment System	Stephen W. Paff 412-826-5320	Diana Guzmán 513-569-7819 FTS: 684-7819	Soil	Heavy Metals	Most Organics
Colorado School of Mines Golden, CO (E01) [Project Completed]	Wetlands-Based Treatment	Thomas Wildeman 303-273-3642	Edward Bates 513-569-7774 FTS: 684-7774	Acid Mine Drainage	Metals	NA
Electrokinetics Baton Rouge, LA (E03)	Electro-Osmosis	Yalcin B. Acar 504-388-3992	Diana Guzmán 513-569-7819 FTS: 684-7819	Soil	Heavy Metals and Other Inorganics	NA
Electron Beam Research Facility Florida International University and University of Miami Miami, FL (E03)	High Energy Electron Irradiation	William J. Cooper 305-554-3049	Frank Alvarez 513-569-7631 FTS: 684-7631	Aqueous Solutions and Sludges	NA	Most Organics
Electro-Pure Systems, Inc. Amherst, NY (E02)	Alternating Current Electrocoagulation Process	Clifton W. Farrell 716-691-2610	Naomi Barkley 513-569-7854 FTS: 684-7854	Ground Water, Wastewater, Leachate	Heavy Metals	Petroleum Byproducts, Coal-Tar Derivatives
Energy and Environmental Engineering, Inc. East Cambridge, MA (E01) [Project Completed]	Laser Induced Photochemical Oxidize Destruction	James H. Porter 617-666-5500	Ronald Lewis 513-569-7856 FTS: 684-7856	Ground Water, Wastewater	NA	Non-specific
Energy and Environmental Research Corporation Irvine, CA (E03)	Hybrid Fluid Bed System	D. Gene Taylor 714-859-8851	Teri Shearer 513-569-7949 FTS: 684-7949	Solids, Sludges	Volatile Inorganics	Most Organics

NA = Non Applicable

TABLE 3 (Continued)

SITE Emerging Technology Program Participants

Developer	Technology	Technology Contact	EPA Project Manager	Waste Media	Applicable Waste	
					Inorganic	Organic
Enviro-Sciences, Inc. Randolph, NJ (E02)	Low Energy Solvent Extraction Process	Werner Steiner 201-361-8840	S. Jackson Hubbard 513-569-7507 FTS: 684-7507	Soil, Sediments, Sludge	NA	PCBs, Other Non-specific Organic Compounds
Ferro Corporation Independence, OH (E03)	Waste Vitrification Through Electric Melting	Emilio D. Spinosa 216-641-8580	Randy Parker 513-569-7271 FTS: 684-7271	Soils, Sediments, Sludges	Most Inorganics	Non-specific
Harmon Environmental Services, Inc. (formerly Envirite Field Services, Inc.) Auburn, AL (E01) [Project Completed]	Soil Washing	William C. Webster 205-821-9253	S. Jackson Hubbard 513-569-7507 FTS: 684-7507	Soils	NA	Heavy Organic Compounds
Institute of Gas Technology Chicago, IL (E03)	Fluid Extraction-Biodegradation Process	W. Kennedy Gauger 312-567-3947	Annette Gatchett 513-569-7697 FTS: 684-7697	Soil	NA	Most Organics
Institute of Gas Technology Chicago, IL (E03)	Fluidized Bed Agglomeration/Incineration	Amir Rehmat 312-567-5899	Teri Shearer 513-569-7949 FTS: 684-7949	Solid, Liquid, Gas	Most Solid Inorganics	Most Organics
IT Corporation Knoxville, TN (E02)	Batch Steam Distillation/ Metal Extraction	Robert D. Fox 615-690-3211	Ronald Lewis 513-569-7856 FTS: 684-7856	Soil, Sludge	Heavy Metals	Non-specific
IT Corporation Knoxville, TN (E03)	Photolytic/Biological Soil Detoxification	Robert D. Fox 615-690-3211	Randy A. Parker 513-569-7271 FTS: 684-7271	Soil	NA	PCBs, Other Non-Specific Organic Compounds
Membrane Technology and Research, Inc. Menlo Park, CA (E02)	Membrane Process for Removal of Volatile Organics from Contaminated Air Streams	Dr. J.G. Wijmans 415-328-2228	Paul R. dePercin 513-569-7797 FTS: 684-7797	Gaseous Waste Streams	NA	Halogenated and Nonhalogenated Compounds

NA = Non Applicable

TABLE 3 (Continued)

SITE Emerging Technology Program Participants

Developer	Technology	Technology Contact	EPA Project Manager	Waste Media	Applicable Waste	
					Inorganic	Organic
Montana College of Mineral Science Butte, MT (E03)	Air-Sparged Hydrocyclone	Theodore Johnson 406-496-4112	Eugene F. Harris 513-569-7862 FTS: 684-7862	Aqueous Solutions	Low-concentration Metals	NA
New Jersey Institute of Technology Newark, NJ (E03)	Ghea Associates Process (Surfactant Extraction)	Joe Bozzelli 201-596-3459	Annette Gatchett 513-569-7697 FTS: 684-7697	Mixtures	Most Inorganics	Most Organics
J.R. Simplot Company Boise, ID (E03)	Anaerobic Biological Process	Douglas K. Sell 208-389-7265	Wendy Davis-Hoover 513-569-7206 FTS: 684-7206	Soil, Sludge	NA	Nitroaromatics
Trinity Environmental Technologies, Inc. Mound Valley, KS (E03)	Ultrasonic Detoxification	Duane P. Koszalka 316-328-3222	Norma Lewis and Kim Kreiton 513-569-7665 FTS: 684-7665	Solids	NA	PCBs and Other Chlorinated Compounds
University of South Carolina Columbia, SC (E03)	In-Situ Mitigation of Acid Water	Frank T. Caruccio 803-777-4512	Roger C. Wilmoth 513-569-7509 FTS: 684-7509	Acid Drainage	Most Metals	NA
University of Washington, Dept. of Civil Engineering Seattle, WA (E02)	Adsorptive Filtration	Mark Benjamin 206-543-7645	Norma Lewis 513-569-7665 FTS: 684-7665	Ground Water, Leachate, Wastewater	Metals	NA
Wastewater Tech. Centre Burlington, Ontario (E02)	Cross-Flow Pervaporation System	Abbas Zaidi 416-336-4605	John Martin 513-569-7758 FTS: 684-7758	Ground Water, Leachate, Wastewater	NA	Volatile Organic Compounds
Western Research Institute Laramie, WY (E01) [Project Completed]	Contained Recovery of Oily Wastes	James Speight 307-721-2011	Eugene F. Harris 513-569-7862 FTS: 684-7862	Soil	NA	Coal Tar Derivatives, Petroleum Byproducts

NA = Non Applicable

ABB ENVIRONMENTAL SERVICES, INC.
(Two-Zone Plume Interception In-Situ Treatment Strategy)

TECHNOLOGY DESCRIPTION:

ABB Environmental Services, Inc. treats a mixture of chlorinated and nonchlorinated organic solvents in saturated soils and ground water by applying its Two-Zone Plume Interception In-Situ Treatment Strategy. The first zone is anaerobic and promotes the reductive dechlorination of highly chlorinated solvents, such as perchloroethylene. Immediately downgradient is the second zone, where special aerobic conditions encourage the biological oxidation of the partially dechlorinated products from the first zone, as well as other compounds (Figure 1).

The first step of the treatment strategy for compounds such as perchloroethylene and trichloroethane is to encourage partial dechlorination by stimulating the growth of methanogenic bacteria in the saturated soil.

This is accomplished by providing the bacteria with a primary carbon source, such as glucose, and with mineral nutrients, such as ammonia and phosphate. Methanogenic bacteria are considered to be ubiquitously distributed in saturated soils.

At the completion of the (anaerobic) first step in the treatment process, all of the more highly chlorinated ethenes and ethanes (PCE, TCE, and TCA) in the contaminated plume are converted to less chlorinated forms (DCE, DCA) by methanogenic bacteria. At a point downgradient, oxygen is reintroduced to the ground water. Following this, methanotrophic

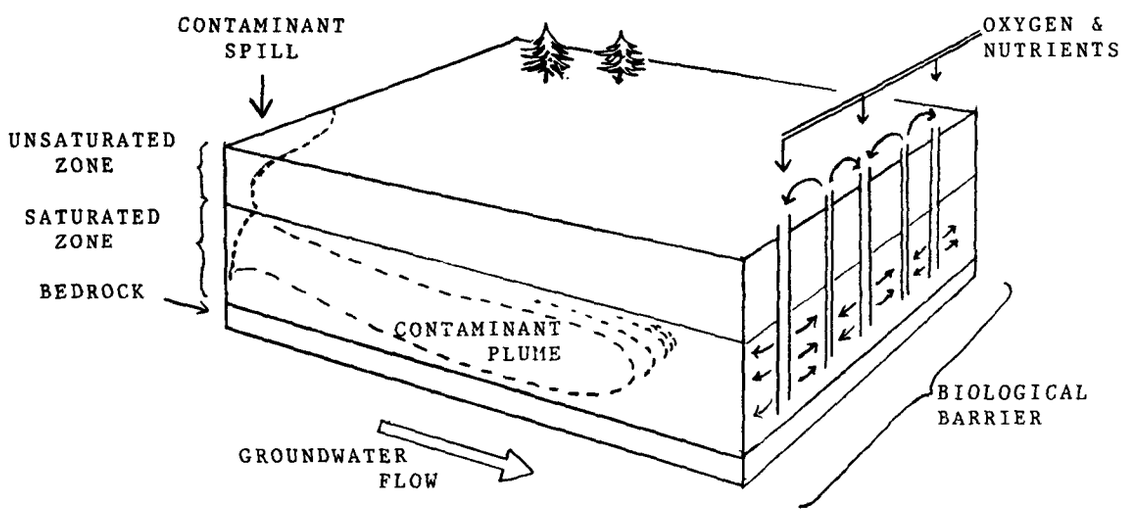

Figure 1. Two-Zone Plume Interception In-Situ Treatment Strategy.

bacteria, growing on methane and oxygen, are expected to oxidize the DCE and DCA to CO_2 and biomass.

WASTE APPLICABILITY:

This in-situ treatment technology is applicable to solids and liquids containing chlorinated and nonchlorinated solvents.

STATUS:

In preparation for eventual field testing, optimal treatment parameters will be determined by simulating the two-zone treatment in bench-scale soil aquifer simulators. Particular objectives of this testing are to: (1) understand the factors that affect the development of the bioactive zones; (2) demonstrate the treatment of chlorinated and nonchlorinated solvent mixtures using the two-zone process; and (3) develop a model for use in the design of field remediations. These investigations began in September 1990.

FOR FURTHER INFORMATION:

EPA Project Manager:
Ronald Lewis
U.S. EPA
Risk Reduction Engineering Laboratory
26 West Martin Luther King Drive
Cincinnati, Ohio 45268
513-569-7856
FTS: 684-7856

Technology Developer Contact:
Margaret Findlay
ABB Environmental Services, Inc.
Corporate Place 128
102 Anderson Road
Wakefield, MA 01880
617-245-6606

ALCOA SEPARATIONS TECHNOLOGY, INC.
(Bioscrubber)

TECHNOLOGY DESCRIPTION:

This bioscrubber technology digests hazardous organic emissions from soil, water, or air decontamination processes. The bioscrubber contains Alcoa's activated carbon medium as a support for microbial growth. This unique medium with increased microbial population and enhanced bioactivity provides effective conversion of diluted organics into carbon dioxide, water, and other non-hazardous compounds (Figure 1).

The bioscrubber can handle large volumes of air streams containing trace volatile organics that cannot be treated effectively and/or economically with existing technologies. Almost complete removal of hazardous organics has been demonstrated in a lab-scale feasibility study.

The efficiency of the bioscrubber is attributed to the fact that the carbon medium is tailored to balance macro- and micro-porosity. The macroporous volume provides sufficient internal porous surface area for microbial

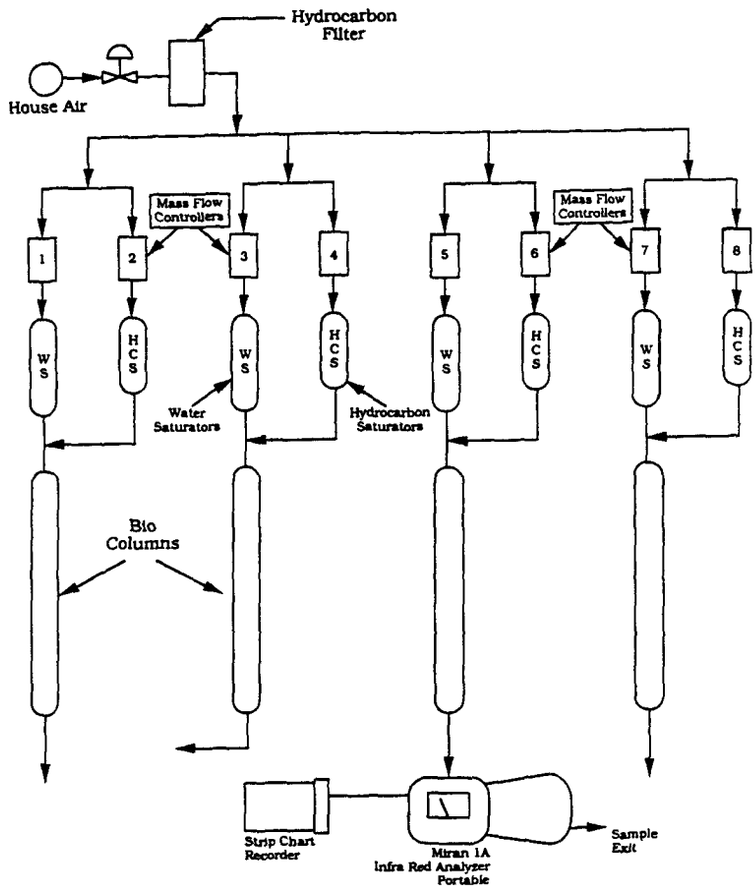

Figure 1. Schematic of Bench-Scale Unit showing Four Bio-Scrubbers in Parallel Operation.

growth. This is contrary to existing carbon media, which allow limited microbial growth on only the external surface. The microporous surface provides sufficient adsorption sites to concentrate the dilute organic vapor onto the carbon surface for effective biological digestion.

WASTE APPLICABILITY:

The bioscrubber technology can be used to remove organic emissions from soil, water, or air decontamination processes.

STATUS:

This technology was accepted into the SITE Emerging Program in July 1990. Initial project preparations, such as equipment purchase and preliminary experimental design, are underway. During 1991, bench-scale data should be available, followed by a pilot-scale installation in late 1991 or early 1992.

FOR FURTHER INFORMATION:

EPA Project Manager:
Naomi Barkley
U.S. EPA
Risk Reduction Engineering Laboratory
26 West Martin Luther King Drive
Cincinnati, Ohio 45268
513-569-7854
FTS: 684-7854

Technology Developer Contact:
Paul K. T. Liu
Alcoa Separations Technology, Inc.
181 Thorn Hill Road
Warrendale, PA 15086
412-772-1332

ATOMIC ENERGY OF CANADA LTD. (Chemical Treatment/Ultrafiltration)

TECHNOLOGY DESCRIPTION:

Ultrafiltration can be applied in combination with chemical treatment to selectively remove dissolved metal ions from dilute aqueous solutions. A high molecular weight chelating agent is added to the incoming waste solution to form macromolecular complexes. The metal ions can then be easily removed.

Usually, each chelating polymer is marked particularly for one metal cation or for a group of similar cations. Once the polymer is added, the solution is processed through an ultrafiltration membrane system that collects the macromolecular complexes (retentate) on the membrane but allows uncomplexed ions, such as sodium, potassium, calcium, chloride, sulfate, and nitrate, to pass through as filtered water (permeate). The filtered water can be recycled or discharged depending upon the metal removal requirements. A removal efficiency approaching 100 percent can be achieved for metal ions in groundwater.

The retentate, which constitutes about 5 to 20 percent of the feed volume, contains the separated heavy metal ions and must be treated further. The retentate is either solidified to prevent the release of toxic metals back to the environment; or recycled through the treatment process for further volume reduction.

Following solidification, the retentate will be more resistant to leaching due to its low salt content and the presence of chemicals that retard the migration of toxic metals.

Based on pilot-scale test results, the transportable full-scale unit was designed and constructed. It includes all necessary controls and auxiliary equipment. The installed unit has overall dimensions of 5 ft. wide x 7 ft. long x 6 ft. high.

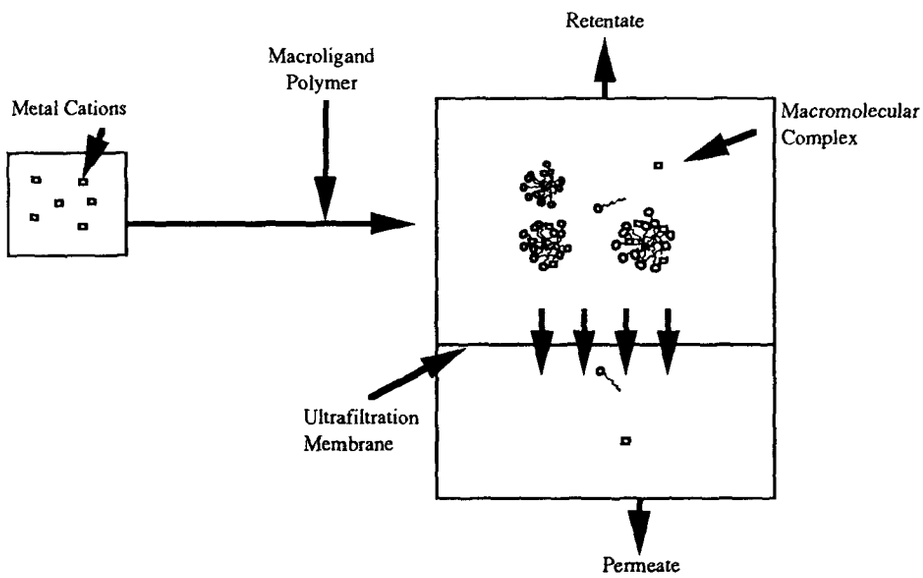

Figure 1. The concept of selective removal of heavy metals from leachate.

WASTE APPLICABILITY:

The combination chemical-ultrafiltration treatment process is intended for use on toxic metals in groundwater. Ultrafiltration has so far been applied exclusively to the removal of colloidal solids and fairly large molecules. The technology may potentially be used to separate toxic heavy metals ions, such as cadmium, chromium, lead, mercury, selenium, silver and barium (as an in-situ formed precipitate), from groundwater at Superfund sites. Other inorganic and organic materials present as suspended and colloidal solids may also be removed.

Unlike conventional precipitation technologies, process research has demonstrated that the combined metal ion complexation/ultrafiltration technique does not require precipitate handling, and thus may be more applicable to feed streams with low concentrations of metals (a few ppm), and with large variability in metals concentration and pH.

STATUS:

Bench-scale tests were conducted using cadmium, lead, and mercury at different pH levels, membrane types,polyelectrolyte types, and polyelectrolyte concentrations. The test program produced optimum conditions for the dominant variables and provided additional verification of the process to remove soluble metal cations from solution. Adding excessive amounts of polyelectrolyte did not enhance the metal separation, and at alkalinity levels the improvement in separations observed were minimal. Further evaluations of the polyelectrolyte types did not produce appreciable significant differences for the selection in pilot-scale tests.

A hollow fibre configuration for the ultrafiltration membrane was chosen for the pilot-scale unit to provide permeate rates in the range of 500 to 1000 US gal/day. The pilot-scale test program was designed to obtain engineering design data to permit the construction of a transportable field test unit capable of producing up to about 10,000 US gal/day permeate.

Pilot-scale tests were completed using the system chemistry conditions established by the bench-scale tests. A three-level factorial on key hydraulic variables was used to determine the optimum region of operation. Depending on the operating conditions, metal removal efficiencies ranged from 85 to 99%. The test program also provided information on long-term process efficiencies, effective processing rates, fouling potential of the membrane, and simple cleaning procedures to restore the membrane performance. Unlike the bench-scale test results, some metal loss occurred within the pilot-scale unit, and higher polyelectrolyte concentrations were required.

After the in-house tests are completed, a field demonstration will be conducted in September 1990 on ground water at a uranium tailings site near Elliot Lake, Ontario. The technology will be assessed for its potential to remove and reduce toxic metal ions present in the groundwater from the tailings impoundment.

FOR FURTHER INFORMATION:

EPA Project Manager:
John F. Martin
U.S. EPA
Risk Reduction Engineering Laboratory
26 West Martin Luther King Drive
Cincinnati, Ohio 45268
513-569-7758
FTS: 684-7758

Technology Developer Contact:
Leo P. Buckley
Atomic Energy of Canada, Ltd.
Waste Management Technology Division
Chalk River Nuclear Labs
Chalk River, Ontario KOJ IJO
Canada
613-584-3311

BABCOCK & WILCOX CO.
(Cyclone Furnace)

TECHNOLOGY DESCRIPTION:

This cyclone furnace technology is designed to decontaminate wastes containing both organic and metal contaminants. The cyclone furnace retains heavy metals in a non-leachable slag and vaporizes and incinerates the organic materials in the waste.

The treated soils resemble natural obsidian (volcanic glass), similar to the final product from vitrification.

The cyclone furnace (Figure 1) is designed to achieve very high heat release rates and temperatures by swirling the incoming combustion air. High swirling action efficiently mixes air and fuel and increases combustion gas residence time. The treatment unit is fired with natural gas. Fly ash and particulates from the waste are retained along the walls of the furnace by the swirling action of the combustion air, and are incorporated into slag that forms along the furnace walls.

WASTE APPLICABILITY:

This technology is applicable to solids and soil contaminated with organic compounds and metals.

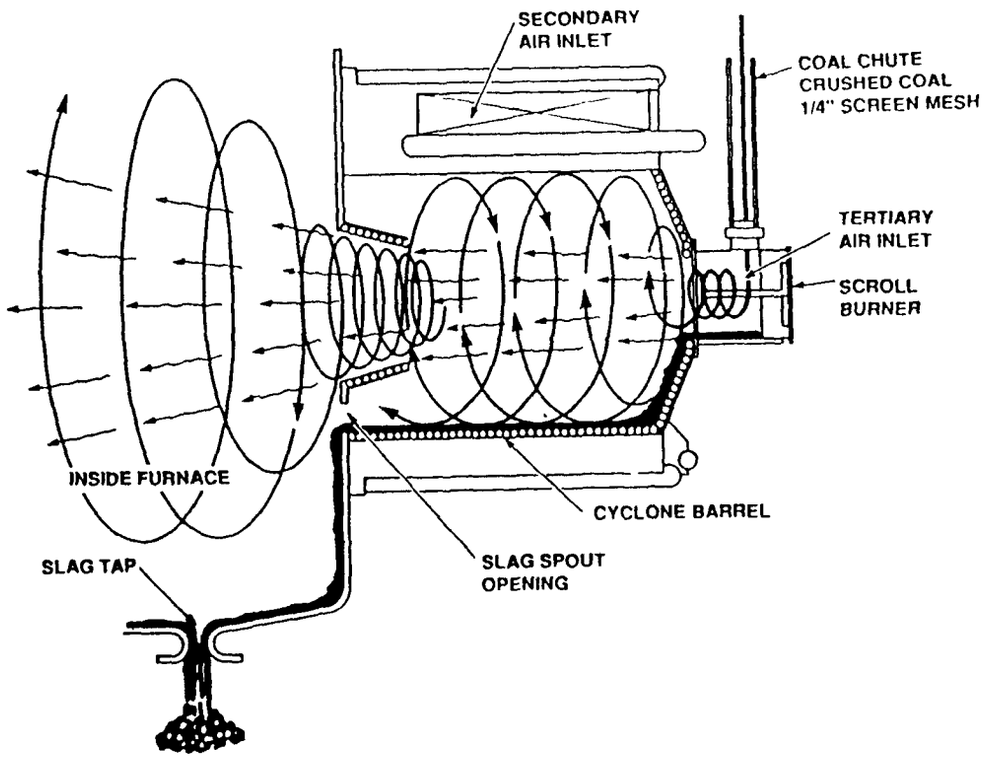

Figure 1. B&W pilot cyclone furnace.

STATUS:

This emerging technology is in the Phase I testing stage. In 1990, combustion and slagging conditions will be optimized for the U.S. EPA Synthetic Soils Matrix (SSM). The leachabilities of the metals in the resulting slag will be tested.

FOR FURTHER INFORMATION:

EPA Project Manager:
Laurel Staley
U.S. EPA
26 West Martin Luther King Drive
Cincinnati, Ohio 45268
513-569-7863
FTS: 684-7863

Technology Developer Contact:
Lawrence P. King
Babcock & Wilcox Co.
Alliance, Ohio
216-821-9110

BATTELLE MEMORIAL INSTITUTE
(In-Situ Electroacoustic Decontamination)

TECHNOLOGY DESCRIPTION:

This technology is used for in-situ decontamination of soils containing hazardous organics by applying electrical (direct current) and acoustic fields. These direct currents facilitate the transport of liquids through soils. The process consists of electrodes (an anode and a cathode) and an acoustic source (Figure 1).

The double-layer boundary theory plays an important role when an electric potential is applied to soils. For soil particles, the double layer consists of a fixed layer of negative ions that are firmly held to the solid phase and a diffuse layer of cations and anions that are more loosely held. Applying an electric potential to the double layer displaces the loosely held ions to their respective electrodes. The ions drag water along with them as they move toward the electrodes.

Besides the transport of water through wet soils, the direct current produces other effects, such as ion transfer, development of pH gradients, electrolysis, oxidation and reduction, and heat generation. The heavy metals present in contaminated soils can be leached or precipitated out of solution by electrolysis, oxidation and reduction reactions, or ionic migration. The contaminants in the soil may be cations, such as cadmium, chromium, and lead; and anions, such as cyanide, chromate, and dichromate. The existence of these ions in their respective oxidation states depends on the pH and concentration gradients in the soil. The electric field is expected to increase the leaching rate and precipitate the heavy metals out of solution by establishing appropriate pH and osmotic gradients.

When properly applied in conjunction with an electric field and water flow, an acoustic field

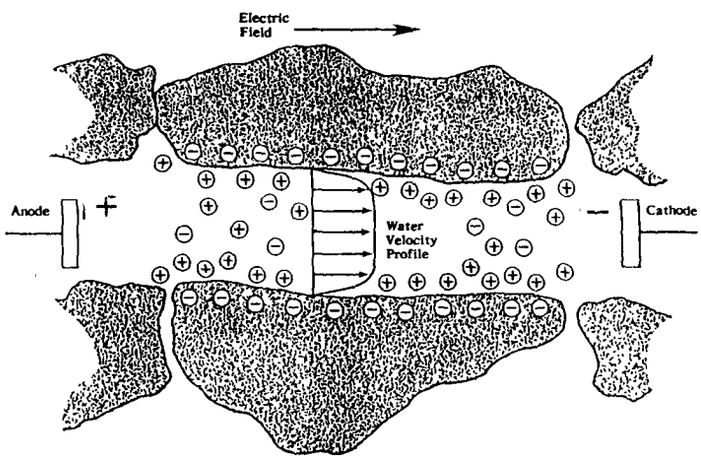

Figure 1. Electroosmosis principle.

can enhance the dewatering or leaching of wastes such as sludges. This phenomenon is not fully understood. Another potential application involves recovery well clogging. Since contaminated particles are driven to the recovery well, the pores and interstitial spaces in the soil can become plugged. This technology could be used to clear these clogged spaces.

WASTE APPLICABILITY:

Fine-grained clay soils are ideal. The technology's potential for improving non-aqueous phase liquid (NAPL) contaminant recovery and in-situ removal of heavy metals will be tested on a pilot-scale using clay soils.

STATUS:

Second-year funding for the project has not been approved. Phase I results indicate that electroacoustical decontamination is technically feasible for removal of inorganic species, such as zinc and cadmium, from clayey soils, and only marginally effective for hydrocarbon removal. An EPA report for the first year investigation is available through the National Technical Information Service. The EPA report number is EPA/540/5-90/004.

FOR FURTHER INFORMATION:

EPA Project Manager:
Diana Guzmán
U.S. EPA
Risk Reduction Engineering Laboratory
26 West Martin Luther King Drive
Cincinnati, Ohio 45268
513-569-7819
FTS: 684-7819

Technology Developer Contact:
H.S. Muralidhara
Battelle Memorial Institute
505 King Avenue
Columbus, Ohio 43201
614-424-5018

BIO-RECOVERY SYSTEMS, INC.
(Biological Sorption)

TECHNOLOGY DESCRIPTION:

The AlgaSORB™ sorption process is designed to remove heavy metal ions from aqueous solutions. The process is based upon the natural affinity of the cell walls of algae for heavy metal ions.

The sorption medium is comprised of algal cells immobilized in a silica gel polymer. This immobilization serves two purposes: (1) it protects the algal cells from decomposition by other microorganisms; and (2) it produces a hard material that can be packed into chromatographic columns which, when pressurized, still exhibit good flow characteristics.

The system functions as a biological ion-exchange resin to bind both metallic cations (positively charged ions) and metallic oxoanions (large, complex, oxygen-containing ions with a negative charge). Anions such as chlorides or sulfates are only weakly bound or not bound at all. Like ion-exchange resins, the algae-silica system can be recycled. However, in contrast to current ion-exchange technology, the components of hard water (Ca^{+2}, Mg^{+2}) or monovalent cations (Na^{+}, K^{+}) do not significantly interfere with the binding of toxic, heavy metal ions to the algae-silica matrix.

Once the media is saturated, the metals are stripped from the algae using acids, bases, or other suitable reagents. This produces a small volume of very concentrated metal-containing solutions that must be further treated to detoxify them.

Figure 1 shows a prototype portable effluent treatment equipment (PETE) unit, consisting of two columns operated in series. Each column contains 0.25 cubic feet of AlgaSORB. The unit is capable of treating flows of approximately one gallon per minute (gpm).

Larger systems have been designed and manufactured to treat flow rates greater than 100 gpm.

WASTE APPLICABILITY:

This technology is useful for removing metal ions from ground water or surface leachates that are "hard" or contain high levels of dissolved solids. Rinse waters from electroplating, metal finishing, and printed circuit board manufacturing industries can also be treated.

The system can remove heavy metals such as aluminum, cadmium, chromium, cobalt, copper, gold, iron, lead, manganese, mercury, molybdenum, nickel, platinum, silver, uranium, vanadium, and zinc.

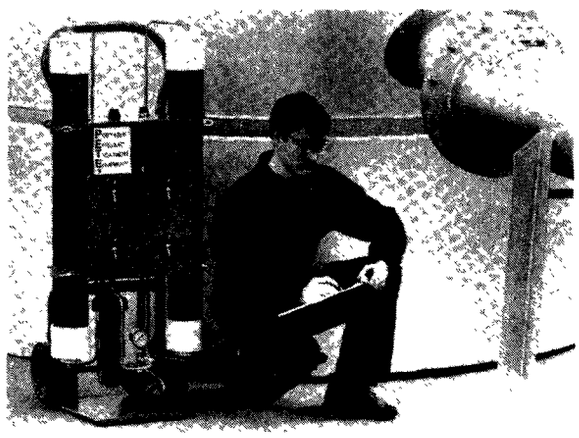

Figure 1. The PETE unit.

STATUS:

The AlgaSORB™ sorption process was tested on mercury-contaminated ground water at a hazardous waste site in Oakland, CA, in the fall of 1989.

Testing was designed to determine optimum flow rates, binding capacities, and the efficiency of stripping agents.

The final report (EPA 540/5-90/005a) is now available. Bio-Recovery Systems has been invited to participate in the SITE Demonstration Program.

The process is being commercialized for ground-water treatment and industrial point source treatment. Treatability studies are required.

FOR FURTHER INFORMATION:

EPA Project Manager:
Naomi P. Barkley
U.S. EPA
Risk Reduction Engineering Laboratory
26 West Martin Luther King Drive
Cincinnati, Ohio 45268
513-569-7854
FTS: 684-7854

Technology Developer Contact:
Dennis W. Darnall
Bio-Recovery Systems, Inc.
P.O. Box 3982, UPB
Las Cruces, New Mexico 88003
505-646-5888

BIOTROL, INC.
(Methanotrophic Bioreactor System)

TECHNOLOGY DESCRIPTION:

The Methanotrophic Bioreactor System is an above-ground remedial technology for water contaminated with halogenated hydrocarbons. Of particular interest are the chlorinated aliphatics, such as trichloroethylene (TCE), dichloroethylene (DCE) isomers, and vinyl chloride. TCE and related compounds are the most frequently occurring ground water contaminants in the country and are the primary contaminants of concern at numerous Superfund sites. Given that conventional treatment methods, such as air stripping and activated carbon filtration, are falling into increasing disfavor, it would be of tremendous significance if a cost-effective biological treatment technology were successfully commercialized.

TCE (Figure 1) and related compounds pose a difficult challenge to biological treatment. Unlike alkylated aromatic hydrocarbons (for example, BTEX), they cannot be used as primary substrates for growth by bacteria. Their degradation depends upon the process of cometabolism which is attributed to the broad substrate specificity of certain bacterial enzyme systems. Although many aerobic enzyme systems are purported to cooxidize TCE, BioTrol claims that the methane monooxygenase (MMO) of methanotrophic bacteria has the most promise.

Since 1985, BioTrol has sponsored research at the University of Minnesota under Drs. Richard Hanson and Lawrence Wackett on methanotrophic degradation of halogenated hydrocarbons. Methanotrophs are bacteria that can utilize methane as a sole source of carbon and energy.

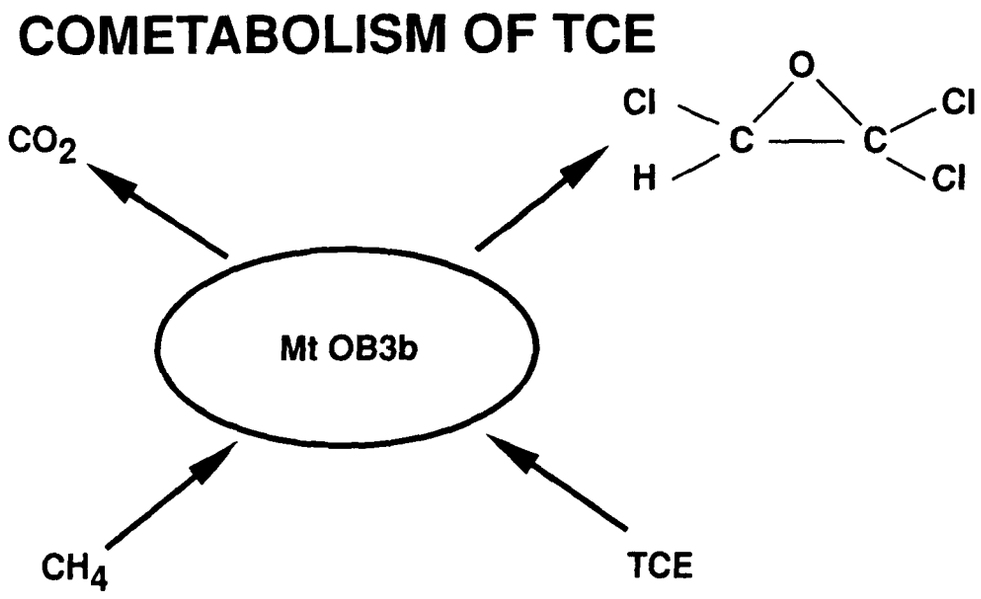

Although it is known that certain methanotrophs can express MMO in two different forms: a soluble form or a particulate (membrane bound) form. BioTrol research results have led to a patent pending on the discovery that the soluble form is responsible for extremely rapid rates of TCE degradation. Results from BioTrol experiments with *Methylosinus trichosporium* indicate that the maximum specific TCE degradation rate is 1.3g TCE/g cells (dry weight)/hr, which is 100-1000 times faster than those reported for other systems. These high rates can be maintained for extended periods by adding sodium formate as a supplemental electron donor. Figure 2 shows a typical TCE time-degradation curve.

WASTE APPLICABILITY:

The technology is applicable to water contaminated with halogenated aliphatic hydrocarbons, including TCE, DCE isomers, vinyl chloride, dichloroethane (DCA) isomers, chloroform, dichloromethane (methylene chloride), and others.

STATUS:

In July 1990, EPA awarded BioTrol a Cooperative Agreement under the SITE Emerging Program. The agreement provides for up to two years of development and testing. Of particular interest in the current program are the chlorinated aliphatics, such as trichloroethylene (TCE), dichloroethylene (DCE), and vinyl chloride.

Bench-scale experiments on two system configurations will be conducted during the first several months of the program. Later in the first year of the project, pilot-scale testing will be initiated in the field on the most promising concept. The pilot-scale test will collect data, primarily during the second year, to show the feasibility of the bioreactor technology.

FOR FURTHER INFORMATION:

EPA Project Manager:
David L. Smith
U.S. EPA
Risk Reduction Engineering Laboratory
26 West Martin Luther King Drive
Cincinnati, Ohio 45268
513-569-7856
FTS: 684-7856

Technology Developer Contact:
Jeffrey Peltola
BioTrol, Inc.
11 Peavey Road
Chaska, Minnesota 55318
612-448-2515

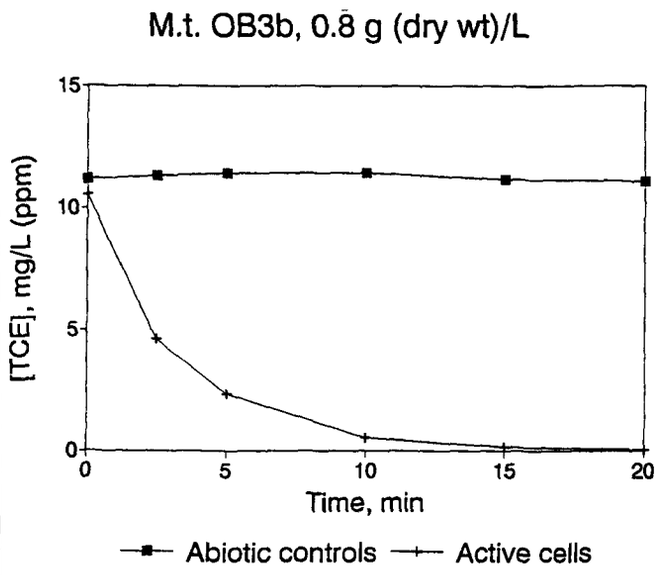

BOLIDEN ALLIS, INC.
(PYROKILN THERMAL ENCAPSULATION Process)

TECHNOLOGY DESCRIPTION:

This technology improves conventional rotary kiln hazardous waste incineration by introducing inorganic additives with the waste to promote incipient slagging or "thermal encapsulating" reactions near the kiln discharge end. The thermal encapsulation is augmented using other additives in the kiln or in the air pollution control baghouse to stabilize the metals in the flyash. The process thermally treats soils and sludges contaminated with both organics and metals. The advantages of this process include (1) immobilizing the metals remaining in the ash; (2) producing an easily handled nodular form of ash; and (3) stabilizing metals in the flyash, while avoiding the problems normally experienced with higher temperature "slagging kiln" operations (Figure 1).

The heart of this process is thermal encapsulation. It traps metals in a controlled melting process operating in the temperature range between slagging and non-slagging modes, producing nodules of ash which are 1/4 to 3/4-inch in diameter.

Organic waste is incinerated in a rotary kiln. Metallic wastes (in particular, metals with a high melting point) are trapped in the bottom ash from the kiln by adding fluxing agents that promote agglomeration via "controlled nodulizing." As proved by EP Toxicity/TCLP tests, this PYROKILN THERMAL ENCAPSULATION Process can reduce metals leaching to levels below EPA requirements. Metals with low melting and vaporization temperatures, such as lead, zinc, and arsenic, are partitioned between the bottom ash and the flyash. Those that are concentrated in the flyash are stabilized, if necessary, by adding

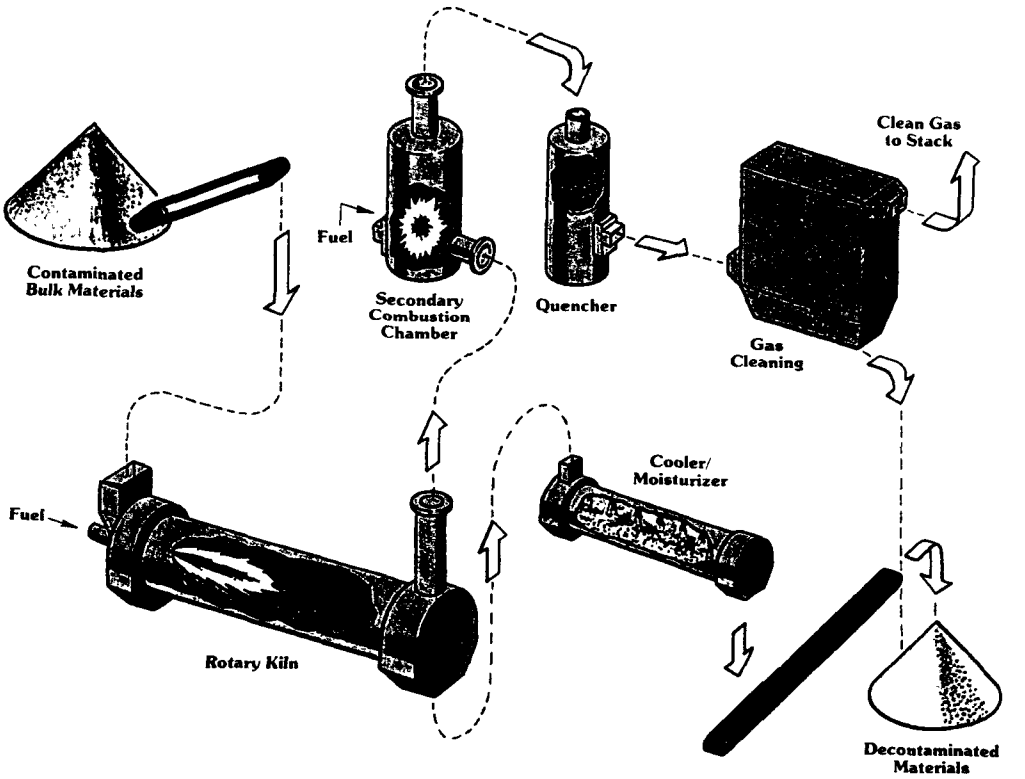

Figure 1. The Pyrokiln System.

reagents to the kiln and to the air pollution control system to reduce metals leaching to below EPA limits. Another advantage of this process is that it reduces both the total dust load to the air pollution control system as well as the amount of particulate emissions from the stack.

The use of fluxing reagents is a key element in this technology. These are introduced into the kiln in the proper amount and type to lower the softening temperature of the ash. Proper kiln design is required to allow the outlet of the kiln to function as an ash agglomerator. Good temperature control is required to keep the agglomerates at the correct particle size, yielding the desired 1/4 to 3/4-inch size nodules. The production of nodules, rather than a molten slag, avoids a multitude of operating problems, such as ash quenching, overheating, and premature failure of refractory. It also simplifies cooling, handling, and conveying of the ash.

The controlled nodulizing process immobilizes metals with high boiling points. Lead, zinc, and other metals with lower vaporization temperatures tend to leave the kiln as a fine fume and can be removed in the air pollution control system. Reagents can be injected into the kiln, the air pollution control devices, or a final solids mixer for stabilizing fines collected from the gas stream.

WASTE APPLICABILITY:

The technology is applicable to soils and sludges. The process can destroy a broad range of organic species, including halogenated and nonhalogenated organics and petroleum products. Metallic compounds which may be encapsulated or stabilized include antimony, arsenic, barium, beryllium, cadmium, chromium, copper, lead, nickel, selenium, silver, thallium, and zinc.

STATUS:

This technology was accepted into the SITE Emerging Technologies Program in March 1990. The process will be further developed in batch tests and a continuous flow pilot-scale kiln to be conducted at Boliden Allis, Inc.'s Process Research and Test Center in Oak Creek, Wisconsin.

FOR FURTHER INFORMATION:

EPA Project Manager:
Marta K. Richards
U.S. EPA
Risk Reduction Engineering Laboratory
26 West Martin Luther King Drive
Cincinnati, Ohio 45268
513-569-7783
FTS: 684-7783

Technology Developer Contact:
John N. Lees
Boliden Allis, Inc.
1126 South 70th Street
Milwaukee, WI 53214
414-475-3862

CENTER FOR HAZARDOUS MATERIALS RESEARCH
(Acid Extraction Treatment System)

TECHNOLOGY DESCRIPTION:

The Acid Extraction Treatment System (AETS) is a soil washing process that uses concentrated acid as the wasting medium. Hydrochloric acid is used to extract contaminants from soils. Following treatment, soil may be disposed or used as fill material (Figure 1).

The first step in the AETS is to separate large particles and gravel from the soil. The sand and clay/silt fractions (< 4 mm) are retained for treatment. Hydrochloric acid is slowly added to a water and soil slurry to achieve and maintain a pH of 2. Precautions are taken to avoid lowering the pH below 2 and disrupting the soil matrix.

When the extraction is complete, the soil is rinsed, neutralized, and dewatered. The extraction solution and rinse water are regenerated. The regeneration process removes entrained soil, organics, and heavy metals from the extraction fluid. Heavy metals are concentrated in a form potentially suitable for economic recovery. Recovered acid is recycled to the extraction unit.

WASTE APPLICABILITY:

Although the AETS will extract organic contaminants from soil, its principal application is to remove heavy metals.

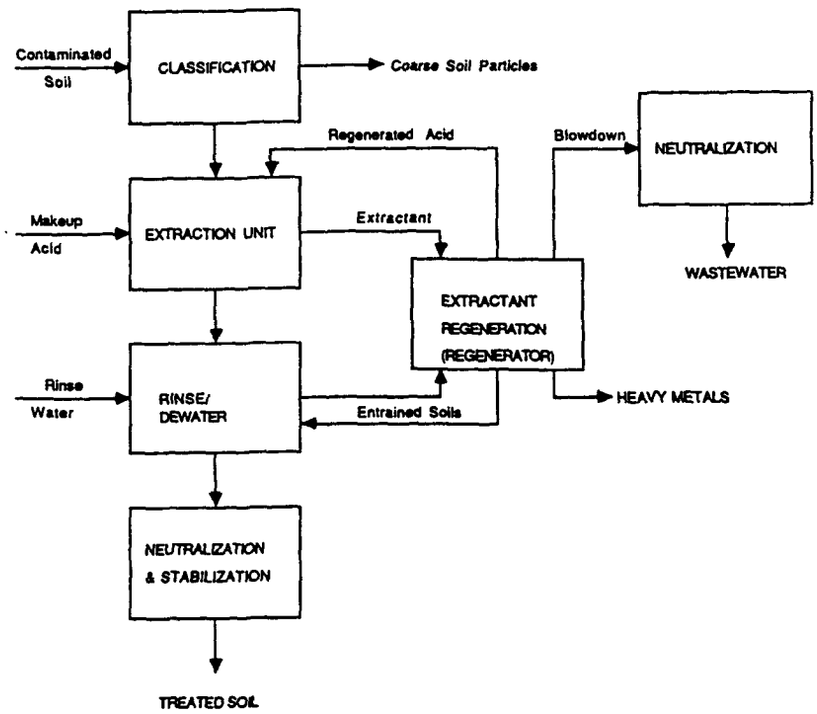

Figure 1. Flow Diagram for AETS Process.

STATUS:

This technology has been tested in the laboratory on a limited, bench-scale basis. The AETS has been successfully applied to soils contaminated with organics, but has not been fully developed for the effective removal of heavy metals. Current plans include using the AETS on samples of contaminated soil from Superfund sites. Further experiments will be performed to establish optimal operating parameters for the extraction unit and to refine the regeneration/recovery process.

FOR FURTHER INFORMATION:

EPA Project Manager:
Diana Guzmán
U.S. EPA
Risk Reduction Engineering Laboratory
26 West Martin Luther King Drive
Cincinnati, OH 45268
513-569-7819
FTS: 684-7819

Technology Developer Contact:
Stephen W. Paff
Center for Hazardous Materials Research
320 William Pitt Way
Pittsburgh, PA 15238
412-826-5320

COLORADO SCHOOL OF MINES
(Wetlands-Based Treatment)

TECHNOLOGY DESCRIPTION:

The constructed wetlands-based treatment technology uses natural geochemical and biological processes inherent in a man-made wetland ecosystem (Figure 1) to accumulate and remove metals from influent waters. The treatment system incorporates principal ecosystem components found in wetlands, including organic soils, microbial fauna, algae, and vascular plants.

Influent waters, which contain high metal concentrations and have low pH, flow through the aerobic and anaerobic zones of the wetland ecosystem. Metals are removed by filtration, ion exchange, adsorption, absorption, and precipitation through geochemical and microbial oxidation and reduction. In filtration, metal flocculates and metals that are adsorbed onto fine sediment particles settle in quiescent ponds, or are filtered out as the water percolates through the soil or the plant canopy. Ion exchange occurs as metals in the water come into contact with humic or other organic substances in the soil medium. Oxidation/reduction reactions that occur in the aerobic/anaerobic zones, respectively, play a major role in removing metals as hydroxides and sulfides.

WASTE APPLICABILITY:

The wetlands-based treatment process is suitable for acid mine drainage from metal or coal mining activities. These wastes typically contain high metals concentrations and are acidic in nature. Wetlands treatment has been applied with some success to wastewater in the

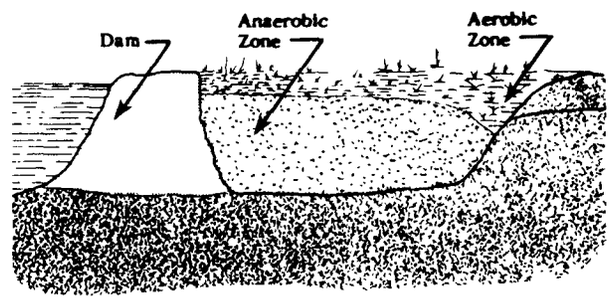

Figure 1. Typical wetland ecosystem.

eastern regions of the United States. The process may have to be adjusted to account for differences in geology, terrain, trace metal composition, and climate in the metal mining regions of the western United States.

STATUS:

Second-year funding for the project under the Emerging Technologies Program has been approved. A pilot-scale system has been built to assess the effectiveness of constructed wetlands in treating the effluent from the Big Five Tunnel near Idaho Springs, Colorado. Optimum results from two years of operation are given below.

- pH raised from 2.9 to 6.5
- Cu reduced to below detection limit
- Zn reduced by 97%
- Fe reduced by 80%
- Al, Cd, and Pb decreased 90-100%
- Co and Ni decreased 50%
- Biotoxicity to fathead minnows and Ceriodaphnia reduced by factors of 4 to 20

This technology has been invited to participate in the SITE Demonstration Program. Candidate sites include mineral mining sites.

FOR FURTHER INFORMATION:

EPA Project Manager:
Edward R. Bates
U.S. EPA
Risk Reduction Engineering Laboratory
26 West Martin Luther King Drive
Cincinnati, Ohio 45268
513-569-7774
FTS: 684-7774

Technology Developer Contact:
Thomas Wildeman
Colorado School of Mines
Golden, Colorado 80401
303-273-3642

ELECTROKINETICS, INC.
(Electro-Osmosis)

TECHNOLOGY DESCRIPTION:

Electrokinetic soil processing is an in-situ separation/removal technique for extracting heavy metals and/or organic contaminants from soils. The technology uses electricity to affect chemical concentrations and groundwater flow. In electro-osmosis (EO), the fluid between the soil particles moves because a constant, low DC current is applied through electrodes inserted into a soil mass.

Figure 1 presents a schematic diagram of the process, the electrical gradients, and the ion flow. A comparison of flow with and without EO in clays is also depicted. The efficiency of electro-osmotic water transport under EO varies with the type of soil. Figure 1 also shows that EO can be an efficient process for pumping contaminants from fine-grained, low permeability soils.

Studies of the electrochemistry associated with the process indicate that an acid front is

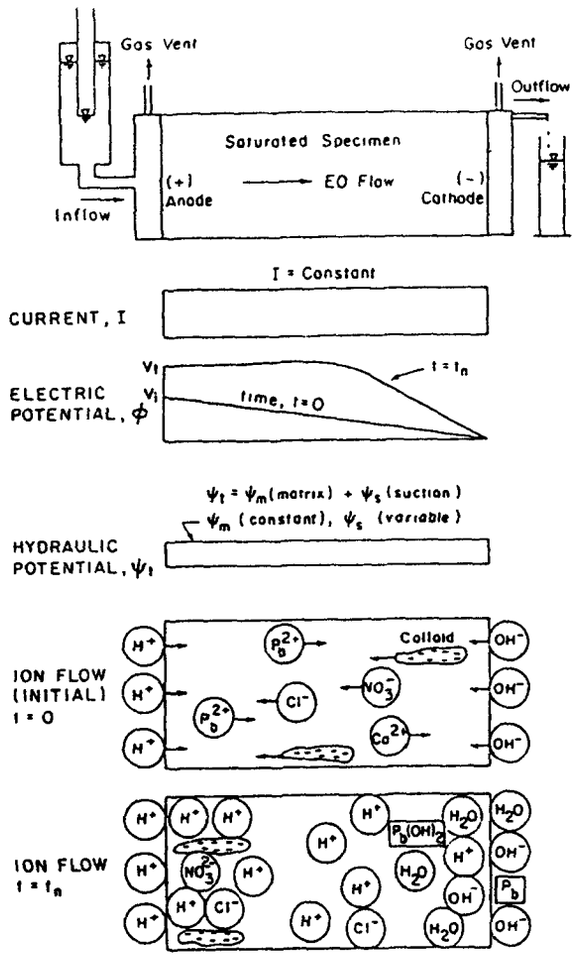

Electro-Osmotic Flow, Q_e

$Q_e = k_e \cdot i_e \cdot i_e$

k_e = electro-osmotic permeability

i_e = electrical gradient

A = area

Hydraulic Flow, Q_h

$Q_h = k_h \cdot i_h \cdot A$

k_h = hydraulic conductivity

i_h = gradient

Ratio of Two Flows

$$\frac{Q_e}{Q_h} = \frac{k_e\, i_e}{k_h\, i_h}$$

A Comparison of Two Flows in Clays

$k_e = 1 \times 10^{-5}$ (cm/sec)/(v/cm)

$k_h = 1 \times 10^{-8}$ cm/sec

i_e = 1 v/cm (typical for field application)

i_h = 1 (selected for comparison)

$$\frac{Q_e}{Q_h} = 1{,}000$$

Figure 1. Electrokenetics Process Fundamentals.

generated at the anode. In time, this acid front migrates from the anode towards the cathode. Movement of the acid front by migration and advection results in desorption of contaminants from the soil. The concurrent mobility of the ions and pore fluid under the electrical gradients decontaminates the soil mass. This phenomena provides an advantage over conventional pumping techniques for in-situ treatment of contaminated fine-grained soils.

The current state-of-the-art indicates that the process is more efficient in saturated conditions. Therefore, sites with high ground water tables are favored in the developmental phase of the technology. The process will lead to temporary acidification of the treated soil. However, equilibrium conditions will be rapidly reestablished by diffusion once the electrical potential is removed.

Studies have indicated that metallic electrodes may dissolve as a result of electrolysis and introduce corrosion products into the soil mass. However, if the electrodes are made of carbon or graphite, no residue will be introduced in the treated soil mass as a result of the process.

WASTE APPLICABILITY:

This is an in-situ separation technique for extracting heavy metals, radionuclides, and other inorganic contaminants. Bench-scale laboratory data demonstrate the feasibility of removing Pb, Cr, Cd, Ni, Cu, Zn, As, and TCE, BTEX compounds and phenol from soils. Limited bench-scale field tests demonstrated that the method removed Zn and As from clays and sandy clayey deposits. Pb and Cu were also removed from dredged sediments.

STATUS:

Bench-scale laboratory studies investigating the removal of heavy metals precipitates, radionuclides, and organic contaminants will be completed by the end of 1991. The influence of organic matter in soil on contaminant removal efficiency will also be studied. Pilot-scale field studies investigating removal of radionuclides and organics will be completed by the end of 1992. The technology will be available for full-scale implementation upon completion of the pilot-scale studies.

FOR FURTHER INFORMATION:

EPA Project Manager:
Diana Guzmán
U.S. EPA
Risk Reduction Engineering Laboratory
26 West Martin Luther King Drive
Cincinnati, Ohio 45268
513-569-7819
FTS: 684-7819

Technology Developer Contact:
Yalcin B. Acar
Electrokinetics, Inc.
Louisiana State University
South Stadium Drive
Baton Rouge, LA 70803
504-388-3992

ELECTRON BEAM RESEARCH FACILITY FLORIDA INTERNATIONAL UNIVERSITY AND UNIVERSITY OF MIAMI (High Energy Electron Irradiation)

TECHNOLOGY DESCRIPTION:

High energy electron irradiation of water solutions and sludges produces a large number of very reactive chemical species, including hydrogen peroxide. The reactive species that are formed are the aqueous electron e^-_{aq}), the hydrogen radical (H•), and the hydroxyl radical (OH•). These short-lived intermediates react with organic contaminants, transforming them to non-toxic byproducts. The principal reaction that e^-_{aq} undergoes is electron transfer to halogen-containing compounds, which breaks the halogen-carbon bond and liberates the halogen as an anion (e.g., Cl^- or Br^-). The hydroxyl radical can undergo addition or hydrogen abstraction reactions producing organic free radicals that decompose in the presence of other hydroxyl radicals and water. In most cases, the chemicals are mineralized to CO_2 and H_2O and salts. Lower molecular weight aldehydes and carboxylic acids are formed at very low concentrations in some cases. These compounds are biodegradable end products.

In the electron beam treatment process, electricity is used to generate a high voltage (1.5 MeV) and electrons. The electrons are accelerated by the voltage to approximately 95 percent of the speed of light and are then shot into a thin stream of water or sludge as it falls through the beam. All reactions are complete in less than one tenth of a second.

The electron beam and waste flow are adjusted to deliver the necessary dose of electrons. Although this is a form of ionizing radiation, there is no residual radioactivity; the system is "cold" within seconds after leaving the beam.

The full-scale facility in Miami, FL can treat more than 170,000 gallons per day. The facility is equipped to handle up to 6,000-gallon tank trucks of waste for treatability studies.

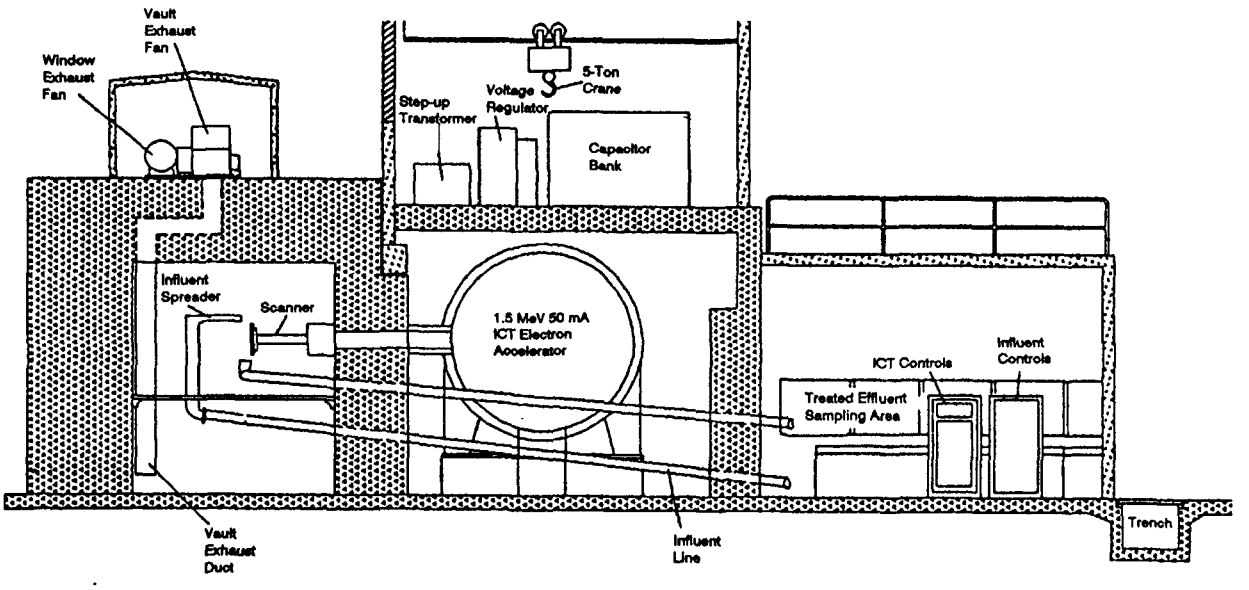

Figure 1. Electron Beam Research Facility.

WASTE APPLICABILITY:

This system has been found effective in treating a large number of common organic chemicals. These include trihalomethanes (such as chloroform), which are found in chlorinated drinking water; chlorinated solvents, including carbon tetrachloride, trichloroethane, tetrachloroethene, trichloroethylene, tetrachloroethylene, ethylene dibromide, dibromochloropropane, hexachlorobutadiene, and hexachloroethane; aromatics found in gasoline, including benzene, toluene, ethylbenzene, and xylene; chlorobenzene and dichlorobenzenes; phenol; and the persistent pesticide dieldrin.

The technology is considered applicable for removing a variety of hazardous organic compounds from aqueous waste streams and sludges with up to 8% solids.

STATUS:

This technology was accepted into the SITE Emerging Technologies Program in June 1990.

The reactive species formed in the electron beam process are known to react with many organic compounds. The major questions to be answered are: (1) what is the effectiveness of the electron beam in removing complex mixtures of hazardous organic chemicals from aqueous solutions and sludges prior to discharge? and (2) what organic reaction byproducts are formed?

FOR FURTHER INFORMATION:

EPA Project Manager:
Franklin R. Alvarez
U.S. EPA
Risk Reduction Engineering Laboratory
26 West Martin Luther King Drive
Cincinnati, Ohio 45268
513-569-7631
FTS: 684-7631

Technology Developer Contact:
William J. Cooper
Drinking Water Research Center
Florida International University
Miami, Florida 33199
305-348-3049

or

Thomas D. Waite
University of Miami
Coral Gables, Florida 33124
305-284-3467

or

Charles N. Kurucz
University of Miami
Coral Gables, Florida 33124
305-284-6595

ELECTRO-PURE SYSTEMS, INC.
(Alternating Current Electrocoagulation Process)

TECHNOLOGY DESCRIPTION:

In this technology, an alternating current electrocoagulator imposes an electric field on stable suspensions and emulsions and rearranges surface charges, which in turn facilitates particle flocculation and separation. Liquid/liquid and solid/liquid phase separations are achieved without the use of expensive polyelectrolytes. The process is also free of the excess waste solids attributed to chemical aids.

This technology is used to break stable aqueous suspensions containing submicron-sized particles up to 5 percent total solids. It also breaks stable aqueous emulsions containing up to 5 percent oil.

Figure 1 depicts the basic alternating current electrocoagulation (AC/EC) process. An electrocoagulator provides alternating current through aluminum electrodes spaced at nominal distances of 1/2 to 2 inches. The electrocoagulator is small, has no moving parts and can usually be integrated with existing processes as a pre-treatment or polishing step.

Coagulation and flocculation occur simultaneously within the electrocoagulator and continue in the product separation step. The redistribution of charges and onset of coagulation occur within the coagulator as a result of exposure to the electric field and dissociated catalytic precipitation of aluminum from the electrodes. This activity occurs rapidly (often within 30 seconds) for most aqueous suspensions. Aqueous emulsions take a little longer, approximately 2 minutes. Once the redistribution of charges and the onset of coagulation occur, treatment is complete and the suspension/emulsion may be transferred by gravity flow to the product separation step.

Product separation is accomplished in conventional gravity separation and/or decant vessels. Coagulation and flocculation continue until complete phase separation is achieved. Generally, the rate of separation is faster than with methods that employ chemical flocculants, and the solids are often more dense than those resulting from chemical treatment. Waste is removed using surface skimming, bottom scraping, and decanting.

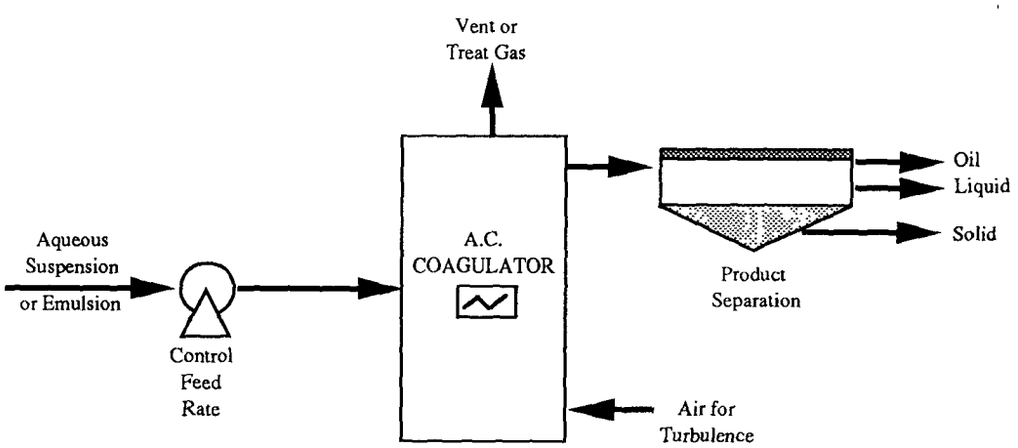

Figure 1. Alternating current electrocoagulation basic process flow.

In many applications, electrocoagulator performance may be improved by mixing the suspension/emulsion as it passes through the electric field. Turbulence can be induced by diffusing small air bubbles through the suspension in the space between the electrodes. System designs can include air emission controls, using available conventional technologies as necessary.

After the product separation step, each phase (oil, water, solid) is removed for reuse, recycling, further treatment or disposal. The technology can be employed in conjunction with conventional water treatment systems, including those relying on metal precipitation, membrane separation technologies, mobile dewatering and incineration units, and soil extraction systems. A typical decontamination application, for example, would result in a water phase that could be discharged directly to a stream or to a local wastewater treatment plant for further treatment. The solid phase, after dewatering, would be shipped off-site for disposal, and the dewatering filtrate recycled. Any floatable material would be reclaimed, refined, or otherwise recycled or disposed of.

WASTE APPLICABILITY:

The AC/EC technology can be applied to a variety of aqueous-based suspensions and emulsions typically generated from contaminated ground water, surface run-off, landfill leachate, truck wash, scrubber solutions, treated effluents, and extract solutions. The suspensions include solids such as: inorganic and organic pigments, clays, metallic powders, metal ores, and natural colloidal matter. The emulsions include an array of organic solid and liquid contaminants, including petroleum-based byproducts.

AC/EC has been used to remove fines from coal washwaters and colloidal clays from mine ponds in capacities up to 750 gpm. It has also been used to remove suspended solids and heavy metals from pond water and creosote-based contaminants from ground water.

STATUS:

Two surrogate wastes were developed and characterized using standardized test material provided by RREL, Edison.

Pilot-scale equipment has been designed and constructed. Major operating parameters have been defined. Additional parameters that influence treatment performance have been noted and are being tested. Experiment results indicate that AC/EC can effect aqueous/solid phase separations comparable to chemical flocculent addition. With AC/EC, filtration times and sludge volumes were reduced.

Efforts during the second year will concentrate on pilot-scale performance trials, mass balance constituent loading, and experiments using Superfund-type wastes to provide an enhanced understanding of the AC/EC technology for use at Superfund sites.

FOR FURTHER INFORMATION:

EPA Project Manager:
Naomi Barkley
U.S. EPA
Risk Reduction Engineering Laboratory
26 West Martin Luther King Drive
Cincinnati, Ohio 45268
513-569-7854
FTS: 684-7854

Technology Developer Contact:
Clifton W. Farrell
Electro-Pure Systems, Inc.
10 Hazelwood Drive, Suite 106
Amherst, New York 14228-2298
716-691-2610 (office)
716-691-2613 (lab)

ENERGY AND ENVIRONMENTAL ENGINEERING, INC.
(Laser Induced Photochemical Oxidative Destruction)

TECHNOLOGY DESCRIPTION:

This technology is designed to photochemically oxidize organic compounds in wastewater by applying ultraviolet radiation, using an Excimer laser. The photochemical reactor can destroy low concentrations of organics in water. The energy is sufficient to fragment the bonds of organic compounds, and the radiation is not absorbed to any significant extent by the water molecules in the solution. The process is envisioned as a final treatment step to reduce organic contamination in ground water and industrial wastewaters to acceptable discharge limits.

The overall reaction chemistry uses hydrogen peroxide as the oxidant in the reaction:

$$C_aH_bX + (2a + 0.5(b - 1))H_2O_2 \xrightarrow{hv} aCO_2 + (2a+(b-1))\ H_2O + HX$$

where C_aH_bX is a halogenated toxic component in the aqueous phase. The reaction products are carbon dioxide, water, and the corresponding halogen acid HX.

The existing process equipment has a capacity of 1 GPM when treating a solution containing 32 ppm of total organic carbon. It consists of a photochemical reactor, where oxidation is initiated; and an effluent storage tank to contain reaction products (Figure 1).

The skid-mounted system can be used in the field and stationed at a site. The exact makeup of the process will depend on the chemical composition of the ground water or wastewater being treated.

Typically, contaminated ground water is pumped from a feed well through a filter unit to remove suspended particles. The filtrate is then fed to the photochemical reactor and irradiated. The chemical oxidant (H_2O_2) is introduced to the solution to provide hydroxyl radicals required for oxidation.

The reactor effluent is directed to a vented storage tank, where the CO_2 oxidation product is vented. An appropriate base (such as $CaCO_3$) may be added to the storage tank to neutralize any halogenated acids formed when treating fluids contaminated with halogenated hydrocarbons.

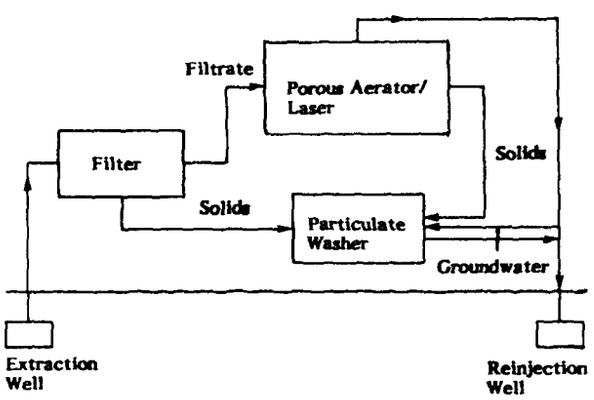

Figure 1. Diagram of the pilot scale laser-stimulated photolysis process.

The reaction kinetics depend on:

a) toxicant concentration;
b) peroxide concentration;
c) irradiation dose; and
d) irradiation frequency.

Table 1 presents typical reaction times for given levels of destruction for several toxicants of concern.

TABLE 1
DESTRUCTION OF TOXIC ORGANICS BY LASER-INDUCED PHOTOCHEMICAL OXIDATION

Compound	Reaction Time (hrs)	DRE Achieved
Benzene	96	0.91
Benzidine	288	0.88
Chlorobenzene	114	0.98
Chlorophenol	72	1.00
Dichloroethene	624	0.88
Phenol	72	1.00

$$DRE_{net} = \frac{C_{in}^* - C_{out}^*}{C_{in}} - \frac{C_{in} - C_{out}}{C_{in}}$$

Where

C_{in}^* = Contaminant Concentration in to reactor, with irradiation
C_{out}^* = Contaminant Concentration out of reactor, with irradiation
C_{in} = Contaminant Concentration in to reactor, no irradiation
C_{out} = Contaminant Concentration out of reactor, no irradiation

WASTE APPLICABILITY:

This technology can be applied to ground water and industrial wastewater containing organics.

Typical target compounds tested, in which positive results (>95% destruction removal efficiency (DRE)) were obtained, include chlorobenzene, chlorophenol, phenol, benzene, and dichloroethene.

Table 2 lists the compounds destroyed by UV/Ozonation processes which can be treated successfully by Laser-Induced Photochemical Oxidative Destruction.

TABLE 2: COMPOUNDS TREATED WITH UV/OXIDATION

Ethers	Pesticides	Aromatic Amines
BTEX	Citric Acid	Complexed Cyanides
Phenol	TCA	Polynuclear Aromatics
TCE	DCA	Dioxins
PCE	$MeCl_2$	Hydrazine
DCE	Cresols	RDX
Polynitrophenols	PCBs	1,4 Dioxane
Ketones	PCP	EDTA
Vinyl Chloride	TNT	Hydrazine

STATUS:

The process is now entering the initial phases of commercialization, with the company offering to conduct treatability studies for prospective clients. Funding is also being sought to construct a full-scale pilot facility for a SITE program demonstration. Preliminary cost evaluation shows the process to be very competitive compared to other UV oxidation processes and carbon adsorption.

FOR FURTHER INFORMATION:

EPA Project Manager:
Ronald Lewis
U.S. EPA
26 West Martin Luther King Drive
Risk Reduction Engineering Laboratory
Cincinnati, Ohio 45268
513-569-7856
FTS: 684-7856

Technology Developer Contact:
James H. Porter, L. Don D. Streete
Energy and Environmental Engineering, Inc.
P.O. Box 215
East Cambridge, Massachusetts 02141
617-666-5500

ENERGY & ENVIRONMENTAL RESEARCH CORPORATION
(Hybrid Fluidized Bed System)

TECHNOLOGY DESCRIPTION:

The Hybrid Fluidized Bed (HFB) system treats contaminated solids and sludges by (1) incinerating all organic compounds, and (2) extracting and detoxifying volatile metals. The system consists of three stages:

1. Spouted Bed -- A spouted bed rapidly heats solids and sludges to extract volatile organic and inorganic compounds. The bed's design retains larger soil clumps until they are reduced in size, but allows fine material to quickly pass through the primary stage. This segregation process is beneficial because organic contaminants in fine particles vaporize very rapidly. The decontamination time for large particles is longer due to heat and mass transfer limitations.

The central spouting region is operated with an inlet gas velocity of greater than 150 ft/sec. This creates tremendous abrasion and grinding action, resulting in the rapid size reduction of the feed materials through attrition. The spouted bed operates between 1500° F and 1700° F, under oxidizing conditions.

2. Fluidized Bed Afterburner -- Organic vapors, volatile metals, carbon, and fine soil particles are carried from the spouted bed through an open-hole type distributor, which forms the bottom of the second stage Fluidized Bed Afterburner (FBA). The fluidized bed afterburner provides sufficient retention time and mixing to incinerate the organic compounds that escape the spouted bed, resulting in a destruction and removal efficiency >99.999%. In addition, this stage contains bed materials that absorb metal vapors, capture fine particles, and promote the formation of insoluble metal silicates. A slightly sticky bed is advantageous because of its particle retention properties.

3. High Temperature Particulate Soil Extraction System -- Clean processed soil is removed from the effluent gas stream with one or two hot cyclones. The clean soil is extracted hot to preclude the condensation of any unreacted volatile metal species. Off-gases are then quenched and passed through a conventional baghouse to capture the condensed metal vapors.

Generally, material handling problems create major operational difficulties for soils cleanup devices. The HFB uses a specially designed auger feed system. Solids and sludges are dropped through a lock hopper system into an auger shredder, which is a rugged, low rpm feeding/grinding device. Standard augers are simple and reliable, but they are susceptible to clogging due to compression of the feed in the auger. In this design, the auger shredder is close-coupled to the spouted bed to reduce compression and clump formation during feeding. The close couple arrangement locates the tip of the auger screw several inches from the internal surface of the spouted bed, preventing the formation of soils plugs.

WASTE APPLICABILITY:

This technology is applicable to soils and sludges contaminated with organic and volatile inorganic contaminants. Non-volatile inorganics are not affected.

STATUS:

This technology was accepted into the SITE Emerging Technologies Program in July 1990.

FOR FURTHER INFORMATION:

EPA Project Manager:
Teri Shearer
U.S. EPA
Risk Reduction Engineering Laboratory
26 West Martin Luther King Drive
Cincinnati, Ohio 45268
513-569-7949
FTS: 684-7949

Technology Developer Contact:
D. Gene Taylor
Energy & Environmental Research Corp.
18 Mason Street
Irvine, California 92718
714-859-8851

ENVIRO-SCIENCES, INC.
(Low Energy Solvent Extraction Process)

TECHNOLOGY DESCRIPTION:

The Low Energy Solvent Extraction Process (LEEP) uses common organic solvents to extract and concentrate organic pollutants from soils, sediments and sludges. The contaminants are leached from the solids with a hydrophilic (water miscible) leaching solvent and are then concentrated in a hydrophobic (water immiscible) stripping solvent. While the leaching solvent is recycled internally, the hyrdrophobic stripping solvent containing all the contaminants is removed from the process for destruction. Decontaminated solids and water are then returned to the environment.

A solvent pair applicable to almost every type of organic contaminant has been identified. These solvents are readily available and inexpensive. Most organic contaminants of interest have a very high solubility, and particles of earth materials such as soils and sediments have fast settling rates in the selected solvents. The hydrophilic solvent is able to remove the otherwise impermeable water film surrounding the solid particles. These characteristics allow for high leaching efficiencies at high leaching rates. Due to the low latent heat value and the low boiling point of the leaching solvent, it can be recycled at a low energy cost.

The LEEP technology is capable of operating at ambient conditions and involves simple to use, heavy-duty equipment. In general, the design of LEEP allows for a wide range of processing conditions, which enables the process to achieve required cleanup levels for virtually every organic contaminant.

The leaching of the contaminated materials takes place in a heavy duty, multistage, counter-current paddle washer. The number of stages is a function of operating conditions, which can be adjusted to match site-specific parameters. The required cleanup levels can thus be achieved without multiple passes of

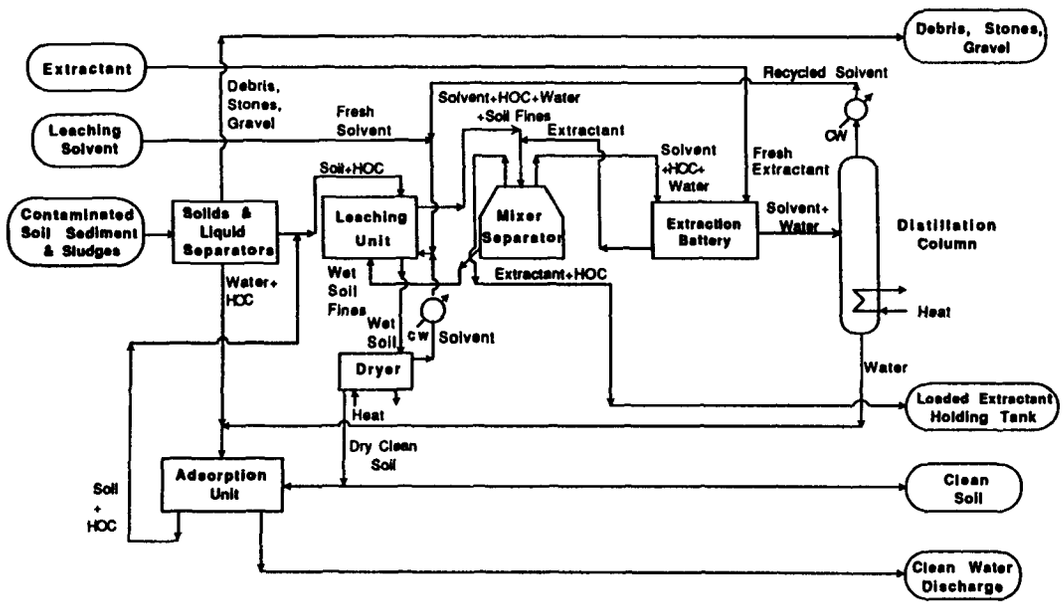

Figure 1. LEEP Technology Flow Diagram.

the same material. Also, the sectionalized design of the leaching unit allows the simultaneous use of different leaching solvents.

WASTE APPLICABILITY:

The process was originally designed to remove polychlorinated biphenyls (PCBs) from sediments. However, it has been shown to have much broader applications, including petroleum hydrocarbons, polyaromatic hydrocarbons, pesticides, wood preserving chlorophenol formulations, and tars.

LEEP is applicable to a wide range of solid matrices, containing particle sizes from 1/2" to the submicron range and having water concentrations from a few percent to 90%+.

LEEP has been used in bench-scale treatability studies to successfully decontaminate the following wastes:

- PCB contaminated solids:
  - Sediments from the Hudson River and Waukegan Harbor contaminated with PCBs (1242 and 1254) and mineral oil
  - Topsoil contaminated with PCBs (1260)
  - Surface cover from an electric utility containing PCBs (1260) and mineral oil
  - Subsoil consisting of silt and clay contaminated with PCBs (1260)
- Refinery sludges:
  - Rainwater impoundment sludge
  - Slop oil emulsion solids
- Oil contaminated solids:
  - Subsoil contaminated with cutting oil used in metal machining
  - Fill material contaminated with fuel oil #6
- Manufactured gas plant sites:
  - Soil contaminated with tar

STATUS:

The process concept was developed in 1987 under a U.S. EPA research grant. The technology was accepted into the SITE Emerging Technologies Program in June 1989. Bench-scale process optimization and engineering and construction of the pilot plant have been completed during the summer of 1990.

The technology developer (ART International, Inc.) has conducted bench-scale treatability studies. These will be followed by pilot plant feasibility studies on materials from the Hudson River and from sites of several industrial clients. The same approach is to be taken with material from Superfund sites; several projects are planned for the near future.

ART International, Inc. has obtained a treatability study permit from the New Jersey Department of Environmental Protection (NJDEP) to conduct bench-scale and pilot-scale treatability studies at the ART International facility.

The first trailer-mounted commercial unit is scheduled to be available by the end of 1991.

FOR FURTHER INFORMATION:

EPA Project Manager:
S. Jackson Hubbard
U.S. EPA
Risk Reduction Engineering Laboratory
26 West Martin Luther King Drive
Cincinnati, Ohio 45268
513-569-7507
FTS: 684-7507

Technology Developer Contact:
Werner Steiner
ART International, Inc.
273 Franklin Road
Randolph, New Jersey 07869
201-361-8840

FERRO CORPORATION
(Waste Vitrification Through Electric Melting)

TECHNOLOGY DESCRIPTION:

Vitrification technology converts contaminated soils, sediments, and sludges into oxide glasses, rendering them non-toxic and suitable for landfilling as a nonhazardous material. Inorganic and toxic species are chemically bonded into an oxide glass and are changed chemically to a non-toxic form.

Two requirements must be met to successfully vitrify soils, sediments, and sludges: (1) the development of glass compositions tailored to the waste being treated; and (2) the development of a glass melting technology that can convert the waste and additives into a stable glass without producing toxic emissions.

Because of a low toxic emission rate, an electric melter may be more advantageous than a fossil-fuel melter for vitrifying toxic wastes.

In an electric melter, molten glass, an ionic conductor of relatively high electrical resistivity, can be kept molten through joule heating. As a consequence, electric melters process waste under a relatively thick blanket of feed material, which limits the emission of hot gases (Figure 1). This blanket essentially forms a counter-flow scrubber for volatile emissions. In contrast, fossil fuel melters have large, exposed molten glass surface areas from which hazardous constituents can volatilize into the ambient air. Typical experience with commercial electric melters has shown that the loss of inorganic volatile constituents (e.g., B_2O_3 or PbO), which is high in fossil fuel

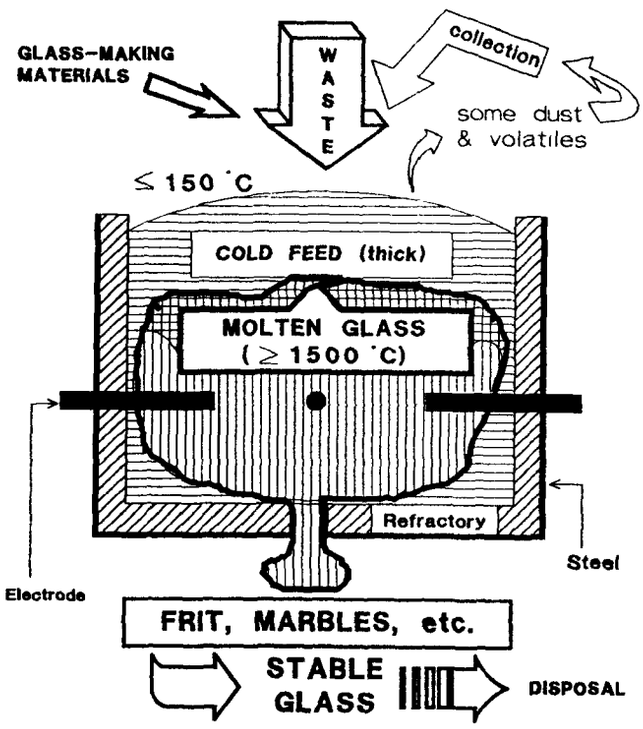

Figure 1. Electric Furnace Vitrification.

melters, is significantly reduced. Because of its low emission rate and small volume of exhaust gases, electric melting is a promising technology for incorporating high-level nuclear waste into a stable glass.

WASTE APPLICABILITY:

Vitrification presents a viable option for stablizing inorganic components found in hazardous waste. In addition, the very high temperature involved in glass production (approximately 1500° C) will decompose organic material in the waste to relatively harmless components, which can be removed easily from the low volume of melter off-gas.

STATUS:

Initial testing, scheduled for late 1990 to early 1991, will focus on developing a glass chemistry suitable for synthetic soil matrix SSM IV as defined by RREL Risk Control Branch. A synthetic soil has been chosen to alleviate permitting complications that would arise with the excavation and transport of a Superfund site waste. EP Toxicity and TCLP protocols will be used to define glass compositions that would convert the hazardous waste into nonhazardous waste. Glass properties required for melter operation will also be measured.

Electric melter trials will begin once the glass composition is established. Initial trials will be conducted in a laboratory melter with a maximum melting rate of 20 pounds/hour of glass product. The trials will establish initial operating conditions and provide operational experience that will be used to scale the technology to a pilot melter capable of producing glass at a rate of 100-200 pounds/hour. Final evaluations of the product glass and the emission rate will be obtained from these pilot melter trials.

FOR FURTHER INFORMATION:

EPA Project Manager:
Randy Parker
U.S. EPA
Risk Reduction Engineering Laboratory
26 West Martin Luther King Drive
Cincinnati, Ohio 45268
513-569-7271
FTS: 684-7271

Technology Developer Contact:
Emilio D. Spinosa
Research Associate
Ferro Corporation, Corporate Research
7500 East Pleasant Valley Road
Independence, OH 44131
216-641-8580

HARMON ENVIRONMENTAL SERVICES, INC.
(Soil Washing)

TECHNOLOGY DESCRIPTION:

Solvent washing is a method of cleaning soils contaminated with heavy organic compounds, such as PCBs (polychlorinated biphenyls) and chlorodibenzodioxins (dioxins). This method is based on a patented solvent blend that has successfully reduced PCB concentrations in soil to less than 2 ppm, the level at which soil can be placed at the site without containment. The solvent used in soil washing is critical to the success of the system. It should be immiscible with water (so that the water naturally found on the soil will be displaced) and be able to break up soil clods without grinding or shredding. Depending on the solvent used, this technology can be tailored to remove most organic constituents from solid matrices.

The solvent washing process is analogous to dry-cleaning clothing (Figure 1). A soil/solvent contactor is used to mix contaminated solids with a solvent. The mixture is agitated for an appropriate length of time (usually one hour), and then the solvent with the dissolved organic contaminant is drawn off. A fraction of the solvent remains mixed with the solids. The solvent is typically removed by subsequent washes until the solid is sufficiently decontaminated.

The solvent from each wash is delivered to a reclamation system, where it is distilled. The contaminant is concentrated as a still bottom. The still bottom, a small volume of the original soil, and a liquid residue can be further treated off- or on-site depending on economics and other considerations. Once the

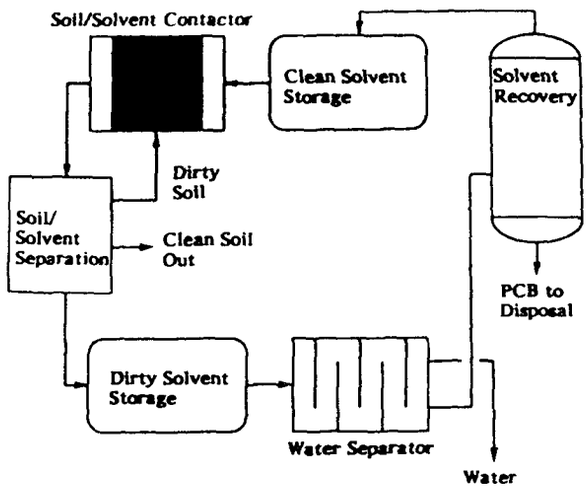

Figure 1. Simplified process schematic.

desired level of decontamination is achieved, the residual solvent is removed from the soil by steam stripping. To facilitate this removal, a solvent with a high vapor pressure should be used.

Aqueous discharges of this process are limited to non-contact cooling water and the water that is initially present in the soil. The latter discharge is a very clean, low-volume material that typically does not require additional treatment prior to discharge.

Unlike high-temperature processes such as incineration, this process leaves the soil matrix unchanged. The technology produces clean soil suitable for sustaining vegetation. Process equipment is mobile, operates at low temperatures, is totally enclosed (thereby producing virtually no air emissions) and generates very few residual wastes.

WASTE APPLICABILITY:

This technology has been shown to successfully clean metal foil, paper and sand, clay soils, high-organic soils, and soils mixed with organic matter (such as leaves). It can be applied to soil contaminated with high molecular weight organic compounds, including PCBs and dioxins. Although the work to date has emphasized PCB decontamination, tests show that the technology can also remove chlorodibenzofurans and most types of petroleum products and oils.

STATUS:

Second-year funding for the project has been approved. Laboratory and pilot-scale programs are complete, and an interim report has been prepared.

FOR FURTHER INFORMATION:

EPA Project Manager:
S. Jackson Hubbard
U.S. EPA
Risk Reduction Engineering Laboratory
26 West Martin Luther King Drive
Cincinnati, Ohio 45268
513-569-7507
FTS: 684-7507

Technology Developer Contact:
William C. Webster
Harmon Environmental Services, Inc.
1530 Alabama Street
Auburn, AL 36830
205-821-9253

INSTITUTE OF GAS TECHNOLOGY (Fluid Extraction-Biological Degradation Process)

TECHNOLOGY DESCRIPTION:

The Fluid Extraction-Biological Degradation (FEBD) Process is a three-step process for the effective remediation of organic contaminants from soil (Figure 1). It combines three distinct technologies: (1) fluid extraction and separation, which removes organics from contaminated solids; (2) separation, which transfers pollutants from an extract to a biologically-compatible solvent; and (3) biological treatment, which degrades organic pollutants to innocuous byproducts.

Contaminants must first be extracted from the soil. Excavated soils are placed in a pressure vessel and extracted with a recirculated stream of supercritical or near-supercritical fluid.

Following extraction, organic contaminants are collected in a separation solvent. Clean extraction solvent is recycled to the extraction stage. The separation solvent containing the contaminants is sent to the final stage of the process, where biodegradation is used to degrade the waste to carbon dioxide and water.

Biodegradation is achieved in above-ground aerobic bioreactors, using mixtures of bacterial cultures. Cultures are selected based on site characteristics. For example, if a site is contaminated primarily with polyaromatic hydrocarbons, such as naphthalene, phenanthrene, fluorine, pyrene, and others, cultures able to grow at the expense of these hydrocarbons are used in the biological treatment stage.

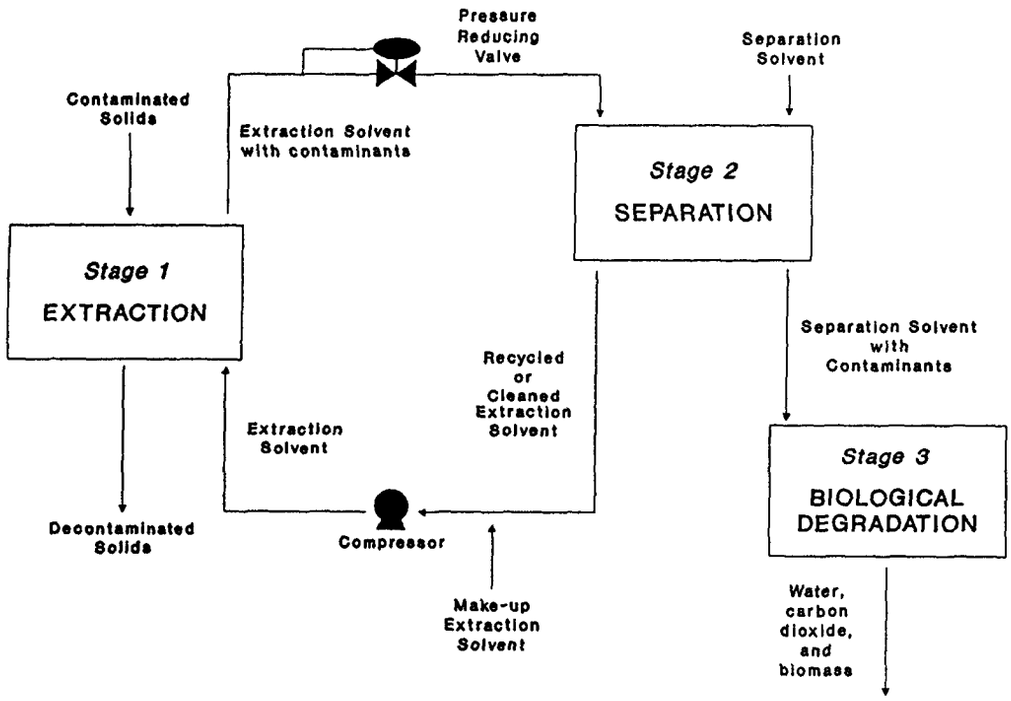

Figure 1. Overview of the Fluid Extraction-Biological Degradation Process.

WASTE APPLICABILITY:

This technology removes organic compounds from contaminated solids. It is more effective on some classes of organics, such as hydrocarbons (for example, gasoline and fuel oils), than on others, such as halogenated solvents and PCBs.

STATUS:

This technology was accepted into the SITE Emerging Technologies Program in July 1990. The developer is preparing the work plan and quality assurance project plan for U.S. EPA approval.

FOR FURTHER INFORMATION:

EPA Project Manager:
Annette Gatchett
U.S. EPA
Risk Reduction Engineering Laboratory
26 West Martin Luther King Drive
Cincinnati, Ohio 45268
513-569-7856
FTS: 684-7856

Technology Developer Contact:
W. Kennedy Gauger
Institute of Gas Technology
3424 South State Street
Chicago, IL 60616
312-567-3947

INSTITUTE OF GAS TECHNOLOGY
(Fluidized Bed Cyclonic Agglomerating Incinerator)

TECHNOLOGY DESCRIPTION:

The Institute of Gas Technology (IGT) has developed a two-stage, fluidized bed/cyclonic agglomerating incinerator based on a combination of technologies developed at IGT over many years. In the combined system, solid, liquid, and gaseous organic waste can be efficiently destroyed while solid inorganic contaminants are combined within a glassy matrix suitable for disposal in an ordinary landfill.

The first stage of the incinerator is an agglomerating fluidized-bed reactor, which can operate either under substoichiometric conditions or with excess air. The system can operate over a wide range of conditions, from low temperature (desorption) to high temperature (agglomeration), including the gasification of high BTU wastes. With a unique distribution of fuel and air, the bulk of the fluidized-bed is maintained at 1500-2000° F, while the central spout temperature can be varied between 2000 and 3000° F.

When the contaminated soils and sludges are fed into the fluidized bed, the combustible fraction of the waste undergoes a rapid gasification/combustion, producing gaseous components. The solid fraction, containing metal contaminants, undergoes a chemical transformation in the hot zone, and is agglomerated into glassy essentially nonleachable pellets.

The gaseous products leaving the fluidized bed may contain unburned hydrocarbons, furans, dioxins, and carbon monoxide as well as the products of complete combustion, carbon

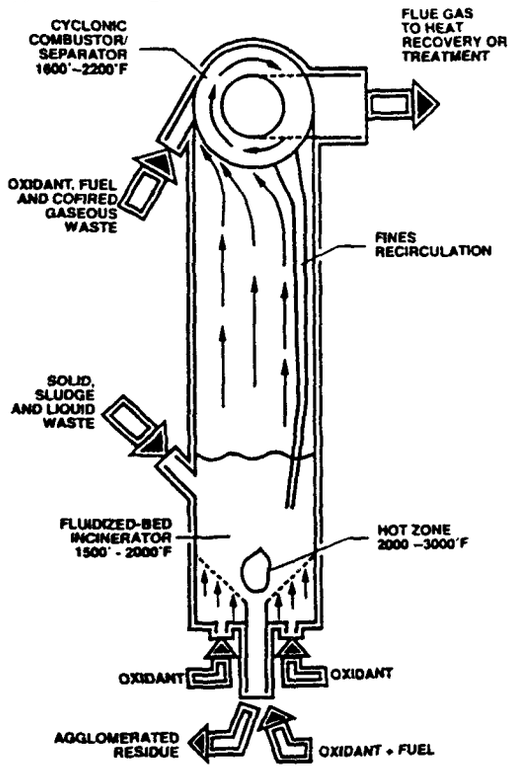

Figure 1. Schematic of Two-Stage Fluidized-Bed/Cyclonic Agglomerating Incinerator.

dioxide and water. The product gas from the fluidized bed is fed into the second stage of the incinerator, where it is further combusted at a temperature of 1600 to 2200° F. The second stage is a cyclonic combustor/separator which provides sufficient residence time to oxidize carbon monoxide and organic compounds to carbon dioxide and water vapor, with a combined destruction removal efficiency greater than 99.99%.

IGT's two-stage fluidized bed/cyclonic agglomerating incinerator is not an entirely new concept, but rather an improvement based on experience with other fluidized bed and cyclonic combustion systems. The patented sloped grid design and ash discharge port in this process were initially developed for IGT's U-GAS coal gasification process. The cyclonic combustor/separator is a modification of IGT's low emissions combustor.

WASTE APPLICABILITY:

This two-stage incinerator can destroy organic contaminants in gaseous, liquid, and solid wastes, including soils and sludges.

STATUS:

This technology was accepted into the SITE Emerging Technologies Program in July 1990. The developer is currently preparing a quality assurance program plan. The batch 6-inch diameter fluidized-bed unit is currently being modified for testing to establish operating regimes for soil agglomeration. A 6-ton per day pilot plant unit is being designed.

FOR FURTHER INFORMATION:

EPA Project Manager:
Teri Shearer
U.S. EPA
Risk Reduction Engineering Laboratory
26 West Martin Luther King Drive
Cincinnati, Ohio 45268
513-569-7949
FTS: 684-7949

Technology Developer Contact:
Amir Rehmat
Institute of Gas Technology
3424 South State Street
Chicago, Illinois 606016
312-567-5899

IT CORPORATION
(Batch Steam Distillation/Metal Extraction)

TECHNOLOGY DESCRIPTION:

The Batch Steam Distillation/Metal Extraction treatment process is a two-stage system to treat soils contaminated with both organics and inorganics. This technology uses conventional, readily available process equipment, and does not produce hazardous combustion products. Hazardous materials are separated from soils as concentrates, which can then be disposed of or recycled. After treatment, the soil is decontaminated and may be returned to the site.

Volatile organics are separated from the feed waste (soil) by direct steam injection (Figure 1). The resulting vapors are condensed and decanted to separate organic liquids from the aqueous phase. The soil is then transferred as a slurry to the metals extraction step (Figure 2). Condensed water from this step can be recycled through the system after further treatment to remove soluble organics.

After the volatiles are separated, heavy metals are removed from the soil slurry by hydrochloric acid. After contact with the acid, the solids are settled out, and the acid solution containing the metals is pumped out. Most heavy metals are converted to chloride salts in this step. This stream is then charged to a batch distillation system, where hydrochloric acid is recovered. The bottoms from this still, containing the heavy metals, are precipitated as hydroxide salts, and drawn off as a sludge for off-site disposal or recovery.

WASTE APPLICABILITY:

This process is applicable to soils contaminated with both organics and heavy metals.

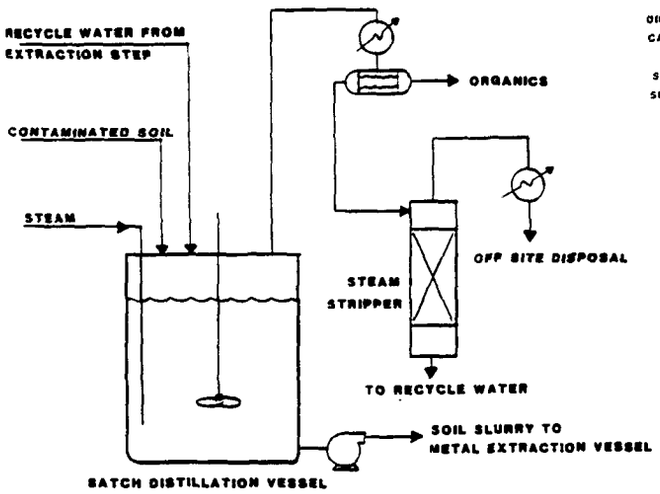

Figure 1. Batch steam distillation step.

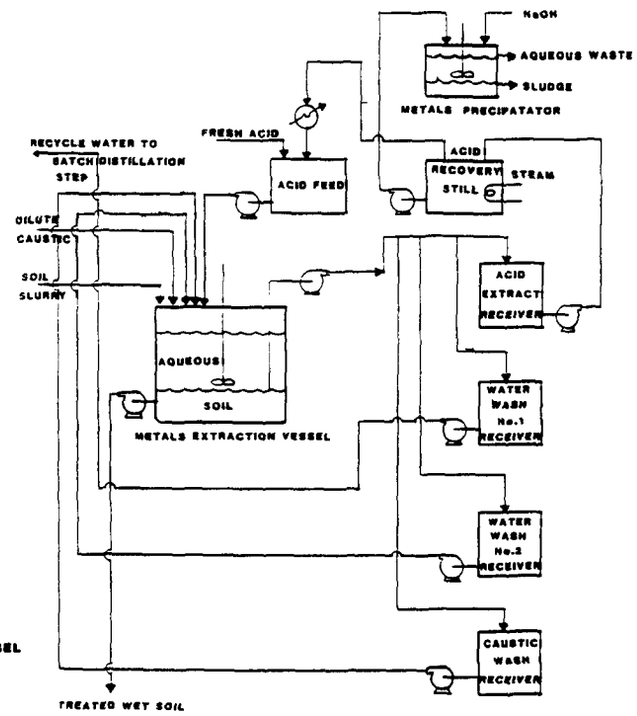

Figure 2 Metals extraction step.

STATUS:

Bench-scale tests have shown that batch steam distillation of three soils was effective in reducing a wide range of chlorinated and BTEX volatiles to below detectable limits (~25 ppb). Heavy metal extraction efficiency was unaffected by hydrochloric acid strength. Conditions for the pilot tests, scheduled for the third quarter of 1990, have been established. Analytical procedures must be refined.

FOR FURTHER INFORMATION:

EPA Project Manager:
Ronald Lewis
U.S. EPA
Risk Reduction Engineering Laboratory
26 West Martin Luther King Drive
Cincinnati, OH 45268
513-569-7856
FTS: 684-7856

Technology Developer Contact:
Robert D. Fox
IT Corporation
312 Directors Drive
Knoxville, TN 37923
615-690-3211

IT CORPORATION
(Photolytic/Biological Soil Detoxification)

TECHNOLOGY DESCRIPTION:

This technology is a two-stage, in-situ photolytic/biological detoxification process for shallow soil contamination. The first step in the process is to degrade the organic contaminants using ultraviolet (UV) radiation. Degradation is enhanced by adding detergent-like chemicals (surfactants) to mobilize the contaminants. Photolysis of the original contaminants is expected to convert them to less resistant compounds. Biological degradation, the second step, is then used to further destroy the organic contamination and detoxify the soil. The rate of photolytic degradation is several times faster with artificial UV light than with natural sunlight.

When using sunlight for soil with shallow contamination, the soil is tilled with a power tiller and sprayed with surfactant (Figure 1). Tilling and spraying is repeated frequently to expose new surfaces. Water may also be added to maintain soil moisture. UV lights with parabolic reflectors are suspended over the soil to irradiate it. After photolysis is complete, biodegradation activity is enhanced by adding microorganisms and nutrients and by further tilling the soil.

When these techniques are applied to soils with deep contamination, the excavated soil is treated in a specially constructed, RCRA-compliant shallow treatment basin.

The only residue from this combination of technologies is soil contaminated with both the end metabolites of the biodegradation processes and the surfactants that are used. The surfactants are common materials used in agricultural formulations.

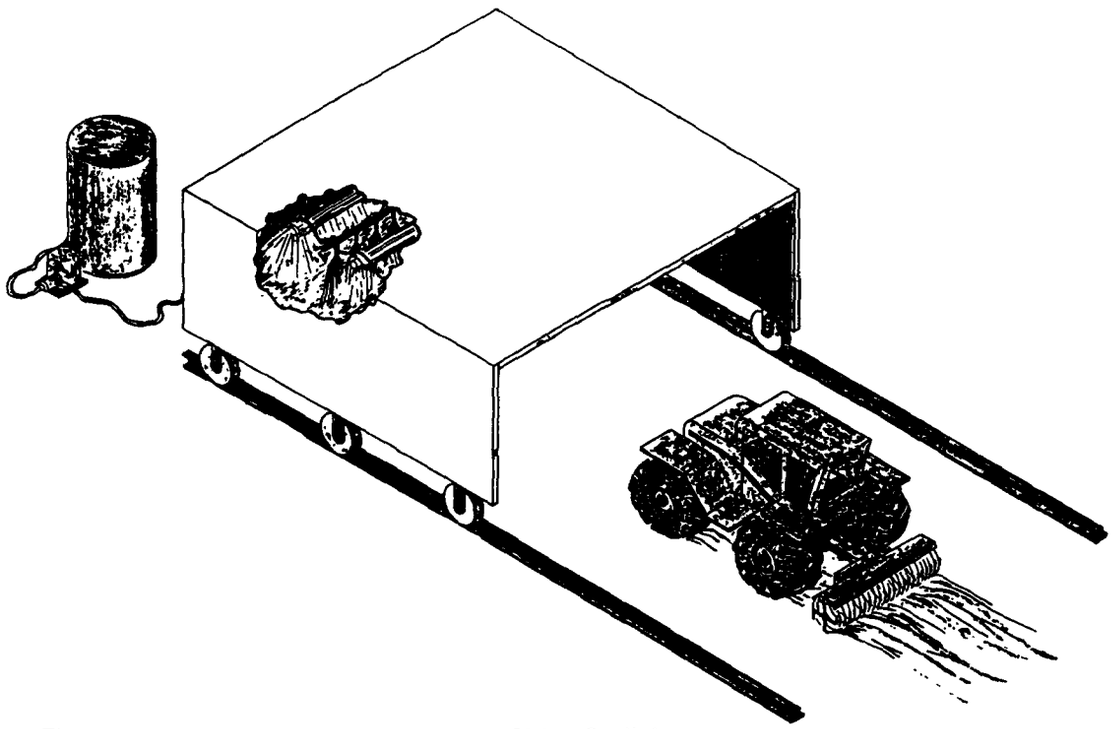

Figure 1. Photolytic Degradation Process Using Sunlight.

WASTE APPLICABILITY:

This technology destroys organics, particularly dioxins, PCBs, and other polychlorinated aromatics, and PAHs.

STATUS:

Bench-scale testing will take place during the last half of 1990 and the first half of 1991; pilot tests in the following year. Two contaminated soils will be tested -- one with PCBs and one with dioxin. The test soils and the necessary permits are being sought.

FOR FURTHER INFORMATION:

EPA Project Manager:
Randy A. Parker
U.S. EPA
Risk Reduction Engineering Laboratory
26 West Martin Luther King Drive
Cincinnati, Ohio 45268
513-569-7271
FTS: 684-7271

Technology Developer Contact:
Robert D. Fox
IT Corporation
312 Directors Dr.
Knoxville, TN 37923
615-690-3211

MEMBRANE TECHNOLOGY AND RESEARCH, INC. (Membrane Process for Removal of Volatile Organics from Contaminated Air Streams)

TECHNOLOGY DESCRIPTION:

This technology uses synthetic polymer membranes to remove organic contaminants from gaseous waste streams. Organic contaminants are recovered in liquid form and may be recycled or disposed off-site.

Solvent-laden contaminated air at atmospheric pressure contacts one side of a membrane that is permeable to the organic material but impermeable to air (Figure 1). A partial vacuum on the other side of the membrane draws the organic vapor through the membrane. The organic vapor is then cooled and condensed. The small volume of air that permeates the membrane is recycled through the system.

The treated stream may be vented, recycled for further use at the site, or passed to an additional treatment step. For more dilute waste streams, a two-stage process is required. Organic vapor is concentrated tenfold in the first stage, and an additional tenfold in the second stage.

The system is transportable and is significantly smaller than a carbon adsorption system of similar capacity. The process generates a clean air stream and a pure liquid product stream that can be incinerated. Disposal problems associated with adsorption technologies are eliminated.

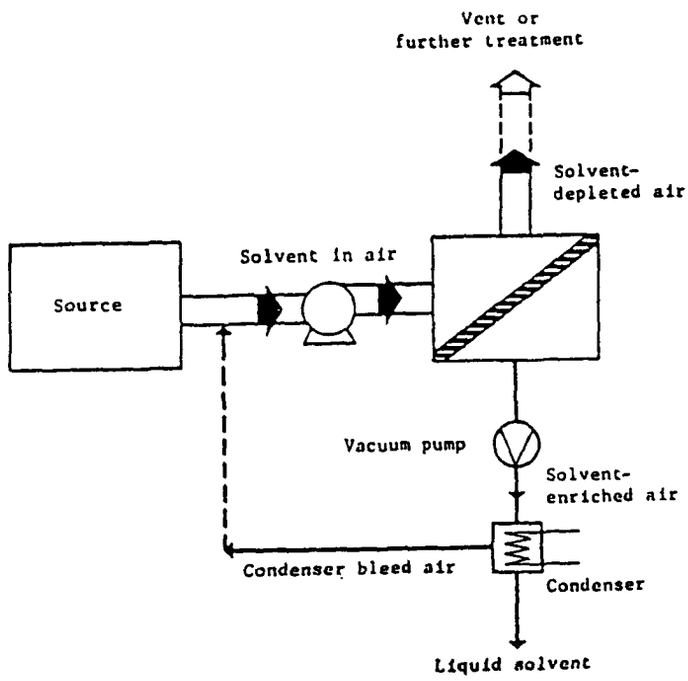

Figure 1. Schematic of a simple one-stage solvent vapor separation and recovery process.

WASTE APPLICABILITY:

Membrane systems are applicable to most airstreams containing halogenated and nonhalogenated contaminants. Typical applications would be the treatment of air stripper exhaust before discharge to the atmosphere, reduction of process vent emissions such as those now regulated by EPA source performance standards for the synthetic organic chemical manufacturing industry, and recovery of CFCs and HCFCs. Effectiveness depends on the class of organic compound.

STATUS:

The process has been tested on the bench scale and has achieved removal efficiencies of greater than 90% for selected organics.

This technology has been successfully field demonstrated in three industrial processes, including CFC recovery from process vents, and halocarbon blowing agent recovery in a flexible foam manufacturing operation. The technology has been tested on air streams contaminated with a wide range of organics, in concentrations of 100 to 40,000 ppm. The treatment of contaminated air streams generated at Superfund sites is considered to be a good opportunity to demonstrate this technology.

FOR FURTHER INFORMATION:

EPA Project Manager:
Paul R. dePercin
U.S. EPA
Risk Reduction Engineering Laboratory
26 West Martin Luther King Drive
Cincinnati, OH 45268
513-569-7797
FTS: 684-7797

Technology Developer Contact:
Dr. J. G. Wijmans
Membrane Technology and Research, Inc.
1360 Willow Road
Menlo Park, CA 94025
415-328-2228

MONTANA COLLEGE OF MINERAL SCIENCE & TECHNOLOGY
(Air-Sparged Hydrocyclone)

TECHNOLOGY DESCRIPTION:

During the past decade, large mechanical flotation cells (aerated-stirred tank reactors) have been designed, installed, and operated. In addition, considerable effort has been made to develop column flotation technology in the United States and elsewhere, leading to a number of industrial installations. Nevertheless, for both mechanical and column cells, the specific flotation capacity is generally limited to 1 to 2 tons per day (tpd) per cubic foot of cell volume.

In contrast with conventional flotation equipment, the Air-Sparged Hydrocyclone (ASH) being tested by Montana Tech will have a specific flotation capacity of at least 100 tpd per cubic foot of cell volume.

Standard flotation techniques used in industrial mineral processing are effective ways of concentrating materials. However, metal value recovery is never complete. The valuable material escaping the milling process is frequently concentrated in the very fine particle fraction. The ASH was developed under Dr. Jan Miller's research group at the University of Utah during the early 1980's to achieve fast flotation of fine particles in a centrifugal field.

The ASH consists of two concentric right-vertical tubes with a conventional cyclone header at the top and a froth pedestal at the bottom. The inner tube is a porous tube through which air is sparged radially. The outer tube serves as an air jacket to provide for even distribution of air through the porous inner tube.

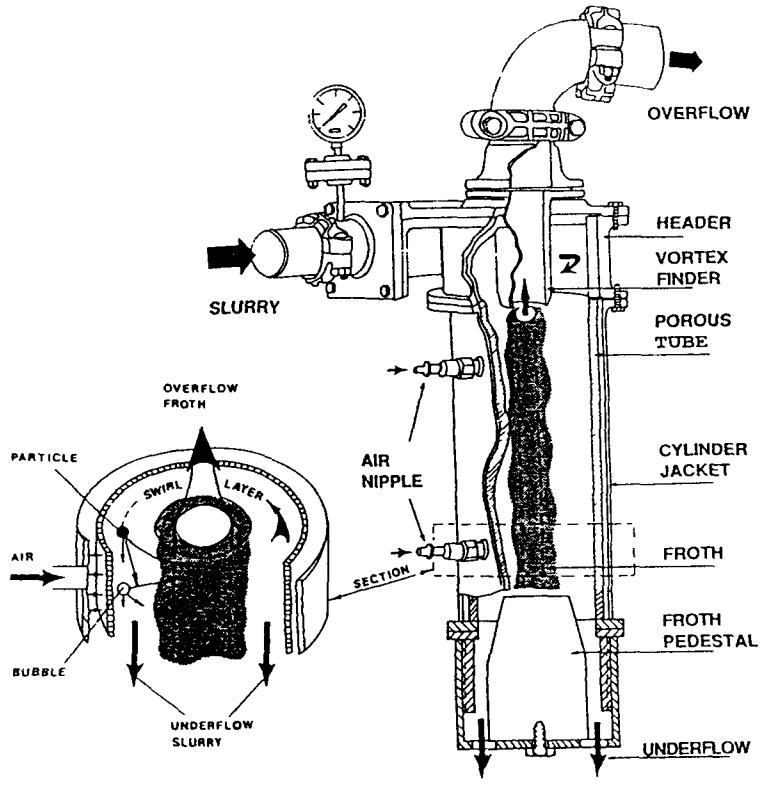

Figure 1. Air-sparged hydrocyclone.

The slurry is fed tangentially through the conventional cyclone header to develop a swirl flow of a certain thickness in the radial direction (the swirl-layer thickness) and is discharged through an annular opening between the insides of the porous tube wall and the froth pedestal. Air is sparged through the jacketed, inner porous tube wall and is sheared into small bubbles that are radially transported, together with attached hydrophobic particles, into a froth phase that forms on the cyclone axis. The froth phase is stabilized and constrained by the froth pedestal at the underflow, moves towards the vortex finder of the cyclone header, and is discharged as an overflow product. Hydrophilic particles (water wetted) generally remain in the slurry phase and are discharged as an underflow product through the annulus created by the froth pedestal.

WASTE APPLICABILITY:

This technology is designed for treating mining industry wastes, to remove toxic materials and recover low-concentrations of metals in a commercial environment.

STATUS:

This technology was accepted into the SITE Emerging Technologies Program in June 1990. A cooperative has been signed.

Currently, a quality assurance plan is being prepared.

FOR FURTHER INFORMATION:

EPA Project Manager:
Eugene F. Harris
U.S. EPA
Risk Reduction Engineering Laboratory
26 West Martin Luther King Drive
Cincinnati, Ohio 45268
513-569-7862
FTS: 684-7862

Technology Developer Contact:
Theodore Jordan
Montana College of Mineral Science Technology
West Park Street
Butte, Montana 57901
406-496-4112

NEW JERSEY INSTITUTE OF TECHNOLOGY (Ghea Associates Process)

TECHNOLOGY DESCRIPTION:

The technical approach of the Ghea Associates process is to use selected surfactants (detergent-like chemicals) in water solution to extract both inorganic and organic contaminants from the soil. The resulting mixture is purified by separating out the surfactant/contaminant complex, and splitting it into a surfactant fraction, which is recovered for repeated use, and a contaminants fraction.

The cleaning power of surfactants comes from the presence of both hydrophilic ("water-liking") and lipophilic ("oil-liking") groups on the same molecule. Therefore, surfactants can link an oily contaminant with the water, pulling it from its matrix the way laundry soap (a detergent) pulls soil from cloth into the wash water. Surfactants enable water to hold large quantities of oil contaminants by forming "micelles", tiny capsules of surfactant filled with the contaminant.

A variation uses surfactants to form stable bubbles, which can lift heavy particles to the top of the solution; this is called "foam flotation." This process combines "foam flotation" with ultrafiltration to achieve complete recovery of the surfactants from the surfactant/contaminant complex, as well as the reduction of dissolved metals.

After extraction, solids are filtered out of the washing solution. These solids are rinsed and disposed of after they are confirmed to be pure. The temperature or pH of the solution is changed so that the surfactant/contaminant separates from the water. The water is again treated and recycled through the system or discharged to the sewer. The surfactant is separated from the contaminants and also recycled. The contaminated fraction will be disposed of according to federal regulations.

This process uses the appropriate surfactant or surfactant mixtures to separate the contaminants of interest. Dosages, mixing

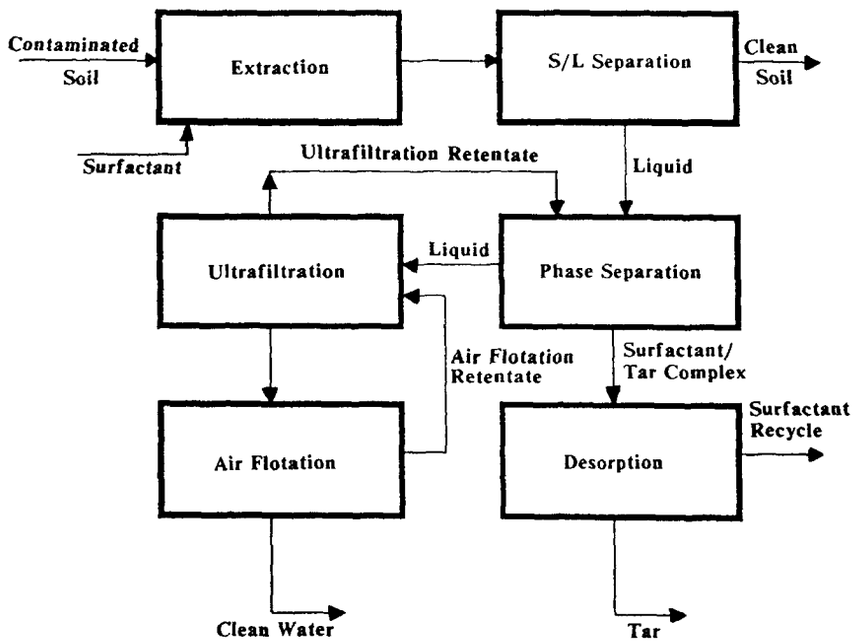

Figure 1. Process flow diagram.

time, and the precise means of separating the fraction of the wash water will vary with the situation.

WASTE APPLICABILITY:

The technology is applicable to mixtures of widely varying compositions, including organic, inorganic, volatile, and nonvolatile contaminants.

STATUS:

The technology was accepted into the SITE Emerging Technologies Program in July 1990. The developer is preparing the work plan and quality assurance project plan for U.S. EPA approval. Treatability test results are shown in Table 1.

FOR FURTHER INFORMATION:

EPA Project Manager:
Annette Gatchett
U.S. EPA
Risk Reduction Engineering Laboratory
26 West Martin Luther King Drive
Cincinnati, Ohio 45268
513-569-7697
FTS: 684-7697

Technology Developer Contact:
Itzhak Gotlieb
New Jersey Institute of Technology
Department of Chemical Engineering
Newark, New Jersey 07102
201-596-5862

TABLE 1
SUMMARY OF TREATABILITY TEST RESULTS
(Concentrations in ppm by weight)

System	Untreated Sample	Treated Water	Treated Soil	% Removal (Soil)
BTX in water	2750	<5.0*		
Trinitrotoluene in Water	180	<0.8*		
PHC in Soil	3540	<1.0*	3.4	99.9
PCBs + PHC in Soil:				
PCB	130	<0.1*	2.5	98.1
PHC	5600	<1.0*	5.1	99.9
Tar Contaminated Soil:				
Benzo-a-pyrene	28.8		<0.1*	>99.6
Benz-k-fluoran	24.1		4.4	81.7
Chrysene	48.6		<0.1*	>99.8
Benzoanthracene	37.6		<0.1*	>99.7
Pyrene	124.2		<0.1*	>99.9
Anthracene	83.6		<0.1*	>99.9
Phenanthrane	207.8		<0.1*	>99.9
Fluorene	92.7		<0.1*	>99.9
Dibenzofuran	58.3		<0.1*	>99.8
1-Me-Naphthalene	88.3		1.3	98.5
2-Me-Naphthalene	147.3		<0.1*	>99.9
Cobalt	40		7.5	81.3
Nickel	105		22.5	78.6
Chromium	320		110.	65.6
Total Tar	6 wt. %		U.D.	>99.9

Legend:

BTX = Benzene, toluene, and xylene (saturated mixture)
PHC = Petroleum hydrocarbons (mostly gasoline and diesel oil)
PCBs = Polychlorinated biphenyls
U.D. = Undetectable by Soxhlet extraction and colorimetry
* = Detection limit

J.R. SIMPLOT COMPANY
(Anaerobic Biological Process)

TECHNOLOGY DESCRIPTION:

This technology involves the bioremediation of soils and sludges contaminated with nitroaromatics. Nitroaromatic compounds, particularly nitrotoluenes used as explosives, have become serious environmental contaminants at military locations nationwide. Pesticides are another example of nitroaromatic environmental contaminants.

Considerable work during the 1970s indicated that complete biodegradation of 2,4,6-trinitrotoluene (TNT) and similar highly nitrated compounds did not occur. Biological reductions ($R\text{-}NO_2 \rightarrow R\text{-}NO \rightarrow R\text{-}NHOH \rightarrow R\text{-}NH_2$) and polymerization reactions appeared to occur, but actual degradations of aromatic nuclei generally were not observed.

This previous work involved studies of aerobic systems, such as activated sludge and thermophilic composts, and pure culture studies of aerobic fungi and bacteria, such as pseudomonads. Some studies examined pure cultures of anaerobic bacteria (Veillonella alkalescens) with similar results.

Recently, it was discovered that anaerobic microbial mixtures can completely destroy many recalcitrant chemicals, such as chloroform, benzene, chlorophenols, that had been considered essentially nonbiodegradable under such conditions. Extensive work with such microbes indicates that these systems are capable of complete mineralization of nitroaromatic pollutants.

Anaerobic microbial mixtures have been developed for both the pesticide dinoseb (2-sec-butyl-4,6-dinitrophenol) and TNT. These mixtures completely degrade their target molecules to simple, nonaromatic products over a period of a few days. Transient formation of reduced intermediates (e.g., amino-nitrotoluenes) is observed. The consortia of microbes function at Eh's of -200 mV or more negative.

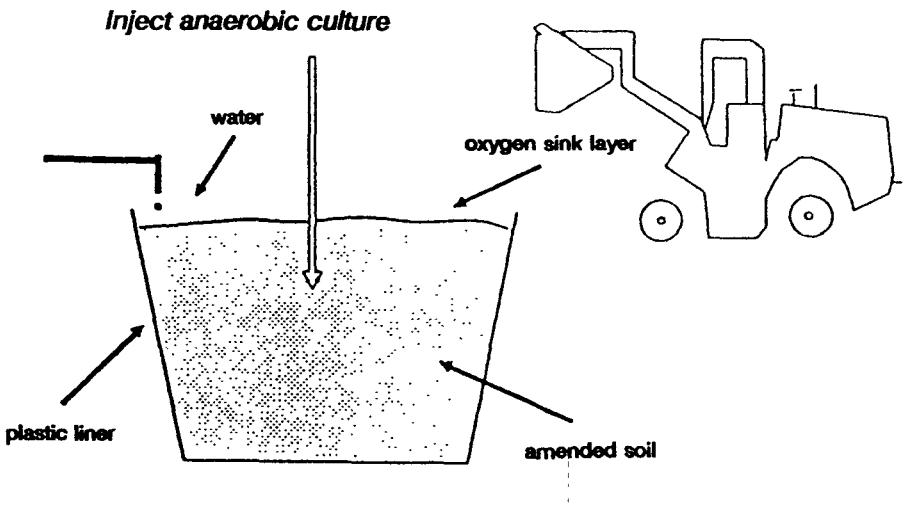

Figure 1. Cut-away view of the pilot-scale treatment.

Figure 1 is a cut-away view of the pilot-scale treatment unit; it can treat approximately 50 cubic meters of soil. The biodegradation process involves adding starch to flooded soils and sludges. An anaerobic, starch-degrading bacteria also may be introduced. After anaerobic conditions are established (at Eh equal to -200 mV), the nitroaromatic-degrading anaerobic microbial consortia will be injected to initiate nitroaromatic-pollutant destruction.

WASTE APPLICABILITY:

This technology is designed to treat soils contaminated with nitroaromatic pollutants. Anaerobic microbial mixtures have been developed for the pesticide dinoseb and for TNT.

STATUS:

Bench-scale processes have been developed and will be scaled up to pilot size under the Emerging Technologies Program.

FOR FURTHER INFORMATION:

EPA Project Manager:
Wendy Davis-Hoover
U.S. EPA
Risk Reduction Engineering Laboratory
26 West Martin Luther King Drive
Cincinnati, Ohio 45268
513-569-7206
FTS: 684-7206

Technology Developer Contact:
Douglas K. Sell
J.R. Simplot Company
P.O. Box 15057
Boise, ID 83715
208-389-7265

TRINITY ENVIRONMENTAL TECHNOLOGIES, INC.
(Ultrasonic Detoxification)

TECHNOLOGY DESCRIPTION:

The detoxification process consists of five stages: classification; caustic addition; ultrasonic irradiation; product testing; separation and neutralization.

Contaminated material such as soil, gravel, sludge, rags, paper, and plastic is first sized (crushed, milled, or cut) to pass through a 1-inch screen. The sized materials are augured from a temporary storage hopper into a mixing tank.

The mixing tank is capable of combining up to two 12-cubic-yard batches. Contaminated solids are mixed with water and caustic. A wetting agent is also added to permit the caustic solution to permeate the solids easily. The slurry formed is then pumped through a series of ultrasonic transducer flow-cells, where the slurry is destroyed by ultrasound.

Trinity Environmental Technologies, Inc. uses ultrasonic energy (high frequency sound waves) to produce an alternating adiabatic compression and rarefaction of the liquid media being irradiated.

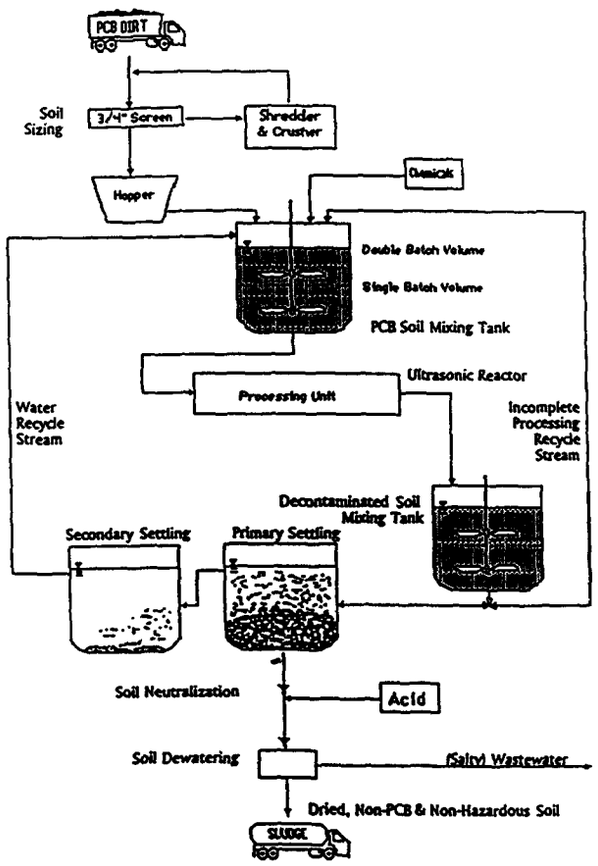

Figure 1. Process Flow Diagram for Ultrasonically Assisted Soil Detoxification Process.

Micro-voids form in the rarefaction part of the ultrasonic wave. These micro-voids contain vaporized liquid or gas that was previously dissolved in the liquid. This phenomenon is called cavitation.

The compression part of the wave violently collapses the micro-voids, producing high local pressures of up to 20,000 atmospheres and attaining transitory temperatures of up to 10,000 degrees Kelvin. Cavitation is believed to be the dominant driving force in the chemical dehalogenation of hazardous materials. The region of highest cavitation is between 1 and 50 kHz.

The treated slurry is next pumped into a holding tank and continuously mixed before a representative sample is drawn. When an analysis of the slurry shows the solids are decontaminated, the solids are separated from the decontaminated solution.

A polyelectrolyte or other flocculation aid is used to separate most of the soil from the slurry. Any suspended solids are filtered out of the solution recycle stream or reprocessed. After caustic neutralization, the solids are completely dewatered and suitable for replacement at the excavation site (in the case of soils) or sanitary landfill (in the case of contaminated clothing, rags, etc.). The by-products are non-hazardous.

WASTE APPLICABILITY:

The technology can be used for detoxifying PCB-contaminated solids, soils, and sludges.

Dichlorobenzene, PCBs, and other chlorinated compounds have been successfully dehalogenated to date. Compounds that are analogs to PCBs, such as polychlorinated dibenzodioxins and dibenzofurans, can also be destroyed with this process. Removing the halogens (chlorine, fluorine, bromine, etc.) from hazardous organic compounds reduces or eliminates their toxic properties.

The process can be operated at Trinity's TSCA approved facility. The stationary unit will be a test-bed for evaluating material from different PCB sites. The data gathered from this operation will be used to determine operational parameters for mobile processing units sent to the sites to complete the detoxification of the PCB-contaminated soil. The expected processing cost for PCB-contaminated soils is $300 to $400 per ton.

STATUS:

In approximately 12 months, Trinity will have a 1 to 10 ton per hour processor for handling PCB-contaminated solids.

This technology was accepted into the SITE Emerging Technologies Program in July 1990.

FOR FURTHER INFORMATION:

EPA Project Managers:
Norma Lewis and Kim Kreiton
U.S. EPA
Risk Reduction Engineering Laboratory
26 West Martin Luther King Drive
Cincinnati, Ohio 45268
513-569-7665
FTS: 684-7665

Technology Developer Contact:
Duane P. Koszalka
Trinity Environmental Technologies, Inc.
62 E. First Street
Mound Valley, Kansas 67354
316-328-3222

UNIVERSITY OF SOUTH CAROLINA
(In-Situ Mitigation of Acid Water)

TECHNOLOGY DESCRIPTION:

This technology addresses the acid drainage problem associated with exposed sulfide-bearing minerals (mine waste rock, abandoned metallic mines, etc.) and is an innovative technique for the in-situ mitigation of acid water. Acid drainage forms under natural conditions when iron disulphides (such as fool's gold) are exposed to the atmosphere and water and spontaneously oxidize to produce a complex of highly soluble iron sulfates. These salts readily hydrolyze to produce an acid, iron, and sulfate enriched drainage that adversely affects the environment.

The reclamation strategy works by modifying the hydrology and geochemistry of the site. This is accomplished through land surface reconstruction and selective placement of limestone.

The technique can be applied to any site located in a humid area where limestone is available as a neutralizing medium. Limestone is used as the alkaline source material because it has long-term availability, is generally inexpensive, and is safe to handle. For the chemical balances to be effective, the site must be located in an area of rainfall sufficient to produce seeps or drainages that continually contact the limestone. Thus rainfall helps to remediate the site, rather than increasing the acid drainage.

The overall conceptual model is presented in Figure 1 and is applicable primarily for mine construction. Surface depressions are constructed to collect surface runoff and funnel the water into the waste rock dump through "chimneys" constructed of alkaline material. Acidic material is capped with impermeable material to divert water away from the acid cores. Through this design, some acid production can be tolerated, but the net acid load will be lower than the alkaline load, resulting in benign, non-acid drainage.

MINE/BACKFILL CONSTRUCTION DESIGNED
TO MINIMIZE ACID PRODUCTION

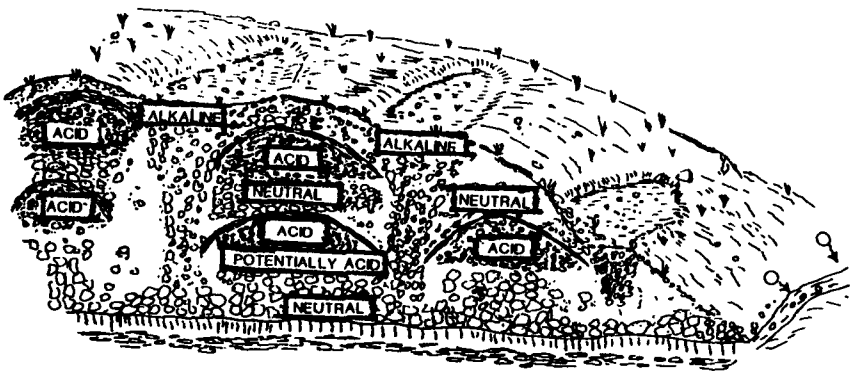

MANIPULATION of ACID and ALKALINE STRATA
and HYDROLOGY

Figure 1. Conceptual Model for the Abatement of Acid Drainages.

WASTE APPLICABILITY:

The technology is designed to neutralize acid drainage from abandoned waste dumps and mines.

STATUS:

This technology was accepted into the SITE Emerging Technologies Program in March 1990. Pilot-scale studies expected to be completed by the summer of 1991.

FOR FURTHER INFORMATION:

EPA Project Manager:
Roger C. Wilmoth
U.S. EPA
Risk Reduction Engineering Laboratory
26 West Martin Luther King Drive
Cincinnati, Ohio 45268
513-569-7509
FTS: 684-7509

Technology Developer Contact:
Frank T. Caruccio
Department of Geological Sciences
University of South Carolina
Columbia, SC 29208
803-777-4512

UNIVERSITY OF WASHINGTON (Adsorptive Filtration)

TECHNOLOGY DESCRIPTION:

This technology uses adsorptive filtration to remove inorganic contaminants (metals) from the liquid phase. An adsorbent, ferrihydrite, is applied to the surface of an inert substrate, such as sand, which is then placed in a vertical column (Figure 1). The column containing the coated sand acts as a filter and adsorbent. Once the adsorptive capacity of the column is reached, the metals are removed and concentrated for subsequent recovery using a pH-induced desorption process.

The sand is coated by heating it in an acidic ferric nitrate solution to 110° C. The resulting ferrihydrite-coated sand is insoluble at pHs above 1. As a result, acidic solutions can be used in the regeneration step to ensure complete metal recovery. There has been no apparent loss of treatment efficiency after tens of regeneration cycles.

In addition to substantially reduced operating costs. The advantages of this technology over conventional treatment technologies for metals are that it: (1) removes metals present as complexes, including metals complexed with some organics; (2) removes anions; and (3) acts as a filter to remove suspended matter from solution. In fact, coated sand is a better filter media than plain sand.

WASTE APPLICABILITY:

This process removes inorganic contaminants from aqueous waste streams. It is applicable to aqueous waste streams with a wide range of contaminant concentrations and pH values.

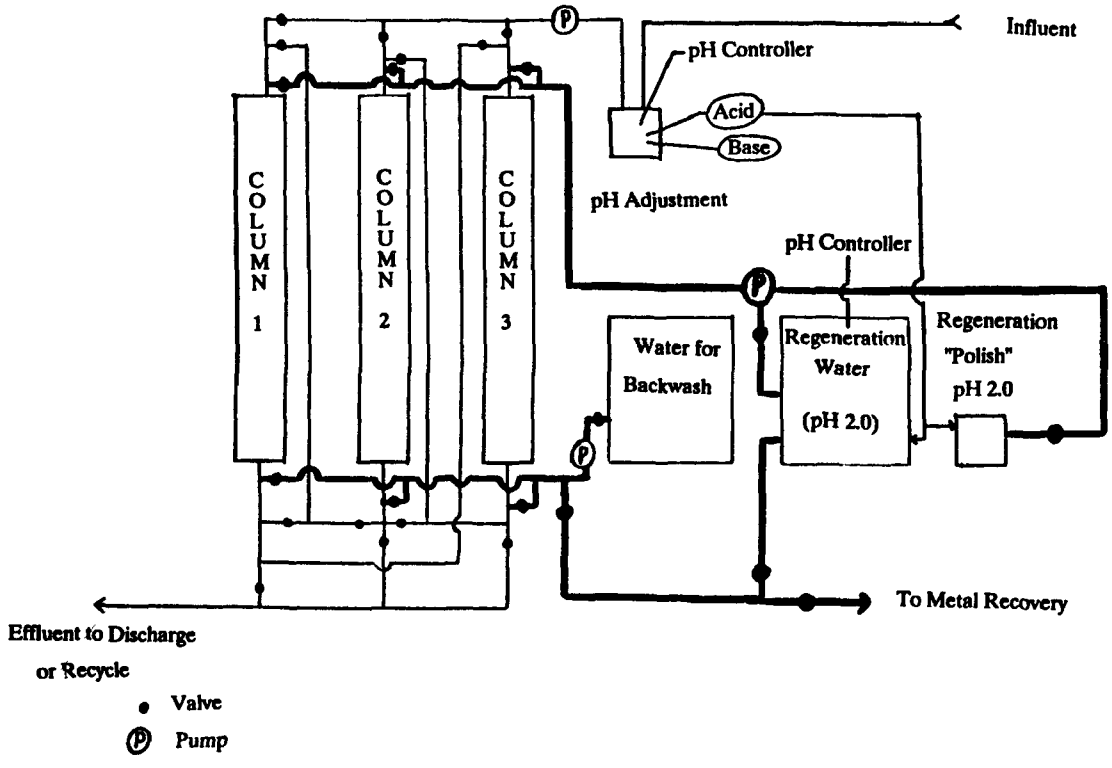

Figure 1. Schematic of Proposed Treatment System.

STATUS:

Synthetic solutions containing 0.5 ppm of Cu, Cd, or Pb have been treated in packed columns with retention times of 2 minutes. After approximately 5,000 bed volumes were treated, effluent concentrations were about 0.025 ppm for each metal, indicating a 95% removal efficiency. The tests were stopped at this point, even though the metals were still being removed; in other experiments the capacity of the media to adsorb copper was about 7000 mg per liter of packed bed.

When the columns were regenerated, the first batch of regenerant solutions contained about 500 ppm of metal each in the case of Pb or Cd, representing a concentration factor of about 1000 to 1. The copper data have not been analyzed yet. At a flow rate yielding a 2-minute retention time, it would have taken 10,000 minutes, or about 7 days of continuous flow operation, to treat the 5,000 bed volumes. However, because the system was not run continuously, treatment actually spanned a period of about three weeks.) Regeneration took about 2 hours.

The system has also been tested for treatment of rinse waters from a copper etching process at a printed circuitboard shop. The coated sand was effective at removing mixtures of soluble, complexed Cu and particulate Cu, as well as Zn and Pb, from these waters. When two columns were used in series, the treatment system was able to handle fluctuations in influent Cu concentration from less than ten up to several hundred mg/L.

FOR FURTHER INFORMATION:

EPA Project Manager:
Norma Lewis
U.S. EPA
Risk Reduction Engineering Laboratory
26 West Martin Luther King Drive
Cincinnati, Ohio 45268
513-569-7665
FTS: 684-7665

Technology Developer Contact:
Mark M. Benjamin
University of Washington
Department of Civil Engineering
Seattle, Washington 98195
206-543-7645

WASTEWATER TECHNOLOGY CENTER
(Cross-Flow Pervaporation System)

TECHNOLOGY DESCRIPTION:

Pervaporation is a process for removing volatile organic compounds (VOCs) from contaminated water. Permeable membranes that preferentially adsorb VOCs are used to partition VOCs from the contaminated water. The VOCs diffuse from the membrane/water interface through the membrane and are drawn off by a vacuum pump. Upstream of the vacuum pump, a condenser traps and contains the permeating vapors, with no discharge to atmosphere (Figure 1). The condensed organic vapors represent only a fraction of the initial wastewater volume, and may be sent for disposal at significant cost savings. Industrial waste streams may also be treated with this process and solvents may be recovered for reuse.

A modular separation unit has been constructed in which wastewater flows across the outside of a hollow fiber membrane. In this configuration, the vacuum pump is applied to the inside of the fiber. This design provides very high packing densities and specific surface areas that only very fine granular carbon can surpass. Modules can be constructed to minimize pressure drop and fouling, which is uncontrollable with loose fill. Therefore, pretreatment can be minimized.

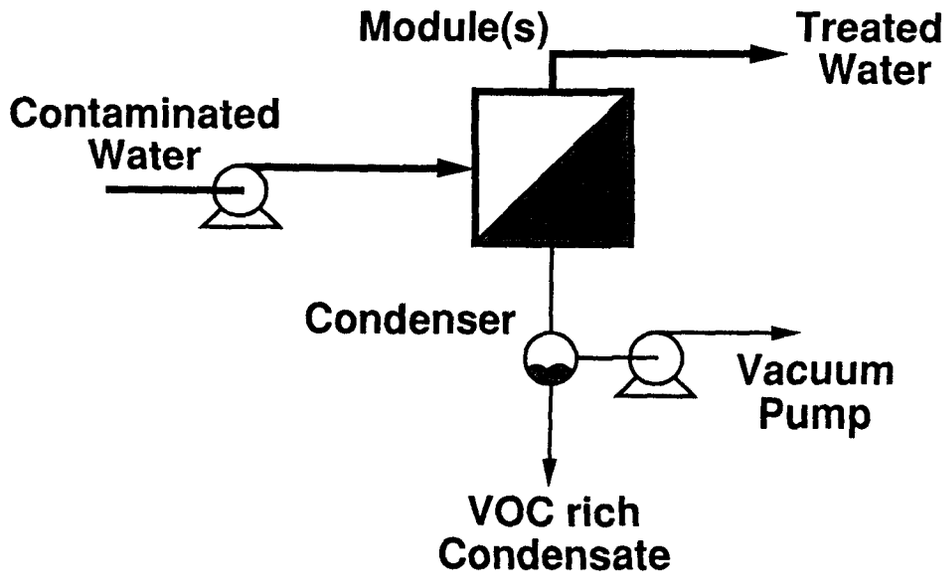

Figure 1. Pervaporation process.

WASTE APPLICABILITY:

Pervaporation is applicable to aqueous waste streams (ground water, lagoons, leachate, and rinse water) contaminated with VOCs, such as solvents, degreasers, and gasoline. The technology is applicable to the types of wastes currently treated by carbon adsorption, air stripping, and reverse osmosis separation.

STATUS:

Work is currently progressing on in-house characterization of several wastewaters. The final pervaporation design is anticipated for January 1991.

FOR FURTHER INFORMATION:

EPA Project Manager:
John F. Martin
U.S. EPA
Risk Reduction Engineering Laboratory
26 West Martin Luther King Drive
Cincinnati, Ohio 45268
513-569-7758
FTS 684-7758

Technology Developer Contact:
Abbas Zaidi
Wastewater Technology Centre
867 Lakeshore Road, Box 5050
Burlington, Ontario L7R 4A6
Canada
416-336-4605

WESTERN RESEARCH INSTITUTE
(Contained Recovery of Oily Wastes)

TECHNOLOGY DESCRIPTION:

The Contained Recovery of Oily Wastes (CROW) process recovers oily wastes from the ground by adapting technology presently used for secondary petroleum recovery and for primary production of heavy oil and tar sand bitumen. Steam and hot water displacement are used to move accumulated oily wastes and water aboveground for treatment.

Injection and production wells are first installed in soil contaminated with oily wastes (Figure 1). Low-quality steam is then injected below the deepest penetration of organic liquids. The steam condenses, causing rising hot water to dislodge and sweep buoyant organic liquids upward into the more permeable soil regions. Hot water is injected above the impermeable soil regions to heat and mobilize the oil waste accumulations, which are recovered by hot-water displacement.

When the oily wastes are displaced, the organic liquid saturations in the subsurface pore space increase, forming an oil bank. The hot water injection displaces the oil bank to the production well. Behind the oil bank, the oil saturation is reduced to an immobile residual saturation in the subsurface pore space. The oil and water produced is treated for reuse or discharge.

In-situ biological treatment follows the displacement and continues until ground-water contaminants are no longer detected in any water samples from the site. During treatment, all mobilized organic liquids and water-soluble contaminants are contained within the original boundaries of oily waste accumulations. Hazardous materials are contained laterally by ground-water isolation and vertically by organic liquid flotation. Excess water is treated in compliance with discharge regulations.

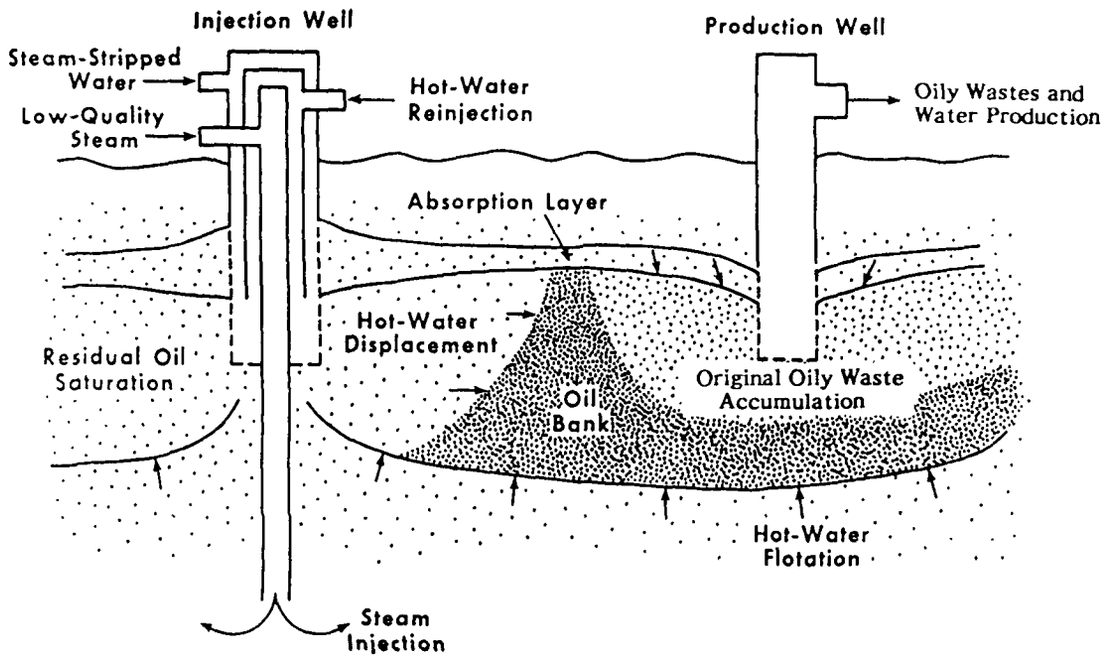

Figure 1. CROW process schematic.

The process removes large portions of oily waste accumulations; stops the downward migration of organic contaminants; immobilizes any residual saturation of oily wastes; and reduces the volume, mobility and toxicity of oily wastes. It can be used for shallow and deep contaminated areas, and uses the same mobile equipment required by conventional petroleum production technology.

WASTE APPLICABILITY:

This technology could be applied to manufactured gas plant sites, woodtreating sites and other sites with soils containing organic liquids, such as coal tars, pentachlorophenol solutions, creosote, and petroleum byproducts.

STATUS:

This technology was tested at the laboratory and pilot-scale. The tests are expected to closely resemble previous laboratory tests in tar sand bitumen recovery using steamflood technology. A number of hot water leaching tests have been completed.

A final draft report was prepared and is currently undergoing EPA review.

This technology is invited to participate in the SITE Demonstration Program.

FOR FURTHER INFORMATION:

EPA Project Manager:
Eugene F. Harris
U.S. EPA
Risk Reduction Engineering Laboratory
26 West Martin Luther King Drive
Cincinnati, Ohio 45268
513-569-7862
FTS: 684-7862

Technology Developer Contact:
James Speight
P.O. Box 3395
University Station
Laramie, Wyoming 82071
307-721-2011

☆U.S. GOVERNMENT PRINTING OFFICE: 1990 548-187/20506

INFORMATION REQUEST FORM

The EPA Risk Reduction Engineering Laboratory is responsible for testing and evaluating technologies used at Superfund site cleanups. To receive publications about these activities, indicate your area of interest by checking the appropriate box(es) below and mail the top half of this sheet to the following address:

Technical Information Manager
Risk Reduction Engineering Laboratory
U.S. Environmental Protection Agency
26 W. Martin Luther King Drive
Cincinnati, Ohio 45268

(Ma 15) ☐ Superfund
(Ma 16) ☐ Superfund Innovative Technology Evaluation (SITE) Program

Name _____
Firm _____
Address _____
City, State, Zip Code _____

The U.S. Environmental Protection Agency plans to issue two Request for Proposals during the coming year; one in January 1991 for the Demonstration Program (SITE 006), and the other in July 1991 for the Emerging Technologies Program (E05). To receive these RFPs, indicate your area of interest by checking the appropriate box(es) below and mail the bottom half of this sheet to the following address:

U.S. Environmental Protection Agency
Risk Reduction Engineering Laboratory
26 W. Martin Luther King Drive
Cincinnati, Ohio 45268
Attention: William Frietsch, III

(006) ☐ Demonstration Program RFP
(E05) ☐ Emerging Technologies Program RFP

Name _____
Firm _____
Address _____
City, State, Zip Code _____