United States
Environmental Protection
Agency

Office of Radiation Programs
(ANR-459)

EPA/520/1-89-006-1
September 1989

EPA

Risk Assessments

520189006-1

Environmental Impact Statement

NESHAPS for Radionuclides

Background Information Document — Volume 2

SM-X2

Printed on Recycled Paper

40 CFR Part 61
National Emission Standards
for Hazardous Air Pollutants

EPA 520/1-89-006-1

Risk Assessments

Environmental Impact Statement for NESHAPS Radionuclides

VOLUME 2

BACKGROUND INFORMATION DOCUMENT

September 1989
U.S. Environmental Protection Agency
Office of Radiation Programs
Washington, D.C. 20460

Preface

The Environmental Protection Agency is promulgating National Emission Standards for Hazardous Air Pollutants (NESHAPs) for Radionuclides. An Environmental Impact Statement (EIS) has been prepared in support of the rulemaking. The EIS consists of the following three volumes:

VOLUME I - Risk Assessment Methodology

This document contains chapters on hazard identification, movement of radionuclides through environmental pathways, radiation dosimetry, estimating the risk of health effects resulting from expose to low levels of ionizing radiation, and a summary of the uncertainties in calculations of dose and risks.

VOLUME II - Risk Assessments

This document contains a chapter on each radionuclide source category studied. The chapters include an introduction, category description, process description, control technology, health impact assessment, supplemental control technology, and cost. It has an appendix which contains the inputs to all the computer runs used to generate the risk assessment.

VOLUME III - Economic Assessment

This document has chapters on each radionuclide source category studied. Each chapter includes an introduction, industry profile, summary of emissions, risk levels, the benefits and costs of emission controls, and economic impact evaluations.

Copies of the EIS in whole or in part are available to all interested persons; an announcement of the availability appears in the Federal Register.

For additional information, contact James Hardin at (202) 475-9610 or write to:

Director, Criteria and Standards Division
Office of Radiation Programs (ANR-460)
Environmental Protection Agency
401 M Street, SW
Washington, DC 20460

LIST OF PREPARERS

Various staff members from EPA's Office of Radiation Programs contributed in the development and preparation of the EIS.

Terrence McLaughlin	Chief, Environmental Standards Branch	
James Hardin	Health Physicist	Project Officer
Byron Bunger	Economist	Author/Reviewer
Fran Cohen	Attorney Advisor	Reviewer
Albert Colli	Environmental Scientist	Author/Reviewer
Larry Gray	Environmental Scientist	Author/Reviewer
W. Daniel Hendricks	Environmental Scientist	Reviewer
Paul Magno	Environmental Scientist	Author/Reviewer
Christopher B. Nelson	Environmental Scientist	Author
Dr. Neal S. Nelson	Radiobiologist	Author
Barry Parks	Health Physicist	Reviewer
Dr. Jerome Pushkin	Chief Bioeffects Analysis Branch	Author/Reviewer
Jack L. Russell	Engineer	Author/Reviewer
Dr. James T. Walker	Radiation Biophysicist	Author
Larry Weinstock	Attorney Advisor	Reviewer

An EPA contractor, S. Cohen and Associates, Inc., McLean, VA, provided significant technical support in the preparation of the EIS.

TABLE OF CONTENTS

VOLUME II: RISK ASSESSMENT

LIST OF TABLES ix

LIST OF FIGURES. xxxiii

1. INTRODUCTION 1-1

2. DEPARTMENT OF ENERGY (DOE) FACILITIES. 2-1
   2.1 OVERVIEW AND SUMMARY OF RESULTS. 2-1
   2.2 RMI COMPANY. 2-21
   2.3 LOS ALAMOS NATIONAL LABORATORY 2-24
   2.4 HANFORD RESERVATION. 2-33
   2.5 OAK RIDGE RESERVATION. 2-42
   2.6 SAVANNAH RIVER PLANT 2-51
   2.7 FEED MATERIALS PRODUCTION CENTER 2-58
   2.8 BROOKHAVEN NATIONAL LABORATORY 2-66
   2.9 MOUND FACILITY 2-71
   2.10 IDAHO NATIONAL ENGINEERING LABORATORY 2-72
   2.11 LAWRENCE BERKELEY LABORATORY 2-79
   2.12 PADUCAH GASEOUS DIFFUSION PLANT. 2-82
   2.13 LAWRENCE LIVERMORE LABORATORY 2-84
   2.14 PORTSMOUTH GASEOUS DIFFUSION PLANT. 2-86
   2.15 ARGONNE NATIONAL LABORATORY. 2-89
   2.16 PINELLAS PLANT 2-92
   2.17 NEVADA TEST SITE 2-94
   2.18 KNOLLS LABORATORY - KESSELRING 2-96
   2.19 BATTELLE COLUMBUS LABORATORY 2-98
   2.20 FERMI NATIONAL LABORATORY. 2-100
   2.21 SANDIA NATIONAL LABORATORY 2-103
   2.22 BETTIS ATOMIC POWER LABORATORY 2-106
   2.23 KNOLLS LAB - WINDSOR 2-108
   2.24 ROCKY FLATS PLANT 2-109
   2.25 PANTEX PLANT 2-112
   2.26 KNOLLS LAB - KNOLLS. 2-114
   2.27 AMES LABORATORY. 2-117
   2.28 ROCKETDYNE ROCKWELL. 2-118
   2.29 REFERENCES 2-122

3. NRC-LICENSED AND NON-DOE FEDERAL FACILITIES. 3-1
   3.1 INTRODUCTION AND BACKGROUND 3-1
   3.2 HOSPITALS 3-2
   3.3 RADIOPHARMACEUTICAL MANUFACTURERS 3-6
   3.4 LABORATORIES. 3-10
   3.5 RESEARCH AND TEST REACTORS. 3-13
   3.6 SEALED SOURCE MANUFACTURERS 3-16
   3.7 NON-LWR FUEL FABRICATORS. 3-20
   3.8 SOURCE MATERIAL LICENSEES 3-23
   3.9 LOW-LEVEL WASTE INCINERATORS. 3-25
   3.10 NON-DOE FEDERAL FACILITIES. 3-28

3.11 SUMMARY OF THE COLLECTIVE RISKS FROM ALL FACILITIES 3-30
3.12 REFERENCES. 3-32

4. URANIUM FUEL CYCLE FACILITIES. 4-1
4.1 INTRODUCTION 4-1
4.2 URANIUM MILLS 4-3
4.3 URANIUM CONVERSION FACILITIES 4-25
4.4 FUEL FABRICATION FACILITIES 4-31
4.5 NUCLEAR POWER FACILITIES. 4-40
4.6 SUMMARY 4-67
4.7 REFERENCES. 4-69

5. HIGH-LEVEL WASTE DISPOSAL FACILITIES 5-1
5.1 DESCRIPTION OF THE HIGH-LEVEL WASTE DISPOSAL FACILITIES. 5-1
5.2 BASIS OF THE EXPOSURE AND RISK EVALUATION 5-4
5.3 RESULTS OF THE DOSE AND RISK ASSESSMENT 5-7
5.4 SUPPLEMENTARY CONTROL OPTIONS AND COSTS 5-9
5.5 REFERENCES. 5-11

6. ELEMENTAL PHOSPHORUS PLANTS. 6-1
6.1 DESCRIPTION OF THE SOURCE CATEGORY. 6-1
6.2 BASIS OF THE EXPOSURE AND RISK ASSESSMENT 6-3
6.3 RESULTS OF THE EXPOSURE AND RISK ASSESSMENT 6-13
6.4 SUPPLEMENTARY CONTROL OPTIONS AND COSTS 6-18
6.5 REFERENCES. 6-23

7. COAL-FIRED UTILITY AND INDUSTRIAL BOILERS. 7-1
7.1 INTRODUCTION. 7-1
7.2 UTILITY BOILERS 7-5
7.3 INDUSTRIAL BOILERS. 7-19
7.4 REFERENCES. 7-25

8. INACTIVE URANIUM MILL TAILINGS 8-1
8.1 DESCRIPTION OF INACTIVE URANIUM MILL TAILINGS SITES 8-1
8.2 BASIS OF THE EXPOSURE AND RISK ASSESSMENT 8-3
8.3 RESULTS OF THE RISK ASSESSMENT FOR INACTIVE MILLS . .8-5
8.4 SUPPLEMENTARY CONTROL OPTIONS AND COSTS 8-17
8.5 REFERENCES. 8-30

9. LICENSED URANIUM MILL TAILINGS FACILITIES. 9-1
9.1 DESCRIPTION OF LICENSED URANIUM MILL TAILINGS 9-1
9.2 BASIS OF THE EXPOSURE AND RISK ASSESSMENT 9-5
9.3 RESULTS OF THE RISK ASSESSMENTS FOR LICENSED MILLS. 9-12
9.4 SUPPEMENTARY CONTROL OPTIONS AND COSTS. 9-26
9.5 REFERENCES. 9-52

10. DEPARTMENT OF ENERGY RADON SITES 10-1
10.1 SITE DESCRIPTIONS. 10-1
10.2 BASIS OF THE RISK ASSESSMENT 10-9
10.3 RESULTS OF THE RISK ASSESSMENT 10-11
10.4 SUPPLEMENTARY CONTROL OPTIONS AND COST 10-20
10.5 REFERENCES 10-23

11. UNDERGROUND URANIUM MINES. 11-1
11.1 GENERAL DESCRIPTION. 11-1
11.2 BASIS OF THE EXPOSURE AND RISK ASSESSMENT. 11-5
11.3 RESULTS OF THE EXPOSURE AND RISK ASSESSMENT. . . .11-10
11.4 SUPPLEMENTARY CONTROL OPTIONS AND COSTS. 11-14
11.5 REFERENCES 11-30

12. SURFACE URANIUM MINES. 12-1
12.1 GENERAL DESCRIPTION. 12-1
12.2 BASIS OF THE DOSE AND RISK ASSESSMENT. 12-12
12.3 RESULTS OF THE DOSE AND RISK ASSESSMENT. 12-12
12.4 SUPPLEMENTARY CONTROL OPTIONS AND COSTS. 12-19
12.5 REFERENCES 12-21

13. PHOSPHOGYPSUM STACKS 13-1
13.1 SOURCE CATEGORY DESCRIPTION. 13-1
13.2 RADIONUCLIDE EMISSIONS 13-8
13.3 RESULTS OF THE HEALTH IMPACT ASSESSMENT. 13-21
13.4 SUPPLEMENTARY CONTROL OPTIONS AND COSTS. 13-27
13.5 REFERENCES 13-39

LIST OF TABLES

VOLUME II: RISK ASSESSMENT

Table 2.1-1. Department of energy facilities. 2-2

Table 2.1-2. Summary of doses and risks to nearby individuals from DOE facilities due to 1986 emissions. 2-3

Table 2.1-3. Distribution of fatal cancer risk in the population. 2-7

Table 2.1-4. Summary of doses and risks to the regional population (0-80 km) around DOE facilities . . .2-8

Table 2.1-5. Baseline risk assessment for DOE facilities. . 2-14

Table 2.1-6. Risks when emissions are limited to 3 mrem/y EDE. 2-14

Table 2.1-7 Risks when emissions are limited to 1 mrem/y EDE. 2-15

Table 2.1-8 Maximum individual risk, with Alternative 4 supplemental control strategies. 2-16

Table 2.1-9 Fatal cancers/year to nearby individuals with Alternative 4 supplemental control techniques 2-19

Table 2.1-10 Distribution of fatal cancer risk in the populations within 80 km with Alternative 4 supplemental control techniques. 2-21

Table 2.2-1. Radionuclides released to air during 1986 from RMI. 2-22

Table 2.2-2. Estimated radiation dose rates from RMI. . . . 2-23

Table 2.2-4. Estimated distribution of the fatal cancer risk to the regional (0-80 km) population from RMI. 2-23

Table 2.3-1. Radionuclides released to air during 1986 from Los Alamos Scientific Laboratory . . 2-28

Table 2.3-2. Estimated radiation doses from the Los Alamos Laboratory. 2-29

Table 2.3-3. Estimated fatal cancer risks from the Los Alamos Laboratory. 2-29

Table 2.3-4. Estimated distribution of the fatal cancer risk to the regional (0-80 km) gopulation from the Los Alamos Scientific Laboratory 2-29

Table 2.3-5. Effects of holdup time on the release of air activation products from the proposed stack serving the LAMPF beam stop 2-30

Table 2.4-1. Radionuclides released to air during 1986 from the Hanford Reservation 2-40

Table 2.4-2. Estimated radiation dose rates from the Hanford Reservation. 2-41

Table 2.4-3. Estimated fatal cancer risks from the Hanford Reservation. 2-41

Table 2.4-4. Estimated distribution of the fatal cancer risk to the regional (0-80 km) population from the Hanford Reservation. . . . 2-41

Table 2.5-1. Radionuclides released to air from Oak Ridge Reservation during 1986. 2-44

Table 2.5-2. Estimated radiation dose rates from the Oak Ridge National Laboratory. 2-45

Table 2.5-3. Estimated fatal cancer risks from the Oak Ridge National Laboratory. 2-45

Table 2.5-4. Estimated distribution of the fatal cancer risk to the regional (0-80 km) population from Oak Ridge National Laboratory 2-45

Table 2.5-5. Anticipated new emission rate for tritium at CRGDF 2-46

Table 2.5-6. Summary of capital and operating costs for supplementary controls at the Oak Ridge Reservation. 2-50

Table 2.6-1. Radionuclides released to air during 1986 from Savannah River Plant. 2-54

Table 2.6-2. Estimated radiation dose rates from the Savannah River Plant 2-55

Table 2.6-3. Estimated fatal cancer risks from the Savannah River Plant 2-55

Table 2.6-4. Estimated distribution of the fatal cancer risk to the regional (0-80 km) population from the Savannah River Plant . . . 2-56

Table 2.7-1. Radionuclides released to air during 1986 from FMPC 2-59

Table 2.7-2. Estimated radiation dose rates from FMPC . . . 2-60

Table 2.7-3. Estimated fatal cancer risks from FMPC 2-60

Table 2.7-4. Estimated distribution of the fatal cancer risk to the regional (0-80 km) population from FMPC 2-61

Table 2.7-6. Cost estimates for acquisition and installation of HEPA filter systems. 2-64

Table 2.8-1. Radionuclide emission points stacks at Brookhaven National Laboratory 2-67

Table 2.8-2. Radionuclides released to air during 1986 from Brookhaven National Laboratory. 2-69

Table 2.8-3. Estimated radiation dose rates from the Brookhaven National Laboratory 2-70

Table 2.8-4. Estimated fatal cancer risks from the Brookhaven National Laboratory 2-70

Table 2.8-5. Estimated distribution of the fatal cancer risk to the regional (0-80 km) population from the Brookhaven National Laboratories 2-71

Table 2.9-1. Radionuclides released to air during 1986 from Mound Facility. 2-72

Table 2.9-2. Estimated radiation dose rates from the Mound Facility 2-73

Table 2.9-3. Estimated fatal cancer risks from the Mount Facility 2-73

Table 2.9-4. Estimated distribution of the fatal cancer risk to the regional (0-80 km) population from the Mound Facility 2-73

Table 2.10-1. Radionuclides released to air during 1986 from all Idaho Facilities. 2-78

Table 2.10-2. Estimated radiation dose rates from the Idaho National Engineering Laboratory. 2-79

Table 2.10-3. Estimated ratal cancer risks from the Idaho National Engineering Laboratory. 2-79

Table 2.10-4. Estimated distribution of the fatal cancer risk to the regional (0-80 km) population from INEL facilities. 2-79

Table 2.11-1. Radionuclides released to air during 1986 from Lawrence Berkeley Laboratory. 2-81

Table 2.11-2. Estimated radiation dose rates from the Lawrence Berkeley Laboratory 2-82

Table 2.11-3. Estimated fatal cancer risks from the Lawrence Berkeley Laboratory 2-82

Table 2.11-4. Estimated distribution of the fatal cancer risk to the regional (0-80 km) population from the Lawrence Berkeley Laboratory 2-82

Table 2.12-1. Radionuclides released to air during 1986 from Paducah Gaseous Diffusion Plant 2-83

Table 2.12-2. Estimated radiation dose rates from the Paducah Gaseous Diffusion Plant. 2-84

Table 2.12-3. Estimated fatal cancer risks from the Pacucah Gaseous Diffusion Plant. 2-84

Table 2.12-4. Estimated distribution of the fatal cancer risk to the regional (0-80 km) population from the Paducah Gaseous Diffusion Plant. 2-84

Table 2.13-1. Source terms and release point characterization 2-85

Table 2.13-2. Estimated radiation dose rates from Lawrence Livermore Laboratory/Sandia Livermore. 2-86

Table 2.13-3. Estimated fatal cancer risks from Lawrence Livermore Laboratory/Sandia Livermore. 2-86

Table 2.13-4. Estimated distribution of the fatal cancer risk to the regional (0-80 km) population from Lawrence Livermore Laboratory/Sandia Livermore. 2-86

Table 2.14-1. Radionuclides released to air during 1986 from the Portsmouth Gaseous Diffusion Plant. 2-88

Table 2.14-2. Estimated radiation dose rates from the Portsmouth Gaseous Diffusion Plant 2-89

Table 2.14-3 Estimated fatal cancer risks from the Portsmouth Diffusion Plant 2-89

Table 2.14-4. Estimated distribution of the fatal cancer risk to the regional (0-80 km) population from the Portsmouth Gaseous Diffusion Plant. 2-89

Table 2.15-1. Radionuclides released to air during 1986 from Argonne National Laboratory 2-90

Table 2.15-2. Estimated radiation dose rates from the Argonne National Laboratory. 2-91

Table 2.15-3. Estimated fatal cancer risks from the Argonne National Laboratory. 2-91

Table 2.15-4. Estimated distribution of the fatal cancer risk to the regional (0-80 km) population from the Argonne National Laboratory 2-92

Table 2.16-1. Radionuclides released to air during 1986 from Pinellas Plant. 2-92

Table 2.16-2. Estimated radiation dose rates from the Pinellas Plant 2-93

Table 2.16-3. Estimated fatal cancer risks from the Pinellas Plant 2-93

Table 2.16-4. Estimated distribution of the fatal cancer risk to the regional (0-80 km) population from the Pinellas Plant 2-94

Table 2.17-1. Radionuclides released to air during 1986 from the Nevada Test Site. 2-95

Table 2.17-2. Estimateed radiation dose rates from the Nevada Test Site 2-95

Table 2.17-3. Estimated fatal cancer risks from the Nevada Test Site 2-96

Table 2.17-4. Estimated distribution of the fatal cancer risk to the regional (0-80 km) population from the Nevada Test Site 2-96

Table 2.18-1. Radionuclides released to air during 1986 from Knolls Atomic Power Lab-Kesselring. . . . 2-97

Table 2.18-2. Estimated radiation dose rates from the Knolls Lab-Kesselring. 2-98

Table 2.18-3. Estimated fatal cancer risks from the Knolls Lab-Kesselring. 2-98

Table 2.18-4. Estimated distribution of the fatal cancer risk to the regional (0-80 km) population from Knolls Atomic Power Lab-Kesselring 2-98

Table 2.19-1. Radionuclides released to air during 1986 from Battelle Columbus 2-100

Table 2.19-2. Estimated radiation dose rates from the Battelle Columbus Laboratory 2-101

Table 2.19-3. Estimated fatal cancer risks from the Battelle Columbus Laboratory 2-101

Table 2.19-4. Estimated distribution of the fatal cancer risk to the regional (0-80 km) population from Battelle Columbus. 2-101

Table 2.20-1. Radionuclides released to air during 1986 from Fermi National Accelerator Laboratory 2-102

Table 2.20-2. Estimated radiation dose rates from the Fermi National Laboratory. 2-103

Table 2.20-3. Estimated fatal cancer risks from the Fermi National Laboratory. 2-103

Table 2.20-4. Estimated distribution of the fatal cancer risk to the regional (0-80 km) population from the Fermi National Laboratory 2-103

Table 2.21-1. Radionuclides released to air during 1986 from Sandia National Laboratory/Lovelace Research Institute 2-104

Table 2.21-2. Estimated radiation dose rates from the Sandia National Laboratory/Lovelace Research Institute. 2-105

Table 2.21-3. Estimated fatal cancer risks from the Sandia National Laboratory/Lovelace Research Institute. 2-105

Table 2.21-4. Estimated distribution of the fatal cancer risk to the regional (0-80 km) population from the Sandia National Laboratory/Lovelace Research Institute 2-105

Table 2.22-1. Radionuclides released to air during 1986 from Bettis Atomic Power Laboratory. 2-106

Table 2.22-2. Estimated radiation dose rates from the Bettis Atomic Power Laboratory 2-107

Table 2.22-3. Estimated fatal cancer risks from the Bettis Atomic Power Laboratory 2-107

Table 2.22-4. Estimated distribution of the fatal cancer risk to the regional (0-80 km) population from the Bettis Atomic Power Laboratory 2-107

Table 2.23-1. Radionuclides released to air during 1986 from Knolls Atomic Power Lab-Windsor 2-108

Table 2.23-2. Estimated radiation dose rates from the Knolls Lab-Windsor 2-109

Table 2.23-3. Estimated fatal cancer risks from the Knolls Lab-Windsor 2-109

Table 2.23-4. Estimated distribution of the fatal cancer risk to the regional (0-80 km) population from the Knolls Atomic Power Lab-Windsor. 2-110

Table 2.24-1. Radionuclides released to air during 1986 from Rocky Flats Plant 2-111

Table 2.24-2. Estimated radiation dose rates from the Rocky Flats Plant. 2-112

Table 2.24-3. Estimated fatal cancer risks from the Rocky Flats Plant. 2-112

Table 2.24-4. Estimated distribution of the fatal cancer risk to the regional (0-80 km) population from the Rocky Flats Plant. 2-112

Table 2.25-1. Radionuclides released to air during 1986 from the Pantex Plant. 2-113

Table 2.25-2. Estimated radiation dose rates from the Pantex Plant 2-114

Table 2.25-3. Estimated fatal cancer risks from the Pantex Plant 2-114

Table 2.25-4. Estimated distribution of the fatal cancer risk to the regional (0-80 km) population from the Pantex Plant 2-114

Table 2.26-1. Radionuclides released to air during 1986 from Knolls Atomic Power Lab-Knolls. 2-115

Table 2.26-2. Estimated radiation dose rates from the Knolls Lab-Knolls. 2-116

Table 2.26-3. Estimated fatal cancer risks from the Knolls Lab-Knolls. 2-116

Table 2.26-4. Estimated distribution of the fatal cancer risk to the regional (0-80 km) population from the Knolls Atomic Power Lab-Knolls 2-116

Table 2.27-1. Radionuclides released to air during 1986 from Ames Laboratory 2-117

Table 2.27-2. Estimated radiation dose rates from the Ames Laboratory. 2-118

Table 2.27-3. Estimated fatal cancer risks from the Ames Laboratory 2-118

Table 2.27-4. Estimated distribution of the fatal cancer risk to the regional (0-80 km) population from the Ames Laboratory. 2-118

Table 2.28-1. Radionuclides released to air during 1986 from Rocketdyne Division, Rockwell International. 2-119

Table 2.28-2. Estimated radiation dose rates from Rocketdyne Division, Rockwell International. 2-120

Table 2.28-3. Estimated fatal cancer risks from Rocketdyne Division, Rockwell International. 2-120

Table 2.28-4. Estimated distribution of the fatal cancer risk to the regional (0-80 km) population from Rocketdyne Division, Rockwell International 2-121

Table 3-1. Estimated emissions from model hospitals. 3-3

Table 3-2. Estimated radiation dose rates from model hospitals. 3-5

Table 3-3. Estimated fatal cancer risks from model hospitals. 3-5

Table 3-4. Estimated distribution of the fatal cancer risk to the regional (0-80 km) populations from all hospitals. 3-5

Table 3-5. Effluent release rates (Ci/y) for radiopharmaceutical manufacturers. 3-7

Table 3-6. Estimated radiation dose rates from radiopharmaceutical manufacturers. 3-8

Table 3-7. Estimated fatal cancer risks from reference radiopharmaceutical manufacturers. 3-8

Table 3-8. Estimated distribution of the fatal cancer risk to the regional (0-80 km) populations from all radiopharmaceutical manufacturers. 3-9

Table 3-9. Effluent release rates (Ci/y) for laboratories . 3-11

Table 3-10. Estimated radiation dose rates from laboratories 3-12

Table 3-11. Estimated fatal cancer risks from laboratories . 3-12

Table 3-12. Estimated distribution of the fatal cancer risk to the regional (0-80 km) populations from all laboratories 3-13

Table 3-13. Effluent release rates (Ci/y) for research reactors 3-14

Table 3-14. Estimated radiation dose rates from research reactors 3-15

Table 3-15. Estimated fatal cancer risks from research reactors 3-15

Table 3-16. Estimated distribution of the fatal cancer risk to the regional (0-80 km) populations from research and test reactors. 3-16

Table 3-17. Effluent release rates (Ci/y) for sealed source manufacturers 3-17

Table 3-18. Estimated radiation dose rates from sealed source manufacturers 3-18

Table 3-19. Estimated fatal cancer risks from sealed source manufacturers 3-19

Table 3-20. Estimated distribution of the fatal cancer risk to the regional (0-80 km) populations from sealed source manufacturers 3-19

Table 3-21. Effluent release rates (Ci/y) for non-LWR fuel fabricators. 3-21

Table 3-22. Estimated radiation dose rates from non-LWR fuel fabricators 3-22

Table 3-23. Estimated fatal cancer risks from non-LWR fuel fabricators. 3-22

Table 3-24. Estimated distribution of the fatal cancer risk to the regional (0-80 km) populations from all non-LWR fuel fabricators. 3-22

Table 3-25. Effluent release rates for source material licensees. 3-23

Table 3-26. Estimated radiation dose rates from source material licensees 3-24

Table 3-27. Estimated fatal cancer risks from source material licensees 3-24

Table 3-28. Estimated distribution of the fatal cancer risk to the regional (0-80 km) populations from all source material licensees 3-25

Table 3-29. Effluent release rates (Ci/y) for low-level waste disposal facilities. 3-26

Table 3-30. Estimated radiation dose rates from low-level waste disposal facilities. 3-27

Table 3-31. Estimated fatal cancer risks from low-level waste disposal facilities. 3-27

Table 3-32. Estimated distribution of the fatal cancer risk to the regional (0-80 km) populations from all low-level waste disposal facilities . . 3-27

Table 3-33. Effluent release rates (Ci/y) for DOD facilities 3-29

Table 3-34. Estimated radiation dose rates from DOD facilities 3-29

Table 3-35. Estimated fatal cancer risks from DOD facilities 3-30

Table 3-36. Estimated distribution of the fatal cancer risk to the regional (0-80 km) populations from all DOD facilities. 3-30

Table 3-37. Estimated distribution of the fatal cancer risk to the regional (0-80 km) populations from all NRC-licensed facilities 3-31

Table 4-1. Uranium mills licensed by the U.S. Nuclear Regulatory Commission as of December 1988. 4-4

Table 4-2. Source terms for uranium milling 4-10

Table 4-3. Areas of the tailings impoundments at uranium mills and average radium-226 concentrations. . . 4-14

Table 4-4. Sources of meteorological data used in the assessment of uranium milling. 4-15

Table 4-5. Estimated populations living within 0 to 5 km of active uranium milling facilities 4-16

Table 4-6. Estimated radiation dose rates from uranium mills. 4-17

Table 4-7. Estimated fatal cancer risks from uranium mills. 4-19

Table 4-8. Estimated distribution of the fatal cancer risk to the regional (0-80 km) populations from uranium mills 4-19

Table 4-9. Effluent controls for process emissions. 4-20

Table 4-11. Reported atmospheric radioactive emissions for uranium conversion facilities (Ci/y) 4-27

Table 4-12. Atmospheric radioactive emissions assumed for reference dry and wet process uranium conversion facilities. 4-29

Table 4-13. Radiation dose equivalent rates from atmospheric radioactive emissions from reference uranium conversion facilities. 4-29

Table 4-14. Fatal cancer risks due to atmospheric radioactive emissions from reference uranium conversion facilities. 4-30

Table 4-15. Estimated distribution of lifetime fatal cancer risks projected for uranium conversion facilities 4-31

Table 4-16. Light water reactor commercial fuel fabrication facilities licensed by the Nuclear Regulatory Commission as of June 1987. 4-33

Table 4-17. Light water reactor commercial fuel fabrication facilities reported annual uranium effluent releases for 1983 through 1987 in uCi/y. 4-35

Table 4-18. Atmospheric radioactive emissions assumptions for reference fuel fabrication facility. 4-37

Table 4-19. Radiation dose equivalent rates from atmospheric radioactive emissions from model fuel fabrication facility. 4-39

Table 4-20. Fatal cancer risks due to atmospheric radioactive emissions from reference fuel fabrication facility 4-39

Table 4-21. Estimated distribution of lifetime fatal cancer risks projected for all fuel fabrication facilities 4-40

Table 4-22. U.S. nuclear power generating units operable as of December 31, 1986 (DOE87). 4-41

Table 4-23. Geometric mean and standard deviation by year for selected radionuclides for boiling water reactors in the United States for 1981 through 1985 in uCi/y. 4-49

Table 4-24. Geometric mean and standard deviation by year for selected radionuclides for pressurized water reactors in the United States for 1981 through 1985 in uCi/y. 4-51

Table 4-25. Atmospheric radioactive emissions assumed for model boiling water reactor. 4-53

Table 4-26. Atmospheric radioactive emissions assumed for model pressurized water reactor. 4-54

Table 4-27. Minimum, maximum, median, and 90th percentile population densities for nuclear power reactor sites in the United States 4-55

Table 4-28. Dose rates from model light water reactors . . . 4-56

Table 4-29. Fatal cancer risks for model light water reactors 4-56

Table 4-30. Estimated distribution of lifetime fatal cancer risks projected for all power reactors. . 4-58

Table 4-31. Doses to maximally exposed individuals in mrem/y. 4-59

Table 4-32. Summary of fatal cancer risks from atmospheric radioactive emissions from uranium fuel cycle facilities 4-67

Table 4-33. Estimated distribution of lifetime fatal cancer risks for uranium fuel cycle facilities. 4-68

Table 5-1. Projected generation of spent fuel 5-2

Table 5-2. Emissions from normal operations at HLW disposal facilities 5-5

Table 5-3. WIPP discharge stacks. 5-7

Table 5-4. Estimated radiation dose rates from high-level waste disposal facilities. 5-8

Table 5-5. Estimated fatal cancer risks from high-level waste disposal facilities. 5-8

Table 5-6. Estimated distribution of the fatal cancer risk to the regional (0-80 km) populations from high-level waste disposal facilities. . . . 5-10

Table 6-1. Elemental phosphorus plants. 6-2

Table 6-2. Radionuclide stack emissions measured at elemental phosphorus plants (1975-1980). 6-4

Table 6-3. Measured radionuclide concentrations in process samples at elemental phosphorus plants - 1983-1984 results 6-6

Table 6-4. Radionuclide emissions from calciners at elemental phosphorus plants - 1983-1984 results. 6-6

Table 6-5. Measured distribution of lead-210 and polonium-210 by particle size in calciner stack outlet streams at elemental phosphorus plants - 1983 results. 6-7

Table 6-6. Dissolution of lead-210 and polonium-210 from particulate samples collected from off-gas streams at FMC and Stauffer elemental phosphorus plants. 6-7

Table 6-7. Lead-210 and polonium-210 emissions measured in calciner off-gas streams at two elemental phosphorus plants - 1988 6-9

Table 6-8. Measured distribution of lead-210 and polonium-210 by particle size in calciner stack inlet and outlet streams at elemental phosphorus plants - 1988 results 6-9

Table 6-9. Estimated annual radionuclide emissions from elemental phosphorus plants. 6-10

Table 6-10. Lung clearance classification and particle sizes used in the assessment 6-12

Table 6-11. Calciner stack emission characteristics. 6-12

Table 6-12. Populations within 80 km and distances to the maximum exposed individuals of elemental phosphorus plants with the source of meteorological data used in dose equivalent and risk calculations 6-13

Table 6-13. Estimated radiation dose equivalent rates to the maximum exposed individual and to the 80-km regional population from elemental phosphorus plants. 6-15

Table 6-14. Estimated fatal cancer risks to the maximum exposed individual and to the 80-km regional population from elemental phosphorus plants. . . . 6-17

Table 6-15. Estimated distribution of the fatal cancer risk to the regional (0-80 km) populations from operating elemental phosphorus plants . . . 6-18

Table 6-16. Estimated distribution of the fatal cancer risk to the regional (0-80 km) populations from idle elemental phosphorus plants. 6-18

Table 6-17. Estimated Po-210 emission levels achieved by control alternatives. 6-19

Table 6-18. Estimated Pb-210 emission levels achieved by control alternatives. 6-20

Table 6-19. Capital cost of control alternatives (1,000 1988 $) 6-21

Table 6-20. Annualized cost of control alternatives (1,000 1988 $) 6-22

Table 7-1. Major decay products of uranium-238. 7-3

Table 7-2. Major decay products of thorium-232. 7-3

Table 7-3. Typical uranium and thorium concentrations in coal. 7-4

Table 7-4. Uranium concentrations and distributions in coal. 7-5

Table 7-5. Coal ash distribution by boiler type 7-7

Table 7-6. Distribution of particulate control equipment for bituminous coal-fired utility boilers. 7-9

Table 7-7. U-238 emission factors for coal-fired utility boilers. 7-11

Table 7-8. Th-232 emission factors for coal-fired utility boilers. 7-12

Table 7-9. Enrichment factors for radionuclides 7-12

Table 7-10. Emissions for typical coal-fired utility boilers. 7-13

Table 7-11. Emissions for large coal-fired utility boilers . 7-14

Table 7-12. Estimated radiation dose rates from typical coal-fired utility boilers. 7-15

Table 7-13. Estimated radiation dose rates from large coal-fired utility boilers. 7-16

Table 7-14. Estimated fatal cancer risk from typical coal-fired utility boilers. 7-17

Table 7-15. Estimated fatal cancer risk from large coal-fired utility boilers. 7-17

Table 7-16. Estimated distribution of the fatal cancer risk to the regional (0-80 km) populations from all coal-fired utility boilers 7-18

Table 7-17. Numbers and capacities of industrial boilers . . 7-20

Table 7-18. Estimated radiation dose rates from the reference coal-fired industrial boiler 7-23

Table 7-19. Estimated distribution of the fatal cancer risk to the regional (0-80 km) populations from all coal-fired industrial boilers. 7-23

Table 8-1. Quantity of tailings and planned remedial actions at inactive uranium mill tailings sites. 8-4

Table 8-2. Summary of radon-222 emissions from inactive uranium mill tailings disposal sites 8-6

Table 8-3. Estimated number of persons living within 5 km of the centroid of tailings disposal sites for inactive mills 8-7

Table 8-4. Estimated exposures and risks to individuals living near inactive tailings sites after UMTRCA disposal is completed. 8-8

Table 8-5. Estimated fatal cancers per year in the regional (0-80 km) populations around inactive tailings disposal sites 8-10

Table 8-6. Estimated distribution of the fatal cancer risk to the regional (0-80 km) populations from inactive uranium mill tailings disposal sites. . 8-11

Table 8-7. Estimated exposures and risks to individuals living near inactive tailings sites assuming a 6 $pCi/m^2/s$ radon flux limit. 8-12

Table 8-8. Estimated fatal cancers per year in the regional (0-80 km) populations around inactive tailings disposal sites assuming a 6 $pCi/m^2/s$ radon flux limit 8-13

Table 8-9. Estimated distribution of the fatal cancer risk to the regional (0-80 km) populations from inactive uranium mill tailings disposal sites assuming a 6 $pCi/m^2/s$ radon flux limit 8-14

Table 8-10. Estimated exposures and risks to individuals living near inactive tailings sites assuming a 2 $pCi/m^2/s$ radon flux limit. 8-15

Table 8-11. Estimated fatal cancers per year in the regional (0-80 km) populations around inactive tailings disposal sites assuming a 2 $pCi/m^2/s$ radon flux limit. 8-16

Table 8-12. Estimated distribution of the fatal cancer risk to the regional (0-80 km) populations from inactive uranium mill tailings disposal sites assuming a 2 $pCi/m^2/s$ radon flux limit 8-17

Table 8-13. Estimated depths of earth cover needed to achieve given radon flux rates 8-23

Table 8-14. Major volumes and surface areas used to calculate the costs to achieve given radon-222 flux rates 8-25

Table 8-15. Estimated costs of reducing average radon-222 flux rate to 20 $pCi/m^2/s$ 8-26

Table 8-16. Estimated costs of reducing average radon-222 flux rate to 6 $pCi/m^2/s$. 8-27

Table 8-17. Estimated costs of reducing average radon-222 flux rate to 2 $pCi/m^2/s$. 8-28

Table 9-1. Operating status of licensed conventional uranium mills as of June 1989. 9-3

Table 9-2. Summary of operable tailings impoundment areas and radium-226 content at operating and standby mills. 9-7

Table 9-3. Summary of radon source terms calculated for operable mill tailings impoundments. 9-9

Table 9-4. Summary of uranium mill tailings impoundment areas, flux rates, and post-UMTRCA radon-222 release rates. 9-10

Table 9-5. Estimated number of persons living within 5 km of the centroid of tailings impoundments of licensed mills. 9-11

Table 9-6. Estimated exposures and risks to individuals living near operable tailings impoundments . . . 9-13

Table 9-7. Estimated fatal cancers per year in the regional (0-80 km) populations around operable tailings impoundments. 9-15

Table 9-8. Estimated distribution of the fatal cancer risk to the regional (0-80 km) populations from operable uranium mill tailings piles. . . . 9-15

Table 9-9. Estimated exposures and risks to individuals living near licensed tailings impoundments post-UMTRCA disposal 9-17

Table 9-10. Estimated fatal cancers per year in the regional (0-80 km) populations around licensed tailings impoundments post-UMTRCA disposal 9-18

Table 9-11. Estimated distribution of the fatal cancer risk to the regional (0-80 km) populations from licensed uranium mill tailings piles post-UMTRCA disposal 9-19

Table 9-12. Estimated exposures and risks to individuals living near licensed tailings impoundments post-disposal to 6 $pCi/m^2/s$. 9-20

Table 9-13. Estimated fatal cancers per year in the regional (0-80 km) populations around licensed tailings impoundments post-disposal to 6 $pCi/m^2/s$ 9-21

Table 9-14. Estimated distribution of the fatal cancer risk to the regional (0-80 km) populations from licensed uranium mill tailings piles post-disposal to 6 $pCi/m^2/s$. 9-22

Table 9-15. Estimated exposures and risks to individuals living near licensed tailings impoundments post-disposal to 2 $pCi/m^2/s$. 9-23

Table 9-16. Estimated fatal cancers per year in the regional (0-80 km) populations around licensed tailings impoundments post-disposal to 2 $pCi/m^2/s$. 9-24

Table 9-17. Estimated distribution of the fatal cancer risk to the regional (0-80 km) populations from licensed uranium mill tailings piles post-disposal to 2 $pCi/m^2/s$. 9-25

Table 9-18. Estimated depths of earth cover needed to achieve given radon flux rates 9-27

Table 9-19. Estimated costs of reducing average radon-222 flux rate to 20 $pCi/m^2/s$ 9-30

Table 9-20. Estimated costs of reducing average radon-222 flux rate to 6 $pCi/m^2/s$. 9-31

Table 9-21. Estimated costs of reducing average radon-222 flux rate to 2 $pCi/m^2/s$. 9-32

Table 9-22. Estimated total costs for new tailings control technologies 9-36

Table 9-23. Summary of estimated radon-222 emissions for new tailings control technologies. 9-36

Table 9-24. Unit cost categories for partially below-grade impoundments 9-43

Table 9-25. Costs for a single cell partially below-grade new model tailings impoundment 9-45

Table 9-26. Costs for a phased design, partially below-grade, new model tailings impoundment. . . 9-46

Table 9-27. Costs for a continuous design, partially below-new model tailings impoundment 9-47

Table 9-28. Additional areas of operable impoundments to be controlled to achieve average radon-222 flux of 20 pCi/m^2/s. 9-51

Table 10-1. Characteristics of the four raffinate pits and activity levels of major radionuclides in the currently stored materials. . . 10-4

Table 10-2. Estimated volumes of radioactive wastes stored in Weldon Spring Quarry. 10-6

Table 10-3. Volumes of contaminated soil on the MSP storage pads. 10-7

Table 10-4. Radon source strength, areas, and radon flux rates at the MUMT. 10-11

Table 10-5. Estimated exposures and risks to individuals living near DOE radon sites assuming current radon emission rates. 10-12

Table 10-6. Estimated exposures and risks to individuals living near DOE radon sites assuming post-remediation radon emission rates 10-13

Table 10-7. Estimated fatal cancers/year to the regional (0-80 km) populations around DOE radon sites for current radon emission rates. 10-14

Table 10-8. Estimated distribution of the fatal cancer risk to the regional (0-80 km) population around the FMPC for current radon emission rates 10-15

Table 10-9. Estimated distribution of the fatal cancer risk to the regional (0-80 km) population around the NFSS for current radon emission rates 10-15

Table 10-10. Estimated distribution of the fatal cancer risk to the regional (0-80 km) population around the WSCP for current radon emission rates 10-16

Table 10-11. Estimated distribution of the fatal cancer risk to the regional (0-80 km) population around the WSQ for current radon emission rates 10-16

Table 10-12. Estimated distribution of the fatal cancer risk to the regional (0-80 km) population around the MSP for current radon emission rates 10-17

Table 10-13. Estimated distribution of the fatal cancer risk to the regional (0-80 km) population around the MUMT for current radon emission rates 10-17

Table 10-14. Estimated distribution of the fatal cancer risk to the regional (0-80 km) population around the FMPC for post-remediation radon emission rates. 10-18

Table 10-15. Estimated distribution of the fatal cancer risk to the regional (0-80 km) population around the MSP for post-remediation radon emission rates. 10-18

Table 10-16. Estimated distribution of the fatal cancer risk to the regional (0-80 km) population around the MUMT for post-remediation radon emission rates. 10-19

Table 10-17. Estimated distribution of the fatal cancer risk to the regional (0-80 km) population around all DOE radon sites for current radon emission rates. 10-19

Table 10-18. Estimated distribution of the fatal cancer risk to the regional (0-80 km) population around all DOE radon sites for post-remediation radon emission rates. 10-20

Table 10-19. Summary of capital costs to reduce radon emissions from DOE radon sites. 10-22

Table 11-1. Currently operating underground uranium mines in the United States. 11-2

Table 11-2. Estimated annual radon-222 emissions from underground uranium mining sources (EPA83b) . . 11-6

Table 11-3. Radon-222 concentrations and annual release rates in mine ventilation exhaust air 11-7

Table 11-4. Estimated exposures and risks to individuals living near underground uranium mines 11-11

Table 11-5. Estimate committed fatal cancers per year due to radon-222 emissions from underground uranium mines 11-13

Table 11-6. Estimated distribution of the fatal cancer risk caused by radon-222 emissions from all underground uranium mines 11-14

Table 11-7. Current mine ventilation exhaust vents. 11-19

Table 11-8. Estimated lifetime fatal cancer risk to the maximum exposed individual and the committed fatal cancers per year due to radon-222 emissions from underground uranium mines as a function of vent stack height 11-21

Table 11-9. Effectiveness of various stack heights. 11-24

Table 11-10. Estimated costs (dollars) to extend the heights of the ventilation exhaust stacks at each underground uranium mine. 11-26

Table 11-A-1. Weights of stack liner per vertical foot. . 11-A-3

Table 11-A-2. Weights of structural steel used. 11-A-3

Table 11-A-3. Exhaust stack costs (dollars) for individual stacks 11-A-4

Table 11-A-4. Number and size of exhaust shafts assumed for cost estimate 11-A-5

Table 12-1. Uranium ore production from surface mines, 1948-1986 12-2

Table 12-2. Breakdown by state of surface uranium mines with > 1,000 tons production. 12-3

Table 12-3. Federal laws, regulations, and guidelines for uranium mining. 12-5

Table 12-4. Estimated additional uranium resources by land status 12-6

Table 12-5. Estimated status[a] of surface uranium mine reclamation. 12-11

Table 12-6. Mines characterized in the field studies. . . .12-13

Table 12-7. Estimated radon-222 emissions from surface uranium mines 12-14

Table 12-8. Estimated particulate emissions from surface uranium mines 12-15

Table 12-9. Estimated exposures and risks to individuals living near surface uranium mines 12-17

Table 12-10. Estimated fatal cancers per year in the regional (0-80 km) populations due to radon-222 emissions from surface uranium mines 12-18

Table 12-11. Estimated distribution of the fatal cancer risk caused by radon-222 emissions from all surface uranium mines 12-19

Table 12-12. Estimated lifetime fatal cancer risks from particulate emissions 12-19

Table 12-13. Estimated depths of cover to reduce radon-222 emissions at surface uranium mines. 12-20

Table 12-14. Estimated costs to reduce radon emissions at surface uranium mines 12-20

Table 13-1. The location and characteristics of phosphogypsum stacks in the United States . . . 13-3

Table 13-2. Summary of the phosphogypsum stacks in each state. 13-4

Table 13-3. Average radionuclide concentrations in phosphogypsum, pCi/g dry weight 13-5

Table 13-4. Results of radon-222 flux measurements on phosphogypsum stacks in Florida. 13-10

Table 13-5. Radon-222 flux values applied to various regions of phosphogypsum stacks 13-11

Table 13-6. Results of radon-222 flux measurements on phosphogypsum stacks in Idaho 13-13

Table 13-7. Estimates of annual radon-222 emissions from phosphogypsum stacks 13-16

Table 13-8. Annual radionuclide emissions in fugitive dust from a model 31-ha phosphogypsum stack . .13-17

Table 13-9. Average net airborne radionuclide concentrations measured at the W.R. Grace stack 13-18

Table 13-10. The ten highest individual lifetime risks estimated to result from radon-222 emissions from phosphogypsum stacks 13-22

Table 13-11. Estimated increased risk of fatal cancer and the dose equivalent rates from maximum exposure to fugitive dusts for an individual living near phosphogypsum stacks. 13-24

Table 13-12. The 10 regional populations estimated to receive the highest collective risks from radon-222 emissions from phosphogypsum stacks. 13-24

Table 13-13. Estimated distribution of the fatal cancer risk caused by radon-222 emissions from phosphogypsum stacks. 13-25

Table 13-14. A summary of the committed fatal cancers due to radon-222 emissions from phosphogypsum stacks located in five regions in the United States 13-26

Table 13-15. Estimated number of fatal cancers from fugitive dust emissions for the population living within 80 km of the model phosphogypsum stacks. 13-27

Table 13-16. Characteristics of gypsum stacks. 13-30

Table 13-17. Mean characteristics of the stacks in each group. 13-35

Table 13-18. Radon emissions from grouped gypsum stacks. . .13-36

Table 13-19. Cost of mitigation. 13-37

Table 13-20. Risk of cancer death. 13-38

Table 13-B-1. Estimated dimensions and areas of phosphogypsum stacks. 13-B-2

Table 13-C-1. Estimated lifetime fatal cancer risks to nearby individuals caused by radon-222 emissions from phosphogypsum stacks 13-C-3

Table 13-C-2. Summary of committed fatal cancers per year within 80 km of phosphogypsum stacks. . . . 13-C-6

Table 13-D-1. Estimated distribution of lifetime fatal cancer risk caused by radon-222 emissions from seven phosphogypsum stacks in Texas. . 13-D-2

Table 13-D-2. Estimated distribution of lifetime fatal cancer risk caused by radon-222 emissions from 10 phosphogypsum stacks in the Bartow, FL, region. 13-D-2

Table 13-D-3. Estimated distribution of lifetime fatal cancer risk caused by radon-222 emissions from six phosphogypsum stacks in Illinois . 13-D-3

Table 13-D-4. Estimated distribution of lifetime fatal cancer risk caused by radon-222 emissions from seven phosphogypsum stacks in Louisiana 13-D-3

Table 13-D-5. Estimated distribution of lifetime fatal cancer risk caused by radon-222 emissions from three phosphogypsum stacks in Idaho. . 13-D-4

Table 13-E-1. Values used to scale risk 13-E-4

Table 13-E-2. Cost breakdown. 13-E-6

LIST OF FIGURES

VOLUME II: RISK ASSESSMENT

Figure 9-1. Shape and layout of the model single-cell impoundment 9-38

Figure 9-2. Size of partially above-grade model single cell impoundment. 9-39

Figure 9-3. Size of below-grade and partially above-grade cell of model phased impoundment. 9-41

Figure 9-4. Shape and layout of model phased disposal impoundment 9-42

Figure 11-1. General framing plan of a mine ventilation exhaust stack 11-25

Figure 13-1. Effect of release height on individual risk for a model stack 13-20

1. INTRODUCTION

The purpose of this report is to serve as a background information document in support of the Environmental Protection Agency's (EPA's) final rules for sources of airborne emissions of radionuclides pursuant to Section 112 of the Clean Air Act.

This report presents an analysis of the exposures and risks caused by radionuclides emitted into the air from 12 source categories. The analysis draws upon and updates previous evaluations and incorporates revisions to the estimates based on new information developed during the public comment period for the proposed rules. Specific changes from the analyses presented in the draft report are noted in the appropriate sections of the text and on the AIRDOS/DARTAB/ RADRISK input sheets in Appendix A. The report presents the Agency's most current assessment of the risks and impacts caused by these facilities. The evaluation covers the following source categories:

1. Department of Energy (DOE) Facilities;
2. Nuclear Regulatory Commission (NRC) Licensed and non-DOE Federal Facilities;
3. Uranium Fuel Cycle Facilities;
4. High-Level Waste Disposal Facilities;
5. Elemental Phosphorus Plants;
6. Coal-Fired Boilers;
7. Inactive Uranium Mill Tailings;
8. Licensed Uranium Mill Tailings;
9. DOE Radon Sites;
10. Underground Uranium Mines;
11. Surface Uranium Mines; and
12. Phosphogypsum Stacks.

For each source category, the EPA is presenting the following information:

1. A general description of the source category, including a brief description of the processes that lead to the emission of radionuclides to air and a characterization of the emission controls that are currently in use to limit such emissions;

2. The basis for the exposure and risk assessment, including radionuclide emissions data, characteristics of the release point(s), and the sources for the demographic and meteorological data that were used;

3. The results of the risk assessment, including estimates of the exposure and lifetime fatal cancer risk to nearby individuals, the exposure and number of committed deaths/year in the regional (0-80 km) populations, and the distribution of the fatal cancer risk in the regional populations; and

4. An evaluation of supplementary control options and costs for source categories or segments of source categories with the highest estimated risks and impacts.

In making the risk assessments every effort has been made to assess facilities on a site-specific basis, using measured data for emissions and actual data on the configuration of the release point(s) and the locations of nearby individuals. For source categories where measured emissions data are not available, emissions have been estimated using the bases and the assumptions given for that source category. Where locations of nearby individuals are not known, the assessment is made to the point of maximum offsite concentrations. The intent of each assessment is to provide a realistic estimate of the exposures and risks that could be received by individuals.

For certain source categories, the number of facilities makes such site-specific evaluations impractical. In these instances, for example nuclear power reactors, reference (actual) facilities are used or model facilities are defined and evaluated. When a reference or model facility is used, the exposure and risk estimates presented are for hypothetical individuals and populations selected as representative of the demography around actual facilities.

The exposures presented represent 50-year committed dose equivalents. Estimated doses are presented for organs where the dose represents 10 percent or more of the fatal cancer risk. For radon exposures, both the radon concentration (pCi/l) and the working levels (WL) are reported. The working levels include the contribution from radon decay products, calculated as a function of distance (see Volume I).

The fatal cancer risks for nearby or maximum individuals are lifetime risks. They represents the probability of a typical individual dying from a lifetime (70 year) exposure to the concentration of radionuclides estimated at that environmental location. Chapter 7 of Volume I discusses the uncertainties that are associated with this assumption. The number of committed fatal cancers per year (deaths/year) of operation is the

estimated number of cancers that will occur in the exposed population from one year's release of radionuclides. Due to the latency period for cancers, these deaths will occur in the future, not in the year that the release takes place.

As discussed in Chapter 7 of Volume I, modeling uncertainties, completeness uncertainties, and parameter uncertainties are associated with each of the exposure and risk estimate. However, throughout this volume, exposure and risk estimates are presented as discrete values. The reader is referred to Chapter 7 of Volume I and the "Analysis of the Uncertainties in the Risk Assessment Performed in Support of the Proposed NESHAPS for Radionuclides" (EPA89) for information on the range and distribution of the parameter uncertainties associated with the estimates.

REFERENCES

EPA89 U.S. Environmental Protection Agency, "Analysis of the Uncertainties in the Risk Assessment Performed in Support of the Proposed NESHAPS for Radionuclides," Washington, DC, September 1989.

2. DEPARTMENT OF ENERGY (DOE) FACILITIES

2.1 OVERVIEW AND SUMMARY OF RESULTS

2.1.1 General Description of DOE Facilities

The DOE facilities source category comprises sites that are owned by the Federal government and operated by contractors under the supervision of the DOE. The sites addressed in this chapter are the active DOE sites that release significant quantities of radionuclides to the air. These facilities and their locations are listed in Table 2.1-1. These facilities are engaged in numerous aspects of nuclear energy. They support the nation's nuclear weapons capability by designing and producing nuclear weapons for the Department of Defense (DOD). They support the commercial nuclear power sector through enrichment of uranium and nuclear reactor development and safety programs. They are also involved in biomedical research, environmental safety, and nuclear waste disposal programs.

The diversity of operations at these sites makes it difficult to assess DOE facilities on a generic basis. The major emissions from the facilities, however, are similar and consist largely of inert gases such as argon-41, krypton-85, krypton-88, and xenon-133. These gases are heavier than air and only slightly soluble in water. Tritium, oxygen-15, uranium-234, and uranium-238 are also commonly emitted.

A site-by-site discussion of each facility is presented in the following sections along with an estimate of the doses and risks associated with the current (1986) releases of radionuclides to the atmosphere. Details of the inputs supplied to the AIRDOS-EPA/DARTAB/RADRISK risk assessment computer codes are presented for each site in Appendix A.

Historically, the Department of Energy has been self-regulating with respect to environmental controls. Since the 1970's, limits on releases of radioactive materials have roughly paralleled those established by the Nuclear Regulatory Commission (NRC). In 1985, the EPA promulgated a NESHAP for DOE facilities (40 CFR 61, Subpart H) which limits radionuclide releases to air from any DOE facility to quantities that do not cause nearby individuals a dose greater than 25 mrem/y to the whole body or 75 mrem/y to any organ.

The summary tables in Section 2.1 and the individual facility discussions incorporate source terms, stack heights, meteorology, and other model parameters that reflect comments received from DOE and the specific facilities. Model input parameters are described in the AIRDOS input sheets presented in the appendix. Draft version input sheets may be compared to these sheets to determine changes in AIRDOS input parameters.

Table 2.1-1. Department of Energy facilities.

Facility	Location
Los Alamos National Laboratory	Los Alamos, New Mexico
Oak Ridge Reservation	Oak Ridge, Tennessee
Savannah River Plant	Aiken, South Carolina
Reactive Metals, Inc.	Ashtabula, Ohio
Feed Materials Production Center	Fernald, Ohio
Hanford Reservation	Richland, Washington
Brookhaven National Laboratory	Long Island, New York
Mound Facility	Miamisburg, Ohio
Idaho National Engineering Laboratory	Upper Snake River,Idaho
Lawrence-Berkeley Laboratory	Berkeley, California
Paducah Gaseous Diffusion Plant	Paducah, Kentucky
Lawrence Livermore/Sandia Laboratory	Livermore, California
Portsmouth Gaseous Diffusion Plant	Piketon, Ohio
Argonne National Laboratory	Argonne, Illinois
Pinellas Plant	Pinellas County, Florida
Nevada Test Site	Nye County, Nevada
Knolls Atomic Power Laboratory	Kesselring, New York
Battelle Memorial Institute	Columbus, Ohio
Fermi National Accelerator Laboratory	Batavia, Illinois
Sandia National Laboratories/Lovelace	Albuquerque, New Mexico
Bettis Atomic Power Laboratory	West Mifflin, Pennsylvania
Knolls Atomic Power Laboratory	Windsor, Connecticut
Rocky Flats Plant	Jefferson Co., Colorado
Pantex Plant	Amarillo, Texas
Knolls Atomic Power Laboratory	Schenectady, New York
Ames Laboratory	Ames, Iowa
Rockwell International	Santa Susana, California

2.1.2 Summary of the Dose and Risk Assessment

The following tables present the tabulated results of the risk assessment for 27 facilities in this source category. Table 2.1-2 shows the risk figures representing the highest cancer risk to a selected individual. Table 2.1-3 presents the aggregate risk distribution table for all DOE facilities. Table 2.1-4 presents the population exposures and total deaths per year for all DOE facilities.

Results for each site are also tabulated and presented in the following sections.

Table 2.1-2 Summary of doses and risks to nearby individuals from DOE facilities due to 1986 emmissions.

Site	Primary Radio-nuclide	1986 Emissions (Ci/y)	Organ Doses (mrem/y)		Maximum Individual Risk
Los Alamos Laboratory, NM	O-15	8.6E+4	Gonads	9.5E+0	2E-4
	C-11	1.8E+4	Remainder	7.4E+0	
	N-13	4.8E+3	Breast	8.9E+0	
			Lungs	8.8E+0	
			Red marrow	7.0E+0	
Oak Ridge National Lab., TN	U-234	1.5E-1	Lungs	2.2E+1	8E-5
	H-3	3.1E+4	Remainder	2.0E+0	
	U-238	2.8E-2			
Savannah River Plant, GA	H-3	4.2E+5	Remainder	3.2E+0	8E-5
	Ar-41	8.3E+4	Gonads	2.6E+0	
			Breast	2.6E+0	
			Lungs	2.7E+0	
			Red marrow	2.6E+0	
Reactive Metals, Inc., OH	U-234	5.6E-4	Lungs	2.5E+1	4E-5
	U-238	5.3E-3			
Feed Materials Prod. Ctr., OH	U-234	2.0E-2	Lungs	1.9E+1	3E-5
	U-238	2.0E-2			
Hanford Reservation, WA	Ar-41	1.3E+5	Lungs	2.8E+0	3E-5
	Pu-238	8.9E-2	Remainder	1.0E+0	
	Pu-239	3.1E-3	Gonads	1.1E+0	
			Endosteum	6.3E+0	
Brookhaven National Lab., NY	Ar-41	1.2E+3	Gonads	8.0E-1	2E-5
			Remainder	6.2E-1	
			Breast	7.2E-1	
			Red marrow	6.2E-1	
			Lungs	6.1E-1	

Table 2.1-2 Summary of doses and risks to nearby individuals from DOE facilities (continued).

Site	Primary Radio-nuclide	1986 Emissions (Ci/y)	Organ Doses (mrem/y)		Maximum Individual Risk
Mound Facility, OH	H-3	3.6E+3	Remainder	4.1E-2	1E-6
			Gonads	3.7E-2	
			Breast	3.7E-2	
			Lungs	3.8E-2	
			Red marrow	3.7E-2	
Idaho National Eng. Lab., ID	Ar-41	1.9E+3	Gonads	2.9E-2	6E-7
	Sb-125	9.3E-1	Remainder	2.3E-2	
	Kr-88	1.6E+2	Breast	2.7E-2	
			Lungs	2.4E-2	
			Red marrow	2.3E-2	
Lawrence Berkeley Lab., CA	H-3	7.6E+1	Remainder	1.9E-2	5E-7
			Gonads	1.8E-2	
			Red marrow	2.5E-2	
			Breast	1.8E-2	
			Lungs	1.8E-2	
Paducah Gaseous Diff. Plant, KY	U-234	1.8E-4	Lungs	2.5E-1	4E-7
	U-238	1.8E-4			
Lawrence Livermore Lab., CA	H-3	1.8E+3	Remainder	1.1E-2	3E-7
			Gonads	1.1E-2	
			Breast	1.1E-2	
			Lungs	1.1E-2	
			Red marrow	1.1E-2	
Portsmouth Gaseous Diff. Plant, OH	U-234	2.3E-2	Endosteum	3.4E-1	2E-7
	U-238	1.4E-2	Remainder	3.0E-2	
			Red marrow	2.3E-2	
Argonne National Lab., IL	C-11	9.0E+1	Lungs	3.1E-2	1E-7
	H-3	5.0E+1	Remainder	2.7E-3	

Table 2.1-2 Summary of doses and risks to nearby individuals from DOE facilities (continued).

Site	Primary Radio-nuclide	1986 Emissions (Ci/y)	Organ Doses (mrem/y)		Maximum Individual Risk
Pinellas Plant, FL	H-3	1.9E+2	Remainder	4.7E-3	1E-7
			Gonads	4.4E-3	
			Breast	4.4E-3	
			Lungs	4.4E-3	
			Red marrow	4.3E-3	
Nevada Test Site, NV	Xe-133	3.6E+4	Gonads	5.3E-3	1E-7
	H-3	1.2E+2	Remainder	3.5E-3	
			Breast	6.5E-3	
			Thyroid	1.9E-2	
Knolls Lab-Kesselring, NY	Ar-41	1.6E-1	Remainder	3.8E-3	1E-7
	CO-60	3.4E-6	Red marrow	6.9E-3	
	C-14	3.4E-1	Breast	4.4E-3	
			Gonads	2.5E-3	
			Lungs	2.5E-3	
Battelle Memorial Inst., OH	K-40	3.0E-4	Lungs	3.1E-3	2E-8
	U-235	2.6E-6	Gonads	8.7E-4	
	Pu-239	4.0E-7	Remainder	7.2E-4	
			Breast	7.8E-4	
Fermi National Lab., IL	C-11	3.4E+0	Gonads	9.2E-4	2E-8
			Remainder	7.1E-4	
			Breast	8.6E-4	
			Lungs	9.1E-4	
			Red marrow	7.0E-4	
Sandia National Lab.-Lovelace, NM	Ar-41	5.5E+0	Remainder	5.3E-4	1E-8
	Pb-212	8.5E-3	Gonads	5.9E-4	
			Lungs	1.2E-3	
			Breast	5.4E-4	
			Red marrow	5.6E-4	
Rocky Flats Plant, CO	U-238	1.7E-5	Lungs	6.3E-3	1E-8
	Am-241	4.8E-6	Endosteum	1.6E-2	
			Remainder	7.5E-4	

Table 2.1-2 Summary of doses and risks to nearby individuals from DOE facilities (continued).

Site	Primary Radio-nuclide	1986 Emissions (Ci/y)	Organ Doses (mrem/y)		Maximum Individual Risk
Bettis Atomic Power Lab., PA	U-234 U-238 Sb-125	6.0E-7 6.0E-7 3.1E-5	Lungs	4.3E-3	1E-8
Knolls Lab-Windsor, CT	Ar-41	7.8E-2	Gonads Remainder Breast Red marrow Lungs	3.8E-4 3.0E-4 3.5E-4 3.0E-4 2.9E-4	8E-9
Pantex Plant, TX	U-238	1.0E-5	Lungs	2.2E-3	4E-9
Knolls Lab-Knolls, CT	U-234	3.3E-6	Lungs	1.7E-3	3E-9
Ames Laboratory, IA	H-3	7.6E-2	Remainder Gonads Breast Red marrow Lungs	1.6E-5 1.3E-5 1.3E-5 1.3E-5 1.3E-5	4E-10
Rocketdyne Rockwell, CA	Sr-90	1.3E-5	Red marrow Endosteum	7.0E-6 1.5E-5	2E-11

Table 2.1-3. Distribution of fatal cancer risk in the population.

Risk Interval	Number of Persons	Deaths/y
1E-1 to 1E+0	0	0
1E-2 to 1E-1	0	0
1E-3 to 1E-2	0	0
1E-4 to 1E-3	2*	5E-6
1E-5 to 1E-4	590,000	2E-1
1E-6 to 1E-5	1,000,000	3E-2
< 1E-6	65,000,000	1E-2
TOTALS	67,000,000	2E-1

* EPA believes there are people at this risk at two facilities (RMI, LASL). However, we cannot quantify the number because a site visit has not been made.

Table 2.1-4 Summary of doses and risks to the regional population (0-80 km) around DOE facilities.

Site	0-80 km Population	Population Organ Exposure (person-rem/y)		Deaths/y
Los Alamos Laboratory, NM	160,000	Gonads	1.0E+1	4E-3
		Remainder	1.1E+1	
		Breast	9.7E+0	
		Lungs	1.1E+1	
		Red marrow	9.2E+0	
Oak Ridge National Lab., TN	850,000	Lungs	4.3E+2	3E-2
		Remainder	7.8E+1	
Savannah River Plant, GA	550,000	Remainder	6.7E+2	2E-1
		Gonads	5.5E+2	
		Breast	5.5E+2	
		Lungs	5.6E+2	
		Red marrow	5.5E+2	
Reactive Metals, Inc., OH	1,400,000	Lungs	3.2E+1	8E-4
Feed Materials Prod. Ctr., OH	3,300,000	Lungs	1.1E+2	3E-3
Hanford Reservation, WA	350,000	Lungs	5.6E+1	6E-3
		Remainder	1.7E+1	
		Gonads	1.5E+1	
		Endosteum	1.7E+2	
Brookhaven National Lab., NY	5,200,000	Gonads	3.8E+0	1E-3
		Remainder	3.0E+0	
		Breast	3.4E+0	
		Red marrow	2.9E+0	
		Lungs	2.9E+0	

Table 2.1-4 Summary of doses and risks to the regional population (0-80 km) around DOE facilities (continued).

Site	0-80 km Population	Population Organ Exposure (person-rem/y)		Deaths/y
Mound Facility, OH	2,900,000	Remainder	3.3E+0	3E-3
		Gonads	3.0E+0	
		Breast	3.0E+0	
		Lungs	3.0E+0	
		Red marrow	3.0E+0	
Idaho National Eng. Lab., ID	100,000	Gonads	7.3E-2	2E-5
		Remainder	6.3E-2	
		Breast	6.8E-2	
		Lungs	6.1E-2	
		Red marrow	5.7E-2	
Lawrence Berkeley Lab., CA	5,000,000	Remainder	7.8E-1	3E-4
		Gonads	7.0E-1	
		Red marrow	1.0E+0	
		Breast	7.0E-1	
		Lungs	7.0E-1	
Paducah Gaseous Diff. Plant, KY	500,000	Lungs	3.1E-1	1E-5
Lawrence Livermore Lab., CA	5,300,000	Remainder	4.2E+0	1E-3
		Gonads	3.7E+0	
		Breast	3.7E+0	
		Lungs	3.8E+0	
		Red marrow	3.7E+0	
Portsmouth Gaseous Diff. Plant, OH	620,000	Endosteum	5.7E+0	9E-5
		Remainder	7.7E-1	
		Red marrow	4.0E-1	
Argonne National Lab., IL	7,900,000	Lungs	2.5E-1	8E-5
		Remainder	2.1E-1	

Table 2.1-4 Summary of doses and risks to the regional population (0-80 km) around DOE facilities (continued).

Site	0-80 km Population	Population Organ Exposure (person-rem/y)		Deaths/y
Pinellas Plant, FL	1,900,000	Remainder	5.3E-1	2E-4
		Gonads	4.7E-1	
		Breast	4.7E-1	
		Lungs	4.7E-1	
		Red marrow	4.7E-1	
Nevada Test Site, NV	3,500	Gonads	1.2E-2	3E-6
		Remainder	8.1E-3	
		Breast	1.5E-2	
		Thyroid	5.7E-2	
Knolls Lab-Kesselring, NY	1,200,000	Remainder	3.2E-2	2E-5
		Red marrow	6.5E-2	
		Breast	3.7E-2	
		Gonads	1.5E-2	
		Lungs	1.8E-2	
Battelle Memorial Inst., OH	1,900,000	Lungs	1.5E-2	3E-6
		Gonads	6.2E-3	
		Remainder	5.2E-3	
		Breast	5.7E-3	
Fermi National Lab., IL	7,700,000	Gonads	4.1E-3	1E-6
		Remainder	3.2E-3	
		Breast	3.9E-3	
		Lungs	4.1E-3	
		Red marrow	3.2E-3	
Sandia National Lab.-Lovelace, NM	500,000	Remainder	1.9E-2	8E-6
		Gonads	2.1E-2	
		Lungs	4.9E-2	
		Breast	1.9E-2	
		Red marrow	2.1E-2	
Rocky Flats Plant, CO	1,900,000	Lungs	1.2E-1	9E-6
		Endosteum	2.0E-1	
		Remainder	9.3E-3	

Table 2.1-4 Summary of doses and risks to the regional population (0-80 km) around DOE facilities (continued).

Site	0-80 km Population	Population Organ Exposure (person-rem/y)		Deaths/y
Bettis Atomic Power Lab., PA	3,100,000	Lungs	3.5E-2	1E-6
Knolls Lab-Windsor, CT	3,200,000	Gonads	2.3E-3	2E-6
		Remainder	4.2E-3	
		Breast	4.9E-3	
		Red marrow	8.1E-3	
		Lungs	2.5E-3	
Pantex Plant, TX	260,000	Lungs	3.5E-3	7E-8
Knolls Lab-Knolls, CT	1,200,000	Lungs	3.1E-2	1E-6
Ames Laboratory, IA	680,000	Remainder	2.3E-4	9E-8
		Gonads	1.8E-4	
		Breast	1.8E-4	
		Red marrow	1.8E-4	
		Lungs	1.8E-4	
Rocketdyne Rockwell, CA	8,800,000	Red marrow	1.4E-3	7E-8
		Endosteum	3.2E-3	

2.1.3 Summary of the Supplementary Control Alternatives

The facilities chosen for discussion of supplemental control alternatives are those that yielded an effective dose equivalent of 1 mrem/yr or higher. These facilities are:

1. Oak Ridge Reservation
2. Los Alamos Scientific Laboratory
3. Savannah River Plant
4. FMPC

Current emission control technologies and detailed discussions of supplemental control technologies at each of these facilities are presented in Sections 2.2 through 2.7.

Alternative 1: baseline emissions

MIR: 2E-4
Incidence: 0.22
Impact: None

Alternative 2: emissions limited to 10 mrem/y EDE.

MIR: 8.1E-5
Incidence: 0.24
Impact, alternative 1 to alternative 2:
Incremental Capital Cost: $0
Incremental Annual Operating Cost: $0
Incremental Incidence Reduction: None

All DOE facilities have baseline emissions corresponding to an EDE of 10 mrem/y or less. Therefore, Alternative 2 is identical to Alternative 1.

Alternative 3: emissions limited to 3 mrem/y EDE.

MIR: 4E-5
Incidence: 0.22
Impact, alternative 2 to alternative 3:
Incremental Capital Cost: $5.9 million
Incremental Annual Operating Cost: $182,000
Incremental Incidence Reduction: 0.02

To reach this limit, supplemental emission controls would be required at two DOE facilities: Oak Ridge National Laboratory and Los Alamos National Laboratory.

At Oak Ridge, an additional stage HEPA filter and high-energy Venturi scrubber, at an estimated capital cost of $2,650,000, would reduce emissions of uranium-234 and uranium-238 from the Y-12 plant. In addition, a tritiated water sieve/dryer system, at an estimated capital cost of $1,660,000, would reduce emissions of tritium from ORNL. These emission reductions would be sufficient to allow ORNL to reach the Alternative B limit.

At Los Alamos, beam stop modifications and a delay tunnel and new venting stack at the Meson Physics Facility would sufficiently reduce emissions of oxygen-15, carbon-11, and nitrogen-13, at a capital cost of $1,600,000.

Alternative 4: emissions limited to 1.0 mrem/y EDE.

MIR: 2.4E-5

Incidence: 0.094

Impact, alternative 3 to alternative 4:

Incremental Capital Cost: $134 million
Incremental Annual Operating Cost: $8,111,000
Incremental Incidence Reduction: 0.036

To reach Alternative 4, additional emission controls would be required at RMI, Savannah River and FMPC.

For Savannah River, additional stage HEPA filters would be required on the F and H stacks and in the P, X, and C reactor areas, at an estimated capital cost of $130 million.

For FMPC, HEPA filters for Plants 4, 5, and 8 and additional dust collector and scrubber stacks, at an estimated capital cost of $4.2 million would be required.

2.1.4 Effect of Supplementary Control Alternatives

Tables 2.1-5 through 2.1-7 present the risk distributions for the population at risk for the DOE facilities. Table 2.1-5 presents the risk distribution for the baseline case, which assumes 1986 emissions with no supplemental control strategies implemented. Table 2.1-6 presents the risk distribution for Alternative 3, which assumes that supplemental controls have been applied to ensure that an effective dose equivalent to nearby individuals would be no more than 3 mrem/y at any of the DOE facilities. Table 2.1-7 presents the risk distribution for Alternative 4, which assumes that supplemental controls have been applied to ensure that an effective dose equivalent to nearby individuals would be no more than 1 mrem/y at any of the DOE facilities.

The maximum individual risks, assuming implementation of Alternative 4 supplemental control strategies, are presented in Table 2.1-8.

The number of deaths per year, assuming implementation of Alternative 4 supplemental control strategies, are presented in Table 2.1-9.

Table 2.1-5. Baseline risk assessment for DOE facilities.

Highest Lifetime Individual Fatal Cancer Risk: 1E-04

Population Risk (those within 80 km): 0.2

Distribution of Fatal Cancer Risk in Populations Within 80 km:

Risk interval	Number of persons	Deaths/y
1E-2 to 1E-1	0	0
1E-3 to 1E-2	0	0
1E-4 to 1E-3	2	5E-6
1E-5 to 1E-4	590,000	2E-1
1E-6 to 1E-5	1,000,000	3E-2
<1E-6	65,000,000	1E-2
Total	67,000,000	2E-1

Table 2.1-6. Risks when emmissions are limited to 3 mrem/y EDE.

Highest Lifetime Individual Fatal Cancer Risk: 4E-05

Population Risk (those within 80 km): 0.2

Distribution of Fatal Cancer Risk in Populations Within 80 km:

Risk interval	Number of persons	Deaths/y
1E-2 to 1E-1	0	0
1E-3 to 1E-2	0	0
1E-4 to 1E-3	1	2E-6
1E-5 to 1E-4	560,000	2E-1
1E-6 to 1E-5	250,000	7E-3
<1E-6	66,000,000	2E-2
Total	67,000,000	2E-1

Table 2.1-7. Risks when emmissions are limited to 1 mrem/y EDE.

Highest Lifetime Individual Fatal Cancer Risk: 2E-05

Population Risk (those within 80 km): 0.09

Distribution of Fatal Cancer Risk in Populations Within 80 km:

Risk interval	Number of persons	Deaths/y
1E-2 to 1E-1	0	0
1E-3 to 1E-2	0	0
1E-4 to 1E-3	0	0
1E-5 to 1E-4	250,000	4E-2
1E-6 to 1E-5	540,000	4E-2
<1E-6	66,000,000	1E-2
Total	67,000,000	1E-1

Table 2.1-8. Maximum individual risk, with Alternative 4 supplemental control strategies.

Site	Primary Radio-nuclide	1986 Emissions (Ci/y)*	Maximum Individual Risk**
Hanford Reservation, WA	Ar-41 Pu-238 Pu-239	1.3E+5 8.9E-2 3.1E-3	3E-5
Savannah River Plant, GA	H-3 Ar-41	4.2E+5 8.3E+4	2E-5
Oak Ridge National Lab., TN	U-234 H-3 U-238	1.5E-1 3.1E+4 2.8E-2	2E-5
Brookhaven National Lab., NY	Ar-41	1.2E+3	2E-5
Los Alamos Laboratory, NM	O-15 C-11 N-13	8.6E+4 1.8E+4 4.8E+3	2E-5
Reactive Metals, Inc., OH	U-234 U-238	5.6E-4 5.3E-3	1E-5
Feed Materials Prod. Ctr., OH	U-234 U-238	2.0E-2 2.0E-2	1E-5
Mound Facility, OH	H-3	3.6E+3	1E-6
Idaho National Eng. Lab., ID	Ar-41 Sb-125 Kr-88	1.8E+3 9.3E-1 1.4E+2	6E-7
Lawrence Berkeley Lab., CA	H-3	7.6E+1	5E-7

* With supplemental emission controls.
** Nearby generic individual from population run.

Table 2.1-8. Maximum individual risk, with Alternative 4 supplemental control strategies (continued).

Site	Primary Radio-nuclide	1986 Emissions (Ci/y)*	Maximum Individual Risk**
Paducah Gaseous Diff. Plant, KY	U-234 U-238	1.8E-4 1.8E-4	4E-7
Lawrence Livermore Lab., CA	H-3	2.0E+3	3E-7
Portsmouth Gaseous Diff. Plant, OH	U-234 U-238	2.8E-2 1.0E-2	2E-7
Argonne National Lab., IL	C-11 H-3	9.0E+1 5.0E+1	1E-7
Pinellas Plant, FL	H-3	1.9E+2	1E-7
Nevada Test Site, NV	Xe-133 H-3	3.6E+4 1.2E+2	1E-7
Knolls Lab-Kesselring, NY	Ar-41 CO-60 C-14	1.6E-1 3.4E-6 3.4E-1	1E-7
Battelle Memorial Inst., OH	K-40 U-235 Pu-239	3.0E-4 2.6E-6 4.0E-7	2E-8
Fermi National Lab., IL	C-11	3.4E+0	2E-8
Sandia National Lab.-Lovelace, NM	Ar-41 Pb-212	5.5E+0 8.5E-3	1E-8
Rocky Flats Plant, CO	U-238 Am-241	1.7E-5 4.8E-6	1E-8

* With supplemental emission controls.
** Nearby generic individual from population run.

Table 2.1-8. Maximum individual risk, with Alternative 4 supplemental control strategies (continued).

Site	Primary Radio-nuclide	1986 Emissions (Ci/y)*	Maximum Individual Risk**
Bettis Atomic Power Lab., PA	U-234 U-238 Sb-125	6.0E-7 6.0E-7 3.2E-5	1E-8
Knolls Lab-Windsor, CT	Ar-41	7.8E-2	8E-9
Pantex Plant, TX	U-238	1.0E-5	4E-9
Knolls Lab-Knolls, CT	U-234	3.3E-6	3E-9
Ames Laboratory, IA	H-3	7.6E-2	4E-10
Rocketdyne Rockwell, CA	Sr-90	1.3E-5	2E-11

* With supplemental emission controls.
** Nearby generic individual from population run.

Table 2.1-9. Fatal cancers/year to nearby individuals, with Alternative 4 supplemental control technologies.

Site	0-80 km Population	Deaths/y*
Los Alamos Laboratory, NM	160,000	2E-3
Oak Ridge National Lab., TN	550,000	7E-3
Savannah River Plant, GA	550,000	8E-2
Reactive Metals, Inc., OH	1,400,000	7E-5
Feed Materials Prod. Ctr., OH	3,300,000	9E-4
Hanford Reservation, WA	350,000	6E-3
Brookhaven National Lab., NY	5,200,000	1E-3
Mound Facility, OH	2,900,000	3E-3
Idaho National Eng. Lab., ID	100,000	2E-5
Lawrence Berkeley Lab., CA	5,000,000	3E-4
Paducah Gaseous Diff. Plant, KY	500,000	1E-5
Lawrence Livermore Lab., CA	5,300,000	1E-3
Portsmouth Gaseous Diff. Plant, OH	620,000	9E-5
Argonne National Lab., IL	7,900,000	8E-5
Pinellas Plant, FL	1,900,000	2E-4

* In population within 80 km.

Table 2.1-9. Fatal cancers/year to nearby individuals, with Alternative 4 supplemental control technologies (continued).

Site	0-80 km Population	Deaths/y*
Nevada Test Site, NV	3,500	3E-6
Knolls Lab-Kesselring, NY	1,200,000	2E-5
Battelle Memorial Inst., OH	1,900,000	3E-6
Fermi National Lab., IL	7,700,000	1E-6
Sandia National Lab.-Lovelace, NM	500,000	8E-6
Rocky Flats Plant, CO	1,900,000	9E-6
Bettis Atomic Power Lab., PA	3,100,000	1E-6
Knolls Lab-Windsor, CT	3,200,000	2E-6
Pantex Plant, TX	260,000	7E-8
Knolls Lab-Knolls, CT	1,200,000	1E-6
Ames Laboratory, IA	680,000	9E-8
Rocketdyne Rockwell, CA	8,800,000	7E-8

* In population within 80 km.

Table 2.1-10. Distribution of fatal cancer risk in the populations within 80 km with Alternative 4 supplemental control technologies.

Risk Interval	Number of Persons	Deaths/y
1E-1 to 1E+0	0	0
1E-2 to 1E-1	0	0
1E-3 to 1E-2	0	0
1E-4 to 1E-3	0	0
1E-5 to 1E-4	250,000	4E-2
1E-6 to 1E-5	540,000	4E-2
< 1E-6	66,000,000	1E-2
Totals	67,000,000	1E-1

2.2 RMI COMPANY

2.2.1 Description and Existing Controls

2.2.1.1 Site Description

RMI Company (RMI), formerly Reactive Metals, Inc., is located in northeastern Ohio in the City and County of Ashtabula approximately 80 km northeast of Cleveland, 65 km north of Warren, and 80 km north of Youngstown, the closest major population centers. According to the 1980 U.S. Census, the population within 80 km of the facility is about 1.4 million.

2.2.1.2 Major Release Points and Existing Emission Control Technology

RMI operates an extrusion plant which fabricates uranium rods and tubing from ingots for use as fuel elements in nuclear reactors. The ingots are first extruded by a press into either rods or tubing, cooled, and then sectioned by abrasive sawing. Scrap material is fed to a pyrophoric incinerator to form a uranium oxide. The RMI facility also conducts activities an an NRC licensee. Releases from both DOE and NRC activities are included in this assessment.

2.2.2 Basis for the Dose and Risk Assessment

2.2.2.1 Source Terms and Release Point Characterization

The only radioactive material released to the air from RMI is insoluble natural uranium. The total airborne releases, in Ci/y, from all sources during 1986 are listed below in Table 2.2-1.

Table 2.2-1. Radionuclides released to air during 1986 from RMI.*

Nuclide	Release Rate (Ci/y)
U-234	5.6E-4
U-235	4.4E-5
U-238	5.3E-3

* Ajusted, see text.

Releases from the RMI plant consist of natural, depleted, and slightly enriched uranium. During 1986, the year for which the assessment is made, control technology upgrades consisting of HEPA filters were begun at RMI. These upgrades were completed on stack 4 during 1986 and reduced the emissions for that stack from approximately 12,000 μCi for the first half of the year to 0.06 μCi during the second half. The emissions shown in Table 2.2-1 were used to assess the risk. They reflect the emissions during 1986 adjusted to account for the addition of HEPA filters on stack 4. Continued upgrades of the effluent controls during 1987, 1988, and the discontinuation of stacks without HEPA filtration have further reduced emissions. In 1988, RMI reports a total uranium release of 7E-4 Ci/y, approximately a factor of 10 lower than the source term used in this assessment (RMI89).

To evaluate the health impact from the operation of RMI, releases from the facility were assumed to be from six stacks with heights given in the Appendix. The released uranium-234 was assumed to be in equilibrium with its daughters thorium-234 and protactinium-234m. Default particle sizes (1.00 AMAD) and solubility class Y were assumed based on information from RMI (RMI89).

2.2.2.2 Other Parameters Used in the Assessment

The nearest individual was assumed to be located 310 m from the release point (RMI86).

Meteorological data used in the assessment are from Erie, Pennsylvania. The 0-80 km population distribution was produced using the computer code SECPOP and 1980 Census Bureau data. Food consumption rates appropriate to an urban location were used.

2.2.3 Results of the Dose and Risk Assessment

The major contributors to exposure are uranium-234 (52 percent) and uranium-238 (46 percent). The predominant exposure pathway is inhalation for uranium-234 and uranium-238.

The results of the dose and risk assessment are presented in Tables 2.2-2 through 2.2-4. Table 2.2-2 presents the doses

received by nearby individuals and the regional population. Doses to organs accounting for 10 percent or more of the risk are presented. Table 2.2-3 presents the estimated lifetime fatal cancer risk to nearby individuals with maximum exposure, as well as estimated deaths per year in the regional population. Table 2.2-4 presents the estimated distribution of fatal cancer risk to the regional population.

Table 2.2-2. Estimated radiation dose rates from RMI.

Organ	Nearby Individuals (mrem/y)	Regional Population (person-rem/y)
Lungs	2.5E+1	3.2E+1

Table 2.2-3. Estimated fatal cancer risks from RMI.

Nearby Individuals Lifetime Fatal Cancer Risk	Regional (0-80 km) Population Deaths/y
4E-5	8E-4

Table 2.2-4. Estimated distribution of the fatal cancer risk to the regional (0-80 km) population from RMI.

Risk Interval	Number of Persons	Deaths/y
1E-1 to 1E+0	0	0
1E-2 to 1E-1	0	0
1E-3 to 1E-2	0	0
1E-4 to 1E-3	0	0
1E-5 to 1E-4	1	6E-7
1E-6 to 1E-5	98,000	2E-4
< 1E-6	1,400,000	5E-4
Totals	1,400,000	8E-4

2.2.4 Supplementary Controls

As noted in Section 2.2.2.1, RMI has recently completed the upgrade of its effluent control system which was begun in 1986. This has consisted of addition of HEPA filters on stacks 1 and 4 and the discontinuation of unfiltered stacks.

2.2.4.1 Emission Reduction

The upgrade of the effluent control system has resulted in a reduction of uranium emissions. During 1986, when only stack 4 was retro-fittee for half the year, total uranium releases were 1.7E-2 Ci/y. During 1988, with the upgrade complete, total uranium releases were 7E-4 Ci/y, a reduction of 96 percent.

2.2.4.2 Costs of Supplementary Controls

No data were provided by RMI on the costs of the additional effluent controls. Further reductions could be achieved by placing additional HEPA filters in series. No estimates of the costs or efficiencies of such additional controls have been made.

2.3 LOS ALAMOS NATIONAL LABORATORY

2.3.1 Description and Existing Controls

2.3.1.1 Site Description

Los Alamos National Laboratory is one of the prime research and development centers for DOE's nuclear weapons program. This facility is located about 100 km north-northeast of Albuquerque, New Mexico. In addition to defense-related activities, programs include research in the physical sciences, energy resources, environ- mental studies, and biomedical applications of radiation.

Radionuclides are released from 13 technical areas at this site. These areas contain research reactors that produce materials for use in high-temperature chemistry applications, weapons systems development, nuclear safety program development, accelerator operations, biomedical research, development of isotope separation processes, and waste disposal.

2.3.1.2 Major Release Points and Existing Emission Control Technology

The following sections describe the emission control technology currently in use at the six sources being evaluated. Possible application of additional control technology, the effects of such improvements on discharge rates, and the costs of such improvements are also discussed. Generic information on the emission control technology for the nonspecific or minor sources is also provided (Mo86).

2.3.1.2.1 Omega West Reactor Stack

The Omega West research reactor, located in TA-2, is used for a wide variety of experimental programs. The reactor is a heterogeneous water-cooled tank-type reactor, with a maximum power level of 8 MWth.

Argon-41 (t 1/2 =1.8 hr) was the only radionuclide above the limits of detectability released to the atmosphere from the Omega West reactor stack in 1986. The argon-41 is produced by neutron activation of the natural argon in air. Process air streams and part of the building ventilation exhaust are discharged to the atmosphere from the reactor stack, which is located about 300 m from the reactor. The total air flow to the stack is about 28.3 m^3/min. The stack is approximately 0.2 m in diameter, and its height is approximately 46 m above ground level. The stack is continuously monitored. Charcoal cartridges are installed in the process air stream to remove any radioiodine present. There is no technology in place to remove argon-41 from the air stream flowing to the stack. Some reduction in the argon-41 level is provided by delay (approximately one hour) as the air flows from the reactor building to the stack.

2.3.1.2.2 LAMPF Main Stack

The Clinton P. Anderson Los Alamos Meson Physics Facility (LAMPF) in TA-53 consists primarily of a linear proton accelerator, approximately 800 m long, designed to produce an 800 MeV proton beam with an average intensity of one milliampere. The proton beam and secondary particles produced when the energetic protons strike a target are used in a wide variety of experimental programs. Fields of investigation include medium energy nuclear physics, biophysics, radiochemistry, and cancer therapy.

Interaction of the proton beam and secondary particles with air produces several activation products. These activation products, which include beryllium-7, carbon-11, nitrogen-13, oxygen-15, argon-41, and tritium, were the only radionuclides released to the atmosphere from the LAMPF facility in 1986. The activation products are discharged to the atmosphere from the LAMPF main stack. The main stack receives the air flow from a single fan exhaust system. Air flow to the main stack is about 480 m^3/min. The stack has a diameter which varies from about 1.5 m to 0.9 m at the top. The stack height is about 30.5 m above ground level.

Air flowing to the LAMPF stack is passed through a single stage of HEPA filtration to remove particulates. There is no technology in place to remove gaseous radionuclides from the air stream. Areas where the air activation products are produced are continuously ventilated to remove the radionuclides as they are formed. Due to the short half-lives of some of the activation products formed, some reduction in the radionuclide release is obtained by decay due to holdup as the air flows from the various source points to the stack. The extent of the reduction will depend on the radionuclides. In the case of oxygen-15 (t 1/2 = 2.0 min), the holdup could reduce the release significantly. In the case of tritium (t 1/2 = 12.3 yr) and

beryllium-7 (t 1/2 = 53.3 days), the holdup would have essentially no effect on the releases.

2.3.1.2.3 Stack FE-6-HP Site

The tritium handling facility is located at the HP site (TA-33). A wide variety of experimental programs involving the use of tritium is carried out at the facility. Large amounts of tritium are released to the atmosphere from the facility stack (FE-6). A single fan-exhaust system is used to ventilate the facility and feeds to the FE-6 stack. More than 84 percent of the tritium discharged to the atmosphere at LANL is released from Stack FE-6.

The average air flow to the stack is about 200 m^3/min. The stack is 0.61 m in diameter, and the height above ground level is about 23 m.

The tritium handling facility is scheduled to be replaced in several years. Physical containment of the tritium during experimental activities is the principal method for controlling tritium emissions from the tritium handling facility stack. Work areas are ventilated to maintain the tritium concentration, due to leaks, below the concentration guide for controlled areas. A dryer system is used to remove tritiated water from the air flowing to the stack.

2.3.1.2.4 South Stack-Wing 3 - CMR

The Chemistry Metallurgy Research Building (CMR) located in TA-3 is a large multiwinged building in which a wide variety of research programs is carried out. Each wing of the facility is equipped with one or two stacks to handle the wing's air flow. Small amounts of radionuclides are discharged to the atmosphere from most of the building stacks. Wing 3 houses a variety of analytical chemistry groups which provide services for the entire laboratory. Approximately 55 percent of the plutonium released to the atmosphere at LANL in 1986 was discharged from the south stack of Wing 3 of the facility. No other radionuclides were detected in the stack air flow in 1986.

The air flow to the stack comes from a single fan and exhaust system (FE-19) serving a number of laboratories. The air flow to the stack is about 1,400 m^3/min. The stack has a diameter of about 1 m, and the height above ground level is about 17 m. The air flowing to the south stack of Wing 3 of the Chemistry Metallurgy Research Building is passed through a two-stage prefilter and a single-stage bag filter prior to discharge from the stack. It is estimated that the filter system removes 90 to 95 percent of the particulates.

2.3.1.2.5 Main Stack - Building 3-DP Site

Building 3 at the DP site (TA-21) is used for enriched uranium recovery operations. Small amounts of uranium are discharged to the atmosphere from several stacks used to ventilate the building. Uranium-235 released from the main stack of the building accounted for about 55 percent of the total uranium released to the atmosphere at LANL in 1986. The chemical form of the uranium released from the stack is unknown. No other radionuclides were detected in the air leaving the stack.

The main building stack serves to ventilate building work areas using a single fan-exhaust system (FE-1). Air flow to the stack is 480 m^3/min. The stack is about 1 m in diameter and about 15 m above ground level. There is no equipment in place to reduce emissions from the main stack of Building 3, except for local HEPA filters in gloveboxes.

2.3.1.2.6 Core Wing Stack Radiochemistry Site

The radiochemistry site in TA-48 is used for a variety of programs involving radioactive materials. Laboratory hoods, glove boxes, and "hot cells" are used to contain the radioactive materials. Small quantities of radioactive materials are released to the atmosphere from several stacks at the facility. About 87 percent of the mixed fission products (MFP) released to the atmosphere at LANL in 1986 were released from the Core Wing Stack, which is one of the stacks used to ventilate the radiochemistry facility.

Two fan-exhaust systems (FE-45 and FE-46) discharge into the Core Wing Stack. A number of glove boxes are serviced by the two fan-exhaust systems. Total air flow to the stack is about 1,400 m^3/min, with the air flow almost equally divided between the two fan-exhaust systems. The Core Wing Stack has a diameter of about 1.5 m and a height of approximately 21.3 m above ground level. The glove boxes which discharge to the two fan-exhaust systems serving the Core Wing Stack are provided with a single stage of HEPA filters.

2.3.2 Basis for the Dose and Risk Assessment

2.3.2.1 Source Terms and Release Point Characterization

The total airborne releases, in Ci/y, from all sources during 1986 are listed below in Table 2.3-1.

In modeling the site, all releases were assumed to be made from the LAMPF, since this is the major source of dose. The releases were assumed from a 30.5-m stack. Default particle sizes (1.00 Amad) and solubility classes (Class D for carbon-11, nitrogen-13, and oxygen-15) were assumed.

Table 2.3-1. Radionuclides released to air during 1986 from Los Alamos Scientific Laboratory.

Nuclide	Release Rate (Ci/y)
Ar-41	7.3E+2
C-11	1.8E+4
H-3	1.1E+4
I-131	3.8E-5
N-13	4.8E+3
O-14	2.6E+3
O-15	8.6E+4
P-32	7.0E-5
Pu-238	9.9E-5
Pu-239	1.1E-4
Sr-90	2.6E-3
U-235	7.1E-4
U-238	1.4E-4

2.3.2.2 Other Parameters Used in the Assessment

Meteorological data used in the assessment are from Santa Fe, New Mexico. The 0-80 km population distribution was produced using the computer code SECPOP and 1980 Census Bureau data. Nearby individuals were located 750 m from the assumed release point (Em87). Food consumption rates appropriate to an urban location were used.

2.3.3 Results of the Dose and Risk Assessment

The major contributors to exposure are oxygen-15 (57 percent), carbon-11 (29 percent), and nitrogen-13 (7 percent). The predominant exposure pathway is air immersion.

The results of the dose and risk assessment are presented in Tables 2.3-2 through 2.3-4. Table 2.3-2 presents the doses received by nearby individuals and the regional population. Doses to organs accounting for 10 percent or more of the risk are presented. Table 2.3-3 presents the estimated lifetime fatal cancer risk to nearby individuals with maximum exposure, as well as estimated deaths per year in the regional population. Table 2.3-4 presents the estimated distribution of fatal cancer risk to the regional population.

Table 2.3-2. Estimated radiation doses from the Los Alamos Laboratory.

Organ	Nearby Individuals (mrem/y)	Regional Population (person-rem/y)
Gonads	9.5E+0	1.0E+1
Remainder	7.4E+0	1.1E+1
Breast	8.9E+0	9.7E+0
Lungs	8.8E+0	1.1E+1
Red marrow	7.0E+0	9.2E+0

Table 2.3-3. Estimated fatal cancer risks from the Los Alamos Laboratory.

Nearby Individuals Lifetime Fatal Cancer Risk	Regional (0-80 km) Population Deaths/y
2E-4	4E-3

Table 2.3-4. Estimated distribution of the fatal cancer risk to the regional (0-80 km) population from the Los Alamos Scientific Laboratory.

Risk Interval	Number of Persons	Deaths/y
1E-1 to 1E+0	0	0
1E-2 to 1E-1	0	0
1E-3 to 1E-2	0	0
1E-4 to 1E-3	1	3E-6
1E-5 to 1E-4	2,500	9E-4
1E-6 to 1E-5	100,000	2E-3
< 1E-6	50,000	7E-4
Totals	160,000	4E-3

2.3.4 Supplementary Controls

2.3.4.1 LAMPF Main Stack

The results of the dose and risk assessment show that 98 percent of the dose is due to emissions of oxygen-15, carbon-11, and nitrogen-13, short-lived air activation products from the LAMPF Main Stack.

A permanent committee was formed at LANL several years ago to review LAMPF operations (Em87, Mo85). One objective of the committee is to evaluate potential methods for reducing releases of airborne radioactivity from LAMPF operations. One plan currently under consideration is to enclose one of the primary beam stop areas, which is a major producer of air activation products. The enclosed area would not be vented during accelerator operation. Venting would be done only after the accelerator shuts down and the short-lived radioisotopes have had a chance to decay. The overall effectiveness of the proposed modification for reducing airborne emissions from LAMPF has not been determined. If the plan is implemented, construction of the enclosure will start within two years (Mo86).

The large air flow to the LAMPF main stack (about 480 m^3/min) makes it very difficult to use any existing technology to remove the gaseous activation products from the air stream. The most realistic approach would be to provide additional holdup time to allow some decay of the short half-lived radionuclides, as indicated above. Extremely large air storage volumes would be required to reduce radionuclide releases significantly. For example, if an atmospheric pressure air storage system having a storage volume of 9,300 m^3 were applied to the air flowing to the LAMPF stack, the additional holdup time provided would be about 19.4 minutes. Table 2.3-5 presents the reductions in radionuclide emissions as a function of holdup time.

Table 2.3-5. Effect of holdup time on the release of air activation products from the proposed stack serving the LAMPF beam stop.

	Fraction of the Radionuclide Generated at the Beam Stop Released to the Atmosphere	
Radionuclide	Single Tank (20 min. additional holdup time)	Dual Tank (40 min. additional holdup time)
Oxygen-15	0.00108	1.18E-6
Carbon-11	0.505	0.255
Nitrogen-13	0.25	0.0625

As a result, total emissions from the stack would be reduced from about 109,000 Ci/y to about 5,000 Ci/y at the same level of programmatic activities.

The air storage tank would be constructed of carbon steel and located on a concrete pad adjacent to the LAMPF stack,

assuming adequate space is available. A tank with a storage volume of 9,300 m^3 would be 30 m in diameter by about 13.2 m high.

The estimated capital cost for an atmospheric pressure air storage system, with a storage volume of 9,300 m^3, would be about $1,600,000. The estimated operating costs would be about $90,000 per year. The capital cost of air storage systems of varying size would vary approximately as the eight-tenths power of the size ratio. Annual operating costs would be almost independent of the size ratio (Mo86).

2.3.4.2 Omega West Reactor Stack

The Omega West research reactor, located in TA-2, is a heterogeneous water-cooled tank-type reactor. The maximum power level is 8 MWth. The reactor is used for a wide variety of experimental programs. The reactor is under DOE jurisdiction and meets DOE standards for research reactors which are equivalent to NRC standards for research reactors.

Argon-41 is produced by neutron activation of the natural argon in air. Process air streams and part of the building ventilation exhaust are discharged to the atmosphere from the reactor stack, which is located about 300 m from the reactor. The total air flow to the stack is about 28.3 m^3/min. The stack is approximately 0.2 m in diameter, and its height is approximately 46 m above ground level. The stack is continuously monitored.

The argon-41 released from the reactor stack can be reduced by providing additional holdup time to allow the argon-41 to decay. An atmospheric pressure or pressurized air storage system could be used to provide the holdup time. The atmospheric pressure storage volumes required to obtain various reductions in the argon-41 emissions at a normal airflow of 28.3 m^3/min are given in Table 2.3-5. The use of a pressurized air storage system would reduce the storage volume required for a given decontamination factor (DF) but would probably increase the overall cost of the system.

2.3.4.3 Stack FE-6-HP Site

The tritium handling facility is located at the HP site (TA-33). A wide variety of experimental programs involving the use of tritium is carried out at the facility. Large amounts of tritium are released to the atmosphere from the facility stack (FE-6). A single fan-exhaust system is used to ventilate the facility and feeds to the FE-6 stack. More than 84 percent of the tritium discharged to the atmosphere at LANL is released from Stack FE-6.

The average air flow to the stack is about 200 m^3/min. The stack is 0.61 m in diameter, and the height above ground level is about 23 m.

The tritium handling facility is scheduled to be replaced in several years.

The chemical form of the tritium is unknown, but since any tritiated water should be removed by the dryer, the tritium is probably present as molecular hydrogen.

The large volume of air flowing to Stack FE-6 and the very low concentration of tritium in the air make effective reduction of the tritium released from the stack both difficult and costly. In addition, because the tritium handling facility is to be replaced in a few years, it is difficult to justify large expenditures for additional emission control technology.

Assuming the tritium is present in the air stream primarily as molecular hydrogen, adequate removal of the tritium from the air would require its conversion to water. A drying step would then be required to remove the tritiated water from the air prior to discharge. Subsequent recovery of the tritiated water from the dryer and its final disposal would present additional problems. A risk analysis would have to be carried out to determine if disposal of the tritiated water would present less of a risk then release of the tritium, as molecular hydrogen, to the atmosphere.

If removal of tritium from the air flowing to Stack FE-6 becomes necessary, a recovery system similar to the emergency tritium cleanup system (ETC) which is used at the Tritium Systems Test Assembly (TSTA) at LANL could probably be used. The ETC system is designed to process air at the rate of about 39 m^3/min. Therefore, a similar system for Stack FE-6 would have to be designed for air flow about five times as large (200 m^3/min). The ETC system was not intended for continuous operations, but only for emergency use. However, the system could probably be designed for continuous use.

2.3.4.4 South Stack-Wing 3 - CMR

The Chemistry Metallurgy Research (CMR) Building located in TA-3 is a large multiwinged building, housing a wide variety of research programs. Each wing of the facility is equipped with one or two stacks to handle the wing air flow. Small amounts of radionuclides are discharged to the atmosphere from most of the building stacks. Wing 3 houses a variety of analytical chemistry groups which provide services for the entire laboratory. The air flow to the stack comes from a single fan and exhaust system (FE-19) serving a number of laboratories. The air flow to the stack is about 1,400 m^3/min. The stack has a diameter of about 1 m, and the height above ground level is about 17 m.

The chemical form and isotopic composition of the plutonium discharged are unknown.

Because the amount of plutonium released from the stack in question and its effect on the environment are already very small, additional equipment to reduce the plutonium release probably would result in only slight decreases in the total risks due to this facility. If additional reductions are necessary, however, they could be attained by installing a HEPA filter system in addition to or in place of the existing bag filter system. A bank of at least 48 HEPA filters, measuring 61 cm x 61 cm x 30 cm would be needed to handle the air flow. The HEPA filter system would provide at least a 99 percent reduction in the plutonium release from the stack.

2.3.4.5 Main Stack - Building 3-DP Site

Building 3 at the DP site (TA-21) is used for enriched uranium recovery operations. Small amounts of uranium are discharged to the atmosphere from several stacks used to ventilate the building. Uranium-235 released from the main stack of the building accounted for about 34 percent of the total uranium released to the atmosphere at LANL in 1986. The chemical form of the uranium released from the stack is unknown. No other radionuclides were detected in the air leaving the stack.

The main building stack serves to ventilate building work areas using a single fan-exhaust system (FE-1). Air flow to the stack is 480 m^3/min. The stack is about 1 m in diameter, and the height of the stack is about 15 m above ground level.

The amount of uranium released from the main stack of Building 3 is already very small, and its effect on the environment is minimal. If reductions become necessary, however, a filter system could probably be installed. A HEPA filter system would be preferred. A bank of at least 18 HEPA filters measuring 61 cm x 61 cm x 30 cm would be required to handle the air flow to the stack.

Installation of a HEPA filter system would provide at least a 99.9 percent reduction in the uranium release from the stack. The system would consist of three modules, each rated at 250 m^3/min, with two modules in operation and one module in standby. Each module would consist of nine HEPA filters, two dampers, and one 300 m^3/min blower.

2.4 HANFORD RESERVATION

The Hanford Reservation was established in 1943 as a plutonium production facility for nuclear armaments. Information used to evaluate the facility was obtained from DOE and Hanford reports (Mo84, PNL87). Plutonium production has decreased, and other programs have filled the gap, such as management and storage of radioactive wastes, reactor operations, fuel

fabrication, energy research and development, and biophysical and biomedical research. The reservation, which is located 270 km south of Seattle, Washington, is separated into four areas, which are designated the 100, 200, 300, and 400 Areas. The activities of each area are described briefly.

2.4.1.1 100 Area

The 100 Area contains the nine plutonium production reactors for which the site was originally developed. Eight of these reactors are currently shut-down. Operating facilities during 1986 include the N-Reactor and the 1706 Laboratory, which provides support services for the reactor. N-Reactor has subsequently been shut-down pending the resolution of safety concerns.

2.4.1.2 200 Area

Activities conducted in the 200 Area include fuel processing, nuclear waste treatment and storage, equipment decontamination, and research. Plutonium reclamation from spent fuel is performed at the PUREX Plant in this area.

2.4.1.3 300 Area

The major facilities in the 300 Area are the Hanford Engineering Development Laboratory, the fuel fabrication facility, and the Life Sciences Laboratory. The Hanford Engineering Development Laboratory, the largest operation in this area, supports all activities of the development program for the fast breeder reactor. Life science research in this area includes plutonium inhalation studies and other programs investigating the physiological effects of radioactive materials.

2.4.1.4 400 Area

The only facility currently in operation in the 400 Area is the Fast Flux Test Facility. When the Fuel Materials Examination Facility currently under construction is completed, the 400 Area will be the center of the Hanford breeder reactor research program.

2.4.2 Major Release Points and Existing Emission Control Technology

2.4.2.1 Stack 116-N Serving the 105-N Reactor Building

Argon-41, which constitutes the primary airborne radioactive emission from N-Reactor, is produced from the leakage of air into the reactor system and subsequent activation of the stable argon in the air. Noble gases and volatile fission products, such as xenon-133 and iodine-131, come from leaks in fuel element claddings. Nonvolatile particulate fission and activation

products, such as cobalt-60, europium-154, and molybdenum-99, become airborne as a result of the primary coolant contacting exposed surfaces, then drying and becoming suspended in air currents.

The ventilation systems in 105-N are separated into five zones based on their potential for contamination with airborne radioactive material. The 116-N stack is the main discharge point for airborne radioactive material from N-Reactor. Immediately preceding the 116-N stack is the 117-N filter and diversion facility through which the exhaust air is routed prior to release to the stack. The stack exhausts to the atmosphere 61 m above ground level.

The 117-N facility contains four separate air filtration cells. The air from Zones I, II, and III of the 105-N building enters through three separate ducts. Air from Zone I passes through two filtration cells, air from Zone II passes through a third filtration cell, and air from Zone III normally bypasses the filter cells as it is routed through the facility. In the event of an emergency, however, Zone III exhaust can be combined with Zone II exhaust to provide filtration for Zone III exhaust. The fourth filtration cell is on standby for emergency backup.

The first, second, and fourth filtration cells are composed of a series of three filter bank stages. The first stage is an aluminum mesh screen used as a moisture separator to protect the remaining filters in the event of entrained moisture in the air stream. The second stage is a high-efficiency particulate air (HEPA) filter. Minimum efficiency for removal of particulate matter larger than 0.3 microns is 99.97 percent. These filters are routinely tested for efficiency. The third stage contains granular activated charcoal which removes 95 percent of the inorganic halogen gases in the air stream.

The third filtration cell contains two stages, a HEPA filter and an activated charcoal absorber.

Zones IV and V serve offices, administration areas, and the reactor control room. Ventilation air from these areas is exhausted through roof exhausters without treatment.

2.4.2.2 PUREX Main Stack No. 291-A-1

The four sources of gases that exhaust through the 61-m-high 291-A-1 main stack of the Hanford PUREX facility are: the declad and dissolver off-gas system, the process off-gas system, the plutonium oxide conversion facility off-gas system, and the canyon ventilation system.

2.4.2.2.1 Declad and Dissolver Off-Gas System

The PUREX facility has the capability to process irradiated fuel to separate and recover plutonium, uranium, and neptunium.

In the head-end of the process, the cladding is chemically removed from the fuel elements and the fuel is then dissolved in the same vessel. The decladding and dissolving are accomplished in three dissolver vessels. The dissolvers have parallel systems for treatment of the declad and dissolver off-gases.

The declad off-gases first go through a downdraft condenser tower that condenses moisture and removes part of the nitrogen oxides as nitric acid. The gases pass through an ammonia scrubber and then through a steam heater and an electric heater. The gases are heated to 196°C before passing into the silver reactor.

The decontamination factor (DF) for the silver reactor averages 100. The cell B silver reactor has a 2.44-m deep packing bed of 1.3 cm ceramic saddles, while the cells A and C silver reactors have a 0.88-m deep bed of 1.3-cm saddles on top of a 0.30-m deep bed of 2.5-cm saddles. The saddles are coated with silver nitrate. Iodine-129 and iodine-131 are removed in the silver reactor. When the efficiency falls, the silver reactor bed is regenerated with fresh silver nitrate solution that is then baked on the packing. When a reactor becomes plugged, it is replaced and sent to a low-level waste burial ground.

From the silver reactor, the declad gases pass through two deep-bed glass fiber filters in series. The gases are then exhausted through the main stack, 291-A-1.

During the dissolution step, the gases follow a similar path. The ammonia scrubber does not operate during dissolution. The gases exiting the second glass fiber filter are routed to the 293-A Building in which two acid absorbers in series remove 90 percent of the remaining iodine and 90-92 percent of the remaining nitrogen oxides. The gases are then sent to the main stack, 291-A-1.

Krypton-85 is a major radionuclide released during the declad and dissolving processes. There is no cleanup of krypton-85 at PUREX.

2.4.2.2.2 Process Off-Gas System

The PUREX process produces off-gases from condensers and other process equipment. These are combined and routed through the process off-gas cleanup system.

The gases go through a condenser to remove the condensable vapors. Then the noncondensable gases are heated in a steam heater to 160°C and pass through a silver reactor that removes radioactive iodine that remained in solution during the fuel dissolving process and that evolves during processing steps. This silver reactor has a very low efficiency. From the silver reactor, the gases pass through a deep-bed glass fiber filter and from there to the ventilation system No. 1 air tunnel.

2.4.2.2.3 Plutonium Oxide Conversion Facility Off-Gas System

While the PUREX plant has been on standby, a plutonium oxide facility has been added to the plant.

Off-gases from the plutonium nitrate storage vessels and the prereduction tank pass through a heater and then through two stages of HEPA filtration. There is a combined flow of about 1,583 l/min at 60°C. Blowers deliver these gases to the ventilation system No. 1 air tunnel.

Off-gases from the calciner pass through a porous stainless steel filter at a flow rate of about 186 l/min at 157°C to remove plutonium oxide particles. These gases, along with the off-gases from the filtrate concentrator and the vessel vent gases from the oxide rework facility, are fed to a scrubber to remove nitric acid. The off-gases from the vacuum header pass through a vacuum tank and are combined with the scrubber off-gases. The combined gases then pass through two vacuum dropout tanks in series to remove entrained liquids. The combined gas flow of about 400 l/min then goes through a heater and two stages of HEPA filtration in series. A vacuum pump delivers the gases to the blowers that exhaust to the ventilation system No. 1 air tunnel.

2.4.2.2.4 Canyon Ventilation System

Ventilation system No. 1 provides ventilation air for the process cells in the PUREX canyon. Added to this air are the gases from the process off-gas cleanup system and from the plutonium oxide conversion facility off-gas treatment system.

The combined gases are exhausted through filters at a flow rate of 3,570 m^3/min. Two glass fiber filters and one HEPA filter are installed in parallel. Each unit is designed to handle the full canyon ventilation air flow. Unit one, which was installed in 1955, now has marginal capacity because of the accumulation of solids. Unit two is run in parallel with unit one. Unit three is on standby. The filters are installed underground. When they are no longer usable, they will be sealed and left in place. Recent tests have shown the two fiberglass filters to have efficiencies greater than 99.95 percent for 0.3 micron particles. Unit three is designed to remove 99.97 percent of the 0.3 micron particles from the ventilation air. Fans deliver the filtered gases to the PUREX main stack, 291-A-1.

2.4.2.3 Combined Exhaust, Buildings 405, 4621E, 4717; Building 491-S, and Building 4717

Radioactive gases generated in the Fast Flux Test Facility (FFTF) are a result of neutron activation of the reactor cover gas or are released from the fuel through defective fuel cladding. These gases are processed through the Radioactive

Argon Processing System (RAPS) and released to the atmosphere through the combined exhaust. There are about 200-280 l/min of gases from this source. Effluent from cells and spaces subject to potential contamination is processed through the Cell Atmosphere Processing System (CAPS) before release through the combined exhaust. The CAPS contributes about 1,700-2,000 l/min to the combined exhaust. Other contributions to the combined exhaust are about 100 m^3/min from the normal heating and ventilating system and about 570 m^3/min from the containment heating and ventilating system.

Gases from the fission gas monitor and from the argon blower and valve cell exhaust go through the 491-S Building directly to the atmosphere without treatment. Should the monitors on the inlet to Building 491-S show the presence of radionuclides, the gases can be routed through the CAPS. If the Building 491-S outlet monitors show contamination, a routing through HEPA filters is available. The Building 4717 lower area heating and ventilating system exhausts directly to the atmosphere. Should the radiation monitor detect contamination, the blowers would be shut down until the situation could be evaluated.

2.4.2.4 Radioactive Argon Processing System (RAPS)

Inputs to the RAPS consist of about 170-200 l/min of argon reactor cover gas and about 28-57 l/min bleed from the argon atmosphere hot cell. The compressors, one online and one on standby, draw the gases through a vacuum tank and filters which remove moisture and oils. The gases then pass to a surge and delay tank equipped with baffles, which delays their passage for about 30 hours to allow decay of argon-41. From the surge and delay tank, the gases pass to the cold box, which operates at cryogenic temperatures. Heat exchangers using liquid nitrogen cool four charcoal-delay beds that operate in series. The adsorption of the gases by the charcoal beds provides about 3.25 days of delay for krypton and about 284 days of delay for xenon. This allows for decay of the short-lived radioisotopes. If there has been no failed fuel cladding, the gases would then be routed to the combined exhaust or to the CAPS. If there has been some failed fuel cladding, longer-lived noble gases could be present. In this case, the gases from the charcoal-delay beds would be routed to a liquid nitrogen-cooled fractional distillation column. Here, the liquid portion would contain the longer-lived noble gases. The liquid would be warmed and the noble gases sent to a noble gas storage vessel. The gas portion from the fractional distillation column would be routed to the combined exhaust or to the CAPS.

2.4.2.5 Cell Atmosphere Processing System (CAPS)

Inputs to the CAPS consist of: (1) about 1,415 l/min of discharge from nitrogen atmosphere cells, (2) about 1-2 l/hr from the gas chromatograph that samples the argon atmosphere reactor cover gas, (3) about 425-570 l of contaminated argon about once a

week from the gas tag sample trap, and (4) effluent from the RAPS, if radiation monitors detect radioactivity above 1E-3 microcuries per cubic centimeter.

As with the RAPS, the gases are drawn into a vacuum tank and through filters to remove moisture and oils by two compressors, one online and one on standby, and thence into a surge and delay tank for decay of argon-41. The CAPS input flow normally has a very low radioactivity level (<<1E-7 uCi/cc). In normal operation, the gases from the surge and delay tank are then routed to the combined exhaust. If radiation monitors detect radiation, the gases are routed to the cold box. Two drying units dry the gas to a dewpoint of -68°C or less. The liquid from the drying unit may contain some tritium and is sent to the liquid waste system. Two liquid-nitrogen-cooled charcoal-delay beds in series provide decay time for short-lived radionuclides. If the gases exiting the charcoal-delay beds have a radioactivity of less than 5E-3 uCi/cm^3, they are routed to the combined exhaust. If the radioactivity exceeds this limit, the gases are routed back to the CAPS vacuum tank for another pass through the CAPS.

2.4.3 Basis for the Dose and Risk Assessment

2.4.3.1 Source Terms and Release Point Characterization

The total airborne releases, in Ci/y, from all sources during 1986 are listed in Table 2.4-1.

In modeling the site, all releases were assumed to be made from the 200 Area, since this is the major source of dose, and the nearest individual at risk is assumed to be 15,000 m from the source (PNL87). The releases were assumed from a 10-m stack. Default particle sizes (1.00 AMAD for plutonium-238) and solubility classes (Class Y for plutonium-238) were assumed.

2.4.3.2 Other Parameters Used in the Assessment

Meteorological data used in the assessment are from Moses Lake/Grant, Washington. The 0-80 km population distribution was produced using the computer code SECPOP and 1980 Census Bureau data. Nearby individuals were located 15,000 m from the assumed release point.Food consumption rates appropriate to a rural location were used.

2.4.3 Results of the Dose and Risk Assessment

The major contributors to exposure are argon-41 (61 percent) and plutonium-238 (33 percent). The predominant exposure pathways are inhalation for uranium-238 and air immersion for argon-41.

Table 2.4-1. Radionuclides released to air during 1986 from the Hanford Reservation.

Nuclide	Release Rate (Ci/y)
Am-241	5.3E-4
Ar-41	1.3E+5
Ce-144	2.6E-3
Co-60	1.1E-2
Cs-137	8.0E-3
Cs-138	1.9E+3
H-3	8.7E+1
I-129	5.3E-1
I-131	5.6E-1
I-132	2.6E-1
I-133	2.3E+0
I-135	3.5E-1
Kr-85	5.3E+5
Kr-85m	3.3E+2
Kr-87	8.5E+2
Kr-88	3.6E+2
La-140	3.4E-2
Mo-99	9.6E-2
Nb-95	3.5E-3
Pb-212	1.8E-1
Pm-147	1.2E-2
Pu-238	8.9E-2
Pu-239	3.2E-3
Pu-241	1.4E-2
Rb-88	3.6E+2
Ru-106	4.5E-1
Sn-113	1.8E-1
Sr-90	1.2E-3
Tc-99	2.0E-4
U-234	6.8E-5
U-235	8.4E-6
U-236	5.4E-7
U-238	4.2E-5
Xe-133	6.7E+1
Xe-135	1.3E+3
Zr-95	4.0E-3

The results of the dose and risk assessment are presented in Tables 2.4-2 through 2.4-4. Table 2.4-2 presents the doses received by nearby individuals and the regional population. Doses to organs accounting for 10 percent or more of the risk are presented. Table 2.4-5 presents the estimated lifetime fatal cancer risk to nearby individuals with maximum exposure, as well as estimated deaths per year in the regional population. Table 2.4-4 presents the estimated distribution of fatal cancer risk to the regional population.

Table 2.4-2. Estimated radiation dose rates from the Hanford Reservation.

Organ	Nearby Individuals (mrem/y)	Regional Population (person-rem/y)
Lungs	2.8E+0	5.6E+1
Remainder	1.0E+0	1.7E+1
Gonads	1.1E+0	1.5E+1
Endosteum	6.3E+0	1.7E+2
Red marrow	1.2E+0	2.3E+1
Breast	9.4E-1	1.2E+1

Table 2.4-3. Estimated fatal cancer risks from the Hanford Reservation.

Nearby Individuals Lifetime Fatal Cancer Risk	Regional (0-80 km) Population Deaths/y
3E-5	6E-3

Table 2.4-4. Estimated distribution of the fatal cancer risk to the regional (0-80 km) population from the Hanford Reservation.

Risk Interval	Number of Persons	Deaths/y
1E-1 - 1E+0	0	0
1E-2 - 1E-1	0	0
1E-3 - 1E-2	0	0
1E-4 - 1E-3	0	0
1E-5 - 1E-4	5,200	1E-3
1E-6 - 1E-5	140,000	4E-3
< 1E-6	210,000	1E-3
Totals	350,000	6E-3

2.4.5 Supplementary Controls

The N-Reactor shutdown in 1987 has reduced emissions of argon-41 and plutonium-238 sufficiently to lower the estimated maximum exposure below 1 mrem/y. Therefore, additional emission controls for airborne radionuclides are not discussed.

2.5 OAK RIDGE RESERVATION

2.5.1 Description and Existing Controls

The Oak Ridge Reservation (ORR), located in eastern Tennessee, occupies approximately 15,000 ha in a valley between the Cumberland and southern Appalachian mountain ranges. The ORR lies just southwest of the city of Oak Ridge and about 24 km west of Knoxville, Tennessee. The reservation is bounded on the northeast, southeast, and southwest by the Clinch River.

2.5.1.1 Site Description

The major facilities at the ORR are the Y-12 plant, the Oak Ridge National Laboratory (ORNL), and the Oak Ridge Gaseous Diffusion Plant (ORGDP). In addition to these major facilities, the Oak Ridge Associated Universities and the Comparative Animal Research Laboratory are also located at the site.

The Y-12 plant, located adjacent to the city of Oak Ridge, is a major nuclear weapons production facility, processing enriched uranium. Its major missions include fabricating nuclear weapons components, processing source and special nuclear material, and providing support to the weapons design laboratories. While the actual processes employed at the Y-12 plant are classified, the activities associated with these missions include production of lithium compounds, recovery of enriched uranium from scrap materials, and fabrication of uranium and other materials into finished parts and assemblies. Fabrication operations include vacuum casting, arc melting, powder compaction, rolling, forming, heat treating, and machining.

The ORNL is a large multipurpose research laboratory where basic and applied research in all areas relating to energy is conducted. The ORNL facilities include nuclear reactors, chemical pilot plants, research laboratories, and radioisotope production laboratories.

The significant airborne radioactive emissions from the ORNL are from the Central Radioactive Gas Disposal Facility (CRGDF) and the Tritium Target Fabrication Building. The CRGDF is equipped with charcoal filters for radioiodines and HEPA filters for particulate emissions. There are no controls for the noble gases krypton and xenon or for tritium. The Tritium Target Fabrication Building also releases tritium without effluent control.

Until the summer of 1985, the ORGDP's primary mission was to provide enriched uranium for use in nuclear reactors. The ORGDP uses the gaseous diffusion process. The facility was placed in "ready standby" in August 1985. Since that time, the decision has been made to shut down permanently the enrichment cascade. ORGDP is also involved in developing and demonstrating more

energy-efficient and cost-effective methods of enriching uranium, such as the gas centrifuge process and the atomic vapor laser isotopic separation (AVLIS) system. However, the gas centrifuge process was shut down in 1985, and the work on AVLIS has been significantly reduced.

2.5.1.2 Major Release Points and Existing Emission Control Technology

There are approximately 350 process exhaust stacks at the Y-12 plant, of which approximately 85 serve operations with the potential to release uranium to the atmosphere. Although actual emission controls are classified, it is known that the majority of the stacks serving uranium operations are equipped with particulate control devices such as HEPA and fabric filters.

The purge cascade was the largest source of airborne radioactive emissions at the ORGDP. Effluents from the purge cascade were passed through sodium fluoride traps, alumina traps, and potassium hydroxide (KOH) scrubbers.

2.5.2 Basis for the Dose and Risk Assessment

2.5.2.1 Source Terms and Release Point Characterization

The airborne emissions from all facilities at ORR are summarized in Table 2.5-1. These emissions data were obtained from the DOE's Effluent Information System and the Annual Environmental Monitoring Report for 1986 (Or87a, Or87c).

In modeling the site, all releases were assumed to be made from the Y-12 plant, since this is the major source of uranium. Data on the actual stacks at the Y-12 Plant are classified. Therefore, the releases were assumed from a 10-m stack, with a flow of 200 cfm (Mo86).

Default particle sizes (1.00 AMAD) were assumed. The uranium-234 was assumed to be one-half solubility class W and one-half solubility class Y.

2.5.2.2 Other Parameters Used in the Assessment

Meteorological data used in the assessment are from Knoxville, Tennessee. The 0-80 km population distribution was produced using the computer code SECPOP and 1980 Census Bureau data. Nearby individuals were located in the city of Oak Ridge, 750 m from the assumed release point. Food consumption rates appropriate to a rural location were used.

Table 2.5-1. Radionuclides released to air from Oak Ridge Reservation during 1986.

Nuclide	1986 Emissions (Curies/year) Y-12	ORNL	ORGDP	Other	Total
C-14				1.0E-4	1.0E-4
Cu-64				2.0E-6	2.0E-6
Ga-67				3.0E-6	3.0E-6
H-3		3.1E+4		4.0E-3	3.1E+4
I-125				1.5E-5	1.5E-5
I-131		3.6E-2		1.3E-4	3.6E-2
Kr-85		1.1E+4			1.1E+4
Pa-234M			3.7E-4		3.7E-4
Tc-99	1.3E-2		1.2E-1		1.3E-1
Tc-99M				3.0E-6	3.0E-6
Th-234			3.7E-4		3.7E-4
Tl-201				5.0E-6	5.0E-6
U-234	7.0E-2		7.4E-3		7.7E-2
U-234	7.7E-2				7.7E-2
U-235	6.4E-3				6.4E-3
U-236			8.0E-6		8.0E-6
U-238	2.8E-2		3.6E-4		2.8E-2
Xe-133		5.2E+4			5.2E+4
Y-90				2.0E-5	2.0E-5

2.5.3 Results of the Dose and Risk Assessment

The major contributors to exposure are uranium-234 (40 percent), tritium (35 percent), and uranium-238 (13 percent). The predominant exposure pathway is inhalation for uranium-234 and uranium-238, and ingestion for tritium.

The results of the dose and risk assessment are presented in Tables 2.5-2 through 2.5-4. Table 2.5-2 presents the doses received by nearby individuals and the regional population. Doses to organs accounting for 10 percent or more of the risk are presented. Table 2.5-3 presents the estimated lifetime fatal cancer risk to nearby individuals with maximum exposure, as well as estimated deaths per year in the regional population. Table 2.5-4 presents the estimated distribution of fatal cancer risk to the regional population.

Table 2.5-2. Estimated radiation dose rates from the Oak Ridge National Laboratory.

Organ	Nearby Individuals (mrem/y)	Regional Population (person-rem/y)
Lungs	2.2E+1	4.3E+2
Remainder	2.0E+0	7.8E+1

Table 2.5-3. Estimated fatal cancer risks from the Oak Ridge National Laboratory.

Nearby Individuals Lifetime Fatal Cancer Risk	Regional (0-80 km) Population Deaths/year
8E-5	3E-2

Table 2.5-4. Estimated distribution of the fatal cancer risk to the regional (0-80 km) population from Oak Ridge National Laboratory.

Risk Interval	Number of Persons	Deaths/year
1E-1 - 1E+0	0	0
1E-2 - 1E-1	0	0
1E-3 - 1E-2	0	0
1E-4 - 1E-3	0	0
1E-5 - 1E-4	28,000	8E-3
1E-6 - 1E-5	760,000	3E-2
< 1E-6	60,000	8E-4
Totals	850,000	3E-2

2.5.4 Supplementary Controls

The emission control technology (ECT) currently used to reduce airborne radioactive emissions at facilities in the major Oak Ridge areas was described in Section 2.5.1. Potential additional emission control technologies are described in the following sections (Mo86).

2.5.4.1 Additional Emission Control Technology for the ORNL Central Radioactive Gas Disposal Facility

The major portion of the radiological hazard from the gas disposal facility is due to the emission of tritium. Practical control technology exists for removal of these materials from low flow rate air streams only. Because of the high rate of emission (64 m^3/sec) from the stack of this facility, additional control technology must be implemented before the individual source stream is diluted with ventilation air or other gas streams.

Much of the tritium emission is in the form of tritiated water. This portion can be removed by passing the source stream through a dryer containing molecular sieve materials for water removal and then regenerating the adsorber material with heat. A pair of such dryers, operated alternately, will provide for the continuous removal of tritiated water from the source. Table 2.5-5 presents the expected emission rate for tritium at the CRGDF if this additional control technology is implemented.

Table 2.5-5. Anticipated new emission rate for tritium at CRGDF.

Present Emission Rate (Ci/y)	Postulated ECT Removal Efficiency	New Emission Rate (Ci/y)
3.12E+4	90%	3.12E+3

The cost of an emission control system for the removal of tritiated water is estimated at $1.66 million. This includes $1 million for construction, $0.2 million for engineering, and a $0.46 million contingency. These cost estimates are highly dependent upon the ease of incorporating the potential controls into the existing gas handling system. It is possible that the existing gas handling system would have to be completely replaced to accommodate more controls.

2.5.4.2 Additional Emission Control Technology for the ORNL Tritium Target Fabrication Building

Tritiated water can be removed from the gaseous exhaust by passing the exhaust air stream through a dryer containing molecular sieve materials for water removal and then regenerating the adsorber material by the application of heat. A pair of such driers, operated alternately, would provide for the continuous drying of the exhaust and the collection of tritiated water for storage or further processing.

Analytical information concerning the gases present in the stack exhaust indicates that only about 1 percent of the tritium is in the form of tritiated water. At this time, it is not

practical to remove tritium in the form of hydrogen gas from the large gaseous stream flow emanating from the Tritium Target Fabrication Building.

It is postulated that over 90 percent of the tritiated water would be collected by the application of the additional technology; however, since the tritiated water represents only a small portion of the total tritium from this facility, the present emissions (1.2×10^3 Ci/y) would not be significantly reduced.

The cost of an emission control system specifically designed for the removal of tritiated water is estimated at $1.66 million. This includes $1 million for construction, $0.2 million for engineering, and a $0.46 million contingency.

2.5.4.3 Additional Emission Control Technology for the Y-12 Plant (Uranium Product Recovery)

There are three sources of emissions from uranium product recovery. The major source is the West Head House, Building 9212. The emission controls described here apply to this facility.

Installation of an additional stage of HEPA filters would reduce the amount of particulate emission and uranium-234 and uranium-238 that bypasses the present ECT system, if the present ductwork can be adapted or expanded to allow incorporation of more HEPA filters downstream of the existing filter system.

HEPA filters are estimated to remove at least 99.95 percent of particulate materials in a single pass. It has been shown, however, that uncollected materials have a lower collection efficiency when passed through a second HEPA filter stage. Collection efficiency estimates for such a second stage may vary due to the size distribution of the original particulates. It is postulated that a second HEPA filter installed in series will remove 99 percent of the remaining particulates and reduce the amount of uranium-234 from 0.154 Ci/y to 0.093 Ci/y, and reduce the amount of uranium-238 from 2.8E-2 Ci/y to 3.0E-3 Ci/y.

The cost of the control devices presently installed in the uranium product recovery facility is $55,000. The estimated cost for installation of backup HEPA filtration within the existing system is an additional $20,000. The present annual operating cost is $14,640. Based upon the assumption that the air capacityof the system can be maintained by the existing fan system, additional power and HEPA changeout requirements would increase the operating cost about 20 percent.

If significant structural additions or modifications are necessary for proper operation and maintenance of the expanded air control system, then significant cost increases can be anticipated. In addition to the HEPA filter cost, modifications

that include ductwork, blowers, dampers, instrumentation, and electrical work would increase the cost to about $455,000. Engineering costs of about $115,000 and a 35 percent contingency would raise the total project cost to over $800,000. Major structural additions will further increase the cost. Operating costs are expected to double with the implementation of this modified system.

2.5.4.4 Additional Emission Control Technology for the Y-12 Plant (Uranium Product Preparation)

Replacing the existing scrubber with a high-energy venturi scrubber and adding a backup stage of HEPA filtration would reduce the emission of uranium-234 from this facility, if the present ductwork can be modified or expanded to allow incorporation of these changes.

Based upon the arguments presented in Section 2.5.4.3, about 99 percent of the particulate emission would be removed by the addition of a second HEPA filter stage. In addition, the use of a high-energy venturi scrubber would improve the collection efficiency of the scrubber system by 20 percent and would provide higher efficiency (98-99 percent) for removal of particulates below 1 micron. By implementing the additional ECT, the emission of uranium-234 would be reduced from 2.98E-2 Ci/y to less than 2.38E-4 Ci/y.

The cost of the control devices already installed in the uranium product preparations C-I wing building is $46,300. The estimated additional cost for adding a high-efficiency scrubber, including demisters, is $15,000 ($11,000 capital plus $4,000 installation). The estimated additional cost for backup HEPA filtration is $9,000. These estimates are based upon the assumption that the existing fan system is capable of maintaining the necessary pressures and flows with the added ECT.

The present annual operating cost of $6,880 is expected to increase 30 percent due to the power necessary to maintain high differential pressures in the venturi and provide flow through both HEPA filters.

If significant structural additions or modifications and other equipment such as special nitric acid scrubbers are necessary for proper operation and maintenance of the expanded air control system, then significant cost increases can be anticipated. In addition to the HEPA filter cost, modifications that include ductwork, blowers, dampers, instrumentation, and electrical work would increase the cost to about $200,000. Engineering costs of about $80,000 and a 35 percent contingency would raise the total project cost to about $400,000. Major structural additions would further increase the cost. Operating costs are expected to double with the implementation of this modified system.

2.5.4.5 Additional Emission Control Technology for the Y-12 Plant (Uranium Fuel Element Fabrication)

The fabrication process is located in the C Wing of Building 9212. Installation of HEPA filters would significantly reduce the amount of particulate uranium-234 emitted from this facility, if the present ventilation system can be modified or expanded to allow installation of HEPA filters downstream of the roughing filters.

HEPA filters collect almost 100 percent of the airborne particulate materials from airstreams containing typical size distributions of suspended materials. It is estimated that 99.95 percent of the materials that pass the roughing filters will be removed by a single pass through HEPA filtration. Based upon this assumption, the installation of HEPA filters would reduce the annual emission of uranium-234 from 1.73E-2 Ci to less than 8.7E-6 Ci.

The uranium fuel element fabrication facility is now served by a large ventilation system which exhausts air at the rate of 23.6 m^3/sec. A similarly sized system which includes the addition of HEPA filters is installed at the Y-12 plant uranium denitrator. The difference in cost between these facilities is $41,000, which is postulated as the cost to add HEPA filters to the fabrication facility. This is based upon the assumption that the air capacity of the system can be maintained by the existing fan system. The cost of additional power requirements and the cost of HEPA filter replacement will double operating costs to about $50,000 per year.

If significant structural additions or modifications such as air coolers are necessary for proper operation and maintenance of the expanded air control system, then significant cost increases can be anticipated. In addition to the HEPA filter cost, modifications that include ductwork, blowers, dampers, instrumentation, and electrical work would increase the costs to about $825,000. Engineering costs of about $200,000 and a 35 percent contingency would raise the total project cost to $1,450,000. Major structural additions would further increase the cost. Operating costs are expected to double with the implementation of this modified system.

2.5.4.6 Additional Emission Control Technology for the Oak Ridge Gaseous Diffusion Plant (Purge Cascade)

The Purge Cascade is part of the Oak Ridge Gaseous Diffusion Plant K-27 process area. All diffusion plant process buildings are three-story, steel frame with 6-mm transite side panels (preformed concrete). The Purge Cascade is intended to separate light gases from UF6 and vent them to the atmosphere through the emission control devices. Emissions from this building represent the largest hypothetical risk from the Oak Ridge Gaseous Diffusion Plant.

Radioactive emissions from the ORGDP Purge Cascade consist mainly of gaseous and particulate uranium and technetium fluorides that pass through existing abatement equipment. A new, low-energy venturi scrubber is planned for installation downstream of the existing spray scrubber to reduce mist carry-over and thus help mitigate equipment corrosion problems. This new scrubber should also reduce airborne emissions somewhat by removing more airborne particulate and droplet materials; however, quantification of the scrubbing action is not precise. It is dependent upon the gaseous solubility and upon the effectiveness of the mixing and impinging action. Addition of this device is estimated to remove about 50 percent of the remaining radioactive emissions.

The cost of the emission control devices now installed at the Purge Cascade is $1.25 million. The estimated additional cost for purchase of a low-energy venturi is $13,000. The added annual operating cost for this installation is estimated to be minor ($1,300) compared to the present annual operating cost of $300,000. Installation costs, which are sensitive to the amount of modification necessary to incorporate the added device, were not estimated.

Table 2.5-6. Summary of capital and operating costs for supplementary controls at the Oak Ridge Reservation.

Facility	Plant	Nuclide	Control Technology	Capital Cost($K)	Operating Cost($K)
ORNL	CRGDF	H-3	Tritiated water/ sieve dryer system	$1,660	$ 0
Y-12	U Prod. Recovery	U-234 U-238	Additional stage HEPA filters and high-energy venturi scrubbers	$800	$29
Y-12	U Prod. Prepara-tion	U-234 U-238	Additional stage HEPA filters and high-energy venturi scrubbers	$400	$13
Y-12	U Fuel Element Fabrication	U-234 U-238	Additional stage HEPA filters and high-energy venturi scrubbers	$1,450	$50
			TOTALS:	$4,310	$92

2.6 SAVANNAH RIVER PLANT

2.6.1 Site Description

The facilities at the Savannah River Plant are used primarily to produce plutonium and tritium, the basic materials required for nuclear weapons. Materials for medical and space applications are also manufactured here, however. The Savannah River Plant is situated along the Savannah River at a site 35 km southeast of Augusta, Georgia. The site covers about 770 km^2.

Operations are grouped into five major areas (designated the 100, 200, 300, 400, and 700 Areas) according to their operational function in the plutonium manufacture/recovery process.

2.6.1.1 100 Area - Nuclear Production Reactors

Three production reactors were in operation. The three reactors produce plutonium and tritium by irradiation of uranium and lithium. Heavy water is used both as a neutron moderator and as a primary coolant. All three reactors have been subsequently shut-down pending the resolution of safety issues and other oporational problems.

2.6.1.2 200 Area - Separations and Waste Management Facilities

Nuclear fuel reprocessing occurs in this area. Plutonium is recovered from irradiated uranium by the PUREX solvent-extraction process. Enriched uranium and plutonium-238 are recovered from other irradiated materials by a solvent-extraction procedure similar to the PUREX process.

2.6.1.3 300 Area - Fuel and Target Fabrication

Tubular fuel and target elements are produced by cladding depleted uranium fuel in aluminum or aluminum/lithium shells. A low-power reactor and a subcritical test reactor are then used to test for assembly defects.

2.6.1.4 400 Area - Heavy Water Production and Recovery

Heavy water is produced from river water by distillation and extraction. Heavy water is also recovered from contaminated reactor coolant. Heavy water is transported from this area to the 100 Area for use in the production reactors.

2.6.1.5 700 Area - The Savannah River Laboratory

Research and process development work is performed at the Savannah River Laboratory. Major activities in this area include fabrication of fuel element and target prototypes; fabrication of radioisotopic sources for medical, space, and industrial applications; thermal and safety studies of reactor operations; and applied research in physics and the environmental sciences.

2.6.2 Major Release Points and Existing Emission Control Technology

Radionuclides are released into the atmosphere from a number of facilities on the SRP site (Ze87, Mo84). Each operating area has one or more discharge stacks that have emission control equipment installed. Monitoring systems record data on a real-time or a near real-time basis. All stack release data are reported annually. The largest quantities of radionuclides are released from the fuel reprocessing areas (F and H Areas). The three production reactor stacks (C, K, and P) release the next largest quantities, followed in descending order of quantities of radionuclide emissions by the heavy water rework plant, the Savannah River Laboratory, and the fuel and target fabrication plant.

Tritium is released from six facilities, with the tritium facilities (232-H, 234-H, 238-H) contributing about 66 percent of the total tritium dose; the reactor areas (105-C, 105-K, and 105-P) contribute about 10 percent, 16 percent, and 7 percent, respectively; the Moderator Rework Unit (420-D) contributes about 0.6 percent; and the Savannah River Laboratory contributes less than 0.01 percent.

Argon-41 is released exclusively at the operating reactors in roughly equal proportions.

Carbon-14 is released from the three operating reactors and from the separations plants in F and H Areas in approximately equal proportions.

In terms of radiation dose to the offsite population, the principal sources are the H Area tritium facilities, followed in order of decreasing contribution by 105-K, 105-C, 105-P, and the F and H Areas separations plants. The contributions from other source locations are negligible (less than 1 percent).

2.6.2.1 200-H Area Tritium Facility Stacks

Releases of tritium from the four stacks associated with the tritium facilities in the 200-H Area constitute the principal sources of radioactive emissions at SRP.

The emission control system uses a long transit volume (the "Serpentine") as a means to capture and hold air flows from process hoods that contain accidental releases of tritium, so that the contained tritium can be removed from the air before discharge to the stack. A nominal air flow continually passes through the Serpentine to the stack line. Air from the process hoods also normally flows to the stack line. When an in-line ion chamber detects a preset level of tritium in the hood outflow, the Serpentine inlet from the process hood is opened, and the hood flow is diverted to the Serpentine. The volume of the holdup line is sufficient to prevent loss of the tritium burst to

the stack. An ionization chamber near the end of the Serpentine detects the tritium concentration as it exits the Serpentine. If the concentration is greater than a preset limit, the volume that exceeds the limit is subsequently diverted and processed through the Hopcalite stripper and zeolite beds to remove the tritium. If the concentration is less than the preset limit, the trapped air volume is discharged to the stack.

The system uses a holdup tank into which batches of inert gases or air from various operational activities are placed for eventual processing through a Hopcalite stripper and two zeolite beds.

The efficiency of the Hopcalite stripper varies with operating conditions (oxidizer bed temperature, oxygen and hydrogen content in the gases to be treated) and can range from a few percent to nearly 100 percent. The actual average efficiency of the strippers at SRP is classified information and cannot be reported here.

2.6.2.2 Production Reactor Area Stacks

Releases of radioactivity into the atmosphere at the three production reactors are the next largest contributors to the offsite population dose resulting from operations at the SRP. Actual releases will vary from reactor to reactor, year by year, depending upon activities.

A ventilation system typical of the production reactors is described below. The filter system consists of inlet prefilters to remove particulates from incoming air, moisture separators to remove entrained moisture droplets from the outgoing air stream, particulate (HEPA) filters to remove particulate material, and charcoal filters to remove iodines. There are no provisions for reducing the emission of tritium, noble gases, or carbon-14.

Monitoring equipment at the 61-m reactor stacks includes continuous Kanne chambers and dehumidifier samplers for monitoring tritium emission, a continuous noble gas monitor utilizing a Ge-Li detector/multichannel analyzer system, a continuous charcoal filter for monitoring radioiodines, and a continuous filter paper sampler for particulate monitoring.

2.6.2.3 200-F and 200-H Area Separation Plants

Releases of radioactivity to the 291-F and 291-H and associated stacks (221-F and 221-H facilities) are principally carbon-14, noble gases, and small amounts of iodine.

Effluent control equipment on the 200-F Area ventilation systems consists principally of particulate filters: fiberglass, HEPA, and sand filters. Silver nitrate beds are used for scrubbing iodine from the dissolver offgas stream.

2.6.3 Basis for the Dose and Risk Assessment

2.6.3.1 Source Terms and Release Point Characterization

The total airborne releases, in Ci/y, from all sources during 1986 are listed below in Table 2.6-1.

Table 2.6-1. Radionuclides released to air during 1986 from Savannah River Plant.

Nuclide	Release Rate (Ci/y)
Am-241	1.9E-4
Ar-41	8.3E+4
C-14	5.6E+1
Ce-141	1.9E-5
Ce-144	1.1E-2
Cm-244	2.8E-5
Co-60	8.0E-6
Cs-134	6.9E-4
Cs-137	3.0E-3
H-3	4.2E+5
I-129	8.8E-2
I-131	2.6E-2
Kr-85	7.1E+5
Kr-85m	2.0E+3
Kr-87	1.4E+3
Kr-88	2.4E+3
Nb-95	9.2E-3
Os-185	1.4E-4
Pu-238	2.0E-3
Pu-239	2.9E-4
Ru-103	3.5E-3
Ru-106	5.9E-2
Se-75	2.1E-5
Sr-89	9.2E-4
Sr-90	1.4E-3
U-234	1.6E-3
U-238	1.6E-3
Xe-131m	3.0E-1
Xe-133	1.1E+4
Xe-135	2.6E+3
Zr-95	4.4E-3

In modeling the site, all releases were assumed to be made from the F-separations area. The releases were aggregated to five stacks: Stack 1 is the 100 Area (60 m): all nuclear production reactors; Stack 2 is the 200 Area (61 m): plutonium and uranium separation; Stack 3 is the 300 Area (10 m): Fuel and Target Fabrication; Stack 4 is the 400 Area (10 m): Heavy Water

Recovery and Production; Stack 5 is not used; and Stack 6 is the 700 Area (50 m): Laboratory. Default particle sizes (1.00 AMAD) and solubility classes were assumed.

2.6.3.2 Other Parameters Used in the Assessment

Meteorological data used in the assessment are from Augusta/Bush, Georgia. The 0-80 km population distribution was produced using the computer code SECPOP and 1980 Census Bureau data. Nearby individuals were located 15,000 m from the assumed release point (Ze87). Food consumption rates appropriate to a rural location were used.

2.6.4 Results of the Dose and Risk Assessment

The major contributors to exposure are tritium (77 percent) and argon-41 (18 percent). The predominant exposure pathways are inhalation, ingestion, and air immersion.

The results of the dose and risk assessment are presented in Tables 2.6-2 through 2.6-4. Table 2.6-2 presents the doses received by nearby individuals and the regional population. Doses to organs accounting for 10 percent or more of the risk are presented. Table 2.6-3 presents the estimated lifetime fatal cancer risk to nearby individuals with maximum exposure as well as estimated deaths per year in the regional population. Table 2.6-4 presents the estimated distribution of fatal cancer risk to the regional population.

Table 2.6-2. Estimated radiation dose rates from the Savannah River Plant.

Organ	Nearby Individuals (mrem/y)	Regional Population (person-rem/y)
Remainder	3.2E+0	6.7E+2
Gonads	2.6E+0	5.5E+2
Breast	2.6E+0	5.5E+2
Lungs	2.7E+0	5.6E+2
Red marrow	2.6E+0	5.5E+2

Table 2.6-3. Estimated fatal cancer risks from the Savannah River Plant.

Nearby Individuals Lifetime Fatal Cancer Risk	Regional (0-80 km) Population Deaths/y
8E-5	2E-1

Table 2.6-4. Estimated distribution of the fatal cancer risk to the regional (0-80 km) population from the Savannah River Plant.

Risk Interval	Number of Persons	Deaths/y
1E-1 - 1E+0	0	0
1E-2 - 1E-1	0	0
1E-3 - 1E-2	0	0
1E-4 - 1E-3	0	0
1E-5 - 1E-4	550,000	2E-1
1E-6 - 1E-5	0	0
< 1E-6	0	0
Totals	550,000	2E-1

2.6.5 Supplementary Controls

This section examines specific sources of radionuclide emissions, and existing control systems, discusses current discharge rates, suggests additional control equipment and anticipated reduction in emissions, and estimates costs of the suggested additional equipment (Mo86).

2.6.5.1 Additional Emission Control Technology for the 200-H Area Tritium Facility Stacks

Releases of tritium from the four stacks associated with the Tritium Facilities in the 200-H Area constitute the principal sources of radioactive emissions at SRP. They resulted in a radiation dose to the offsite population of about 67 man-rem during 1981. This dose represents about 57 percent of the total population dose from SRP emissions.

The efficiency of the catalytic oxidizer system might be improved by replacing the Hopcalite (80 percent MnO_2 - 20 percent CuO) beds with a palladium catalyst. Recycling the effluent gases through the stripper combined with hydrogen swapping will also improve the efficiency of the stripper. The SRP staff has estimated that recycling could reduce normal tritium emissions by 25 percent. The cost of the system improvements is estimated to be about $65 million. The system lifetime is estimated to be about 15 years.

2.6.5.2 Additional Emission Control Technology for the Production Reactor Area Stacks

Releases of radioactivity into the atmosphere at the three production reactors are the next largest contributors to the offsite population dose resulting from operations at the SRP. Actual releases vary from reactor to reactor, year by year, depending upon activities.

Tritium emissions from the heavy water moderated reactors could be reduced by (1) replacing tritiated moderator with fresh moderator, (2) minimizing evaporation losses from the moderator, and (3) removing tritium from the existing moderator. While none of these approaches is classified as emission control technology, they are operational in that they attempt to prevent tritium in the ventilation system rather than attempting to remove the tritium from the effluent air stream.

The first approach is not particularly viable. The effect would be only temporary since the tritium levels in the moderator build up with each year of reactor operation.

The second approach is normal operating practice and is already carried out to the extent feasible.

The third approach would use either vapor phase catalytic exchange with cryogenic distillation (CE-CD) or a thermal cycle absorption process (TCAP). These processes have the potential for reducing tritium emissions at the production reactors by about 90 percent once steady-state operation is achieved after about 6 years. SRP staff estimate capital costs for a CE-CD system are to be in the $20-40 million range. Estimated annual operating cost would be in the $1.5 to $2 million range, with an estimated operating life of 30 years. No estimates are currently available for the cost of a TCAP system.

Releases of argon-41 at the production reactors could be reduced by installing a holdup volume into which the air containing the argon-41 (from the annular cavity around the reactor tank) could be routed, thus allowing the radioactivity to decay to insignificant levels. A possible system would use an existing 1,893-m^3 tank in the emergency core cooling system. An air flow of 1.4 to 4.3 m^3/minute into an effective storage volume of 707 m^3 is expected to reduce argon-41 emissions by about 60 percent. The feasibility of utilizing the 1,893-m^3 tank for this purpose is being actively investigated. The capital cost of this proposed system is small, since mostly existing systems and equipment would be used.

No other systems for reducing emissions from the production reactors are presently under consideration.

2.6.5.3 Additional Emission Control Technology for the 200-F and 200-H Area Separation Plants

Releases of radioactivity to the 291-F and 291-H and associated stacks (221-F and 221-H facilities) are principally carbon-14, noble gases, and small amounts of iodine.

Carbon-14, the noble gases, and iodine contribute nearly all of the radiation dose from the separations plants. An absorber system utilizing flaked barium hydroxide octahydrate to form barium carbonate, thus capturing the carbon-14, could be installed. In addition, one of several techniques for capturing the noble gases (particularly krypton-85) could also be installed. These techniques, cryogenic distillation, fluorocarbon absorption, and absorption on mordenite beds, all have decontamination factors of about 100. The iodine removal capability of the existing iodine absorber beds utilizing silver nitrate could be improved if the beds were converted to silver mordenite, moved from the dissolver off-gas system, and installed in the vessel vent system.

SRP staff estimates that an integrated off-gas treatment system utilizing the above techniques would cost about $50 million per plant and would have annual operating costs of about $3 million.

2.7 FEED MATERIALS PRODUCTION CENTER

2.7.1 Description and Existing Controls

2.7.1.1 Site Description

The Feed Material Production Center, located 32 km northwest of Cincinnati, Ohio, produces uranium metal and other materials for DOE facilities. The uranium may be natural, depleted, or enriched with respect to uranium-235.

Raw materials are processed in the following manner. The material is first dissolved in nitric acid and separated by liquid organic extraction. The recovered uranium is reconverted to uranyl nitrate, heated to form uranium trioxide, reduced to uranium dioxide with hydrogen, and reacted with hydrogen fluoride to form uranium tetrafluoride. Purified metal is made by reacting the uranium tetrafluoride with metallic magnesium in a refractory-lined vessel.

The U.S. DOE Effluent Information System Nuclide Database Master List for 1986 reports emissions in 1986 from eight plants at the FMPC (EIS86). These emissions are listed in Table 2.7-1. The emissions are identified as natural uranium in the form of particulates. Each plant at the FMPC has several stacks.

DOE forecasts indicate increased use of the FMPC in support of increased work at other DOE sites (We87, Mo84). The actual magnitude of this increased FMPC production depends on the needs of other DOE sites but could reasonably be expected to double the 1981 production. A corresponding increase in total uranium emissions would therefore be expected, assuming no change in emission control technology.

2.7.1.2 Major Release Points and Existing Emission Control Technology

Emission control technology at the FMPC differs from that of other sites in two major aspects: (1) emissions are essentially all particulates, with natural uranium being the predominant radionuclide; and (2) each plant at the FMPC has multiple stacks, each with its own emission control device and each providing ventilation to a specific area or specific equipment within a given plant.

Chemical and radioactive emissions at the FMPC are controlled by wet scrubbers, bag-type dust collectors, and electrostatic precipitators. The radioactive emissions from the various plants are essentially all particulate emissions. Emissions from Plants 4, 5, and 8 are controlled by the bag-type dust collectors or wet scrubbers.

Bag-type dust collectors are installed on many of the stacks. The dust collectors for these particular stacks have been shown to have total system efficiencies of >99.9 percent over a 2-year period. Most of the material losses occur because of cloth bag ruptures or other malfunctions that allow the dust to bypass the filter.

Stack emissions are constantly sampled using a permanently installed in-stack sampling system. These systems require the collection of about 1 g of material before the collection filters are removed for analysis. A continuous stack monitoring device that will be used in addition to the existing stack samplers has been installed on selected stacks. The results to date indicate that the new stack monitoring device is very sensitive to small quantities of material loss; it has detected minor leaks in dust collection bags that, prior to its installation, had gone undetected until a buildup of material on the stack sampler was found.

2.7.2 Basis for the Dose and Risk Assessment

2.7.2.1 Source Terms and Release Point Characterization

The total airborne releases, in Ci/y, from all sources during 1986 are listed below in Table 2.7-1.

Table 2.7-1. Radionuclides released to air during 1986 from FMPC.

Nuclide	Release Rate (Ci/y)
U-234	2.0E-2
U-238	2.0E-2

In modeling the site, all releases were assumed to be made from a 10-m stack. Default particle sizes (1.00 Amad) were assumed. The uranium-234 and uranium-238 emissions were assumed to be 1/3 Class D, 1/3 Class W, and 1/3 Class Y.

2.7.2.2 Other Parameters Used in the Assessment

Meteorological data used in the assessment are from Covington/GTR Cincinnati, Ohio. The 0-80 km population distribution was produced using the computer code SECPOP and 1980 Census Bureau data. Nearby individuals were located 800 m from the assumed release point (We87). Food consumption rates appropriate to an urban location were used.

2.7.3 Results of the Dose and Risk Assessment

The major contributors to exposure are uranium-234 (53 percent) and uranium-238 (48 percent). The predominant exposure pathway is inhalation for uranium-234 and uranium-238.

The results of the dose and risk assessment are presented in Tables 2.7-2 through 2.7-4. Table 2.7-2 presents the doses received by nearby individuals and the regional population. Doses to organs accounting for 10 percent or more of the risk are presented. Table 2.7-3 presents the estimated lifetime fatal cancer risk to nearby individuals with maximum exposure, as well as estimated deaths per year in the regional population. Table 2.7-4 presents the estimated distribution of fatal cancer risk to the regional population.

Table 2.7-2. Estimated radiation dose rates from FMPC.

Organ	Nearby Individuals (mrem/y)	Regional Population (person-rem/y)
Lungs	1.9E+1	1.1E+2

Table 2.7-3. Estimated fatal cancer risks from FMPC.

Nearby Individuals Lifetime Fatal Cancer Risk	Regional (0-80 km) Population Deaths/y
3E-5	3E-3

Table 2.7-4. Estimated distribution of the fatal cancer risk to the regional (0-80 km) population from FMPC.

Risk Interval	Number of Persons	Deaths/y
1E-1 - 1E+0	0	0
1E-2 - 1E-1	0	0
1E-3 - 1E-2	0	0
1E-4 - 1E-3	0	0
1E-5 - 1E-4	85	2E-5
1E-6 - 1E-5	4,100	1E-4
< 1E-6	3,300,000	3E-3
Totals	3,300,000	3E-3

2.7.4 Supplementary Controls

The U.S. DOE Effluent Information System Nuclide Database Master List for 1986 reports emissions in 1986 from eight plants at the FMPC. Although the major emission sources (stacks) differ each year, Plants 4, 5, and 8 are consistently the greatest source of emissions. The emissions are identified as natural uranium in the form of particulates (EIS86, Mo84).

As mentioned, DOE forecasts indicate increased FMPC production, perhaps as much as double the 1981 production. A corresponding increase in total uranium emissions would therefore be expected, assuming no changes are made in the existing emission controls.

2.7.4.1 Emission Control Technology

The FMPC has over 50 dust collection stacks in either full- or part-time operation. The operating stacks already use very efficient dust collection systems. Additional improvement in reducing operational releases is expected by using Goretex fabric bags rather than wool bags and by using administrative controls in conjunction with the continuous stack monitor. Approximately 20 additional stacks have either been abandoned or placed on standby status. Extensive repair and refurbishment would be needed to return the abandoned and standby dust collection stacks to operation.

However, neither the use of improved fabric bags in the existing baghouses, nor installation of continuous radionuclide stack monitors will insure reductions in uranium particulate emissions at the FMPC. Reductions in emissions to lower levels will require the installation of secondary air cleaning systems on the primary emission sources located in Plants 4, 5, and 8.

2.7.4.1.1 Proposed Emission Control Equipment

It is proposed that HEPA filter systems be installed, in addition to the existing emission control technology, on each of the emission sources from Plants 4, 5, and 8 to reduce their particulate emissions. By definition, each individual HEPA filter must have a minimum particle removal efficiency >99.97 percent for particles 0.3 um diameter.

It has been assumed each system will use redundant HEPAs, each sized for the stated airflow. Filter housings and ductwork are stainless steel. Inlets to the HEPA systems are from existing baghouses or scrubbers.

Placement of the proposed HEPA filter systems depends on: (1) available existing space in Plants 4, 5, and 8; (2) space that could be made available by removal of obsolete and unneeded existing emission controls; and (3) allowable floor or roof live loads at the locations proposed for installation of the HEPA filter systems. The floor loading attributed to the proposed systems is very light and for most of the filter systems would require the addition of only minor secondary steel for support. However, the Plant 5 perimeter appears heavily loaded and may require the additional filter systems to be located outside the existing structure, i.e., a new structure or structures may be required for the filter systems installed in Plant 5.

2.7.4.1.2 Existing and Proposed Stack Monitoring Systems

Radionuclide emissions at the FMPC are essentially all natural uranium in the form of particulates. Emission particle sizes and particle densities have not been reported.

Each stack at the FMPC has an in-stack sampler to determine the quantity of particulates emitted. The sampler collects particulates on a filter paper which is periodically removed and the quantity of uranium collected determined by chemical analyses. Each stack sampler is operated under isokinetic conditions so that total stack emissions can be determined from the quantity of material collected by the stack sampler.

The FMPC has installed new, continuous stack monitors on the following stacks: Plant 4, Stacks G4-2, G4-12, and G4-14; Plant 5, Stacks G5-250, G5-260, and G5-261; Plant 8, Stack G43-27; and Plant 9, Stack G9N1-1039. The continuous stack monitors are pancake-type Geiger-Muller probes installed to monitor the back side of the filter paper used in the in-stack particulate sampler. The continuous stack monitors provide information in real-time on stack emissions. The new monitors can be alarmed for rate-of-rise of radioactivity detected and coupled to automatic shutoff of the process equipment. The rate-of-rise alarm on the continuous stack monitor indicates the failure of the existing primary emission control device (baghouse or

scrubber) to control emissions adequately. The usual cause of alarms for existing baghouses is a break or tear in a bag. The new continuous stack monitors have shown they can detect small leaks in bags that would have gone unnoticed until a buildup of material on the in-stack sampler was observed.

Thus, engineered controls to shut down a given process as a result of using the continuous stack monitor are possible. The FMPC already has administrative controls to shut down processes in order to replace leaking bags in the existing baghouses. However, the reliability of coupling process shut down to the continuous stack monitors is presently unknown. In addition, the FMPC has stated that some processes cannot be shut down during certain operational phases.

The use of the continuous stack monitor is highly recommended as a method to detect leaks in bags or excessive emissions from either the baghouses or scrubbers. However, installation of the continuous stack monitor cannot insure reductions in emissions; secondary particulate emission control devices are also required.

The continuous stack monitors are best used in their existing configuration, i.e., real-time detection of emissions prior to the secondary particulate emission control devices. This configuration allows rapid detection and repair of deficiencies in the primary emission control devices and should reduce the rate of particulate loading on the HEPA filter systems proposed as the secondary emission controls.

A second in-stack sampler (filter paper collector) downstream of the final emission control device is also recommended for uranium inventory control and determination of actual emissions to the environment. If possible, this in-stack sampler should be analyzed to correlate with annual reporting requirements.

2.7.4.2 Estimated Cost for Emission Control Technology

The FMPC has plans to obtain and install 14 additional continuous stack monitors at an estimated cost of $105K ($7.5K per continuous stack monitor). The acquisition of 14 additional continuous stack monitors would allow installation of a continuous stack monitor on each of the stacks that currently do not have one, plus on other selected stacks.

A summary of the cost estimates for the acquisition and installation of the conceptual design HEPA filter systems for each of the stacks is given in Table 2.7-5.

2.7.4.2.1 <u>Effect of Proposed Equipment</u>

Reductions in emissions from the existing emission control devices based on the installation of continuous stack monitors

Table 2.7-5. Cost estimates for acquisition and installation of HEPA filter systems.

Stack No.	HEPA Filter Installation Cost ($ Thousands)	Total Cost[a] ($ Thousands)
G4-2	129.9	324.8
G4-5[a]	57.2	143.0
G4-7	131.0	327.5
G4-14[a]	101.1	252.8
G5-249	131.0	327.5
G5-254	102.1	255.3
G5-256	131.0	327.5
G5-260[a]	102.4	256.0
G5-261[a]	332.2	830.5
Plant 55	76.3	190.8
G43-27[a]	178.7	446.8
8024	73.4	183.5
Rotary Kiln[a]	73.5	183.8
Oxidation #I[a]	57.2	143.0
Total	1677.0	4192.8

(a) Includes A-E fee, allowance for removal of existing systems, and allowance for additional structural supports.

and coupled to either engineered and/or administrative controls are not known at present. The effectiveness of these measures in reducing emissions depends both on the increased sensitivity of detection and the implementation of both effective engineered and administrative controls.

Installation of HEPA filter systems as secondary air cleaning systems is estimated to achieve at least a 90 percent reduction in emissions. The total emissions from the FMPC will vary as a function of its utilization. As stated previously, DOE forecasts increased use of the FMPC in the future. Consequently, the reduced stack emissions that would result from the installation of additional emission control technologies are not absolute values but will reflect the usage of the FMPC.

Some uncertainty results in designating only the scrubbers for the rotary kiln and oxidation furnace #1 in Plant 8 as needing secondary emission control technology because there are a total of four scrubbers in Plant 8. No data were available for the other two scrubbers, and the mass of material emitted from the scrubbers is the sum of the four units.

Architect-Engineer services are typically about 25 percent of all other costs. Thus, total costs for the proposed secondary emission controls may be expected to be about 2-1/2 times greater than the costs shown.

A total secondary emission control cost estimate for the seven stacks is approximately $2.3 million. This estimate is less than half the estimate provided by the FMPC for the six stacks having the greatest emissions in 1986. Direct comparison of the present cost estimates for a specific stack to those of the FMPC is not possible because FMPC provided no details for its estimates. The FMPC has estimated a cost of approximately $14M to install secondary emission controls on all presently operating stacks (Mo86). In either case, the cost estimates are approximate values, subject to revision based on additional information.

2.7.4.2.2 Operation and Maintenance Costs

Addition of continuous stack monitors, as planned by the FMPC, will result in the need for their periodic maintenance. These maintenance needs are not expected to be excessive, although the addition of one full-time-equivalent instrument technician may be required. Regular operations personnel are expected to be responsible for standard operation of the monitors. No unusual operating or maintenance costs are predicted as a result of the installation of additional continuous stack monitors.

HEPA filter replacement costs have been estimated to be $94,000 per year for the seven stacks having the greatest emissions and $111,000 per year for all fourteen stacks. The filter replacement cost estimate is based on an average cost of $350 per filter (stainless steel housing) and the total number of filters to be replaced per year (Mo86).

The FMPC currently has no facilities to process uranium-loaded HEPA filters of the size and quantity proposed in order to recover the uranium. Additional costs for this operation have not been estimated.

If the HEPA filters are discarded, they would have to be disposed of as low specific-activity radioactive waste, i.e., sent to a low-level radioactive waste burial ground. Costs for the packaging, transport, and burial of discarded HEPA filters have not been estimated.

2.8 BROOKHAVEN NATIONAL LABORATORY

2.8.1 Description and Existing Controls

2.8.1.1 Site Description

Studies conducted at Brookhaven Laboratories pertain to the use, environmental effects, and transport of both nuclear and nonnuclear energy materials. Other research programs include applied nuclear studies involving various radioisotopes and investigations of the physical, chemical, and biological effects of radiation. Brookhaven Laboratory is located in the center of Long Island, about 113 km from New York City.

The equipment and facilities used to support the research projects conducted at Brookhaven include several reactors, particle accelerators, and laboratories. Point and area sources of radionuclide releases at Brookhaven include:

- The 40-MW High-Flux Beam Reactor (HFBR)
- The Alternating Gradient Syncrotron, a proton accelerator used in ultra-high energy particle physics research
- The Brookhaven Linac Isotope Production Facility (BLIP)
- The Chemistry Linac Irradiation Facility (CLIF)
- The Brookhaven Medical Research Reactor
- The Van de Graaff accelerator
- Various chemistry and medical research laboratories

Most of the airborne radionuclide emissions from Brookhaven originate from the High-Flux Beam Reactor, the Brookhaven Linac Isotope Production Facility, and the Van de Graaff research generator. Lesser emissions are from the chemistry and medical research centers.

Because very small quantities of radionuclides are released from the Hazardous Waste Management Area, the assessments of exposure and health risk at the Brookhaven site are based on airborne releases from the remaining six effluent stacks. Process descriptions, effluent data, and site information were obtained from reports prepared by Brookhaven Laboratories and DOE studies (Mo84, Mi87b).

2.8.1.2 Major Release Points and Existing Emission Control Technology

In this section, the points of discharge that contribute most to the airborne radionuclide emissions at the BNL site are discussed.

Table 2.8-1. Radionuclide emission points stacks at Brookhaven National Laboratories.

Location	Stack Height (m)
Brookhaven Linac Isotope Production Facil., Bldg-931	18
High-Flux Beam Reactor Hot Laboratory	98
Hazardous Waste Management Area	10
Medical Research Reactor Building-491	45
Chemistry Building-555	Unknown
Medical Research Center	Unknown
Van de Graaff Accelerator Building-901	18

2.8.1.2.1 HFBR Stack

The principal radionuclides discharged from the HFBR stack are tritium (from the HFBR) and xenon-127 and small amounts of unidentified radionuclides that emit beta and gamma radiation (from the Hot Laboratory). Tritium is the most prevalent radionuclide discharged.

The HFBR facility (Building 750) is ventilated by about 566 m^3/min of air, all of which is filtered through absolute HEPA filters to remove particulates and radioactivity before being discharged from the 98-m stack. In addition, procedural and administrative controls have been implemented to detect tritium, prevent its leakage, and reduce the release of tritiated water vapor from the HFBR stack. Since 1977, yearly replacement of a portion of the heavy water (moderator and coolant) has reduced the annual tritiated water vapor released from the HFBR by approximately 50 percent.

The hot area of the Hot Laboratory (Building 801) consists of five semihot cells, three chemical processing hot cells, and three high-level hot cells for handling multicurie amounts of radioactive materials. Each cell is equipped with its own roughing exhaust air filter, as well as a backup HEPA filter in the exhaust line leading to the stack. The three chemical process cells have a separate exhaust air system that uses a NaOH scrubber and charcoal filter to remove radioiodines. The small amount of xenon-127 released is diluted after release from the stack. All effluents from the Hot Laboratory are exhausted to the 98-m HFBR stack.

2.8.1.2.2 Brookhaven LINAC Isotope Production Facility

The targets used for the production of desired radionuclides in the BLIP facility are sealed so that no radioactivity can escape from them during normal operation. However, oxygen-15 and tritium are formed by the incident protons in the target cooling

water. Larger release rates of oxygen-15 in relation to the other gases result because it is swept out with absorbed oxygen in the cooling water. The absorbed oxygen is formed by the radiolytic formation of stable oxygen. The airborne effluents from the BLIP facility undergo HEPA filtration to remove any particulates prior to monitoring and release from an 18-m stack. The oxygen-15 and tritium currently receive no treatment prior to discharge from the stack (Mo86).

2.8.1.2.3 Brookhaven Medical Research Reactor

The principal radioactive gas discharged during routine operations of the BMRR is 110-minute half-life argon-41, which is produced in the cooling air in the reactor's graphite reflectors. At a full power level of 3 MW, a release rate of about 3 Ci/hr has been established by direct measurements. The operation of the BMRR is administratively controlled to a daily limit of 24 MWhr. Currently, it is operated intermittently for short-lived activation irradiation. The BMRR is enclosed in a containment building that is maintained under negative pressure to prevent inadvertent releases to the outside. Air flow from the building is passed through HEPA and charcoal filters to remove particulates before being vented to the atmosphere via a 45-m stack.

2.8.1.2.4 Research Van de Graaff Accelerator

The principal radionuclide discharged to the atmosphere from the Research Van de Graaff Accelerator is tritium. Currently, about 95 percent of the release is in gaseous form and about 5 percent is tritiated water vapor. The air control system in this facility is designed to function as a closed system. During normal operation, a low-pressure pump is used to maintain negative pressure on the system. The output of this pump is routed through a catalytic recombiner where the tritium gas is converted to tritiated water vapor which is passed through a dessicant for removal. Spent dessicants are periodically removed and transported offsite for disposal with other low-level solid waste. When the accelerator is shut down for maintenance, the negative pressure is removed and air at atmospheric pressure is allowed to fill the system. Upon completion of maintenance, the system is pumped down to a negative pressure. During these times, the flow exceeds the capacity of the recombiner and the excess flows are routed directly to the stack via a by-pass line. When tritium ions are being accelerated, about 200 Ci/month of tritium gas is used. Of the total tritium used, about 50 percent is trapped by the dessicant and about 50 percent is released from the 18-m stack attached to Building 901.

2.8.2 Basis for the Dose and Risk Assessment

2.8.2.1 Source Terms and Release Point Characterization

The total airborne releases, in Ci/y, from all sources during 1986 are listed in Table 2.8-2.

Table 2.8-2. Radionuclides released to air during 1986 from Brookhaven National Laboratory.

Nuclide	Release Rate (Ci/y)
Ar-41	1.2E+3
Ba-133	2.7E-6
Be-7	1.8E-6
Br-82	7.8E-3
C-14	7.7E-4
Co-57	2.2E-5
Cr-51	1.1E-4
Fe-55	5.1E-3
H-3	1.6E+2
Hg-203	1.2E-6
I-125	5.2E-4
I-126	3.2E-4
I-131	5.1E-4
I-133	1.8E-4
Mn-54	1.0E-5
O-15	1.5E+2
P-32	2.5E-4
Ru-103	1.2E-5
S-35	5.7E-4
Sb-122	3.0E-7
Se-75	2.0E-5
Sn-113	2.0E-4
Sn-117m	4.2E-5
Tc-99	1.0E-4
Tc-99m	2.0E-4
Tl-201	2.1E-5
Xe-125	8.8E-5
Xe-127	5.7E-4
Xe-131m	6.8E-6
Zn-65	1.3E-6

In modeling the site, all releases were aggregated to six stacks: Stack 1 is Chemistry Building #555, with a stack height of 17 m; Stack 2 is the Van De Graaff Building 901, with a stack height of 18 m; Stack 3 is the HFBR Hot Lab, with a stack height of 98 m; Stack 4 is the Hazardous Waste Management Area, with a stack height of 10 m; Stack 5 is the MRC Buildings 490 and 491, with a stack height of 14 m; and Stack 6 is the BLIP Building

931, with a stack height of 18 m. Default particle sizes (1.00 AMAD) and solubility classes were assumed.

2.8.2.2 Other Parameters Used in the Assessment

Meteorological data used in the assessment are from Lawrence, New York. The 0-80 km population distribution was produced using the computer code SECPOP and 1980 Census Bureau data. Nearby individuals were located 750 m from the assumed release point. Food consumption rates appropriate to an urban location were used.

2.8.3 Results of the Dose and Risk Assessment

The major contributor to exposure is argon-41 (94 percent). The predominant exposure pathway is air immersion.

The results of the dose and risk assessment are presented in Tables 2.8-3 through 2.8-5. Table 2.8-3 presents the doses received by nearby individuals and the regional population. Doses to organs accounting for 10 percent or more of the risk are presented. Table 2.8-4 presents the estimated lifetime fatal cancer risk to nearby individuals with maximum exposure, as well as estimated deaths per year in the regional population. Table 2.8-5 presents the estimated distribution of fatal cancer risk to the regional population.

Table 2.8-3. Estimated radiation dose rates from the Brookhaven National Laboratory.

Organ	Nearby Individuals (mrem/y)	Regional Population (person-rem/y)
Gonads	8.0E-1	3.8E+0
Remainder	6.2E-1	3.0E+0
Breast	7.2E-1	3.4E+0
Red marrow	6.2E-1	2.9E+0
Lungs	6.1E-1	2.9E+0

Table 2.8-4. Estimated fatal cancer risks from the Brookhaven National Laboratories.

Nearby Individuals Lifetime Fatal Cancer Risk	Regional (0-80 km) Population Deaths/y
2E-5	1E-3

Table 2.8-5. Estimated distribution of the fatal cancer risk to the regional (0-80 km) population from the Brookhaven National Laboratories.

Risk Interval	Number of Persons	Deaths/y
1E-1 - 1E+0	0	0
1E-2 - 1E-1	0	0
1E-3 - 1E-2	0	0
1E-4 - 1E-3	0	0
1E-5 - 1E-4	800	2E-4
1E-6 - 1E-5	1,800	6E-5
< 1E-6	5,200,000	9E-4
Totals	5,200,000	1E-3

2.8.4 Supplementary Controls

Ninety-four percent of the risk estimated for BNL results from the release of Argon-41 from the BMRR. Argon-41 emissions could be reduced by the addition of a hold-up tank to allow the argon-41 to decay.

2.9 MOUND FACILITY

2.9.1 Description and Existing Controls

2.9.1.1 Site and Release Point Description

The Mound Facility, located in Miamisburg, Ohio, about 16 km southwest of Dayton, Ohio, has a variety of active programs. These include research and development, processing of solid wastes for tritium recovery, fabrication and testing of weapons components, production of stable isotopes for the market, and manufacture of radioisotopic heat sources for military and aerospace applications.

The principal emissions of tritium and plutonium emanate from nine buildings, designated as HH, SW, H, PP, R, SM, WD, WDA, and 41. Buildings HH and SW, which contain the tritium recovery and reprocessing facilities, are the sole release points of tritium. Plutonium is released from the other facilities as a result of heat source production and waste disposal operations.

2.9.2 Basis for the Dose and Risk Assessment

2.9.2.1 Source Terms and Release Point Characterization

The total airborne releases, in Ci/y, from all sources during 1986 are listed in Table 2.9-1.

Table 2.9-1. Radionuclides released to air during 1986 from Mound Facility.

Nuclide	Release Rate (Ci/y)
H-3	3.6E+3
Pu-238	5.8E-6
Pu-239	1.4E-7
U-234	7.5E-8
U-238	8.4E-8

In modeling the site, all releases were assumed to be made from a single 61-m stack. Default particle sizes (1.00 AMAD) and solubility classes were assumed.

2.9.2.2 Other Parameters Used in the Assessment

Meteorological data used in the assessment are from Dayton, Ohio. The 0-80 km population distribution was produced using the computer code SECPOP and 1980 Census Bureau data. Nearby individuals were located 1,500 m from the assumed release point (Mi87b). Food consumption rates appropriate to an urban location were used.

2.9.3 Results of the Dose and Risk Assessment

The major contributor to exposure is tritium (98 percent). The predominant exposure pathway is inhalation.

The results of the dose and risk assessment are presented in Tables 2.9-2 through 2.9-4. Table 2.9-2 presents the doses received by nearby individuals and the regional population. Doses to organs accounting for 10 percent or more of the risk are presented. Table 2.9-3 presents the estimated lifetime fatal cancer risk to nearby individuals with maximum exposure, as well as estimated deaths per year in the regional population. Table 2.9-4 presents the estimated distribution of fatal cancer risk to the regional population.

2.10 IDAHO NATIONAL ENGINEERING LABORATORY

2.10.1 Description and Existing Controls

2.10.1.1 Site Description

The Idaho National Engineering Laboratory is a reactor testing facility in southeastern Idaho, about 56 km west of Idaho Falls. The following four contractors operate facilities here: EGho, Inc.; Allied Chemical Corporation; Argonne West Laboratory; and Westinghouse Electric Corporation.

Table 2.9-2. Estimated radiation dose rates from the Mound Facility.

Organ	Nearby Individuals (mrem/y)	Regional Population (person-rem/y)
Remainder	4.1E-2	3.3E+0
Gonads	3.7E-2	3.0E+0
Breast	3.7E-2	3.0E+0
Lungs	3.8E-2	3.0E+0
Red marrow	3.7E-2	3.0E+0

Table 2.9-3. Estimated fatal cancer risks from the Mound Facility.

Nearby Individuals Lifetime Fatal Cancer Risk	Regional (0-80 km) Population Deaths/y
1E-6	3E-3

Table 2.9-4. Estimated distribution of the fatal cancer risk to the regional (0-80 km) population from the Mound Facility.

Risk Interval	Number of Persons	Deaths/y
1E-1 - 1E+0	0	0
1E-2 - 1E-1	0	0
1E-3 - 1E-2	0	0
1E-4 - 1E-3	0	0
1E-5 - 1E-4	0	0
1E-6 - 1E-5	1,000	2E-5
< 1E-6	2,900,000	3E-3
Totals	2,900,000	3E-3

EGc., operates several test reactors. These reactors provide operating information for the development of reactor safety programs, for determination of the performance of reactor materials and equipment, and occasionally, for use in research performed by private organizations. Other activities include disassembly and reassembly of large radioactive reactor components, preparation of test specimens for use in various operating reactors, and waste handling.

Fuel processing is the major operation that Allied Chemical conducts at this site. Its Idaho Chemical Processing Plant stores irradiated fuel and reprocessed fuel and converts high-level radioactive liquid waste to solid form.

Westinghouse operates the Naval Reactor Facility at the Idaho Laboratory. This facility serves as a testing area for prototype naval reactors and as a disassembly and inspection area for expended reactor cores.

Argonne West operates the experimental Breeder Reactor, the transient Reactor Test Facility, and the Zero Power Physics Reactor.

2.10.1.2 Major Release Points and Existing Emission Control Technology

2.10.1.2.1 Advanced Test Reactor (ATR)

The ATR has an operational thermal-power level rating of 150 MW. It is designed for use in developing advanced cores and fuel system materials for commercial power programs. The ATR is a light-water-moderated and cooled system that employs the flux concentration principle (flux traps) to achieve higher neutron flux levels.

Ventilation air from the ATR is discharged from a 76-m stack with no waste treatment system employed. The stack is monitored on a continuous basis for particle and gaseous activity. Noble gases, such as argon, krypton, and xenon, are released. The airflow rate of the stack is 1,275 m^3/min.

2.10.1.2.2 Idaho Chemical Processing Plant (ICPP)

The ICPP is used to process highly enriched-irradiated nuclear reactor fuel elements in order to recover uranium. Fuel elements from INEL reactors (test and research), other research reactors (domestic and foreign), and U.S. Navy ship propulsion reactors have been reprocessed. Airborne emissions from the ICPP are largely attributable to off-gases from the process dissolvers, process vessels, analytical facilities, sample stations, waste solvent burner, New Waste Calcining Facility (NWCF), and ventilation air. The New Waste Calcining Facility is used to convert radioactive liquid waste from the ICPP to a solid, using a fluidized bed calcination process.

The atmospheric protection system (APS) serves as a final cleanup facility for most ventilation systems and the process off-gas systems within the ICPP. The APS is divided into three treatment sections: (1) ventilation air treatment, (2) nitrogen oxide-bearing off-gas treatment, and (3) hydrogen-rich off-gas treatment.

The vessel off-gas treatment section of the APS facilitates treatment of the process off-gases from: (1) continuous process modification dissolver off-gas (CPMDOG), (2) vessel off-gas, and (3) the New Waste Calcining Facility. This section of the APS consists of a condenser, demister, superheater, prefilter, final filter, and blowers. The system is constructed of stainless steel for acid resistance.

A single-story 15.8 x 6.1 m building attached to the southeast corner of the HEPA building, CPP-649, contains the APS cleanup system and blowers for the VOG process off-gases. The cleanup portion of the system (condenser, demister, superheater, and prefilter) is in the east part of the building. Some valves that may require opening or closing during operation are equipped with reach rods that penetrate the shielding wall.

The demister consists of two 10-cm-thick stainless steel mesh elements contained in a stainless steel chamber.

The prefilter is constructed of five separate fiberglass beds supported on stainless steel screens. Contained in a 3.7 x 2.1 x 4.0 m stainless steel housing, the prefilter has a water line for flushing the filter medium. The prefilter can be bypassed during flushing. The flush water drains to the process equipment waste (PEW) evaporator feed tank. The three HEPA filters are housed in caissons equipped with dampers for individual filter isolation. The HEPA filters are made of acid- and moisture-resistant materials. The HEPA filters are equipped with knife-edge seals to prevent leakage.

Two stainless steel blowers exhaust the VOG streams to the main stack. Only one blower is required for normal operation. The operating blower is switched automatically to emergency power during commercial power outages; the standby blower starts automatically on failure of the operating blower to maintain necessary vacuum. The blowers are provided with automatic air operated valves to isolate the unit not in operation.

The ventilation exhaust filter system, a portion of the APS, consists of a deep-bed fiberglass prefilter in series with standard HEPA filters. The prefilter is located in an underground reinforced concrete vault (CPP-756), measuring 12.2 x 27.4 x 4.3 m. The vault includes a system for backwashing the prefilter medium. Over-temperature protection for the filters is provided by a fog-spray system located upstream of the prefilter. This system actuates on high-gas temperature in the duct and cools the gas and protects the filters from an in-cell fire. A bypass duct is provided around the prefilter for use during washing of the filter medium.

The ventilation air ducts from the various buildings join before entering the prefilter distribution plenum. The distribution plenum extends the full length of the west side of the vault and distributes air, via flow slots, into each of four bays.

The floor of the underground vault is sloped to the north; four troughs drain condensate or flush water to the north edge of the vault. From there, another trough carries the water to a 1,893-l capacity collection sump located in the northeast corner of the vault. The sump is equipped with a high-level alarm and a sampler. From the sump, the liquid and associated solids are jetted to the PEW evaporator feed tank, WL-102.

The south wall of the vault has six viewing ports for inspection of the vault and filters. No lights are provided in the vault; portable lighting is used when needed.

The roof of the vault is 0.3 m below grade and covered with about 0.6 m of earth for radiation shielding. The roof and earth cover are sloped to allow proper drainage, and the vault is of leaktight construction. The cracks between the removable interlocking concrete blocks are caulked, and a butyl rubber membrane covers the entire roof of the vault. Insulation board overlays the membrane to prevent damage by the soil.

The prefilter has an area of 279 m^2 and has a maximum flow rate of 4,245 m^3/min. The prefilter is designed for gas upflow through five layers of varying density, separately supported, packed fiberglass. The five individual layers are separated and supported by stainless steel wire screens. The screens are mounted on Amercoat-painted carbon steel frames and wired to support pipes spaced at 0.9-m intervals. The prefilter frame is attached to Unistrut embedded in the concrete walls; voids in the Unistrut and other openings are caulked with fiberglass to prevent bypassing of the filter medium.

Water spray systems are provided to flush particulates from the fiberglass deep-bed prefilters if the pressure drop becomes excessive. There are three spray lines, located at different elevations, to provide thorough washing of the filter medium.

Each of the three spray lines consists of five 1.2-cm diameter Type 304 stainless steel pipes; the bottom line is equipped with spray nozzles directed upward and the two upper lines have holes drilled in the lower portion of the pipes to supply flush water to the filter. To reduce water supply and removal requirements for flushing the ventilation air prefilter, flushing is done in sections. The spray system piping is stubbed off outside the ventilation air prefilter vault for later connection to a water supply, if required. The fiberglass deep-bed prefilters will not require replacement during the design lifetime of 20 years (from 1975). However, with the estimated dust loading in the ventilation air, the prefilter should last about 75 years without flushing or replacement.

Ventilation air from the prefilter is discharged through a concrete duct to the HEPA filters located in a building adjacent to the prefilter vault. The two-story reinforced concrete structure measures 23.5 x 10.1 and is 7.9 m high. The first story of the structure begins 2.4 m below grade.

The HEPA filters are 9.4 x 9.4 x 4.3 cm units, each rated at 42.5 m^3/min, with an initial pressure drop of 2.5 cm of water. The filters are housed in caissons for ease of maintenance and filter replacement.

From the HEPA filters, the ventilation air flows through three ventilation fans and is exhausted to the stack. The ventilation fans are direct drive and installed in parallel to provide the motive force for discharging the ventilation air to the stack. The fans are housed in a 6.6 x 14.6 m addition on the east side of the existing fan building (CPP-605). The fans are of carbon steel construction with backward airfoil blades. During normal operation, one or two of the three fans is operated on commercial power. If the operating fan fails during normal operation, the second and third fans can be started manually on commercial power. Automatic switching of an operating fan to emergency power, during commercial power outages, is provided by manual preselection. Each fan is provided with a damper that closes automatically if the fan stops. The dampers can be opened either with a wrench or via a pressurized N2 system if the need arises.

2.10.2 Basis for the Dose and Risk Assessment

2.10.2.1 Source Terms and Release Point Characterization

The total airborne releases, in Ci/y, from all sources during 1986 are listed in Table 2.10-1.

In modeling the site, all releases were assumed to be made from the ICPP, since this is the major source of uranium. The releases were assumed from a 1 m stack. Default particle sizes (1.00 AMAD) and solubility classes (Class W for antimony-125) were assumed.

2.10.2.2 Other Parameters Used in the Assessment

Meteorological data used in the assessment are from Pocatello, Idaho. The 0-80 km population distribution was produced using the computer code SECPOP and 1980 Census Bureau data. Nearby individuals were located 15,000 m from the assumed release point (Ho87). Food consumption rates appropriate to a rural location were used.

2.10.3 Results of the Dose and Risk Assessment

The major contributors to exposure are argon-41 (51 percent), antimony-125 (32 percent), and krypton-88 (8 percent). The predominant exposure pathways are air immersion for argon-41 and ground surface for antimony-125 and krypton-88.

Table 2.10-1. Radionuclides released to air during 1986 from all Idaho Facilities.

Nuclide	Release Rate (Ci/y)
Ar-41	1.9E+3
Ba-139	7.5E+0
Ba-140	1.8E-6
Br-82	1.0E-2
C-14	3.3E-1
Co-60	4.4E-4
Cs-134	1.0E-4
Cs-137	2.4E-3
Cs-138	9.4E-1
Gd-153	9.8E-6
H-3	3.6E+1
Hg-203	1.4E-4
I-129	1.8E-1
I-131	7.4E-4
Kr-85	1.1E+4
Kr-85m	7.1E+1
Kr-87	1.5E+2
Kr-88	1.6E+2
La-140	1.8E-6
Mn-54	8.7E-5
Nb-95	5.2E-7
Pu-238	1.6E-5
Ru-103	2.0E-7
Sb-125	9.3E-1
Se-75	1.1E-4
Sr-85	3.2E-8
Sr-90	1.9E-6
Te-132	6.0E-8
Xe-133	5.2E+2
Xe-135	4.1E+2
Xe-135m	3.2E+0
Xe-138	4.1E+2
Y-90	3.1E-8

The results of the dose and risk assessment are presented in Tables 2.10-2 through 2.10-4. Table 2.10-2 presents the doses received by nearby individuals and the regional population. Doses to organs accounting for 10 percent or more of the risk are presented. Table 2.10-3 presents the estimated lifetime fatal cancer risk to nearby individuals with maximum exposure, as well as estimated deaths per year in the regional population. Table 2.10-4 presents the estimated distribution of fatal cancer risk to the regional population.

Table 2.10-2. Estimated radiation dose rates from the Idaho National Engineering Laboratory.

Organ	Nearby Individuals (mrem/y)	Regional Population (person-rem/y)
Gonads	2.9E-2	7.3E-2
Remainder	2.3E-2	6.3E-2
Breast	2.7E-2	6.8E-2
Lungs	2.4E-2	6.1E-2
Red marrow	2.3E-2	5.7E-2

Table 2.10-3. Estimated fatal cancer risks from the Idaho National Engineering Laboratory.

Nearby Individuals Lifetime Fatal Cancer Risk	Regional (0-80 km) Population Deaths/y
6E-7	2E-5

Table 2.10-4. Estimated distribution of the fatal cancer risk to the regional (0-80 km) population from INEL facilities.

Risk Interval	Number of Persons	Deaths/y
1E-1 - 1E+0	0	0
1E-2 - 1E-1	0	0
1E-3 - 1E-2	0	0
1E-4 - 1E-3	0	0
1E-5 - 1E-4	0	0
1E-6 - 1E-5	0	0
< 1E-6	100,000	2E-5
Totals	100,000	2E-5

2.11 LAWRENCE BERKELEY LABORATORY

2.11.1 Description and Existing Controls

2.11.1.1 Site Description

Lawrence Berkeley Laboratory (LBL) is situated upon a hillside above the main campus of the University of California, Berkeley. The 130-acre site is located on the west-facing slope

of the Berkeley Hills, at elevations ranging from 500 to 1,500 feet above sea level. LBL is located in an urban environment on land owned by the University. The LBL site is bordered on the north by predominately single family homes and on the west by multiunit dwellings, student residence halls, and commercial districts. The population within an 80-km radius of the Laboratory is approximately 5.2 million (1980 census).

The Laboratory's activities are located both onsite and offsite. There are 67 buildings on the LBL hillside site, plus additional facilities located on the University campus, notably the Donner Laboratory of Biology and Medicine and the Melvin Calvin Laboratory. The onsite space consists of 1,350,000 gross square feet (gsf) in about 60 buildings: 1,307,000 in DOE buildings and trailers and 43,000 in University-owned buildings.

These facilities include four large accelerators, several small accelerators, several radiochemical laboratories, and the Tritium Labeling Laboratory. The large accelerators include the Bevatron, the Super HILAC, the 224-cm Sector-Focused Cyclotron, and the 467-cm Cyclotron.

The tritium facility was designed to accommodate kilocurie quantities of tritium as a labeling agent for chemical and biomedical research. Radiochemical and radiobiological studies in many laboratories typically use millicurie quantities of various radionuclides.

2.11.1.2 Major Release Points and Existing Emission Control Technology

Each laboratory box exhaust system includes a group of HEPA filters and/or gas traps. The tritium facility has a tritium recovery system in which unused tritium gas is circulated over hot copper oxide and the resultant water is trapped in a liquid nitrogen dewar, drained from the system, and packaged for disposal. This recovery system can be isolated from the labeling and storage system, and the tritium can be circulated continuously in a closed loop until the tritium concentration has dropped to an acceptable level for discharge to the atmosphere via the laboratory exhaust manifold. Silica gel traps are used to reduce the level of tritium discharged.

The purge ventilation system of the LBL tritium facility consists of an air evacuation system that draws air through inside filters into a vent pipe to the outside of the facility where it then undergoes mechanical forcing. This forcing vents the air through a vertical exhaust stack elevated 9 m above a hill directly behind the facility, giving an effective stack height of 18.3 m.

2.11.2 Basis for the Dose and Risk Assessment

2.11.2.1 Source Terms and Release Point Characterization

The total airborne releases, in Ci/y, from all sources during 1986 are listed in Table 2.11-1.

Table 2.11-1. Radionuclides released to air during 1986 from Lawrence Berkeley Laboratory.

Nuclide	Release Rate (Ci/y)
H-3	7.6E+1
I-125	3.7E-3
I-131	1.2E-3
Pu-239	7.4E-9
Sr-90	5.8E-5

In modeling the site, all releases were assumed to be made from a 10-m stack. Default particle sizes (1.00 AMAD) and solubility classes were assumed.

2.11.2.2 Other Parameters Used in the Assessment

Meteorological data used in the assessment are from Oakland, California. The 0-80 km population distribution was produced using the computer code SECPOP and 1980 Census Bureau data. Nearby individuals were located 250 m from the assumed release point (Sc87). Food consumption rates appropriate to an urban location were used.

2.11.3 Results of the Dose and Risk Assessment

The major contributor to exposure is tritium (90 percent). The predominant exposure pathway is inhalation.

The results of the dose and risk assessment are presented in Tables 2.11-2 through 2.11-4. Table 2.11-2 presents the doses received by nearby individuals and the regional population. Doses to organs accounting for 10 percent or more of the risk are presented. Table 2.11-3 presents the estimated lifetime fatal cancer risk to nearby individuals with maximum exposure, as well as estimated deaths per year in the regional population. Table 2.11-4 presents the estimated distribution of fatal cancer risk to the regional population.

Table 2.11-2. Estimated radiation dose rates from the Lawrence Berkeley Laboratory.

Organ	Nearby Individuals (mrem/y)	Regional Population (person-rem/y)
Remainder	1.9E-2	7.8E-1
Gonads	1.8E-2	7.0E-1
Red marrow	2.5E-2	1.0E+0
Breast	1.8E-2	7.0E-1
Lungs	1.8E-2	7.0E-1

Table 2.11-3. Estimated fatal cancer risks from the Lawrence Berkeley Laboratory.

Nearby Individuals Lifetime Fatal Cancer Risk	Regional (0-80 km) Population Deaths/year
5E-7	3E-4

Table 2.11-4. Estimated distribution of the fatal cancer risk to the regional (0-80 km) population from the Lawrence Berkeley Laboratory.

Risk Interval	Number of Persons	Deaths/y
1E-1 - 1E+0	0	0
1E-2 - 1E-1	0	0
1E-3 - 1E-2	0	0
1E-4 - 1E-3	0	0
1E-5 - 1E-4	0	0
1E-6 - 1E-5	0	0
< 1E-6	5,000,000	3E-4
Totals	5,000,000	3E-4

2.12 PADUCAH GASEOUS DIFFUSION PLANT

2.12.1 Site Description

The DOE operation at the Paducah Gaseous Diffusion Plant consists of a uranium enrichment facility and a uranium hexafluoride manufacturing complex. The plant is located 6 km south of the Ohio River in McCrasken County, Kentucky.

The primary activity at this site is the diffusion cascade for the enrichment of uranium in fissionable uranium-235 content. All stages of the enrichment cascade take place in five buildings on the site. The manufacturing facility produces uranium hexafluoride from uranium oxide feedstocks.

2.12.2 Basis for the Dose and Risk Assessment

2.12.2.1 Source Terms and Release Point Characterization

The total airborne releases, in Ci/y, from all sources during 1986 are listed in Table 2.12-1.

Table 2.12-1. Radionuclides released to air during 1986 from Paducah Gaseous Diffusion Plant.

Nuclide	Release Rate (Ci/y)
Tc-99	8.8E -3
U-234	1.8E -4
U-238	1.8E -4

In modeling the site, all releases were assumed to be made from a 10-m stack, with a flow of 200 cfm. Default particle sizes (1.00 AMAD) and solubility classes (Class Y for uranium-234 and uranium-238) were assumed.

2.12.2.2 Other Parameters Used in the Assessment

Meteorological data used in the assessment are from Paducah/Barkley, Kentucky. The 0-80 km population distribution was produced using the computer code SECPOP and 1980 Census Bureau data. Nearby individuals were located 1,500 m from the assumed release point (Mo86). Rural food consumption rates were used.

2.12.3 Results of the Dose and Risk Assessment

The major contributors to exposure are uranium-234 and uranium-238 (99 percent). The predominant exposure pathway for both is inhalation.

The results of the dose and risk assessment are presented in Tables 2.12-2 through 2.12-4. Table 2.12-2 presents the doses received by nearby individuals and the regional population. Doses to organs accounting for 10 percent or more of the risk are presented. Table 2.12-3 presents the estimated lifetime fatal cancer risk to nearby individuals with maximum exposure, as well as estimated deaths per year in the regional population. Table 2.12-4 presents the estimated distribution of fatal cancer risk to the regional population.

Table 2.12-2. Estimated radiation dose rates from the Paducah Gaseous Diffusion Plant.

Organ	Nearby Individuals (mrem/y)	Regional Population (person-rem/y)
Lungs	2.5E-1	3.1E-1

Table 2.12-3. Estimated fatal cancer risks from the Paducah Gaseous Diffusion Plant.

Nearby Individuals Lifetime Fatal Cancer Risk	Regional (0-80 km) Population Deaths/y
4E-7	1E-5

Table 2.12-4. Estimated distribution of the fatal cancer risk to the regional (0-80 km) population from the Paducah Gaseous Diffusion Plant.

Risk Interval	Number of Persons	Deaths/y
1E-1 - 1E+0	0	0
1E-2 - 1E-1	0	0
1E-3 - 1E-2	0	0
1E-4 - 1E-3	0	0
1E-5 - 1E-4	0	0
1E-6 - 1E-5	0	0
< 1E-6	500,000	1E-5
Totals	500,000	1E-5

2.13 LAWRENCE LIVERMORE LABORATORY

2.13.1 Site Description

The Lawrence Livermore National Laboratory, situated 64 km east of San Francisco, California, is primarily a nuclear weapons research and development center. Other activities, however, include research programs in laser isotope separation, laser fusion, magnetic fusion, biomedical studies, and nonnuclear energy.

Two accelerators, the Insulated Core Transfer Accelerator and the Electron Positron Linear Accelerator, are used in support

of the fusion and neutron physics research programs. The Light Isotope Handling Facility supports research in the area of light isotopes. The remaining facilities at this site deal with equipment decontamination and waste disposal.

2.13.2 Basis for the Dose and Risk Assessment

2.13.2.1 Source Terms and Release Point Characterization

The total airborne releases, in Ci/y, from all sources during 1986 are listed in Table 2.13-1.

Table 2.13-1. Radionuclides released to air during 1986 from Lawrence Livermore Laboratory/Sandia Livermore.

Nuclide	Release Rate (Ci/y)
H-3	1.8E+3
N-13	9.0E+1
O-15	9.0E+1
Pu-239	7.0E-9
Sr-90	1.3E-7

In modeling the site, all releases were assumed to be made from a 10-m stack. Default particle sizes (1.00 AMAD) and solubility classes were assumed.

2.13.2.2 Other Parameters Used in the Assessment

Meteorological data used in the assessment are from Fairfield/Travis, California. The 0-80 km population distribution was produced using the computer code SECPOP and 1980 Census Bureau data. Nearby individuals were located 3,500 m from the assumed release point (Mo86). Food consumption rates appropriate to a rural location were used.

2.13.3 Results of the Dose and Risk Assessment

The major contributor to exposure is tritium (98 percent). The predominant exposure pathway is inhalation.

The results of the dose and risk assessment are presented in Tables 2.13-2 through 2.13-4. Table 2.13-2 presents the doses received by nearby individuals and the regional population. Doses to organs accounting for 10 percent or more of the risk are presented. Table 2.13-3 presents the estimated lifetime fatal cancer risk to nearby individuals with maximum exposure, as well as estimated deaths per year in the regional population. Table 2.13-4 presents the estimated distribution of fatal cancer risk to the regional population.

Table 2.13-2. Estimated radiation dose rates from Lawrence Livermore Laboratory/Sandia Livermore.

Organ	Nearby Individuals (mrem/y)	Regional Population (person-rem/y)
Remainder	1.1E-2	4.2E+0
Gonads	1.1E-2	3.7E+0
Breast	1.1E-2	3.7E+0
Lungs	1.1E-2	3.8E+0
Red marrow	1.1E-2	3.7E+0

Table 2.13-3. Estimated fatal cancer risks from Lawrence Livermore Laboratory/Sandia Livermore.

Nearby Individuals Lifetime Fatal Cancer Risk	Regional (0-80 km) Population Deaths/y
3E-7	1E-3

Table 2.13-4. Estimated distribution of the fatal cancer risk to the regional (0-80 km) population from Lawrence Livermore Laboratory/Sandia Livermore.

Risk Interval	Number of Persons	Deaths/y
1E-1 - 1E+0	0	0
1E-2 - 1E-1	0	0
1E-3 - 1E-2	0	0
1E-4 - 1E-3	0	0
1E-5 - 1E-4	0	0
1E-6 - 1E-5	0	0
< 1E-6	5,300,000	1E-3
Totals	5,300,000	1E-3

2.14 PORTSMOUTH GASEOUS DIFFUSION PLANT

2.14.1 Description and Existing Controls

2.14.1.1 Site and Release Point Description

The Portsmouth Gaseous Diffusion Plant, situated in Pike County, Ohio, about 1.6 km east of the Scioto River, is operated

by Goodyear Atomic Corporation. The primary activity at this site is the diffusion cascade for the enrichment of uranium in fissionable uranium-235 content. All stages of the enrichment cascade take place in five buildings on the site. The manufacturing facility produces uranium hexafluoride from uranium oxide feedstocks.

The most significant release point, which accounts for about 84 percent of total emissions, is the X-326 Top Purge Vent.

The DOE Effluent Information System Report for 1986 identifies the following major specific sources for the Portsmouth Plant: the X-326 Building Top and Side Purge Vent, the X-330 Building Cold Recovery Facility, and the X-333 Building Cold Recovery Facility (EIS86).

The radioisotopes in these releases are uranium and its daughters plus technetium-99, a long-lived fission product. The technetium-99 results from introducing uranium feed from reprocessed irradiated nuclear reactor fuel.

2.14.1.2 Emission Control Technology

The main control technologies presently used at Portsmouth are:

- Cold trapping (the UF6 is removed by freezing)
- Sodium fluoride absorption
- Activated alumina absorption

These methods are primarily useful in preventing the release of uranium. They are also effective on uranium decay daughters and on the fission-product isotope technetium-99.

The X-326 Purge Vent is the major source of radionuclide emissions to the atmosphere at Portsmouth. The existing control device is the purge cascade itself, which removes the bulk of the UF_6. The remaining light gases are sent through an alumina trap and diluted with an air jet exhauster before venting.

There are four purge vents. Each vent is 23 m high, 47 cm apart. The diameter of each vent is 10 cm. Each vent has a flow rate of 4.72 x 10-2 m^3/s at ambient temperature.

2.14.2 <u>Basis for the Dose and Risk Assessment</u>

2.14.2.1 Source Terms and Release Point Characterization

The total airborne releases, in Ci/y, from all sources during 1986 are listed in Table 2.14-1.

Table 2.14-1. Radionuclides released to air during 1986 from the Portsmouth Gaseous Diffusion Plant.

Nuclide	Release Rate (Ci/y)
Pa-234m	1.4E-2
Tc-99	1.2E-1
Th-234	1.4E-2
U-234	2.3E-2
U-235	1.2E-3
U-236	3.4E-5
U-238	1.4E-2

In modeling the site, all releases were assumed to be made from a 10-m stack. Default particle sizes (1.00 AMAD) were assumed, and the uranium was assumed to have a D solubility class.

2.14.2.2 Other Parameters Used in the Assessment

Meteorological data used in the assessment are from Huntington, West Virginia. The 0-80 km population distribution was produced using the computer code SECPOP and 1980 Census Bureau data. Nearby individuals were located 1,500 m from the assumed release point (Oa87a). Food consumption rates appropriate to a rural location were used.

2.14.3 Results of the Dose and Risk Assessment

The major contributors to exposure are uranium-234 and uranium-238 (96 percent). The predominant exposure pathway for both is inhalation.

The results of the dose and risk assessment are presented in Tables 2.14-2 through 2.14-4. Table 2.14-2 presents the doses received by nearby individuals and the regional population. Doses to organs accounting for 10 percent or more of the risk are presented. Table 2.14-3 presents the estimated lifetime fatal cancer risk to nearby individuals with maximum exposure, as well as estimated deaths per year in the regional population. Table 2.14-4 presents the estimated distribution of fatal cancer risk to the regional population.

Table 2.14-2. Estimated radiation dose rates from the Portsmouth Gaseous Diffusion Plant.

Organ	Nearby Individuals (mrem/y)	Regional Population (person-rem/y)
Endosteum	3.4E-1	5.7E+0
Remainder	3.0E-2	7.7E-1
Red marrow	2.3E-2	4.0E-1

Table 2.14-3. Estimated fatal cancer risks from the Portsmouth Gaseous Diffusion Plant.

Nearby Individuals Lifetime Fatal Cancer Risk	Regional (0-80 km) Population Deaths/y
2E-7	9E-5

Table 2.14-4. Estimated distribution of the fatal cancer risk to the regional (0-80 km) population from the Portsmouth Gaseous Diffusion Plant.

Risk Interval	Number of Persons	Deaths/y
1E-1 - 1E+0	0	0
1E-2 - 1E-1	0	0
1E-3 - 1E-2	0	0
1E-4 - 1E-3	0	0
1E-5 - 1E-4	0	0
1E-6 - 1E-5	0	0
< 1E-6	620,000	9E-5
Totals	620,000	9E-5

2.15 ARGONNE NATIONAL LABORATORY

2.15.1 Site Description

Argonne National Laboratory is an energy research and development center that performs investigations in basic physics, chemistry, materials science, the environmental sciences, and biomedicine. Argonne also plays an important role as a nuclear and nonnuclear engineering center. The laboratory complex is located in Dupage County, Illinois, 43 km southwest of Chicago.

Argonne National Laboratory has the following principal nuclear facilities:

(1) 10- and 200-kW research reactors
(2) A critical assembly reactor
(3) A 60-inch cyclotron
(4) A prototype, superconducting, heavy ion linear accelerator
(5) Van de Graaff and Dynamitron-type charged-particle accelerators
(6) A high-energy neutron source
(7) Cobalt-60 irradiation sources
(8) Laboratories engaged in work with multicurie quantities of the actinide elements

The 200-kW JANUS research reactor and the laboratory handling area (hot cells) are the main sources of radionuclide releases from the Argonne complex.

Specific details of the site activities and emissions are available from annual emission reports prepared by the laboratory, the DOE Effluent Information System, and environmental monitoring studies conducted by DOE (Mo84, EPA84, EIS86).

2.15.2 Basis for the Dose and Risk Assessment

2.15.2.1 Source Terms and Release Point Characterization

The total airborne releases, in Ci/y, from all sources during 1986 are listed in Table 2.15-1.

Table 2.15-1. Radionuclides released to air during 1986 from Argonne National Laboratory.

Nuclide	Release Rate (Ci/y)
Ar-41	1.4E+0
C-11	9.0E+1
Cs-134	2.0E-7
Cs-137	4.9E-7
H-3	5.0E+1
I-129	1.6E-5
I-131	1.5E-6
Kr-85	1.7E+0
Nb-95	1.5E-8
Pu-239	5.6E-9
Rn-220	7.0E+3
Sb-125	3.4E-5
Zr-95	7.5E-9

In modeling the site, all releases were assumed to be made from a 10-m stack. Default particle sizes (1.00 AMAD) and solubility classes (Class D for carbon-11) were assumed.

2.15.2.2 Other Parameters Used in the Assessment

Meteorological data used in the assessment are from Midway Airport, Illinois. The 0-80 km population distribution was produced using the computer code SECPOP and 1980 Census Bureau data.Nearby individuals were located 750 m from the assumed release point. Urban food consumption rates were used.

2.15.3 Results of the Dose and Risk Assessment

The major contributors to exposure are carbon-11 and tritium. The predominant exposure pathway is inhalation for carbon-11 and air immersion for tritium.

The results of the dose and risk assessment are presented in Tables 2.15-2 through 2.15-4. Table 2.15-2 presents the doses received by nearby individuals and the regional population. Doses to organs accounting for 10 percent or more of the risk are presented. Table 2.15-3 presents the estimated lifetime fatal cancer risk to nearby individuals with maximum exposure, as well as estimated deaths per year in the regional population. Table 2.15-4 presents the estimated distribution of fatal cancer risk to the regional population.

Table 2.15-2. Estimated radiation dose rates from the Argonne National Laboratory.

Organ	Nearby Individuals (mrem/y)	Regional Population (person-rem/y)
Lungs	3.1E-2	2.5E-1
Remainder	2.7E-3	2.1E-1

Table 2.15-3. Estimated fatal cancer risks from the Argonne National Laboratory.

Nearby Individuals Lifetime Fatal Cancer Risk	Regional (0-80 km) Population Deaths/y
1E-7	8E-5

Table 2.15-4. Estimated distribution of the fatal cancer risk to the regional (0-80 km) population from the Argonne National Laboratory.

Risk Interval	Number of Persons	Deaths/y
1E-1 - 1E+0	0	0
1E-2 - 1E-1	0	0
1E-3 - 1E-2	0	0
1E-4 - 1E-3	0	0
1E-5 - 1E-4	0	0
1E-6 - 1E-5	0	0
< 1E-6	7,900,000	8E-5
Totals	7,900,000	8E-5

2.16 PINELLAS PLANT

2.16.1 Site Description

The Pinellas Plant, located 10 km northwest of St. Petersburg, Florida, is a major facility engaged in the production of nuclear weapons. Although descriptions of the principal operations resulting in atmospheric releases of radioactive materials could not be found in the literature, they are neutron generator development and production, testing, and laboratory operations. Small, sealed plutonium capsules are used as heat sources in the manufacture of radioisotopic thermoelectric generators. The heat sources are triple-encapsulated to prevent release of plutonium to the atmosphere.

Emissions of radionuclides were identified from three sources: the main stack, laboratory stack, and building stack.

2.16.2 Basis for the Dose and Risk Assessment

2.16.2.1 Source Terms and Release Point Characterization

The total airborne releases, in Ci/y, from all sources during 1986 are listed in Table 2.16-1.

Table 2.16-1. Radionuclides released to air during 1986 from Pinellas Plant.

Nuclide	Release Rate (Ci/y)
H-3	1.9E+2
Kr-85	4.6E+0

In modeling the site, all releases were assumed to be made from a 10-m stack.

2.16.2.2 Other Parameters Used in the Assessment

Meteorological data used in the assessment are from Tampa, Florida. The 0-80 km population distribution was produced using the computer code SECPOP and 1980 Census Bureau data. Nearby individuals were located 1,500 m from the assumed release point. Food consumption rates appropriate to a rural location were used.

2.16.3 Results of the Dose and Risk Assessment

The major contributor to exposure is tritium (100 percent). The predominant exposure pathway is inhalation.

The results of the dose and risk assessment are presented in Tables 2.16-2 through 2.16-4. Table 2.16-2 presents the dosesreceived by nearby individuals and the regional population. Doses to organs accounting for 10 percent or more of the risk are presented. Table 2.16-3 presents the estimated lifetime fatal cancer risk to nearby individuals with maximum exposure, as well as estimated deaths per year in the regional population. Table 2.16-4 presents the estimated distribution of fatal cancer risk to the regional population.

Table 2.16-2. Estimated radiation dose rates from the Pinellas Plant.

Organ	Nearby Individuals (mrem/y)	Regional Population (person-rem/y)
Remainder	4.7E-3	5.3E-1
Gonads	4.4E-3	4.7E-1
Breast	4.4E-3	4.7E-1
Lungs	4.4E-3	4.7E-1
Red marrow	4.3E-3	4.7E-1

Table 2.16-3. Estimated fatal cancer risks from the Pinellas Plant.

Nearby Individuals Lifetime Fatal Cancer Risk	Regional (0-80 km) Population Deaths/y
1E-7	2E-4

Table 2.16-4.. Estimated distribution of the fatal cancer risk to the regional (0-80 km) population from the Pinellas Plant.

Risk Interval	Number of Persons	Deaths/y
1E-1 - 1E+0	0	0
1E-2 - 1E-1	0	0
1E-3 - 1E-2	0	0
1E-4 - 1E-3	0	0
1E-5 - 1E-4	0	0
1E-6 - 1E-5	0	0
< 1E-6	1,900,000	2E-4
Totals	1,900,000	2E-4

2.17 NEVADA TEST SITE

2.17.1 Site Description

The Nevada Test Site lies about 100 km northwest of Las Vegas, Nevada, in Nye County. This facility, which is part of DOE'sweapons research and development complex, is responsible for design, maintenance, and testing of nuclear weapons. Other activities at this site include development of new nuclear energy technologies and radioactive waste disposal.

Radionuclide emissions result primarily from underground tests of nuclear weapons. Sources of these releases include drill-back operations, tunnel ventilation, leakage of gases from underground test sites, and resuspension of contaminated soils.

2.17.2 Basis for the Dose and Risk Assessment

2.17.2.1 Source Terms and Release Point Characterization

The total airborne releases, in Ci/y, from all sources during 1986 are listed in Table 2.17-1.

In modeling the site, all releases were assumed to be made from a single point source, since the nearest individual is 70 km from the site (Mo86). The releases were assumed from a 10-m stack. Default particle sizes (1.00 AMAD) and solubility classes were assumed.

Table 2.17-1. Radionuclides released to air during 1986 from the Nevada Test Site.

Nuclide	Release Rate (Ci/y)
H-3	1.2E+2
I-131	2.4E+0
I-133	9.6E-6
Kr-85	4.3E+0
Xe-133	3.6E+4
Xe-133M	5.8E-2
Xe-135	4.1E-2

2.17.2.2 Other Parameters Used in the Assessment

Meteorological data used in the assessment are from Yucca Flats, Nevada. The 0-80 km population distribution was produced using the computer code SECPOP and 1980 Census Bureau data. Nearby individuals were located 70,000 m from the assumed release point. Food consumption rates appropriate to a rural location were used.

2.17.3 Results of the Dose and Risk Assessment

The major contributors to exposure are xenon-133 (81 percent) and tritium (10 percent). The predominant exposure pathways are air immersion and ingestion.

The results of the dose and risk assessment are presented in Tables 2.17-2 through 2.17-4. Table 2.17-2 presents the dosesreceived by nearby individuals and the regional population. Doses to organs accounting for 10 percent or more of the risk are presented. Table 2.17-3 presents the estimated lifetime fatal cancer risk to nearby individuals with maximum exposure as well as estimated deaths per year in the regional population. Table 2.17-4 presents the estimated distribution of fatal cancer risk to the regional population.

Table 2.17-2. Estimated radiation dose rates from the Nevada Test Site.

Organ	Nearby Individuals (mrem/y)	Regional Population (person-rem/y)
Gonads	5.3E-3	1.2E-2
Remainder	3.5E-3	8.1E-3
Breast	6.5E-3	1.5E-2
Thyroid	1.9E-2	5.7E-2

Table 2.17-3. Estimated fatal cancer risks from the Nevada Test Site.

Nearby Individuals Lifetime Fatal Cancer Risk	Regional (0-80 km) Population Deaths/y
1E-7	3E-6

Table 2.17-4. Estimated distribution of the fatal cancer risk to the regional (0-80 km) population from the Nevada Test Site.

Risk Interval	Number of Persons	Deaths/y
1E-1 - 1E+0	0	0
1E-2 - 1E-1	0	0
1E-3 - 1E-2	0	0
1E-4 - 1E-3	0	0
1E-5 - 1E-4	0	0
1E-6 - 1E-5	0	0
< 1E-6	3,500	3E-6
Totals	3,500	3E-6

2.18 KNOLLS LABORATORY - KESSELRING

2.18.1 Site Description

The Kesselring site, occupying a 1,579-ha site, is located near West Milton, New York, approximately 27 km north of Schenectady. The surrounding area is rural and sparsely populated; about 1.08 million people live within 80 km.

The Kesselring site has four pressurized water reactor plants and associated support facilities used for training. Particulate and gaseous activity contained in the primary coolant may become airborne from reactor coolant discharges and sampling operations and during laboratory operations.

At the Kesselring site, exhaust air from reactor coolant discharges, sampling, and laboratory operations is passed through HEPA filters, monitored, and released from elevated stacks.

2.18.2 Basis for the Dose and Risk Assessment

2.18.2.1 Source Terms and Release Point Characterization

The total airborne releases, in Ci/y, from all sources during 1986 are listed in Table 2.18-1.

Table 2.18-1. Radionuclides released to air during 1986 from Knolls Atomic Power Lab-Kesselring.

Nuclide	Release Rate (Ci/y)
Ar-41	1.6E-1
C-14	3.4E-1
Co-60	3.4E-6
H-3	8.0E-2
Kr-83m	7.0E-4
Kr-85	2.0E-6
Kr-85m	2.0E-3
Kr-87	1.9E-3
Kr-88	4.0E-3
Xe-131m	9.2E-4
Xe-133	2.2E-2
Xe-135	2.3E-2

In modeling the site, all releases were assumed to be made from a 10-m stack. Default particle sizes (1.00 AMAD) and solubility classes (Class Y for cobalt-60) were assumed.

2.18.2.2 Other Parameters Used in the Assessment

Meteorological data used in the assessment are from Albany/CO, New York. The 0-80 km population distribution was produced using the computer code SECPOP and 1980 Census Bureau data. Nearby individuals were located 250 m from the assumed release point (Mo86). Food consumption rates appropriate to an urban location were used.

2.18.3 Results of the Dose and Risk Assessment

The major contributors to exposure are argon-41 (69 percent), cobalt-60 (12 percent), and carbon-14 (7 percent). The predominant exposure pathways are air immersion for argon-41 and cobalt-60, and ground surface for carbon-14.

The results of the dose and risk assessment are presented in Tables 2.18-2 through 2.18-4. Table 2.18-2 presents the doses received by nearby individuals and the regional population. Doses to organs accounting for 10 percent or more of the risk are presented. Table 2.18-3 presents the estimated lifetime fatal cancer risk to nearby individuals with maximum exposure, as well as estimated deaths per year in the regional population. Table 2.18-4 presents the estimated distribution of fatal cancer risk to the regional population.

Table 2.18-2. Estimated radiation dose rates from the Knolls Lab-Kesselring.

Organ	Nearby Individuals (mrem/y)	Regional Population (person-rem/y)
Gonads	2.5E-3	1.5E-2
Remainder	3.8E-3	3.2E-2
Breast	4.4E-3	3.7E-2
Red marrow	6.9E-3	6.5E-2
Lungs	2.5E-3	1.8E-2

Table 2.18-3. Estimated fatal cancer risks from the Knolls Lab-Kesselring.

Nearby Individuals Lifetime Fatal Cancer Risk	Regional (0-80 km) Population Deaths/y
1E-7	2E-5

Table 2.18-4. Estimated distribution of the fatal cancer risk to the regional (0-80 km) population from Knolls Atomic Power Lab-Kesselring.

Risk Interval	Number of Persons	Deaths/y
1E-1 - 1E+0	0	0
1E-2 - 1E-1	0	0
1E-3 - 1E-2	0	0
1E-4 - 1E-3	0	0
1E-5 - 1E-4	0	0
1E-6 - 1E-5	0	0
< 1E-6	1,200,000	2E-5
Totals	1,200,000	2E-5

2.19 BATTELLE COLUMBUS LABORATORY

2.19.1 Site Description

Battelle Columbus Laboratory (BCL) conducts various NRC-licensed activities, as well as activities under Department of Energy contracts (Sw87).

BCL operates two complexes in the Columbus Ohio, area. The first site is the King Avenue Site, which consists of 4 ha near a residential area in Columbus. The Ohio State University intramural sports practice field borders the site to the north.

The second site is the Nuclear Sciences Area of the West Jefferson site, which is located about 27 km west of the King Avenue laboratories. This site occupies about 5 ha on a 405-ha tract of land. Approximately 1.5 million people live within 80 km of the laboratory.

The King Avenue site has a uranium-235 processing facility located within Building 3. This building also houses the melting facility and powder metallurgy laboratory. The uranium processing facility manages all transactions involving nuclear material at the King Avenue site. However, handling of contract and licensed material has been very limited since 1977, and monitoring of airborne emissions was discontinued in 1975.

At the West Jefferson site, activities at the Nuclear Sciences Area include operations in the JN-1 hot cell (where irradiated reactor fuel elements are studied) and materials accountability and storage operations, conducted at the JN-2 vault. The JN-4 plutonium laboratory, where research was conducted on uranium-235/plutonium-239 nitride reactor fuel, is being decommissioned.

2.19.2 Basis for the Dose and Risk Assessment

2.19.2.1 Source Terms and Release Point Characterization

The total airborne releases, in Ci/y, from all sources during 1986 are listed in Table 2.19-1.

In modeling the site, all releases were assumed to be made from a 10-m stack. Default particle sizes (1.00 AMAD) and solubility classes (Class D for K-40, Class Y for uranium-235 and plutonium-239) were assumed.

2.19.2.2 Other Parameters Used in the Assessment

Meteorological data used in the assessment are from Columbus, Ohio. The 0-80 km population distribution was produced using the computer code SECPOP and 1980 Census Bureau data. Nearby individuals were located 750 m from the assumed release point (Mo86). Food consumption rates appropriate to an urban location were used.

Table 2.19-1. Radionuclides released to air during 1986 from Battelle Columbus.

Nuclide	Release Rate (Ci/y)
Ac-228	1.0E-5
Be-7	1.2E-5
Bi-214	2.4E-5
Co-57	1.4E-6
Co-60	3.7E-6
Cs-134	1.5E-6
Cs-137	3.0E-6
I-131	8.7E-7
K-40	3.0E-4
Kr-85	7.6E+0
Pb-212	3.0E-6
Pb-214	1.5E-5
Pu-239	4.0E-7
Sb-125	5.1E-6
Sr-90	5.8E-7
Tl-208	2.6E-6
U-235	2.6E-6

2.19.3 Results of the Dose and Risk Assessment

The major contributors to exposure are potassium-40 (61 percent), uranium-235 (24 percent), and plutonium-239 (10 percent). The predominant exposure pathways are ground surface for potassium-40 and inhalation for uranium-235 and plutonium-239.

The results of the dose and risk assessment are presented in Tables 2.19-2 through 2.19-4. Table 2.19-2 presents the doses received by nearby individuals and the regional population. Doses to organs accounting for 10 percent or more of the risk are presented. Table 2.19-3 presents the estimated lifetime fatal cancer risk to nearby individuals with maximum exposure, as well as estimated deaths per year in the regional population. Table 2.19-4 presents the estimated distribution of fatal cancer risk to the regional population.

2.20 FERMI NATIONAL LABORATORY

2.20.1 Site Description

The Fermi National Accelerator Laboratory is principally involved with basic research in high-energy physics. Another important activity involves the treatment of cancer patients with neutrons released by the second stage of the accelerator. The Fermi complex is located east of Batavia, Illinois, in the greater Chicago area.

Table 2.19-2. Estimated radiation dose rates from the Battelle Columbus Laboratory.

Organ	Nearby Individuals (mrem/y)	Regional Population (person-rem/y)
Lungs	3.1E-3	1.5E-2
Gonads	8.7E-4	6.2E-3
Remainder	7.2E-4	5.2E-3
Breast	7.8E-4	5.7E-3

Table 2.19-3. Estimated fatal cancer risks from the Battelle Columbus Laboratory.

Nearby Individuals Lifetime Fatal Cancer Risk	Regional (0-80 km) Population Deaths/y
2E-8	3E-6

Table 2.19-4. Estimated distribution of the fatal cancer risk to the regional (0-80 km) population from Battelle Columbus.

Risk Interval	Number of Persons	Deaths/y
1E-1 - 1E+0	0	0
1E-2 - 1E-1	0	0
1E-3 - 1E-2	0	0
1E-4 - 1E-3	0	0
1E-5 - 1E-4	0	0
1E-6 - 1E-5	0	0
< 1E-6	1,900,000	3E-6
Totals	1,900,000	3E-6

The accelerator at the Fermi Laboratory, a proton synchrotron, routinely operates at energies up to 400 GeV (billion electron volts). The proton beams produced in the accelerator are used in three different onsite experimental facilities: (1) the Meson area, (2) the Neutrino area, and (3) the Proton area. Radionuclides are produced in these areas and by the accelerator when either the proton beam itself or secondary particles interact with air.

Another source of radionuclides at Fermi Laboratory is a magnet-debonding oven, where failed magnets for the accelerator

are baked at high temperatures to break down the adhesives that help form the magnets.

2.20.2 Basis for the Dose and Risk Assessment

2.20.2.1 Source Terms and Release Point Characterization

The total airborne releases, in Ci/y, from all sources during 1986 are listed in Table 2.20-1.

Table 2.20-1. Radionuclides released to air during 1986 from Fermi National Accelerator Laboratory.

Nuclide	Release Rate (Ci/y)
C-11	3.4E+0
H-3	3.0E-3

In modeling the site, all releases were assumed to be made from a 10-m stack. Default particle sizes (1.00 AMAD) and solubility classes (Class D for C-11) were assumed.

2.20.2.2 Other Parameters Used in the Assessment

Meteorological data used in the assessment are from Midway Airport, Illinois. The 0-80 km population distribution was produced using the computer code SECPOP and 1980 Census Bureau data. Nearby individuals were located 1,500 m from the assumed release point (Ba87, Mo84). Food consumption rates appropriate to a rural location were used.

2.20.3 Results of the Dose and Risk Assessment

The major contributor to exposure is carbon-11 (100 percent). The predominant exposure pathway is air immersion.

The results of the dose and risk assessment are presented in Tables 2.20-2 through 2.20-4. Table 2.20-2 presents the doses received by nearby individuals and the regional population. Doses to organs accounting for 10 percent or more of the risk are presented. Table 2.20-3 presents the estimated lifetime fatal cancer risk to nearby individuals with maximum exposure, as well as estimated deaths per year in the regional population. Table 2.20-4 presents the estimated distribution of fatal cancer risk to the regional population.

Table 2.20-2. Estimated radiation dose rates from the Fermi National Laboratory.

Organ	Nearby Individuals (mrem/y)	Regional Population (person-rem/y)
Gonads	9.2E-4	4.1E-3
Remainder	7.1E-4	3.2E-3
Breast	8.6E-4	3.9E-3
Lungs	9.1E-4	4.1E-3
Red marrow	7.0E-4	3.2E-3

Table 2.20-3. Estimated fatal cancer risks from the Fermi National Laboratory.

Nearby Individuals Lifetime Fatal Cancer Risk	Regional (0-80 km) Population Deaths/y
2E-8	1E-6

Table 2.20-4. Estimated distribution of the fatal cancer risk to the regional (0-80 km) population from the Fermi National Laboratory.

Risk Interval	Number of Persons	Deaths/y
1E-1 - 1E+0	0	0
1E-2 - 1E-1	0	0
1E-3 - 1E-2	0	0
1E-4 - 1E-3	0	0
1E-5 - 1E-4	0	0
1E-6 - 1E-5	0	0
< 1E-6	7,700,000	1E-6
Totals	7,700,000	1E-6

2.21 SANDIA NATIONAL LABORATORY

2.21.1 Site Description

The operations at Sandia National Laboratories near Albuquerque, New Mexico, include weapons testing, arming and fusing nuclear weapons, and developing modifications to delivery systems (De87, Mo84). The major facilities include the Sandia Pulsed Reactor and the Annular Core Pulsed Reactor (both of which

are used to irradiate test materials) and the Relativistic Electron Beam Accelerator. Support facilities include the Neutron Generator Facility, the Tube Loading Facility, the Fusion Target Loading Facility, the Tritium Laboratory, and the Nondestructive Test Facility, all of which are located in Technical Areas (TA) I and V. TA-I, in the northwest corner of the site, also houses research and design laboratories. TA-III is the site of the Sandia low-level radioactive waste dump.

2.21.2 Basis for the Dose and Risk Assessment

2.21.2.1 Source Terms and Release Point Characterization

The total airborne releases, in Ci/yr, from all sources during 1986 are listed in Table 2.21-1.

Table 2.21-1. Radionuclides released to air during 1986 from Sandia National Laboratory/Lovelace Research Institute.

Nuclide	Release Rate (Ci/y)
Ar-41	5.5E+0
H-3	1.3E-1
Pb-212	8.5E-3

In modeling the site, all releases were assumed to be from a 10-m stack. Default particle sizes (1.00 AMAD) and solubility classes (Class D for lead-212) were assumed.

2.21.2.2 Other Parameters Used in the Assessment

Meteorological data used in the assessment are from Albuquerque/Sunpt, New Mexico. The 0-80 km population distribution was produced using the computer code SECPOP and 1980 Census Bureau data. Nearby individuals were located 3,500 m from the assumed release point. Urban food consumption rates were used.

2.21.3 Results of the Dose and Risk Assessment

The major contributors to exposure are argon-41 (74 percent) and lead-212 (26 percent). The predominant exposure pathways are air immersion for argon-41 and inhalation for lead-212.

The results of the dose and risk assessment are presented in Tables 2.21-2 through 2.21-4. Table 2.21-2 presents the doses received by nearby individuals and the regional population. Doses to organs accounting for 10 percent or more of the risk are presented. Table 2.21-3 presents the estimated lifetime fatal

cancer risk to nearby individuals with maximum exposure, as well as estimated deaths per year in the regional population. Table 2.21-4 presents the estimated distribution of fatal cancer risk to the regional population.

Table 2.21-2. Estimated radiation dose rates from the Sandia National Laboratory/Lovelace Research Institute.

Organ	Nearby Individuals (mrem/y)	Regional Population (person-rem/y)
Remainder	5.3E-4	1.9E-2
Gonads	5.9E-4	2.1E-2
Lungs	1.2E-3	4.9E-2
Breast	5.4E-4	1.9E-2
Red marrow	5.6E-4	2.1E-2

Table 2.21-3. Estimated fatal cancer risks from the Sandia National Laboratory/Lovelace Research Institute.

Nearby Individuals Lifetime Fatal Cancer Risk	Regional (0-80 km) Population Deaths/y
1E-8	8E-6

Table 2.21-4. Estimated distribution of the fatal cancer risk to the regional (0-80 km) population from the Sandia National Laboratory/Lovelace Research Institute.

Risk Interval	Number of Persons	Deaths/y
1E-1 - 1E+0	0	0
1E-2 - 1E-1	0	0
1E-3 - 1E-2	0	0
1E-4 - 1E-3	0	0
1E-5 - 1E-4	0	0
1E-6 - 1E-5	0	0
< 1E-6	500,000	8E-6
Totals	500,000	8E-6

2.22 BETTIS ATOMIC POWER LABORATORY

2.22.1 Site Description

The Bettis Atomic Power Laboratory is situated on an 0.8 km^2 tract in West Mifflin, Pennsylvania, approximately 12 km south of Pittsburgh. This facility designs and develops nuclear power reactors.

2.22.2 Basis for the Dose and Risk Assessment

2.22.2.1 Source Terms and Release Point Characterization

The total airborne releases, in Ci/y, from all sources during 1986 are listed in Table 2.22-1.

Table 2.22-1. Radionuclides released to air during 1986 from Bettis Atomic Power Laboratory.

Nuclide	Release Rate (Ci/y)
Co-60	1.7E-6
Cs-137	1.7E-6
I-129	1.8E-6
I-131	6.9E-6
Kr-85	9.4E-1
Rn-220	6.3E-2
Sb-125	3.1E-5
Sr-90	1.7E-6
U-234	6.0E-7
U-238	6.0E-7
Xe-131m	1.5E-4
Xe-133	3.8E-7

In modeling the site, all releases were assumed to be made from a 10-m stack. Default particle sizes (1.00 AMAD) and solubility classes (Class Y for uranium-234 and uranium-238, Class W for antimony-125) were assumed.

2.22.2.2 Other Parameters Used in the Assessment

Meteorological data used in the assessment are from Pittsburgh, Pennsylvania. The 0-80 km population distribution was produced using the computer code SECPOP and 1980 Census Bureau data. Nearby individuals were located 250 m from the assumed release point. Food consumption rates appropriate to a rural location were used.

2.22.3 Results of the Dose and Risk Assessment

The major contributors to exposure are uranium-234 and uranium-238 (69 percent) and antimony-125 (10 percent). The predominant exposure pathways are inhalation for uranium-234 and uranium-238, and ground surface for antimony-125.

The results of the dose and risk assessment are presented in Tables 2.22-2 through 2.22-4. Table 2.22-2 presents the doses received by nearby individuals and the regional population. Doses to organs accounting for 10 percent or more of the risk are presented. Table 2.22-5 presents the estimated lifetime fatal cancer risk to nearby individuals with maximum exposure, as well as estimated deaths per year in the regional population. Table 2.22-4 presents the estimated distribution of fatal cancer risk to the regional population.

Table 2.22-2. Estimated radiation dose rates from the Bettis Atomic Power Laboratory.

Organ	Nearby Individuals (mrem/y)	Regional Population (person-rem/y)
Lungs	4.3E-3	3.5E-2

Table 2.22-3. Estimated fatal cancer risks from the Bettis Atomic Power Laboratory.

Nearby Individuals Lifetime Fatal Cancer Risk	Regional (0-80 km) Population Deaths/y
1E-8	1E-6

Table 2.22-4. Estimated distribution of the fatal cancer risk to the regional (0-80 km) population from the Bettis Atomic Power Laboratory.

Risk Interval	Number of Persons	Deaths/y
1E-1 - 1E+0	0	0
1E-2 - 1E-1	0	0
1E-3 - 1E-2	0	0
1E-4 - 1E-3	0	0
1E-5 - 1E-4	0	0
1E-6 - 1E-5	0	0
< 1E-6	3,100,000	1E-6
TOTALS	3,100,000	1E-6

2.23 KNOLLS LAB - WINDSOR

2.23.1 Site Description

The Windsor site consists of only 4 ha near Windsor, Connecticut, about 8 km north of the city of Hartford. The area is a rural farming and industrial region along the Farmington River. Approximately 3.1 million people live within 80 km.

2.23.2 Basis for the Dose and Risk Assessment

2.23.2.1 Source Terms and Release Point Characterization

The total airborne releases, in Ci/y, from all sources during 1986 are listed in Table 2.23-1.

Table 2.23-1. Radionuclides released to air during 1986 from Knolls Atomic Power Lab-Windsor.

Nuclide	Release Rate (Ci/y)
Ar-41	7.8E-2
C-14	4.7E-2
Co-60	2.6E-7
H-3	1.1E-2
Kr-83M	5.1E-5
Kr-85	2.3E-7
Kr-85M	1.9E-4
Kr-87	1.4E-4
Kr-88	3.6E-4
Xe-131M	1.0E-5
Xe-133	1.9E-3
Xe-133M	6.6E-5
Xe-135	1.8E-3

In modeling the site, all releases were assumed to be made from a 10-m stack. Default particle sizes (1.00 AMAD) and solubility classes were assumed.

2.23.2.2 Other Parameters Used in the Assessment

Meteorological data used in the assessment are from Hartford/Bradley, Connecticut. The 0-80 km population distribution was produced using the computer code SECPOP and 1980 Census Bureau data. Nearby individuals were located 250 m from the assumed release point. Food consumption rates appropriate to a rural location were used.

2.23.3 Results of the Dose and Risk Assessment

The major contributor to exposure is argon-41 (93 percent). The predominant exposure pathway is air immersion.

The results of the dose and risk assessment are presented in Tables 2.23-2 through 2.23-4. Table 2.23-2 presents the doses received by nearby individuals and the regional population. Doses to organs accounting for 10 percent or more of the risk are presented. Table 2.23-3 presents the estimated lifetime fatal cancer risk to nearby individuals with maximum exposure, as well as estimated deaths per year in the regional population. Table 2.23-4 presents the estimated distribution of fatal cancer risk to the regional population.

Table 2.23-2. Estimated radiation dose rates from the Knolls Lab-Windsor.

Organ	Nearby Individuals (mrem/y)	Regional Population (person-rem/y)
Gonads	3.8E-4	2.3E-3
Remainder	3.0E-4	4.2E-3
Breast	3.5E-4	4.9E-3
Red marrow	3.0E-4	8.1E-3
Lungs	2.9E-4	2.5E-3

Table 2.23-3. Estimated fatal cancer risks from the Knolls Lab-Windsor.

Nearby Individuals Lifetime Fatal Cancer Risk	Regional (0-80 km) Population Deaths/y
8E-9	2E-6

Table 2.23-4. Estimated distribution of the fatal cancer risk to the regional (0-80 km) population from the Knolls Atomic Power Lab-Windsor.

Risk Interval	Number of Persons	Deaths/y
1E-1 - 1E+0	0	0
1E-2 - 1E-1	0	0
1E-3 - 1E-2	0	0
1E-4 - 1E-3	0	0
1E-5 - 1E-4	0	0
1E-6 - 1E-5	0	0
< 1E-6	3,200,000	2E-6
Totals	3,200,000	2E-6

2.24 ROCKY FLATS PLANT

2.24.1 Site Description

Activities at the Rocky Flats Plant, located in Jefferson County, Colorado, about 26 km from Denver, are restricted to fabrication and assembly of components for nuclear weapons and the support of these operations (Se88).

Fabrication operations include reduction rolling, blanking, forming, and heat treating. Assembly operations include cleaning, brazing, marking, welding, weighing, matching, sampling, heating, and monitoring. Solid residue generated during plutonium-related operations is recycled through one of two plutonium-recovery processes. Process selection depends on the purity and plutonium content of the residue. Both processes produce a plutonium nitrate solution from which the metal can be extracted. The recovered plutonium is returned to the storage vault for use in foundry operations. A secondary objective of the process is the recovery of americium-241.

Radionuclides are released from short stacks and building vents at this plant. Building 771, Main Plenum, was selected for comparison purposes and calculations. This point releases 54 percent of the plutonium-239 and -240 and 3 percent of the uranium-233, -234, and -235 emitted at Rocky Flats. The most significant release point for uranium is from a single duct in Building 883, which releases approximately 19 percent of the total uranium emissions from the plant.

2.24.2 Basis for the Dose and Risk Assessment

2.24.2.1 Source Terms and Release Point Characterization

The total airborne releases, in Ci/y, from all sources during 1986 are listed in Table 2.24-1.

In modeling the site, all releases were assumed to be made from a 10-m stack. Default particle sizes (1.00 AMAD) and solubility classes (Class Y for uranium-238, Class W for americium-241) were assumed.

Table 2.24-1. Radionuclides released to air during 1986 from Rocky Flats Plant.

Nuclide	Release Rate (Ci/y)
Am-241	4.8E-6
H-3	2.2E-1
Pu-233	1.7E-8
Pu-234	1.7E-8
Pu-238	9.8E-7
Pu-239	1.5E-5
Pu-240	1.5E-5
U-233	4.3E-6
U-234	4.3E-6
U-238	1.7E-5

2.24.2.2 Other Parameters Used in the Assessment

Meteorological data used in the assessment are from Denver/Stapleton, Colorado. The 0-80 km population distribution was produced using the computer code SECPOP and 1980 Census Bureau data. Nearby individuals were located 750 m from the assumed release point (Se88). Food consumption rates appropriate to a rural location were used.

2.24.3 Results of the Dose and Risk Assessment

The major contributors to exposure are uranium-238 (35 percent) and americium-241 (45 percent). The predominant exposure pathway is inhalation.

The results of the dose and risk assessment are presented in Tables 2.24-2 through 2.24-4. Table 2.24-2 presents the doses received by nearby individuals and the regional population. Doses to organs accounting for 10 percent or more of the risk are presented. Table 2.24-3 presents the estimated lifetime fatal cancer risk to nearby individuals with maximum exposure, as well as estimated deaths per year in the regional population. Table 2.24-4 presents the estimated distribution of fatal cancer risk to the regional population.

Table 2.24-2. Estimated radiation dose rates from the Rocky Flats Plant.

Organ	Nearby Individuals (mrem/y)	Regional Population (person-rem/y)
Lungs	6.3E-3	1.2E-1
Endosteum	1.6E-2	2.0E-1
Remainder	7.5E-4	9.3E-3

Table 2.24-3. Estimated fatal cancer risks from the Rocky Flats Plant.

Nearby Individuals Lifetime Fatal Cancer Risk	Regional (0-80 km) Population Deaths/y
1E-8	9E-6

Table 2.24-4. Estimated distribution of the fatal cancer risk to the regional (0-80 km) population from the Rocky Flats Plant.

Risk Interval	Number of Persons	Deaths/y
1E-1 - 1E+0	0	0
1E-2 - 1E-1	0	0
1E-3 - 1E-2	0	0
1E-4 - 1E-3	0	0
1E-5 - 1E-4	0	0
1E-6 - 1E-5	0	0
< 1E-6	1,900,000	9E-6
Totals	1,900,000	9E-6

2.25 PANTEX PLANT

2.25.1 Site Description

The Pantex Plant, located 30 km northeast of Amarillo, Texas, is a nuclear weapons assembly and disassembly plant. Because most radioactive materials handled during the assembly of nuclear weapons are contained in sealed vessels, normal operations involving these materials do not result in major releases of radionuclides (La88).

2.25.2 Basis for the Dose and Risk Assessment

2.25.2.1 Source Terms and Release Point Characterization

The total airborne releases, in Ci/y, from all sources during 1986 are listed in Table 2.25-1.

Table 2.25-1. Radionuclides released to air during 1986 from Pantex Plant.

Nuclide	Release Rate (Ci/y)
H-3	1.3E-1
U-238	1.0E-5

In modeling the site, all releases were assumed to be made from a 10-m stack. Default particle sizes (1.00 AMAD) and solubility classes (Class Y for uranium-238) were assumed.

2.25.2.2 Other Parameters Used in the Assessment

Meteorological data used in the assessment are from Amarillo, TX. The 0-80 km population distribution was produced using the computer code SECPOP and the 1980 Census Bureau data. Nearby individuals were located 1,500 m from the assumed release point (La88). Food consumption rates appropriate to a rural location were used.

2.25.3 Results of the Dose and Risk Assessment

The major contributor to exposure is uranium-238 (94 percent). The predominant exposure pathway is inhalation.

The results of the dose and risk assessment are presented in Tables 2.25-2 through 2.25-4. Table 2.25-2 presents the doses received by nearby individuals and the regional population. Doses to organs accounting for 10 percent or more of the risk are presented. Table 2.25-3 presents the estimated lifetime fatal cancer risk to nearby individuals with maximum exposure, as well as estimated deaths per year in the regional population. Table 2.25-4 presents the estimated distribution of fatal cancer risk to the regional population.

Table 2.25-2. Estimated radiation dose rates from the Pantex Plant.

Organ	Nearby Individuals (mrem/y)	Regional Population (person-rem/y)
Lungs	2.2E-3	3.5E-3

Table 2.25-3. Estimated fatal cancer risks from the Pantex Plant.

Nearby Individuals Lifetime Fatal Cancer Risk	Regional (0-80 km) Population Deaths/y
4E-9	7E-8

Table 2.25-4. Estimated distribution of the fatal cancer risk to the regional (0-80 km) population from the Pantex Plant.

Risk Interval	Number of Persons	Deaths/y
1E-1 - 1E+0	0	0
1E-2 - 1E-1	0	0
1E-3 - 1E-2	0	0
1E-4 - 1E-3	0	0
1E-5 - 1E-4	0	0
1E-6 - 1E-5	0	0
< 1E-6	260,000	7E-8
Totals	260,000	7E-8

2.26 KNOLLS LAB - KNOLLS

2.26.1 Site Description

Knolls Atomic Power Laboratory has facilities at three separate sites: Knolls, Kesselring, and Windsor. Development ofnuclear reactors and training of operating personnel are the major efforts at the Knolls Laboratory. The Knolls and Kesselring complexes are located near Schenectady, NY, and the Windsor site is near Windsor, Connecticut.

Operations at the Knolls site involving radioactive materials are serviced by controlled exhaust systems that

discharge through elevated stacks. Exhaust air is passed through HEPA and carbon filters and is continuously sampled prior to release. Small amounts of krypton-85 generated by examination of irradiated fuel are released in the exhaust stacks. Generation of argon-41 is minimized by controlling air leakage into the low-power critical assembly.

2.26.2 Basis for the Dose and Risk Assessment

2.26.2.1 Source Terms and Release Point Characterization

The total airborne releases, in Ci/y, from all sources during 1986 are listed in Table 2.26-1.

Table 2.26-1. Radionuclides released to air during 1986 from Knolls Atomic Power Lab-Knolls.

Nuclide	Release Rate (Ci/y)
Co-60	1.0E-6
I-131	3.7E-6
Kr-85	7.9E-1
Kr-85m	4.1E-3
Kr-87	5.8E-3
Kr-88	1.2E-2
Pu-238	1.3E-7
Sb-125	2.8E-5
Sn-113	1.3E-6
Sr-90	2.5E-5
U-234	3.3E-6
U-235	1.0E-7
U-236	6.6E-9
U-238	9.1E-10
Xe-131m	5.7E-7
Xe-133	1.4E-3
Xe-135	1.3E-2

In modeling the site, all releases were assumed to be made from a 10-m stack. Default particle sizes (1.00 AMAD) and solubility classes (Class Y for uranium-234) were assumed.

2.26.2.2 Other Parameters Used in the Assessment

Meteorological data used in the assessment are from Albany/CO, New York. The 0-80 km population distribution was produced using the computer code SECPOP and 1980 Census Bureau data. Nearby individuals were located 250 m from the assumed release point. Food consumption rates appropriate to an urban location were used.

2.26.3 Results of the Dose and Risk Assessment

The major contributor to exposure is uranium-234 (79 percent). The predominant exposure pathway is inhalation.

The results of the dose and risk assessment are presented in Tables 2.26-2 through 2.26-4. Table 2.26-2 presents the doses received by nearby individuals and the regional population. Doses to organs accounting for 10 percent or more of the risk are presented. Table 2.26-3 presents the estimated lifetime fatal cancer risk to nearby individuals with maximum exposure, as well as estimated deaths per year in the regional population. Table 2.26-4 presents the estimated distribution of fatal cancer risk to the regional population.

Table 2.26-2. Estimated radiation dose rates from the Knolls Lab-Knolls.

Organ	Nearby Individuals (mrem/y)	Regional Population (person-rem/y)
Lungs	1.7E-3	3.1E-2

Table 2.26-3. Estimated fatal cancer risks from the Knolls Lab-Knolls.

Nearby Individuals Lifetime Fatal Cancer Risk	Regional (0-80 km) Population Deaths/y
3E-9	1E-6

Table 2.26-4. Estimated distribution of the fatal cancer risk to the regional (0-80 km) population from the Knolls Atomic Power Lab-Knolls.

Risk Interval	Number of Persons	Deaths/y
1E-1 - 1E+0	0	0
1E-2 - 1E-1	0	0
1E-3 - 1E-2	0	0
1E-4 - 1E-3	0	0
1E-5 - 1E-4	0	0
1E-6 - 1E-5	0	0
< 1E-6	1,200,000	1E-6
Totals	1,200,000	1E-6

2.27 AMES LABORATORY

2.27.1 Site Description

Until 1978, the Ames Laboratory, which is operated by Iowa State University, was used as a neutron source for the production of byproduct materials and the neutron irradiation of various materials for research. The reactor was fueled with enriched uranium, moderated and cooled by heavy water, and operated continuously at 5,000 watts thermal. Operation of the Ames Laboratory Research Reactor was terminated on December 1, 1977. Decommissioning began January 3, 1978, and was completed on October 31, 1981. A waste processing and disposal facility still located at the site serves the campus reactor and research laboratories.

Prior to its decommissioning, the major airborne releases from the research reactor were tritium and argon-41. Tritium, the major radionuclide released during the 1981 decommissioning activities, was emitted from the 30-m reactor stack, which is 215 m from the nearest property boundary. Monitoring has indicated that no airborne emissions from the research laboratories have reached the main campus.

2.27.2 Basis for the Dose and Risk Assessment

2.27.2.1 Source Terms and Release Point Characterization

The total airborne releases, in Ci/y, from all sources during 1986 are listed in Table 2.27-1.

Table 2.27-1. Radionuclides released to air during 1986 from Ames Laboratory.

Nuclide	Release Rate (Ci/y)
H-3	7.6E-2

In modeling the site, all releases were assumed to be made from a 10-m stack.

2.27.2.2 Other Parameters Used in the Assessment

Meteorological data used in the assessment are from Waterloo, Iowa. The 0-80 km population distribution was produced using the computer code SECPOP and 1980 Census Bureau data. Nearby individuals were located 750 m from the assumed release point. Rural food consumption rates were used.

2.27.3 Results of the Dose and Risk Assessment

The major contributor to exposure is tritium (100 percent). The predominant exposure pathways are ingestion and inhalation.

The results of the dose and risk assessment are presented in Tables 2.27-2 through 2.27-4. Table 2.27-2 presents the doses received by nearby individuals and the regional population. Doses to organs accounting for 10 percent or more of the risk are presented. Table 2.27-3 presents the estimated lifetime fatal cancer risk to nearby individuals with maximum exposure, as well as estimated deaths per year in the regional population. Table 2.27-4 presents the estimated distribution of fatal cancer risk to the regional population.

Table 2.27-2. Estimated radiation dose rates from the Ames Laboratory.

Organ	Nearby Individuals (mrem/y)	Regional Population (person-rem/y)
Remainder	1.6E-5	2.3E-4
Gonads	1.3E-5	1.8E-4
Breast	1.3E-5	1.8E-4
Lungs	1.3E-5	1.8E-4
Red marrow	1.3E-5	1.8E-4

Table 2.27-3. Estimated fatal cancer risks from the Ames Laboratory.

Nearby Individuals Lifetime Fatal Cancer Risk	Regional (0-80 km) Population Deaths/y
4E-10	9E-8

Table 2.27-4. Estimated distribution of the fatal cancer risk to the regional (0-80 km) population from the Ames Laboratory.

Risk Interval	Number of Persons	Deaths/y
1E-1 - 1E+0	0	0
1E-2 - 1E-1	0	0
1E-3 - 1E-2	0	0
1E-4 - 1E-3	0	0
1E-5 - 1E-4	0	0
1E-6 - 1E-5	0	0
< 1E-6	680,000	9E-8
Totals	680,000	9E-8

2.28 ROCKETDYNE ROCKWELL

2.28.1 Site Description

Rockwell International operates two facilities, one near Los Angeles and one near Santa Susana, Calafornia. These facilities conduct research and development and also manufacture nuclear reactor components. The Los Angeles facility performs uranium fuel processing operations and conducts research involving gamma radiation. The Santa Susana facility uses neutron radiography to inspect nuclear reactor components. This facility also serves as a materials handling laboratory and waste processing operation for other DOE facilities.

Radionuclide emissions originate from the materials handling laboratory and the waste processing facilities at the Santa Susana site.

2.28.2 Basis for the Dose and Risk Assessment

2.28.2.1 Source Terms and Release Point Characterization

The total airborne releases, in Ci/y, from all sources during 1986 are listed in Table 2.28-1.

Table 2.28-1. Radionuclides released to air during 1986 from Rocketdyne Division, Rockwell International.

Nuclide	Release Rate (Ci/y)
Sr-90	1.3E-5

In modeling the site, all releases were assumed to be made from a 30-m stack. Default particle sizes (1.00 AMAD) and solubility classes (Class D for strontium-90) were assumed.

2.28.2.2 Other Parameters Used in the Assessment

Meteorological data used in the assessment are from Burbank, California. The 0-80 km population distribution was produced using the computer code SECPOP and 1980 Census Bureau data. Nearby individuals were located 250 m from the assumed release point. Food consumption rates appropriate to an urban location were used.

2.28.3 Results of the Dose and Risk Assessment

The major contributor to exposure is strontium-90 (100 percent). The predominant exposure pathway is inhalation.

The results of the dose and risk assessment are presented in Tables 2.28-2 through 2.28-4. Table 2.28-2 presents the doses received by nearby individuals and the regional population. Doses to organs accounting for 10 percent or more of the risk are presented. Table 2.28-3 presents the estimated lifetime fatal cancer risk to nearby individuals with maximum exposure, as well as estimated deaths per year in the regional population. Table 2.28-4 presents the estimated distribution of fatal cancer risk to the regional population.

Table 2.28-2. Estimated radiation dose rates from Rocketdyne Division, Rockwell International.

Organ	Nearby Individuals (mrem/y)	Regional Population (person-rem/y)
Red marrow	7.0E-6	1.4E-3
Endosteum	1.5E-5	3.2E-3

Table 2.28-3. Estimated fatal cancer risks from Rocketdyne Division, Rockwell International.

Nearby Individuals Lifetime Fatal Cancer Risk	Regional (0-80 km) Population Deaths/y
2E-11	7E-8

Table 2.28-4. Estimated distribution of the fatal cancer risk to the regional (0-80 km) population from Rocketdyne Division, Rockwell International.

Risk Interval	Number of Persons	Deaths/y
1E-1 - 1E+0	0	0
1E-2 - 1E-1	0	0
1E-3 - 1E-2	0	0
1E-4 - 1E-3	0	0
1E-5 - 1E-4	0	0
1E-6 - 1E-5	0	0
< 1E-6	8,800,000	7E-8
Totals	8,800,000	7E-8

2.29 REFERENCES

Ba87 Baker, Samuel I., "Site Environmental Report for Calendar Year 1986," Report 87/58, Fermi National Accelerator Laboratory, Batavia, IL, May 1987.

Ch88 Chew, Eddie W., and Mitchell, Russell, "1987 Environmental Monitoring Program Report for the Idaho National Engineering Laboratory Site," DOE/ID-12082(87), Idaho Operations Office, DOE, Idaho Falls, ID, May 1988.

De87 Devlin, T.K., "1986 Environmental Monitoring Report," SAND87-8210.UC-11, Sandia National Laboratories, Albuquerque, NM, April 1987.

EIS86 U.S. Department of Energy, "Effluent Information System, EPA Release Point Analysis Report for Calendar Year 1986," Environmental Guidance Division.

Em87 Emerson, Marjorie Martz, et al., "Environmental Surveillance at Los Alamos During 1986," LA-10992-ENV, Los Alamos National Laboratory, Los Alamos, NM, April 1987.

EPA84 U.S. Environmental Protection Agency, "Radionuclides: Background Information Document for Final Rules," Volume II, EPA 520/1-84-022-2, Washington, DC, October 1984.

Gu88 Gunderson, Thomas, et al., "Environmental Surveillance at Los Alamos During 1987," LA-11306-ENV, Los Alamos National Laboratory, Los Alamos, NM, May 1988.

Ho87 Hoff, Diana L., Chew, Eddie W., and Rope, Susan K., "1986 Environmental Monitoring Program Report for the Idaho National Engineering Laboratory Site," DOE/ID-12082(86), Idaho Operations Office, DOE, Idaho Falls, ID, May 1987.

Ho88 Holland, R.C., and Brekke, D.D., "Environmental Monitoring at the Lawrence Livermore National Laboratory Annual Report 1987," UCRL-50027-87, Lawrence Livermore National Laboratory, Livermore, CA, April 1988.

Kl88 Klein, Richard D., "1987 Pinellas Plant Environmental Monitoring Report," GEPP-EM-1114, General Electric Aerospace, April 1988.

La88 Laseter, William A., and Langston, David C., "Environmental Monitoring Report for Pantex Plant Covering 1987," MHSMP-88-19, Mason & Hanger-Silas Mason Co., Inc., Amarillo, TX, April 1988.

Mi87a Millard, G., et al., "1986 Environmental Monitoring Report, Sandia National Laboratories," SAND87-0606, Sandia National Laboratories, Albuquerque, NM, April 1987.

Mi87b Miltenberger, R.P., Royce, B.A., and Naidu, J.R., "1986 Environmental Monitoring Report, Brookhaven National Laboratory," BNL 52088, Brookhaven National Laboratory, Upton, NY, June 1987.

Mo84 Moore, E.B., "Control Technology for Radioactive Emissions to the Atmosphere at U.S. Department of Energy Facilities," PNL-4621 Final, Pacific Northwest Laboratory, Richland, WA, October 1984.

Mo85 Moore, E.B., and Fullam, H.T., "Control Technology for Radioactive Emissions to the Atmosphere at U.S. Department of Energy Facilities: The Los Alamos Meson Physics Facility," PNL-4621 Add. 1, Pacific Northwest Laboratory, Richland, WA, March 1985.

Oa87a Oakes, T.W., et al., "Environmental Surveillance of the U.S. Department of Energy Portsmouth Gaseous Diffusion Plant and Surrounding Environs During 1986," ES/ESH-1/V4, Martin Marietta Energy Systems, April 1987.

Oa87b Oakes, T.W., et al., "Environmental Surveillance of the U.S. Department of Energy Oak Ridge Reservation and Surrounding Environs During 1986," ES/ESH-1/V1, Martin Marietta Energy Systems, Oak Ridge, TN, April 1987.

Oa87c Oakes, T.W., et al., "Environmental Surveillance of the U.S. Department of Energy Oak Ridge Reservation and Surrounding Environs During 1986," ES/ESH-1/V4, Martin Marietta Energy Systems, Oak Ridge, TN, April 1987.

PNL87 Pacific Northwest Laboratory, "Environmental Monitoring at Hanford for 1986," Report PNL-6120, Richland, WA, May 1987.

PNL88 Pacific Northwest Laboratory, "Environmental Monitoring at Hanford for 1987," Report PNL-6464, Richland, WA, May 1988.

RMI86 RMI, "Annual Environmental Monitoring Summary for RMI Company Extrusion Plant, Ashtabula, Ohio, for 1986," prepared for U.S. DOE under contract No. DE-AC05-76OR01405, 1986.

RMI89 Letter and attachments dated August 2, 1989 from Richard Mason, Director of Environmental Affairs, RMI Company, to James Hardin, Environmental Standards Branch, Criteria and Standards Division, Office of Radiation Programs, U.S. Environmental Protection Agency.

Ro88 Rogers, J.G., et al., "Environmental Surveillance of the U.S. Department of Energy Oak Ridge Reservation and Surrounding Environs During 1987," ES/ESH-4/V1, Martin Marietta Energy Systems, Inc., Oak Ridge, TN, April 1988.

Sc87 Schleimer, Gary E., et al., "Annual Environmental Monitoring Report of the Lawrence Berkeley Laboratory, 1986," LBL-23235, Lawrence Berkeley Laboratory, Berkeley, CA, April 1987.

Se88 Setlock, George H., et al., "Annual Environmental Monitoring Report, U.S. Department of Energy, Rocky Flats Plant," RFP-ENV-87, Rockwell International, Golden, CO, April 1987.

Sw87 Swindall, E.R., et al., "Environmental Report for Calendar Year 1986 on Radiological and Nonradiological Parameters, Battelle," BCD 5186, Battelle Columbus Division, Columbus, OH, May 1, 1987.

Tek81 "Technical Support for the Evaluation and Control of Emissions of Radioactive Materials to Ambient Air," Teknekron Research, Inc., May 7, 1981.

Th86 Thompson, James J., "Environmental Report for Lovelace Inhalatzion Toxicology Research Institute for CY-1985," LITRI, Albuquerque, NM, April 1986.

We87 Westinghouse Materials Company of Ohio, "Feed Materials Production Center, Environmental Monitoring Annual Report for 1986," FMPC-2076, Cincinnati, OH, April 1987.

Ze87 Zeigler, Carroll C., et al., "Savannah River Plant Environmental Report - Annual Report for 1986," DPSPU-87-30-1, Vols. I and II, E.I. du Pont de Nemours & Co., Savannah River Plant, Aiken, SC, 1987.

3. NRC-LICENSED AND NON-DOE FEDERAL FACILITIES

3.1 INTRODUCTION AND BACKGROUND

The Nuclear Regulatory Commission (NRC) and the Agreement States issue licenses for the use of radionuclides. This chapter deals with all of these licensed facilities that are not involved in nuclear power generation and with Federal facilities other than those owned by the Department of Energy (DOE). The facilities that are part of the light-water uranium fuel cycle are discussed in Chapter 4 of this report, and DOE facilities are examined in Chapter 2. Facilities licensed only for the possession of sealed sources are not considered, since sealed sources do not release radionuclides to air.

NRC and Agreement State licensees are divided into by-product, source material, and special nuclear material categories. By-product licensees are further divided into hospitals, radiopharmaceutical manufacturers, research laboratories, sealed source manufacturers, and low-level waste incinerators. Special nuclear material licensees are divided into research reactors and non-light-water reactor fuel fabricators.

Most non-DOE Federal facilities are included in the above categories. For example, Veterans Administration hospitals are included in the hospital category. Federal facilities not included in any other category are discussed separately. Thus, this source category is divided into nine sub-categories:

- Hospitals
- Radiopharmaceutical Manufacturers
- Research Laboratories
- Research Reactors
- Sealed Source Manufacturers
- Non-LWR Fuel Fabricators
- Source Material Licensees
- Low-Level Waste Incinerators
- Non-DOE Federal Facilities.

There are approximately 6,000 such facilities, and they are found in all 50 states. The largest groups are the 3,680 licensed hospitals and the 1,500 research laboratories. The smallest group is the four non-light-water reactor fuel fabricators. These facilities emit radionuclides over a wide spectrum, usually in small amounts. Typically, effluent controls are activated charcoal filters to delay the release of iodine and noble gases and high efficiency particulate air (HEPA) filters to capture particulates. Controls and information pertaining to each category are discussed separately.

The information presented in this chapter was obtained from sources identified by a literature search and direct contact with licensees and regulators. Whenever possible, current (1988) data

were used in the assessment. To determine which facilities are likely to have the highest levels of emissions, Radiation Safety Officers at licensed facilities and staff at the NRC and Agreement States were contacted. The facilities identified were then contacted to obtain effluent release data and additional site-specific information. Since it was not possible to survey all 6,000 licensees, facilities with high or unusual emissions may have been missed.

The raw data from a Conference of Radiation Control Program Directors' (CRCPD) survey of waste production and effluents were also used (CRC87). While this survey does not identify specific facilities or their exact locations, it does provide data on the number of facilities and emissions. Additional data were obtained from the American Hospital Association (AHA86) and from survey results presented in Cook (Co81) and Corbit (Co83).

Based on the emissions identified for each facility, the radiation doses and risks to nearby individuals and to the regional population were asssessed. The methodology discussed in Volume I of this Background Information Document was used in all of the assessments.

3.2 HOSPITALS

3.2.1 General Description

Over half of the hospitals in the United States handle radiopharmaceuticals. Most use them for radionuclide imaging, in which a compound labeled with a nuclide such as technetium-99m is traced through the patient's body using an elaborate radiation detection system. Hospitals also administer large, therapeutic amounts of nuclides such as I-131. Radiopharmaceuticals are mostly in liquid form but can also be gaseous or solid.

Radiogases, such as Xe-133, are used for in-vivo lung studies. The gas is inhaled by the patient, then exhaled into a collection or ventilation system. The gas is either released directly to air, charcoal filtered, or held for decay. Liquids are stored and handled in fume hoods, which may have effluent filters. They can be volatilized during administration to the patient, which normally occurs in a room at negative pressure but without effluent controls.

Data from the American Hospital Association indicate that there are 3,680 hospitals in the United States that handle diagnostic radiopharmaceuticals (AHA86). About a third of these (1,371) also handle therapeutic amounts of these drugs. Two-thirds of these hospitals are located in urban areas; the rest are in rural locations. States with the largest number of such hospitals are California (317), Texas (270), and New York (197).

3.2.2 Basis for Risk Assessment

The doses and risks caused by release of radionuclides to air were assessed by constructing one model facility to represent typical hospitals and a second model facility to represent a very large hospital with larger emissions.

3.2.2.1 Emissions

Effluent data from over 100 hospitals, obtained from the CRCPD survey (CRC87), were used to construct the model facilities. Nearly all hospitals reported releases of xenon-133; the highest release was 31.4 Ci/y and the average was 1 Ci/y. Eight hospitals reported releases of iodine-125; the highest release, 0.039 Ci/y, is about four times the average value of 0.01 Ci/y. Six reported releases of iodine-131; these also averaged 0.01 Ci/y. Other nuclides were reported by one or two hospitals. The absence of reported radioiodine releases is common, due to the lack of effluent monitoring at hospitals. Facilities with no reported emissions were omitted from the computation of the average release rates.

The average emissions for xenon-133, iodine-125, and iodine-131 were used to construct the typical model facility. These average values are consistent with the release rates reported by Corbit (Co83) and SC&A (SCA84). The large model hospital was created using the maximum release reported in the CRCPD survey. The estimated emissions for the model hospitals are shown in Table 3-1.

Table 3-1. Estimated emissions from model hospitals.

Facility	Radionuclide	Release Rate (Ci/y)
Typical Hospital	Xe-133	1.0E+0
	I-125	1.0E-2
	I-131	1.0E-2
Large Hospital	Xe-133	3.1E+1
	I-125	3.9E-2
	I-131	2.4E-2

3.2.2.2 Site Characteristics

The model representing typical hospitals was assessed at two different locations. To represent the doses and risks in urban areas, an assessment was made using demographic and meteorological data for Boston, MA. Data for Columbia, MO, were used to estimate the doses and risks for rural areas. The two

assessments used urban and rural food supply assumptions respectively. In both assessments, the stack height was set at 1 meter and the nearest individuals were assumed to be 150 meters downwind from the release point. The large model hospital was again assessed using a 1 meter release height, an urban location, and assuming the nearby individuals are 100 meters downwind.

Detailed information on the values input to the assessment codes for these models is presented in Appendix A.

3.2.3 Results of the Dose and Risk Assessment

The results of the dose and risk assessment of the model hospital facilities are presented in Tables 3-2 and 3-3. The highest doses and risks are estimated for the large model hospital. The highest doses to both nearby individuals and the regional population are to the thyroid, 5.1 mrem/y and 12 person-rem/year, respectively. These doses are caused by the iodine-125, predominately via the ingestion pathway. The risks predicted for the model large hospital indicated that nearby individuals have a lifetime fatal cancer risk of approximately 2 in one million, and that there will be 7E-5 deaths/year in the regional population.

The results for the model hospitals representing typical urban and rural hospitals show lower doses and risks. For the nearby individuals and the regional population at the model urban hospital the highest doses are also to the thyroid, 0.2 mrem/y, and 1.4 person-rem/year, respectively. Iodine-125 and iodine-131 are the significant radionuclides, and inhalation is the predominant pathway. The releases from the urban hospital are estimated to result in lifetime fatal cancer risks to nearby individuals much less than 1 in one million and to cause approximately 1E-5 deaths/year in the regional population.

The highest doses received by nearby individuals (28 mrem/y) and the regional populations (7.0 person-rem/year) at the model rural hospital are also to the thyroid, due to emissions of radioiodines. These doses are higher than those at the urban hospital due to the greater significance of the ingestion pathway.

The estimated distribution of the fatal cancer risk in the exposed populations is presented in Table 3-4. An estimated 6E-2 deaths/year are caused by emissions from all hospitals. These estimates were made by scaling the results obtained for the typical urban and rural model hospitals by the number of urban and rural hospitals, 2,467 and 1,213, respectively. The number of persons at risk was constrained to the population of the United States.

Table 3-2. Estimated radiation dose rates from model hospitals.

Facility	Organ	Nearby Individuals (mrem/y)	Regional Population (person-rem/y)
Urban Hospital	Gonads	1.2E-2	4.6E-2
	Breast	1.4E-2	5.6E-2
	Thyroid	2.0E-1	1.4E+0
	Remainder	7.1E-3	2.8E-2
Rural Hospital	Thyroid	2.8E+1	7.0E+0
Large Hospital	Thyroid	5.1E+0	1.2E+1

Table 3-3. Estimated fatal cancer risks from model hospitals.

Facility	Nearby Individuals Lifetime Fatal Cancer Risk	Regional (0-80 km) Population Deaths/y
Urban Hospital	2E-7	1E-5
Rural Hospital	5E-6	2E-5
Large Hospital	2E-6	7E-5

Table 3-4. Estimated distribution of the fatal cancer risk to the regional (0-80 km) populations from all hospitals.

Risk Interval	Number of Persons	Deaths/y
1E-1 to 1E+0	0	0
1E-2 to 1E-1	0	0
1E-3 to 1E-2	0	0
1E-4 to 1E-3	0	0
1E-5 to 1E-4	0	0
1E-6 to 1E-5	*	*
< 1E-6	240,000,000	6E-2
Totals	240,000,000	6E-2

*Results from the large model hospital indicate there may be some individuals at this risk level, but insufficient information is available to quantify either the number of persons or the deaths/year.

3.2.4 Supplementary Control Options and Costs

Emissions from facilities in this segment of the NRC-licensed source category do not result in exposures or risks high enough to warrant a full evaluation of supplementary control options and costs. Well-proven control technologies such as charcoal for iodine or decay traps for noble gases could be employed. Costs for any such system cannot be accurately determined due to the number of facilities and the lack of information on ventilation rates and on the extent of current use of controls.

3.3 RADIOPHARMACEUTICAL MANUFACTURERS

3.3.1 General Description

Radiopharmaceutical suppliers, distributors, and nuclear pharmacies number approximately 120 (Ce81). These are broken down into 15 large firms, 70 small to medium-sized firms, and 35 nuclear pharmacy operators. The analysis focused on the large firms that manufacture the radionuclides. These firms handle large amounts of radionuclides in hot cells, which are equipped with air cleaning systems (typically HEPA filters and charcoal). The smaller firms change the chemical form of the nuclides, while the pharmacies repackage the material into convenient amounts.

Information obtained on small firms and pharmacies suggests that radionuclides are handled in fume hoods, which are equipped with very efficient air cleaning filters. The most common filters are charcoal beds, which trap radioiodines and noble gases. Airborne effluents of these facilities are consequently very much lower than those of the large manufacturers.

3.3.2 Basis for Risk Assessment

The assessment of radiopharmaceutical manufacturers is based on the results obtained for four reference facilities. The reference facilities are actual manufacturers that are among the largest producers.

3.3.2.1 Emissions

Emissions data for three of the reference facilities were obtained from the manufacturers themselves. The fourth facility operates a nuclear reactor and is thus required to file effluent reports with the NRC. The dose and risk assessments are based on 1987 effluent data. Emissions data were also available from the CRCPD survey (1987) for seven unidentified facilities. These data were used for comparative purposes only. Emissions for the reference facilities are shown in Table 3-5.

Table 3-5. Effluent release rates (Ci/y) for radiopharmaceutical manufacturers.

Radionuclide	Reference Facility A	B	C	D
P-32	-	1.6E-2	-	-
S-35	1.9E-2	1.6E-2	3.8E-1	-
I-125	1.3E-2	2.0E-2	-	2.5E+0
I-131	-	2.5E-3	-	3.9E+0
H-3	-	-	9.8E+1	-
C-14	-	-	8.5E+0	-
Xe-135	-	-	-	8.1E+3
Xe-135m	-	-	-	2.9E+3
Xe-133	-	2.8E+0	-	1.4E+4
Xe-133m	-	-	-	4.5E+2
Kr-88	-	-	-	1.7E+3
Kr-87	-	-	-	1.2E+2
Kr-85	-	9.5E-1	-	1.7E+0
Kr-85m	-	-	-	1.3E+3
Kr-83m	-	-	-	4.6E+2
Ar-41	-	-	-	1.1E+3

3.3.2.2 Site Characteristics

Actual site data, where available, were used for the risk assessments. Meteorological data were taken from the nearest airports: Chicago, IL (A); Boston, MA (B&C); and Newburgh, NY (D). Stack heights used were all 15 m. Distances to the nearby individuals are 430 m, 200 m, 150 m, and 480 m. Food fractions typical of urban areas were assumed in all cases except Reference Facility D where rural food fractions were used.

3.3.3 Results of the Dose and Risk Assessment

The doses and risks estimated for the four reference facilities are presented in Tables 3-6 and 3-7. The highest estimated doses and risks are at Reference Facility D, where nearby individuals and the regional population are predicted to receive doses to the thyroid of 9.5E+1 mrem/y and 6.0E+2 person-rem/year respectively. The lifetime fatal cancer risk to nearby individuals is estimated to be 2E-4; the releases cause 2E-2 deaths/year in the regional population.

The total risk from radiopharmaceutical manufacturers is estimated to be 2E-2 deaths/year. This is the sum of the estimates for Reference Facilities A through C, multiplied by 5 and added to the estimate for Reference Facility D. The factor of 5 is used to expand the three reference facilities to cover all 15 actual facilities. Facility D is treated individually because it is the only facility that operates a nuclear reactor. Table 3-8 presents the collective risks, and number of people at risk, as a function of individual risk level.

Table 3-6. Estimated radiation dose rates from radiopharmaceutical manufacturers.

Reference Facility	Organ	Nearby Individuals (mrem/y)	Regional Population (person-rem/y)
A	Gonads	8.9E-4	8.9E-3
	Thyroid	5.4E-2	2.4E+0
B	Gonads	4.4E-2	1.4E-2
	Breast	5.2E-2	1.7E-2
	Thyroid	7.3E-1	1.6E+0
	Remainder	2.8E-2	1.3E-2
C	Gonads	7.1E-3	7.2E-1
	Breast	7.5E-3	9.9E-1
	Red Marrow	7.9E-3	1.3E+0
	Lungs	7.2E-3	7.7E-1
	Remainder	7.9E-3	9.9E-1
D	Gonads	7.6E+0	7.4E+1
	Breast	7.5E+0	7.6E+1
	Thyroid	9.5E+1	6.0E+2
	Remainder	5.7E+0	5.4E+1

Table 3-7. Estimated fatal cancer risks from reference radiopharmaceutical manufacturers.

Facility	Nearby Individuals Lifetime Fatal Cancer Risk	Regional (0-80 km) Population Deaths/y
A	2E-8	7E-6
B	1E-6	9E-6
C	2E-7	4E-4
D	2E-4	2E-2

Table 3-8. Estimated distribution of the fatal cancer risk to the regional (0-80 km) populations from all radiopharmaceutical manufacturers.

Risk Interval	Number of Persons	Deaths/y
1E-1 to 1E+0	0	0
1E-2 to 1E-1	0	0
1E-3 to 1E-2	0	0
1E-4 to 1E-3	0	0
1E-5 to 1E-4	3,100	2E-3
1E-6 to 1E-5	140,000	3E-3
< 1E-6	110,000,000	2E-2
Totals	110,000,000	2E-2

3.3.4 Supplementary Control Options and Costs

Supplemental controls are examined for Reference Facility D, which has the highest estimated doses and risks. The nuclides contributing the most to dose are iodine-125 and iodine-131. Control of these nuclides is typically by adsorption on activated charcoal. However, Reference Facility D already employs this control method.

Nevertheless, it is possible to increase the efficiency of the existing charcoal adsorption system. Factors that influence efficiency are the impregnant used, flow rate, humidity, and temperature (Mo83). The first supplemental control examined is drying the exhaust air before it enters the charcoal adsorbers. Because the retention efficiency of charcoal is degraded by high humidity conditions, drying the exhaust air will boost efficiency.

The second option is chilling the charcoal beds. At lower temperatures, iodine is retained on the charcoal for longer periods. With a short half-life nuclide, such as iodine-131 (8 days), the activity decaying on the beds can be greatly increased.

The cost of employing these enhancements is difficult to determine, because they are dependent upon the configuration of the existing system. If the original installation allowed for the addition of these options at a later date, then their installation would not be difficult. However, this is probably not the case.

Lacking the data needed to perform an engineering study, the cost of these modifications can only be estimated grossly. At 50 percent of the cost of a new system, this is estimated to be $350,000 (DM80).

The effectiveness of these modifications can only be estimated. A reduction in radioiodine emissions of 99 percent and noble gas emissions of 75 percent can be assumed. Such a reduction would lower the calculated risks from this facility to 5E-3 deaths/year, reducing the predicted fatalities caused by releases from all radiopharmaceutical manufacturers to 7E-3 deaths/year.

3.4 LABORATORIES

3.4.1 General Description

The NRC and Agreement States license approximately 1,500 laboratories that use radionuclides in unsealed forms. This number is obtained by taking the total number of NRC-licensed laboratories to be approximately 800 (NRC87) and adding it to a previous count of 700 facilities licensed by the Agreement States (Co83). These laboratories are estimated to be 57 percent academic and the remainder either government or private research facilities. This estimate assumes that the number of academic laboratories is a more stable figure and has remained relatively unchanged from previous estimates (Ce81).

Academic laboratories generally encompass a large number of sites in one area and use small amounts of a large number of radionuclides. Twenty-nine radionuclides were identified in use at various laboratories. Private and government laboratories use millicurie to curie amounts of particular radioisotopes, depending upon the actual procedures used. One of the more important applications is the use of radioactively labeled chemicals (i.e., radioiodine labeled proteins) to trace dynamic processes.

The most pervasive form of effluent control is one or more high efficiency particulate air (HEPA) filters in series connected to a fume hood, hot cell, or glove box containing the radioactive material. Often charcoal filters are used alone or in series with HEPA filters to control the release of iodine and noble gases. Exhaust alarms are typically set to sound if the concentration at the release point reaches 10 percent of the maximum permissible concentration (MPC) limit established by the licensing authority. Quality assurance is maintained by periodic wipe testing of the exhaust system either before the last filter, if the filters are in a series, or at the point of release.

3.4.2 Basis for Risk Assessment

3.4.2.1 Emissions

Emissions data were gathered from 46 facilities. The results from the CRCPD survey of effluents were also used. This was a confidential survey, with the laboratories separated into academic, private, and government facilities. The results from

Corbit (Co83) were used, but only on a limited basis, because data were separated by isotope and not by facility.

Approximately 41 percent of all laboratories have emissions that are either zero or below the lower limits of detection of their monitoring equipment. The majority of the laboratories that do emit detectable quantities have exhaust concentrations between 1 and 5 percent of the applicable MPC. The largest emissions are estimated to be less than 10 percent of the MPC, but for the purpose of this study were conservatively assumed to be 10 percent of the MPC. Emissions are usually not monitored continuously; instead, surveys are conducted monthly or bi-monthly, and the emissions are estimated from these measurements.

A weighted average of all the information, omitting zero responses, was used to estimate emissions for the model facility. These are given in Table 3-9. The emission data were weighted by segment composition (private/government = 43 percent, academic = 57 percent) and sample size (primary = 45, CRCPD = 140, and Corbit = 44). The Corbit study (Co83) was given a weight equivalent to one-half of its actual weight because it was not separated into academic and private facilities. Finally, the large number of nuclides was reduced by screening out those nuclides making a negligible contribution to dose.

Table 3-9. Effluent release rates (Ci/y) for laboratories.

Radionuclide	Model Facility	Reference Facility A
H-3	1.1E+0	-
C-14	3.9E-3	-
S-35	4.7E-4	-
Co-60	3.8E-5	2.1E-4
Kr-85	1.8E-1	-
I-125	2.4E-3	-
I-131	5.1E-4	8.1E-3
Xe-133	2.2E-1	-
Cs-137	-	1.5E-4
Pu-239	3.7E-9	-
Am-241	7.6E-10	-

3.4.2.2 Site Characteristics

The model facility was placed in an urban area for purposes of the risk assessment. Meteorological data were taken from an actual airport. The release point was characterized as a 6 m stack, 350 m from the closest resident. Facility A is an actual laboratory with a 10 m release height. Meteorological data from the nearest airport were used in the analysis. The closest resident was in an urban area, 100 m from the stack.

3.4.3 Results of the Dose and Risk Assessment

The results of the dose and risk assessment of the largest and model facilities are presented in Tables 3-10 and 3-11. The estimated organ doses are all below 1 mrem/y for nearby individuals, and the maximum lifetime fatal cancer risk is estimated to be 3E-7.

The estimated distribution of the fatal cancer risk in the exposed population is presented in Table 3-12. The total collective risk (deaths/year) from research laboratories is obtained by scaling the model facility risk by 622, the estimated number of laboratories that have non-zero emissions. The result is an estimated 8E-3 deaths/year. The number of persons at risk is constrained to the population of the United States.

Table 3-10. Estimated radiation dose rates from laboratories.

Facility	Organ	Nearby Individuals (mrem/y)	Regional Population (person-rem/y)
Model Laboratory	Gonads	1.2E-2	3.4E-2
	Breast	1.3E-2	3.5E-2
	Thyroid	1.5E-1	4.3E-1
	Remainder	8.8E-3	3.1E-2
Reference Laboratory A	Gonads	6.6E-3	9.9E-2
	Breast	6.0E-3	9.0E-2
	Thyroid	2.7E-2	5.2E-1
	Remainder	5.0E-3	7.6E-2

Table 3-11. Estimated fatal cancer risks from laboratories.

Facility	Nearby Individuals Lifetime Fatal Cancer Risk	Regional (0-80 km) Population Deaths/y
Model Laboratory	3E-7	1E-5
Reference Laboratory A	1E-7	3E-5

Table 3-12 Estimated distribution of the fatal cancer risk to the regional (0-80 km) populations from all laboratories.

Risk Interval	Number of Persons	Deaths/y
1E-1 to 1E+0	0	0
1E-2 to 1E-1	0	0
1E-3 to 1E-2	0	0
1E-4 to 1E-3	0	0
1E-5 to 1E-4	0	0
1E-6 to 1E-5	0	0
< 1E-6	240,000,000	8E-3
Totals	240,000,000	8E-3

3.4.4 Supplementary Control Options and Costs

Emissions from facilities in this segment of the NRC-licensed source category do not result in doses or risks high enough to warrant a full evaluation of supplementary control options and costs.

3.5 RESEARCH AND TEST REACTORS

3.5.1 General Description

There were 70 research and test reactors operating as of December 1987 (NRC87). These reactors range in power level from zero (three critical experiment facilities) to 10,000 kilowatts. Most are located at universities and are used for teaching and research. Of the many different designs and manufacturers, the most common is General Atomics' TRIGA reactor.

There are two additional unlicensed reactors operated by the U.S. Army in Maryland and New Mexico. They are discussed in Section 3.10 of this chapter.

Most facilities ventilate the reactor building directly to the atmosphere through tall stacks or roof vents. The larger facilities employ particulate filters. Nearly all of the facilities monitor their effluents.

3.5.2 Basis for Risk Assessment

Doses and risks resulting from test and research reactors are evaluated on the basis of four actual reactors with the largest emissions.

3.5.2.1 Emissions

Emission data, shown in Table 3-13, were collected for the four largest emitters identified by Corbit (Co83). These include three university research reactors and one government research reactor. Emissions data from Corbit were supplemented by information presented in the facilities' annual operating reports (e.g., MIT87). The principal nuclide emitted is argon-41. Tritium is also emitted, although in lesser amounts.

Table 3-13. Effluent release rates (Ci/y) for research reactors.

Facility	Radionuclide H-3	Ar-41
Reference Reactor A	1.6E+1	2.5E+3
Reference Reactor B	1.6E+2	4.7E+2
Reference Reactor C	-	4.2E+3
Reference Reactor D	-	2.5E+2

3.5.2.2 Site Characteristics

Actual site data were used for the four risk assessments. Meteorological data were taken from airports near the four facilities (Columbia, MO; Ft. Meade, MD; Boston, MA; Providence, RI). The stack heights are 33 m, 33 m, 50 m, and 34 m, respectively. Rural food supply assumptions were used for all cases except Boston. The distances to the nearest individuals are 750 m, 1,500 m, 750 m, and 1,500 m, respectively.

3.5.3 Results of the Dose and Risk Assessment

Doses and risks were calculated for each of the four reference reactors. The results are presented in Tables 3-14 and 3-15. The highest exposures received by nearby individuals are estimated to be 0.8 mrem/y to the gonads, and the individuals at highest risk are estimated to have a lifetime fatal cancer risk of 2E-5.

The fatal cancer risk estimated from these four reactors was extrapolated to obtain the total collective risk (deaths/year) from all research and test reactors. The extrapolation is based on the ratio of the argon-41 released by the four largest emitters (7,416 Ci/y) to the argon-41 released by all 70 research reactors (12,557 Ci/y). This ratio, 0.59, was used to scale up the risk from the four reactors to the total population risk of 4E-2 deaths/year from all research and test reactors. Table 3-16 presents the estimated collective risk, and the number of people at risk, as a function of individual risk level.

Table 3-14. Estimated radiation dose rates from research reactors.

Facility	Organ	Nearby Individuals (mrem/y)	Regional Population (person-rem/y)
Reference Reactor A	Gonads	7.8E-1	8.1E+0
	Breast	7.0E-1	7.3E+0
	Red Marrow	6.0E-1	6.3E+0
	Lungs	6.0E-1	6.2E+0
	Remainder	6.0E-1	6.3E+0
Reference Reactor B	Gonads	2.6E-1	7.3E+0
	Breast	2.3E-1	6.9E+0
	Red Marrow	2.0E-1	6.2E+0
	Lungs	2.0E-1	6.2E+0
	Remainder	2.0E-1	6.8E+0
Reference Reactor C	Gonads	2.7E-1	6.8E+1
	Breast	2.4E-1	6.1E+1
	Red Marrow	2.1E-1	5.2E+1
	Lungs	2.1E-1	5.2E+1
	Remainder	2.1E-1	5.2E+1
Reference Reactor D	Gonads	3.6E-2	4.4E-1
	Breast	3.3E-2	3.9E-1
	Red Marrow	2.8E-2	3.4E-1
	Lungs	2.8E-2	3.3E-1
	Remainder	2.8E-2	3.4E-1

Table 3-15. Estimated fatal cancer risks from research reactors.

Facility	Nearby Individuals Lifetime Fatal Cancer Risk	Regional (0-80 km) Population Deaths/y
Reference Reactor A	2E-5	2E-3
Reference Reactor B	5E-6	2E-3
Reference Reactor C	6E-6	2E-2
Reference Reactor D	7E-7	1E-4

Table 3-16. Estimated distribution of the fatal cancer risk to the regional (0-80 km) populations from research and and test reactors.

Risk Interval	Number of Persons	Deaths/y
1E-1 to 1E+0	0	0
1E-2 to 1E-1	0	0
1E-3 to 1E-2	0	0
1E-4 to 1E-3	0	0
1E-5 to 1E-4	1,300	2E-4
1E-6 to 1E-5	630,000	2E-2
< 1E-6	23,000,000	2E-2
Totals	24,000,000	4E-2

3.5.4 Supplementary Control Options and Costs

Emissions from facilities in this segment of the NRC-licensed source category do not result in exposures or risks high enough to warrant a full evaluation of supplementary control options and costs.

3.6 SEALED SOURCE MANUFACTURERS

3.6.1 General Description

Sealed source manufacturers take radionuclides in an unsealed form and put them into a permanently sealed container. Two categories of sealed source manufacturers contribute to airborne emissions. The first category consists of manufacturers that produce sealed radiation sources other than tritium (such as Am-241). There are eight known manufacturers of this type. An additional six manufacturers of this type (e.g., The Nucleus, Oak Ridge, TN) use only exempt quantities of radionuclides and produce negligible emissions.

The other category of sealed source manufacturer seals tritium gas into self-luminous lights. There are three known firms that perform this type of work. All of these facilities are located in industrial areas. They rely heavily on engineered safeguards to prevent releases of radionuclides.

The radiation source manufacturers use high efficiency particulate air (HEPA) filters singly or in series to remove radionuclides from their effluent streams. The lighting manufacturers use desiccant columns, sometimes combined with catalytic recombiners, to remove tritium from their effluents. The only part of the process that results in emissions is the loading of radionuclides into containers which are subsequently sealed. All of the work is done in controlled areas, with

radiation monitors in operation to detect any leaks. The sealed containers are stored and shipped without emissions.

3.6.2 Basis for Risk Assessment

The doses and risks resulting from the operations of sealed source manufacturers are assessed using the actual emissions and site characteristics for the three manufacturers of self-luminous lights (Reference Facilities A, B, and C) and a model facility to represent the non-tritium source manufacturing facilities.

3.6.2.1 Emissions

The source term for the model radiation source facility is based on the arithmetic average of the emissions from four facilities that provided data. The model facility emits krypton-85, cobalt-60, americium-241, iridium-192, and californium-252, as shown in Table 3-17. The tritium lighting producers all provided effluent data for 1984, so no model facility is needed. Their emissions are also shown in Table 3-17. Since 1984, Reference Facility C has installed a catalytic recombiner system; therefore, current emissions are lower than the 1984 values.

Table 3-17. Effluent release rates (Ci/y) for sealed source manufacturers.

Radionuclide	Model Facility	Reference Facility A	Reference Facility B	Reference Facility C
H-3	-	3.4E+2	1.5E+3	2.2E+3
Co-60	3.2E-7	-	-	-
Ni-63	-	8.0E-6	-	-
Kr-85	2.4E-1	-	-	-
Ir-192	3.3E-6	-	-	-
Po-210	-	1.4E-4	-	-
Am-241	1.4E-7	6.1E-5	-	-
Cf-252	3.0E-9	-	-	-

3.6.2.2 Site Characteristics

The model facility was placed in an urban area. It was assumed to have a 6 m stack, 250 m away from the nearest resident. The tritium lighting manufacturers were assessed using actual site data. Meteorology was taken from nearby airports (Buffalo, NY; White Plains, NY; and Harrisburg, PA). Stack heights were set at 10 m. Nearby individuals are located 7,500 m, 400 m, and 150m, respectively, from the facilities. The New York sites were treated as urban sites; the Pennsylvania site, as rural.

3.6.3 Results of the Dose and Risk Assessment

Tables 3-18 and 3-19 show the results of the assessment for the model radiation source facility and all of the tritium lighting facilities. The highest estimated doses from non-tritium sealed source manufacturers are estimated to be to the endosteum and red marrow, both less than 1 mrem/y. The lifetime risk to nearby individuals is 8E-10. For the tritium lighting manufacturers, nearby individuals are estimated to receive doses on the order of 6 mrem/y and to have a lifetime fatal cancer risk of 2E-4.

To estimate the collective risk (deaths/year) from all sealed source manufacturers, the risk from the model was multiplied by 8 and added to the sum of the risks from the three tritium lighting facilities. This yields the total risk from this category of 2E-2 deaths/year. Table 3-20 presents this collective risk, and the number of people at risk, as a function of individual risk level.

Table 3-18. Estimated radiation dose rates from sealed source manufacturers.

Facility	Organ	Nearby Individuals (mrem/y)	Regional Population (person-rem/y)
Model Facility	Red Marrow	1.8E-4	1.3E-3
	Endosteum	2.2E-3	1.5E-2
	Remainder	1.0E-4	7.1E-4
Reference Facility A	Gonads	1.4E-1	1.0E+0
	Breast	1.3E-1	1.0E+0
	Red Marrow	1.7E-1	1.2E+0
	Lungs	1.4E-1	1.1E+0
	Endosteum	5.8E-1	3.4E+0
	Remainder	1.9E-1	1.4E+0
Reference Facility B	Gonads	5.6E-1	2.8E+1
	Breast	5.6E-1	2.8E+1
	Red Marrow	5.5E-1	2.8E+1
	Lungs	5.6E-1	2.8E+1
	Remainder	6.0E-1	3.3E+1
Reference Facility C	Gonads	5.4E+0	9.2E+0
	Breast	5.4E+0	9.2E+0
	Red Marrow	5.4E+0	9.1E+0
	Lungs	5.5E+0	9.2E+0
	Remainder	6.7E+0	1.1E+1

Table 3-19. Estimated fatal cancer risks from sealed source manufacturers.

Facility	Nearby Individuals Lifetime Fatal Cancer Risk	Regional (0-80 km) Population Deaths/y
Model Facility	8E-10	8E-8
Reference Facility A	4E-6	4E-4
Reference Facility B	2E-5	1E-2
Reference Facility C	2E-4	4E-3

Table 3-20. Estimated distribution of the fatal cancer risk to the regional (0-80 km) populations from sealed source manufacturers.

Risk Interval	Number of Persons	Deaths/y
1E-1 to 1E+0	0	0
1E-2 to 1E-1	0	0
1E-3 to 1E-2	0	0
1E-4 to 1E-3	0	0
1E-5 to 1E-4	550	4E-4
1E-6 to 1E-5	13,000	8E-4
< 1E-6	63,000,000	1E-2
Totals	63,000,000	2E-2

3.6.4 Supplemental Control Options and Costs

One of the sealed source manufacturers (Reference Facility C) is estimated to cause doses to nearby individuals in excess of 5 mrem/y. This exposure is due to emissions of kilocuries of tritium. Additional treatment of this effluent is possible.

In general, tritium is emitted as either tritiated water or tritium gas. Tritiated water can be removed from an effluent stream by using desiccant columns. These types of systems are very efficient. To remove tritium gas, however, requires that some type of catalytic recombiner be installed to transform the tritium gas into tritiated water. The costs of removal depend on exhaust flow rate. At low flow rates (approximately <40 m^3/min), it is estimated that the costs would be approximately $1.66 million to $7 million (Mo83). These costs are relatively high,

because this technology is not widely applied. There are only a handful of such installations, and each one is custom engineered.

Applying this supplemental control to Reference Facility C would cost approximately $1.7 to $7.0 million. The effectiveness of this system can only be estimated. Assuming a 99 percent reduction in emissions from Reference Facility C, the risk from this category would be reduced by half, to 1E-2 deaths/year.

3.7 NON-LWR FUEL FABRICATORS

3.7.1 General Description

Facilities in this category fabricate uranium fuel for research reactors and naval propulsion reactors. Three facilities making naval fuel were identified. One other facility manufactures only research reactor fuel. The process is similar to fabrication of power reactor fuel, where enriched UO_2 is formed into pellets, which are stacked inside tubes, and then bundled into fuel assemblies or cores. Fabrication procedures for naval fuel are classified.

Effluents to air are controlled using HEPA filters and/or gas scrubbers. The scrubbers are used to neutralize and remove the nitrogen oxides formed during HNO_3 pickling (chemical milling) operations at some facilities.

3.7.2 Basis for Risk Assessment

The doses and risks associated with this segment of the NRC-licensed source category are evaluated using actual emissions data and site characteristics for three of the four facilities.

3.7.2.1 Emissions

Recent (1987) data were obtained from operating reports for three facilities. The nuclides released that contribute the most to dose are uranium-234 and uranium-235. Release quantities of these and other isotopes are shown in Table 3-21.

3.7.2.2 Site Characteristics

Actual site and facility data were used in the risk assessment. Meteorology data were taken from nearby airports (Providence, RI; Knoxville, TN; and North San Diego, CA). Urban food supply assumptions were used, except in the analysis of the first facility which is in a rural area. The first facility releases effluents from a roof vent and was treated as an area source (525 m^2). The second and third facilities release through 35 m and 6 m stacks, respectively. The distances to the nearest residents are respectively 425 m, 350 m, and 750 m.

Table 3-21. Effluent release rates (Ci/y) for non-LWR fuel fabricators.

Radionuclide	Facility		
	Naval A	Naval B	Research
U-234	4.3E-5	3.4E-3	3.3E-6
U-235	1.2E-6	8.1E-5	1.5E-5
U-236	7.8E-8	1.2E-6	-
U-238	2.1E-9	5.7E-5	3.6E-6
Am-241	-	2.6E-8	-
Pu-238	-	4.2E-8	-
Pu-239	-	2.2E-8	-
Pu-240	-	2.0E-8	-
Pu-241	-	2.8E-6	-
Pu-242	-	2.9E-11	-
Th-232	-	-	4.0E-8
Ar-41	-	-	1.2E+0
Co-60	-	-	4.0E-5
Sr-90	-	-	4.8E-7
Y-90	-	-	4.8E-7
Cs-137	-	-	1.4E-4
I-131	-	-	1.0E-6

3.7.3 Results of the Dose and Risk Assessment

Off-site dose and risk were calculated for the three facilities from which release data were obtained. The results are shown in Tables 3-22 and 3-23. None of these facilities are estimated to cause nearby individuals doses greater than 1 mrem/y, and the lifetime fatal cancer risks to nearby individuals are less than 1E-6.

The estimated distribution of the fatal cancer risk to the regional populations from all non-LWR fuel fabricators is presented in Table 3-24. The deaths/year from the naval fuel fabricators were added and scaled up by 50 percent to account for the other facility of this type. The risks from the single research reactor fuel fabricator were then added. The result is the total risk of 2E-4 deaths/year.

3.7.4 Supplemental Control Options and Costs

Emissions from facilities in this segment of the NRC-licensed source category do not result in exposures or risks high enough to warrant a full evaluation of supplementary control options and costs. The well-proven technology of additional HEPA filtration systems could be employed to reduce emissions further.

Table 3-22. Estimated radiation dose rates from non-LWR fuel fabricators.

Facility	Organ	Nearby Individuals (mrem/y)	Regional Population (person-rem/y)
Naval Fuel A	Lungs	1.5E-1	2.5E-1
Naval Fuel B	Lungs	4.2E-1	4.7E+0
Research Fuel	Gonads	1.1E-2	5.1E-2
	Lungs	1.1E-1	5.8E-1
	Remainder	8.4E-3	4.1E-2

Table 3-23. Estimated fatal cancer risks from non-LWR fuel fabricators.

Facility	Nearby Individuals Lifetime Fatal Cancer Risk	Regional (0-80 km) Population Deaths/y
Naval Fuel A	2E-7	6E-6
Naval Fuel B	7E-7	1E-4
Research Fuel	4E-7	3E-5

Table 3-24. Estimated distribution of the fatal cancer risk to the regional (0-80 km) populations from all non-LWR fuel fabricators.

Risk Interval	Number of Persons	Deaths/y
1E-1 to 1E+0	0	0
1E-2 to 1E-1	0	0
1E-3 to 1E-2	0	0
1E-4 to 1E-3	0	0
1E-5 to 1E-4	0	0
1E-6 to 1E-5	0	0
< 1E-6	8,200,000	2E-4
Totals	8,200,000	2E-4

3.8 SOURCE MATERIAL LICENSEES

3.8.1 General Description

Source material licensees are companies that handle relatively large amounts of thorium or uranium (non-enriched) during the manufacture of a product. The NRC licenses 12 facilities for the use of thorium (Mo88). Nine of them are currently using thorium. It is assumed that a similar number of facilities are active in Agreement States. This assumption is probably conservative because after contacting half of the Agreement States, only one active license for the use of thorium was located. Only four facilities in the United States hold source material licenses for the processing of depleted uranium.

The processes used by these licensees are varied. The facilities that emit thorium process low-thorium-content alloys into wire for lighting purposes. Other uses of thorium include scrap collection, glass creation, and lens coating. The depleted uranium is universally extruded into projectiles. In all of these processes, HEPA filters are used in series to reduce effluent levels. During extrusion and machining, lubricants are sprayed on the material to prevent particles from becoming airborne. The lubricants are then collected and disposed of as solid waste.

3.8.2 Basis for the Risk Assessment

A reference thorium facility and a reference uranium facility were used to evaluate the doses and risks of source material manufacturers.

3.8.2.1 Emissions

The emissions from source material licensees are split between facilities that have no emissions and facilities that emit approximately 3E-4 Ci/y of thorium or uranium. The thorium facilities are modeled by an existing facility that emits at this level. The uranium plants emit depleted uranium in the hundreds of microcuries. These plants are likewise modeled by a reference facility. Release rates are shown in Table 3-25.

Table 3-25. Effluent release rates for source material licensees.

Facility	Radionuclide (Ci/y)			
	U-234	U-235	U-238	Th-232
Uranium	2.7E-4	7.0E-6	2.7E-4	-
Thorium	-	-	-	3.0E-4

3.8.2.2 Site Characteristics

The two reference facilities were assessed using actual site and facility data. Meteorology data came from nearby airports (Cleveland, OH, and Bristol, TN). Effluent release heights are 10 m and 6 m, respectively. The nearest residents are located 100 m and 200 m away from the respective facility. Both facilities were assessed using urban food assumptions.

3.8.3 Results of the Dose and Risk Assessment

Tables 3-26 and 3-27 present the results of the dose and risk estimates for nearby individuals and the regional population for the reference facilities. Nearby individuals are estimated to receive doses to the lungs or the endosteum on the order of 3 mrem/y and to have a lifetime fatal cancer risk of about 4E-6.

Table 3-28 presents the estimated distribution of the fatal cancer risk to the regional populations from all source material licensees. This estimate was obtained by scaling the results for the reference facilities by the number of actual facilities. The total collective risk is estimated to be 1E-3 deaths/year.

Table 3-26. Estimated radiation dose rates from source material licensees.

Facility	Organ	Nearby Individuals (mrem/y)	Regional Population (person-rem/y)
Uranium	Lungs	2.7E+0	3.4E+0
Thorium	Lungs	2.6E+0	1.0E+1
	Endosteum	4.1E+0	1.6E+1

Table 3-27. Estimated fatal cancer risks from source material licensees.

Facility	Nearby Individuals Lifetime Fatal Cancer Risk	Regional (0-80 km) Population Deaths/y
Uranium	4E-6	8E-5
Thorium	3E-6	1E-4

Table 3-28. Estimated distribution of the fatal cancer risk to the regional (0-80 km) populations from all source material licensees.

Risk Interval	Number of Persons	Deaths/y
1E-1 to 1E+0	0	0
1E-2 to 1E-1	0	0
1E-3 to 1E-2	0	0
1E-4 to 1E-3	0	0
1E-5 to 1E-4	0	0
1E-6 to 1E-5	0	0
< 1E-6	24,000,000	1E-3
Totals	24,000,000	1E-3

3.8.4 Supplemental Control Options and Costs

Emissions from facilities in this segment of the NRC-licensed source category do not result in exposures or risks high enough to warrant an evaluation of supplementary control options and costs. The well-proven technology of additional HEPA filtration systems could be employed to reduce emissions further.

3.9 LOW-LEVEL WASTE INCINERATORS

3.9.1 General Description

Airborne effluents from low-level waste handling and disposal arise primarily from waste incineration. The practice of evaporating disposal site liquids has ceased, so this is no longer a source of releases to air. Incineration is done mainly by large research laboratories and hospitals. About 100 such incinerators are operating in the United States.

The older incinerators usually release directly to the atmosphere. The newer ones are designed with sophisticated effluent control systems, including afterburners, venturi scrubbers, and gas scrubbers (e.g., NaOH and water). Since the newer units have much higher capacities (e.g., 1,000 lb/hr), they are replacing the older units.

3.9.2 Basis for the Risk Assessment

The dose and risk assessment is based on a large reference facility to obtain doses and risks to nearby individuals and a model facility with average emissions to obtain collective doses and risks.

3.9.2.1 Emissions

Effluent data were obtained from the CRCPD survey (1987) for 35 incinerators. Nearly all reported releases of tritium and carbon-14. Nine or fewer facilities reported releases of sulfur-35, chromium-51, iodine-125, and phosphorus-32. A model facility was created using the average releases of these nuclides. An actual facility reporting the largest releases of the above nuclides was also modeled. Table 3-29 presents the source terms used in the assessment.

3.9.2.2 Site Characteristics

The model and large incinerator were both placed at a suburban site for the risk assessment. They both have a stack height of 35 m and a thermal release rate of 2.2E+5 cal/second. The nearest resident is located 300 m away. Both assessments used meteorological data from a nearby airport.

Table 3-29. Effluent release rates (Ci/y) for low-level waste disposal facilities.

Radionuclide	Model Facility	Reference Facility
H-3	1.0E-1	1.3E+0
C-14	5.0E-2	1.5E+0
P-32	7.0E-2	1.4E-1
S-35	1.0E-1	8.7E-1
Cr-51	1.0E-2	5.0E-2
Se-75	-	1.0E-3
I-125	1.5E-2	9.0E-2

3.9.3 Results of the Dose and Risk Assessment

Assessments for the model incinerator and the large reference facility indicate that nearby individuals receive doses less than 1 mrem/y and have lifetime fatal cancer risks of less than 1E-6. The results are shown in Tables 3-30 and 3-31.

Table 3-32 presents the estimated distribution of the fatal cancer risk to the regional populations from all low-level waste disposal facilities. This estimate was obtained by scaling up the risks from the model facility by a factor of 100. This gives a risk of 1E-3 deaths/year from all incinerators.

3.9.4 Supplemental Control Options and Costs

Emissions from low-level waste disposal facilities do not result in exposures or risks high enough to warrant an evaluation of supplementary control options and costs.

Table 3-30. Estimated radiation dose rates from low-level waste disposal facilities.

Facility	Organ	Nearby Individuals (mrem/y)	Regional Population (person-rem/y)
Model Facility	Red Marrow	8.0E-4	6.7E-2
	Lungs	4.6E-4	2.3E-2
	Endosteum	9.4E-4	7.7E-2
	Remainder	2.5E-4	2.5E-2
Reference Facility	Gonads	1.2E-2	6.0E-1
	Breast	1.4E-2	7.5E-1
	Thyroid	1.1E-1	1.1E+1
	Remainder	8.1E-3	5.5E-1

Table 3-31. Estimated fatal cancer risks from low-level waste disposal facilities.

Facility	Nearby Individuals Lifetime Fatal Cancer Risk	Regional (0-80 km) Population Deaths/y
Model Facility	1E-8	1E-5
Reference Facility	3E-7	2E-4

Table 3-32. Estimated distribution of the fatal cancer risk to the regional (0-80 km) populations from all low-level waste disposal facilities.

Risk Interval	Number of Persons	Deaths/y
1E-1 to 1E+0	0	0
1E-2 to 1E-1	0	0
1E-3 to 1E-2	0	0
1E-4 to 1E-3	0	0
1E-5 to 1E-4	0	0
1E-6 to 1E-5	0	0
< 1E-6	240,000,000	1E-3
Totals	240,000,000	1E-3

3.10 NON-DOE FEDERAL FACILITIES

3.10.1 General Description

This category includes Department of Defense (DOD) facilities. Other non-DOE federal facilities, such as Veterans Administration hospitals and NASA research laboratories, are included in the evaluations presented in Sections 3.2, 3.4, and 3.5. Federal facilities operated by the DOE are discussed in Chapter 2.

This category is made up of two groups of DOD facilities. The first and largest group consists of nuclear shipyards and naval bases. The second consists of DOD research reactors. There are 13 active shipyards and bases. Seven are on the east coast, five are on the west coast, and one is in Hawaii. These facilities refuel and service the Navy's nuclear fleet. Most of the radioactive wastes are in solid form. According to the Navy, there are no significant discharges of airborne radioactivity (Ma88). Exhaust air from waste handling buildings is passed through HEPA filters to control emissions.

The DOD operates two unlicensed research reactors, at Aberdeen, MD, and White Sands, NM. Operations and effluent control are essentially the same as for the research reactors described in Section 3.5.

3.10.2 Basis for the Risk Assessment

A single model facility is used to estimate the doses and risks from this segment of the NRC-licensed source category, as the magnitudes of the releases from both the DOD reactors and the shipyards are comparable.

3.10.2.1 Emissions

Effluent monitoring at DOD shipyards and bases reveals few measurable nuclides (Ma88). However, the Navy has estimated maximum releases, based on many years of monitoring data. These releases are primarily noble gases and cobalt-60 (see Table 3-33). Since the magnitude of the releases from DOD research reactors (Co83) are comparable to the maximum releases estimated by the Navy, the emissions for the single model facility represent both types of actual DOD sites.

3.10.2.2 Site Characteristics

For purposes of the risk assessment, the model DOD facility was placed at the site of an actual west coast shipyard. Meteorological data came from that same shipyard. The release height was assumed to be 15 m, and the distance to the nearest residents is 1,500 m. Rural food supply assumptions were used.

Table 3-33. Effluent release rates (Ci/y) for DOD facilities.

Radionuclide	Model Facility
H-3	1.0E-3
C-14	1.0E-1
Co-60	1.0E-3
Kr-83m	2.0E-2
Kr-85m	2.4E-2
Kr-87	5.0E-2
Kr-88	2.0E-2
Xe-131m	5.0E-3
Xe-133m	1.0E-2
Xe-133	2.1E-1
Xe-135	2.5E-1
Ar-41	4.1E-1

3.10.3 Results of the Dose and Risk Assessment

The doses and risks from the model facility are shown in Tables 3-34 and 3-35. Table 3-36 presents the estimated distribution of the fatal cancer risk to the regional populations from all DOD facilities. This estimate was made by multiplying the risks estimated for the model facility by a factor of 12. This factor is obtained by considering the shipyards and bases that are in proximity (e.g., Newport News and Norfolk, VA) as single facilities. The collective population risk from all DOD facilities is estimated to be 1E-3 deaths/year.

3.10.4 Supplementary Control Options and Costs

Emissions from facilities in this segment of the NRC-licensed and non-DOE Federal source category do not result in exposures or risks high enough to warrant an evaluation of supplementary control options and costs.

Table 3-34. Estimated radiation dose rates from DOD facilities.

Facility	Organ	Nearby Individuals (mrem/y)	Regional Population (person-rem/y)
Model Facility	Gonads	1.1E-2	2.5E-1
	Breast	1.0E-2	2.4E-1
	Red Marrow	8.9E-3	2.3E-1
	Lungs	1.1E-2	2.3E-1
	Remainder	9.0E-3	2.1E-1

Table 3-35. Estimated fatal cancer risks from DOD facilities.

Facility	Nearby Individuals Lifetime Fatal Cancer Risk	Regional (0-80 km) Population Deaths/y
Model Facility	2E-7	8E-5

Table 3-36. Estimated distribution of the fatal cancer risk to the regional (0-80 km) populations from all DOD facilities.

Risk Interval	Number of Persons	Deaths/y
1E-1 to 1E+0	0	0
1E-2 to 1E-1	0	0
1E-3 to 1E-2	0	0
1E-4 to 1E-3	0	0
1E-5 to 1E-4	0	0
1E-6 to 1E-5	0	0
< 1E-6	64,000,000	1E-3
Totals	64,000,000	1E-3

3.11 SUMMARY OF THE COLLECTIVE RISKS FROM ALL FACILITIES

The population risks calculated for each of the nine subcategories were combined to obtain an estimate of the total deaths/year resulting from emissions from all NRC-licensed facilities. The results are presented in Table 3-37. Because the regional population extends 80 km from each facility, individuals are exposed to emissions from more than a single facility. Thus, the combined regional population obtained by summing the results of the individual estimates exceeds the total population of the United States. The number of persons at risk shown in Table 3-37 is therefore limited to 240 million persons, the population of the United States. The total risk from this category, 2E-1 deaths/year, was not adjusted to account for this overlap, since virtually all the risk is incurred by individuals living close to each facility.

The largest contributors to the collective risk are research reactors and hospitals, estimated to cause 4E-2 and 6E-2 deaths/year, respectively. Although hospitals have relatively low emissions, there are many of them. The next highest contributors to collective risk are radiopharmaceutical manufacturers, estimated to cause 2E-2 deaths/year, and research laboratories (8E-3 deaths/year). Like hospitals, research

laboratories have low emissions, but their large number results in small risks to many persons.

Table 3-37. Estimated distribution of the fatal cancer risk to the regional (0-80 km) populations from all NRC-licensed facilities.

Risk Interval	Number of Persons	Deaths/y
1E-1 to 1E+0	0	0
1E-2 to 1E-1	0	0
1E-3 to 1E-2	0	0
1E-4 to 1E-3	*	*
1E-5 to 1E-4	5,000	2E-3
1E-6 to 1E-5	780,000	3E-2
< 1E-6	239,000,000	1E-1
Totals	240,000,000	2E-1

*Results indicate there may be some individuals at this risk level, but insufficient information is available to quantify either the number of persons or the deaths/year.

With respect to individual risk, the maximum value of 2E-4 lifetime fatal cancer risk is estimated for both a radiopharmaceutical manufacturer and a sealed source manufacturer. A research reactor and another sealed source manufacturer account for the next highest individual risk, estimated to be 2E-5.

These estimates of deaths per year in the regional populations and maximum lifetime risks to nearby individuals must be viewed with caution. Only a limited number of the 6,000 facilities in this category could be evaluated, and the evaluations rest on unverified emissions data provided by the facilities. While the methodology attempted to evaluate the facilities with the greatest potential risk, the lack of emissions data for so many of the facilities makes it impossible to state with certainty that this goal was achieved. Thus, there may be NRC-licensed and non-DOE Federal facilities causing greater doses and risks than those that have been estimated in this evaluation.

3.12 REFERENCES

AHA86 American Hospital Association, "Annual Survey of Hospitals," Chicago, IL, 1986.

Ce81 Centaur Associates, Inc., "An Economic Study of the Radionuclides Industry," prepared for the U.S. Nuclear Regulatory Commission, NUREG/CR-2048, Washington, D.C., 1981.

Co81 Cook, J.R., "A Survey of Radioactive Effluent Releases from Byproduct Material Facilities," U.S. Nuclear Regulatory Commission, NUREG-0819, Washington, D.C., 1981.

Co83 Corbit, C.D., Herrington, W.N., Higby, D.P., Stout, L.A., Corley, J.P., "Background Information on Sources of Low-Level Radionuclide Emissions to Air," Pacific Northwest Laboratory, PNL-4670, Richland, WA, 1983.

CRC87 Council of Radiation Control Program Directors, Inc., "Compilation of State-by-State Low-Level Radioactive Waste Information," U.S. Department of Energy, DOE/ID/12377, Frankfort, KY, 1987.

DM80 Dames and Moore, "Airborne Radioactive Emission Control Technology," prepared for the U.S. Environmental Protection Agency, Office of Radiation Programs, Washington, D.C., 1980

Ma88 Mangeno, J.J., Steele, J.M., Poletti, L.F., "Environmental Monitoring and Disposal of Radioactive Wastes from U.S. Naval Nuclear Powered Ships and Their Support Facilities 1987," Naval Nuclear Propulsion Program, NT-88-1, Washington, D.C., 1988.

MIT87 M.I.T. Research Reactor Staff, "Annual Report to United States Nuclear Regulatory Commission for the Period July 1, 1986 - June 30, 1987," Cambridge, MA, August 29, 1987.

Mo83 Moore, E., et al., "Control Technology for Radioactive Emissions to the Atmosphere at U.S. Department of Energy Facilities," Pacific Northwest Laboratory, PNL-4621, Richland, WA, 1983.

Mo88 Moriarty, M., Personal Communication., U.S. Nuclear Regulatory Commission, Washington, D.C., 1988.

NRC87 U.S. Nuclear Regulatory Commission, "Licensed Operating Reactors: Status Summary Report," NUREG/0020, Washington, D.C., 1987.

SCA84 SC&A, Inc., "Impact of Proposed Clean Air Act Standards for Radionuclides on Users of Radiopharmaceuticals," prepared for U.S. EPA, Office of Radiation Programs, under Work Assignment #5, Contract #68-02-3853, with Jack Faucett & Associates, October 1984.

4. URANIUM FUEL CYCLE FACILITIES

4.1 INTRODUCTION

The uranium fuel cycle includes uranium mills, uranium hexafluoride conversion facilities, uranium enrichment facilities, light-water reactor fuel fabricators, light-water power reactors, and fuel reprocessing plants. With the exception of the uranium enrichment facilities that are owned by the Federal government and operated by contractors under the supervision of the Department of Energy (DOE), these facilities are licensed by the Nuclear Regulatory Commission (NRC) or the Agreement States. Releases of radioactive materials from these facilities during normal operation are subject to the limits established by 40 CFR 190. 40 CFR 190 limits the exposure to any member of the general public from radionuclides released to air or water to 25 mrem/y to the whole body or to any organ except the thyroid, which is limited to 75 mrem/y. In addition, the NRC requires releases of radioactive materials to be as low as reasonably achievable (ALARA) below these regulatory limits.

As part of the current rulemaking, the EPA has performed a dose and risk assessment of current airborne emissions from uranium fuel-cycle facilities. The results of the dose and risk assessment indicate that airborne emissions from operating uranium mills cause greater doses and risks than those from the uranium conversion, fuel fabrication, and light-water reactor sectors of the fuel cycle.

4.1.1 Previous Evaluations

The potential public health impacts of the release of radioactive materials into ambient air from the uranium fuel cycle have been comprehensively evaluated. The EPA has prepared a series of reports describing this evaluation. These reports include:

U.S. Environmental Protection Agency, Environmental Analysis of the Uranium Fuel Cycle - Part I - Fuel Supply, EPA 520/9-73-003C, Office of Radiation Programs, Washington, D.C., 1973;

U.S. Environmental Protection Agency, Environmental Analysis of the Uranium Fuel Cycle - Part II, Nuclear Power Reactors, EPA 520/9-73-003C, Office of Radiation Programs, Washington, D.C., 1973;

U.S. Environmental Protection Agency, A Radiological Emissions Study at a Fuel Fabrication Facility, EPA 520/5-77-004, Office of Radiation Programs, Washington, D.C., 1978;

U.S. Environmental Protection Agency, Radiological Impact Caused by Emission of Radionuclides into Air in the United States, EPA 520/7-79-006, Washington, D.C., 1979;

U.S. Environmental Protection Agency, Final Environmental Impact Statement for Remedial Action Standards for Inactive Uranium Processing Sites, EPA 520/4-82-013-1, October 1982;

U.S. Environmental Protection Agency, Final Environmental Impact Statement for Standards for the Control of Byproduct Materials from Uranium Ore Processing, EPA 520/1-83-008-1, September 1983;

U.S Environmental Protection Agency, Radionuclides, Background Information Document for Final Rules, EPA 520/1-84-022, Office of Radiation Programs, October 1984; and

U.S. Environmental Protection Agency, Final Rule for Radon-222 Emissions from Licensed Uranium Mill Tailings, Background Information Document, EPA 520/1-86-009, August 1986.

4.1.2 Scope of the Evaluation

The segments of the uranium fuel cycle addressed in this chapter include:

1. Uranium mills and their associated tailings piles;
2. Uranium conversion facilities;
3. Fuel fabrication facilities; and
4. Nuclear power facilities.

Each of these categories is addressed in the following sections, which include a general description of each facility's characteristics, processes, emission controls, radionuclide emissions, and predicted radiation dose equivalent rates and health risks to nearby individuals and the populations within 80 kilometers of these facilities. In addition, for categories with the highest exposures, supplementary control options and costs are presented here.

The assessment of doses and risks shows that particulate releases from operating uranium mills cause some members of the general public to receive organ dose equivalents greater than 25 mrem/y; for nearby individuals, estimates of the dose equivalent to the lungs and the endosteum are as high as 120 and 85 mrem/y, respectively. The nearby individuals at greatest risk are estimated to have a lifetime fatal cancer risk of 2E-4. The

basis for these estimates and the detailed results are presented in the following sections.

The assessment of uranium mills addresses only particulate emissions. Radon emissions from the tailings are addressed in Chapter 9. The uranium enrichment plants are included in the assessment of DOE facilities (see Chapter 2). As there are no operable fuel reprocessing plants in the United States, and since reprocessing is prohibited under current policies, this segment of the uranium fuel cycle has not been evaluated. High-level waste disposal facilities are addressed in Chapter 5.

4.2 URANIUM MILLS

4.2.1 General Description

4.2.1.1 Uranium Mill Operations in the United States

Uranium mills extract uranium from ores which contain only 0.01 to 0.3 percent U_3O_8. Uranium mills, typically located near uranium mines in the western United States, are usually in areas of low population density. The product of the mills is shipped to conversion plants, where it is converted to volatile uranium hexafluoride (UF_6) which is used as feed to uranium enrichment plants.

As of December 1988, of 27 uranium mills in the United States licensed by the NRC or Agreement States, 4 were operating, 8 were on standby, 14 were being decommissioned, and 1 had been built but never operated. The 8 mills on standby could resume operations, but the 14 mills that are being decommissioned will never operate again. The status of each mill is presented in Table 4-1. The status descriptions used in this document are not necessarily the same as the license definitions. Umetco's Uravan mill is listed as on standby; however, since the mill's tailings impoundment is being reclaimed, the mill is considered to be decommissioned for the purpose of this assessment.

The operating mills have a capacity of 9,600 tons of ore per day. The number of operating mills is down considerably from 1981, when 21 mills were processing approximately 50,000 tons of ore per day.

4.2.1.2 Process Description

The mined ore is stored on pads prior to processing. Crushing and grinding and a chemical leaching process separate the uranium from the ore. The uranium product is recovered from the leach solution and then dried and packaged. The waste product (mill tailings) is piped as a slurry to a surface impoundment area (tailings pile).

Table 4-1. Uranium mills licensed by the U.S. Nuclear Regulatory Commission as of December 1988.

Licensee	Common Name	Location	Rated Capacity[a] (t ore/d)	Status[b]	Process[c]
American Nuclear Corp.	-	Gas Hills, WY	950	3	1,5
Anaconda	Bluewater	Bluewater, NM	6000	3	1,3
Atlas Minerals	Moab	Moab, UT	1400	3	2,3
Bear Creek Uranium Co.	Bear Creek	Converse Co. WY	2000	3	1,3
Bokum Resources	-	Marquez, NM	2000	4	1,3
Chevron Resources Co.	Panna Maria	Panna Maria, TX	2500	1	1,3
Conoco-Pioneer	-	Falls City, TX	3400	3	1,3
Cotter Corp.	Canon	Canon City, CO	1200	2	1,3
Dawn Mining Co.	Dawn	Ford, WA	450	3	1,3
Exxon	Ray Point	Ray Point, TX	-	3	-
Exxon Minerals	Highland	Converse Co., WY	3200	3	1,3
Homestake Mining Co.	Homestake	Grants, NM	3400	1	4,6
BP American	L-Bar	Seboyeta, NM	1600	3	-
Minerals Exploration	Sweetwater	Sweetwater Co., WY	3000	2	1,3
Pathfinder Mines	Lucky Mc	Gas Hills, WY	2500	2	1,3
Pathfinder Mines	Shirley Basin	Shirley Basin, WY	1700	1	1,3
Petrotomics	Petromics	Shirley Basin, WY	1500	3	1,3
Plateau Resources	Shootaring	Shootaring Cnyn, UT	750	2	1,3
Quivira	Ambrosia	Ambrosia Lake, NM	-	2	-
Rio Algom	La Sal	La Sal, UT	750	2	4,6
TVA	Edgemont	Edgemont, SD	-	3*	-
Umetco Minerals Corp.	Gas Hills	Gas Hills, WY	1400	3	1,5
Umetco Minerals Corp.	White Mesa	Blanding, UT	2000	1	1,7
Umetco Minerals Corp.	Uravan	Uravan, CO	1300	2**	1,3
UNC Mining & Milling	Church Rock	Church Rock, NM	3000	3	1,3
Western Nuclear Inc.	Split Rock	Jeffrey City, WY	1700	3	1,3
Western Nuclear Inc.	Sherwood	Wellpinit, WA	2000	2	1,3

Status Codes:
1 = Facility Operating
2 = Facility on Standby
3 = Facility Decommissioned or Being Decommissioned
4 = Facility Built, Never Operated

Process Codes:
1 = Acid leach
2 = Alkaline leach
3 = Solvent extraction
4 = Carbonate leach
5 = Eluex
6 = Caustic precipitation
7 = Column ion exchange

Data Sources:
(a) Tons of ore/day (Jo81).
(b) Personal communication with Dale Smith, USNRC, Denver, Colorado.
(c) From Ri81.

* Decommissioning and long-term stabilization complete.
** Per public comment by Umetco, the mill is being maintained on standby although the tailings impoundment is being reclaimed.

Radioactive materials released to the air during these operations include natural uranium and thorium and their respective decay products (e.g., radium, lead, radon). These radionuclides, with the exception of radon, are released as particulates.

4.2.1.2.1 Ore Storage

Ore is hauled from the mine in trucks. A minimum 10-day supply of ore is kept on storage pads, which are several hectares in area. The ore is transferred to the mill crushing unit via front-end loaders or bulldozers. Although the ore is usually moist upon receipt at the storage pad, it can become dry during storage. The transfer operations, as well as wind erosion, result in dust formation and release of radioactive material in particulate form.

4.2.1.2.2 Milling

The process of extracting uranium from ore starts with crushing and grinding. The ores are crushed dry, but water is added during the grinding process. Some of the newer mills use a one-step wet process called semi-autogenous grinding which eliminates the dry ore crushing step.

The next step consists of leaching uranium out of the ore and separating the uranium product from the leach solution. There are two basic leaching processes: acid leaching for ores with low lime content, and alkaline or carbonate leaching for ores with high lime content. The leach solution is then chemically treated to remove the uranium product. Most mills that use the acid leaching process follow with solvent extraction, a process where the uranium product is separated from the solution by an organic solvent and is then separated from the solvent by a stripping and precipitation operation. The mills that use the alkaline or carbonate leaching process add a caustic to the leach solution, resulting in the precipitation of sodium diuranate. In both cases, the product is dried in large ovens and packaged in 55-gallon drums.

The steps that generate significant radioactive emissions are the dry operations: crushing, drying, and packaging. The intermediate stages are carried out wet in enclosed vessels and do not produce significant amounts of airborne emissions.

4.2.1.2.3 Tailings

After the uranium product is separated from the ore in the leaching process, the residual ore is pumped as a slurry to a tailings impoundment area. A tailings pile, typically about 100 hectares in area, is surrounded by an embankment of impervious material. The liquid portion of the slurry is partially recovered and recycled by some mills and is allowed to evaporate at other mills. The solid tailings are made up of a

sand fraction (particles from 38 to 200 mesh) and a slime fraction (particles smaller than 200 mesh).

An active tailings pile contains wet and dry areas. The slurry feed pipe is moved around the impoundment area to keep the pile level; therefore, the pile has a pond area where the slurry is fed while the rest of the pile is drying out.

As sections of the pile dry, the tailings become a source of windblown dust. The slime component, the most likely to become airborne because of its small particle size, contains uranium concentrations twice as high as the sands (NRC79).

4.2.1.3 Existing Emission Controls

4.2.1.3.1 Ore Storage

Dust from ore storage pads can be controlled by the use of windbreaks and water sprays. Windbreaks are concrete or wood fences around the pile which reduce the amount of wind blowing across the pile. This reduces the drying effect of the wind, as well as reducing the tendency of the wind to pick up dust.

Ore piles with a moisture content of 4 percent or more do not cause dust problems (NRC79). Spraying the pile increases the moisture content of the ore. A tank truck with pumps and hoses can be used for spraying.

4.2.1.3.2 Milling

Dust is controlled during the crushing process by placing air exhaust hoods at the crusher, screens, and transfer points. The exhaust air passes through a dust collector before it is discharged to the atmosphere through a roof vent. As indicated earlier, if a semi-autogenous grinding process is used, then the dry crushing step is eliminated and essentially no dust is emitted.

The off-gas from the drying oven passes through a dust separation system before discharge to the roof vent. Air exhaust hoods are placed in the packaging area, and the exhaust is passed through a dust collector before being vented.

The primary method of removing dust from the exhaust gas is the wet scrubber. Wet scrubbers remove dust particles by impacting them with water droplets. The most common type of wet scrubber is the orifice scrubber, which has a removal efficiency of 93.6 percent. Also common is the impingement scrubber, which has a removal efficiency of 97.9 percent. The venturi scrubber, used infrequently, has a removal efficiency of 99.5 percent but requires more energy to operate than the other two scrubber types. The removal efficiencies presented are those cited by the NRC for these applications (NRC79).

Baghouses are frequently used to remove dust from the crushing and packaging area exhaust. The exhaust air is passed through bag filters made of woven or felted material. Baghouses have a rated removal efficiency of 99.9 percent. They are not suitable for cleaning the dryer off-gas because of the high temperature and moisture content.

4.2.1.3.3 Tailings

Control of dust from a tailings pile is similar to control of dust from the ore storage pad. The tailings pile can be kept wet by truck spraying or by discharging the slurry from multiple discharge points instead of one point.

An alternative method of dust control for tailings surfaces that are not being added to or disturbed is to put a chemical stabilizer on the surface of the pile. Some stabilizers mix with the tailings to form a crust. Other materials, such as asphalt sprays, form a thin film on the pile surface. Both methods are temporary and require annual maintenance.

4.2.2 Basis for the Dose and Risk Assessment of Uranium Mills

The following sections describe the basis for the site-specific and model facilities used to assess the airborne releases of radionuclides from uranium mills. Information on the source term, meteorological, and demographic data assumed are also presented. Detailed information on the parameters supplied to the AIRDOS/DARTAB/RADRISK computer codes is presented in Appendix A. Site-specific source term, meteorological, and demographic data were supplied as input to the assessment codes for the four operating mills and for six of the seven mills on standby. Cotter Corporation's Canon City mine, which is on standby, currently has no dry tailings piles and therefore was not included in the assessment. A generic model mill was used for the assessment of doses and risks from tailings piles of mills that are either decommissioned or undergoing decommissioning. Outputs of the codes include estimates of: dose equivalents to the most exposed individuals (mrem/y); lifetime fatal cancer risk to the most exposed individuals; dose equivalents to the regional (0-80 km) population (person-rem/year); and the number of cancer deaths in the regional population per year of operation (deaths/year).

4.2.2.1 Radionuclide Emissions

The magnitude of releases from uranium mills differs for operating and shutdown facilities. Therefore, in addition to measured process releases reported to the NRC, models were developed to represent windblown particles from active tailings and windblown releases from dry tailings piles where operations have ceased and final stabilization has not yet occurred.

4.2.2.1.1 Operational Experience and Projected Future Emissions

The drying area and the crushing area are the major sources of process releases at a typical plant. Ninety percent of the uranium-234 and uranium-238 released come from the dryer area at the end of the process. On the other hand, thorium-230 and radium-226 emissions result primarily from operations, such as crushing, that occur at the beginning of the process.

Although the number of operating uranium mills has decreased sharply over the last decade, the demand for yellowcake has been steadily increasing as more nuclear power plants have come on line. Yellowcake from foreign sources has supplied an increasing percentage of demand. However, the number of operating mills is expected to stabilize or perhaps even increase slightly in the near future. Radionuclide releases from uranium milling operations should be proportional to the quantity of uranium ore processed.

4.2.2.1.2 Development of Source Term for Assessments

The source terms for operating uranium mills and mills on standby include particulate radionuclides released to air from process exhausts and those blown from the dry areas of the tailings impoundments. The source terms used in the assessment for operating mills, mills on standby, and a generic inactive tailings impoundment, which was used to model decommissioned mills, are presented in Table 4-2.

The source terms presented here for the operating facilities differ from those presented in the draft document due to the use of more current information concerning the total area of wet and dry tailings and the concentration of radium-226 in the tailings at each of the facilities. Also, source terms for mills on standby are now presented wereas they were not originally included in the draft document.

The release rates (Ci/y) for process exhausts are based on measurements of natural uranium, thorium-230, and radium-226. These data were obtained for three of the four mills from the semi-annual environmental monitoring reports submitted by the mills to the Nuclear Regulatory Commission. Whereas Panna Maria was not included in the original assessment due to an inability to obtain measured process release rate data, the mill has now been included using, information obtained from Chevron Resources Company.

Tailings pile emissions are not measured by the mill operators, since the size of the tailings impoundments makes measurement of windblown releases impractical. Therefore, the release rates (Ci/y) from the tailings presented in Table 4-2 were calculated using the methodology presented in NRC's Regulatory Guide 3.59, and the areas of dried tailings and

average radium concentrations shown in Table 4-3, using dusting factors appropriate for the site meteorology and tailings pile characteristics presented in EPA86.

The analysis includes consideration of the predominant periods of tailings resuspension and dispersion during episodes of high wind speed. No data were found showing particle size distributions for process dusts. Particle size distributions for tailings dusts show that approximately 30 percent of the particles are in the respirable size range of 10 microns or less (NRC80). Only the respirable fraction of the total dusts was included in the assessment, and an activity median aerodynamic diameter (AMAD) of 3.0 microns, consistent with the data for tailings dusts, was assumed. Data on lung clearance classifications for windblown tailings could not be found. Therefore, the default values recommended by the ICRP were used for all radionuclides blown from the tailings.

Tailings pile release rates for the Canon City mill are not shown in Table 4-2 since the site currently has no dried tailings impoundments. Tailings release rates for Umetco Minerals Corporations's Uravan mill are also not included. Although the Uravan mill is on standby, the tailings impoundment is being reclaimed. Thus, for the purposes of this assessment, the Uravan mill is considered to be decommissioned and is therefore modeled using the model inactive tailings impoundment.

The lung clearance classifications for uranium from process exhausts are based on solubility studies of yellowcake in simulated lung fluid (Co74, De79, De82, and Ka80). The classifications used for thorium, radium, lead, and polonium are the default values recommended by the ICRP (ICRP66).

The NRC has calculated emissions from tailings piles from several specific mills. These values range from 2.0E-4 to 2.7E-3 Ci/y for uranium-238/uranium-234, 3.3E-3 to 5.2E-2 Ci/y for thorium-230, and 3.2E-3 to 5.5E-2 Ci/y for radium-226 (EPA79).

Annual radionuclide releases from tailings of the model inactive mill, for which permanent stabilization has not been performed, are also presented in Table 4-2. Methodology for calculating these emissions was the same as that for calculating emissions from tailings of active mills. The higher rate of emissions for the inactive tailings pile is attributable to the reduced moisture content of the inactive tailings and the increased pile size.

Table 4-2. Source terms for uranium milling.

Radionuclide	Lung Clearance	AMAD	Release Rate (Ci/y) Process Exhaust	Tailings
		CHEVRON'S PANNA MARIA MILL[a]		
U-238	Y	3.0	1.9E-3	-[b][c]
U-238	D	3.0	1.9E-3	
U-235	Y	3.0	1.1E-5	-
U-235	D	3.0	1.1E-5	
U-234	Y	3.0	1.9E-3	-
U-234	D	3.0	1.9E-3	
Th-230	Y	3.0	9.6E-5	-
Ra-226	W	3.0	3.8E-6	-
Pb-210	D	3.0	3.8E-6	-
Po-210	W	3.0	3.8E-6	-
		HOMESTAKE'S HOMESTAKE MILL		
U-238	Y	3.0	1.7E-1	1.0E-4[c]
U-238	D	3.0	1.7E-1	
U-235	Y	3.0	8.3E-4	7.1E-7[c]
U-235	D	3.0	8.3E-4	
U-234	Y	3.0	1.7E-1	1.0E-4[c]
U-234	D	3.0	1.7E-1	
Th-230	Y	3.0	4.3E-2	1.0E-3[c]
Ra-226	W	3.0	3.9E-2	1.0E-3[c]
Pb-210	D	3.0	3.9E-2	1.0E-3[c]
Po-210	W	3.0	3.9E-2	1.0E-3[c]
		MINERALS EXPLORATION'S SWEETWATER MILL[a]		
U-238	Y	3.0	-[d]	4.3E-3
U-238	D	3.0	-	
U-235	Y	3.0	-	3.0E-5
U-235	D	3.0	-	
U-234	Y	3.0	-	4.3E-3
U-234	D	3.0	-	
Th-230	Y	3.0	-	4.3E-2
Ra-226	W	3.0	-	4.3E-2
Pb-210	D	3.0	-	4.3E-2
Po-210	W	3.0	-	4.3E-2

(a) Source term added to those originally included in draft document to reflect data obtained during comment period.
(b) Panna Maria currently has no dry tailings impoundments.
(c) Changes in source terms with respect to the draft document reflect information on tailings areas and radium-226 concentrations obtained during comment period.
(d) Mill is currently on standy.

Table 4-2. Source terms for uranium milling (continued).

Radionuclide	Lung Clearance	AMAD	Release Rate (Ci/y) Process Exhaust	Tailings
		PATHFINDER'S LUCKY MC MILL[a]		
U-238	Y	3.0	-[b]	1.1E-3
U-238	D	3.0	-	
U-235	Y	3.0	-	8.0E-6
U-235	D	3.0	-	
U-234	Y	3.0	-	1.1E-3
U-234	D	3.0	-	
Th-230	Y	3.0	-	1.1E-2
Ra-226	W	3.0	-	1.1E-2
Pb-210	D	3.0	-	1.1E-2
Po-210	W	3.0	-	1.1E-2
		PATHFINDER'S SHIRLEY BASIN MILL		
U-238	Y	3.0	1.1E-2	5.4E-3[c]
U-238	D	3.0	1.1E-2	
U-235	Y	3.0	8.0E-5	3.9E-5[c]
U-235	D	3.0	8.0E-5	
U-234	Y	3.0	1.1E-2	5.4E-3[c]
U-234	D	3.0	1.1E-2	
Th-230	Y	3.0	1.9E-4	5.4E-2[c]
Ra-226	W	3.0	5.9E-4	5.4E-2[c]
Pb-210	D	3.0	5.9E-4	5.4E-2[c]
Po-210	W	3.0	5.9E-4	5.4E-2[c]
		PLATEAU RESOURCES' SHOOTARING MILL[a]		
U-238	Y	3.0	-[b]	2.0E-4
U-238	D	3.0	-	
U-235	Y	3.0	-	1.4E-6
U-235	D	3.0	-	
U-234	Y	3.0	-	2.0E-4
U-234	D	3.0	-	
Th-230	Y	3.0	-	2.0E-3
Ra-226	W	3.0	-	2.0E-3
Pb-210	D	3.0	-	2.0E-3
Po-210	W	3.0	-	2.0E-3

(a) Source term added to those originally included in draft document to reflect data obtained during comment period.
(b) Mill is currently on standby.
(c) Changes in source terms with respect to the draft document reflect information on tailings areas and radium-226 concentrations obtained during comment period.

Table 4-2. Source terms for uranium milling (continued).

Radionuclide	Lung Clearance	AMAD	Release Rate (Ci/y) Process Exhaust	Tailings
		QUIVIRA'S AMBROSIA LAKE MILL[a]		
U-238	Y	3.0	-[b]	1.1E-3
U-238	D	3.0	-	
U-235	Y	3.0	-	7.5E-6
U-235	D	3.0	-	
U-234	Y	3.0	-	1.1E-3
U-234	D	3.0	-	
Th-230	Y	3.0	-	1.1E-2
Ra-226	W	3.0	-	1.1E-2
Pb-210	D	3.0	-	1.1E-2
Po-210	W	3.0	-	1.1E-2
		RIO ALGOM'S LA SAL MILL		
U-238	Y	3.0	2.8E-2	-[c][d]
U-238	D	3.0	2.8E-2	
U-235	Y	3.0	2.1E-4	-
U-235	D	3.0	2.1E-4	
U-234	Y	3.0	2.8E-2	-
U-234	D	3.0	2.8E-2	
Th-230	Y	3.0	1.0E-4	-
Ra-226	W	3.0	2.8E-4	-
Pb-210	D	3.0	3.3E-4	-
Po-210	W	3.0	3.3E-4	-
		UMETCO'S WHITE MESA MILL		
U-238	Y	3.0	2.1E-2	1.4E-4[c]
U-238	D	3.0	2.1E-2	
U-235	Y	3.0	1.5E-4	1.1E-6[c]
U-235	D	3.0	1.5E-4	
U-234	Y	3.0	2.1E-2	1.4E-4[c]
U-234	D	3.0	2.1E-2	
Th-230	Y	3.0	4.9E-4	1.4E-3[c]
Ra-226	W	3.0	4.8E-4	1.4E-3[c]
Pb-210	D	3.0	1.2E-3	1.4E-3[c]
Po-210	W	3.0	1.2E-3	1.4E-3[c]

(a) Source term added to those originally included in draft document to reflect data obtained during comment period.
(b) Mill is currently on standby.
(c) Changes in source terms with respect to the draft document reflect information on tailings areas and radium-226 concentrations obtained during comment period.
(d) La Sal currently has no dry tailings impoundments.

Table 4-2. Source terms for uranium milling (continued).

Radionuclide	Lung Clearance	AMAD	Release Rate (Ci/y) Process Exhaust	Tailings
WESTERN NUCLEAR INC.'S SHERWOOD MILL[a]				
U-238	Y	3.0	-[b]	1.0E-3
U-238	D	3.0	-	
U-235	Y	3.0	-	7.1E-6
U-235	D	3.0	-	
U-234	Y	3.0	-	1.0E-3
U-234	D	3.0	-	
Th-230	Y	3.0	-	1.0E-2
Ra-226	W	3.0	-	1.0E-2
Pb-210	D	3.0	-	1.0E-2
Po-210	W	3.0	-	1.0E-2
MODEL INACTIVE TAILINGS PILE[c]				
U-238	Y	3.0		8.0E-3
U-235	Y	3.0		5.8E-5
U-234	Y	3.0		8.0E-3
Th-230	Y	3.0		8.0E-2
Ra-226	W	3.0		8.0E-2
Pb-210	D	3.0		8.0E-2
Po-210	W	3.0		8.0E-2

(a) Source term added to those originally included in draft document to reflect data obtained during comment period.
(b) Mill is currently on standby.
(c) After closure, prior to stabilization.

Table 4-3. Areas of the tailings impoundments at uranium mills and average radium-226 concentrations.[a]

Mill	Total Area (acres/ha)	Wet Area (acres/ha)	Dry Area (acres/ha)	Radium-226 (pCi/g)
New Mexico				
Ambrosia Lake				
- Secondary	121/49	13/5	108/44	237
- Lined Ponds	280/113	162/66	118/47	22
Homestake	210/85	140/57	70/28	300
Texas				
Panna Maria	160/65	160/65	0/0	198
Utah				
La Sal	93/38	93/38	0/0	420
Shootaring	7/3	3/1	4/2	280
White Mesa	30/53	125/51	5/2	981
Washington				
Sherwood	80/32	40/16	40/16	200
Wyoming				
Lucky Mc				
- Piles 1,2, & 3	203/82	143/58	60/24	220
- Evap. Ponds	104/42	104/42	0/0	22
Shirley Basin	275/111	215/87	60/24	208
Sweetwater	37/15	30/12	7/3	280
Inactive Tailings	79/32	0/0	79/32	280

(a) The data in this table has changed with respect to the draft document in response to information recieved during the comment period.

4.2.2.2 Dispersion Parameters

In modeling the releases from the mills, both a stack source and an area source were used to represent the process and tailings releases respectively. A 12-meter stack with a 1.2-meter diameter and volumetric flow of 12.7 meters was used for process exhausts. The total area (wet and dry) of the tailings impoundments was used for the size of area sources.

Meteorological data from the nearest meteorological station with joint frequency data in the form required by the assessment codes were used for the active mills. For the inactive tailings, generic meteorological data presented in NRC80 were used. The sources of the meteorological data used for each assessment are presented in Table 4-4.

Table 4-4. Sources of meteorological data used in the assessment of uranium milling.

Mill	Location	Meteorological Station
New Mexico		
Ambrosia Lake	Ambrosia Lake, NM	Ambrosia Lake, NM
Homestake	Grants, NM	Ambrosia Lake, NM
Texas		
Panna Maria	Panna Maria, TX	San Antonio, TX
Utah		
La Sal	La Sal, UT	Grand Junction, CO
Shootaring	Hanksville, UT	
White Mesa	Blanding, UT	Farmington, NM
Washington		
Sherwood	Wellpinit, WA	Spokane, WA
Wyoming		
Lucky Mc	Riverton, WY	
Shirley Basin	Casper, WY	Casper, WY
Sweetwater	Rawlings, WY	
Inactive Tailings	Generic (see text)	-

4.2.2.3 Demographic Data

The actual populations living within 5 km of the operating mills were enumerated by sector segments during site visits made to each mill in 1983 (PNL84). The data for Canon City, Ambrosia Lake, Homestake, La Sal, and Sherwood were updated following site visits by SC&A in 1989. These distributions, presented in Table 4-5, were used in conjunction with the population distributions for 5 to 80 km generated by the computer code SECPOP from 1980 U.S. Census Bureau data. The population distribution for the generic tailings pile was taken from NRC80.

Actual data on food production in the vicinity of these mills were not obtained. Instead, generic food production rates (urban/low productivity) representative of the areas where these mills are located were used in the assessment.

Table 4-5. Estimated populations living within 0 to 5 km of active uranium milling facilities.[a]

Mill	0-0.5 km	0.5-1.0 km	1.0-2.0 km	2.0-3.0 km	3.0-4.0 km	4.0-5.0 km
New Mexico						
Ambrosia Lake*	0	0	0	0	0	0
Homestake*	0	0	187	104	42	57
Texas						
Panna Maria	0	12	42	33	81	285
Utah						
La Sal*	0	0	0	0	40	0
Shootaring	0	0	0	0	0	171
White Mesa	0	0	0	0	0	8
Washington						
Sherwood*	0	0	0	0	32	17
Wyoming						
Lucky Mc	0	0	0	0	0	0
Shirley Basin	0	0	0	0	0	0
Sweetwater	0	0	0	0	0	0

(a) The data source is PNL84 except where marked with an *. These data were updated following site visits by SC&A in 1989.

4.2.3 Results of the Dose and Risk Assessments of Uranium Mills

The AIRDOS-EPA/DARTAB/RADRISK assessment codes estimate the 50-year committed dose equivalents to organs from exposure via air immersion, ground-surface, inhalation, and ingestion pathways. Table 4-6 presents the results of the dose assessment to nearby individuals and to the regional (0-80 km) populations around uranium milling facilities. The organs listed in Table 4-6 are those where the dose is estimated to contribute 10 percent or more of the total fatal cancer risk.

Table 4-6. Estimated radiation dose rates from uranium mills.

Mill	Organ	Nearby Individuals (mrem/y)			Regional Population (person-rem/y)		
		Process	Tailings	Total	Process	Tailings	Total
New Mexico							
Ambrosia Lake	Lungs	-	8.2E-2	8.2E-2	-	7.4E-1	7.4E-1
	Endosteum	-	2.8E-1	2.8E-1	-	3.3E+0	3.3E+0
	Red Marrow	-	2.2E-2	2.2E-2	-	2.6E-1	2.6E-1
	Remainder	-	7.0E-3	7.0E-3	-	1.5E-1	1.5E-1
Homestake	Lungs	8.7E+1	3.6E-1	8.7E+1	9.7E+1	4.2E-1	9.7E+1
	Endosteum	4.9E+1	1.1E+0	5.0E+1	6.7E+1	1.4E+0	6.8E+1
	Red Marrow	-	8.9E-2	8.9E-2	-	1.1E-1	1.1E-1
	Remainder	-	-	-	-	-	-
Texas							
Panna Maria	Lungs	2.0E+0	-	2.0E+0	1.8E+0	-	1.8E+0
	Endosteum	-	-	NA	1.4E+0	-	1.4E+0
	Remainder	-	-	NA	1.0E-1	-	1.0E-1
Utah							
La Sal	Lungs	1.0E+0	-	1.0E+0	9.7E-1	-	9.7E-1
	Endosteum	-	-	-	1.1E+0	-	1.1E+0
	Red Marrow	-	-	-	-	-	-
	Remainder	-	-	-	9.8E-2	-	9.8E-2
Shootaring	Lungs	-	9.8E-2	9.8E-2	-	1.9E-2	1.9E-2
	Endosteum	-	3.1E-1	3.1E-1	-	7.0E-2	7.0E-2
	Red Marrow	-	2.5E-2	2.5E-2	-	5.5E-3	5.5E-3
	Remainder	-	6.2E-3	6.2E-3	-	2.1E-3	2.1E-3
White Mesa	Lungs	3.5E-1	1.5E-3	3.5E-1	7.1E-1	3.0E-2	7.4E-1
	Endosteum	-	5.0E-2	5.0E-2	7.7E-1	1.6E-1	9.3E-1
	Red Marrow	-	4.0E-3	4.0E-3	-	1.3E-2	1.3E-2
	Remainder	-	-	-	6.6E-2	9.0E-3	7.5E-2
Washington							
Sherwood	Lungs	-	4.2E-1	4.2E-1	-	1.0E+0	1.0E+0
	Endosteum	-	1.3E+0	1.3E+0	-	1.0E+1	1.0E+1
	Red Marrow	-	1.1E-1	1.1E-1	-	8.1E-1	8.1E-1
	Remainder	-	2.6E-2	2.6E-2	-	8.1E-1	8.1E-1
Wyoming							
Lucky Mc	Lungs	-	3.7E-2	3.7E-2	-	1.1E-1	1.1E-1
	Endosteum	-	1.4E-1	1.4E-1	-	9.3E-1	9.3E-1
	Red Marrow	-	1.1E-2	1.1E-2	-	7.2E-2	7.2E-2
	Remainder	-	4.9E-3	4.9E-3	-	6.7E-2	6.7E-2

Table 4-6. Estimated radiation dose rates from uranium mills (continued).

Mill	Organ	Nearby Individuals (mrem/y)			Regional Population (person-rem/y)		
		Process	Tailings	Total	Process	Tailings	Total
Wyoming (cont.)							
Shirley Basin	Lungs	7.4E-2	2.0E-1	2.7E-1	3.9E-1	1.1E+0	1.5E+0
	Endosteum	-	7.1E-1	7.1E-1	8.6E-1	1.0E+1	1.1E+1
	Red Marrow	-	5.6E-2	5.6E-2	-	7.9E-1	7.9E-1
	Remainder	-	2.0E-2	2.0E-2	7.6E-2	7.5E-1	8.3E-1
Sweetwater	Lungs	-	2.7E-1	2.7E-1	-	3.2E-1	3.2E-1
	Endosteum	-	9.2E-1	9.2E-1	-	2.4E+0	2.4E+0
	Red Marrow	-	7.3E-2	7.3E-2	-	1.9E-1	1.9E-1
	Remainder	-	2.5E-2	2.5E-2	-	1.7E-1	1.7E-1
Inactive Tailings	Lungs	-	9.8E+1	9.8E+1	-	2.2E+0	2.2E+0
	Endosteum	-	3.1E+2	3.1E+2	-	1.6E+1	1.6E+1
	Red Marrow	-	2.5E+1	2.5E+2	-	1.2E+0	1.2E+0
	Remainder	-	-	-	-	1.0E+0	1.0E+0

The lifetime fatal cancer risks to nearby individuals and the estimated deaths per year in the regional populations are shown in Table 4-7 for each mill. The estimated distribution of the total fatal cancer risk from all mills and the number of persons at each risk interval are presented in Table 4-8. The values of fatal cancer risk distribution from the model inactive tailings pile were multiplied by 15 to obtain an estimate of the distribution from all decommissioned mills. The results for the four operating mills and the seven mills on standby were added to obtain the distribution from all mills.

The only significant pathways for dose and risk are inhalation and ingestion. For nearby individuals, inhalation is generally predominant; for regional populations, ingestion is more important. For nearby individuals, the most significant nuclides released from tailings piles are thorium-230 and lead-210, while the most important plant emissions are uranium-238 and uranium-234. For regional populations, the most important nuclide released from tailings piles is lead-210, but thorium-230, polonium-210, and radium-226 are also emitted in significant quantities. Of nuclides emitted from process stacks, uranium-238 and uranium-234 contribute the most to population dose and risk with, in some cases, less important contributions from lead-210 and thorium-230.

Table 4-7. Estimated fatal cancer risks from uranium mills.

Facility	Nearby Individuals Lifetime Fatal Cancer Risk	Regional (0-80 km) Population Deaths/y
New Mexico		
Ambrosia	2E-7	3E-5
Homestake	2E-4	2E-3
Texas		
Panna Maria	3E-6	5E-5
Utah		
La Sal	2E-6	3E-5
Shootaring	2E-7	7E-7
White Mesa	6E-7	2E-5
Washington		
Sherwood	1E-6	8E-5
Wyoming		
Lucky Mc	1E-7	7E-6
Shirley Basin	6E-7	9E-5
Sweetwater	7E-7	2E-5
Model Inactive Tailings	2E-4	1E-4

Table 4-8. Estimated distribution of the fatal cancer risk to the regional (0-80 km) populations from uranium mills.

Risk Interval	Number of Persons	Deaths/y
1E-1 to 1E+0	0	0
1E-2 to 1E-1	0	0
1E-3 to 1E-2	0	0
1E-4 to 1E-3	84	2E-4
1E-5 to 1E-4	6,500	1E-3
1E-6 to 1E-5	32,000	2E-3
< 1E-6	2,200,000	2E-3
Totals	2,200,000	5E-3

4.2.4 Supplementary Control Options and Costs

4.2.4.1 Controls for Process Releases

The NRC has evaluated additional controls for the process operations that result in significant airborne emissions (NRC80). Several well-proven control technologies can be employed on the ore crushing and yellowcake drying and packaging exhausts. Table 4-9 presents the predicted efficiencies and costs of these technologies. The lifetime costs shown in the last column of the table are based on 15 years of operation.

Table 4-9. Effluent controls for process emissions.

Control	Efficiency, %	Costs (thousands of 1980 dollars)		
		Capital	Annual	Lifetime
Ore Crushing Exhaust Dust-Removal Units				
Orifice	94	55	14	325
Wet Impingement	97.9	138	16.8	390
Low-Energy Venturi Scrubber	99.5	205	32.8	695
Fabric Filter	99.9	387	33.2	885
Fabric Filter & HEPA		407	91.3	1775
Yellowcake Drying and Packaging Exhaust Dust-Removal Units				
Wet Impingement	97.9	45.0	5.5	130
Low-Energy Venturi Scrubber	99.5	55.5	10.8	220
Medium-Energy Venturi Scrubber	99.7	66.1	15.9	305
High-Energy Venturi Scrubber	99.9	71.5	23.8	430
High-Energy Venturi & HEPA		108.2	29.4	550

4.2.4.2 Controls for Windblown Particulates

The solid portion of a dry tailings pile, particularly the slime, is a source of radioactive contamination. The slime contains uranium concentrations twice as high as the sand and, due to its small particle size, becomes easily airborne. Several alternatives have been identified to control potential contaminated dust problems from dry tailings: (a) wetting the tailings; b) leaching the tailings to remove residual radioactivity; c) fixation/solidification of the tailings; (d) application of stabilizers to the surface of the piles to form a crust; and e) covering of the tailings either above or below the ground surface. The method most commonly used at milling operations is wetting of the dry tailings by sprinkler trucks.

This section presents estimated capital, operating, and maintenance costs for each of the alternatives listed above. The

following assumptions form the basis of the cost analysis: a) the tailings are generated at a rate of 675 metric tons (MT) per day or, assuming assuming a six day work week, 209,000 MT per year; b) the tailings are discharged to a 30-hectare (ha) site which is surrounded by embankments approximately 8 meters (m) in height (the embankments occupy an additional 16 ha); and (c) the tailings will be generated over a 15-year period.

4.2.4.2.1 Wetting of Tailings

Wetting of dry tailings is the most common method used to control dust from tailings piles. Water is applied to the tailings by sprinkling from tank trucks or by a stationary sprinkling system. Tailings pond water is used to minimize costs. Homestake Mines, Atlas Minerals, and M. K. Ferguson Mines in New Mexico, Utah, and Colorado, respectively, use this method of dust control.

4.2.4.2.1.1 Tank Truck Application

The costs for this alternative have been estimated for both rental and purchase and are based on the following assumptions: (a) 20 ha per day will be sprinkled with 0.3 cm of water in 8 hours; (b) each truck will travel 50 km per day; (c) 18,925-liter trucks will be used; (d) each 30-ha site will be sprinkled every day; (e) four trucks will be required for the operation; and (f) the yearly escalation for all costs during the life of the project is 5 percent.

The average yearly cost for conducting the wetting operation with the use of rented trucks would be approximately $549,000. The total cost for this alternative over 15 years of operation is estimated to be $8.2 million. The purchase of four trucks would cost approximately $300,000. The average yearly operating and labor costs over the life of the project would be the same as those for the rental option, approximately $318,000. The estimated total cost for this alternative over 15 years of operation is $5.1 million.

4.2.4.2.1.2 Stationary Sprinkling System

A stationary sprinkling system is currently in use at Homestake Mill in Grants, New Mexico, to control dust from mill tailings piles. This method has also been used at mining sites in Wyoming. Maintenance and labor costs are less for a stationary system than for the tank truck alternative.

The cost estimate for this alternative is based on the following assumptions: (a) high-density polyethylene (HDPE) pipe (laid on top of the piles) would be used due to the caustic/acidic nature of the tailings pond water; (b) standard irrigation sprinkler heads, set approximately 9 m apart, would be used; (c) an electric pump would be used to move the tailings pond water through the distribution system; (d) 0.5 cm of tailings pond

water would be used each day; (e) the system would be expanded by two ha each year during the life of the project; and f) each component of the system would be replaced every five years.

The total cost of a stationary sprinkling system over the 15-year life of the project is approximately $1.9 million. The average yearly cost is estimated to be $126,000. Fifty nine percent of this estimate is the labor cost associated with the installation and operation of the system. Homestake Mines has installed and operated its system with an in-house maintenance staff, thereby reducing the cost of the sprinkling system considerably.

4.2.4.2.2 Leaching of Tailings

None of the mines mentioned above uses this technique, and no recent studies have been conducted to determine the feasibility of leaching tailings. Laboratory tests have shown that 98 percent of the nuclides could be leached from the tailings with nitric acid. However, the residual radium concentrations would be at least an order of magnitude greater than that typically found in western U.S. soils. Therefore, after acid leaching, dust suppression would still have to be effected for the dry tailings.

The cost to construct and operate a nitric acid leaching mill for 15 years is estimated to be $283 million. This estimate is based on the cost contained in the NRC's Draft Generic Environmental Impact Statement on Uranium Milling as updated using the 1988 ENR Construction Cost Index (NRC79).

4.2.4.2.3 Solidification of Tailings

Solidification agents such as concrete or asphalt can be added to the tailings to control dust at the piles. This technique had not been used at any of the mines contacted during preparation of this cost analysis.

Asphalt fixation would require the construction of a facility to heat the asphalt, mix the asphalt with the tailings, and dry the asphalt/tailings mixture. The capital cost for construction of this facility is estimated to be $6.6 million. Approximately 0.75 MT of asphalt would be required for each metric ton of dry tailings. The current cost of asphalt is $33/MT, resulting in an estimated average annual cost of $7.5 million over 15 years of operation. The fuel requirements for the wiped film evaporator (to evaporate water from the asphalt/tailings mixture) will be about 50 MT of coal per day. The average annual cost of coal is estimated to be $1.2 million. The total estimated cost for this alternative is $138 million.

The cost for constructing and operating mixing equipment and related facilities required for solidifying the tailings with cement is estimated to be $1.8 million. One part cement to five

parts tailings would be required to solidify the tailings. The current cost of cement is $66/MT. The average yearly cost of cement is estimated to be $4 million over 15 years of operation. The total estimated cost for this alternative is $62 million.

4.2.4.2.4 Application of Stabilizers to Tailings Surfaces

Various chemicals are being used to stabilize the surface of tailings piles. These stabilizers are sprayed on the surface of the piles to form a cover. Studies have shown that these stabilizers are temporary control measures which require continued inspection and maintenance. Neilson, Inc., of Durango, Colorado, is responsible for dust control at M. K. Ferguson Mines. It has been using a polymer (Nelco 8803) and a latex binder (CPB 12), manufactured by WEENDON of Moab, Utah. The polymer has been found to have a short life span, whereas the latex binder proved to be effective for more than a year.

The current cost of applying a latex binder to tailings piles is about $1,650/ha. The average annual cost for this alternative is estimated to be $2,280/ha. The total estimated cost for this alternative, assuming that each 30 ha would be treated annually, is $1.03 million. If the tailings can be deposited such that 2 ha of tailings are added to the tailings pile each year, the total cost can be reduced by approximately $400,000.

4.2.4.2.5 Covering of Tailings

Tailings can be covered with natural or artificial covers either above or below the ground surface. Natural cover materials include native soil, gravel, and clay. Artificial materials include asphalt and plastic. Asphalt and plastic are less effective than clay in withstanding mechanical stresses and resisting deterioration in sunlight.

The most effective dust control plan for dry tailings is provided by a combination of natural and artificial cover materials. A cap consisting of a synthetic liner overlain by sand and native soil (planted with native grasses) will reduce infiltration of rain water, control tailings dust, and require minimal maintenance. In arid regions, a clay cap with riprap on the surface would be very effective in eliminating exposure to airborne tailings dust.

The cost estimates for this alternative are based on the following assumptions: (a) embankment construction for the above-ground surface alternative would be completed in the first year of operation; (b) the excavation of the disposal site for the below-ground surface alternative would be completed in the first year of operation; (c) deposition of the tailings would begin in the first year; (d) a 0.6-m clay cap would be constructed in either alternative and the source of the clay would be 50 km from the embankment/excavation; (e) tailings compaction and covering

would be performed throughout the 15 years of operation; and (f) interim dust control such as wetting or application of stabilizers to the surface of the piles would not be required because the tailings would be continuously covered with capping materials. These cost estimates also include design and construction management costs and a yearly escalation of 5 percent.

4.2.4.2.5.1 Above-ground Encapsulation

Site preparation for above-ground encapsulation requires removal of the topsoil over a 46-ha area and the construction of earthen dikes along the periphery of the disposal area. Removal of the top soil (276,000 cubic meters) is estimated to cost $1.08 million ($3.91/m^3). The cost for construction of the earthen embankments would be approximately $4.05 million. The embankments would be approximately 8 m in height, 10 m wide at the top, and 42 m wide at the bottom. During deposition, the tailings would be compacted and covered at an average annual cost of approximately $1.2 million. The cover would consist of 2.7 m of fill material from the site and 0.6 m of clay. The total cost of this alternative is estimated to be $23 million.

A plastic liner could be added to the capping system to increase its effectiveness or substituted for clay in areas where clay is not available at a reasonable cost. PVC, HDPE, or Hypalon cover material could be used at estimated total costs of $2.6 million, $3 million, and $4.3 million, respectively. These estimates assume that 2 ha would be covered each year during 15 years of operation. Many manufacturers highly recommend HDPE for this particular use due to its resistance to ultraviolet light deterioration. HDPE has a life expectancy of at least 10 years for application as a cover material.

In arid regions, 0.5 m of riprap could be used in place of top soil and seeding. The estimated cost for placing 150,000 m^3 of riprap on the 30-ha site over 15 years of operation is $3.9 million.

Another alternative is to solidify the top 0.5 m of the encapsulation site with cement. The total portland cement requirement would be 30,000 m^3 which would be mixed with the top 2.5 m of tailings during 15 years of operation. The estimated total cost for this alternative is $6.9 million.

4.2.4.2.5.2 Below-Ground Encapsulation

The differences between the costs for above- and below-ground encapsulation are that for the below-ground alternative, embankments would not have to be constructed, a disposal site would have to be excavated, and the tailings would have to be transported to the disposal site. The average yearly and total costs estimated for compacting and covering the tailings are the same as for the above-ground alternative.

Excavation costs including loading, hauling, and depositing materials less than 1 km from the excavation site are estimated to be $10 million. The average yearly cost to excavate and transport the tailings to the disposal site (assuming the site is 1 km from the tailings pond) is estimated to be $345,000. The total estimated cost for this alternative is $33 million.

4.2.4.2.6 Summary

A summary of the estimated costs for each of the alternatives is presented in Table 4-10.

Table 4-10. Estimated costs for alternatives to control windblown particulates from tailings piles.

Alternative	Estimated Costs (Dollars in Millions) Per Hectare	Total
Wetting Using Rented Trucks	0.27	8.2
Wetting Using Purchased Trucks	0.17	5.1
Wetting Using Stationary System	0.06	1.9
Acid Leaching	9.40	283.0
Solidification with Asphalt	4.60	138.0
Solidification with Cement	2.10	62.0
Application of Latex Binders	0.03	1.0
Above-Ground Encapsulation	0.77	23.0
Below-Ground Encapsulation	1.10	33.0

The application of latex stabilizers to the tailings piles is the most cost-effective method for controlling dust from the piles. This method is currently in use and has proved effective for up to one year per application.

The stationary sprinkling system is the second most cost-effective alternative. When installed and operated by existing maintenance personnel, this alternative is more cost-effective than the application of latex stabilizers. The added advantage is that evaporation of the tailings pond water, an operational goal of each milling operation, would be substantially increased.

4.3 URANIUM CONVERSION FACILITIES

4.3.1 General Description

The uranium conversion facility purifies and converts uranium oxide (yellowcake) to volatile uranium hexafluoride (UF_6), the chemical form in which uranium enters the enrichment plant.

4.3.1.1 Uranium Conversion Operations in the United States

Currently, two commercial uranium hexafluoride (UF_6) production facilities are operating in the United States, the Allied Chemical Corporation facility at Metropolis, Illinois, and the Kerr-McGee Nuclear Corporation facility at Sequoyah, Oklahoma. The Allied Corporation facility, a dry-process plant in operation since 1968, has the capacity to produce about 12,600 MT of uranium per year in the form of UF_6. The Kerr-McGee facility is a wet process plant in operation since 1970, with a capacity of about 9,100 MT per year (AEC74, Do88).

4.3.1.2 Process Description

Two industrial processes are used for uranium hexafluoride production, the dry hydrofluor method and the wet solvent extraction method. Each method produces roughly equal quantities of uranium hexafluoride; however, the radioactive effluents from the two processes differ substantially. The hydrofluor method releases radioactivity primarily in the gaseous and solid states, while the solvent extraction method releases most of its radioactive wastes dissolved in liquid effluents.

4.3.1.2.1 Dry Hydrofluor Process

The hydrofluor process consists of reduction, hydrofluorination, and fluorination of the ore concentrates to produce crude uranium hexafluoride. Fractional distillation is then used to obtain purified UF_6. Impurities are separated either as volatile compounds or as a relatively concentrated and insoluble solid waste that is dried and drummed for disposal.

4.3.1.2.2 Solvent Extraction Process

The solvent extraction process employs a wet chemical solvent extraction step at the start of the process to purify the uranium for subsequent reduction, hydrofluorination, and fluorination steps. The wet solvent extraction method separates impurities by extracting the uranium from the organic solvent, leaving the impurities dissolved in an aqueous solution. The raffinate (barren waste from the solvent extraction process) is impounded in ponds at the plant site.

4.3.1.3 Existing Emission Controls

No irradiated material is handled by conversion facilities; therefore, the radionuclides present are those that occur in nature. These radionuclides include thorium, uranium, and their respective decay products. Uranium is the major source of radioactivity in the emissions. Possible chemical species of uranium effluents include U_3O_8, UO_2, UF_4, UF_6, $(NH_4)_2U_2O_7$, and UO_2F_2.

4.3.1.3.1 Dry Hydrofluor Process

Uranium emissions are higher in the dry hydrofluor process than in the solvent extraction process, since large amounts of dust are produced in the initial sampling, pre-treatment, and reaction stages. During the low temperature steps such as sampling, mixing, and crushing, exhaust systems that vent to baghouses are used to control emissions. During high temperature process steps that may emit gaseous as well as particulate effluents, a combination of metal filters and scrubbers is used.

4.3.1.3.2 Solvent Extraction Process

In the wet solvent extraction method, uranium is present as dissolved uranyl nitrate, a chemical species that may also appear in emissions. Thus, uranium may be released as both soluble and insoluble aerosols. The discharge to the environment is through low stacks and vents.

4.3.2 Basis for the Dose and Risk Assessment of Uranium Conversion Facilities

4.3.2.1 Radionuclide Emissions

4.3.2.1.1 Operational Experience and Projected Future Emissions

The radionuclide emission rates given in Table 4-11 are derived from measurements of releases from vents and stacks as reported in the semi-annual environmental monitoring reports submitted by the facilities to the NRC. These values are averaged over the period 1984 to 1987.

Table 4-11. Reported atmospheric radioactive emissions for uranium conversion facilities (Ci/y).

Radionuclide	Metropolis[a] 1984 - 1987	Metropolis[b] 1979 - 1982	Sequoyah[a] 1984 - 1987
Ra-226	1.0 E-5	6.7 E-4	5.0 E-3
Th-230	5.0 E-4	6.6 E-3	5.0 E-3
U-Natural	1.0 E-1	2.2 E-1	5.0 E-2

(a) From semi-annual environmental monitoring reports, 1984 through 1987.
(b) From NRC84.

Table 4-11 also includes measured data for Metropolis that were obtained from 1979 to 1982. These values, in combination with the 1984 to 1987 values, show the trend toward lower emission rates for all radionuclides.

It is anticipated that the existing uranium conversion plants will be able to accommodate future uranium demand by nuclear power plants. The radionuclide emissions are proportional to the quantity of uranium produced and thus should remain relatively constant.

4.3.2.1.2 Source Terms Used in the Assessment

The annual atmospheric radioactive emissions assumed for each conversion facility are presented in Table 4-12. These values are averages of the measured releases for each facility for 1984 through 1987.

4.3.2.2 Site Characteristics Used in the Assessment

The plant parameters used in the assessment are specific to each site (NRC84, NRC85b). Each stack height is an average of all release points for that plant. In calculating the average, the data were weighted by the ventilation rate of each release point. Detailed information on the parameters supplied to the AIRDOS/DARTAB/RADRISK computer codes is presented in Appendix A.

The ingestion pathway food source data assume fractions representative of an urban/low productivity site.

4.3.3 Results of the Dose and Risk Assessment of Uranium Conversion Facilities

The estimated annual radiation dose equivalents and fatal cancer risks from the uranium conversion facilities are presented in Tables 4-13 and 4-14.

The annual radiation dose equivalents from both the dry and wet conversion processes result primarily from exposure to uranium-234 and uranium-238 (51 percent and 46 percent for the dry process, respectively; 39 and 35 percent for the wet process, respectively). In the wet process, there is also about a 22 percent contribution from thorium-230. Inhalation is the dominant exposure pathway in each case.

4.3.3.1 Doses and Risks to the Nearby Individual

Doses and fatal cancer risks to the nearby individuals are presented in Tables 4-13 and 4-14, respectively. The nearby individuals are located 500 meters from the release point for both facilities. The organs listed in Table 4-13 are those where the dose is estimated to contribute 10 percent or more of the total fatal cancer risk. For the reference dry process facility, the maximum organ dose equivalents to the nearby

Table 4-12. Atmospheric radioactive emissions assumed for reference dry and wet process uranium conversion facilities.

Facility	Radionuclide	Emissions (Ci/y)	Solubility Class (%)[a] D	W	Y	Reference
Allied Corp, Metropolis, IL	U-Natural[b]	0.10000	56	30	14	NRC84
	Th-230[b]	0.00050	0	0	100	
	Ra-226[b]	0.00001	0	100	0	
Sequoyah Fuels Sequoyah, OK	U-Natural[c]	0.050	65	5	30	NRC85b
	Th-230[c]	0.005	0	0	100	
	Ra-226[c]	0.005	0	100	0	

(a) Solubility classes D, W, and Y refer to the retention of inhaled radionuclides in the lungs; representative half-times for retention are less than 10 days for class D, 10-100 days for class W, and greater than 100 days for class Y.

(b) Particle size 3.4 um.

(c)

Particle size (um)	% (Average: 1980-1984)
4.2 to 10.2	9.3
2.1 to 4.2	9.7
1.3 to 2.1	5.5
0.69 to 1.3	6.5
0.39 to 0.69	13.5
0.00 to 0.39	55.3

Data taken from NUREG-1157 (NRC85b).

Table 4-13. Radiation dose equivalent rates from atmospheric radioactive emissions from reference uranium conversion facilities.

Process	Organ	Nearby Individuals (mrem/y)	Regional Population (person-rem/y)
Dry	Lungs	1.4E+1	2.1E+1
	Endosteum	8.3E+0	5.7E+1
	Remainder	-	4.9E+0
Wet	Lungs	2.5E+1	1.9E+1
	Endosteum	1.4E+1	3.3E+1
	Remainder	-	2.0E+0

Table 4-14. Fatal cancer risks due to atmospheric radioactive emissions from reference uranium conversion facilities.

Process	Nearby Individuals Lifetime Fatal Cancer Risk	Regional (0-80 km) Population Deaths/y
Dry	3E-5	8E-4
Wet	4E-5	6E-4

individuals are 14 mrem/y to the lungs and 8 mrem/y to the endosteum. For the reference wet process facility, the maximum organ dose equivalents are 25 mrem/y to the lungs and 13 mrem/y to the endosteum.

The estimated lifetime risk of fatal cancer to the nearby individuals is estimated to be 3E-5 for the reference dry process facility and 4E-5 for the reference wet process facility.

4.3.3.2 Doses and Risks to the Regional Population

Doses and fatal cancer risks to the regional population due to atmospheric releases of radionuclides from uranium conversion facilities are also summarized in Tables 4-13 and 4-14, respectively. Here also, the organs listed in Table 4-13 are those where the dose is estimated to contribute 10 percent or more of the total fatal cancer risk. For the reference dry process facility, maximum organ dose equivalents are 21 person-rem/year to the lungs and 57 person-rem/year to the endosteum. For the reference wet process facility, the maximum organ dose equivalents are 19 person-rem/year to the lungs and 33 person-rem/year to the endosteum.

The lifetime risks to the regional population are estimated to be 8E-4 and 6E-4 fatal cancers per year of operation for the reference dry and wet process facilities, respectively.

4.3.3.3 Projection of Fatal Cancers Per Year and the Risk Distribution for the Uranium Conversion Segment of the Uranium Fuel Cycle

Based on the results for the reference dry process and wet process uranium conversion facilities, the total risk from all uranium conversion facilities is estimated to be 1E-3 fatal cancers per year of operation. This estimate is based on the assumption of continuing operation of one dry process facility and one wet process facility.

The estimated distribution of the estimated lifetime total cancer risk projected for the uranium conversion segment of the

uranium fuel cycle is presented in Table 4-15. This distribution is based on the estimated 500,000 persons around the dry process facility and 430,000 persons around the wet process facility.

Table 4-15. Estimated distribution of lifetime fatal cancer risks projected for uranium conversion facilities.

Risk Interval	Number of Persons	Deaths/y
1E-1 to 1E+0	0	0
1E-2 to 1E-1	0	0
1E-3 to 1E-2	0	0
1E-4 to 1E-3	0	0
1E-5 to 1E-4	90	2E-5
1E-6 to 1E-5	9,900	3E-4
< 1.0E-6	920,000	1E-3
Totals	930,000	1E-3

4.3.4 Supplementary Control Options and Costs

Well-proven particulate control technologies such as fabric filters and scrubbers can be added to the existing control systems at uranium hexafluoride conversion plants to reduce emissions. The selection of additional controls must take into account the presence of moisture and corrosive contaminants (particularly fluorine) in some of the exhaust lines.

A previous study has estimated the cost of providing additional fabric filters for both the wet and dry process plants (TEK81). The estimated capital costs of the systems (in 1979 dollars) are approximately $2.1 million and $4.5 million for the wet and dry plant, respectively. The total annual costs (operating and maintenance) for the wet and dry process plants are approximately $0.6 million and $1.3 million, respectively.

4.4 FUEL FABRICATION FACILITIES

4.4.1 General Description

Light water reactor (LWR) fuels are fabricated from uranium that has been enriched in uranium-235 at a gaseous diffusion plant. There natural uranium in the form of UF_6 has been processed to increase the uranium-235 content from 0.7 percent up to 2 to 4 percent by weight. The enriched uranium hexafluoride product is shipped to LWR fuel fabrication plants where it is converted to solid uranium dioxide pellets and inserted into zirconium alloy (Zircaloy) tubes. The tubes are fabricated into fuel assemblies which are shipped to nuclear power plants.

4.4.1.1 Fuel Fabrication Facilities in the United States

Table 4-16 presents a list of the seven licensed uranium fuel fabrication facilities in the United States which fabricate commercial LWR fuel. Of the seven, only five had active operating licenses as of January 1, 1988. Of those five facilities, two use enriched uranium hexafluoride to produce completed fuel assemblies and two use uranium dioxide. The other facility converts UF_6 to UO_2 and recovers uranium from scrap materials generated in the various processes of the plant.

4.4.1.2 Process Description

The processing technology used for uranium fuel fabrication consists of three basic operations: (1) chemical conversion of UF_6 to UO_2; (2) mechanical processing including pellet production and fuel-element fabrication; and (3) recovery of uranium from scrap and off-specification material. The most significant potential environmental impacts result from converting UF_6 to UO_2 and from the chemical operations involved in scrap recovery.

4.4.1.2.1 Chemical Conversion of UF_6 to UO_2

Two methods are currently used in UF_6 conversion and UO_2 powder production: the ammonium diuranate (ADU) wet process and the direct-conversion (DC) dry process.

The ADU process converts UF_6 to $(NH_4)_2U_2O_7$ which is then calcined to UO_2 powder. The UF_6 which is received from the enrichment facility is vaporized and transferred to the reaction vessels. The UF_6 is hydrolyzed with water and neutralized with NH_4OH at a pH of 8 to 9 to form a slurry of ADU in an aqueous solution of ammonium fluoride and ammonium hydroxide. The ADU is recovered in a centrifuge and a clarifier and is subsequently dried and calcined to form UO_2 powder.

The DC process hydrolyzes the UF_6 and reduces the uranium directly to UO_2. Cylinders of UF_6 are placed in steam-heated cabinets to vaporize the contained UF_6. The UF_6 gas enters a first reactor containing a bed of UO_2F_2 particles which is fluidized by steam. The gas reacts with the steam on the hot, wet surface of the particles to form a coating of UO_2F_2. The reaction is:

$$UF_6 + 2\ H_2O \rightarrow UO_2F_2 + 4\ HF$$

The particles of UO_2F_2, which are approximately 120 um in diameter, overflow to a product hopper. After the desired amount is accumulated, the batch is transferred to the next vessel where the bed is fluidized by steam and ammonia. Here it is reduced to UO_2. A high percentage of the UO_2F_2 is converted to UO_2 in the second reactor, but the product goes into a third reactor where, by the same process, the reaction is carried to completion.

Table 4-16. Light water reactor commercial fuel fabrication facilities licensed by the Nuclear Regulatory Commission as of June 1987.

Licensee	Facility Location	Operations	Process Used to convert UF_6 to UO_2	Final Product	1980 Operating Capacity (t/yr)	Active Operating License as of June 1987
Advanced Nuclear Fuels	Richland, WA	LEU[a] Conversion (UF_6 to UO_2), Fabrication & Scrap Recovery; Commercial LWR Fuel	Dry & Wet	Complete fuel assemblies	650	No
Babcock & Wilcox - CNFP	Lynchburg, VA	LEU Fabrication; Commercial LWR Fuel	——	Use UO_2 powder to produce fuel assemblies	(250)	Yes
Babcock & Wilcox	Apollo, PA	Authorized decontamination; pending Nuclear Reactor Service Operations	Wet	UO_2 powder	250	No
Combustion Engineering	Windsor, CT	LEU Fabrication; Commercial LWR Fuel	——	Use UO_2 powder to produce fuel assemblies	(150)	Yes
Combustion Engineering	Hematite, MO	LEU Conversion (UF_6 to UO_2) & Scrap Recovery	Dry	UO_2 powder	150	Yes
General Electric	Wilmington, NC	LEU Conversion (UF_6 to UO_2) & Fabrication; Commercial LWR Fuel	Dry & Wet	Complete fuel assemblies	1,500	Yes
Westinghouse Electric	Columbia, SC	LEU Conversion (UF_6 to UO_2), Fabrication & Scrap Recovery; Commercial LWR Fuel	Dry & Wet	Complete fuel assemblies	750	Yes
				Total	3,300	

(a) Low enrichment uranium.

The gaseous effluent from each of the three converter vessels (reactors) passes through a sintered nickel filter in the top of each vessel before going to the gaseous effluent treatment system where HF and particulates are removed from the off-gas stream.

4.4.1.2.2 Mechanical Processing

Mechanical processing involves (1) pretreatment of UO_2 powder by comminution, compaction, and granulation to the desired size distribution; (2) pelletizing; (3) sintering the pellets under a reducing atmosphere; (4) grinding to final dimensions; (5) washing and drying the pellets; (6) loading the pellets into Zircaloy tubes, fitting with end caps, and welding the end cap to form fuel rods; and (7) assembling fuel rods to form finished fuel elements.

4.4.1.2.3 Scrap Recovery Operations

A scrap recovery operation is important to the profitable operation of a fuel fabrication plant. This system recycles the scrap materials generated in the various processes of the plant to recover the value of the scrap.

4.4.1.3 Existing Emission Controls

Emission control technology differs for ADU and DC facilities. In either kind of facility, both process off-gases and ventilation air are treated.

In the ADU facility, process gas passes through wet (water) scrubbers (90 percent removal of entrained solids) and HEPA filters before release to the atmosphere. Ventilation off-gases go through roughing filters and HEPA filters before release to the atmosphere.

In the DC facility, process gas passes through sintered nickel filters, with trapped solids returned to the process; off-gases continue to KOH scrubbers (for HF removal), then are diluted for release to the atmosphere. Ventilation off-gases pass through roughing filters and HEPA filters and are released.

4.4.2 Basis for the Dose and Risk Assessment of Fuel Fabrication Facilities

4.4.2.1 Radionuclide Emissions

4.4.2.1.1 Operational Experience and Projected Future Emissions

Table 4-17 presents reported uranium effluents from 1983 through 1987 for each of the fuel fabrication facilities with current operating licenses. The data in Table 4-17 show that the Westinghouse and General Electric facilities have releases 10 to

Table 4-17. Light water reactor commercial fuel fabrication facilities reported annual uranium effluent releases for 1983 through 1987 in μCi/y.

Licensee Location License No. Docket No.	Year	U-234	U-235	U-236	U-238	Total
Babcock and Wilcox-CNFP	1983	4.7 E+0	2.1 E-1	2.1 E-2	1.1 E+0	6.0 E+0
Lynchburg, VA	1984	5.6 E+0	2.5 E-1	2.3 E-2	1.3 E+0	7.2 E+0
SNM-116	1985	4.6 E+0	2.1 E-1	2.1 E-2	1.1 E+0	5.9 E+0
70-1201	1986	5.7 E+0	2.5 E-1	2.6 E-2	1.3 E+0	7.3 E+0
	1987	3.9 E+0	1.7 E-1	1.7 E-2	9.1 E-1	5.0 E+0
Combustion Engineering	1983	NA[a]	NA	NA	NA	3.9 E+1
Windsor, CT	1984	NA	NA	NA	NA	2.7 E+1
SNM-1067	1985	NA	NA	NA	NA	4.9 E+1
70-1100	1986	NA	NA	NA	NA	5.5 E+1
	1987	NA	NA	NA	NA	4.7 E+1
Combustion Engineering	1983	NA	NA	NA	NA	2.1 E+2
Hematite, MO	1984	NA	NA	NA	NA	4.2 E+1
SNM-33	1985	NA	NA	NA	NA	7.3 E+1
70-36	1986	NA	NA	NA	NA	6.7 E+2
	1987	NA	NA	NA	NA	2.8 E+2

(a)Not available; only total curies of uranium released reported to the NRC.

Table 4-17. Light water reactor commercial fuel fabrication facilities reported annual uranium effluent releases for 1983 through 1987 in μCi/y (continued).

Licensee Location License No. Docket No.	Year	U-234	U-235	U-236	U-238	Total
General Electric	1983	3.1 E+2	2.0 E+1	4.5 E+2	1.3 E+2	4.6 E+2
Wilmington, NC	1984	4.0 E+2	2.6 E+1	5.7 E+0	1.7 E+2	6.0 E+2
SNM-1097	1985	4.1 E+2	2.7 E+1	5.7 E+0	1.5 E+2	5.9 E+2
70-1113	1986	1.2 E+3	7.1 E+1	1.6 E+1	3.5 E+2	1.6 E+3
	1987	1.6 E+2	1.0 E+1	2.0 E+0	5.6 E+1	2.3 E+2[a]
Westinghouse Electric	1983	1.2 E+3	5.3 E+1	NR[b]	2.5 E+2	1.5 E+3
Columbia, SC	1984	1.5 E+3	1.2 E+2	NR	3.2 E+2	1.9 E+3
SNM-1107	1985	1.2 E+3	7.2 E+1	NR	3.1 E+2	1.6 E+3
70-1151	1986	1.1 E+3	5.3 E+1	NR	3.4 E+2	1.5 E+3
	1987	1.0 E+3	5.6 E+1	NR	3.1 E+2	1.4 E+3

(a) Second half of 1987 is not available but is assumed to be same as first half.
(b) NR denotes not reported. Values are small and not included in total.

100 times those of the Babcock and Wilcox and Combustion Engineering facilities. This is expected because the Westinghouse and General Electric plants start with uranium hexafluoride while the other two facilities begin the fuel fabrication process with UO_2.

The operating capacity of the existing commercial facilities in 1980 was about 3,300 tons/year. If planned facility expansions take place, the existing industry should be able to meet demands as high as 4,600 tons/year in the immediate future. Radionuclide emissions would be expected to remain proportional to this production rate.

4.4.2.1.2 Source Term Used in the Assessment

The atmospheric radioactive emissions assumed to be released each year by the reference fuel fabrication facility are presented in Table 4-18. These values, with the exception of uranium-236, represent the geometric mean of the reported effluent releases for the Westinghouse fuel fabrication facility for 1983 through 1987. The value for uranium-236 is based on release data for 1983 through 1987 as reported in the semi-annual environmental monitoring reports submitted to the NRC by the General Electric facility at Wilmington, North Carolina.

Table 4-18. Atmospheric radioactive emissions assumptions for reference fuel fabrication facility.

Radionuclide	Emissions (Ci/y)
U-234	1.2 E-3
U-235	6.7 E-5
U-236	1.6 E-5
U-238	3.0 E-4

4.4.2.2 Site Characteristics Used in the Assessment

The Westinghouse plant at Columbia, South Carolina, was used as the basis for the reference fuel fabrication facility. This is appropriate since all phases of fuel fabrication (i.e., both ADU and DC conversion of UF_6 to UO_2, mechanical fabrication of fuel assemblies, and scrap recovery) take place at this site.

The release point and climatological and demographic data supplied to the AIRDOS/DARTAB/RADRISK computer codes are listed in Appendix A. The climatological data are based on measurements taken at the U.S. Weather Bureau Station at Columbia Metropolitan Airport (NRC85a). Sets of hourly meteorological data obtained from the airport for 1984 through 1986 were used to develop wind frequency distributions for stability classes A through F. The demographic data represent the 1986 population estimates within 80 kilometers of the Westinghouse plant.

The ingestion pathway food source data assume fractions representative of an urban/low productivity site.

4.4.3. Results of the Dose and Risk Assessment for the Reference Fuel Fabrication Facility

The estimated annual radiation dose equivalent and fatal cancer risks from the reference facility are presented in Tables 4-19 and 4-20. The predominant exposure pathway is inhalation. The annual radiation dose is primarily from uranium-234 and uranium-238 (78 percent and 17 percent, respectively), for both nearby individuals and the regional population.

4.4.3.1 Doses and Risks to the Nearby Individuals

Estimates of the annual dose equivalent and fatal cancer risk to the nearby individuals due to the atmospheric emissions of radionuclides from the reference fuel fabrication facility are presented in Tables 4-19 and 4-20, respectively. The nearby individuals are located 500 meters from the release point. Lung is the only organ listed in Table 4-19, since it is the only organ for which the dose is estimated to contribute 10 percent or more of the total fatal cancer risk. The highest organ dose equivalent to the nearby individual is 2.2 mrem/y, to the lungs.

The lifetime risk of fatal cancer to nearby individuals from the reference fuel fabrication facility is estimated to be 4E-6.

4.4.3.2 Doses and Risks to the Regional Population

Estimates of the annual dose equivalent and fatal cancer risk to the regional population due to atmospheric emissions of radionuclides from the reference fuel fabrication facility are also presented in Tables 4-19 and 4-20. Here also, lung is the only organ listed in Table 4-19, since it is the only organ for which the dose is estimated to contribute 10 percent or more of the total fatal cancer risk. The maximum organ annual dose equivalent rate from the reference facility is 3.5 person-rem/year, to the lungs.

Table 4-19. Radiation dose equivalent rates from atmospheric radioactive emissions from model fuel fabrication facility.

Organ	Nearby Individuals (mrem/y)	Regional Population (person-rem/y)
Lungs	2.2E+0	3.5E+0

Table 4-20. Fatal cancer risks due to atmospheric radioactive emissions from reference fuel fabrication facility.

Nearby Individuals Lifetime Fatal Cancer Risk	Regional (0-80 km) Population Deaths/y
4E-6	8E-5

The incremental risk of fatal cancers in the regional population is estimated to be 8E-5 per year of operation for the reference facility.

4.4.3.3 Estimated Distribution of Lifetime Fatal Cancer Risks Projected for Fuel Fabrication Facilities

Based on the evaluation of the reference fuel fabrication facility, the total number of fatal cancers per year from all fuel fabricators is estimated to be approximately 4E-4. This estimate is based on the assumption of five operating fuel fabrication facilities.

The estimated distribution of the lifetime fatal cancer risk projected for all fuel fabricators is presented in Table 4-21. This distribution was based on the assumption of 3,900,000 persons around five active fuel fabrication facilities. The distribution does not account for any overlap in the populations exposed to radionuclides released from multiple facilities.

4.4.4 Supplementary Control Options and Costs

Because the predicted dose equivalents and resultant health risks to the nearby individuals and regional populations from atmospheric emissions of radionuclides from the reference fuel fabrication facility are low, no supplementary control options are evaluated.

Table 4-21. Estimated distribution of lifetime fatal cancer risks projected for all fuel fabrication facilities.

Risk Interval	Number of Persons	Deaths/y
1E-1 to 1E+0	0	0
1E-2 to 1E-1	0	0
1E-3 to 1E-2	0	0
1E-4 to 1E-3	0	0
1E-5 to 1E-4	0	0
1E-6 to 1E-5	50	3E-6
< 1.0E-6	3,900,000	4E-4
Totals	3,900,000	4E-4

4.5 NUCLEAR POWER FACILITIES

4.5.1 General Description

4.5.1.1 Nuclear Power Generation in the United States

As of December 1986, there were 100 operable nuclear power reactors in the United States, with a total generating capacity of 85,177 MWe. With only one exception (a high-temperature gas-cooled reactor), all of these nuclear power reactors are either boiling water reactors (BWR) or pressurized water reactors (PWR). Pressurized water reactors comprise approximately two-thirds of the light-water generating capacity. It is assumed this two-to-one PWR-BWR ratio will continue through the year 2000.

Table 4-22 presents a list of the commercial nuclear power reactors in the United States (DOE87). A recent update of nuclear power in the United States provided in Nuclear News (2/88) indicated 102 operable commercial nuclear power reactors.

4.5.1.2 Process Description

A light-water-cooled nuclear power station generates electricity using the same basic principles as a conventional fossil-fueled (oil or coal) power station except that the source of heat used to produce steam is provided by nuclear fission instead of combustion.

In a boiling water reactor, the coolant boils as it passes through the reactor. The resulting steam is passed through a turbine and a condenser. The condensed steam is then pumped back into the reactor. The energy removed from the steam by the turbine is transformed into electricity by a generator.

The process is the same in a pressurized water reactor except that the reactor coolant water is pressurized to prevent

Table 4-22. U.S. nuclear power generating units operable as of December 31, 1986 (DOE87).

State/Site	Utility	Unit Name	Type
Alabama			
Decatur	Tennessee Valley Authority	Browns Ferry 1	BWR
Decatur	Tennessee Valley Authority	Browns Ferry 2	BWR
Decatur	Tennessee Valley Authority	Browns Ferry 3	BWR
Decatur	Alabama Power	Joseph M. Farley 1	PWR
Decatur	Alabama Power	Joseph M. Farley 2	BWR
Arizona			
Wintersburg	Arizona Public Service	Palo Verde 1	PWR
Wintersburg	Arizona Public Service	Palo Verde 2	PWR
Arkansas			
Runnellville	Arkansas P & L	Arkansas Nuclear 1	PWR
Runnellville	Arkansas P & L	Arkansas Nuclear 2	PWR
California			
Avila Beach	Pacific Gas & Electric	Diablo Canyon 1	PWR
Avila Beach	Pacific Gas & Electric	Diablo Canyon 2	PWR
Clay Station	Sacramento Municipal Utility District	Rancho Seco	PWR
San Clemente	Southern Calif. Edison	San Onofre 1	PWR
San Clemente	Southern Calif. Edison	San Onofre 2	PWR
San Clemente	Southern Calif. Edison	San Onofre 3	PWR
Colorado			
Platteville	Public Service Co. of Colorado	Fort St. Vrain	HTGR
Connecticut			
Haddam Neck	Connecticut Yankee Atomic Power	Haddam Neck (Connecticut Yankee)	PWR
Waterford	Northeast Utilities	Millstone 1	BWR
Waterford	Northeast Utilities	Millstone 2	PWR
Waterford	Northeast Utilities	Millstone 3	PWR
Florida			
Florida City	Florida P & L	Turkey Point 3	PWR
Florida City	Florida P & L	Turkey Point 4	PWR
Ft. Pierce	Florida P & L	St. Lucie 1	PWR
Ft. Pierce	Florida P & L	St. Lucie 2	PWR
Red Level	Florida Power Corp.	Crystal River 3	PWR
Georgia			
Baxley	Georgia Power	Hatch 1	BWR
Baxley	Georgia Power	Hatch 2	BWR

Table 4-22. U.S. nuclear power generating units operable as of December 31, 1986 (continued) (DOE87).

State/Site	Utility	Unit Name	Type
Illinois			
Byron	Commonwealth Edison	Byron 1	PWR
Cordova	Commonwealth Edison	Quad-Cities 1	BWR
Cordova	Commonwealth Edison	Quad-Cities 2	BWR
Morris	Commonwealth Edison	Dresden 2	BWR
Morris	Commonwealth Edison	Dresden 3	BWR
Seneca	Commonwealth Edison	LaSalle 1	BWR
Seneca	Commonwealth Edison	LaSalle 2	BWR
Zion	Commonwealth Edison	Zion 1	PWR
Zion	Commonwealth Edison	Zion 2	PWR
Iowa			
Palo	Iowa Electric L & P	Duane Arnold	BWR
Kansas			
Burlington	Kansas City P & L	Wolf Creek	PWR
Louisiana			
St Francisville	Gulf State Utilities	River Bend 1	BWR
Taft	Louisiana P & L & Kansas G & E	Waterford 3	PWR
Maine			
Wicasset	Maine Yankee Atomic Power	Maine Yankee	PWR
Maryland			
Lusby	Baltimore G & E	Calvert Cliffs 1	PWR
Lusby	Baltimore G & E	Calvert Cliffs 2	PWR
Massachusetts			
Plymouth	Boston Edison	Pilgrim 1	BWR
Rowe	Yankee Atomic Electric	Yankee Rowe 1	PWR
Michigan			
Bridgman	Indiana & Michigan Elec.	Donald C. Cook 1	PWR
Bridgman	Indiana & Michigan Elec.	Donald C. Cook 2	PWR
Charlevoix	Consumers Power	Big Rock Point	BWR
Newport	Detroit Edison	Fermi 2	BWR
South Haven	Consumers Power	Palisades	PWR
Minnesota			
Monticello	Northern States Power	Monticello	BWR
Red Wing	Northern States Power	Prairie Island 1	PWR
Red Wing	Northern States Power	Prairie Island 2	PWR
Mississippi			
Port Gibson	Mississippi P & L	Grand Gulf 1	BWR

Table 4-22. U.S. nuclear power generating units operable as of December 31, 1986 (continued) (DOE87).

State/Site	Utility	Unit Name	Type
Missouri			
Felton	Union Electric	Callaway 1	PWR
Nebraska			
Brownsville	Nebraska Public Power	Cooper	BWR
Fort Calhoun	Omaha Public Power Dist.	Fort Calhoun 1	PWR
New Jersey			
Forked River	Jersey Central P & L	Oyster Creek 1	BWR
Salem	Public Service E & G & Philadelphia Electric	Salem 1	PWR
Salem	Public Service E & G & Philadelphia Electric	Salem 2	PWR
Salem	Public Service E & G	Hope Creek 1	BWR
New York			
Buchanan	Consolidated Edison	Indian Point 2	PWR
Buchanan	Power Authority of the State of New York	Indian Point 3	PWR
Rochester	Rochester Gas & Elec.	Robert E. Ginna	PWR
Oswego	Niagara Mohawk Power	Nine Mile Point 1	BWR
Scriba	Power Authority of the State of New York	James A. Fitzpatrick	BWR
North Carolina			
Coweas Ford Dam	Duke Power	McGuire 1	PWR
Coweas Ford Dam	Duke Power	McGuire 2	PWR
Southport	Carolina P & L	Brunswick 1	BWR
Southport	Carolina P & L	Brunswick 2	BWR
Ohio			
Oak Harbor	Cleveland Elec. Illum.	Davis-Besse 1	PWR
North Perry	Cleveland Elec. Illum.	Perry 1	BWR
Oregon			
Prescott	Portland General Elec.	Trojan	PWR
Pennsylvania			
Berwick	Pennsylvania P & E	Susquehanna 1	PWR
Berwick	Pennsylvania P & E	Susquehanna 2	PWR
Middletown	Metropolitan Edison	Three Mile Island 1	PWR
Lancaster	Philadelphia Electric & Public Service E & G	Peach Bottom 2	BWR
Lancaster	Philadelphia Electric & Public Service E & G	Peach Bottom 3	BWR
Pottstown	Philadelphia Electric	Limerick 1	BWR
Shippingport	Duquesne Light	Beaver Valley 1	PWR

Table 4-22. U.S. nuclear power generating units operable as of December 31, 1986 (continued) (DOE87).

State/Site	Utility	Unit Name	Type
South Carolina			
Clover	North Carolina Electric Membership Corp.	Catawba 1	PWR
Clover	North Carolina Municipal Power	Catawba 3	PWR
Hartsville	Carolina P & L	H. B. Robinson 2	PWR
Jenkinsville	South Carolina E & G	Summer 1	PWR
Seneca	Duke Power	Oconee 1	PWR
Seneca	Duke Power	Oconee 2	PWR
Seneca	Duke Power	Oconee 3	PWR
Tennessee			
Daisy	Tennessee Valley Authority	Sequoyah 1	PWR
Daisy	Tennessee Valley Authority	Sequoyah 2	PWR
Vermont			
Vernon	Vermont Yankee Nuclear Power	Vermont Yankee	BWR
Virginia			
Surry	Virginia Power Co.	Surry 1	PWR
Surry	Virginia Power Co.	Surry 2	PWR
Mineral	Virginia Power Co.	North Anna 1	PWR
Mineral	Virginia Power Co.	North Anna 2	PWR
Washington			
Richland	Washington Public Power Supply System	WNP 2	BWR
Wisconsin			
Carlton	Wisconsin Public Service	Kewaunee	PWR
Genoa	Dairy Land Power Corp.	La Crosse	BWR
Two Creeks	Wisconsin Elec. Power	Point Beach 1	PWR
Two Creeks	Wisconsin Elec. Power	Point Beach 2	PWR

boiling. Energy is transferred through a heat exchanger (steam generator) to a secondary system where the water does boil. Reactor coolant water is kept at high pressures by maintaining a closed system and electrically heating water in a tank called the pressurizer. After passage through the steam generator, the water is returned to the reactor. Secondary steam turns the turbine, is cooled in the condenser, and is pumped back into the steam generator.

During the fission process, radioactive fission products are produced and accumulate within the nuclear fuel. In addition, neutrons produced during fission interact within the fuel and coolant to produce radioactive activation products. A reactor may experience periodic fuel failure or defects which result in the leakage of some of the fission and activation products out of the fuel and into the coolant. Accordingly, a typical light water reactor will experience build-up of radioactive fission and activation products within the coolant. For both PWRs and BWRs, the radioactive contaminants that accumulate within the coolant are the source of radioactive emissions from the facility.

4.5.1.2.1 Boiling Water Reactors

For BWRs, the primary sources of routine gaseous emissions are from the off-gas treatment system and the building ventilation system exhaust.

The off-gas treatment system collects noncondensable gases and vapors which are exhausted at the condenser via the mechanical vacuum pump and air ejectors. The off-gases are processed through a series of delay systems and filters to remove airborne radioactive particulates and halogens and delay the release of gases, thereby allowing only small quantities of the longer-lived radioactive noble gases to be released.

Building ventilation systems are also a source of airborne radioactive emissions from BWRs. Airborne releases from the reactor building are due to primary coolant leakage. Releases from the turbine building are due to steam leakage. Releases from the auxiliary building are due to leakage from the liquid waste treatment system. Releases from the fuel handling facilities are associated with evaporation from the fuel pool.

4.5.1.2.2 Pressurized Water Reactors

In PWRs, there are four primary sources of radioactive emissions:

1. Discharges from the gaseous waste management system;

2. Discharges associated with the exhaust of noncondensable gases at the main condenser;

3. Discharges from the steam generator to blowdown exhaust; and

4. Radioactive gaseous discharges from the building ventilation exhaust, including the reactor building, reactor auxiliary building, fuel handling building, and turbine building.

The exhaust may pass through separate or combined exhaust points and typically passes through high efficiency particulate air (HEPA) filters and charcoal filters prior to discharge.

The gaseous waste management system collects fission products, mainly noble gases that accumulate in the primary coolant. A small portion of the primary coolant flow is continually diverted to the primary coolant purification, volume, and chemical control system to remove contaminants and adjust the chemistry and volume. During this process, noncondensable gases are stripped and routed to the gaseous waste management system which typically consists of a series of gas storage tanks where they are held long enough to allow short-lived radioactive gases to decay, thereby leaving relatively small quantities of longer-lived radionuclides to be released to the atmosphere.

The second source of radioactive emissions is at the main condenser, where noncondensable gases are stripped from the secondary system and exhausted to enhance the efficiency of energy conversion. The noncondensable gases may include small quantities of fission and activation products which can enter the secondary coolant system via primary coolant to secondary coolant leakage at the steam generators.

A third possible source of radioactive emissions is the exhaust of noncondensed vapors and gases associated with steam generator blowdown. A portion of the reservoir of secondary side water in the steam generators is routinely let down to the steam generator blowdown treatment system to help maintain the chemical purity of the secondary side coolant, thereby helping to reduce secondary side corrosion. Some treatment processes result in the generation of water vapor and noncondensable gases which, following filtration, are discharged to the environment.

The last category of radioactive emissions is the exhaust of airborne radioactive materials via the building ventilation exhaust. Leakage of primary and secondary coolant, steam leakage, evaporation from the fuel pool, and leakage from various liquid processing systems result in the accumulation of airborne radionuclides which are discharged via the building ventilation system exhaust.

4.5.1.3 Existing Emission Controls

A number of effluent and process controls are employed at an LWR to reduce radionuclide emissions to the atmosphere. Some of

the controls operate directly on the emissions prior to release, while the others indirectly reduce emissions by limiting the amount of radioactive materials that leak from process systems.

4.5.1.3.1 BWR Emission Controls

HEPA and charcoal filters are routinely used to remove particulate and radioiodine emissions from the various building ventilation exhausts. In addition, all BWRs employ a main condenser off-gas treatment system to filter and hold up airborne radionuclides vented by the mechanical vacuum pumps and the air ejection system. The off-gas treatment system typically consists of a delay line followed by cryogenically cooled charcoal delay systems. These systems increase the holdup times for noble gases.

Other indirect methods are also used to help reduce atmospheric emissions. Some of these systems include the following techniques:

1. Venting the gaseous emissions from the [mechanical] vacuum pump to the condenser virtually eliminates this source of radioiodine emission;

2. The steam generator blowdown flash tank is vented to the condenser or the blowdown is cooled, thereby precluding a vapor flash; and

3. Special provisions are taken to control steam leakage from steam line valves.

BWRs also employ turbine gland sealing systems which help to reduce the steam leakage from the turbine.

4.5.1.3.2 PWR Emission Controls

For PWRs, controls applied at the point of release include HEPA and charcoal filtration units. The HEPA filters are designed and tested to ensure 99.97 percent efficiency for particulate emissions. Charcoal filter efficiency for radioiodines varies depending on the depth of the charcoal filters, whether provisions exist to control the relative humidity of the discharge air, and numerous other factors. Efficiency for iodine removal on charcoal adsorbers ranges from a decontamination factor (ratio of the amount of radioactive material initially present to the amount remaining after processing) of 10 to 1,000, the typical value being 100 (Mo84).

In addition to filtration systems, PWRs employ gas decay tanks to collect and store noble gases which are stripped from the primary coolant via the chemical and volume control system. The holdup time provided by the gas decay tanks depends on the number and volume of each tank and the storage pressure. Typically, storage times are on the order of 60 to 90 days, which results in the decay of all but the long-lived noble gases.

Delay systems based on charcoal adsorption are also used, but to a lesser degree. In addition, some delay systems use a nitrogen cover gas which is continuously recycled. This results in virtually unlimited holdup of gaseous radionuclides that enter the system.

PWRs also employ internal containment cleanup systems which recycle the containment atmosphere and remove airborne particulates and radioiodines prior to venting the gas.

Other indirect methods are also used to help reduce atmospheric emissions. These systems include the three techniques described for BWR emissions (Section 4.5.1.3.1).

4.5.2 Basis for the Dose and Risk Assessment of Power Reactor Facilities

4.5.2.1 Radionuclide Emissions

4.5.2.1.1 Operational Experience and Projected Future Emissions

Tables 4-23 and 4-24 present the geometric mean and standard deviation for releases of selected radionuclides during 1981 through 1985 for BWRs and PWRs respectively. For BWRs, the annual emissions for each radionuclide have been decreasing with time. The emission rate for PWRs has remained stable for tritium, iodine-131, and xenon-133 and has decreased for cesium-137.

The future of nuclear power in the United States is uncertain. The principal factors affecting the longer term future of nuclear power are the demand for electricity, interest rates, the price of oil, public attitude, and the regulatory climate. The probable range of nuclear capacity by the year 2000 is projected to be from 100 to 110 plants.

4.5.2.1.2 Source Terms Used in the Assessment

Tables 4-25 and 4-26 present the source terms assumed for the model BWRs and PWRs respectively. These source terms are based on the respective geometric means for concentrations of tritium, iodine-131, krypton-85m, krypton-85, krypton-87, krypton-88, xenon-131m, xenon-133, xenon-135m, xenon-135, xenon-138, and cesium-137 in reported airborne releases for 1985. These radionuclides were chosen since they contribute the majority of the dose. The source terms for the remaining radionuclides were calculated based on their ratio to either iodine-131, xenon-133, or cesium-137 as obtained by examining these ratios for nuclear power plants that have release rates close to the geometric mean values.

Table 4-23. Geometric mean and standard deviation by year for selected radionuclides for boiling water reactors in the United States for 1981 through 1985 in μCi/y.

	H-3		I-131		Kr-85m		Kr-85	
	Geometric		Geometric		Geometric		Geometric	
Year	Mean	Std. Dev.	Mean	Std. Dev.	Mean	Std. Dev.	Mean	Std. Dev.
1981	18	3.7	4.0E-2	7.5	353	9.0	6.8	36
1982	19	3.1	4.0E-2	8.2	410	10	3.0	150
1983	14	5.3	3.4E-2	9.4	195	65	13.0	112
1984	13	2.5	1.3E-2	12	203	22	14.0	14
1985	12	3.8	1.1E-2	6.8	51	8.3	2.9	39

	Kr-87		Kr-88		Xe-131m		Xe-133m	
	Geometric		Geometric		Geometric		Geometric	
Year	Mean	Std. Dev.	Mean	Std. Dev.	Mean	Std. Dev.	Mean	Std. Dev.
1981	451	11	661	12	28	41	69	7.3
1982	265	30	502	28	3.2	61	46	4.3
1983	240	60	461	74	51	24	34	79
1984	182	25	453	20	127	20	34	18
1985	57	15	77	15	29	23	30	12

Table 4-23. Geometric mean and standard deviation by year for selected radionuclides for boiling water reactors in the United States for 1981 through 1985 in μCi/y. (continued).

Year	Xe-133 Geometric Mean	Xe-133 Geometric Std. Dev.	Xe-135m Geometric Mean	Xe-135m Geometric Std. Dev.	Xe-135 Geometric Mean	Xe-135 Geometric Std. Dev.
1981	1180	15	421	10	711	18
1982	1980	8.2	502	8.4	1650	7.0
1983	1390	29	417	12	1250	6.4
1984	1400	14	122	12	617	16
1985	633	14	57	22	377	8.5

Year	Xe-138 Geometric Mean	Xe-138 Geometric Std. Dev.	Cs-137 Geometric Mean	Cs-137 Geometric Std. Dev.
1981	1330	12	9.8E-4	7.1
1982	1320	9.5	8.0E-4	4.7
1983	825	13	4.6E-4	4.9
1984	195	22	3.5E-4	9.5
1985	70	150	1.6E-4	15

Table 4-24. Geometric mean and standard deviation by year for selected radionuclides for pressurized water reactors in the United States for 1981 through 1985 in μCi/y.

	H-3		I-131		Kr-85m		Kr-85	
	Geometric		Geometric		Geometric		Geometric	
Year	Mean	Std. Dev.	Mean	Std. Dev.	Mean	Std. Dev.	Mean	Std. Dev.
1981	11	7.1	5.7E-3	9.6	1.2	17	6.0	14
1982	13	6.0	4.5E-3	11	2.7	15	10	7.9
1983	22	7.4	5.6E-3	10	1.3	33	23	310
1984	24	6.9	5.7E-3	11	1.2	10	6.6	11
1985	15	5.0	3.1E-3	7.2	0.6	26	5.6	13

	Kr-87		Kr-88		Xe-131m		Xe-133m	
	Geometric		Geometric		Geometric		Geometric	
Year	Mean	Std. Dev.	Mean	Std. Dev.	Mean	Std. Dev.	Mean	Std. Dev.
1981	5.2E-1	46	4.9E-1	54	6.6	12	4.7	7.7
1982	6.6E-1	48	7.1E-1	31	5.4	6.6	8.1	8.2
1983	7.0E-1	39	6.2E-1	54	5.1	18	4.4	11
1984	2.2E-1	34	8.0E-1	16	1.4	392	6.8	12
1985	1.8E-1	31	5.7E-1	20	2.3	30	4.7	15

Table 4-24. Geometric mean and standard deviation by year for selected radionuclides for pressurized water reactors in the United States for 1981 through 1985 in μCi/y (continued).

Year	Xe-133 Geometric Mean	Xe-133 Geometric Std. Dev.	Xe-135m Geometric Mean	Xe-135m Geometric Std. Dev.	Xe-135 Geometric Mean	Xe-135 Geometric Std. Dev.
1981	1100	8.8	4.2E-1	313	33	10
1982	1430	7.2	4.8E-1	75	47	9.8
1983	770	11	4.9E-1	70	20	13
1984	689	13	2.7E-1	74	38	8.5
1985	1010	6.6	5.9E-1	38	35	7.8

Year	Xe-138 Geometric Mean	Xe-138 Geometric Std. Dev.	Cs-137 Geometric Mean	Cs-137 Geometric Std. Dev.
1981	0.5	290	3.4E-5	56
1982	0.9	15	4.3E-5	19
1983	1.4	30	2.9E-5	70
1984	0.4	9.5	1.0E-4	16
1985	0.8	13	5.7E-5	8.2

Table 4-25. Atmospheric radioactive emissions assumed for model boiling water reactor.

Radionuclide	Annual Emissions (μCi/y)	Reference Radionuclide	Ratio	Reference Plant
H-3	1.2E+1	H-3*	-	-
I-131	1.1E-2	I-131*	1.00	LaSalle 1 & 2
I-132	2.9E-2	I-131	2.71	LaSalle 1 & 2
I-133	7.5E-2	I-131	7.02	LaSalle 1 & 2
I-134	2.1E-2	I-131	1.96	LaSalle 1 & 2
I-135	2.0E-1	I-131	18.5	LaSalle 1 & 2
Kr-85m	5.1E+1	Kr-85m*	-	-
Kr-85	2.9E+0	Kr-85*	-	-
Kr-87	5.7E+1	Kr-87*	-	-
Kr-88	7.7E+1	Kr-88*	-	-
Xe-131m	2.9E+1	Xe-131m*	-	-
Xe-133m	2.9E+1	Xe-133m*	-	-
Xe-133	6.3E+2	Xe-133*	-	-
Xe-135m	5.7E+1	Xe-135m*	-	-
Xe-135	3.8E+2	Xe-135*	-	-
Xe-138	7.0E+1	Xe-138*	-	-
N-13	7.2E+0	Cs-137	4.66E+4	J.A. Fitzpatrick
Ar-41	4.3E+1	Cs-137	2.80E+5	J.A. Fitzpatrick
Cr-51	1.6E-3	Cs-137	10.0	J.A. Fitzpatrick
Mn-54	2.2E-4	Cs-137	1.39	J.A. Fitzpatrick
Co-58	1.1E-4	Cs-137	0.72	J.A. Fitzpatrick
Co-60	1.8E-3	Cs-137	11.90	J.A. Fitzpatrick
Zn-65	1.2E-4	Cs-137	0.75	J.A. Fitzpatrick
Sr-89	6.9E-3	CS-137	44.30	J.A. Fitzpatrick
Sr-90	3.1E-4	Cs-137	2.02	J.A. Fitzpatrick
Nb-95	3.8E-6	Cs-137	2.43E-2	J.A. Fitzpatrick
Zr-95	3.8E-6	Cs-137	2.43E-2	J.A. Fitzpatrick
Cs-137	1.6E-4	Cs-137*	1.00	J.A. Fitzpatrick
Ba-140	9.8E-3	Cs-137	63.20	J.A. Fitzpatrick
La-140	9.8E-3	Cs-137	63.20	J.A. Fitzpatrick

*Geometric mean calculated from 1985 reported atmospheric radioactive emissions for U.S. boiling water reactors.

Table 4-26. Atmospheric radioactive emissions assumed for model pressurized water reactor.

Radionuclide	Annual Emissions (μCi/y)	Reference Radionuclide	Ratio	Reference Plant
H-3	1.5E+1	H-3*	-	-
I-131	3.1E-3	I-131*	1.00	Arkansas One 1
I-132	1.8E-6	I-131	8.70E-4	Arkansas One 1
I-133	2.5E-4	I-131	0.04	Arkansas One 1
I-135	9.2E-7	I-131	3.00E-4	Arkansas One 2
Kr-85m	6.4E-1	Kr-85m*	-	-
Kr-85	5.6E+0	Kr-85*	-	-
Kr-87	1.8E-1	Kr-87*	-	-
Kr-88	5.7E-1	Kr-88*	-	-
Xe-131m	2.3E+0	Xe-131m*	-	-
Xe-133m	4.7E+0	Xe-133m*	-	-
Xe-133	1.0E+3	Xe-133*	-	-
Xe-135m	5.9E-1	Xe-135m*	-	-
Xe-135	3.5E+1	Xe-135*	-	-
Xe-138	8.0E-1	Xe-138*	-	-
Ar-41	5.9E-2	Cs-137	1.00E+3	Crystal River
Mn-54	1.2E-4	Cs-137	2.07	Crystal River
Co-58	2.3E-6	Cs-137	0.04	Crystal River
Fe-59	3.4E-4	Cs-137	6.01	Crystal River
Co-60	7.6E-5	Cs-137	1.33	Crystal River
Zn-65	2.2E-4	Cs-137	3.92	Crystal River
Sr-89	1.5E-2	Cs-137	2.61E+2	Crystal River
Sr-90	2.7E-2	Cs-137	4.81E+2	Crystal River
Cs-137	5.7E-5	Cs-137*	1.00	Crystal River
Ba-140	2.3E-4	Cs-137	4.11	Turkey Point 3
La-140	1.2E-4	Cs-137	2.10	Turkey Point 3

*Geometric mean calculated from 1985 reported atmospheric radioactive emissions for U.S. pressurized water reactors.

4.5.2.2 Other Parameters Used in the Assessment

Sets of joint frequency data from on-site meteorological stations for a representative group of U.S. nuclear power plant sites were obtained and compared. The meteorological data for Limerick were used for the assessment.

A review of the population distribution in the vicinity of nuclear power plants reveals a wide variation in average population densities. The data for 91 plants show the population density varies between 19 to 2,099 persons per square mile (NRC82). Table 4-27 presents the minimum, maximum, and 90th percentile.

Table 4-27. Minimum, maximum, median, and 90th percentile population densities for nuclear power reactor sites in the United States.

Distance (miles)	Persons/Square Mile			
	Minimum	Maximum	Median	90%
0-5	0	790	40	190
5-10	2	700	80	260
10-20	0	730	90	380
20-30	2	2,000	110	490
30-50	0	2,500	110	660

Source: NRC82

Limerick, with a density of about 900 persons per square mile, was selected as the reference site. The population distribution used in the assessment was generated using the SECPOP code. To assess the potential risk to nearby individuals, doses and risks were evaluated at 750 m in the predominant wind direction.

Food fractions representative of a rural location were used in assessing both the model BWR and PWR. Details of the inputs to the assessment code are given in Appendix A.

4.5.3 Results of the Dose and Risk Assessment of Power Reactor Facilities

4.5.3.1 Results for Model Power Reactor Facilities

The estimated annual radiation dose and fatal cancer risks from the model BWR and PWR facilities are presented in Tables 4-28 and 4-29.

Table 4-28. Dose rates from model light water reactors.

Facility	Organ	Nearby Individuals (mrem/y)	Regional Population (person-rem/y)
Model BWR	Gonads	2.5E-1	4.9E+0
	Breast	2.4E-1	4.8E+0
	Red Bone Marrow	1.9E-1	3.7E+0
	Lungs	1.9E-1	3.8E+0
	Remainder	1.9E-1	3.7E+0
Model PWR	Red Bone Marrow	3.2E-1	6.0E+0
	Breast	1.1E-1	1.8E+0
	Gonads	9.5E-2	1.5E+0
	Endosteum	6.8E-1	1.3E+1
	Remainder	7.3E-2	1.2E+0

Table 4-29. Fatal cancer risks for model light water reactors.

Source	Nearby Individuals Lifetime Fatal Cancer Risk	Regional (0-80 km) Population Deaths/y
Model BWR	5E-6	1E-3
Model PWR	3E-6	7E-4

4.5.3.1.1 Doses and Risks to the Nearby Individuals

Estimates of the annual dose and fatal cancer risk to the nearby individuals due to atmospheric emissions of radionuclides from the model BWR are presented in Tables 4-28 and 4-29, respectively. The organ receiving the maximum dose is the thyroid, but this contributes less than 10 percent of the risk. All organ doses are predicted to be below 1 mrem/y. The predominant exposure pathway for the model BWR is air immersion.

Approximately 32 percent of the dose results from exposure to kryptons, 30 percent from exposure to xenons, and 10 percent from exposure to argon-41. The lifetime risk of fatal cancer due to the estimated radionuclide exposures from the model BWR is 5E-6.

Estimates of the annual dose and fatal cancer risk to nearby individuals due to atmospheric emissions from the model PWR are also summarized in Tables 4-28 and 4-29. The organs receiving the maximum dose are red bone marrow and the breast. All organ doses are below 1 mrem/y. The predominant exposure pathways are air immersion and inhalation. Xenon isotopes contribute 74 percent of the dose, and strontium-90 contributes 14 percent. The lifetime risk of fatal cancer due to the estimated radionuclide exposures from the model PWR is 3E-6.

4.5.3.1.2 Doses and Risks to the Regional Population

Estimates of the collective dose rate and fatal cancer risk to the regional population due to atmospheric releases of radionuclides from the model BWR are presented in Tables 4-28 and 4-29, respectively.

All organ doses are predicted to be below 6 person-rem/year. The most important population pathway for the model BWR is air immersion, with some contribution from exposure to ground surface. The most important nuclides are the xenons (39 percent) and the kryptons (32 percent). The incremental risk to the regional population is estimated to be 1E-3 fatal cancers per year of operation.

For the model PWR, the estimates of collective dose and fatal cancer risks to the regional population are also summarized in Tables 4-28 and 4-29. All organ doses are estimated to be less than 1 person-rem/year. Air immersion is the most important population pathway for the model PWR, with contributions from ingestion and inhalation. The most important nuclides are xenon-133 (64 percent) and strontium-90 (26 percent). The incremental risk to the regional population is 1E-4 fatal cancers per year of operation.

4.5.3.2 Projection of Fatal Cancers per Year and the Risk Distribution for the Power Reactor Segment of the Uranium Fuel Cycle

Based on the results of the calculations of the model BWR and PWR facilities, the total risk from all power reactors in the United States is estimated to be 9E-2 fatal cancers per year. This estimate is based on the assumption of 63 PWRs and 37 BWRs.

The estimated distribution of the lifetime fatal cancer risk projected for all power reactors is presented in Table 4-30.

The distribution does not account for overlap in the populations exposed to radionuclides released from more than a single reactor and may understate the risk to some individuals residing near multiple reactors.

Table 4-30. Estimated distribution of lifetime fatal cancer risks projected for all power reactors.

Risk Interval	Number of Persons	Deaths/y
1E-01 to 1E+00	0	0
1E-02 to 1E-01	0	0
1E-03 to 1E-02	0	0
1E-04 to 1E-03	0	0
1E-05 to 1E-04	0	0
1E-06 to 1E-05	*	*
< 1.0E-06	240,000,000	9E-2
Totals	240,000,000	9E-2

*The results of the assessments of the model facilities indicate that there might be persons in this risk interval, but without site-specific assessments, the EPA cannot quantify the number.

4.5.3.3 Doses Reported by Power Reactor Operators

Power reactor operators are required to calculate and report the estimated doses to the "maximally exposed individual" residing near the site. Table 4-31 presents the exposures reported by operators to the NRC in recent years. Since the operators do not use a consistent methodology in making their estimates, the last column of Table 4-31 provides an estimate of the doses in terms of the ICRP's effective dose equivalent. Five reactors have reported doses of 1 mrem/y or greater during the period examined (1984-1987). The highest estimated doses are below 5 mrem/y, consistent with the ALARA objectives of 10 CFR 50, Appendix I.

4.5.4 Supplementary Control Options and Costs

Emissions from the light-water reactor segment of the uranium fuel cycle do not result in doses or risks high enough to warrant a full evaluation of supplementary control options and costs. The well-proven control technologies such as additional decay tanks for noble gases and additional charcoal adsorbers for radioiodines can be employed. Costs for such systems can be developed only on a reactor-specific basis due to the unique designs of these facilities. A rough figure of $5 million per reactor can be estimated.

Table 4-31. Doses to maximally exposed individuals in mrem/y.

Facility	Docket	Year	Whole Body	Thyroid	Bone	Liver	Lung	Skin	GI-Tract	Kidney
VOGTLE 1	50-424	1987	2.8E+0	9.9E-3	5.0E-7	9.8E-3	9.9E-3	0.0E+0	9.8E-3	9.8E-3
		1988	1.8E+0	2.5E-3	0.0E+0	2.5E-3	2.5E-3	0.0E+0	2.5E-3	2.5E-3
OYSTER CREEK	50-219	1986	4.3E+0	8.1E-1	0.0E+0	0.0E+0	0.0E+0	4.5E+0	0.0E+0	0.0E+0
		1985	1.4E+0	8.8E+0	0.0E+0	0.0E+0	0.0E+0	1.5E+0	0.0E+0	0.0E+0
		1987	1.7E-1	1.7E-1	0.0E+0	0.0E+0	0.0E+0	1.7E-1	0.0E+0	0.0E+0
CATAWBA	50-413	1986	2.2E+0	0.0E+0	0.0E+0	0.0E+0	0.0E+0	0.0E+0	3.3E+0	0.0E+0
		1985	8.8E-1	0.0E+0	0.0E+0	0.0E+0	0.0E+0	0.0E+0	2.2E+0	0.0E+0
		1987	8.9E-1	6.7E-1	0.0E+0	0.0E+0	0.0E+0	2.5E+0	0.0E+0	0.0E+0
HADDAM NECK	50-213	1984	1.5E+0	2.8E-1	0.0E+0	0.0E+0	0.0E+0	0.0E+0	0.0E+0	0.0E+0
		1985	1.0E+0	1.4E-1	0.0E+0	0.0E+0	0.0E+0	0.0E+0	0.0E+0	0.0E+0
		1987	6.6E-1	7.3E-2	0.0E+0	0.0E+0	0.0E+0	0.0E+0	0.0E+0	0.0E+0
		1986	3.9E-1	8.7E-2	0.0E+0	0.0E+0	0.0E+0	0.0E+0	0.0E+0	0.0E+0
MCGUIRE 1	50-369	1985	1.8E+0	2.6E+0	0.0E+0	0.0E+0	0.0E+0	0.0E+0	0.0E+0	0.0E+0
		1986	1.5E-1	0.0E+0	0.0E+0	0.0E+0	0.0E+0	4.1E-1	0.0E+0	0.0E+0
		1987	0.0E+0	8.1E-2	0.0E+0	0.0E+0	0.0E+0	2.0E-1	0.0E+0	0.0E+0
WATERFORD	50-382	1987	6.6E-1	1.4E+0	5.6E-3	6.7E-1	6.6E-1	0.0E+0	6.6E-1	6.6E-1
		1986	0.0E+0	5.5E+0	0.0E+0	0.0E+0	0.0E+0	0.0E+0	0.0E+0	0.0E+0
		1985	0.0E+0	3.1E+0	0.0E+0	0.0E+0	0.0E+0	0.0E+0	0.0E+0	0.0E+0
COOPER	50-298	1985	5.7E-1	6.0E-1	6.4E-1	5.6E-1	5.6E-1	9.4E-1	5.5E-1	5.6E-1
		1986	4.0E-1	5.6E-1	4.3E-1	3.9E-1	3.9E-1	7.4E-1	3.9E-1	3.9E-1
		1987	1.8E-2	9.7E-2	2.9E-2	1.8E-2	1.8E-2	4.0E-2	1.9E-2	1.9E-2
LA CROSSE	50-409	1986	4.7E-1	0.0E+0	0.0E+0	0.0E+0	0.0E+0	0.0E+0	0.0E+0	0.0E+0
		1987	2.0E-1	0.0E+0	0.0E+0	0.0E+0	0.0E+0	0.0E+0	0.0E+0	0.0E+0

Table 4-31. Doses to maximally exposed individuals in mrem/y (continued).

Facility	Docket	Year	Whole Body	Thyroid	Bone	Liver	Lung	Skin	GI-Tract	Kidney
PALO VERDE	50-528	1987	3.8E-1	5.2E-1	2.5E-1	3.8E-1	3.8E-1	0.0E+0	3.8E-1	3.8E-1
		1988	2.1E-1	3.4E-1	1.6E-1	2.1E-1	2.1E-1	0.0E+0	2.1E-1	2.1E-1
		1985	1.6E-2	2.1E-2	1.6E-2	1.6E-2	1.6E-2	0.0E+0	1.6E-2	1.6E-2
PILGRIM	50-293	1985	4.9E-1	1.8E-1	6.0E-2	4.9E-2	4.8E-2	8.3E-2	4.9E-2	5.0E-2
		1986	2.7E-2	6.4E-2	7.2E-2	2.8E-2	3.2E-2	3.4E-2	2.8E-2	2.9E-2
RANCHO SECO	50-312	1985	1.7E-1	1.7E-1	1.7E-1	1.7E-1	1.7E-1	4.6E-1	1.7E-1	1.7E-1
GRAND GULF	50-416	1987	3.4E-1	9.4E-1	0.0E+0	0.0E+0	0.0E+0	1.1E+0	0.0E+0	0.0E+0
		1985	9.0E-2	0.0E+0	0.0E+0	0.0E+0	0.0E+0	0.0E+0	0.0E+0	0.0E+0
		1986	6.8E-2	0.0E+0	0.0E+0	0.0E+0	0.0E+0	0.0E+0	0.0E+0	0.0E+0
YANKEE-ROWE	50-29	1987	0.0E+0	0.0E+0	2.0E+0	0.0E+0	0.0E+0	0.0E+0	0.0E+0	0.0E+0
		1984	0.0E+0	3.0E-2	7.2E-1	0.0E+0	0.0E+0	0.0E+0	0.0E+0	0.0E+0
CRYSTAL RIVER	50-302	1986	2.1E-1	3.8E-3	0.0E+0	0.0E+0	0.0E+0	5.5E-1	0.0E+0	0.0E+0
		1987	2.0E-1	2.7E-2	0.0E+0	0.0E+0	0.0E+0	5.8E-1	0.0E+0	0.0E+0
		1985	2.2E-2	3.1E-1	0.0E+0	0.0E+0	0.0E+0	0.0E+0	0.0E+0	0.0E+0
RIVER BEND	50-458	1985	2.0E-1	0.0E+0	0.0E+0	0.0E+0	0.0E+0	3.9E-1	0.0E+0	0.0E+0
		1986	1.7E-1	0.0E+0	0.0E+0	0.0E+0	0.0E+0	3.2E-1	0.0E+0	0.0E+0
		1987	3.9E-2	0.0E+0	0.0E+0	0.0E+0	0.0E+0	0.0E+0	3.9E-1	0.0E+0
OCONEE	50 287	1985	1.5E-1	0.0E+0	0.0E+0	0.0E+0	0.0E+0	9.1E-1	0.0E+0	0.0E+0
		1986	8.7E-2	9.7E-1	0.0E+0	0.0E+0	0.0E+0	2.5E-1	0.0E+0	0.0E+0
PEACH BOTTOM	50-278	1986	1.2E-1	7.0E-1	0.0E+0	0.0E+0	0.0E+0	2.2E-1	7.7E-1	0.0E+0
		1985	4.1E-2	1.2E+0	0.0E+0	0.0E+0	0.0E+0	2.1E-1	1.2E+0	0.0E+0
		1987	1.5E-2	1.3E-1	0.0E+0	0.0E+0	0.0E+0	4.3E-2	1.4E-1	0.0E+0

Table 4-31. Doses to maximally exposed individuals in mrem/y (continued).

Facility	Docket	Year	Whole Body	Thyroid	Bone	Liver	Lung	Skin	GI-Tract	Kidney
ST.LUCIE 1	50-335	1986	1.1E-2	5.8E+0	1.5E-2	1.9E-2	5.0E-4	0.0E+0	1.3E-3	4.8E-3
		1985	1.3E-2	4.2E+0	1.1E-2	1.8E-2	4.0E-3	0.0E+0	4.5E-3	5.0E-3
		1987	2.3E-3	7.6E-1	2.0E-3	3.2E-3	8.6E-4	0.0E+0	9.6E-4	9.7E-4
KEWAUNEE	50-305	1986	1.2E-1	1.3E-2	0.0E+0	0.0E+0	0.0E+0	1.4E-1	0.0E+0	0.0E+0
FARLEY	50-348	1985	1.3E-1	1.8E-1	0.0E+0	0.0E+0	0.0E+0	3.0E-1	0.0E+0	0.0E+0
		1986	1.2E-1	9.0E-2	0.0E+0	0.0E+0	0.0E+0	2.7E-1	0.0E+0	0.0E+0
		1987	8.1E-2	5.4E-2	0.0E+0	0.0E+0	0.0E+0	3.3E-1	0.0E+0	0.0E+0
MILLSTONE 1	50-245	1986	2.2E-1	7.0E-4	0.0E+0	0.0E+0	0.0E+0	0.0E+0	0.0E+0	0.0E+0
		1987	8.3E-2	1.5E-3	0.0E+0	0.0E+0	0.0E+0	0.0E+0	0.0E+0	0.0E+0
		1985	7.0E-3	7.0E-4	0.0E+0	0.0E+0	0.0E+0	0.0E+0	0.0E+0	0.0E+0
WOLF CREEK	50-482	1988	8.2E-2	0.0E+0	0.0E+0	0.0E+0	0.0E+0	0.0E+0	0.0E+0	0.0E+0
		1987	6.5E-2	0.0E+0	0.0E+0	0.0E+0	0.0E+0	0.0E+0	0.0E+0	0.0E+0
TROJAN	50-344	1985	6.9E-2	0.0E+0	0.0E+0	0.0E+0	0.0E+0	1.7E-1	0.0E+0	0.0E+0
COOK	50-315	1985	5.7E-2	1.9E+0	0.0E+0	0.0E+0	0.0E+0	1.8E-1	0.0E+0	0.0E+0
		1987	2.4E-2	1.3E+0	0.0E+0	0.0E+0	0.0E+0	1.5E-1	0.0E+0	0.0E+0
		1986	2.0E-2	2.7E-1	0.0E+0	0.0E+0	0.0E+0	5.6E-2	0.0E+0	0.0E+0
FT ST VRAIN	50-267	1987	1.9E-1	0.0E+0	0.0E+0	0.0E+0	0.0E+0	0.0E+0	0.0E+0	0.0E+0
		1986	4.3E-3	0.0E+0	0.0E+0	0.0E+0	0.0E+0	0.0E+0	0.0E+0	0.0E+0
		1985	7.3E-5	0.0E+0	0.0E+0	0.0E+0	0.0E+0	0.0E+0	0.0E+0	0.0E+0
SEQUOYAH	50-327	1985	1.9E-1	5.4E-2	0.0E+0	0.0E+0	0.0E+0	4.4E-1	0.0E+0	0.0E+0
		1986	2.0E-3	0.0E+0	0.0E+0	0.0E+0	0.0E+0	2.0E-3	2.4E-2	0.0E+0
		1987	0.0E+0	0.0E+0	0.0E+0	0.0E+0	0.0E+0	0.0E+0	2.8E-2	0.0E+0

Table 4-31. Doses to maximally exposed individuals in mrem/y (continued).

Facility	Docket	Year	Whole Body	Thyroid	Bone	Liver	Lung	Skin	GI-Tract	Kidney
HB ROBINSON	50-261	1987	6.8E-2	1.1E-1	6.5E-2	6.8E-2	7.0E-2	1.8E-1	6.8E-2	6.8E-2
		1986	1.6E-2	3.5E-1	5.4E-3	1.8E-2	1.5E-2	1.5E-2	1.5E-2	1.7E-2
HATCH	50-321	1987	1.3E-1	2.6E-1	1.1E-1	1.8E-1	2.0E-2	0.0E+0	6.2E-2	8.1E-3
		1986	4.0E-3	2.9E-1	4.0E-3	7.7E-3	1.9E-3	0.0E+0	4.9E-3	5.1E-3
		1985	6.5E-4	9.3E-2	6.7E-4	7.9E-4	5.1E-4	0.0E+0	2.2E-3	5.2E-4
SUSQUEHANNA	50-388	1985	1.4E-1	1.0E-1	0.0E+0	0.0E+0	0.0E+0	0.0E+0	0.0E+0	0.0E+0
		1987	1.1E-2	0.0E+0	0.0E+0	9.8E-2	0.0E+0	0.0E+0	0.0E+0	0.0E+0
		1986	6.9E-3	0.0E+0	0.0E+0	0.0E+0	7.3E-3	2.0E-2	0.0E+0	0.0E+0
MONTICELLO	50-263	1987	0.0E+0	2.6E+0	0.0E+0	0.0E+0	0.0E+0	0.0E+0	0.0E+0	0.0E+0
		1985	0.0E+0	1.3E+0	0.0E+0	0.0E+0	0.0E+0	0.0E+0	0.0E+0	0.0E+0
		1986	0.0E+0	1.2E+0	0.0E+0	0.0E+0	0.0E+0	0.0E+0	0.0E+0	0.0E+0
DRESDEN	50-249	1984	2.0E-2	9.7E-1	0.0E+0	0.0E+0	0.0E+0	4.0E-2	0.0E+0	0.0E+0
ST.LUCIE 2	50-389	1985	6.2E-3	2.4E+0	3.2E-3	9.2E-3	1.6E-3	0.0E+0	1.9E-3	2.6E-3
		1987	2.8E-3	1.1E+0	2.7E-3	4.0E-3	7.7E-4	0.0E+0	9.0E-4	1.2E-3
		1986	2.1E-3	8.9E-1	2.4E-3	3.3E-3	5.0E-4	0.0E+0	6.0E-4	9.1E-4
ZION	50-295	1984	9.2E-2	2.9E-2	0.0E+0	0.0E+0	0.0E+0	4.7E-1	0.0E+0	0.0E+0
		1985	4.4E-2	7.8E-3	0.0E+0	0.0E+0	0.0E+0	4.1E-1	0.0E+0	0.0E+0
		1987	4.7E-4	0.0E+0	0.0E+0	0.0E+0	1.6E-2	4.4E-3	0.0E+0	0.0E+0
BRUNSWICK	50-324	1987	2.8E-2	9.3E-2	3.3E-2	2.8E-2	2.8E-2	6.5E-2	2.8E-2	2.8E-2
WASHINGTON	50-397	1985	4.2E-2	0.0E+0	0.0E+0	0.0E+0	0.0E+0	0.0E+0	0.0E+0	0.0E+0
		1986	4.1E-2	0.0E+0	0.0E+0	0.0E+0	0.0E+0	0.0E+0	0.0E+0	0.0E+0
TURKEY POINT 3	50-250	1986	4.2E-3	2.5E-2	1.9E-3	5.8E-3	3.8E-1	2.0E-4	3.6E-3	2.7E-3
		1987	8.7E-3	2.0E-1	1.2E-3	9.7E-3	8.4E-3	8.6E-5	8.3E-3	6.8E-3

Table 4-31. Doses to maximally exposed individuals in mrem/y (continued).

Facility	Docket	Year	Whole Body	Thyroid	Bone	Liver	Lung	Skin	GI-Tract	Kidney
HARRIS	50-400	1987	2.2E-2	2.2E-2	2.2E-2	2.2E-2	2.2E-2	5.0E-2	2.2E-2	2.2E-2
SALEM	50-311	1987	4.7E-2	0.0E+0	0.0E+0	0.0E+0	0.0E+0	1.1E-1	0.0E+0	0.0E+0
		1986	2.8E-2	0.0E+0	0.0E+0	0.0E+0	0.0E+0	6.4E-2	0.0E+0	0.0E+0
		1985	1.6E-2	0.0E+0	0.0E+0	0.0E+0	0.0E+0	3.5E-2	0.0E+0	0.0E+0
NMPNS	50-220	1987	2.4E-2	7.3E-1	0.0E+0	0.0E+0	0.0E+0	0.0E+0	0.0E+0	0.0E+0
		1986	1.3E-2	4.8E-1	0.0E+0	0.0E+0	0.0E+0	0.0E+0	0.0E+0	0.0E+0
		1985	2.5E-4	9.8E-3	0.0E+0	0.0E+0	0.0E+0	0.0E+0	0.0E+0	0.0E+0
NORTH ANNA	50-338	1985	0.0E+0	1.3E+0	0.0E+0	0.0E+0	0.0E+0	0.0E+0	0.0E+0	0.0E+0
		1986	0.0E+0	8.0E-1	0.0E+0	0.0E+0	0.0E+0	0.0E+0	0.0E+0	0.0E+0
		1987	0.0E+0	4.4E-1	0.0E+0	0.0E+0	0.0E+0	0.0E+0	0.0E+0	0.0E+0
BROWNS FERRY	50-296	1985	6.0E-2	0.0E+0	3.7E-2	0.0E+0	0.0E+0	1.0E-1	0.0E+0	0.0E+0
		1986	0.0E+0	0.0E+0	1.0E-2	0.0E+0	0.0E+0	0.0E+0	0.0E+0	0.0E+0
		1987	0.0E+0	0.0E+0	0.0E+0	0.0E+0	0.0E+0	0.0E+0	7.6E-3	0.0E+0
CALLAWAY	50-483	1986	3.4E-2	0.0E+0	0.0E+0	0.0E+0	0.0E+0	0.0E+0	0.0E+0	0.0E+0
		1987	1.6E-2	0.0E+0	0.0E+0	0.0E+0	0.0E+0	0.0E+0	0.0E+0	0.0E+0
		1985	6.9E-3	0.0E+0	0.0E+0	0.0E+0	0.0E+0	0.0E+0	0.0E+0	0.0E+0
PRAIRIE ISLAND	50-282	1985	0.0E+0	0.0E+0	0.0E+0	0.0E+0	0.0E+0	0.0E+0	5.6E-1	0.0E+0
		1987	0.0E+0	0.0E+0	0.0E+0	0.0E+0	0.0E+0	0.0E+0	6.6E-2	0.0E+0
ARKANSAS 1	50-313	1986	6.0E-3	8.3E-1	4.5E-3	7.5E-3	4.3E-3	0.0E+0	4.5E-3	8.7E-3
		1987	4.4E-3	5.4E-3	7.1E-4	4.8E-4	4.3E-3	0.0E+0	4.3E-3	4.6E-3
BEAVER VALLEY	50-334	1986	2.3E-2	9.2E-2	7.1E-3	2.4E-2	2.5E-2	0.0E+0	2.3E-2	2.3E-2
		1987	1.4E-3	1.7E-3	3.5E-6	1.4E-3	1.4E-3	0.0E+0	1.4E-3	1.4E-3

Table 4-31. Doses to maximally exposed individuals in mrem/y (continued).

Facility	Docket	Year	Whole Body	Thyroid	Bone	Liver	Lung	Skin	GI-Tract	Kidney
LIMERICK	50-352	1987	2.2E-4	0.0E+0	2.1E-1	0.0E+0	0.0E+0	5.7E-4	0.0E+0	0.0E+0
		1986	7.9E-4	0.0E+0	4.5E-2	0.0E+0	0.0E+0	1.5E-3	0.0E+0	0.0E+0
QUAD CITIES 1	50-254	1985	2.0E-2	1.6E-1	0.0E+0	0.0E+0	0.0E+0	4.6E-2	0.0E+0	0.0E+0
		1987	2.5E-3	1.2E-1	0.0E+0	0.0E+0	0.0E+0	8.8E-3	0.0E+0	0.0E+0
QUAD CITIES 2	50-265	1985	2.0E-2	1.3E-1	0.0E+0	0.0E+0	0.0E+0	4.3E-2	0.0E+0	0.0E+0
		1987	2.1E-3	9.9E-2	0.0E+0	0.0E+0	0.0E+0	4.5E-3	0.0E+0	0.0E+0
MILLSTONE 2	50-336	1985	1.5E-2	3.8E-2	0.0E+0	0.0E+0	0.0E+0	0.0E+0	0.0E+0	0.0E+0
		1987	1.3E-2	4.0E-2	0.0E+0	0.0E+0	0.0E+0	0.0E+0	0.0E+0	0.0E+0
		1986	1.0E-2	4.3E-2	0.0E+0	0.0E+0	0.0E+0	0.0E+0	0.0E+0	0.0E+0
CALVERT	50-317	1987	0.0E+0	4.4E-1	0.0E+0	0.0E+0	0.0E+0	0.0E+0	0.0E+0	0.0E+0
TURKEY POINT 4	50-251	1987	8.8E-3	2.2E-1	1.3E-3	9.8E-3	8.3E-3	1.2E-4	8.3E-3	6.8E-3
		1986	3.8E-3	3.2E-2	1.3E-3	5.1E-3	3.8E-3	1.9E-4	3.6E-3	2.5E-3
3 MILE ISLAND	50-289	1986	1.9E-2	0.0E+0	0.0E+0	0.0E+0	0.0E+0	4.6E-2	0.0E+0	0.0E+0
		1987	2.8E-3	0.0E+0	0.0E+0	0.0E+0	0.0E+0	8.0E-3	0.0E+0	0.0E+0
MILLSTONE 3	50-423	1987	1.7E-2	1.4E-2	0.0E+0	0.0E+0	0.0E+0	0.0E+0	0.0E+0	0.0E+0
		1986	5.2E-4	1.0E-1	0.0E+0	0.0E+0	0.0E+0	7.1E-4	0.0E+0	0.0E+0
PALISADES	50-255	1987	0.0E+0	0.0E+0	2.0E-1	0.0E+0	0.0E+0	0.0E+0	0.0E+0	0.0E+0
		1985	0.0E+0	1.0E-1	0.0E+0	0.0E+0	0.0E+0	0.0E+0	0.0E+0	0.0E+0
		1986	0.0E+0	7.3E-3	0.0E+0	0.0E+0	0.0E+0	0.0E+0	0.0E+0	0.0E+0
YANKEE-ROWE	50-29	1985	0.0E+0	0.0E+0	6.9E-2	0.0E+0	0.0E+0	0.0E+0	0.0E+0	0.0E+0
MCGUIRE 2	50-370	1987	3.6E-3	0.0E+0	0.0E+0	0.0E+0	0.0E+0	1.0E+0	0.0E+0	0.0E+0
		1986	0.0E+0	4.3E-1	0.0E+0	0.0E+0	0.0E+0	0.0E+0	0.0E+0	0.0E+0

Table 4-31. Doses to maximally exposed individuals in mrem/y (continued).

Facility	Docket	Year	Whole Body	Thyroid	Bone	Liver	Lung	Skin	GI-Tract	Kidney
DAVIS-BESSE	50-346	1987	1.2E-2	4.0E-2	0.0E+0	0.0E+0	0.0E+0	3.0E-2	0.0E+0	0.0E+0
		1985	8.1E-3	5.6E-2	0.0E+0	0.0E+0	0.0E+0	2.9E-3	0.0E+0	0.0E+0
		1986	6.4E-4	6.4E-4	0.0E+0	0.0E+0	0.0E+0	0.0E+0	0.0E+0	0.0E+0
VERMONT YANKEE	50-271	1987	0.0E+0	4.2E-1	0.0E+0	0.0E+0	0.0E+0	0.0E+0	0.0E+0	0.0E+0
		1985	0.0E+0	0.0E+0	0.0E+0	0.0E+0	2.4E-3	0.0E+0	0.0E+0	0.0E+0
SAN ONOFRE	50-361	1985	0.0E+0	4.1E-1	0.0E+0	0.0E+0	0.0E+0	0.0E+0	0.0E+0	0.0E+0
		1986	0.0E+0	1.4E-1	0.0E+0	0.0E+0	0.0E+0	0.0E+0	0.0E+0	0.0E+0
		1987	0.0E+0	4.9E-2	0.0E+0	0.0E+0	0.0E+0	0.0E+0	0.0E+0	0.0E+0
SURRY	50-281	1987	0.0E+0	3.6E-1	0.0E+0	0.0E+0	0.0E+0	0.0E+0	0.0E+0	0.0E+0
		1986	0.0E+0	3.5E-2	0.0E+0	0.0E+0	0.0E+0	0.0E+0	0.0E+0	0.0E+0
ARKANSAS 2	50-368	1986	1.7E-3	3.6E-2	9.2E-4	2.3E-3	1.6E-3	0.0E+0	1.6E-3	2.0E-3
		1987	2.3E-3	7.0E-3	1.8E-4	2.9E-3	2.8E-3	0.0E+0	2.8E-3	2.9E-3
INDIAN PT	50-286	1986	4.9E-4	6.2E-2	2.0E-4	6.0E-4	4.1E-4	0.0E+0	4.2E-4	6.3E-4
		1985	7.8E-4	2.9E-2	4.9E-4	8.5E-4	7.5E-4	0.0E+0	7.5E-4	8.3E-4
BYRON 1	50-454	1985	1.5E-3	2.2E-2	0.0E+0	0.0E+0	0.0E+0	0.0E+0	0.0E+0	0.0E+0
		1987	3.1E-4	3.1E-2	0.0E+0	0.0E+0	0.0E+0	0.0E+0	0.0E+0	0.0E+0
KEWAUNEE	50-305	1987	8.1E-5	2.2E-2	0.0E+0	0.0E+0	0.0E+0	2.9E-3	0.0E+0	0.0E+0
SAN ONOFRE 1	50-206	1985	0.0E+0	1.6E-2	0.0E+0	0.0E+0	0.0E+0	0.0E+0	0.0E+0	0.0E+0
		1987	0.0E+0	1.4E-2	0.0E+0	0.0E+0	0.0E+0	0.0E+0	0.0E+0	0.0E+0
CLINTON	50-461	1988	2.1E-4	2.6E-4	6.4E-5	2.1E-4	2.3E-4	0.0E+0	2.1E-4	2.1E-4
			2.1E-5	8.1E-3	3.0E-5	3.5E-5	1.0E-5	0.0E+0	1.1E-5	3.9E-5

Table 4-31. Doses to maximally exposed individuals in mrem/y (continued).

Facility	Docket	Year	Whole Body	Thyroid	Bone	Liver	Lung	Skin	GI-Tract	Kidney
VIRGIL SUMMER	50-395	1986	5.1E-4	0.0E+0	0.0E+0	0.0E+0	0.0E+0	0.0E+0	0.0E+0	0.0E+0
		1984	1.5E-4	0.0E+0	0.0E+0	0.0E+0	0.0E+0	0.0E+0	0.0E+0	0.0E+0
		1987	1.1E-6	0.0E+0	0.0E+0	0.0E+0	0.0E+0	0.0E+0	0.0E+0	0.0E+0
DIABLO CANYON 1	50-275	1987	0.0E+0	4.7E-3	0.0E+0	0.0E+0	0.0E+0	0.0E+0	0.0E+0	0.0E+0
		1986	0.0E+0	3.5E-3	0.0E+0	0.0E+0	0.0E+0	0.0E+0	0.0E+0	0.0E+0
		1985	0.0E+0	1.4E-3	0.0E+0	0.0E+0	0.0E+0	0.0E+0	0.0E+0	0.0E+0
DIABLO CANYON 2	50-323	1986	0.0E+0	4.3E-3	0.0E+0	0.0E+0	0.0E+0	0.0E+0	0.0E+0	0.0E+0
		1987	0.0E+0	2.9E-3	0.0E+0	0.0E+0	0.0E+0	0.0E+0	0.0E+0	0.0E+0
		1985	0.0E+0	4.1E-5	0.0E+0	0.0E+0	0.0E+0	0.0E+0	0.0E+0	0.0E+0

4.6 SUMMARY

Estimates of dose rates and fatal cancer risks resulting from atmospheric emissions of radionuclides from the uranium fuel cycle facilities evaluated in this study are summarized in Table 4-32.

Table 4-32. Summary of fatal cancer risks from atmospheric radioactive emissions from uranium fuel cycle facilities.

Facility	Highest Individual Lifetime Fatal Cancer Risk	Regional (0-80 km) Population Deaths/y
Uranium Mills		
Ambrosia Lake	2E-7	3E-5
Homestake	2E-4	2E-3
La Sal	2E-6	3E-5
Lucky Mc	1E-7	7E-6
Panna Maria	3E-6	5E-5
Sherwood	1E-6	8E-5
Shirley Basin	6E-7	9E-5
Shootaring	2E-7	7E-7
Sweetwater	7E-7	2E-5
White Mesa	6E-7	2E-5
Model Inactive Tailings	2E-4	1E-4
Uranium Conversion		
Dry	3E-5	8E-4
Wet	4E-5	6E-4
Fuel Fabrication	4E-6	8E-5
Nuclear Power Reactors		
Pressurized Water Reactors	3E-6	7E-4
Boiling Water Reactors	5E-6	1E-3

Where actual facilities are assessed, estimates for nearby individuals and for regional populations reflect the actual demography of the site. Where model facilities were used, the estimates for nearby individuals were made at 500 meters in the predominant wind direction, and the estimates for the regional population were made using a reference site. The estimates of organ dose equivalent rates to the nearby individuals for all facilities are below 75 mrem/y, except for the Homestake uranium mill and the model inactive tailings which have an estimated lung dose equivalent of 87 mrem/y and 98 mrem/y, respectively. The

doses for the Homestake mill will be lower when the new effluent control system for the yellowcake processing area is installed (Fa88).

A summary of the estimated distribution of lifetime fatal cancer risks from uranium fuel cycle facilities is presented in Table 4-33. The cumulative risk estimates have been computed by aggregating the estimated distributions, constrained to the U.S. population, for each of the individual fuel cycle facilities. The total number of incremental cancer deaths per year attributed to uranium fuel cycle facilities is estimated to be 9E-2. The total number of people estimated to incur an incremental risk of 1.0E-3 to 1.0E-4 from these facilities is 84, while 6,600 people are predicted to incur an incremental risk of 1.0E-4 to 1.0E-5, 42,000 people are predicted to incur an incremental risk of 1.0E-5 to 1.0E-6, and 240,000,000 people are predicted to incur an incremental risk of less than 1.0E-6.

Table 4-33. Estimated distribution of lifetime fatal cancer risks for uranium fuel cycle facilities.*

Risk	Number of Persons	Deaths/y
1E-01 to 1E+00	0	0
1E-02 to 1E-01	0	0
1E-03 to 1E-02	0	0
1E-04 to 1E-03	84	2E-4
1E-05 to 1E-04	6,600	1E-3
1E-06 to 1E-05	42,000	2E-3
< 1.0E-06	240,000,000	9E-2
Totals	240,000,000	9E-2

*Computed as the aggregate of the estimated distributions for each of the individual fuel cycle segments multiplied by the number of facilities of that type. The number of facilities of each type is as follows:

Uranium Mills	- Active	4
	- Standby	7
	- Inactive	15
Uranium Conversion	- Dry	1
	- Wet	1
Fuel Fabrication		5
Pressurized Water Reactors		63
Boiling Water Reactors		37

4.7 REFERENCES

AEC73 U.S. Atomic Energy Commission, "Proposed Rule Making Action: Numerical Guides for Design Objectives and Limiting Conditions for Operation to meet the Criterion `As Low As Practicable' for Radioactive Material in Light-Water-Cooled Nuclear Power Reactor Effluents," WASH-1258, July 1973.

AEC74 U.S. Atomic Energy Commission, Fuels and Materials Directorate of Licensing, "Environmental Survey of the Uranium Fuel Cycle," April 1984.

Co74 Cooke, N. and Holt, F.B., "The Solubility of Some Uranium Compounds in Simulated Lung Fluid," Health Physics, Vol. 27, No. 1, 1974.

De79 Dennis, N.A., "Dissolution Rates of Yellowcake in Simulated Lung Fluids," Master's Thesis, University of Pittsburgh, Department of Radiation Health, 1979.

De82 Dennis, N.A. and Blauer, H.M., "Dissolution Fractions and Half-Times of Single Source Yellowcake in Simulated Lung Fluids," Health Physics, Vol. 42, No. 4, April 1982.

Do88 Dolezal, W., formerly of Kerr-McGee Nuclear Corporation, Sequoyah, Oklahoma, personal communication with D. Goldin, SC&A, Inc., September 1988.

DOE87 U.S. Department of Energy, Energy Information Administration, Commercial Nuclear Power 1987, Prospects for the United States and the World, DOE/EIA-0438(87), July 1987.

EPA79 U.S. Environmental Protection Agency, "Radiological Impact Caused by Emissions of Radionuclides into Air in the United States (Preliminary Report)," EPA 520/7-79-006, August 1979.

EPA84a U.S. Environmental Protection Agency, Radionuclides: Background Information Document for Final Rules (Vol. I), EPA 520/1-84-022-1, October 1984.

EPA84b U.S. Environmental Protection Agency, Radionuclides: Background Information Document for Final Rules (Vol. II), EPA 520/1-84-022-2, October 1984.

EPA86 U.S. Environmental Protection Agency, Final Rule for Radon-222 Emissions from Licensed Uranium Mill Tailings, Background Information Document, EPA 520/1-8-009, August 1986.

Fa88 Farrel, R., Radiation Safety Officer, Homestake Mills, personal communication with SC&A, Inc. personnel, December 1988.

Ha83 Hannery, K., Towards Intrinsically Safe Light Water Reactors, Oak Ridge Associated Universities Report, ORAU/IEA-83-2(M), 1983.

ICRP66 "Deposition and Retention Models for Internal Dosimetry of the Human Respiratory Tract," Task Group on Lung Dynamics, Health Physics, Vol. 12, 1966.

Jo81 Jones, J.Q., "Uranium Production," Uranium Industry Seminar Proceedings, October 21-22, 1981, Grand Junction, Colorado, Department of Energy, GAO-108(81), 1981.

Ka80 Kallkwarf, D.R., "Solubility Classification of Airborne Uranium Products Collected at the Parameter of the Allied Chemical Plant, Metropolis, Illinois," NUREG/CR-1316, U.S. Nuclear Regulatory Commission, Washington, D.C., 1980.

Mo84 Moore, E.B., "Control Technology for Radioactive Emissions to the Atmosphere at U.S. Department of Energy Facilities," PNL-4621 Final, Pacific Northwest Laboratory, Richland, Washington, October 1984.

NRC74 U.S. Nuclear Regulatory Commission, Environmental Statement Related to Operation of Shirley Basin Uranium Mill, December 1974

NRC79 U.S. Nuclear Regulatory Commission, "Generic Environmental Impact Statement on Uranium Milling" (Draft), Vol.II, NUREG-0511, April 1979.

NRC80 U.S. Nuclear Regulatory Commission, Final Generic Environmental Impact Statement on Uranium Milling, September 1980.

NRC82 U.S. Nuclear Regulatory Commission, Technical Guidance for Siting Criteria Development, NUREG/CR-2239, November 1982.

NRC84 U.S. Nuclear Regulatory Commission, "Environmental Impact Appraisal for the Renewal of Source Material License No. SUB-526," NUREG-1071, May 1984.

NRC85a U.S. Nuclear Regulatory Commission, "Environmental Assessment for Renewal of Special Nuclear Material License No. SNM-1107," NUREG-1118, May 1985.

NRC85b U.S. Nuclear Regulatory Commission, "Environmental Assessment for Renewal of Source Material License No. SUB-1010," NUREG-1157, August 1985.

PNL84 Pacific Northwest Laboratory, "Estimated Population Near Uranium Tailings," PNL-4959, WC-70, Richland, WA, January 1984.

Ri81 Rives, F.B. and Taormina, "Worldwide U_3O_8 Producer Profiles," Nuclear Assurance Corporation, Grand Junction, Colorado, 1981.

TEK81 Teknekron Research, Inc., "Technical Support for the Evaluation and Control of Radioactive Materials to Ambient Air," prepared for the U.S. Environmental Protection Agency, Office of Radiation Programs, Washington, D.C., May 1981.

5. HIGH-LEVEL WASTE DISPOSAL FACILITIES

The Nuclear Waste Policy Act of 1982 (the Act) provides that spent nuclear fuel and transuranic high-level radioactive wastes be disposed of in deep geologic repositories (NWP83). The term "high-level wastes" is used throughout this chapter to include all the materials covered by the Act. High-level waste repositories, whether for civilian or defense waste, will be operated by the Department of Energy (DOE) and licensed by the Nuclear Regulatory Commission (NRC). The Act also directed the Secretary of Energy to investigate the need for, and the feasibility of, monitored retrievable storage for high-level wastes. DOE is also developing a repository for disposal of radioactive waste from national defense programs.

The High-Level Waste Disposal Facility source category includes facilities designed to handle the interim or ultimate disposal of high-level radioactive wastes, as defined by 40 CFR 191. No such facility is in operation in the United States. Therefore, this assessment evaluates the risks from the two currently planned facilities. These are the Waste Isolation Pilot Plant (currently under construction in Carlsbad, New Mexico) and a geologic repository at Yucca Mountain, Nevada. Both facilities are subject to the standards established by 40 CFR 191.

A monitored retrievable storage (MRS) facility, which would be subject to the standards established by 40 CRF 191, is also being planned. However, the MRS facility has not been included in this assessment since the facility is not to be used as a final disposal site.

5.1 DESCRIPTION OF THE HIGH-LEVEL WASTE DISPOSAL FACILITIES

5.1.1 General Description

High-level wastes comprise those materials that the Environmental Protection Agency (EPA) has regulated under 40 CFR 191. These include:

1. used nuclear fuel when there is no intent to reprocess;

2. liquid wastes resulting from the operation of the first solvent extraction cycle (or equivalent) in a facility for reprocessing spent nuclear fuel, the concentrated wastes from subsequent extraction cycles (or equivalent), and solids into which such liquids have been converted; and

3. wastes containing more than 100 nanocuries per gram of transuranic elements with half-lives greater than 20 years.

In 1978, the NRC gave projected values for production of spent fuel at light-water power reactors (NRC78). These values are given in Table 5-1.

Table 5-1. Projected generation of spent fuel.

Year	MTHM(cum) [a]
1980	7,200
1985	18,000
1990	33,000
1995	59,000
2000	95,000

(a) MTHM = metric tons of heavy metal

Source: NRC78

The projected amount of high-level and waste to be disposed of by placement in a geologic repository shortly after the turn of the century is about 70,000 metric tons of uranium (MTU), or equivalent. Of this, about 62,000 MTU would be spent fuel from civilian reactors, and 8,000 MTU-equivalents would be defense waste (including waste from West Valley, New York). The difference between the 95,000 MTU of spent fuel shown in Table 5-1 and 62,000 MTU to be placed in the repository would be accounted for by at-reactor storage and interim storage not at the reactor (DOE85).

This chapter is limited to evaluation of the air emissions from facilities specifically used for handling, storage, and final disposal of high-level wastes. Emissions from such materials at reactors or at DOE facilities, such as Hanford, the Savannah River Plant, or the Idaho National Engineering Laboratory (INEL), are included in the assessments of Uranium Fuel Cycle Facilities and DOE Facilities (see Chapters 4 and 2, respectively).

5.1.2 Facility and Process Descriptions

The following subsections describe the operations that result in the release of radioactive materials to the atmosphere at each of the two facilities.

5.1.2.1 The Waste Isolation Pilot Plant

The Waste Isolation Pilot Plant (WIPP) is for the disposal of defense radioactive waste, primarily transuranic wastes, in a mined geologic repository in salt. Transuranic wastes are

designated as contact-handling (CH) and remote-handling (RH). At the facility, packaged waste containers are inspected, decontaminated, and prepared for underground disposal (DOE86a).

Most operations at WIPP are done in the waste-handling (w-h) building, which has separate areas for the receipt, inventory, inspection, and transfer of CH and RH transuranic (TRU) wastes. Air exhausted to the atmosphere from this building is filtered through HEPA filters.

Contact-handling TRU waste shipping containers on rail cars and trucks will enter the w-h building through airlocks. After inspection for contamination, acceptable packages will be moved to the CH-waste inventory and preparation room and transported underground. Contaminated or damaged containers will be decontaminated, overpacked or repaired, and sent to the inventory and preparation room to be transported underground.

Remote-handling TRU waste shielded shipping casks on rail cars and trucks will be unloaded, inspected, and decontaminated if necessary. Each cask will then be moved to the cask preparation and decontamination area for necessary treatment and then to the cask unloading room. The RH-waste canisters will be unloaded from the casks into the hot cell. Any contaminated or damaged canister will be inserted into an overpack. The canisters will be moved from the hot cell into a facility transfer cask for transfer to the underground disposal area.

Both packaged CH- and RH-wastes are emplaced in holes in the bedded-salt underground mine matrix. Disposal area ventilation air is routed through the disposal exhaust shaft to the disposal exhaust filtration building. This exhaust is not filtered except when monitors indicate radioactive material releases. Then, air flow volumes are approximately halved and diverted through HEPA filters.

5.1.2.2 Yucca Mountain Geologic Repository

The function of a repository is the permanent isolation of high-level radioactive waste. The Yucca Mountain site will contain a mined repository for the geologic disposal of spent fuel and processed defense high-level waste in accordance with the provisions of the Nuclear Waste Policy Act of 1982. The Act provides a limit of the equivalent of 70,000 MTU for this first repository.

Both unconsolidated and consolidated spent fuel will be handled at the repository. Phase 1 provides for the disposal into the mine of about 400 MTU per year of spent, unconsolidated fuel. The unconsolidated fuel will be packaged at the repository. In Phase 2, facility capacity will be increased to 3,000 MTU per year, and the facility will receive wastes other than spent fuel.

The main surface components of the facility are two waste handling buildings and a waste treatment building (for waste generated onsite). There is also an access portal to the ramp leading to the mine itself. Surface facilities will occupy about 0.6 square kilometers. Most operations take place in hot cells in the waste handling building. Emissions from these cells are discharged through multiple-stage HEPA filters.

The underground repository is a mined area in the tuff matrix of the site. It will occupy about 1,500 acres (6 square kilometers) at a depth of more than 230 meters. Conventional mining room-and-pillar construction will be adequate for the repository.

Radioactive waste will be shipped to the repository in federally licensed transport casks. In the earliest (Stage 1) operations, about 1,000 truck shipments and 500 rail shipments of spent fuel assemblies, amounting to a total of 400 MTU, would be received each year. In the second phase, receipts would increase to 3,000 MTU per year (DOE86b).

In the first phase, only unconsolidated spent fuel will be emplaced in the repository. In the second phase, spent fuel will also be consolidated and repackaged for burial. This consolidation is essentially the same operation as that performed at the Monitored Retrieval Storage facility .

5.1.3 Emission Controls

The primary emission control for all these facilities is the waste package. The waste is contained in massive steel canisters, which are welded to be leak-free. A secondary emission control for all the facilities is HEPA filters, which are fitted to the cells in which operations that could release radionuclides to the atmosphere take place. HEPA filters are also provided for the underground area ventilation stack of the Yucca Mountain mine.

5.2 BASIS OF THE EXPOSURE AND RISK EVALUATION

5.2.1 Emissions

As none of the high-level waste disposal facilities is in operation, source terms must be based on engineering estimates. The Agency has reviewed the estimates made by DOE and has found that they are conservative. Thus, the DOE's engineering estimates of source terms are used in this evaluation. The estimated emissions for each facility are given in Table 5-2.

Table 5-2. Emissions from normal operations at HLW disposal facilities.

Radionuclide	Release Rates (Ci/y)	
	WIPP	Yucca
H-3		2.8E+2
C-14		1.1E+1
Kr-85		1.4E+4
I-129		2.8E-2
Pu-238	6.6E-8	
Pu-239	4.6E-8	
Pu-240	1.0E-8	
Pu-241	2.8E-6	
Am-241	1.6E-7	
Cm-244	2.4E-8	

Source: DOE86a

5.2.1.1 Waste Isolation Pilot Plant

Emissions to air from normal operations arise from radioactive contamination of the surface of received containers and from containers found damaged or defective on receipt. Calculations of emissions are based on the design maximum annual throughput of 34,000 drums and 2,200 boxes of CH TRU waste and 250 canisters of RH TRU waste. The emission values given in Table 5-2 were obtained from DOE documents (DOE80, DOE86a). The HEPA filter decontamination value appears to be too high, but this is counterbalanced by the very conservative assumptions as to the extent of surface contamination and of defective packages.

It is assumed that all the contact-handling packages have surface contamination at the maximum level permitted by the Waste Acceptance Criteria and that 100 drums and 10 boxes per year are defective or damaged. It is estimated that 0.1 percent of the surface radioactivity of contaminated CH TRU packages is resuspended and becomes airborne in the waste-handling (w-h) building, and that a further 0.1 percent becomes resuspended in the underground disposal area. It is also estimated that 1 percent of the content of defective packages is spilled in the w-h building and that 0.1 percent of this spilled amount becomes airborne. The material that becomes airborne in the w-h building is discharged to the atmosphere through two stages of HEPA filtration, with an estimated decontamination factor of 10^6. The exhaust air from the underground area bypasses filtration except when monitors indicate a high radioactivity level.

It is assumed that all the remote-handling packages have surface contamination at the maximum level permitted by the Waste Acceptance Criteria and that one package per year is defective or damaged. It is estimated that 0.1 percent of the surface radioactivity of contaminated RH TRU packages is resuspended and becomes airborne in the w-h building and that a further 0.1 percent becomes resuspended in the underground disposal area. It is further estimated that 0.1 percent of the content of damaged or defective packages becomes airborne in the hot cell. The airborne activity in the w-h building is discharged to the atmosphere through two stages of HEPA filtration.

The only pathways for direct emission to the air after closure would be from volcanic action or a hit by a meteorite (Sm82). The mine is placed very deep in a non-volcanic area. Only a meteorite so large that its occurrence is extremely improbable could penetrate to this depth. The post-closure emission rate to air is therefore assumed to be zero.

5.2.1.2 Yucca Mountain Geologic Repository

Any emissions to air from normal operations would arise primarily from handling spent fuel assemblies. The fraction of failed fuel rods is estimated at 0.02 percent (Wo83). In addition, during consolidation, there is some damage to fuel rods that have become bound to the assembly spacers. The fraction of fuel rods damaged in this way is estimated at about 0.3 percent. Only volatile nuclides are projected to be emitted, because all these releases would occur only in filtered hot cells.

In estimating annual emissions, a processing rate of 3,000 MTU of 10-year-old spent fuel per year is assumed. The release fractions of 0.3 for krypton-85 and 0.1 for iodine-129 given in Regulatory Guide 1.25 (NRC72) have been used, and release fractions of 0.1 for tritium and carbon-14 have been assumed.

5.2.2 <u>Other Parameters Used in the Assessment</u>

5.2.2.1 Dispersion

5.2.2.1.1 Discharge Height and Location

Useful information on stack characteristics is available only for the Waste Isolation Pilot Plant, the only facility whose design is sufficiently advanced. For the other facility, the characteristics of the WIPP waste-handling building stack have been used since operations in there are very similar to the operations at WIPP. Again for lack of information, it is assumed that the discharge points are at the center of the site. In the WIPP analysis, a correction was made for the momentum of the air leaving the stacks. In the Yucca Mountain analysis, for conservatism, no corrections were made for plume rise or buoyancy. Radioactive wastes from WIPP are discharged through two stacks, one for the waste-handling building and one for storage exhaust. The WIPP stacks are described in Table 5-3.

Table 5-3. WIPP discharge stacks.

Stack	Height (m)	Diameter (m)	Flow Rate (m^3/s)	Velocity (m/s)	Filtration
Waste handing Building	10	2.1	42.6	11.9	Continuous
Storage Exhaust	7.3	3.1	198.6	27.2	Only when airborne activity in area

Sources: DOE86a; Ch88

5.2.2.1.2 Meteorology

Meteorological data from nearby airports or nuclear facilities were used. For the WIPP (Los Medanos) site, which is approximately 25 miles east of Carlsbad, New Mexico, meteorological data from the Carlsbad airport were used. For the Yucca Mountain site, meteorology for the Nevada Test Site (NTS), which is immediately adjacent to Yucca Mountain, was used.

5.2.2.2 Population Distribution

The computer code SECPOP was used to develop the population distributions for the circular area 80 kilometers in radius around each discharge point.

At the WIPP site, there are only a few people closer than 20,000 meters. The location of the nearest individual is 800 meters from the source. The Yucca Mountain site is located on and immediately adjacent to the southwestern corner of the Nevada Test Site (NTS), about 137 kilometers (85 miles) northwest of Las Vegas, Nevada. The Federal Government controls all of the site land. About 33 percent is on the NTS, 40 percent on Nellis Air Force Range (NAFR), and about 25 percent on Bureau of Land Management (BLM) land. None of the land is presently used. The NAFR land is in an area used only for overflight. The nearest grazing lease on the BLM land is about 5 kilometers west of the site. An estimated 4,800 persons live within 80 kilometers of the proposed site, with the nearest individuals approximately 25 kilometers away. The nearest highly populated area is Las Vegas.

5.3 RESULTS OF THE DOSE AND RISK ASSESSMENT

5.3.1 Exposures and Risks to Nearby Individuals and to Regional Population

The locations of individuals receiving the highest dose at the two facilities were 800 meters south-southwest at the WIPP

and 70,000 meters south at the Yucca Mountain facility. There are residences closer than 70,000 meters at the Yucca site, but they are not in a downwind direction. Doses to the selected individuals and to regional populations are presented in Table 5-4. The organs that contribute the most to risk are identified, and the dose to each of these organs is given.

Risks to the nearby individual and fatal cancers projected within a radius of 80 kilometers from each of the facilities are presented in Table 5-5.

Table 5-4. Estimated radiation dose rates from high-level waste disposal facilities.

Facility	Organ	Nearby Individuals (mrem/y)	Regional Population (person-rem/y)
Yucca Mountain Geologic Repository	Thyroid	3.7E-2	1.8E-1
	Remainder	2.6E-3	1.1E-2
	Red Marrow	4.0E-3	1.8E-2
	Breast	2.7E-3	1.2E-2
	Gonads	1.6E-3	6.7E-3
Waste Isolation Pilot Plant	Endosteum	7.6E-4	4.6E-4
	Remainder	3.4E-5	2.1E-5
	Red Marrow	6.2E-5	3.7E-5
	Lungs	6.0E-5	3.0E-5

Table 5-5. Estimated fatal cancer risks from high-level waste disposal facilities.

Facility	Nearby Individuals Lifetime Fatal Cancer Risk	Regional (0-80 km) Population Deaths/y
Waste Isolation Pilot Plant	3E-10	2E-9
Yucca Mountain Geologic Repository	7E-8	4E-6

5.3.1.1 Waste Isolation Pilot Plant

The most important pathway for dose to the selected individual is inhalation, which accounts for over 99 percent of the dose. The most important nuclide is americium-241 (51 percent of

total dose); next are plutonium-238 (20 percent), plutonium-239 (14 percent), plutonium-241 (6 percent), curium-244 (5 percent), and plutonium-240 (3 percent).

The pathway contributing most to population dose is also inhalation (87 percent). Ingestion contributes 13 percent. Air immersion and exposure to ground surface are not significant. Americium-241 contributes 57 percent of the population dose; next come plutonium-238 (14 percent), plutonium-239 (11 percent), plutonium-241 (11 percent), curium-244 (5 percent), and plutonium-240 (2 percent).

5.3.1.2 Yucca Mountain

The most important pathway for dose to the selected individual is ingestion, which accounts for 87 percent of the dose. The inhalation pathway accounts for 10 percent of the dose, 3 percent comes from immersion, and <1 percent from ground surface exposure. The most important nuclides are carbon-14 (55 percent of the total dose) and tritium (31 percent); next is iodine-129 (8 percent) and then krypton-85 (6 percent).

The pathway contributing most to population dose is ingestion (93 percent). Inhalation contributes 5 percent, air immersion 2 percent, and exposure to ground surface, <1 percent. Carbon-14 contributes 59 percent of the population dose; next is tritium, 29 percent, and then iodine-129 with 9 percent and krypton-85, 3 percent.

5.3.3 Distribution of the Fatal Cancer Risk from High-Level Waste Disposal Facilities

The distribution of fatal cancer risks from all high-level waste disposal facilities was obtained by adding the number of people and the projected number of fatal cancers in each risk interval at the two sites. This distribution is presented in Table 5-6. There are no persons in the 0-80 km populations with an estimated lifetime fatal cancer risk greater than 1E-6. The projected deaths/year of operations in the regional populations is 4E-6.

5.4 SUPPLEMENTARY CONTROL OPTIONS AND COSTS

The facilities that make up the High-Level Waste Disposal Facility source category are designed with state-of-the-art effluent control systems. The effectiveness of these systems is enhanced by the performance requirements of the waste forms and packages. Given these considerations, and the very small projected risks to nearby individuals (all less than one in one million lifetime) and populations (one fatal cancer per 10,000 years), this evaluation does not address supplementary control options and costs.

Table 5-6. Estimated distribution of the fatal cancer risk to the regional (0-80 km) populations from high-level waste disposal facilities.

Risk Interval	Number of Persons	Deaths/y
1E-1 to 1E+0	0	0
1E-2 to 1E-1	0	0
1E-3 to 1E-2	0	0
1E-4 to 1E-3	0	0
1E-5 to 1E-4	0	0
1E-6 to 1E-5	0	0
< 1E-6	101,000	4E-6
Totals	101,000	4E-6

5.5 REFERENCES

Ch88 Channell, J., Personal Communication with A. Goldin, SC&A, Inc., June 1988.

DOE80 U.S. Department of Energy, "Final Environmental Impact Statement, Waste Isolation Pilot Plant," Report DOE/EIS-0026, October 1980.

DOE85 U.S. Department of Energy, "Mission Plan for the Civilian Radioactive Waste Management Program," Report DOE/RW-0005, 1985.

DOE86a U.S. Department of Energy, "Preliminary Safety Analysis Report, Waste Isolation Pilot Plant," Amendment 9, May 1986.

DOE86b U.S. Department of Energy, "Environmental Assessment, Yucca Mountain Site, Nevada Research and Development Area, Nevada," Report DOE/RW-0073, May 1986.

NRC72 U.S. Nuclear Regulatory Commission, "Assumptions Used for Evaluating the Potential Radiological Consequences of a Fuel Handling Accident in the Fuel Handling and Storage Facility for Boiling and Pressurized Water Reactors," NRC Regulatory Guide 1.25, 1972.

NRC78 U.S. Nuclear Regulatory Commission, "Generic Environmental Impact Statement on Handling and Storage of Spent Light Water Power Reactor Fuel," Report NUREG-0404, March 1978.

NWP83 "Nuclear Waste Policy Act of 1982," Public Law 97-425, 42 USC 10101-10226.

Sm82 Smith, C.B., D.J. Egan, Jr., W.A. Williams, J.M. Gruhlke, C-Y Hung, and B.L. Serini, "Population Risks from Disposal of High-Level Radioactive Wastes in Geologic Repositories" (Draft Report), U.S. Environmental Protection Agency, Report EPA 520/3-80-06, December 1982.

Wo83 Woodley, R.E., "The Characteristics of Spent LWR Relevant to Its Storage in Geologic Repositories," Report HEDL-TME 83-28, Hanford Engineering Development Laboratory, Richland, WA, 1983.

6. ELEMENTAL PHOSPHORUS PLANTS

The elemental phosphorus plant source category consists of five operating and three standby facilities that produce elemental phosphorus by the electric furnace method. These plants have been evaluated in previous EPA assessments under Section 112 of the Clean Air Act and are subject to the NESHAP (40 CFR 61, Subpart K) promulgated on February 5, 1985. The NESHAP established an emissions limit of 21 Ci/y for polonium-210 released from calciners and nodulizing kilns.

This chapter updates the assessment made during the 1983-1984 NESHAPS rulemaking period for radionuclides (EPA84a). Revisions have been made where necessary to reflect the changes in emissions or control technology as reported to the EPA under provisions of the NESHAP. It also incorporates the exposure and risk assessments for two idle plants in Florida that were not addressed in the risk assessment for the 1984 rulemaking.

6.1 DESCRIPTION OF THE SOURCE CATEGORY

6.1.1 Industry Profile

About eight percent of the marketable phosphate rock mined in the United States is used for the production of elemental phosphorus. Elemental phosphorus is used primarily for the production of high grade phosphoric acid, phosphate-based detergents, and organic chemicals. Production of elemental phosphorus has declined from 330,000 metric tons (MT; one short ton is equivalent to 0.9072 metric tons) reported in 1983 to 300,000 MT in 1985 and 240,000 MT in 1986 (BM88).

There are eight elemental phosphorus plants in the United States, located in Florida, Idaho, Montana, and Tennessee. Location, ownership, estimated capacity, and current status of the plants are shown in Table 6-1. The three idle facilities, the two located in Florida and the Monsanto Chemical Company plant in Columbia, Tennessee, are not expected to reopen. The decreasing demand for elemental phosphorus, 27 percent in three years, and the high operating costs, particularly for electricity in Florida, make these plants uneconomic.

Phosphate rock contains from 20 to 200 ppm uranium, 10 to 100 times higher than the 1 to 2 ppm found in typical rocks and soil. Heating the phosphate rock to high temperatures in calciners and electric furnaces, as is done in the production of elemental phosphorus, volatilizes lead-210 and polonium-210 which may result in the release of significant quantities of these radionuclides to the atmosphere.

6.1.2 Process Description

The 1984 Background Information Document (BID) and the supporting report on Airborne Emission Control Technology for the

Elemental Phosphorus Industry (SAI84) provide detailed data on each plant, including design, operation, source and radionuclide content of phosphate rock processed, and analyses of particulate and radionuclide emissions from various parts of the process.

Table 6-1. Elemental phosphorus plants.

Location	Company	Capacity[a] (MT/y of Phosphorus)
Florida		
Pierce[b]	Mobil Chemical Co.	18,000
Tarpon Springs[b]	Stauffer Chemical Co.[c]	21,000
Idaho		
Pocatello	FMC Corporation	122,000
Soda Springs	Monsanto Chemical Co.	95,000
Montana		
Silver Bow	Stauffer Chemical Co.[c]	36,000
Tennessee		
Columbia	Occidental Chemical Co.	45,000
Columbia[b]	Monsanto Chemical Co.	121,000
Mt. Pleasant	Stauffer Chemical Co.[c]	41,000

(a) Estimated capacity in 1984 (SAI84, EPA84b).
(b) These facilities are currently idle (BM88).
(c) In September 1987, Rhone-Poulenc, a French company, acquired the inorganic chemicals business that had belonged to the Stauffer Chemical Company.

Crushed and screened phosphate rock is fed into calciners and heated to the melting point, about 1,300 C. After calcining, the hot nodules are passed through coolers and into storage bins prior to being fed into electric furnaces. The furnace feed consists of the nodules, silica, and coke. A simplified chemical equation for the electric furnace reaction is:

$$2Ca_3(PO_4)_2 + 6SiO_2 + 10C = P_4 + 10CO + 6CaSiO_3$$

Phosphorus and carbon monoxide (CO) are driven off as gases and are vented near the top of the furnace. Furnace off-gases pass through dust collectors and then through water spray condensers where the phosphorus is cooled to the molten state.

The mix of phosphorus and water (phossy water) and mud are then processed to recover the phosphorus. Clean off-gases from the condensers contain a high concentration of CO and are used as fuel in the calciners.

6.1.3 Existing Effluent Controls

Emissions from the calciners are typically controlled by low energy scrubbers. Since the 1984 assessment of this source category, one plant has upgraded its calciner emission controls by installing a high energy scrubber system. Emissions from nodule coolers, transfer points, and furnace tap holes are controlled by either fabric filters or wet scrubbers. Screening plant emissions are usually controlled by fabric filters

6.2 BASIS OF THE EXPOSURE AND RISK ASSESSMENT

6.2.1 Emissions

6.2.1.1 Radionuclide Emission Measurements

6.2.1.1.1 Results of 1975-1980 Emission Testing

During 1975-1980, EPA measured the radionuclide emission rates from three elemental phosphorus plants: FMC in Pocatello, Idaho (EPA77); Stauffer in Silver Bow, Montana (An81a); and Monsanto in Columbia, Tennessee (An81b). Measurements were made from release points representative of all of the major process operations in the production of elemental phosphorus. The stack emission rates measured during these studies are summarized in Table 6-2.

All of the radionuclides are released as particulates except for radon-222, which is released as a gas. Essentially all of the radon-222 and more than 95 percent of the lead-210 and polonium-210 emitted from these facilities are released from the calciner stacks. The high calcining temperatures volatilize the lead-210 and polonium-210 from the phosphate rock, resulting in the release of much greater quantities of these radionuclides than of the uranium, thorium, and radium radionuclides. Analyses of doses and risks from these emissions show that the emissions of polonium-210 and lead-210 are the major contributors to risk from radionuclide emissions from elemental phosphorus plants (see Section 6.3).

6.2.1.1.2 Results of the 1983-1984 Emission Testing

In 1983, EPA conducted extensive additional radionuclide testing at the FMC plant in Pocatello, Idaho (EPA84c, Ra84a) and at the Stauffer plant in Silver Bow, Montana (EPA84d, Ra84b). In early 1984, limited emission testing was done at the Monsanto plant in Soda Springs, Idaho (EPA84e, Ra84c). This testing was limited to calciner off-gas streams and focused primarily on lead-210 and polonium-210 emissions in order to obtain additional

Table 6-2. Radionuclide stack emissions measured at elemental phosphorus plants (1975-1980).[a]

Parameter	FMC Idaho	Stauffer Montana	Monsanto Tennessee
Rock processing rate (MT/y)[b]	1.6E+6	5.3E+5	1.7E+6
U-238 concentration of rock (pCi/g)[c]	22.0	27.0	5.0[d]
Calciner stack emission rate (Ci/y):[e]			
U-238	1.2E-3	2.4E-4	2.2E-3
U-234	1.3E-3	2.0E-4	3.2E-3
Th-230	2.2E-3	1.2E-4	1.4E-3
Ra-226	1.3E-3	3.5E-4	2.1E-3
Rn-222	ND[f]	8.0	9.6
Pb-210	3.0E-3	2.8E-1	4.8E-1
Po-210	6.9	2.0E-1	7.5E-1
Other stacks emission rates (Ci/y):			
U-238	4.0E-2	6.2E-4	1.0E-2
U-234	4.6E-2	7.0E-4	1.0E-2
Th-230	5.3E-3	1.2E-3	1.2E-2
Ra-226	5.9E-3	1.1E-3	9.0E-3
Rn-222	ND	ND	ND
Pb-210	1.5E-2	2.5E-3	ND
Po-210	4.0E-1	5.9E-3	2.7E-3
Fraction of input radionuclides emitted:			
U-238	1.2E-3	6.0E-5	1.4E-3
U-234	1.4E-3	6 2E-5	1.5E-3
Th-230	2.1E-4	9.0E-5	1.5E-3
Ra-226	2.0E-4	9.8E-5	1.7E-3
Rn-222	ND	5.7E-1	1.1
Pb-210	5.1E-4	2.0E-2	5.6E-2
Po-210	2.1E-1	1.4E-2	8.8E-2

(a) Emissions are in particulate form except for radon-222 which is released in gaseous form.
(b) These processing rates were those estimated for these plants at the time of emission testing.
(c) Uranium-238 and its decay products are assumed to be present in equilibrium in the rock.
(d) Calciner feed material was a blend of Tennessee and Florida phosphate rock.
(e) Based on 8,760 hours of plant operation.
(f) ND - Not determined.

information on radionuclide concentrations, particle size distribution, and the lung-clearance classification of these radionuclides in the calciner off-gases. Sampling of the calciner off-gases at the Monsanto plant in Soda Springs, Idaho, was hampered by the unavailability of suitable sampling locations (for details see Ra84c). The major results of the testing are summarized below.

Process Samples

Table 6-3 presents the measured radionuclide concentrations in the calciner feed material and product samples for the three plants studied. At the Stauffer and Monsanto plants, the concentrations of lead-210 and polonium-210 were significantly lower in the calciner product samples than in the feed material, indicating volatilization of these radionuclides during calcining. At the FMC plant, only the polonium-210 concentration was significantly lower in the product samples than in the feed material, indicating lower volatilization of lead-210 during calcining at this plant.

Radionuclide Emission Rates

Table 6-4 shows the measured radionuclide emission rates (μCi/h/calciner) and the estimated annual calciner emissions for the three plants studied.

Particle Size Distribution

Table 6-5 presents the particle size distributions of lead-210 and polonium-210 in the calciner off-gas streams at the FMC and Stauffer plants (these data could not be obtained at the Monsanto plant; see Ra84c). At both plants, most of the polonium-210 (about 75 percent) was associated with particles smaller than 1 um.

Lung-Clearance Classification Studies

Table 6-6 summarizes the dissolution data for lead-210 and polonium-210 in simulated lung fluid for particulate samples from the FMC and Stauffer plants. The tests showed that both lead-210 and polonium-210 dissolved very slowly in the simulated lung fluid; more than 99 percent of these radionuclides remained undissolved after 60 days of testing. It was concluded that both lead-210 and polonium-210 in these materials should be considered Class Y for calculations with the ICRP lung model. A detailed description of the tests and results is presented in PNL-5221 (Ka84).

6.2.1.1.3 Results of 1988 Emission Testing

During 1988, EPA conducted additional radionuclide testing at the FMC plant in Pocatello, Idaho (EPA88a) and at the Monsanto plant in Soda Springs, Idaho (EPA88b). These measurements were a

Table 6-3. Measured radionuclide concentrations in process samples at elemental phosphorus plants - 1983-1984 results.

Plant	Radionuclide Concentrations (pCi/g) Feedstock			Calcined Product		
	U-238	Pb-210	Po-210	U-238	Pb-210	Po-210
FMC Pocatello, ID	21	26	21	22	27	8
Stauffer Silver Bow, MT	42	46	40	42	7	4
Monsanto[a] Soda Springs, ID	32	150	91	37	6	2

(a) Blended feed material. This plant recycles both dropout chamber dust and underflow solids from wet scrubber clarifier.

Table 6-4. Radionuclide emissions from calciners at elemental phosphorus plants - 1983-1984 results.

Plant and Number of Calciners	Average Measured Radionuclide Emissions (μCi/h/calciner)[a]			Estimated Total Calciner Emissions (Ci/y)[b][c]		
	U-238	Pb-210	Po-210	U-238	Pb-210	Po-210
FMC Pocatello, ID (2 calciners)	0.28	7.5	540	0.004	0.12	8.6
Stauffer Silver Bow, MT (2 calciners)	0.04	7.6	50	0.0006	0.11	0.74
Monsanto Soda Springs, ID (1 calciner)	0.78	760	2,900	0.006	5.6	21

(a) For the FMC plant, emission rates were measured from both calciner units, and the reported values are the average emission rates for these units. For the Stauffer plant, emissions for only one of the calciner units (kiln-2) were measured, and the reported values are the average value for this unit. In estimating the total annual emissions, it is assumed that both calciner units have the same emission rate.
(b) Based on 7,400 hours of calciner operation (i.e., 85 percent operating factor).
(c) Conversion of measured emission rates to annual emission estimates for the FMC plant includes an adjustment for processing rate where applicable (see EPA84c).

Table 6-5. Measured distribution of lead-210 and polonium-210 by particle size in calciner stack outlet streams at elemental phosphorus plants - 1983 results.[a]

Plant	Particle Size (Dp50) (um)[b]	Cumulative Activity Percentages	
		Pb-210	Po-210
FMC Pocatello, ID	0.5	44	73
	0.9	58	78
	1.5	68	84
	3	77	88
	10	90	93
Stauffer Silver Bow, MT	0.5	54	50
	0.9	76	74
	1.5	90	90
	3	95	96
	10	99	98

(a) Particle size measurements using cascade impactors could not be made at Monsanto, Soda Springs, ID, because suitable sampling ports and locations were not available.
(b) Dp50 is defined in Ra84a and Ra84b.

Table 6-6. Dissolution of lead-210 and polonium-210 from particulate samples collected from off-gas streams at FMC and Stauffer elemental phosphorus plants.[a]

Plant	Sample Particle Size (um)	Dissolution Time (days)	Fraction of Pb-210 Remaining Undissolved	Fraction of Po-210 Remaining Undissolved
FMC Pocatello, ID	0-3	1.0	0.9984	0.9997
		10	0.9968	0.9984
		59	0.9950	0.9978
	3-10	1.0	0.9933	0.9991
		10	0.9682	0.9979
		59	0.9490	0.9914
Stauffer Silver Bow, MT	0-3	1.0	0.9999	0.9997
		8.9	0.9994	0.9989
		59	0.9978	0.9980
	3-10	1.0	1.0000	0.9997
		8.9	0.9990	0.9992
		59	0.9979	0.9940

(a) Adapted from EPA84a.

followup to those made earlier (1975-1980 and 1983-1984), in order to learn the effect of changes made to the emission systems since the 1983-1984 study. The testing was limited to measuring only lead-210 and polonium-210 in calciner off-gas streams and particle size distributions of the activities emitted.

The emission rates in μCi/h from the calciners at these two facilities for these radionuclides are listed in Table 6-7. At the FMC plant, measurements were conducted only at calciner number 1. Table 6-7 also lists the total curie amounts of lead-210 and polonium-210 emitted annually from calciners tested.

Table 6-8 shows the particle size distributions of lead-210 and polonium-210 in the calciner inlet and outlet streams determined in 1988 at the FMC and Monsanto plants.

Table 6-7. Lead-210 and polonium-210 emissions measured in calciner off-gas streams at two elemental phosphorus plants - 1988.

Plant	Measured Emission Rate per Calciner (μCi/h)		Estimated Total Calciner Emissions (Ci/y)	
	Pb-210	Po-210	Pb-210	Po-210
FMC (EPA88a) Pocatello, ID[a]	(b)	1,208	(b)	7.1[c]
Monsanto (EPA88b) Soda Springs, ID	41	172	0.34[d]	1.4[d]

(a) Emission rates for Calciner 1 only.
(b) The large uncertainty in the lead-210 measurement data for this plant made the lead-210 data invalid.
(c) Based on confidential data on plant production rates.
(d) Based on 8,300 hours of kiln operation.

Table 6-8. Measured distribution of lead-210 and polonium-210 by particle size in calciner stack inlet and outlet streams at elemental phosphorus plants - 1988 results.[a]

Plant	Particle Size Dp50 (um)	Cumulative Activity Percentages Po-210		Pb-210	
		Inlet	Outlet	Inlet	Outlet
FMC (EPA88a) Pocatello, ID	0.5	64	72	30	54
	1	74	82	46	70
	2.5	84	90	64	87
	5	89	95	78	94
	10	93	97	87	98
Monsanto (EPA88b) Soda Springs, ID	0.5	60	70	60	60
	1	90	90	90	90
	2.5	96	96	97	98
	5	98.5	98.5	99.3	99.3
	10	99.4	99.4	99.9	99.7

(a) Measurements were made using cascade impactors.

6.2.1.2 Source Terms Used in the Assessment

Table 6-9 shows the estimated annual calciner emission rates for each of the eight elemental phosphorus plants.

Table 6-9. Estimated annual radionuclide emissions from elemental phosphorus plants.

Plant	Annual Emissions (Ci/y)		
	U-238[a]	Pb-210	Po-210
	Operating Plants		
FMC Corporation[b] Pocatello, ID	3.2E-3	1.4E-1	1.0E+1
Monsanto Chemical Co.[c] Soda Springs, ID	5.0E-4	3.5E-1	1.4E+0
Stauffer Chemical Co.[d] Silver Bow, MT	6.0E-4	1.1E-1	7.4E-1
Stauffer Chemical Co.[e] Mt. Pleasant, TN	3.0E-4	5.8E-2	2.8E-1
Occidental Chemical Co.[f] Columbia, TN	1.0E-4	6.4E-2	3.1E-1
	Idle Plants		
Stauffer Chemical Co.[g] Tarpon Springs, FL	3.5E-3	1.9E-1	1.5E-1
Mobil Chemical Co.[g] Pierce, FL	1.6E-3	1.2E-2	1.3E-2
Monsanto Chemical Co.[h] Columbia, TN	2.0E-3	4.1E-1	6.4E-1

(a) Uranium-238 is assumed to be in radioactive equilibrium with uranium-234, thorium-230, and radium-226 (see Table 6-2). Uranium-238 emissions are estimated by multiplying the mass emissions by the specific activity of uranium in the feedstock.
(b) Based on EPA emission tests in 1983 (EPA84c) and 1988 (EPA88a).
(c) Based on Table 6-7.
(d) Based on Table 6-4.
(e) Assumed similar to emissions from the Occidental Chemical Co. plant at Columbia, TN, and adjusted for production capacity (41 MT/45 MT) (see Table 6-1).
(f) Based on reference Bu85 and an 85 percent operating factor.
(g) Based on reference SAI84.
(h) Based on Table 6-2 and an 85 percent operating factor.

The emission rate estimates for the idle plants are those that would occur if the plants were to resume operation. These values were used to estimate the radiation dose equivalents and fatal cancer risks from the plants.

The risk assessment is based upon the emissions from the calciner stacks, since earlier studies have shown that over 95 percent of the lead-210 and polonium-210 are emitted in the calciner off-gases (see Section 6.2.1.1.1). The sources of the information used to estimate the annual emissions from each facility are listed in the footnotes to Table 6-9. Where available, actual measurements were used. The source terms for uranium-234, thorium-230, and radium-226 were assumed to be equal to uranium-238, since measurements at these facilities have shown these radionuclides to approximate secular equilibrium in calciner off-gases (see Table 6-2). Because it is unlikely that the idle facilities will ever operate again, they are listed separately from the operating facilities.

Lung-clearance classifications and particle size distributions (AMAD) used in this assessment (ICRP Task Group Lung Model) are shown in Table 6-10. These values are the same as those used in the previous assessment (EPA84a).

6.2.1.3 Other Parameters Used in the Assessment

The effluent from calciner stacks normally has a significant heat content that can result in substantial buoyant plume rise. Table 6-11 lists the stack parameters that were used for each of the eight elemental phosphorus plants. However, because of the low heat content of emissions at the Stauffer plant in Silver Bow, Montana, plume rise is affected more by momentum than by buoyancy.

Meteorological data used in the assessment come from nearby weather stations. Population distributions used in the assessment were generated by the computer code SECPOP using 1980 census tract data. For FMC's Pocatello plant and Monsanto's Soda Springs plant, these population data were augmented with actual population distributions for the first 5 km. Table 6-12 shows the number of people living within 80 km of these sites and the source of the meteorological data used in the calculations.

The distance from each facility to the residence of the maximum exposed individual is also listed in Table 6-12. The locations of the individuals at the FMC and Monsanto facilities in Idaho and the Stauffer facility in Montana were selected from actual population distributions and confirmed by personal visits. USGS topographic quadrangle maps were used to identify the nearby residences at the Florida facilities, which were later verified during a demographic survey. For the facilities located in Tennessee, the individuals were placed at 1,500 m in the predominant wind direction from the facilities.

Appendix A provides details of the input parameters supplied to the assessment codes.

Table 6-10. Lung clearance classification and particle sizes used in the assessment.

Radionuclide	Clearance Classification	Particle Size AMAD
Pb-210, Po-210	Y[a]	0.3[a]
U-238, U-234, Th-230	Y[b]	1[b]
Ra-226	W[b]	1[b]

(a) Based on experimental data obtained during emission testing.
(b) Based on values recommended by ICRP (ICRP66) when experimental values are not available.

Table 6-11. Calciner stack emission characteristics.

Plant	Stack Height (meters)	Heat Emission (calories/sec)
	Operating Plants	
FMC, Pocatello, ID	31	9.5E+5
Monsanto, Soda Springs, ID	27	5.0E+5
Stauffer, Silver Bow, MT	27	3.0E+4[a]
Stauffer, Mt. Pleasant, TN	35	6.0E+5
Occidental, Columbia, TN	31	1.2E+6
	Idle Plants	
Stauffer, Tarpon Springs, FL	49	1.7E+5
Mobil, Pierce, FL	26	2.3E+5
	29	1.1E+5
Monsanto, Columbia, TN	35	1.0E+6

(a) Because of the low heat content, plume rise for the Stauffer, Silver Bow, MT, plant was based on momentum rather than buoyancy (see Appendix A).

Table 6-12. Populations within 80 km and distances to the maximum exposed individuals of elemental phosphorus plants with the source of meteorological data used in dose equivalent and risk calculations.

Plant	Number of People Within 80 km[a]	Distance to Maximum Exposed Individual (m)	Source of Meteorological Data[b]
		Operating Plants	
FMC Pocatello, ID	170,000	1,800	Pocatello, ID
Monsanto Soda Springs, ID	100,000	4,000	Pocatello, ID
Stauffer Silver Bow, MT	71,000	2,500	Butte, MT
Stauffer Mt. Pleasant, TN	560,000	1,500	Nashville, TN
Occidental Columbia, TN	920,000	1,500	Nashville, TN
		Idle Plants	
Stauffer Tarpon Springs, FL	1,700,000	2,500	Tampa, FL
Mobil Pierce, FL	1,800,000	750	Orlando, FL
Monsanto Columbia, TN	900,000	1,500	Nashville, TN

(a) Based on 1980 Census.
(b) Data from National Climatic Center, Asheville, NC.

6.3 RESULTS OF THE EXPOSURE AND RISK ASSESSMENT

This section contains an assessment of the radiation exposure and risk of cancer due to radionuclide emissions from elemental phosphorus plants. The assessment addresses the following specific topics:

1) dose equivalent rates to the maximum exposed individual due to radioactive emissions from each facility;

2) collective dose equivalent rates to the regional population (the total number of people residing within 80 km) around each elemental phosphorus plant;

3) the lifetime fatal cancer risk to the maximum exposed individual due to radioactive emissions from each plant; and

4) the number of fatal cancers committed per year in the regional population around each elemental phosphorus plant.

The radiation dose equivalent rates and fatal cancer risks due to radioactive emissions from elemental phosphorus plants were estimated for the maximum exposed individual and the 80-km regional population using AIRDOS-EPA (Mo79) and DARTAB (Be81) codes. Input parameters to the codes are listed in Tables 6-9 to 6-12 and in Appendix A. The results for the idle and operating facilities are listed separately, because it is doubtful that any idle plant will ever reopen.

6.3.1 Radiation Dose Equivalent Rates

The dose equivalent rates to the maximum exposed individual and the collective dose equivalent rates to the regional population for each elemental phosphorus plant are listed in Table 6-13 in order of decreasing rates. Only those organ dose equivalents that contribute 10 percent or more to the risk are listed. Except at the Mobil Chemical Company site near Pierce, Florida, the lung is the only organ that met this criterion and is possibly at significant risk. At the Pierce, Florida site, about 12 percent of the risk results from exposure to endosteal bone from inhaling larger amounts of uranium-238, uranium-234, and thorium-230 relative to lead-210 and polonium-210.

The largest dose equivalent rate (180 mrem/y) is estimated to occur to the lung of the maximum exposed individual near FMC's Pocatello, Idaho plant; the lowest exposed nearby individual resides near the plant at Pierce, Florida, and receives a lung dose of about 7 mrem/y. The locations of these maximum exposed individuals in relation to the elemental phosphorus plants are given in Table 6-12. The largest exposure to people within an 80-km region (1,200 person-rem/year) is also estimated to occur around FMC's Pocatello, Idaho, facility, while the lowest collective dose equivalent rate (72 person-rem/year) is estimated to be to the regional population around the Stauffer Chemical Company plant at Mt. Pleasant, Tennessee. The populations exposed within the 80-km regions are given in Table 6-12. The exposures estimated from the three idle plants in Table 6-13 will not occur if predictions are correct and the facilities fail to reopen.

Table 6-13. Estimated radiation dose equivalent rates to the maximum exposed individual and to the 80-km regional population from elemental phosphorus plants.

Plant	Organ	Maximum Exposed Individuals (mrem/y)	Regional Population (person-rem/y)
		Operating Plants	
FMC Corporation Pocatello, ID	Lung	180	1,200
Monsanto Chemical Soda Springs, ID	Lung	34	80
Stauffer Chemical Silver Bow, MT	Lung	23	120
Stauffer Chemical Mt. Pleasant, TN	Lung	14	72
Occidental Chemical Columbia, TN	Lung	13	150
		Idle Plants	
Monsanto Chemical Columbia, TN	Lung	45	460
Stauffer Chemical Tarpon Springs, FL	Lung	7.3	530
Mobil Chemical Pierce, FL	Lung	7.3	240
	Endosteum	4.1	190

6.3.2 Health Risks

Table 6-14 lists the highest individual risk for each of the five operating and three idle plants considered in this assessment. The locations of these individuals in relation to the elemental phosphorus plants are shown in Table 6-12 and discussed in Section 6.2.1.3.

Ninety-nine percent of the risk is the result of inhaling effluents from the elemental phosphorus plants, and, with the exception of the Mobil plant in Pierce, FLorida, 95 percent of the risk is due to lead-210 and polonium-210 in those effluents. The highest lifetime individual risks occur at the operating FMC and Monsanto plants in Idaho and are estimated to be 6 and nearly 1 fatal lung cancers in 10,000, respectively. The locations of

these individuals were selected from actual population distributions and verified by personal visits during the demographic survey (see Section 6.2.1.3).

The collective risks to the 80-km regional population around each operating elemental phosphorus plant due to airborne effluents from the calciners at these plants are also listed in Table 6-14. The populations within these 80-km regions are listed in Table 6-12. The largest risk is estimated to be to the population of 170,000 around FMC's Pocatello, Idaho, facility. The risk to this population is estimated to be about one cancer every 20 years. The smallest collective risk to an operating plant's regional population occurs at Soda Springs, ID (100,000 persons) and Mt. Pleasant, Tennessee (560,000 persons), and is estimated to be about three deaths in 1,000 years.

The collective risks to the regional populations surrounding the three idle elemental phosphorus plants are also given in Table 6-14. These collective risks are estimated to be about one death in each regional population every 100 years. These risks, however, are nonexistent until one of the plants resumes operation, which is very unlikely due to the decreased demand for phosphorus and high operating costs (see Section 6.1.1).

The DARTAB computer code provides the frequency distribution of lifetime fatal cancer risks for each elemental phosphorus plant. It gives the number of people in each of a series of lifetime risk intervals and the number of cancer deaths that occur annually within each risk interval. This information is summarized in Tables 6-15 and 6-16 for all operating and idle elemental phosphorus plants, respectively. Again, data on the idle facilities are included in the unlikely case that a plant recommences operations. These data reflect the number of deaths expected to occur annually within the 0-80 km populations, which are listed in the second column. For example, 1,800,000 people are at risk in the five regional populations due to their exposure to the radioactive effluents from calciners at all operating elemental phosphorus plants. Within that population, about one fatal lung cancer is expected to occur every 15 years.

Table 6-14. Estimated fatal cancer risks to the maximum exposed individual and to the 80-km regional population from elemental phosphorus plants.[a]

Plant	Individual Lifetime Fatal Cancer Risk	Regional (0-80 km) Population (deaths/y)
	Operating Plants	
FMC Corporation Pocatello, ID	6E-4	6E-2
Monsanto Chemical Soda Springs, ID	8E-5	3E-3
Stauffer Chemical Silver Bow, MT	6E-5	5E-3
Stauffer Chemical Mt. Pleasant, TN	3E-5	3E-3
Occidental Chemical Columbia, TN	3E-5	6E-3
	Idle Plants	
Monsanto Chemical Columbia, TN	9E-5	1E-2
Stauffer Chemical Tarpon Springs, FL	1E-5	2E-2
Mobil Chemical Pierce, FL	1E-5	7E-3

(a) Radon-222 emissions are not included in these estimates. Previous assessments (EPA83) show that radon-222 from calciners of elemental phosphorus plants add little additional risk of fatal cancer (about 1 percent or less of the total risk).

Table 6-15. Estimated distribution of the fatal cancer risk to the regional (0-80 km) populations from operating elemental phosphorus plants.

Risk Interval	Number of Persons	Deaths/y
1E-1 to 1E+0	0	0
1E-2 to 1E-1	0	0
1E-3 to 1E-2	0	0
1E-4 to 1E-3	5,000	1E-2
1E-5 to 1E-4	110,000	4E-2
1E-6 to 1E-5	250,000	2E-2
< 1E-6	1,500,000	6E-3
Totals	1,800,000	7E-2

Table 6-16. Estimated distribution of the fatal cancer risk to the regional (0-80 km) populations from idle elemental phosphorus plants.

Risk Interval	Number of Persons	Deaths/y
1E-1 to 1E+0	0	0
1E-2 to 1E-1	0	0
1E-3 to 1E-2	0	0
1E-4 to 1E-3	0	0
1E-5 to 1E-4	6,800	1E-3
1E-6 to 1E-5	490,000	1E-2
< 1E-6	3,900,000	2E-2
Totals	4,400,000	4E-2

6.4 SUPPLEMENTARY CONTROL OPTIONS AND COSTS

The results of analyses to determine the efficiencies of various alternatives for controlling the polonium-210 and lead-210 emissions from calciner off-gas systems at the five operating elemental phosphorus plants are summarized in Tables 6-17 and 6-18, respectively. The control alternatives considered were the installation of wet (venturi) scrubbers, electrostatic precipitators, a spray dryer followed by a fabric filter, and HEPA (high efficiency particulate air) filters. A detailed description of the analyses of these control alternatives and their efficiencies is presented in EPA88c.

The capital costs estimated to implement the control alternatives and the annualized costs (in 1988 dollars) are presented in Tables 6-19 and 6-20, respectively. Detailed

analyses of the costs and risk reduction, as well as the economic impact, of alternative polonium-210 and lead-210 emission rates for the five operating facilities are presented in EPA88c.

Table 6-17. Estimated Po-210 emission levels achieved by control alternatives.

Control Alternative	Emission Levels (Ci/y)				
			Stauffer		
	FMC	Monsanto	Montana	Tennessee	Occidental
Baseline emissions[a]	10	30	2.4	0.28	0.31
Wet scrubber					
ΔP=2.5 kPa[b]	8.0	21	1.7	0.20	0.22
ΔP=6.2 kPa	4.0	14	1.1	0.13	0.14
ΔP=10 kPa	2.0	3.0	0.24	0.028	0.031
ΔP=20 kPa	1.0	1.5	0.12	0.014	0.016
ESP(c)					
200 SCA[d]	2.9	7.4	0.59	0.07	0.08
400 SCA	1.0	2.7	0.19	0.02	0.02
600 SCA	0.38	0.84	0.07	0.01	0.01
800 SCA	0.14	0.29	0.02	<0.01	<0.01
Spray dryer/ fabric filter	0.043	0.15	0.012	0.001	0.002
HEPA filter	<0.001	<0.001	<0.001	<0.001	<0.001

(a) Emissions with only low energy or spray scrubber. Additional systems are added to these wet scrubbers except for spray dryer/fabric filter.
(b) kPa - kilopascal which equals 4 inches of water.
(c) ESP - electrostatic precipitator.
(d) SCA - specific collection area in ft^2/1000 acfm.

Table 6-18. Estimated Pb-210 emission levels achieved by control alternatives.

Control Alternative	Emission Levels (mCi/y)				
			Stauffer		
	FMC	Monsanto	Montana	Tennessee	Occidental
Base Line emissions[a]	140	9,500	320	58	64
Wet scrubber					
ΔP=2.5 kPa[b]	70	6,600	220	41	45
ΔP=6.2 kPa	28	2,800	96	17	19
ΔP=10 kPa	9.8	950	32	5.8	6.4
ΔP=20 kPa	5.6	480	16	2.9	3.2
ESP[c]					
200 SCA[d]	25	2,500	85	15	17
400 SCA	8.0	840	28	5.1	5.6
600 SCA	2.8	290	9.6	1.7	1.9
800 SCA	1.0	100	3.5	0.64	0.70
Spray dryer/ fabric filter	0.60	49	1.6	0.29	0.32
HEPA filter	0.003	0.19	<0.01	<0.01	<0.01

(a) Emissions with only low energy or spray scrubber. Additional systems are added to these wet scrubbers except for spray dryer/fabric filter.
(b) kPa - kilopascal which equals 4 inches of water.
(c) ESP - electrostatic precipitator.
(d) SCA - specific collection area in ft^2/1000 acfm.

Table 6-19. Capital cost of control alternatives (1,000 1988 $).

Control Alternative	Plant				
			Stauffer		
	FMC	Monsanto	Montana	Tennessee	Occidental
Wet scrubber					
10 inch ΔP[a]	5,940	2,530	1,690	1,460	2,020
25 inch ΔP	7,810	3,200	1,690	1,870	2,510
40 inch ΔP	8,500	4,460	1,890	2,460	3,230
80 inch ΔP	13,280	6,590	3,870	5,230	6,120
Electrostatic precipitator					
200 SCA[b]	10,640	6,630	2,350	3,140	4,530
400 SCA	15,500	9,860	3,310	4,390	6,500
600 SCA	20,280	12,890	4,080	5,950	8,600
800 SCA	24,790	15,720	4,750	7,390	11,340
Spray dryer/ fabric filter	17,330	10,380	7,540	6,580	10,060
HEPA filtration	4,200	2,870	620	1,020	1,610

(a) 1 inch of water = 0.25 kPa.
(b) SCA - specific collection area in ft^2/1000 acfm.

Table 6-20. Annualized cost of control alternatives (1,000 1988 $).

Control Alternative	Plant				
			Stauffer		
	FMC	Monsanto	Montana	Tennessee	Occidental
Wet scrubber					
10 inch ΔP[a]	1,600	970	660	590	740
25 inch ΔP	2,110	1,200	680	750	920
40 inch ΔP	2,430	1,530	740	930	1,150
80 inch ΔP	3,750	2,220	1,110	1,610	1,910
Electrostatic precipitator					
200 SCA[b]	2,010	1,260	790	640	970
400 SCA	2,840	1,820	830	850	1,320
600 SCA	3,650	2,330	870	1,120	1,670
800 SCA	4,430	2,820	910	1,370	2,030
Spray dryer/ fabric filter	9,700	5,430	3,070	3,120	4,630
HEPA filtration	10,140	15,700	2,960	7,450	10,070

(a) 1 inch of water = 0.25 kPa.
(b) SCA - specific collection area in ft^2/1000 acfm.

6.5 REFERENCES

An81a Andrews, V.E., "Emissions of Naturally Occurring Radioactivity from Stauffer Elemental Phosphorus Plant," ORP/LV-81-4, EPA, Office of Radiation Programs, Las Vegas, NV, August 1981.

An81b Andrews, V.E., "Emissions of Naturally Occurring Radioactivity from Monsanto Elemental Phosphorus Plant," ORP/LV-81-5, EPA, Office of Radiation Programs, Las Vegas, NV, August 1981.

Be81 Begovich, C.L.; Eckerman, K.F.; Schlatter, E.C.; Ohr, S.Y.; and Chester, R.O.; "DARTAB: A Program to Combine Airborne Radionuclide Environmental Exposure Data with Dosimetric and Health Effects Data to Generate Tabulations of Predicted Health Impacts," ORNL-5692, Oak Ridge National Laboratory, Oak Ridge, TN, August 1981.

BM88 U.S. Bureau of Mines, "Mineral Industry Surveys, Phosphate Rock," Bureau of Mines, Washington, DC, January 4, 1988.

Bu85 Buttrey, C.W., Occidental Chemical Co., Columbia, TN, written communication to Winston Smith, EPA, Washington, DC, March 29, 1985.

EPA77 U.S. Environmental Protection Agency, "Radiological Surveys of Idaho Phosphate Ore Processing - The Thermal Plant," ORP/LV-77-3, EPA, Office of Radiation Programs, Las Vegas, NV, 1977.

EPA83 U.S. Environmental Protection Agency, "Draft Background Information Document, Proposed Standards for Radionuclides," EPA 520/1-83-001, EPA, Office of Radiation Programs, Washington, DC, March 1983.

EPA84a U.S. Environmental Protection Agency, "Radionuclides: Background Information Document for Final Rule," Volume II, EPA 520/1-84-022-2, EPA, Office of Radiation Programs, Washington, DC, October 1984.

EPA84b U.S. Environmental Protection Agency, "Regulatory Impact Analysis of Emission Standards for Elemental Phosphorus Plants," EPA 520/1-84-025, EPA, Office of Radiation Programs, Washington, DC, October 1984.

EPA84c U.S. Environmental Protection Agency, "Emissions of Lead-210 and Polonium-210 from Calciners at Elemental Phosphorus Plants: FMC Plant, Pocatello, Idaho," EPA, Office of Radiation Programs, Washington, DC, June 1984.

EPA84d U.S. Environmental Protection Agency, "Emissions of Lead-210 and Polonium-210 from Calciners at Elemental Phosphorus Plants: Stauffer Plant, Silver Bow, Montana," EPA, Office of Radiation Programs, Washington, DC, August 1984.

EPA84e U.S. Environmental Protection Agency, "Emissions of Lead-210 and Polonium-210 from Calciners at Elemental Phosphorus Plants: Monsanto Plant, Soda Springs, Idaho," EPA, Office of Radiation Programs, Washington, DC, August 1984.

EPA88a U.S. Environmental Protection Agency, "Elemental Phosphorus Production - Calciner Off-gases: Final Emission Test Report, FMC Elemental Phosphorus Plant, Pocatello, Idaho," EMB Report No. 88-EPP-02, January 1989.

EPA88b U.S. Environmental Protection Agency, "Elemental Phosphorus Production - Calciner Off-gases: Final Emission Test Report, Monsanto Elemental Phosphorus Plant, Soda Springs, Idaho," EMB Report No. 88-EPP-01, January 1989.

EPA88c U.S. Environmental Protection Agency, "Characterization and Control of Radionuclide Emissions from Elemental Phosphorus Production," EPA 450/3-88-015, February 1989.

ICRP66 International Radiological Protection Commission Task Group on Lung Dynamics, "Deposition and Retention Models for Internal Dosimetry of Human Respiratory Tract," Health Physics 12:173-207, 1966.

Ka84 Kalkwarf, D.R., and Jackson, P.O., "Lung-Clearance Classification of Radionuclides in Calcined Phosphate Rock Dust," PNL-5221, Pacific Northwest Laboratories, Richland, WA, August 1984.

Mo79 Moore, R.E.; Baes, C.F. III; McDowell-Boyer, L.M.; Watson, A.P.; Hoffman, F.O.; Pleasant, J.C.; and Miller, C.W.; "AIRDOS-EPA: A Computerized Methodology for Estimating Environmental Concentrations and Dose to Man from Airborne Releases of Radionuclides," EPA 520/1-79-009, Oak Ridge National Laboratory for U.S. EPA, Office of Radiation Programs, Washington, DC, December 1979.

Ra84a Radian Corporation, "Emission Testing of Calciner Off-gases at FMC Elemental Phosphorus Plant, Pocatello, Idaho," Volumes I and II, prepared for the Environmental Protection Agency under Contract No. 68-02-3174, Work Assignment No. 131, Radian Corporation, P.O. Box 13000, Research Triangle Park, NC, 1984.

Ra84b Radian Corporation, "Emission Testing of Calciner Off-gases at Stauffer Elemental Phosphorus Plant, Silver Bow, Montana," Volumes I and II, prepared for the Environmental Protection Agency under Contract No. 68-02-3174, Work Assignment No. 132, Radian Corporation, P.O. Box 13000, Research Triangle Park, NC, 1984.

Ra84c Radian Corporation, "Emission Testing of Calciner Off-gases at Monsanto Elemental Phosphorus Plant, Soda Springs, Idaho," Volumes I and II, prepared for the Environmental Protection Agency under Contract No. 68-02-3174, Work Assignment No. 133, Radian Corporation, P.O. Box 13000, Research Triangle Park, NC, 1984.

SAI84 Science Applications, Inc., "Airborne Emission Control Technology for the Elemental Phosphorus Industry," Final Report to the Environmental Protection Agency, prepared under Contract No. 88-01-6429, SAI, P.O. Box 2351, La Jolla, CA, January 1984.

7. COAL-FIRED UTILITY AND INDUSTRIAL BOILERS

7.1 INTRODUCTION

The coal-fired boiler source category includes utility and industrial boilers. Approximately 1,200 utility boilers burn coal to generate electricity, while more than 50,000 industrial boilers burn coal to provide electricity, process heat, and space heat for in-house use. These two classes of facilities account for approximately 90 percent of the coal burned in the United States. The remaining 10 percent is consumed by residential and commercial boilers used for space and hot water heating.

Coal contains trace quantities of natural uranium and thorium. Isotopes of uranium and thorium and their decay products are released to the air with the particulate matter in fly ash. There are no Federal or state regulations that directly limit emissions of radionuclides from coal-fired utility or industrial boilers. However, since radionuclide emissions are directly related to particulate emissions, regulations and standards limiting particulate releases indirectly limit radionuclide releases as well. The Federal Clean Air Act (the Act) sets ambient air quality standards for several pollutants emitted by coal-burning facilities. These ambient standards limit emissions of sulfur dioxide, oxides of nitrogen, carbon monoxide, lead, and particulate matter 10 microns or less in diameter (40 CFR 50.6, 50.7, 50.8, 50.11, 50.12). In addition to ambient air standards, the Act also establishes new source performance and prevention of significant deterioration standards. For particulate matter, the limits and standards include:

<u>The PM-10 Standard:</u> Particulate matter 10 microns or less in diameter emitted from a coal-burning facility may not result in ambient levels of such particles in excess of 150 ug/m^3 in more than one 24-hour period per year, or in excess of an annual average of 50 ug/m^3.

<u>Prevention of Significant Deterioration (PSD):</u> PM-10 emissions from a coal-burning facility may not result in an increase in ambient PM-10 levels of 10 ug/m^3 24-hour maximum or 5 ug/m^3 annual average in Class I areas, and 37 ug/m^3 24-hour maximum or 19 ug/m^3 annual average in Class II areas.

<u>New Source Performance Standards:</u> All new coal-fired boilers with capacities greater than 73 MW thermal input are subject to a particulate emission limit of 43.3 ng/J (0.10 lb/million BTU) heat input, and new utility coal-fired boilers of this size are limited to 13 ng/J (0.03 lb/million BTU) heat input. New boilers with capacities less than 73 MW are subject to limits prescribed by State Air Quality Implementation Plans.

The states (or local air quality control regions) set emission standards for existing sources as part of the State Air Quality Implementation Plans (SIPs). The SIPs are developed to assure compliance with Federal ambient air quality and prevention of significant deterioration standards.

7.1.1 Coal Use in the United States

In 1982, approximately 20 percent of U.S. energy needs were met by burning coal: 74 percent to generate electricity and about 24 percent for industrial use (DOE85). In 1982, combustion of coal at utility and industrial boilers accounted for approximately 15,000 X 10^{12} BTU heat input. The utility boilers consumed approximately 85 percent of the total (12,500 X 10^{12} BTU), and the industrial sector consumed approximately 15 percent (2,500 X 10^{12} BTU) (Me86). In utility and industrial applications, bituminous, sub-bituminous, and lignite coals are much more widely used than anthracite.

Although natural gas, oil, and nuclear fission can be used to generate electricity thermally, the cumulative use of these energy sources has decreased in recent years. Indigenous natural gas supplies have been tapped heavily, and most natural gas in the United States is used for space heating, other residential heating applications, and as a petrochemical and fertilizer source. It is expected that coal will supply more than half of the electricity generated in the United States in the foreseeable future.

7.1.2 Radionuclides in Coal

The mineral matter contained in coal includes small quantities of naturally-occurring uranium and thorium and their decay products. Tables 7-1 and 7-2 present the half-lives and principal radiations of the major decay products of uranium-238 and thorium-232, respectively. Data showing typical uranium and thorium concentrations in coal are presented in Table 7-3 by region and coal rank. The values presented for "All Coals" at the end of the table represent more than 5,000 coal samples from all major production areas in the United States. The distribution of uranium concentrations in coal presented in Table 7-4 indicates that 98 percent of all coals have uranium concentrations of 10 ppm or less.

The release rates of uranium and thorium and their decay products depend on their initial concentrations in the coal, the ash content of the coal, and boiler-specific factors including furnace design, heat rate, and effluent control system efficiency. In this assessment, the values of 1.3 ppm uranium and 3.2 ppm thorium (representing the geometric mean for all coals) and an average value of 10 percent ash are used in conjunction with boiler-specific emission factors.

Table 7-1. Major decay products of uranium-238.

Radionuclide	Half-life	Principal radiation (Mev)		
		Alpha	Max. Beta	Gamma
Uranium-238	4.5×10^9 y	4.20		
Thorium-234	24 d		0.191	0.093
Protactinium-234m	1.2 m		2.29	1.001
Uranium-234	2.5×10^5 y	4.77		
Thorium-230	8.0×10^4 y	4.68		
Radium-226	1.6×10^3 y	4.78		0.186
Radon-222	3.8 d	5.49		
Polonium-218	3.1 m	6.00		
Lead-214	27 m		0.65	0.352
Bismuth-214	20 m		1.51	0.609
Polonium-214	1.6×10^{-4} s	7.69		
Lead-210	22 y		0.015	0.047
Bismuth-210	5.0 d		1.160	
Polonium-210	138 d	5.31		

y = years, d = days, h = hours, m = minutes, s = seconds

Source: Le67

Table 7-2. Major decay products of thorium-232.

Radionuclide	Half-life	Principal radiation (Mev)		
		Alpha	Max. Beta	Gamma
Thorium-232	1.4×10^{10} y	4.01		
Radium-228	6.7 y		0.055	
Actinium-228	6.1 h		1.11	0.908
Thorium-228	1.9 y	5.43		0.084
Radium-224	3.6 d	5.68		0.241
Radon-220	55 s	6.29		
Polonium-216	0.15 s	6.78		
Lead-212	10 h		0.589	0.239
Bismuth-212	60 m		2.25	0.727
Polonium-212	3.1×10^{-7} s	8.78		
Thallium-208	3.1 m		1.80	2.614

y = years, d = days, h = hours, m = minutes, s = seconds

Source: Le67

Table 7-3. Typical uranium and thorium concentrations in coal.

Region/ Coal Rank	Uranium Range (ppm)	Uranium Geometric mean (ppm)	Thorium Range (ppm)	Thorium Geometric mean (ppm)	Reference
Pennsylvania					
Anthracite	0.3 - 25	1.2	2.8 - 1.4	4.7	Sw76
Appalachian					
Bituminous	<0.2 - 11	1.0	2 - 48	2.8	Sw76
NR	0.4 - 3	1.3	1.8 - 9	4.0	IGS77
Bituminous	NR	1.1	NR	2.0	SRI77
Bituminous	0.1 - 19	1.2	NR	3.1	Zu79
Illinois Basin					
NR	0.3 - 5	1.3	0.7 - 0.5	1.9	IGS77
Bituminous	0.2 - 43	1.4	<3 - 79	1.6	Sw76
Bituminous	0.2 - 59	1.7	0.1 - 79	3	Zu79
Northern Great Plains					
Bituminous-Sub-bituminous	<0.2 - 3	0.7	<2 - 8	2.4	Sw76
Sub-bituminous	<0.1 - 16	1.0	0.1 - 42	3.2	Zu79
Lignite	0.2 - 13	1.2	0.3 - 14	2.3	Zu79
Western					
NR	0.3 - 3	1.0	0.6 - 6	2.3	IGS77
Rocky Mountain					
Bituminous-Sub-bituminous	0.2 - 24	0.8	<3 - 35	2.0	Sw76
Sub-bituminous	0.1 - 76	1.9	0.1 - 54	4.4	Zu79
Bituminous	0.1 - 42	1.4	<0.2 - 18	3.0	Zu79
All Coals	<0.1 - 76	1.3	<0. 1- 79	3.2	Zu79

Note: 1 ppm uranium-238 is equivalent to 0.33 pCi/g of coal.
1 ppm thorium-232 is equivalent to 0.11 pCi/g of coal.
NR Not reported

Table 7-4. Uranium concentrations and distributions in coal.

Uranium Concentration (ppm)	Number of Coals Analyzed	Percent of Coals Within Uranium Concentration Range
less than 2	2,669	71.5
2 - 4	666	17.9
4 - 6	207	5.5
6 - 8	67	1.8
8 - 10	39	1.0
10 - 12	26	0.7
12 - 14	17	0.5
14 - 16	12	0.3
16 - 18	7	0.2
18 - 20	5	0.1
20 - 30	9	0.2
30 - 60	5	0.1
60 -130	2	0.05

Source: Fa79

7.2 UTILITY BOILERS

7.2.1 General Description

7.2.1.1 Profile of Utility Boilers

In 1985, 2.47 trillion kilowatt-hours of electricity were generated in the United States (WA87) of which 56.8 percent was generated by burning coal. In 1986, there were approximately 1,200 coal-fired utility boilers in the United States, with a net generating capacity of 305 GW (DOE86).

A few terms commonly used in discussions of electric generation are:

"Capacity factor" (often referred to as "capacity") is the ratio of energy actually produced in a given period to the energy that would have been produced in the same period had the unit been operated continuously at its rated power.

"Availability" refers to the fraction of a year during which a unit is capable of providing electricity to the utility grid at its rated power after planned and forced outages have been accounted for.

"Capability" is the percentage of nameplate capacity which is needed to meet an average seasonal demand; this term is beginning to replace "capacity factor" as a hallmark of plant operation.

Power plants are designed and operated to serve three load classes:

Base-load plants, which operate near full capacity most of the time (or are dispatched to operate in the most efficient region of the heat rate curve).

Intermediate-load (or cycling) plants, which operate at varying levels of capacity each day (about 40 percent utilization on an average annual basis).

Peaking plants, which operate only a few hours per day (about 700-800 hours per year).

Fossil-fueled steam-electric generating plants now dominate base-load and intermediate-load service. Coal is rarely the primary fuel for a peaking plant. New units have historically been used for base-load generation; cycling capacity has been obtained by downgrading the older, less efficient base-load equipment as more replacement capacity comes on line.

In 1979, the average capacity factor for coal-fired units operating in the base-load mode was 65 percent; for units operating in a cycling mode, 42 percent (TRI79). The availability of a coal-fired unit generally declines with increasing generating capacity. Generating units with capacities of less than 400 MW have average availabilities of more than 85 percent; those with capacities of more than 500 MW, only 74 to 76 percent (An77). The operating mode affects the heat rate of the plant; for example, changing the capacity factor from 42 to 70 percent changes the heat rate from 12.3 to 9.2 MJ/kWh.

7.2.1.2 Process Description

As coal is burned, the minerals in the coal melt and then condense into a glass-like ash; the quantity of ash depends on the mineral content of the coal. A portion of the ash settles to the bottom of the boiler (bottom ash), and the remainder enters the flue gas stream (fly ash). Partitioning between fly ash and bottom ash for various types of coals and various boiler designs is given in Table 7-5 (Me86).

The distribution of particulates between bottom ash and fly ash depends on the firing method, the ash fusion temperature of the coal, and the type of boiler bottom (wet or dry). Fuel-firing equipment can be divided into three general categories: stoker furnace (dry bottom), either spreader or non-spreader; cyclone furnace (wet bottom); and pulverized-coal furnace (dry or wet bottom).

Table 7-5. Coal ash distribution by boiler type.

Furnace Type	Percent Fly Ash/Percent Bottom Ash		
	Bituminous	Lignite	Anthracite
Pulverized dry bottom	80/20	35/65	85/15
Pulverized wet bottom	65/35	-	-
Cyclone	13.5/86.5	30/70	-
Stoker	60/40	35/65	5/95

Stoker furnaces are usually small, older boilers ranging in thermal capacity from 7.3 to 73 MW. Of the coal-fired boilers sold from 1965 to 1973, none exceeded 143 MW (thermal); 63 percent were stoker-fired; 41 percent, spreader stoker; 9 percent, underfeed stoker; and 13 percent, overfeed stoker. Stokers require about 3.3 kg of coal per kilowatt-hour and are less efficient than units handling pulverized coal. Stoker-fired units produce relatively coarse fly ash. Sixty-five percent of the total ash in spreader stokers is fly ash.

Cyclones are high-temperature combustion chambers for burning crushed coal. The high temperatures in the furnace lead to the formation of a molten slag which drains continuously into a quenching tank. Roughly 80 percent of the ash is retained as bottom ash. As of 1974, only 9 percent of the coal-fired utility boiler capacity was of the cyclone type, and no boilers of this kind have been ordered by utilities in the past seven years (Co75).

A pulverized-coal furnace burns coal which has been pulverized to a fine powder (approximately 200 mesh) and which is injected into the combustion zone in an intimate mixture with air. Pulverized-coal furnaces are designed to remove bottom ash as either a solid (dry-bottom boiler) or as a molten slag (wet-bottom boiler).

The dry-bottom, pulverized-coal-fired boiler, in which the furnace temperature is kept low enough to prevent the ash from melting, is now the most prevalent type of coal-burning unit in the utility sector. About 80 to 85 percent of the ash produced in the dry-bottom, pulverized-coal-fired boiler is fly ash. The remainder of the ash falls to the bottom of the furnace, where it is either transported dry, or cooled with water and removed from the boiler as a slurry, which is transported to an ash-settling pond.

The distribution of utility coal-fired boiler types, by percent, is:

Pulverized dry bottom: 76%
Pulverized wet bottom: 11%
Cyclone: 11%
Stoker: 2%

The use of fluidized bed combustors, which generally have lower air emissions, continues to increase. In addition, the Clean Coal Project of the U.S. Department of Energy is developing technology for burning a mixture of coal and liquid fuel derived from coal which should considerably reduce fly ash (Tr81). Incorporation of clean coal technology into coal combustion uses is expected to accelerate, but an accurate prediction of the rate of acceleration is not now possible.

7.2.1.3 Current Status of Emission Control

As was noted in the introduction, the National Ambient Air Quality Standards (NAAQS) require air emission controls for virtually all coal-fired utility boilers in the United States. Four types of conventional control devices are commonly used for particulate control in utility boilers: electrostatic precipitators (ESPs), mechanical collectors, wet scrubbers, and fabric filters. Comprehensive evaluations of each control device have been given in a number of publications (for example, De77, De79, Co77).

ESPs, wet scrubbers, and fabric filters are all theoretically capable of better than 99.8 percent collection efficiencies for ash as small as one micron in diameter. However, actual collection efficiency for a specific unit can be considerably less (as low as 50 percent) because of specific loading parameters and ash characteristics. Operational collection efficiencies of ESPs and fabric filters, in particular, have improved during the last decade, so that, at present, almost all collectors are at least 98 percent efficient during normal operation. Hot-side precipitators have been developed to overcome problems posed by resistive fly ash. The recent development of high-temperature fabrics has resulted in an increase in the use of fabric filters for controlling utility boiler emissions.

Selection of the particulate control device for a given unit is affected by many parameters, including boiler capacity and type, inlet loading, fly ash characteristics, inlet particle size distribution, applicable regulations, and characteristics of the control device itself. The location of particulate control devices with respect to SO_2 scrubber systems in a plant depends on the type of scrubbers (wet or dry) installed; these devices are located upstream of a wet scrubber system or downstream of a spray dryer system.

Table 7-6 gives the distribution of particulate control equipment for utility boilers burning bituminous coal; this distribution is representative of control equipment on boilers using other types of coal.

Table 7-6. Distribution of particulate control equipment for bituminous coal-fired utility boilers.

Combustion System	% Distribution of Particulate Control Equipment			
	ESP	Centrifugal Separator	Other	No Control
Pulverized dry bottom				
Number basis	60	17	15	8
Capacity basis	79	10	10	1.6
Fuel consumption basis	83	11	5	1.0
Pulverized wet bottom				
Number basis	52	20	16	11
Capacity basis	66	11	9	14
Fuel consumption basis	77	9	7	7
Cyclone				
Number basis	61	5	18	7
Capacity basis	83	8	5	4
Fuel consumption basis	89	5	3	3
Stoker				
Number basis	8	36	25	32
Capacity basis	29	32	20	19
Fuel consumption basis	44	25	14	16

Source: Me86

7.2.2 Basis for the Risk Assessment of Utility Boilers

The risk assessment of utility boilers is based on reference (actual) facilities selected to represent large and typical utility boilers. The reference facilities were selected from a data base of almost one thousand utility boilers maintained by the EPA's Office of Air Quality Planning and Standards (OAQPS). The boilers in the data base account for virtually all of the coal used by utility boilers.

In selecting the reference utility boilers, the boilers in the data base were classified according to the number of persons living within 50 km of the plant. Urban plants were defined as 3,000,000 persons or more, suburban plants as 800,000 to 3,000,000 persons, rural plants as 100,000 to 800,000 persons, and remote plants as less than 100,000 persons. This classification shows 34 utility boilers located in urban areas, 234 located in suburban areas, 567 located in rural areas, and 150 located in remote areas.

For each location, the large reference plant and the typical reference plant were chosen based on the estimate of total particulate emissions. The large reference plants were used in the evaluation of the risks to nearby individuals and the typical reference plants were used to evaluate the magnitude and distribution of the population risk.

7.2.2.1 Radionuclide Emissions

The trace amounts of uranium-238, thorium-232, and their decay products present in coal are released to the atmosphere as particulates in the fly ash. The quantities emitted depend on the concentrations of the radionuclides in the coal burned, the type of boiler and emissions controls operating, the capacity, capacity factor, and heat rate for the boiler operation, and the ash partitioning. The distribution of ash between the bottom and fly ash depends on the firing method, the type of coal, and the type of furnace (dry bottom or wet bottom). For pulverized-coal, dry-bottom units, 80-85 percent of the ash is fly ash.

Measured emission factors for uranium-238 and thorium-232, on both a weight and heat input basis, are given for various types of boilers and control systems in Tables 7-7 and 7-8 (Me86). Although uranium and thorium are in secular equilibrium with their progeny in coal, measurements have shown that certain radionuclides are partitioned unequally between the bottom ash and fly ash (Be78, Wa82). The concentration mechanism is not fully understood; however, one explanation is that certain elements are preferentially concentrated on the particle surfaces, resulting in their depletion in the bottom ash and their enrichment in the fly ash (Sm80).

The highest concentration of the trace elements in fly ash is found in particulates in the 0.5 to 10 micron range, the size range that can be inhaled and deposited in the lung. These fine particles are less efficiently removed by particulate control devices than larger particles. Uranium is enriched in the fly ash relative to the bottom ash, particularly in particles less than 1 micron in diameter. The enrichment factor for uranium is about 2. Thorium, on the other hand, shows virtually no small particle enrichment and is only slightly enriched in the fly ash. Enrichment factors based on measured values obtained at utility boilers are shown in Table 7-9 for the radioisotopes in coal that may present a health risk (EPA81).

The total amount of uranium released from all utility boilers can be estimated using the average uranium content of coal (1.3 ppm), the average ash content of coal (10 percent), an enrichment factor of 2, and the total quantity of particulate matter released from utility boilers. The OAQPS estimates the total quantity of suspendible particulate matter from all the utility boilers in its data base to be 3 X 10^8 kg/y (EPA89). Using this value, an estimated 3 Ci/y of uranium-238 is released from all utility boilers.

Table 7-7. U-238 emission factors for coal-fired utility boilers.

Boiler Type/ Control	Emission Factor (pCi/g) Average	Emission Factor (pCi/g) Range	Emission Factor (pCi/MBTU) Average	Emission Factor (pCi/MBTU) Range
Pulverized Dry Bottom				
ESP	6.55	3.3-9.2	295.3	6.3-675.9
ESP/Scrubber	7.1	-	22.5	-
Scrubber	5.6	-	73.7	-
Pulverized Slag Bottom				
Mechanical/ESP	0.004	-	-	-
Cyclone				
ESP	1.5	0.005- 3.0	68.0	
Scrubber	13.9	0.017-37.5	1757.8	301.2-3214.3
Stoker				
Fabric Filter	0.003	-	-	-
ESP	0.5	-	-	-
Unspecified				
ESP	16.1	7-34.2	294	101.6-486.5

MBTU means million BTU.
Source: Table 3-173 of Me86.

Table 7-8. Th-232 emission factors for coal-fired utility boilers.

Boiler Type/ Control	Emission Factor (pCi/g) Average	Emission Factor (pCi/g) Range	Emission Factor (pCi/MBTU) Average	Emission Factor (pCi/MBTU) Range
Pulverized Dry Bottom				
ESP	3.0	0.6-5.3	170.0	50.3-180.7
ESP/Scrubber	7.14	-	22.7	-
Scrubber	2.78	-	36.5	-
Cyclone				
ESP	1.8	-	40.8	-
Scrubber	2.09	1.5-2.68	170.0	110.2-229.7
Stoker				
ESP	0.5	-	13.8	-

MBTU means million BTU.
Source: Table 3-174 of Me86.

Table 7-9. Enrichment factors for radionuclides.

Nuclide	Enrichment Factor
Uranium series	
Uranium-238	2
Uranium-234	2
Thorium-230	1
Radium-226	1.5
Radon-222	20
Lead-210	5
Polonium-210	5
Thorium series	
Thorium-232	1
Radium-228	1.5
Thorium-228	1
Radium-224	1.5
Radon-220	20
Lead-212	5
Bismuth-212	5

7.2.2.2 Source Terms Used in the Risk Assessment

Source terms for the reference facilities were developed by using the plant specific data in the OAQPS data base on boiler types, heat input, and control systems. For each reference plant, the average emission factors (in pCi/MBTU) from Tables 7-7 and 7-8 for the appropriate boiler type and control technique were multiplied by the heat input (MBTU/y) to yield the uranium-238 and thorium-232 source terms. Source terms for the decay products were determined using the enrichment factors presented in Table 7-9. The estimated uranium-238 and thorium-232 source terms for the typical and large reference boilers are presented in Tables 7-10 and 7-11, respectively.

7.2.2.3 Other Parameters Used in the Risk Assessment

The reference plants were assessed using site-specific data for each plant. Releases were modeled using actual stack heights and buoyant plume rise calculated on the basis of the units' heat inputs and capacity factors. Meteorological data from nearby airports were used, and the 0-80 km population distributions were generated using the SECPOP computer code. Risks to nearby individuals were assessed by assuming that individuals reside in the predominant wind direction at a distance of 750 meters from the plant.

Food fractions appropriate to the type of location were assumed. Details of the parameters input to the assessment codes are presented in Appendix A.

Table 7-10. Emissions for typical coal-fired utility boilers.

Facility	U-238 (mCi/y)	Th-232 (mCi/y)
Remote	5.6	3.2
Rural	5.6	2.3
Suburban	9.4	5.4
Urban	5.1	2.4

Table 7-11. Emissions for large coal-fired utility boilers.

Facility	U-238 (mCi/y)	Th-232 (mCi/y)
Remote	32	19
Rural	42	25
Suburban	40	24
Urban	39	22

7.2.3 Results of the Dose and Risk Assessment of Utility Boilers

7.2.3.1 Estimated Doses from Utility Boilers

The estimated dose rates for both the nearby individuals and the regional population are presented in Table 7-12 for typical utility boilers, and in Table 7-13 for large boilers. Organ dose rates that represent 10 percent or more of the total risk are reported.

7.2.3.2 Estimated Risks from Utility Boilers

The estimated lifetime fatal cancer risk to nearby individuals and the estimated risk to the regional population are given in Tables 7-14 and 7-15. The greatest lifetime fatal cancer risk estimated is 3E-5. This estimate, obtained for the large reference utility boiler in a rural location, reflects the risk that could occur at the location of maximum offsite dose and presumes that a large fraction of the foodstuffs consumed by the individual are grown at that location.

Table 7-12. Estimated radiation dose rates from typical coal-fired utility boilers.

Facility	Organ	Nearby Individuals (mrem/y)	Regional Population (person-rem/y)
Remote	Gonads	1.6E-1	-
	Breast	1.5E-1	-
	Remainder	1.3E-1	1.5E+0
	Red Marrow	1.3E-1	1.1E+0
	Lung	1.2E-1	1.8E+0
	Bone Surface	-	1.1E+1
Rural	Bone Surface	7.9E-1	1.2E+1
	Remainder	1.2E-1	1.6E+0
	Red Marrow	8.7E-2	1.2E+0
	Gonads	4.7E-2	-
	Lung	-	2.3E+0
Suburban	Gonads	1.5E-1	-
	Breast	1.4E-1	-
	Lung	1.3E-1	6.1E+1
	Red Marrow	1.1E-1	-
	Remainder	1.1E-1	4.5E+0
	Bone Surface	-	5.9E+1
Urban	Lung	1.1E-1	1.6E+2
	Gonads	8.7E-2	-
	Breast	8.1E-2	-
	Red Marrow	7.0E-2	-
	Remainder	6.7E-2	-
	Bone Surface	-	1.2E+2

Table 7-13. Estimated radiation dose rates from large coal-fired utility boilers.

Facility	Organ	Nearby Individuals (mrem/y)	Regional Population (person-rem/y)
Remote	Bone Surface	1.1E+0	2.9E+1
	Remainder	3.1E-1	4.4E+0
	Gonads	2.7E-1	3.1E+0
	Red Marrow	2.7E-1	-
	Lung	-	1.6E+1
Rural	Bone Surface	1.2E+1	3.9E+1
	Remainder	2.1E+0	5.6E+0
	Red Marrow	1.5E+0	4.2E+0
	Gonads	1.0E+0	2.0E+0
	Lung	-	6.6E+0
Suburban	Gonads	5.2E-1	5.3E+0
	Breast	4.9E-1	-
	Remainder	4.1E-1	9.2E+0
	Red Marrow	4.0E-1	7.9E+0
	Lung	4.0E-1	1.9E+1
	Bone Surface	-	5.9E+1
Urban	Gonads	3.5E-1	6.8E+0
	Breast	3.2E-1	-
	Remainder	2.7E-1	9.6E+0
	Red Marrow	2.7E-1	-
	Lung	2.6E-1	3.7E+1
	Bone Surface	-	6.5E+1

Table 7-14. Estimated fatal cancer risk from typical coal-fired utility boilers.

Facility	Nearby Individuals Lifetime Fatal Cancer Risk	Regional (0-80 km) Population Deaths/y
Remote	3E-6	2E-4
Rural	1E-6	2E-4
Suburban	3E-6	3E-3
Urban	2E-6	6E-3

Table 7-15. Estimated fatal cancer risk from large coal-fired utility boilers.

Facility	Nearby Individuals Lifetime Fatal Cancer Risk	Regional (0-80 km) Population Deaths/y
Remote	6E-6	1E-3
Rural	3E-5	9E-4
Suburban	1E-5	2E-3
Urban	7E-6	3E-3

7.2.3.3 Projection of Fatal Cancer Risk to U.S. Population

The risks (deaths/year) and the distribution of the risks estimated for the four typical reference utility boilers were extrapolated to estimate the risk attributable to radionuclide releases from all utility boilers. The extrapolation was made as follows. First, the risk distribution for each of the four typical reference facilities was multiplied by the number of facilities in that population category (150 remote plants, 567 rural plants, 234 suburban plants, 34 urban plants). Next, the distributions were summed for all four population categories. The problem of overlap was addressed by limiting the population at risk to the actual U.S. population. Finally, because the emissions from the reference facilities are typical emissions and not mathematical averages, a scaling factor had to be used so that the risk being estimated for all plants corresponds to the risk from the approximately 3 curies of uranium-238 that are estimated to be emitted annually by all coal-fired utility

boilers. The resulting distribution is presented in Table 7-16. The total estimated number of deaths per year due to coal-fired utility boiler radionuclide emissions is 0.4.

Table 7-16. Estimated distribution of the fatal cancer risk to the regional (0-80 km) populations from all coal-fired utility boilers.

Risk Interval	Number of Persons	Deaths/y
1E-1 to 1E+0	0	0
1E-2 to 1E-1	0	0
1E-3 to 1E-2	0	0
1E-4 to 1E-3	0	0
1E-5 to 1E-4	0	0
1E-6 to 1E-5	130,000	1E-3
< 1E-6	240,000,000	4E-1
Totals	240,000,000	4E-1

The estimates of maximum individual risk and total deaths per year obtained in this assessment agree closely with the estimates made by OAQPS (EPA89). In making its estimates, the OAQPS scales the risks estimated for a model plant, with average stack characteristics, sited on typical urban, suburban, and rural demographies to each of the plants in its data base. The OAQPS uses two scaling factors. The first is the ratio of the model plant's uranium-238 emissions to the estimated uranium-238 emissions for each plant, calculated on the basis of heat input and the appropriate boiler/control-type specific emission factor. The second is the ratio of the population within 50 km of the model plant to the actual population within 50 km of each plant.

7.2.4 Supplementary Control Options and Costs

Existing boilers can be retrofitted with additional electrostatic precipitators to reduce emissions to the level prescribed for new sources (13 ng/J). With all coal-fired utility boilers operating with particulate emissions of 13 ng/J (0.03 lb/MBTU) of heat input, the current 12,500 x 10^6 MBTU annual heat input would result in about 1.7 x 10^8 kg of particulate releases. This is roughly half of the current estimate of particulate releases. The source term and potential health impact would therefore be reduced by about a factor of 2. The estimate of the total deaths per year would drop to 0.2.

The EPA's Office of Air Quality Planning and Standards has estimated the costs of retrofitting all existing utility coal-fired boilers to meet the control level of 13 ng/J to be about $13 billion in capital cost (1982 dollars) and about $3.4 billion in annual costs (RC83).

7.3 INDUSTRIAL BOILERS

7.3.1 General Description

Coal-fired industrial boilers are used primarily to produce process steam, generate electricity for the industrial producer's own use onsite, and provide space and water heat. Boilers are used in virtually every industry, from small manufacturing plants to large concerns. Major users are smelters, steel, aluminum and copper fabrication, pulp and paper manufacture, and the chemical industry. In 1974, about 90 percent of the coal burned in industrial boilers was consumed by the steel, aluminum, chemical, and paper industries (EPA80). That fraction has not changed materially.

7.3.1.1 Process Description

Three basic types of boilers are used in the industrial sector: (1) water tube, (2) fire tube, and (3) cast iron.

Water tube boilers are designed so that water passes through the insides of tubes that are heated externally by direct contact with hot combustion gases. The process produces high-pressure, high-temperature steam with a thermal efficiency of about 80 percent. Water tube boilers range in capacity from less than 3 MW to more than 200 MW thermal input.

Fire tube boilers are designed to allow hot combustion gas to flow through the tubes, while the water to be heated is circulated outside the tubes. These boilers are usually smaller than 9 MW thermal input.

Cast iron boilers are designed like fire tube boilers, with heat transfer from hot gas inside the tubes to circulating water outside the tubes, but cast iron is used rather than the steel used in fire tube boilers. Cast iron has a lower heat capacity and is a better conductor of heat than most steels. Cast iron boilers generally have capacities of less than 3 MW.

Table 7-17 lists the approximate number of industrial boilers in the United States, as of 1981, and their installed capacities (EPA81). Water tube units represent 89 percent of the total installed capacity in terms of heat input. Since the amount of coal burned influences the level of emissions to the environment, emissions from water tube boilers largely determine the radiological impact of coal-fired industrial boilers.

Table 7-17. Numbers and capacities of industrial boilers.

Boiler Type	Unit Capacity (MW Thermal Input) 0-3	3-15	15-30	30-75	>75
Water Tube Units	683	2309	1290	1181	423
Total MW	835	22225	27895	50825	59930
Fire Tube Units	8112	1224			
Total MW	5650	7780			
Cast Iron Units	35965				
Total MW	6330				

There are two main types of coal-fired industrial boilers: pulverized coal and stoker-fired. Pulverized coal units burn coal while it is suspended in air. Units range in size from 30 MW to over 200 MW heat input. A stoker unit has a conveying system that feeds the coal into the furnace and provides a grate upon which the coal is burned. Stokers are generally rated at less than 120 MW heat input. The three main types of stoker furnaces are spreader, overfeed (or chain grate), and underfeed. Each of the boiler types is discussed below.

Pulverized Coal-Fired Boilers

Coal is pulverized to a light powder and pneumatically injected through burners into the furnace. If the furnace is designed to operate at a high temperature (typically 1,600° C), the ash remains in a molten state until it collects in a hopper at the bottom of the furnace. The high temperature units are known as "wet bottom" units. "Dry bottom" units operate at lower combustion temperatures (1,200 - 1,600° C) with the bottom ash remaining in the solid state.

Spreader Stoker

Coal is suspended and burned as a thin, fast-burning layer on a grate, which may be stationary or moving. Feeder units are used to spread the coal over the grate area, and air is supplied over and under the grate to promote good combustion.

Overfeed Stokers

Coal is fed from a hopper onto a moving grate that enters the furnace. Combustion is finished by the time the coal reaches the far end of the furnace, and ash is discharged to a pit.

Underfeed Stokers

Coal may be fed horizontally or by gravity, and the ash may be discharged from the ends or sides. Usually the coal is fed intermittently to the fuel bed with a ram, the coal moving in what is in effect a retort, and air is supplied through openings in the side grates.

7.3.1.2 Emissions and Emission Controls

7.3.1.2.1 Particulate Emissions by Boiler Type

The fractional distribution of ash between the bottom ash and fly ash directly affects the particulate emission rate and is a function of the following parameters:

Boiler firing method. The type of firing is the most important factor in determining ash distribution. Stoker-fired units emit less fly ash than pulverized coal-fired boilers.

Wet or dry bottom furnaces. Dry bottom units produce more fly ash.

Boiler load. Particulate emissions are directly proportional to the amount (load) of coal burned.

7.3.1.2.2 Existing Control Technology

As in the case of utility boilers, radionuclides are emitted with the particulates in the fly ash. The technologies commonly used to remove particulates from effluent gas from coal-fired industrial boilers are the same as those used on utility boilers and have been discussed in a Section 7.2.1.3. However, unlike the utility boilers, a large fraction of industrial boilers operate without particulate emission controls or with low-efficiency controls such as multiclones.

7.3.2 Basis for the Risk Assessment of Industrial Boilers

Characteristics of individual industrial boilers vary considerably. The majority of these plants are very small, but the larger plants have heat inputs comparable to those of utility boilers. The risk assessment of industrial boilers is based on a single reference plant. The reference plant has the largest estimated release of total particulates of the industrial boilers in OAQPS' data base of about 500 industrial boilers (EPA89). The boilers in the OAQPS data base represent a stratified random sample of more than 2,000 industrial boilers located throughout the United States.

The untypically large emissions from this plant, reflecting its large heat input and relatively inefficient multiclone

control system, provide a conservative estimate of the health risks posed by radionuclide emissions from industrial boilers.

7.3.2.1 Radionuclide Emissions

Radionuclide release rates from industrial boilers have not been measured. Therefore, the source term for the reference facility is estimated using the actual heat input of the plant and an emission factor derived for utility boilers. The annual release of uranium-238 from this facility is estimated to be 8 mCi. The source term also includes 4 mCi/y of thorium-232. Release rates of the uranium and thorium decay products are estimated using the enrichment factors given in Table 7-9. This is a conservative assumption, as these enrichment factors were developed for utility boilers and probably overstate the amount of polonium-210 and lead-210 actually released by industrial boilers.

7.3.2.2 Other Parameters Used in the Risk Assessment

The reference plants were assessed using site-specific data for each plant. Releases were modeled using actual stack height and buoyant plume rise calculated on the basis of the unit's heat input and capacity factor. Meteorological data from a nearby airport were used, and the 0-80 km population distributions were generated using the SECPOP computer code. Risks to nearby individuals were assessed by assuming that individuals reside in the predominant wind direction at a distance of 250 meters from the plant.

As the reference facility is located in a rural area, food fractions appropriate to a rural location were assumed. Details of the parameters input to the assessment codes are presented in Appendix A.

7.3.3 Results of Dose and Risk Assessment of Industrial Boilers

7.3.3.1 Estimated Doses and Risks from Industrial Boilers

The estimated dose rates from the large industrial reference facility are presented in Table 7-18. Organ doses that represent 10 percent or more of the total risk are reported. The lifetime fatal cancer risk for nearby individuals is estimated to be 7E-6. This estimate reflects the risk that could occur at the location of maximum offsite dose and presumes that a large fraction of the foodstuffs consumed by the individual are grown at that location. The radionuclide releases from the reference plant are estimated to cause 1E-3 deaths/year in the regional population.

Table 7-18. Estimated radiation dose rates from the reference coal-fired industrial boiler.

Organ	Nearby Individuals (mrem/y)	Regional Population (person-rem/y)
Bone Surface	6.5E+0	5.6E+1
Remainder	9.0E-1	5.8E+0
Red Marrow	6.1E-1	-
Lung	-	2.1E+1

7.3.3.2 Distribution of the Fatal Cancer Risk

The magnitude and distribution of the fatal cancer risk estimated for the reference facility were extrapolated to obtain an estimate of the risk attributable to radionuclide releases from all industrial boilers. It is estimated that the total airborne release of uranium-238 from industrial coal-fired boilers is about 3 Ci/y (EPA89). Using this estimate, the results from the reference facility were scaled to obtain the potential health impact of all industrial boilers. Table 7-19 presents the resulting distribution which indicates an estimated 0.4 deaths per year.

Table 7-19. Estimated distribution of the fatal cancer risk to the regional (0-80 km) populations from all coal-fired industrial boilers.

Risk Interval	Number of Persons	Deaths/y
1E-1 to 1E+0	0	0
1E-2 to 1E-1	0	0
1E-3 to 1E-2	0	0
1E-4 to 1E-3	0	0
1E-5 to 1E-4	0	0
1E-6 to 1E-5	*	*
< 1E-6	240,000,000	4E-1
Total	240,000,000	4E-1

* The results of the risk assessment of the model facility indicate that there may be individuals in this risk interval. However, data are insufficient to provide quantitative estimates.

7.3.4 Supplementary Controls Options and Costs

A full evaluation of supplementary control options and costs has not been performed for industrial boilers. Existing boilers could be retrofitted with electrostatic precipitators (ESPs). It is estimated that retrofitting ESPs at industrial boilers with heat inputs $>2 \times 10^6$ MBTU/hr would reduce particulate emissions by a factor of approximately 2.

7.4 REFERENCES

An77 Anson, D., Availability of Fossil-Fired Steam Plants, EPRI-FP-422 SR, Electric Power Research Institute, Palo Alto, CA, 1977.

Be78 Beck, H.L., Perturbation of the Natural Radiation Environment Due to the Utilization of Coal as an Energy Source, Proceedings, DOE/UT Symposium on the Natural Radiation Environment, Houston, TX, 1978.

Co77 Considine, D.M. (ed.), Energy Technology Handbook, McGraw-Hill, NY, 1977.

Co75 Cowherd, C. et al., Hazardous Emission Characteristics of Utility Boilers, NTIS PB-245-915, 1975.

De77 Dennis, R., et al., Filtration Model for Coal Fly Ash with Glass Fabrics, EPA 600/7-77-084, U.S. Environmental Protection Agency, Research Triangle Park, NC, 1977.

De79 Dennis, R. and K.A. Klemm, Fabric Filter Model Format Change, Vol.1, Detailed Technical Report, EPA 600/7-79-0432, U.S. Environmental Protection Agency, Research Triangle Park, NC, 1979.

DOE85 U.S. Department of Energy, Annual Energy Outlook, Energy Information Agency, Washington, DC, 1985.

DOE86 U.S. Department of Energy, Annual Energy Outlook, Energy Information Agency, Washington, DC, 1986.

EPA81 U.S. Environmental Protection Agency, The Radiological Impact of Coal-fired Industrial Boilers (Draft Report), Office of Radiation Programs, Washington, DC, 1981.

EPA80 U.S. Environmental Protection Agency, Fossil Fuel-Fired Industrial Boilers--Background Information for Proposed Standards, Chapters 3-5, Research Triangle Park, NC, June 1980.

EPA89 U.S. Environmental Protection Agency, "Coal and Oil Combustion Study: Summary and Results," draft report in preparation, Office of Air Quality, Planning and Standards, Research Triangle Park, NC, scheduled for publication during 1989.

Fa79 Facer, J.F., Jr., Uranium in Coal, U.S. Department of Energy Report, GJBX-56(79), Washington, DC, 1979.

IGS77 Illinois State Geological Survey, Trace Elements in Coal: Occurrence and Distribution, NTIS Report No. PB-270-922, June 1977.

Le67 Lederer, C.M.; Hollander, J.M.; and I. Perlman, Table of Isotopes, Sixth Edition, John Wiley and Sons, NY, 1967.

Me86 Mead, R.C., Post B.K.; and G.W. Brooks, Summary of Trace Emissions from, and Recommendations of Risk Assessment Methodologies for, Coal and Oil Combustion Sources, Radian No. 203-024-41, Radian Corporation, Research Triangle Park, NC, 1986.

RC83 Radian Corporation, Boiler Radionuclide Emissons Control: The Feasibility and Costs of Controlling Coal-fired Boiler Particulate Emissions, Prepared for the Environmental Protection Agency, January 1983.

SRI77 Stanford Research Institute, "Potential Radioactive Pollutants Resulting from Expanded Energy Programs," NTIS Report No. PB-272-519, August 1987.

Sw76 Swanson, V.E., et al., "Collection, Chemical Analysis, and Evaluation of Coal Samples in 1975," Department of the Interior, Geological Survey, Open File Report 76-468, 1976.

Sm80 Smith, R.D., The Trace Element Chemistry of Coal During Combustion and the Emissions from Coal-Fired Plants, Progress in Energy and Combustion Science 6, 53-119, 1980.

TRI79 Teknekron Research, Inc., "Utility Simulation Model Documentation, Vol. 1, R-001-EPA-79, Prepared for the Environmental Protection Agency, Washington, DC, July 1979.

Tr81 Trigillo, G., Volume Reduction Techniques in Low-Level Radioactive Waste Management, NUREG-/CR 2206, U.S. Nuclear Regulatory Commission, 1981.

Wa82 Wagner, P. and N.R. Greiner, Third Annual Report, Radioactive Emissions from Coal Production and Utilization, October 1, 1980-September 30, 1981, LA-9359-PR, Los Alamos National Laboratory, Los Alamos, NM, 1982.

Zu79 Zubovic, P., et al., "Assessment of the Chemical Composition of Coal Resources," USGS Expert Paper Presented at the United Nations Symposium on World Coal Prospects, Katowice, Poland, April 15-23, 1979.

8. INACTIVE URANIUM MILL TAILINGS

8.1 DESCRIPTION OF INACTIVE URANIUM MILL TAILINGS SITES

Twenty-four former uranium processing sites were designated as Title I sites under the Uranium Mill Tailings Radiation Control Act (UMTRCA) of 1978. The Inactive Uranium Mill Tailings source category comprises 18 final disposal sites where the tailings and other wastes from these site are being consolidated and stabilized for long-term isolation. Radon-222, the decay product of the residual radium-226 in the tailings, is emitted to the air from the tailings. Radon emissions from licensed uranium mill tailings sites are addressed in Chapter 9.

8.1.1 Rulemaking History and Current Regulations

In enacting the UMTRCA (Public Law 95-604, 42 USC 7901), the Congress found that:

- "Uranium mill tailings located at active and inactive mill operations may pose a potential and significant radiation health hazard to the public, and that..."

- "Every reasonable effort should be made to provide for the stabilization, disposal, and control in a safe and environmentally sound manner of such tailings in order to prevent or minimize radon diffusion into the environment and to prevent or minimize other environmental hazards..."

To these ends, the Act required the EPA to set generally applicable standards to protect the public against both radiological and nonradiological hazards posed by residual radioactive materials at uranium mill tailings sites. Residual radioactive material means (1) tailings waste resulting from the processing of ores for the extraction of uranium and other valuable constituents, and (2) other wastes, including unprocessed ores or low grade materials at sites related to uranium ore processing. The term tailings will be used to refer to all of these wastes.

The UMTRCA divided uranium mill tailings sites into two groups: Title I covering inactive and abandoned sites and Title II covering those sites for which licenses had been issued by the Nuclear Regulatory Commission (NRC) or its predecessor or by an Agreement State. Twenty-four sites have been designated Title I sites under the UMTRCA. Under this Act, the EPA was required to develop general standards to govern the remedial activities conducted by the Secretary of Energy or his designee under section 275a. of the Atomic Energy Act of 1954, at the sites identified under Title I. The Department of Energy (DOE) is responsible for the cleanup and long-term stabilization of the tailings at these sites, consistent with the generally applicable standards developed by the EPA.

Under the UMTRCA, the EPA was required to promulgate standards before the DOE could begin cleanup of the Title I sites. These standards were required, to the maximum extent practicable, to be consistent with the requirements of the Solid Waste Disposal Act (SWDA) as amended. The SWDA includes the provisions of the Resource Conservation and Recovery Act (RCRA).

Because some buildings had been found to be contaminated with tailings resulting in high radiation levels, interim standards for cleanup of residual radioactivity that had contaminated land and buildings were published in the Federal Register on April 22, 1980. This allowed DOE to proceed with the cleanup of offsite tailings contamination without waiting for the formal promulgation of a regulation through the EPA rulemaking process. At the same time, proposed standards for the cleanup of the inactive mill tailings were published for comment.

The proposed cleanup standards were followed by proposed disposal standards that were published in the Federal Register on January 9, 1981. The disposal standards applied to the tailings at the 24 designated sites and were designed to place them in a condition which would be safe for a long time. Final standards for the disposal and cleanup of inactive uranium mill tailings were issued on January 5, 1983.

The American Mining Congress and others immediately petitioned the Tenth Circuit Court of Appeals for a review of the standards. On September 3, 1985, the Tenth Circuit Court upheld the inactive mill tailings standards, with the exception of the groundwater protection portions which were remanded to EPA for revision. The EPA is currently developing new groundwater standards under this rule. The disposal standard that applies to the 24 Title I sites (40 CFR 192, Subpart A) requires long-term stabilization of the tailings and establishes a design standard so that post-stabilization radon-222 releases do not exceed an emission rate of 20 $pCi/m^2/s$.

8.1.2 Identification and Status of Sites

The tailings contain residual radioactive materials, including traces of unrecovered uranium and most of its decay products, as well as various heavy metals and other elements, often at levels exceeding established standards. Of the 24 processing sites designated under Title I of the UMTRCA, 23 are situated in the generally semi-arid to arid western United States. The site locations vary from isolated, sparsely populated rural settings to populated urban communities.

The DOE has developed and is implementing a program for remedial actions at these 24 sites. The DOE's Uranium Mill Tailings Remedial Action Program (UMTRAP) calls for the removal of tailings from sites in highly populated areas or where the long-term stabilization is threatened by flooding or could result in

the contamination of groundwater. Under Public Law 95-604, as amended, the DOE is to complete disposal and stabilization by the end of fiscal year (FY) 1994. To date, disposal at seven sites has been completed, and tailings at all sites are scheduled to be covered by February 1993 (DOE88). The quantity of tailings and proposed remedial action are summarized for each site in Table 8-1. The information is Table 8-1 shows that once the DOE has completed its program, there will be 19 disposal sites. However, since the remedial action at the Converse County site calls for disposal under 40 feet of cover, there will be 18 sites where there is a potential for radon-222 emissions that could cause risks to public health.

8.1.3 Existing Emission Controls

Previous analyses have shown that the only effective means of controlling radon emissions from the tailings is to cover the tailings with an earthen cover thick enough to attenuate the radon fluxing from the tailings. As discussed in Appendix B, earthen covers reduce the amount of radon released to the air by retaining the radon in the cover long enough for it to decay. The 40 CFR 192 standards require that the cover be designed so that the average radon flux does not exceed 20 $pCi/m^2/s$. Generally accepted models are available to demonstrate the adequacy of the design (Ro84). The design flux from the covers that the DOE has approved for these piles range from the UMTRCA limit of 20 $pCi/m^2/s$ to 0.5 $pCi/m^2/s$ (see Section 8.2, Table 8-2).

At the sites where remedial actions are pending, no controls are currently in place to reduce radon emissions. Thin interim earthen covers have been used at some sites and may reduce the amount of radon released to the air, but these are intended primarily to control wind erosion of the tailings. At sites where long-term stabilization under UMTRCA has been completed, thick earthen covers have been placed on the tailings, and the radon fluxes will likely be below the long-term design flux.

8.2 BASIS OF THE EXPOSURE AND RISK ASSESSMENT

Previous assessments have evaluated the risks from radon-222 releases from these sites under both the assumption that the tailings remain unreclaimed and that the stabilization and disposal of tailings under UMTRCA just meets the 20 $pCi/m^2/s$ cover design. In this assessment, the risks that will be incurred once disposal in accordance with UMTRCA is completed are evaluated, along with alternatives of limiting post-disposal flux to 6 and 2 $pCi/m^2/s$, respectively. The evaluation of the risks that would be incurred if the tailings remain unreclaimed has been dropped. This reflects the fact that the DOE is proceeding, as required by Public Law 95-604, with the reclamation of these sites, and that all sites are scheduled to be under cover by early 1993.

Table 8-1. Quantity of tailings and planned remedial actions at inactive uranium mill tailings sites.[a]

Site	Quantity of Tailings (10^6 tons)	Proposed Action	Schedule[b] Start	Finish
Monument Valley, AZ	1.2	Removal to Mexican Hat Site	FY90	FY91
Tuba City, AZ	0.8	Stabilization in place	UW[c]	FY90
Durango, CO	1.6	Removal to Bodo Canyon Site	UW	FY90
Grand Junction, CO	1.9	Removal to Cheney Site	UW	FY93
Gunnison, CO	0.5	Removal to Landfill Site	FY90	FY92
Maybell, CO	2.6	Stabilization in place	FY91	FY92
Naturita, CO	0.6	Removal to Dry Flats Site	FY91	FY92
New Rifle, CO	2.7	Removal to Estes Gulch Site	UW	FY92
Old Rifle, CO	0.4	Removal to Estes Gulch Site	UW	FY92
Slick Rock (NC)[d], CO	0.04	Removal to Slick Rock (UC)	-	DONE
Slick Rock (UC)[e], CO	0.35	Stabilization in place	-	DONE
Lowman, ID	0.09	Stabilization in place	FY92	FY92
Ambrosia Lake, NM	2.6	Stabilization in place	UW	FY90
Shiprock, NM	1.5	Stabilization in place	-	DONE
Belfield, ND	-	Removal to Bowman Site	FY92	FY93
Bowman, ND	-	Stabilization in place	FY92	FY93
Lakeview, OR	0.13	Removal	-	DONE
Canonsburg, PA	0.4	Stabilization in place	-	DONE
Falls City, TX	2.5	Stabilization in place	FY90	FY92
Green River, UT	0.12	Stabilization in place	UW	DONE
Mexican Hat, UT	2.2	Stabilization in place	UW	FY91
Salt Lake City, UT	1.7	Removal to S. Clive Site	-	DONE
Converse County, WY	0.19	Stabilization in place	UW	FY89
Riverton, WY	0.9	Removal to UMETCO's Gas Hills Licensed Site	UW	FY91

(a) DOE88
(b) The start and finish dates refer to construction activities to stabilize and cover the tailings. The finish dates do not include development and implementation of the Surveillance and Monitoring Program or Certification that the remedial action is complete.
(c) UW = underway, i.e., remedial actions to stabilize the tailings have been initiated.
(d) North Continent pile
(e) Union Carbide pile

The radon releases from the tailings at the 18 disposal sites that will remain once UMTRCA disposal is completed are assessed on a site-by-site basis. The following sections detail how the radon release rates were developed and the sources of the meteorological and demographic data used in the assessment. Details of the values that were provided to the AIRDOS-EPA/DARTAB/RADRISK codes are presented in Appendix A.

8.2.1 Development of the Radon Source Terms

Radon source terms for the post-UMTRCA disposal of the tailings at these sites are calculated on the basis of the DOE's estimated radon fluxes through the approved cover designs and the areas of the disposal sites. The DOE's design fluxes and the areas of the disposal sites are those reported in DOE88. For the alternative fluxes of 6 and 2 $pCi/m^2/s$, the source terms are calculated using the lower of the value for the design flux or the appropriate flux limit. The areas of the final disposal sites, the cover design flux rate, and the radon source terms calculated for each pile are shown for each alternative flux in Table 8-2.

8.2.2 Demographic and Meteorological Data

In assessing the exposures and risks that result from the release of radon, site-specific demographic data have been used. Demographic data for the nearby individuals (0-5 km) were developed for each site by surveys conducted during site visits (PNL84). For sites that were estimated to have the highest risks, these data have been updated based on site visits made by SC&A during 1989 or on the basis of information provided by the DOE for new disposal sites (see Appendix A for details). The results of those surveys are shown in Table 8-3. The populations between 5-80 km were generated using the computer code SECPOP. Meteorological data were obtained from the nearest station with data in an appropriate format for use in the assessment codes.

8.3 RESULTS OF THE RISK ASSESSMENT FOR INACTIVE MILLS

The AIRDOS-EPA/DARTAB/RADRISK codes were used to estimate the lifetime fatal lung cancer risk for individuals living near the tailings impoundments and the number of fatal cancers per year in the regional (0-80 km) populations around these sites.

8.3.1 Exposures and Risks to Nearby Individuals

The estimates of the exposure and risk to nearby individuals once UMTRCA disposal is completed are shown in Table 8-4. The lifetime fatal cancer risks for individuals residing near these disposal sites range from 4E-7 to 2E-4. The maximum lifetime fatal cancer risk of about 0.02 percent (2 in 10,000) is estimated at the Shiprock site in New Mexico at a distance of 750 meters from the center of the impoundment.

Table 8-2. Summary of radon-222 emissions from inactive uranium mill tailings disposal sites.[a]

State/Site	Area of Site (acres)	Cover Design Flux ($pCi/m^2/s$)	Radon-222 Releases (Ci/y) UMTRCA Limit	6 $pCi/m^2/s$ Limit	2 $pCi/m^2/s$ Limit
Arizona					
Tuba City	22	9.3	2.6E+1	1.7E+1	5.6E+0
Colorado					
Durango -Bodo Canyon	40	20	1.0E+2	3.1E+1	1.0E+1
Grand Junction - Cheney Site	62	6.5	5.1E+1	4.8E+1	1.6E+1
Gunnison - Landfill Site	38	1.9	9.2E+0	9.2E+0	9.2E+0
Maybell	80	7.1	7.3E+1	6.1E+1	2.0E+1
Naturita - Mill Site	23	5[b]	1.5E+1	1.5E+1	5.9E+0
New/Old Rifle - Estes Gulch	71	20	1.8E+2	5.4E+1	1.8E+1
Slick Rock - Combined	6	5.8	4.4E+0	4.4E+0	1.5E+0
Idaho					
Lowman	5	5.7	3.6E+0	3.6E+0	1.3E+0
New Mexico					
Ambrosia Lake	105	16.7	2.2E+2	8.0E+1	2.7E+1
Shiprock	72	20	1.8E+2	5.5E+1	1.8E+1
North Dakota					
Bowman/Belfield	12	3.9	6.0E+0	6.0E+0	3.1E+0
Oregon					
Lakeview	30	7.5	2.9E+1	2.3E+1	7.7E+0
Pennsylvania					
Canonsburg	18	7	1.6E+1	1.4E+1	4.6E+0
Texas					
Falls City	146	13.2	2.5E+2	1.1E+2	3.7E+1
Utah					
Green River	9	0.5	5.7E-1	5.7E-1	5.7E-1
Mexican Hat	68	12	1.0E+2	5.2E+1	1.7E+1
Salt Lake City - S. Clive	50	20	1.3E+2	3.9E+1	1.3E+1
Totals	857		1.3E+3	5.9E+2	2.2E+2

(a) For each case, emissions are calculated based on the area of the site and the lower of the DOE-approved cover design flux or the appropriate 20, 6, or 2 $pCi/m^2/s$ limit.

(b) Final cover design not available, UMTRCA limit of 5 pCi/g radium assumed due to the fact that only residual contamination exists at this site.

Table 8-3. Estimated number of persons living within 5 km of the centroid of tailings disposal sites for inactive mills[a].

State/Site	Distance (kilometers) 0.0-0.5	0.5-1.0	1.0-2.0	2.0-3.0	3.0-4.0	4.0-5.0	Total
Arizona							
Tuba City	0	18	12	15	0	19	64
Colorado							
Durango	0	0	2	0	0	0	2
Grand Junction	0	0	0	0	26	31	57
Gunnison	0	0	0	8	11	22	41
Maybell	0	0	0	0	0	0	0
Naturita	0	0	65	20	106	902	1,093
New/Old Rifle	0	0	0	16	0	49	65
Slick Rock	3	16	0	3	0	0	22
Idaho							
Lowman	9	76	87	0	16	30	218
New Mexico							
Ambrosia Lake	0	0	0	0	0	0	0
Shiprock	0	155	1,904	1,034	1,016	839	4,948
North Dakota							
Bowman/Belfield	0	3	9	3	6	12	33
Oregon							
Lakeview	0	16	543	1,704	1,457	464	4,184
Pennsylvania							
Canonsburg	950	2,960	7,988	5,126	2,830	2,281	22,135
Texas							
Falls City	0	3	18	0	15	9	45
Utah							
Green River	0	14	257	810	397	20	1,498
Mexican Hat	0	0	279	56	0	0	335
Salt Lake	0	0	0	0	0	0	0
Total	962	3,261	11,164	8,795	5,880	4,678	34,740

(a) PNL84, updated per SC&A site visits and DOE data (see Appendix A).

Table 8-5. Estimated fatal cancers per year in the regional (0-80 km) populations around inactive tailings disposal sites.

State	Mill	Fatal Cancers per Year
Arizona	Tuba City	1.3E-4
Colorado	Durango	6.7E-4
	Grand Junction	9.9E-4
	Gunnison	7.5E-5
	Maybell	1.0E-4
	Naturita	3.5E-5
	New/Old Rifle	5.3E-4
	Slick Rock	6.4E-6
Idaho	Lowman	9.7E-6
New Mexico	Ambrosia Lake	5.3E-4
	Shiprock	3.0E-3
North Dakota	Bowman/Belfield	4.0E-6
Oregon	Lakeview	1.3E-4
Pennsylvania	Canonsburg	4.7E-3
Texas	Falls City	7.1E-3
Utah	Green River	3.3E-6
	Mexican Hat	3.4E-4
	Salt Lake City	4.9E-5
Total		1.8E-2

Table 8-6. Estimated distribution of the fatal cancer risk to the regional (0-80 km) populations from inactive uranium mill tailings disposal sites.

Risk Interval	Number of Persons	Deaths/y
1E-1 to 1E+0	0	0
1E-2 to 1E-1	0	0
1E-3 to 1E-2	0	0
1E-4 to 1E-3	130[a]	4E-4
1E-5 to 1E-4	4,500	2E-3
1E-6 to 1E-5	89,000	2E-3
< 1E-6	4,900,000	1E-2
Totals	5,000,000	2E-2*

(a) All of the individuals in this risk interval reside near the Shiprock disposal site in New Mexico.

* Totals may not add due to independent rounding.

8.3.4 Exposures and Risks Under Alternative Standards

Once all the tailings piles are stabilized and disposed of in accordance with the UMTRCA disposal standard, the radon-222 emission rates will all be at or below 20 pCi/m^2/s. Alternative flux limits of 6 and 2 pCi/m^2/s are also evaluated. Estimates of what the risks would be for these alternative levels are shown in Tables 8-7 through 8-9 for the 6 pCi/m^2/s alternative and in Tables 8-10 through 8-12 for the 2 pCi/m^2/s alternative. The estimates are obtained using the methodology described in Section 8.2, but assuming all piles will achieve the lower of the cover design flux or the radon flux rate assumed for the alternative.

These estimates show that for nearby individuals the maximum lifetime fatal cancer risk could be reduced from 2E-4 at the existing UMTRCA standard to 7E-5 at a limit of 6 pCi/m^2/s or 2E-5 at a limit of 2 pCi/m^2/s. The number of deaths/year that will occur in the regional populations would be reduced by about one-half (from 2E-2 to 1E-2) at a limit of 6 pCi/m^2/s. At a limit of 2 pCi/m^2/s, the deaths/year would be reduced by almost nine-tenths (from 2E-2 to 3E-3).

Table 8-7. Estimated exposures and risks to individuals living near inactive tailings sites assuming a 6 pCi/m^2/s radon flux limit.[a]

State/Site	Maximum Radon Concentration (pCi/l)	Maximum Exposure (WL)	Maximum Lifetime Fatal Cancer Risk to Individual	Distance[b] (meters)
Arizona				
Tuba City	1.3E-3	4.4E-6	6E-6	1,500
Colorado				
Durango	3.3E-3	1.1E-5	2E-5	1,500
Grand Junction	1.3E-3	5.4E-6	7E-6	4,500
Gunnison	1.6E-4	7.0E-7	1E-6	4,500
Maybell	7.4E-4	4.8E-6	7E-6	15,000
Naturita	1.3E-2	3.5E-5	5E-5	250
New/Old Rifle	8.0E-4	2.9E-6	4E-6	2,500
Slick Rock	3.6E-3	1.0E-5	1E-5	250
Idaho				
Lowman	4.4E-3	1.2E-5	2E-5	250
New Mexico				
Ambrosia Lake	1.4E-4	6.9E-7	9E-7	7,500
Shiprock	1.6E-2	4.8E-5	7E-5	750
North Dakota				
Bowman/Belfield	7.5E-4	2.2E-6	3E-6	750
Oregon				
Lakeview	1.5E-3	5.4E-6	7E-6	2,500
Pennsylvania				
Canonsburg	1.7E-2	4.7E-5	7E-5	250
Texas				
Falls City	6.0E-3	2.0E-5	3E-5	1,500
Utah				
Green River	2.1E-4	6.2E-7	9E-7	750
Mexican Hat	5.6E-3	1.9E-5	3E-5	750
Salt Lake City	1.3E-5	8.2E-8	1E-7	15,000

(a) The exposures and risks reflect the emissions calculated from the area of the site and the lower of the DOE-approved cover design flux (see Table 8-2) or the alternative 6 pCi/m^2/s limit.

(b) Distance from center of a homogenous circular equivalent impoundment to the point where the exposures and risks were estimated.

Table 8-8. Estimated fatal cancers per year in the regional (0-80 km) populations around inactive tailings disposal sites assuming a 6 $pCi/m^2/s$ radon flux limit.

State	Mill	Fatal Cancers per Year
Arizona	Tuba City	8.8E-5
Colorado	Durango	2.1E-4
	Grand Junction	9.3E-4
	Gunnison	7.5E-5
	Maybell	8.5E-5
	Naturita	3.5E-5
	New/Old Rifle	1.6E-4
	Slick Rock	6.4E-6
Idaho	Lowman	9.7E-6
New Mexico	Ambrosia Lake	1.9E-4
	Shiprock	9.2E-4
North Dakota	Bowman/Belfield	4.0E-6
Oregon	Lakeview	1.1E-4
Pennsylvania	Canonsburg	4.1E-3
Texas	Falls City	3.1E-3
Utah	Green River	3.3E-6
	Mexican Hat	1.7E-4
	Salt Lake City	1.5E-5
Total		1.0E-2

Table 8-9. Estimated distribution of the fatal cancer risk to the regional (0-80 km) populations from inactive uranium mill tailings disposal sites assuming a 6 pCi/m^2/s radon flux limit.

Risk Interval	Number of Persons	Deaths/y
1E-1 to 1E+0	0	0
1E-2 to 1E-1	0	0
1E-3 to 1E-2	0	0
1E-4 to 1E-3	0	0
1E-5 to 1E-4	2,500	1E-3
1E-6 to 1E-5	28,000	1E-3
< 1E-6	5,000,000	8E-3
Totals	5,000,000	1E-2*

* Totals may not add due to independent rounding.

Table 8-10. Estimated exposures and risks to individuals living near inactive tailings sites assuming a 2 $pCi/m^2/s$ radon flux limit.[a]

State/Site	Maximum Radon Concentration (pCi/l)	Maximum Exposure (WL)	Maximum Lifetime Fatal Cancer Risk to Individual	Distance[b] (meters)
Arizona				
Tuba City	4.4E-4	1.4E-6	2E-6	1,500
Colorado				
Durango	1.1E-3	3.7E-6	5E-6	1,500
Grand Junction	4.2E-2	1.8E-6	2E-6	4,500
Gunnison	1.6E-4	7.0E-7	1E-6	4,500
Maybell	2.4E-4	1.6E-6	2E-6	15,000
Naturita	5.0E-3	1.4E-5	2E-5	250
New/Old Rifle	2.7E-4	9.8E-7	1E-6	2,500
Slick Rock	1.2E-3	3.4E-6	5E-6	250
Idaho				
Lowman	1.9E-3	5.4E-6	6E-6	250
New Mexico				
Ambrosia Lake	4.6E-5	2.3E-7	3E-7	7,500
Shiprock	5.2E-3	1.6E-5	2E-5	750
North Dakota				
Bowman/Belfield	3.6E-4	1.2E-6	2E-6	750
Oregon				
Lakeview	4.9E-4	1.8E-6	2E-6	2,500
Pennsylvania				
Canonsburg	5.6E-3	1.6E-5	2E-5	250
Texas				
Falls City	2.0E-3	6.6E-6	9E-6	1,500
Utah				
Green River	2.1E-4	6.2E-7	9E-7	750
Mexican Hat	1.8E-3	6.1E-6	8E-6	750
Salt Lake City	4.2E-6	2.7E-8	4E-8	15,000

(a) The exposures and risks reflect the emissions calculated from the area of the site and the lower of the DOE-approved cover design flux (see Table 8-2) or the alternative 2 $pCi/m^2/s$ limit.

(b) Distance from center of a homogenous circular equivalent impoundment to the point where the exposures and risks were estimated.

Table 8-11. Estimated fatal cancers per year in the regional (0-80 km) populations around inactive tailings disposal sites assuming a 2 pCi/m^2/s radon flux limit.

State	Mill	Fatal Cancers per Year
Arizona	Tuba City	2.9E-5
Colorado	Durango	6.7E-5
	Grand Junction	3.1E-4
	Gunnison	7.5E-5
	Maybell	2.8E-5
	Naturita	1.4E-5
	New/Old Rifle	5.3E-5
	Slick Rock	2.2E-6
Idaho	Lowman	3.6E-6
New Mexico	Ambrosia Lake	6.5E-5
	Shiprock	3.0E-4
North Dakota	Bowman/Belfield	2.1E-6
Oregon	Lakeview	3.6E-5
Pennsylvania	Canonsburg	1.4E-3
Texas	Falls City	1.1E-3
Utah	Green River	3.3E-6
	Mexican Hat	5.7E-5
	Salt Lake City	4.9E-6
Total		3.5E-3

Table 8-12. Estimated distribution of the fatal cancer risk to the regional (0-80 km) populations from inactive uranium mill tailings disposal sites assuming a 2 $pCi/m^2/s$ radon flux limit.

Risk Interval	Number of Persons	Deaths/y
1E-1 to 1E+0	0	0
1E-2 to 1E-1	0	0
1E-3 to 1E-2	0	0
1E-4 to 1E-3	0	0
1E-5 to 1E-4	1,100	2E-4
1E-6 to 1E-5	7,500	3E-4
< 1E-6	5,000,000	3E-3
Totals	5,000,000	3E-3*

* Totals may not add due to independent rounding.

8.4 SUPPLEMENTARY CONTROL OPTIONS AND COSTS

Previous studies have examined the feasibility, effectiveness, and cost associated with various options for controlling releases of radioactive materials from uranium mill tailings (NRC80, EPA82, EPA83, EPA86b). These studies have concluded that long-term stabilization and control will be required to protect the public from the hazards associated with these tailings. The standards for long-term disposal established for these Title I sites under the UMTRCA provide for controls to prevent misuse of the tailings, protect water resources, and limit releases of radon-222 to the air. The UMTRCA standard established a design standard to limit long-term radon releases to an average flux not to exceed 20 $pCi/m^2/s$. As shown in Table 8-2, the DOE has approved cover designs ranging from 0.5 to 20 $pCi/m^2/s$.

Both active and passive controls to reduce radon-222 emissions from tailing are available. Active controls require that some institution, usually a government agency, take the responsibility for continuing oversight of the piles and for repairing to the control system when needed. Fencing, warning signs, periodic inspections and repairs, and restrictions on land use are active control measures that may be used by the oversight agency. Passive controls, on the other hand, are measures of sufficient permanence to require little or no active intervention. Passive controls include thick earth or rock covers, barriers (dikes) to protect against floods, burial below grade, and moving piles out of flood prone areas, or away from population centers. Of the two methods, active or institutional controls are not preferred for long-term control of radon-222 emissions, since institutional performance over a long period of time is not reliable.

8.4.1 Long-Term Control Options

Previous studies (see above) have identified a number of options to provide long-term control of radon-222 emissions from the tailings. These include earthen or synthetic covers, extraction of radium from the tailings, chemical fixation, and sintering. The following paragraphs give a brief summary of these options and provide the rationale for limiting the discussion of costs and effectiveness to earthen covers.

8.4.1.1 Earth Cover

Covering the dried tailings with dirt is an effective method for reducing radon-222 emissions (Ro84) and is already in use at inactive tailings impoundments. The depth of soil required for a given amount of control varies with the type of earth and radon-222 exhalation rate.

Earth covers decrease radon-222 emissions by retaining the radon-222 released from the tailings long enough so that a significant portion will decay in the cover. A rapid decrease in radon-222 emissions is initially achieved by applying almost any type of earth. The high-moisture content earths provide greater radon-222 emission reduction because of their smaller diffusion coefficient.

In practice, earthen cover designs must take into account uncertainties in the measured values of the specific cover materials used, the tailings to be covered, and predicted long-term values of equilibrium moisture content for the specific location. The uncertainty in predicting reductions in radon-222 flux increases rapidly as the radon-222 emission limit is reduced.

The cost of adding earth covers varies widely with the location of the tailings impoundment, its layout, availability of earth, the topography of the disposal site, its surroundings, and hauling distance. Another factor affecting costs of cover material is its ease of excavation. In general, the more difficult the excavation, the more elaborate and expensive the equipment and the higher the cost. The availability of materials such as gravel, dirt, and clay will also affect costs. If the necessary materials are not available locally, they must be purchased and/or hauled and costs could increase significantly.

8.4.1.2 Water Covers

Maintaining a water cover over the tailings reduces radon-222 emissions (EPA86b). The degree of radon-222 control increases with the depth of the water and decreases with the radium-226 content of the water. The diffusion coefficient of water is very low (about one thousandth that of a 9 percent moisture content soil) and water is thus an effective barrier for radon-222. In shallow areas, however, radon-222 release is increased by thermal gradients and wave motion, and emissions approach those of satur-

ated tailings. Increased radium-226 content in the water reduces its effectiveness in controlling radon-222 since it releases radon-222. For a water depth less than 1 meter, the radon flux is similar to saturated bare tailings.

Additional factors affecting the feasibility and/or effectiveness of water covers include the evaporation and precipitation rates at the site, pile construction and slope, the potential for groundwater contamination, and dike or dam stability.

Since the inactive tailings piles are currently dry and are located in arid and semi-arid parts of the country, water covers would require recontouring of the piles to contain the water and active controls to monitor and maintain the water levels. Active surveillance would also be needed to determine if there is any seepage through the dam or sides, and groundwater samples might be required periodically as a check for groundwater contamination from seepage. For these reasons, water covers are not suitable to provide long-term passive stabilization.

8.4.1.3 Synthetic Covers and Chemical Sprays

Synthetic material such as a polyethylene sheet can also reduce radon-222 emissions if carefully placed and sealed on dry tailings. The overall effectiveness of synthetic covers is not known since leaks occur around the edges and at seams and breaks. Synthetic covers also have a limited life, especially in dry, sunny, windy areas, and will not provide a long-term barrier to radon-222. Chemical stabilization sprays that form coatings on the dry tailings are effective for controlling dust, but are not effective in controlling radon-222 since an impermeable cover is not obtained. The lack of long-term stability of synthetic covers and the ineffectiveness of chemical sprays make these options unsuitable for long-term passive control.

8.4.1.4 Thermal Stabilization

Thermal stabilization is a process in which tailings are sintered at high temperatures. The Los Alamos National Laboratory has conducted a series of tests on tailings from four different inactive mill sites (Dr81). The results show that thermal stabilization is effective in preventing the release (emanation) of radon from tailings. However, before thermal stabilization can be considered as a practical disposal method, information is needed on the following: (1) the long-term stability of the sintered material; (2) the interactions of the tailings and the refractory materials lining the kiln; (3) the gaseous and particulate emissions produced during sintering of tailings; and (4) revised engineering and economic analysis as more information is developed. Since gamma radiation is still present, protection against the misuse of sintered tailings is required. While the potential health risk from external gamma radiation is not as great as that from the radon decay products, it can produce unacceptably high exposure levels in and around occupied buildings.

Also, the potential for groundwater contamination may require the use of liners in a disposal area.

Given the experimental nature of this option and the uncertainties involving the risk from external gamma radiation, thermal stabilization will not be considered further in this analysis.

8.4.1.5 Chemical Processing

The Los Alamos National Laboratory has also studied various chemical processes such as nitric acid leaching to extract thorium-230 and radium-226 from the tailings, along with other materials (Wm81). After removal from the tailings, the thorium and radium can be concentrated and fixed in a matrix such as asphalt or concrete. This greatly reduces the volume of these hazardous materials and allows disposal with a higher degree of isolation than economically achievable with unextracted tailings.

The major question regarding chemical extraction is whether it reduces the thorium and radium values in the stripped tailings to safe levels. If processing efficiencies of 80 to 90 percent were attained, radium concentrations in tailings would still be in the 30 to 60 pCi/g range. Thus, careful disposal of the stripped tailings would still be required to prevent misuse. Another disadvantage of chemical processing is the cost, although some of the costs might be recovered from the sale of other minerals recovered in the processing (Th81).

8.4.1.6 Soil Cement Covers

A mixture of soil and Portland cement, called soil cement, is widely used for stabilizing and conditioning soils (PC79). The aggregate sizes of tailings appear suitable for soil cement, which is relatively tough, withstands freeze/thaw cycles, and has a compressive strength of 300 to 800 psi. When combined in a disposal system with a 1-meter earth cover, soil (tailings) cement would likely provide reasonable resistance to erosion and intrusion, substantially reduce radon releases, and shield against penetrating radiation. A previous study (EPA82) has estimated, based upon design specifications, that soil cement cover will control emission to approximately the same level as a 2-meter earth cover. Costs are expected to be comparable to those of thick earth covers. The long-term performance of soil cement is unknown, especially as tailings piles shift or subside with age. Soil cement cracks at intervals when placed over large surface areas. The importance of this cracking on the effectiveness of soil cement has not been evaluated but is expected to be small.

8.4.1.7 Deep-Mine Disposal

Disposal of tailings in worked-out deep mines offers several advantages and disadvantages compared to surface disposal options. The probability of intrusion into and misuse of tailings in a deep mine is much less than in the case of surface disposal.

Radon releases to the atmosphere would be eliminated, for practical purposes, as would erosion and external radiation. The major disadvantage of deep mine disposal is the potential contamination of groundwater resulting from leaching of radionuclides and other toxic chemicals from the tailings. Overall, while this method can provide a relatively high level of protection against exposure to radon and misuse of tailings, it has a high potential for causing serious groundwater contamination and is very costly.

8.4.1.8 Caliche Cover

Caliche (calcium deposits that form within or on top of soil in arid or semi-arid regions) cover material for mill tailings pile has been suggested (Br81) as a control method. This material may be effective in precluding excessive mobilization of certain radionuclides and toxic elements. However, the effectiveness and long-term performance of such covers are not as yet known.

8.4.2 Comparison of Earth Covers to Other Control Techniques

In comparison to other control technologies, earth covers have been shown to be cost effective (NRC80). Apart from cost considerations, other benefits accrue by using earth covers as a method to control radon-222 emissions. For example, synthetic covers, such as plastic sheets, do not reduce gamma radiations. However, earth covers that are thick enough to reduce radon-222 emissions will reduce gamma radiation to insignificant levels. Further, chemical and physical stresses over a substantial period of time destabilize synthetic covers, while earthen covers are stable over the long run, provided the erosion caused by rain and wind is contained with vegetation or rock covers, and appropriate precautions are taken against natural catastrophes, e.g., floods and earthquakes.

Earthen covers also reduce the likelihood of groundwater contamination resulting from either storing radioactive materials in underground mines (typically located under the water table) or from using the leaching process to extract radioactive and non-radioactive contaminants from mill tailings. Moreover, although underground mine disposal is an effective method to protect against degradation and intrusion by man (this maintains the long-term stability of the cover), it nevertheless incurs a social cost. For example, storing tailings in underground mines eliminates the future development of the mines' residual resources. Again, earthen covers with proper vegetation and rock covers can protect against human intrusion, without incurring such social costs.

Finally, earth covers provide more effective long-term stabilization than either water or soil cement covers. Albeit, soil cement covers are comparable to earthen covers in terms of cost effectiveness, their long-term performance is as yet unknown. Water covers, on the other hand, do not provide the long-term stability required for the needed time periods, which are at

least 1,000 years. Moreover, earth covers are more practical than water covers in arid regions.

8.4.3 Cost Estimates for Inactive Tailings Impoundments

For the reasons described above, the supplemental control selected for long-term radon-222 control at inactive tailings impoundments is the earth cover control option. The cost estimates developed below are for covers designed to meet the lower of the DOE-approved cover design flux or the three alternative radon emission levels: 20 $pCi/m^2/s$ (the level established by the UMTRCA standard), 6 $pCi/m^2/s$, and 2 $pCi/m^2/s$. The basis for the effectiveness of various depths of cover and the unit costs used in this analysis are documented in Appendix B, Generic Unit Costs for Earth Cover Based Radon-222 Control Techniques.

The thicknesses of the covers required to achieve a given radon flux are a function of the soil type and the initial radon flux from the pile. In this assessment, soil type B (see Appendix B) is assumed. Table 8-13 presents the estimated radium content and base area for each pile and the estimated thickness of cover needed to achieve the lower of the DOE-approved design flux or the flux limit for each of the three cases.

Five basic steps or operations are required to place earthen covers on inactive tailings piles: regrading the slopes of the pile to achieve long-term stability; procurement and placing of the dirt cover; placing gravel on the pile tops; placing of riprap on the pile sides; and reclamation of the borrow pits.

The first step is to regrade the inactive tailings piles, as necessary, to prepare for the placement of the dirt cover. It is assumed that existing piles have a slope of 2:1, and that the placement of a dirt cover requires a slope no greater than 5:1 (EPA86b). The total cost for this operation is the product of the volume regraded and the unit cost of grading. The volumes to be regraded are based on the set of equations presented in Appendix B, and two additional assumptions about the geometric configuration of the piles. First, it is assumed that the length of each base side of the pile is the square root of the area of the pile. Second, it is assumed that the ratio between the height and base side lengths of the piles is equal to 40 feet of height per 2,100 feet in base side length. The unit cost of regrading is $1.36 per cubic yard.

The second step is the procurement and placement of the earthen cover. In the case of inactive tailings piles, it is assumed that dirt is available onsite at an average distance of one mile from the pile (two miles round trip). The cost of the dirt cover is a product of the volume required and unit costs for excavating (on trucks), hauling, spreading, and compacting. The volume is estimated by multiplying the surface area of the pile (including the sides) by the depth of cover required to meet each

Table 8-13. Estimated depths of earth cover needed to achieve given radon flux rates.[a]

State/Mill	Base Area of Pile (acres)	Estimated Radium Content (pCi/g)	DOE Cover Design Flux ($pCi/m^2/s$)	Cover Depth (meters)		
				Design Flux	6 $pCi/m^2/s$ Flux	2 $pCi/m^2/s$ Flux
Arizona						
Tuba City	22	550	9.3	4.4	4.8	6.0
Colorado						
Durango	40	670	20.0	3.7	5.0	6.2
Grand Junction	62	665	6.5	4.9	5.0	6.2
Gunnison	38	315	1.9	5.5	5.5	5.5
Maybell	80	200	7.1	3.6	3.7	4.9
Naturita	23	45	5.0	2.3	2.3	3.3
Rifle	71	745	20.0	3.9	5.1	6.3
Slick Rock	6	115	5.8	3.2	3.2	4.3
Idaho						
Lowman	5	160	5.7	3.6	3.6	4.7
New Mexico						
Ambrosia Lake	105	570	16.7	3.8	4.9	6.0
Shiprock	72	420	20.0	3.2	4.5	5.7
North Dakota						
Bowman/Belfield	12	50	3.9	2.7	2.7	3.4
Oregon						
Lakeview	30	110	7.5	2.9	3.1	4.3
Pennsylvania						
Canonsburg	18	2,315	7.0	6.2	6.4	7.5
Texas						
Falls City	146	190	13.2	2.8	3.7	4.9
Utah						
Green River	9	75	0.5	5.3	5.3	5.3
Mexican Hat	68	670	12.0	4.3	5.0	6.2
Salt Lake City	50	480	20.0	3.4	4.7	5.8

(a) Estimated cover depths based on the radium content of the pile and the lower of the DOE-approved cover design flux or the stated flux limit.

of the three alternative radon flux rates. The equations used to estimate surface areas, cover depths, and the total unit cost of $6.01 per cubic yard for excavation, hauling, spreading, and compacting are documented in Appendix B.

The third and fourth steps are erosion controls required to provide long-term stabilization, after the final earth cover has been put in place. The erosion control system is an essentially maintenance-free gravel and rock system designed for arid conditions. In this system, gravel is placed on the top of the pile, and riprap (random broken stone) is placed on the sides of the pile. The cost of each is a product of surface area, depth, and unit costs. The depth required for adequate erosion protection is assumed to be one-half yard (EPA86b). The equations used to calculate the relevant surface areas and the unit costs of $7.55 per cubic yard for gravel and $23.00 per cubic yard for rip-rap are documented in Appendix B.

The final operation is the reclamation of the borrow pits, from which the earthen cover is extracted. The costs of borrow pit reclamation is assumed to include regrading the sides of the pits from 2:1 to 8:1. Regrading of the pit is calculated using the same methodology as is used for estimating pile regrading. The volume of the pit is based on the volume of dirt required for cover. The ratio of height to base side length is the same as given above, as is the unit cost for grading.

Table 8-14 presents the calculated volumes and surface areas that were used in the development of the cost estimates. Tables 8-15, 8-16, and 8-17 summarize the costs of achieving the alternative levels of control. The total cost of achieving the DOE-approved cover fluxes under the UMTRCA limit of 20 $pCi/m^2/s$ at all sites is approximately $127 million. The estimated total costs at all sites for the 6 and 2 $pCi/m^2/s$ alternatives are approximately $147 and $176 million, respectively.

Three overhead cost factors are used in conjunction with the cost of earth cover described above. The first cost factor is 1.07, used to reflect overhead costs based on general industry experience. The second factor of 3.3 represents the DOE's project costs based its experience with the UMTRAP to date. The project cost factor of 3.3 includes the additional costs to the government of community participation, technology development and evaluation, site acquisition, costs for a planning contractor, management suppport, and design construction management and associated services. Since many of these project costs are sunk costs, a third cost factor of 2.4, is also provide. This alternative project cost factor is based only on future costs.

In numerous cases (see Table 8-1) piles have already been covered or are being covered under the UMTRCA design standard to the DOE-approved cover flux of 20 $pCi/m^2/s$ or less. The cost methodology, described above, assumes that no cover operations had been done previously on the individual piles. Thus, the

costs shown for achieving the UMTRCA limit includes the estimated costs for piles where the work has already been accomplished. Furthermore, in estimating the incremental costs of achieving the alternative limits of 6 and 2 pCi/m^2/s, no attempt has been made to include the costs of redesigning covers and/or removing and replacing existing erosion controls.

Table 8-14. Major volumes and surface areas used to calculate the costs to achieve given radon-222 flux rates.[a]

Mill	Volume of Tailings Regraded (m^3)	Total Area of Regraded Tailings (m^2)	Volume of Dirt Cover 20 pCi/m^2/s (m^3)	Volume of Dirt Cover 6 pCi/m^2/s (m^3)	Volume of Dirt Cover 2 pCi/m^2/s (m^3)
Tuba City	52,661	89,696	390,554	432,507	537,673
Durango	129,323	163,266	611,864	821,648	1,013,074
Grand Junction	249,410	252,962	1,249,416	1,271,025	1,567,617
Gunnison	119,863	155,204	846,533	846,533	846,533
Maybell	365,781	326,532	1,163,327	1,221,989	1,604,841
Naturita	58,167	95,843	224,748	224,748	318,473
New/Old Rifle	304,949	289,243	1,116,735	1,488,390	1,827,521
Slick Rock	7,513	24,490	78,072	78,072	105,900
Lowman	5,694	20,358	72,452	72,452	95,207
Ambrosia Lake	549,525	428,322	1,613,738	2,081,669	2,583,866
Shiprock	311,346	293,274	952,914	1,329,748	1,673,606
Bowman/Belfield	21,250	48,980	133,351	133,351	168,260
Lakeview	83,480	121,946	349,514	378,555	521,533
Canonsburg	38,958	73,369	454,250	466,320	552,344
Falls City	901,125	595,619	1,695,198	2,196,394	2,894,744
Green River	13,774	36,684	196,171	196,171	196,171
Mexican Hat	9,045	27,715	118,975	139,477	171,972
Salt Lake	178,730	202,571	687,066	947,354	1,184,864

(a) Volumes calculated to achieve the lower of the stated flux or the DOE-approved design flux (see Table 8-2).

Table 8-15. Estimated costs of achieving the UMTRCA limit of 20 pCi/m^2/s.[a]

(Millions of 1988 Dollars)

Mill	Regrade Slopes	Apply Dirt Cover	Apply Riprap	Apply Gravel	Reclaim Borrow Pits	Total Cost	Total Cost Including 1.07 DOE Cost Factor	Total Cost Including 2.4 DOE Cost Factor	Total Cost Including 3.3 DOE Cost Factor
Tuba City	0.09	3.07	0.41	0.20	0.15	3.93	4.20	9.42	12.96
Durango	0.23	4.81	0.75	0.37	0.23	6.39	6.84	15.34	21.09
Grand Junction	0.44	9.82	1.16	0.57	0.48	12.47	13.35	29.94	41.16
Gunnison	0.21	6.65	0.71	0.35	0.32	8.25	8.83	19.81	27.23
Maybell	0.65	9.14	1.50	0.74	0.45	12.48	13.35	29.94	41.17
Naturita	0.10	1.77	0.44	0.22	0.09	2.61	2.80	6.27	8.62
New/OldRifle	0.54	8.77	1.33	0.66	0.43	11.73	12.55	28.15	38.70
Slick Rock	0.01	0.61	0.11	0.06	0.03	0.82	0.88	1.98	2.72
Lowman	0.01	0.57	0.09	0.05	0.03	0.75	0.80	1.79	2.46
Ambrosia Lake	0.98	12.68	1.97	0.97	0.62	17.21	18.42	41.31	56.80
Shiprock	0.55	7.49	1.35	0.67	0.37	10.42	11.15	25.00	34.38
Bowman/Belfield	0.04	1.05	0.22	0.11	0.05	1.47	1.58	3.53	4.86
Lakeview	0.15	2.75	0.56	0.28	0.13	3.86	4.14	9.28	12.75
Canonsburg	0.07	3.57	0.34	0.17	0.17	4.32	4.62	10.36	14.24
Falls City	1.60	13.32	2.74	1.35	0.65	19.66	21.03	47.17	64.86
Green River	0.02	1.54	0.17	0.08	0.08	1.89	2.02	4.54	6.25
Mexican Hat	0.02	0.93	0.13	0.06	0.05	1.19	1.27	2.85	3.92
Salt Lake City	0.32	5.40	0.93	0.46	0.26	7.37	7.88	17.68	24.32
Totals	6.05	93.92	14.91	7.36	4.58	126.81	135.69	304.35	418.49

(a) Based on costs of achieving the lower of the DOE-approved cover design flux or the UMTRCA limit of 20 pCi/m^2/s.

Table 8-16. Estimated costs of achieving an average limit of 6 pCi/m^2/s.[a]

(Millions of 1988 Dollars)

Mill	Regrade Slopes	Apply Dirt Cover	Apply Riprap	Apply Gravel	Reclaim Borrow Pits	Total Cost	Total Cost Including 1.07 DOE Cost Factor	Total Cost Including 2.4 DOE Cost Factor	Total Cost Including 3.3 DOE Cost Factor
Tuba City	0.09	3.40	0.41	0.20	0.17	4.27	4.57	10.25	14.10
Durango	0.23	6.46	0.75	0.37	0.31	8.12	8.69	19.49	26.80
Grand Junction	0.44	9.99	1.16	0.57	0.49	12.65	13.54	30.36	41.75
Gunnison	0.21	6.65	0.71	0.35	0.32	8.25	8.83	19.81	27.23
Maybell	0.65	9.60	1.50	0.74	0.47	12.96	13.87	31.10	42.76
Naturita	0.10	1.77	0.44	0.22	0.09	2.61	2.80	6.27	8.62
New/Old Rifle	0.54	11.69	1.33	0.66	0.57	14.79	15.83	35.50	48.81
Slick Rock	0.01	0.61	0.11	0.06	0.03	0.82	0.88	1.98	2.72
Lowman	0.01	0.57	0.09	0.05	0.03	0.75	0.80	1.79	2.46
Ambrosia Lake	0.98	16.35	1.97	0.97	0.80	21.07	22.54	50.56	69.52
Shiprock	0.55	10.45	1.35	0.67	0.51	13.52	14.47	32.45	44.62
Bowman/Belfield	0.04	1.05	0.22	0.11	0.05	1.47	1.58	3.53	4.86
Lakeview	0.15	2.97	0.56	0.28	0.15	4.10	4.39	9.85	13.54
Canonsburg	0.07	3.66	0.34	0.17	0.18	4.41	4.72	10.60	14.57
Falls City	1.60	17.26	2.74	1.35	0.84	23.78	25.45	57.08	78.49
Green River	0.02	1.54	0.17	0.08	0.08	1.89	2.02	4.54	6.25
Mexican Hat	0.02	1.10	0.13	0.06	0.05	1.36	1.45	3.25	4.47
Salt Lake City	0.32	7.44	0.93	0.46	0.36	9.51	10.18	22.83	31.39
Totals	6.05	112.55	14.91	7.36	5.49	146.35	156.60	351.25	482.97

(a) Based on costs of achieving the lower of the DOE-approved cover design flux or the UMTRCA limit of 6 pCi/m^2/s.

Table 8-17. Estimated costs of achieving an average limit of 2 pCi/m^2/s.[a]

(Millions of 1988 Dollars)

Mill	Regrade Slopes	Apply Dirt Cover	Apply Riprap	Apply Gravel	Reclaim Borrow Pits	Total Cost	Total Cost Including 1.07 DOE Cost Factor	Total Cost Including 2.4 DOE Cost Factor	Total Cost Including 3.3 DOE Cost Factor
Tuba City	0.09	4.22	0.41	0.20	0.21	5.14	5.50	12.33	16.96
Durango	0.23	7.96	0.75	0.37	0.39	9.70	10.38	23.27	32.00
Grand Junction	0.44	12.32	1.16	0.57	0.60	15.09	16.15	36.23	49.81
Gunnison	0.21	6.65	0.71	0.35	0.32	8.25	8.83	19.81	27.23
Maybell	0.65	12.61	1.50	0.74	0.61	16.11	17.24	38.67	53.17
Naturita	0.10	2.50	0.44	0.22	0.12	3.38	3.62	8.12	11.17
New/Old Rifle	0.54	14.36	1.33	0.66	0.70	17.58	18.81	42.20	58.03
Slick Rock	0.01	0.83	0.11	0.06	0.04	1.05	1.13	2.53	3.48
Lowman	0.01	0.75	0.09	0.05	0.04	0.93	1.00	2.24	3.08
Ambrosia Lake	0.98	20.30	1.97	0.97	0.99	25.20	26.97	60.49	83.18
Shiprock	0.55	13.15	1.35	0.67	0.64	16.35	17.50	39.25	53.97
Bowman/Belfield	0.04	1.32	0.22	0.11	0.06	1.76	1.88	4.22	5.81
Lakeview	0.15	4.10	0.56	0.28	0.20	5.28	5.65	12.68	17.43
Canonsburg	0.07	4.34	0.34	0.17	0.21	5.12	5.48	12.30	16.91
Falls City	1.60	22.74	2.74	1.35	1.11	29.54	31.61	70.89	97.48
Green River	0.02	1.54	0.17	0.08	0.08	1.89	2.02	4.54	6.25
Mexican Hat	0.02	1.35	0.13	0.06	0.07	1.62	1.74	3.90	5.36
Salt Lake City	0.32	9.31	0.93	0.46	0.45	11.47	12.27	27.53	37.85
Totals	6.05	140.34	14.91	7.36	6.85	175.50	187.79	421.21	579.16

(a) Based on costs of achieving the lower of the DOE-approved cover design flux or the UMTRCA limit of 2 pCi/m^2/s.

8.4.4 Effectiveness of the Control Options

The effectiveness of the various cover options can be evaluated by comparing the current average flux rate with the flux rates achieved by each of the options. The emission of radon-222 from the inactive tailings sites once UMTRCA disposal is achieved is estimated to be about 1,300 curies per year. Given the total areas of the disposal sites, approximately 857 acres, this is equivalent to an average post-UMTRCA flux of 12 $pCi/m^2/s$. The post-UMTRCA emissions are estimated to result in 2E-2 deaths per year in the regional populations; reducing the emission limit to 6 $pCi/m^2/s$ would lower the deaths per year in the regional population to 1E-2 (see Table 8-8). Similarly, reducing the average radon flux to 2 $pCi/m^2/s$ would reduce the deaths per year in the regional populations to 3E-3.

8.5 REFERENCES

Br81 Brookins, P.G., "Caliche-Cover for Stabilization of Abandoned Mill Tailings," in Proceedings of the Fourth Symposium on Uranium Mill Tailings Management, Fort Collins, Colorado, October 26-27, 1981, Geotechnical Engineering Program, Civil Engineering Department, Colorado State University, 1981.

DOE88 U.S. Department of Energy, "Annual Status Report on the Uranium Mill Tailings Remedial Action Program," Washington, D.C., December 1988.

Dr81 Dreesen, D.R., Williams, J.M., and Cokal, E.J., "Thermal Stabilization of Uranium Mill Tailings," in Proceedings of the Fourth Symposium on Uranium Mill Tailings Management, Fort Collins, CO, October 1981.

EPA82 U.S. Environmental Protection Agency, "Final Environmental Impact Statement for Remedial Action Standards for Inactive Uranium Processing Sites (40 CFR 192)," Vol.I, EPA 520/4-82-013-1, Office of Radiation Programs, Washington, D.C., October 1982.

EPA83 U.S. Environmental Protection Agency, "Final Environmental Impact Statement for Standards for the Control of By-Product Materials from Uranium Ore Processing (40 CFR 192)," Vol.I, EPA 520/1-83-008-1, Office of Radiation Programs, Washington, D.C. 1983

EPA86a U.S. Environmental Protection Agency, "Radon Flux Measurements on Gardinier and Royster Phosphogypsum Piles Near Tampa and Mulberry, Florida," EPA 520/5-85-029, Office of Radiation Programs, Washington, DC, January 1986.

EPA86b U.S. Environmental Protection Agency, "Final Rule for Radon-222 Emissions from Licensed Uranium Mill Tailings," EPA 520/1-86-009, Office of Radiation Programs, Washington, D.C., August 1986.

NRC80 U.S. Nuclear Regulatory Commission, "Final Generic Environmental Impact Statement on Uranium Milling," NUREG-0706, Washington D.C., September 1980.

PC79 Portland Cement Association, "Soil-Cement Construction Handbook," EB003.095, Skokie, Il, 1979.

PNL84 Pacific Northwest Laboratory. "Estimated Population Near Uranium Tailings," PNL-4959, WC-70, Richland, WA, January 1984.

Ro84 Rogers, V.C., Neilson, K.K., and Kalkwarf, D.R., "Radon Attenuation Handbook for Uranium Mill Tailings Cover Design," NUREG/CR-3533, prepared for the U.S. Nuclear Regulatory Commission, Washington, D.C., April 1984.

Sh85 Shiager, K.J., "Disposal of Uranium Mill Tailings," presented at the NCRP annual meeting, April 1985.

Th81 Thode, E.F., and Dreesen, D.R., "Technico-Economic Analysis of Uranium Mill Tailings Conditioning Alternatives," in Proceedings of the Fourth Symposium on Uranium Mill Tailings Management, Fort Collins, CO, October 1981.

Wm81 Williams, J.M., Cokal, E.J., and Dreesen, D.R., "Removal of Radioactivity and Mineral Values from Uranium Mill Tailings," in Proceedings of the Fourth Symposium on Uranium Mill Tailings Management, Fort Collins, CO, October 1981.

9. LICENSED URANIUM MILL TAILINGS FACILITIES

9.1 DESCRIPTION OF LICENSED URANIUM MILL TAILINGS

The licensed uranium mill tailings source category comprises the tailings impoundments and evaporation ponds created by conventional acid or alkaline leach processes at uranium mills licensed by the Nuclear Regulatory Commission (NRC) or the Agreement States. Recovery of uranium by conventional milling results in the release of uranium and its decay products to the air. The risks associated with the release of uranium and other radionuclides in the form of particulates are addressed in the Uranium Fuel Cycle source category (see Chapter 4). This assessment addresses only radon-222 released from the tailings impoundments and their associated evaporation ponds. Previous evaluations have shown that radon releases from other milling operations are insignificant (NRC80, EPA83, EPA86).

9.1.1 Rulemaking History and Applicable Standards

On January 13, 1977, the EPA issued Environmental Protection Standards for Nuclear Power Operations (40 CFR 190). These standards limit the total individual radiation dose during normal operations from uranium fuel cycle facilities, including licensed uranium mills. However, when 40 CFR 190 was promulgated, considerable uncertainty existed regarding the public health risk from radon-222 and the best method for managing new man-made sources of this radionuclide. Therefore, the doses caused by emission of radon-222 were excluded from the limits established in 40 CFR 190.

On April 6, 1983, the Agency proposed National Emission Standards for Hazardous Air Pollutants (NESHAPS) for radionuclides under Section 112 of the Clean Air Act (CAA). At that time, it determined that uranium fuel cycle facilities should be exempted from the NESHAP for NRC-Licensed Facilities since they were already subject to the dose limits of 40 CFR 190. During the comment period, it was noted that radon-222 emissions from operating uranium mills could pose significant public health risks, and that such emissions were not subject to any current or proposed EPA standards.

On September 30, 1983, under the authority of the Uranium Mill Tailings Radiation Control Act (UMTRCA), the Agency issued final standards (40 CFR 192) for the management of mill tailings at licensed facilities. Although the UMTRCA standard requires procedures to maintain radon-222 emission as low as reasonably achievable (ALARA) during operations, it does not impose a numerical limit on radon-222 emissions until after closure of a facility. Current NRC regulation imposes a concentration limit at the boundary. After closure, the tailings must be disposed of in accordance with the standard and the post-disposal radon-222 emission rate cannot exceed an average of 20 $pCi/m^2/s$. At the time the UMTRCA standard was promulgated, taking into account the com-

ments received during the radionuclide NESHAPS rulemaking, the Agency stated that it would issue a Notice of Proposed Rulemaking (under Section 112 of the CAA) with respect to control of radon-222 emissions from uranium tailings piles during the operational period of a uranium mill. This notice was published on October 31, 1984.

On September 24, 1986, the Agency promulgated a NESHAP (40 CFR 61, Subpart W) for radon-222 emissions from licensed uranium mills during operations. The NESHAP imposes a work practice standard of either phased or continuous disposal on all new tailings impoundments and prohibits the use of existing tailings piles after December 31, 1992.

9.1.2 Industry Profile

In December of 1988, the conventional uranium milling industry in the United States consisted of 26 licensed facilities. Three other mills have been licensed, but two never were constructed and one was built but never operated. The licensed conventional uranium mills that have operated are in Colorado, New Mexico, South Dakota, Texas, Utah, Washington, and Wyoming. Currently, 4 of the 26 licensed facilities are operating; 8 are on standby status; and 14 are being or have been decommissioned. The mills on standby status are being maintained, but they are not processing uranium ore. When the demand for uranium increases, these standby mills could resume milling. At the 14 facilities where decommissioning is in progress or completed, the mills have been or are being dismantled; therefore these facilities will never resume operations. The tailings at these 14 facilities have either been stabilized and reclaimed in conformance with the UMTRCA requirements or reclamation activities are underway. The operational status of each conventional licensed mill and the current extent of tailings reclamation are shown in Table 9-1.

9.1.3 Process Description

Recovery of uranium by conventional milling methods is described in Chapter 4, Section 4.2.2. Since the uranium ores typically contain only 0.05 to 0.5 percent uranium, virtually all of the ore input to the mill remains as waste which is disposed of in the tailings impoundment. The tailings wastes from the mill are discharged into an impoundment. Impoundment technology has changed with time. At older facilities, the pond areas were generally formed from dikes built with tailings sands or from soil and rock from the pond area. As the pond is filled, the dikes are raised with mill tailings sands. This practice is discouraged but continues at some of the sites. At newer facilities, the impoundment dikes were engineered and constructed with either natural clay and/or man-made synthetic liners. The tailings discharged to these impoundments are almost entirely covered by the tailings pond.

Table 9-1. Operating status of licensed conventional uranium mills as of June 1989.[a]

State/Mill	Owner	Operating Status[b]	Reclamation Status[c]
Colorado			
Canon City	Cotter Corp.	Standby	Future
Uravan	Umetco Minerals	Standby	In Progress[d]
New Mexico			
L-Bar	BP American	Decommission	Cover in Place
Churchrock	United Nuclear	Decommission	In Progress
Bluewater	Anaconda	Decommission	In Progress
Ambrosia Lake	Kerr-McGee	Standby	In Progress[e]
Homestake	Homestake	Active	Future[f]
South Dakota			
Edgemont	TVA	Decommission	Completed
Texas			
Panna Maria	Chevron	Active	Future
Conquista	Conoco/Pioneer	Decommission	In Progress
Ray Point	Exxon	Decommission	Completed
Utah			
White Mesa	Umetco Minerals	Active	Future
Rio Algom	Rio Algom	Standby	In Progress[g]
Moab	Atlas	Decommission	In Progress
Shootaring	Plateau Resources	Standby	Future
Washington			
Dawn	Dawn Mining	Decommission	In Progress
Sherwood	Western Nuclear	Standby	Future
Wyoming			
Lucky Mc	Pathfinder	Standby	Future
Split Rock	Western Nuclear	Decommission	In Progress
Umetco	Umetco Minerals	Decommission	In Progress
Bear Creek	Rocky Mt. Energy	Decommission	In Progress
Shirley Basin	Pathfinder	Active	Future
Sweetwater	Minerals Expl.	Standby	Future
Highland	Exxon	Decommission	Cover in Place
FAP	American Nuclear Corporation	Decommission	Unknown
Petrotomics	Petrotomics	Decommission	Design Approval Pending

Table 9-1. Operating status of licensed conventional uranium mills as of June 1989.[a] (continued)

(a) Data obtained from conversations with cognizant personnel in Agreement States and the NRC, comments submitted by individual companies and the American Mining Congress during the public comment period, and site visits. Does not include mills licensed but not constructed.

(b) Active mills are currently processing ore and producing yellowcake. Standby mills are not currently processing ore but are capable of restarting. At mills designated by "Decommission", the mill structure has been or is being dismantled and no future milling will occur at the site.

(c) Reclamation to the UMTRCA requirements is in various stages of completion, creating a dynamic situation. The terms used to describe the reclamation status are as follows: "Future" mean that the impoundment is being maintained to accept additional tailings and that reclamation activities have not been started; "Design Approval Pending" means that the final disposal design has been submitted for regulatory approval and that preliminary reclamation activities are underway; "In Progress" means that active reclamation has begun, but the final cover is not completed; "Cover in Place" designates that the final earthen cover has been completed, but final stabilization has not been completed; and "Completed" means that disposal and stabilization have been accomplished in accordance with the UMTRCA requirements.

(d) According to UMETCO, the mill is being held on standby but the entire impoundment area is being reclaimed. Thus, if future milling is done at this facility a new impoundment will have to be constructed. For the purposes of this analysis, the facility is grouped with other decommissioning mills.

(e) The main impoundment, which is filled, and the unlined evaporation ponds are being reclaimed. The secondary impoundment and lined evaporation ponds are being maintained to accept future tailings.

(f) The inactive impoundment containing tailings generated for the AEC is covered with several feet of soil.

(g) The upper impoundment, which is filled, is being reclaimed. The lower impoundment is being maintained to accept future tailings.

9.1.4 Existing Emission Controls

During the operating period of the mill, radon releases from the tailings are required to be maintained ALARA. The addition of wet tailings provides a water cover which reduces the radon emissions. The beaches are sprayed to prevent wind erosion and control the radon. During operations and standby periods an interim cover can be placed on portions or all of the tailings pile to reduce radon and wind erosion before final reclamation. At the end of the operating period, the tailings pond is dewatered and the spraying of water on the beaches is discontinued. This is done so that the tailings can dry sufficiently to provide a stable base for the heavy equipment needed to regrade the impoundment and place the earthen covers required to meet the long-term disposal criteria of the UMTRCA standard.

9.2 BASIS OF THE EXPOSURE AND RISK ASSESSMENT

The evaluation of the exposures and risks caused by emissions of radon from licensed conventional uranium mills involves three distinct assessments: the risks that result from the continued use of existing impoundments at the 11 facilities that are operating or on standby; the risks that will occur once all existing piles are disposed of; and the risks that will result from future tailings impoundments. As was done in the 1986 NESHAPS rulemaking for this source category, the exposures and risks for existing impoundments are assessed on a site-by-site basis, while risks from future impoundments are assessed using model impoundments to represent the alternative technologies. The following sections explain the basis for the assessments of existing sites, while the emissions and risks estimated for future impoundments are discussed in Section 9.4.2.

9.2.1 Assessment of Risks from Operating and Standby Mills

The overall risk from operating and standby mills includes the risks that result from emissions during the operating or standby phase, the drying out and disposal phase, and the post-disposal phase. The following sub-sections detail how the radon release rates were developed for each of these three phases to obtain the source terms for the 11 operating and standby mills. The sources of the meteorological and demographic data used in the assessment are also discussed. Detailed information on the inputs to the assessment codes is presented in Appendix A.

9.2.1.1 Development of the Radon Source Terms

Measured radon-222 release rates are not available for all of the licensed tailings piles. Therefore, the radon source terms are estimated for each phase based on the radon flux rate per unit area and the area of the tailings. This assessment uses the same basic methodology for estimating the radon releases and the radon source terms that was used in the 1986 NESHAPS rulemakings (EPA86). For each phase, the methodology involves three

estimates: the radon flux per unit area, the fluxing area of the tailings pile, and the duration, in years, of the phase.

For both the operating or standby phase and the drying and disposal phase, the radon flux per unit area is calculated on the assumption that 1 $pCi/m^2/s$ radon-222 is emitted per pCi/g radium-226 in the tailings. While the EPA recognizes that this number could be lower because of moisture and other factors, the conservative value was used due to the lack of site-specific measured values. In the calculations of the specific flux rates, the radium concentrations of the tailings used are those reported in previous studies by the EPA and the NRC (EPA83, NRC80) or updated values provided by the industry during the public comment period (see Appendix A). For the post-disposal phase, the assumed radon flux per unit area is the design flux of the approved cover, if known, or the 20 $pCi/m^2/s$ (2 $pCi/m^2/s$ for facilities in Colorado) limit established by the regulatory authorities responsible for the implementation of the UMTRCA disposal standard.

Since water and dirt covers effectively attenuate radon, during the operating or standby phase the calculated radon flux rates are applied only to the dry areas of the operable pile and any associated evaporation ponds. The areas of the piles that are ponded, wet, covered with dirt, and dry have been updated from information obtained during the public comment period. Where no new information was provided, the areas were estimated from aerial photographs taken of each pile in 1986.

During the drying and disposal phase the calculated radon flux rates are applied to the total areas of the impoundment and any associated evaporation ponds. This could lead to an overestimation of the radon releases during this period since cover operations can proceed while the the piles are drying. For the post-disposal phase, the radon flux is applied only to the area of the impoundment. The areas of any associated evaporation ponds are not included since the radium contamination in these ponds is removed and transferred to the main impoundment prior to stabilization.

The total areas of the piles, along with the areas that are estimated to be non-fluxing (ponded, wet, or covered) and fluxing (dry) and the radium concentrations in the tailings are shown in Table 9-2.

To obtain the radon source term for each facility, it was necessary to define the duration of each of the three phases. The operating or standby phase is defined to be fifteen years. While it is recognized that some of the impoundments do not have 15 years of capacity remaining at full production, the limited processing that is now occurring makes it possible that these impoundments could remain operational for that length of time. The drying out disposal period is defined to require five years, based on industry and DOE experience to date. Finally, the post-disposal period is defined as fifty years. Total emissions were

Table 9-2. Summary of operable tailings impoundment areas and radium-226 content at operating and standby mills.

State/Impoundment	Surface Area (acres) Total	Covered	Ponded	Wet	Dry	Average Ra-226 (pCi/g)
Colorado						
Canon City - Primary	90	0	88	2	0	400
Canon City - Secondary	40	0	40	0	0	400
Canon City - Total	130	0	128	2	0	400
New Mexico						
Ambrosia Lake - Secondary	121	13	0	0	108	237
Ambrosia Lake - Evap. Ponds	280	0	162	0	118	22
Ambrosia Lake - Total	401	13	162	0	226	87
Homestake - Primary	170	0	100	0	70	300
Homestake - Secondary	40	40	0	0	0	300
Homestake - Total	210	40	100	0	70	300*
Texas						
Panna Maria	160	80	40	40	0	198
Utah						
White Mesa	130	0	55	70	5	981
Rio Algom - Lower	47	0	18	29	0	420
Shootaring	7	0	2	1	4	280
Washington						
Sherwood	80	0	0	40	40	200
Wyoming						
Lucky Mc - Pile 1-3	203	108	35	0	60	220
Lucky Mc - Evap. Ponds	104	0	104	0	0	22
Lucky Mc - Total	307	108	139	0	60	153
Shirley Basin	275	0	179	36	60	208
Sweetwater	37	0	30	0	7	280
Totals	1,784	241	853	218	472	--

* The sand and slime fractions of the tailings are separated by a mobile cyclone, and the exposed sands average 65 pCi/g Ra-226.

estimated by simply summing the estimated emissions for each period. The total was then divided by 70 to obtain the average release per year for input to the assessment codes. The radon source terms calculated for each pile are given in Table 9-3.

9.2.1.2 Sources of Demographic and Meteorological Data

Site-specific demographic data were used in assessing the exposures and risks that result from the release of radon from operable mills. Demographic data for the nearby individuals (0-5 km) were developed for each site by site visits made during late 1983 (PNL84). These data were verified and or updated for the mills that were estimated to have the highest post-disposal risks in the draft assessment (see Appendix A). The results of these surveys for all 26 licensed facilities are shown in Table 9-5. The population data between 5-80 km were generated using the computer code SECPOP. Meteorological data were obtained from on-site meteorological towers where available or from the nearest meteorological station with suitable joint-frequency data.

9.2.2 Assessment of the Post-Disposal Risks

The UMTRCA rule-making (40 CFR 192) established requirements for the long-term stabilization and disposal of uranium mill tailings. In addition to protection of groundwater and long-term isolation to prevent misuse of tailings, the UMTRCA standards require that the tailings cover be designed to limit the radon flux through the cover to 20 $pCi/m^2/s$ or less. The NRC and the Agreement States, which are responsible for implementing the UMTRCA requirements at licensed facilities, require licensees to demonstrate that the cover designs will achieve the 20 $pCi/m^2/s$ at the end of 1,000 years.

9.2.2.1 Development of the Radon Source Terms

As was done for the assessment of Inactive Tailings (see Chapter 8), the post-disposal source terms for each of the sites was estimated on the basis of the area of the tailings impoundment(s) and the design flux or measured performance of the cover. Where information on the design flux or performance of the cover was unavailable, the UMTRCA limit of 20 $pCi/m^2/s$ (2 $pCi/m^2/s$ for facilities in Colorado) was used. Table 9-4 summarizes the areas, radon flux rates through the covers, and estimated annual emissions for each of the 26 licensed facilities once disposal is complete.

9.2.2.2 Sources of Demographic and Meteorological Data

The demographic and meteorological data used to assess the post-UMTRCA disposal risks were obtained in the same manner as those used in the assessment risks from operable and standby impoundments. Table 9-5 summarizes the 0-5 kilometer populations around each of the sites.

Table 9-3. Summary of radon source terms calculated for operable mill tailings impoundments.

State/Impoundment	Radon Emissions				
	Operating/ Standby Phase (Ci/y)	Drying/ Disposal Phase (Ci/y)	Post-Disposal Phase (Ci/y)	Total Over All Phases (Ci)	Average Over All Phases (Ci/y)
Colorado					
Canon City	0.0E+0	6.6E+3	3.3E+1	3.5E+4	5.0E+2
New Mexico					
Ambrosia Lake	2.5E+3	4.4E+3	9.4E+2	1.1E+5	1.5E+3
Homestake	5.8E+2*	8.0E+3	5.4E+2	7.6E+4	1.1E+3
Texas					
Panna Maria	0.0E+0	4.0E+3	4.1E+2	4.1E+4	5.8E+2
Utah					
White Mesa	6.3E+2	1.6E+4	1.2E+2	9.7E+4	1.4E+3
Rio Algom	0.0E+0	5.0E+3	2.4E+2	3.7E+4	5.3E+2
Shootaring	1.4E+2	2.5E+2	1.8E+1	4.3E+3	6.1E+1
Washington					
Sherwood	1.0E+3	2.0E+3	2.0E+2	3.6E+4	5.1E+2
Wyoming					
Lucky Mc	1.2E+3	6.0E+3	5.2E+2	7.3E+4	1.0E+3
Shirley Basin	1.6E+3	7.3E+3	7.0E+2	9.6E+4	1.4E+3
Sweetwater	2.5E+2	1.3E+3	9.5E+1	1.5E+4	2.2E+2

* The source term for the operating/standby phase is based on the reported 65 pCi/g Ra-226 in the exposed sand fraction of the tailings. The average Ra-226 content of 300 pCi/g is used to calculate the source term for the drying/disposal phase, since once the water from the pond is decanted both the sands and slimes will be exposed and drying.

Table 9-4. Summary of uranium mill tailings impoundment areas, flux rates, and post-UMTRCA radon-222 release rates.

Owner/Impoundment	Surface Area (acres)	Radon Flux Rate ($pCi/m^2/s$)	Radon-222 Release Rate (Ci/y)
Colorado			
Canon City	130	2	3.3E+1
Uravan	70	2	1.8E+1
New Mexico			
L-Bar	128	20	3.3E+2
Churchrock	100	20	2.6E+2
Bluewater	305	20	7.8E+2
Ambrosia Lake	368	20	9.4E+2
Homestake	210	20	5.4E+2
South Dakota			
Edgemont	123	20	3.1E+2
Texas			
Panna Maria	160	20	4.1E+2
Conquista	240	20	6.1E+2
Ray Point	47	20	1.2E+2
Utah			
White Mesa	130	7	1.2E+2
Rio Algom	93	20	2.4E+2
Moab	147	20	3.8E+2
Shootaring	7	20	1.8E+1
Washington			
Dawn	128	10	1.6E+2
Sherwood	80	20	2.0E+2
Wyoming			
Lucky Mc	220	20	5.2E+2
Split Rock	156	20	4.0E+2
Umetco	218	20	5.6E+2
Bear Creek	90	20	2.3E+2
Shirley Basin	275	20	7.0E+2
Sweetwater	37	20	9.5E+1
Highland	200	20	5.1E+2
FAP	117	20	3.0E+2
Petrotomics	140	20	3.6E+2

Table 9-5. Estimated number of persons living within 5 km of the centroid of tailings impoundments of licensed mills.[a]

State/Impoundment	Distance (kilometers) 0.0-0.5	0.5-1.0	1.0-2.0	2.0-3.0	3.0-4.0	4.0-5.0	Total
Colorado							
Canon City*	0	0	0	184	2,767	2,982	5,933
Uravan*	0	0	0	0	0	0	0
New Mexico							
L-Bar	0	0	0	0	42	124	166
Churchrock*	0	0	18	52	51	150	271
Bluewater*	0	0	0	25	220	294	539
Ambrosia Lake*	0	0	0	0	0	0	0
Homestake*	0	0	187	104	42	57	390
South Dakota							
Edgemont	0	0	0	0	286	1,182	1,468
Texas							
Panna Maria	0	12	42	33	81	285	453
Conquista	0	0	3	12	9	18	42
Ray Point	0	0	21	21	30	58	130
Utah							
White Mesa	0	0	0	0	0	8	8
Rio Algom*	0	0	0	0	0	40	40
Moab	0	0	9	33	1,094	1,225	2,361
Shootaring	0	0	0	0	0	171	171
Washington							
Dawn*	0	3	93	157	96	62	411
Sherwood*	0	0	0	0	32	17	49
Wyoming							
Lucky Mc	0	0	0	0	0	0	0
Split Rock*	0	0	0	30	75	40	145
Umetco	0	0	0	0	0	0	0
Bear Creek	0	0	0	0	0	0	0
Shirley Basin	0	0	0	0	0	0	0
Sweetwater	0	0	0	0	0	0	0
Highland	0	0	0	0	6	0	6
FAP	0	0	0	0	0	0	0
Petrotomics	0	0	0	0	96	0	96
Total	0	15	373	651	4,927	6,713	12,679

(a) Based on information developed by Pacific Northwest Laboratory during 1983 (PNL84). At facilities marked with an asterisk the data were verified and updated as necessary during site visits made in 1989.

9.3 RESULTS OF THE RISK ASSESSMENTS FOR LICENSED MILLS

9.3.1 Exposures and Risks from Operating and Standby Mills

The estimates of the risks to nearby individuals and the deaths/year caused by operable and standby mills are substantially lower than previous estimates. The differences are due to several factors including:

- the elimination from the assessment of the licensed mills that are decommissioning, reflecting the fact that disposal of tailings is progressing under the UMTRCA standards and that the regulatory authorities responsible for implementing those standards are requiring closure activities once the impoundments are filled and/or the mill itself is dismantled;

- the updated demographic data which show significantly fewer people in the immediate vicinity of these mills; and

- updated information on mill characteristics including average radium content, partial reclamation activities, and additional information on the interim covers that have been placed at some mills which allows radon reduction credit to be given due to their thickness and/or moisture content.

These changes, along with changes in the meteorological data (including correction of day/nite data sets inadvertently used in the draft assessment) are detailed in Appendix A.

9.3.1.1 Exposures and Risks to Nearby Individuals

The AIRDOS-EPA and DARTAB model codes were used to estimate the increased chance of lung cancer for individuals living near an operable or standby tailings impoundment and receiving the maximum exposure. The results for exposure to the average emissions from all phases, in terms of radon concentration (pCi/l), exposure (WL), and lifetime fatal cancer risk are shown in Table 9-6. Table 9-6 also presents the lifetime fatal cancer risks that are attributable to the 15 year operating or standby period. The lifetime fatal cancer risks from all phases for individuals residing near these mill sites range from 4E-4 to 5E-6. The maximum risk of about 4E-4 (4 in 10,000) is estimated at the Panna Maria mill in Texas. The lifetime fatal cancer risks to nearby individuals from the operating or standby periods range from 3E-5 to nil, with the highest risk estimated at the Homestake mill in New Mexico. The negligible risks during the operating or standby phase estimated for the Panna Maria, Canon City, and La Sal mills results from the fact that the design of these impoundments allows them to be kept totally wet.

Table 9-6. Estimated exposures and risks to individuals living near operable tailings impoundments.

State/Mill	Maximum Radon Concentration (pCi/l)	Maximum Exposure (WL)	Lifetime Fatal Cancer Risk to Individuals (All Phases)	Lifetime Fatal Cancer Risk to Individuals (Operations)	Distance[a] (meters)
Colorado					
Canon City	4.2E-3	1.7E-5	2E-5	0E+0	3,500
New Mexico					
Ambrosia Lake	2.7E-3	1.4E-5	2E-5	9E-6	7,500
Homestake	5.8E-2	1.9E-4	3E-4	3E-5	1,500
Texas					
Panna Maria	1.0E-1	3.0E-4	4E-4	0E+0	750
Utah					
White Mesa	2.2E-3	1.5E-5	2E-5	2E-6	25,000
Rio Algom	1.5E-3	6.4E-6	9E-6	0E+0	4,500
Shootaring	8.8E-4	3.8E-6	5E-6	3E-6	4,500
Washington					
Sherwood	4.8E-3	1.9E-5	3E-5	1E-5	3,500
Wyoming					
Lucky Mc	1.2E-3	8.4E-6	1E-5	3E-6	25,000
Shirley Basin	2.2E-3	1.6E-5	2E-5	5E-6	25,000
Sweetwater	6.1E-4	4.2E-6	6E-6	1E-6	25,000

(a) Distance from center of a homogenous circular equivalent impoundment to the point where the exposures and risks were estimated.

9.3.1.2 Exposures and Risks to the Regional Population

Collective population risks for the region around each mill site were calculated from the annual exposure in person-WLM for the population in the assessment area. Collective exposure calculations expressed in person-WLM were performed for each mill by multiplying the estimated concentration in each annular sector by the population in that sector. Table 9-7 presents the estimated regional fatal cancers from operable tailings impoundments for all phases of operations and for the operating or standby phase only.

The estimates indicate that these operable impoundments cause 4E-2 deaths/year (4 deaths in 100 years) in the regional (0-80 km) populations. The emissions from the operating or standby period are estimated to cause 4E-3 deaths/year in the regional population; approximately 10 percent of the risk from all phases of operations.

9.3.1.3 Distribution of the Fatal Cancer Risk

The frequency distribution of the estimated lifetime fatal cancer risk for all operable uranium mill tailings is presented in Table 9-8. This distribution was developed by simply summing the distributions projected for each of the 11 facilities. The distribution does not account for overlap in the populations exposed to radionuclides released from more than a single mill. Given the remote locations of these facilities and the relatively large distances between mills, this simplification does not significantly understate the lifetime fatal cancer risk to any individual.

Table 9-7. Estimated fatal cancers per year in the regional (0-80 km) populations around operable tailings impoundments.

State	Mill	Fatal Cancers per Year	
		All Phases	Operating Phase
Colorado	Canon City	6.6E-3	0.0E+0
New Mexico	Ambrosia Lake	3.1E-3	1.5E-3
	Homestake	7.7E-3	8.3E-4
Texas	Panna Maria	1.4E-2	0.0E+0
Utah	White Mesa	1.1E-3	1.1E-4
	Rio Algom	2.8E-4	0.0E+0
	Shootaring	2.2E-5	1.1E-5
Washington	Sherwood	2.9E-3	1.2E-3
Wyoming	Lucky Mc	6.0E-4	1.6E-4
	Shirley Basin	1.8E-3	4.5E-4
	Sweetwater	1.2E-4	3.0E-5
Total		3.9E-2	4.3E-3

Table 9-8. Estimated distribution of the fatal cancer risk to the regional (0-80 km) populations from operable uranium mill tailings piles.

Risk Interval	Number of Persons	Deaths/y
1E-1 to 1E+0	0	0
1E-2 to 1E-1	0	0
1E-3 to 1E-2	0	0
1E-4 to 1E-3	230	6E-4
1E-5 to 1E-4	31,000	9E-3
1E-6 to 1E-5	1,000,000	2E-2
< 1E-6	850,000	5E-3
Totals	1,900,000	4E-2

9.3.2 Post-Disposal Exposures and Risks

The exposures and risks that will remain once the impoundments at these 26 licensed sites are disposed of are estimated for the existing UMTRCA disposal design standard of 20 $pCi/m^2/s$ and alternative fluxes of 6 and 2 $pCi/m^2/s$. As was done in the case of inactive tailings (see Chapter 8), the source terms for each site were calculated based on the lower of the design (or measured flux rate) or the applicable flux standard and the areas of the impoundments. The estimates for all three alternatives reflect the current demography around these sites.

9.3.2.1 Exposures and Risks Under the UMTRCA Standard

Once all the tailings piles are stabilized and disposed of in accordance with the UMTRCA disposal standard, the radon-222 emission rates will all be at or below 20 $pCi/m^2/s$. Estimates of what the post-UMTRCA disposal risks will be are shown in Tables 9-9 through 9-11.

The estimates show that for nearby individuals the maximum lifetime fatal cancer risk will range from 3E-4 to 9E-7 once disposal activities are completed. The number of deaths/year that will occur in the regional populations around these 26 sites is estimated to be 5E-2. The individuals at the highest risks ($\geq$1E-4) reside near the Homestake and Panna Maria piles.

9.3.2.2 Exposures and Risks Under Alternative Disposal Standards

Risks to nearby individuals and the regional populations are shown in Tables 9-12 through 9-14 for the alternative of 6 $pCi/m^2/s$, and Tables 9-15 through 9-17 for the alternative of 2 $pCi/m^2/s$.

At 6 $pCi/m^2/s$, the maximum individual lifetime fatal cancer risk is 9E-5 at the Panna Maria site, a factor of approximately three lower than the risks under the UMTRCA disposal standard. The estimated deaths per year are reduced from 5E-2 to 2E-2. Similarly, at the alternative of 2 $pCi/m^2/s$, the maximum individual risk is reduced by another factor of three to 3E-5, and the deaths/year from all 26 sites is reduced to 6E-3.

Table 9-9. Estimated exposures and risks to individuals living near licensed tailings impoundments post-UMTRCA disposal.

State/Mill	Maximum Radon Concentration (pCi/l)	Maximum Exposure (WL)	Maximum Lifetime Fatal Cancer Risk to Individual	Distance[a] (meters)
Colorado				
Canon City	2.8E-4	1.1E-6	2E-6	3,500
Uravan	1.3E-4	6.4E-7	9E-7	7,500
New Mexico				
L-Bar	6.1E-3	2.4E-5	3E-5	3,500
Churchrock	1.2E-2	4.1E-5	6E-5	1,500
Bluewater	1.1E-2	4.4E-5	6E-5	3,500
Ambrosia Lake	2.3E-3	1.2E-5	2E-5	7,500
Homestake	2.9E-2	9.5E-5	1E-4	1,500
South Dakota				
Edgemont	2.6E-3	1.0E-5	1E-5	3,500
Texas				
Panna Maria	7.1E-2	2.1E-4	3E-4	750
Conquista	1.2E-2	3.9E-5	5E-5	1,500
Ray Point	3.1E-3	1.1E-5	2E-5	2,500
Utah				
White Mesa	1.9E-4	1.3E-6	2E-6	25,000
Rio Algom	1.3E-3	5.7E-6	8E-6	4,500
Moab	1.6E-2	5.9E-5	8E-5	2,500
Shootaring	2.6E-4	1.1E-6	2E-6	4,500
Washington				
Dawn	1.2E-2	3.7E-5	5E-5	750
Sherwood	1.9E-3	7.4E-6	1E-5	3,500
Wyoming				
Lucky Mc	6.3E-4	4.4E-6	6E-6	25,000
Split Rock	8.4E-3	3.1E-5	4E-5	2,500
Umetco	6.9E-4	4.7E-6	6E-6	25,000
Bear Creek	2.8E-4	1.8E-6	2E-6	15,000
Shirley Basin	1.1E-3	7.8E-6	1E-5	25,000
Sweetwater	2.6E-4	1.8E-6	2E-6	25,000
Highland	7.9E-4	5.1E-6	7E-6	15,000
FAP	4.1E-4	2.7E-6	4E-6	15,000
Petrotomics	3.9E-3	1.6E-5	2E-5	3,500

(a) Distance from center of a homogenous circular equivalent impoundment to the point where the exposures and risks were estimated.

Table 9-10. Estimated fatal cancers per year in the regional (0-80 km) populations around licensed tailings impoundments post-UMTRCA disposal.

State	Mill	Fatal Cancers per Year
Colorado	Canon City	4.3E-4
	Uravan	4.2E-5
New Mexico	L-Bar	4.2E-3
	Churchrock	1.5E-3
	Bluewater	4.3E-3
	Ambrosia Lake	2.7E-3
	Homestake	3.8E-3
South Dakota	Edgemont	3.7E-4
Texas	Panna Maria	1.0E-2
	Conquista	1.7E-2
	Ray Point	5.2E-4
Utah	White Mesa	9.1E-5
	Rio Algom	2.5E-4
	Moab	1.3E-3
	Shootaring	6.5E-6
Washington	Dawn	1.3E-3
	Sherwood	1.1E-3
Wyoming	Lucky Mc	3.1E-4
	Split Rock	3.2E-4
	Umetco	3.3E-4
	Bear Creek	2.8E-4
	Shirley Basin	9.2E-4
	Sweetwater	5.3E-5
	Highland	6.8E-4
	FAP	1.9E-4
	Petrotomics	4.5E-4
Total		5.2E-2

Table 9-11. Estimated distribution of the fatal cancer risk to the regional (0-80 km) populations from licensed uranium mill tailings piles post-UMTRCA disposal.

Risk Interval	Number of Persons	Deaths/y
1E-1 to 1E+0	0	0
1E-2 to 1E-1	0	0
1E-3 to 1E-2	0	0
1E-4 to 1E-3	75	1E-4
1E-5 to 1E-4	28,000	6E-3
1E-6 to 1E-5	1,200,000	3E-2
< 1E-6	3,200,000	2E-2
Totals*	4,500,000	5E-2

* Totals may not add due to independent rounding.

Table 9-12. Estimated exposures and risks to individuals living near licensed tailings impoundments post-disposal to 6 $pCi/m^2/s$.

State/Mill	Maximum Radon Concentration (pCi/l)	Maximum Exposure (WL)	Maximum Lifetime Fatal Cancer Risk to Individual	Distance[a] (meters)
Colorado				
Canon City	2.8E-4	1.1E-6	2E-6	3,500
Uravan	1.3E-4	6.4E-7	9E-7	7,500
New Mexico				
L-Bar	1.8E-3	7.2E-6	1E-5	3,500
Churchrock	3.6E-3	1.2E-5	2E-5	1,500
Bluewater	3.3E-3	1.3E-5	2E-5	3,500
Ambrosia Lake	6.9E-4	3.5E-6	5E-6	7,500
Homestake	8.5E-3	2.8E-5	4E-5	1,500
South Dakota				
Edgemont	7.9E-4	3.2E-6	4E-6	3,500
Texas				
Panna Maria	2.1E-2	6.3E-5	9E-5	750
Conquista	3.5E-3	1.1E-5	2E-5	1,500
Ray Point	9.2E-4	3.4E-6	5E-6	2,500
Utah				
White Mesa	1.6E-4	1.1E-6	1E-6	25,000
Rio Algom	3.9E-4	1.7E-6	2E-6	4,500
Moab	4.7E-3	1.7E-5	2E-5	2,500
Shootaring	7.8E-5	3.3E-7	5E-7	4,500
Washington				
Dawn	7.6E-3	2.3E-5	3E-5	750
Sherwood	5.7E-4	2.3E-6	3E-6	3,500
Wyoming				
Lucky Mc	1.9E-4	1.3E-6	2E-6	25,000
Split Rock	2.5E-3	9.3E-6	1E-5	2,500
Umetco	2.1E-4	1.4E-6	2E-6	25,000
Bear Creek	8.4E-5	5.5E-7	7E-7	15,000
Shirley Basin	3.3E-4	2.3E-6	3E-6	25,000
Sweetwater	7.7E-5	5.4E-7	7E-7	25,000
Highland	2.3E-4	1.5E-6	2E-6	15,000
FAP	1.2E-4	8.1E-7	1E-6	15,000
Petrotomics	1.2E-3	4.9E-6	7E-6	3,500

(a) Distance from center of a homogenous circular equivalent impoundment to the point where the exposures and risks were estimated.

Table 9-13. Estimated fatal cancers per year in the regional (0-80 km) populations around licensed tailings impoundments post-disposal to 6 $pCi/m^2/s$.

State	Mill	Fatal Cancers per Year
Colorado	Canon City	4.3E-4
	Uravan	4.2E-5
New Mexico	L-Bar	1.2E-3
	Churchrock	4.4E-4
	Bluewater	1.3E-3
	Ambrosia Lake	8.0E-4
	Homestake	1.1E-3
South Dakota	Edgemont	1.1E-4
Texas	Panna Maria	3.0E-3
	Conquista	4.9E-3
	Ray Point	1.7E-4
Utah	White Mesa	7.6E-5
	Rio Algom	7.6E-5
	Moab	3.8E-4
	Shootaring	2.0E-6
Washington	Dawn	8.1E-4
	Sherwood	3.5E-4
Wyoming	Lucky Mc	1.0E-4
	Split Rock	9.7E-5
	Umetco	1.0E-4
	Bear Creek	8.4E-5
	Shirley Basin	2.8E-4
	Sweetwater	1.6E-5
	Highland	2.0E-4
	FAP	5.8E-5
	Petrotomics	1.4E-4
Total		1.6E-2

Table 9-14. Estimated distribution of the fatal cancer risk to the regional (0-80 km) populations from licensed uranium mill tailings piles post-disposal to 6 $pCi/m^2/s$.

Risk Interval	Number of Persons	Deaths/y
1E-1 to 1E+0	0	0
1E-2 to 1E-1	0	0
1E-3 to 1E-2	0	0
1E-4 to 1E-3	0	0
1E-5 to 1E-4	520	2E-4
1E-6 to 1E-5	110,000	4E-3
< 1E-6	4,400,000	1E-2
Totals*	4,500,000	2E-2

* Totals may not add due to independent rounding.

Table 9-15. Estimated exposures and risks to individuals living near licensed tailings impoundments post-disposal to 2 $pCi/m^2/s$.

State/Mill	Maximum Radon Concentration (pCi/l)	Maximum Exposure (WL)	Maximum Lifetime Fatal Cancer Risk to Individual	Distance[a] (meters)
Colorado				
Canon City	2.8E-4	1.1E-6	2E-6	3,500
Uravan	1.3E-4	6.4E-7	9E-7	7,500
New Mexico				
L-Bar	6.1E-4	2.4E-6	3E-6	3,500
Churchrock	1.2E-3	4.1E-6	6E-6	1,500
Bluewater	1.1E-3	4.4E-6	6E-6	3,500
Ambrosia Lake	2.3E-4	1.2E-6	2E-6	7,500
Homestake	2.7E-3	9.5E-6	1E-5	1,500
South Dakota				
Edgemont	2.6E-4	1.0E-6	1E-6	3,500
Texas				
Panna Maria	7.1E-3	2.1E-5	3E-5	750
Conquista	1.2E-3	3.9E-6	5E-6	1,500
Ray Point	3.1E-4	1.1E-6	2E-6	2,500
Utah				
White Mesa	5.1E-5	3.6E-7	5E-7	25,000
Rio Algom	1.3E-4	5.7E-7	8E-7	4,500
Moab	1.6E-3	5.9E-6	8E-6	2,500
Shootaring	2.6E-5	1.1E-7	2E-7	4,500
Washington				
Dawn	2.6E-3	7.6E-6	1E-5	750
Sherwood	1.9E-4	7.4E-7	1E-6	3,500
Wyoming				
Lucky Mc	6.3E-5	4.4E-7	6E-7	25,000
Split Rock	8.4E-4	3.1E-6	4E-6	2,500
Umetco	6.8E-5	4.7E-7	6E-7	25,000
Bear Creek	2.8E-5	1.8E-7	2E-7	15,000
Shirley Basin	1.1E-4	7.8E-7	1E-6	25,000
Sweetwater	2.6E-5	1.8E-7	2E-7	25,000
Highland	7.9E-5	5.1E-7	7E-7	15,000
FAP	4.1E-5	2.7E-7	4E-7	15,000
Petrotomics	3.9E-4	1.6E-6	2E-6	3,500

(a) Distance from center of a homogenous circular equivalent impoundment to the point where the exposures and risks were estimated.

Table 9-16. Estimated fatal cancers per year in the regional (0-80 km) populations around licensed tailings impoundments post-disposal to 2 $pCi/m^2/s$.

State	Mill	Fatal Cancers per Year
Colorado	Canon City	4.3E-4
	Uravan	4.2E-5
New Mexico	L-Bar	4.2E-4
	Churchrock	1.5E-4
	Bluewater	4.3E-4
	Ambrosia Lake	2.7E-4
	Homestake	3.8E-4
South Dakota	Edgemont	3.7E-5
Texas	Panna Maria	1.0E-3
	Conquista	1.7E-3
	Ray Point	5.2E-5
Utah	White Mesa	2.5E-5
	Rio Algom	2.5E-5
	Moab	1.3E-4
	Shootaring	6.5E-7
Washington	Dawn	2.7E-4
	Sherwood	1.1E-4
Wyoming	Lucky Mc	3.1E-5
	Split Rock	3.2E-5
	Umetco	3.3E-5
	Bear Creek	2.8E-5
	Shirley Basin	9.2E-5
	Sweetwater	5.3E-6
	Highland	6.8E-5
	FAP	1.9E-5
	Petrotomics	4.5E-5
Total		5.8E-3

Table 9-17. Estimated distribution of the fatal cancer risk to the regional (0-80 km) populations from licensed uranium mill tailings piles post-disposal to 2 $pCi/m^2/s$.

Risk Interval	Number of Persons	Deaths/y
1E-1 to 1E+0	0	0
1E-2 to 1E-1	0	0
1E-3 to 1E-2	0	0
1E-4 to 1E-3	0	0
1E-5 to 1E-4	80	2E-5
1E-6 to 1E-5	29,000	6E-4
< 1E-6	4,500,000	5E-3
Totals*	4,500,000	6E-3

* Totals may not add due to independent rounding.

9.4. SUPPLEMENTARY CONTROL OPTIONS AND COSTS

Previous studies have examined the feasibility, effectiveness, and cost associated with various options for controlling releases of radioactive materials from uranium mill tailings (NRC80, EPA82, EPA83, EPA86). These studies have concluded that long-term stabilization and control will be required to protect the public from the hazards associated with these tailings. The standards for long-term disposal established for these licensed sites under the UMTRCA provide for controls to prevent misuse of the tailings, protect water resources, and limit releases of radon-222 to the air. The UMTRCA standard established a design standard to limit long-term radon releases to an average flux not to exceed 20 $pCi/m^2/s$. In addition, the NESHAP promulgated under Section 112 of the Clean Air Act provides for the phasing out of existing tailings impoundments by 1992 and for all future tailings to be disposed of either continuously or in a phased disposal impoundment.

In this section, the costs of long-term isolation of both existing and future tailings impoundments are evaluated.

9.4.1 Control Options for Existing Licensed Tailings Impoundments

For the reasons described in Chapter 8, the control selected for long-term radon-222 control at existing licensed tailings impoundments is the earth cover option.

9.4.1.1 Cost Estimates for Earthen Covers

As in the case of inactive tailings, the cost estimates developed below consider covers designed to meet three radon emission levels: 20 $pCi/m^2/s$ (the level established by the UMTRCA standard), 6 $pCi/m^2/s$, and 2 $pCi/m^2/s$. The basis for the effectiveness of various depths of cover and the unit costs used in this analysis are documented in the "Radon Attenuation Handbook for Uranium Mill Tailings Cover Design" (Ro84) and Appendix B, "Generic Unit Costs for Earth Cover Based Radon-222 Control Techniques."

Even though existing impoundments may still be in use or on standby with additional available capacity, the control options evaluated in this analysis are based on the simplifying assumption that operations have ceased, that the tailings are dry enough to allow the use of heavy equipment, and that the piles have their current dimensions.

The thickness of cover required to achieve a given radon flux is a function of the soil type and the initial radon flux from the pile. In this assessment, soil type B (see Appendix B) is assumed. Table 9-18 presents the current radon flux rate at each pile and the estimated thickness of cover needed to achieve each of the three levels.

Table 9-18. Estimated depths of earth cover needed to achieve given radon flux rates.[a]

State/Mill	Current Radon Flux ($pCi/m^2/s$)	Base Area of Pile[b] (acres)	Depth of Cover (meters) Needed for 20 $pCi/m^2/s$	6 $pCi/m^2/s$	2 $pCi/m^2/s$
Colorado					
Canon City	400	130	3.2	4.5	5.7
Uravan	480	70	3.4	4.7	5.8
New Mexico					
L-Bar	500	128	3.4	4.7	5.9
Churchrock	290	100	2.9	4.1	5.3
Bluewater	305	370	3.1	4.4	5.6
Ambrosia Lake	416	368	3.2	4.5	5.7
Homestake	300	210	2.9	4.2	5.3
South Dakota					
Edgemont	560	123	3.6	4.8	6.0
Texas					
Panna Maria	196	160	2.4	3.7	4.9
Conquista	224	240	2.6	3.9	5.0
Ray Point	520	47	3.5	4.8	5.9
Utah					
White Mesa	981	130	4.1	5.4	6.6
Rio Algom	420	93	3.2	4.5	5.7
Moab	540	147	3.5	4.8	6.0
Shootaring	280	7	2.8	4.1	5.3
Washington					
Dawn	240	128	2.7	3.9	5.1
Sherwood	200	80	2.5	3.7	4.9
Wyoming					
Lucky Mc	220	203	2.6	3.8	5.0
Split Rock	100	156	1.7	3.0	4.2
Umetco	364	218	3.1	4.4	5.6
Bear Creek	85	90	1.5	2.8	4.0
Shirley Basin	275	208	2.5	3.8	5.0
Sweetwater	280	37	2.8	4.1	5.3
Highland	450	200	3.3	4.6	5.8
FAP	420	117	3.2	4.5	5.7
Petrotomics	570	140	3.6	4.9	6.0

(a) Depth of cover based on achieving the lower of the stated flux or the design flux shown in Table 9-4.

(b) The value given includes the area of the tailing impoundment(s) and the areas of evaporation ponds, leach pads, sludge piles, and other features that will require disposal.

Five basic steps or operations are required to place earthen covers on uranium tailings piles. These are: regrading the slopes of the pile to achieve long-term stability, procuring and placing the dirt cover, placing gravel on the pile tops, placing riprap on the pile sides, and reclaiming the borrow pits. A preliminary step, reclaiming radium-bearing materials from evaporation ponds and regrading the ponds, is required at sites where the tailings water was decanted to evaporation ponds.

The total cost of excavating evaporation ponds is calculated by multiplying the volume of waste material by the unit cost of $6.01 per cubic yard for excavation, hauling, spreading, and compacting. The derivation of this unit cost is given in Appendix B.

Once all of the contaminated materials are placed on the pile, the pile is regraded, as necessary, to prepare for the placement of the dirt cover. It is assumed that existing piles have a slope of 2:1 and that the placement of a dirt cover requires a slope no greater than 5:1 (EPA86). The total cost for this operation is the product of the volume regraded and the unit cost of grading. The volumes to be regraded are based on the set of equations presented in Appendix B and two additional assumptions about the geometric configuration of the piles. First, it is assumed that the length of each base side of the pile is the square root of the area of the pile. Second, it is assumed that the ratio between the height and base side lengths of the piles is equal to 40 feet of height per 2,100 feet in base side length. The unit cost of regrading is $1.36 per cubic yard.

The third step is the procurement and placement of the earthen cover. As in the case of inactive tailings piles (see Chapter 8), it is assumed that dirt is available onsite at an average distance of one mile from the pile (two miles round trip). The cost of the dirt cover is the product of the volume required and unit costs for excavating (on trucks), hauling, spreading, and compacting. The volume is estimated by multiplying the surface area of the pile (including the sides) by the depth of cover required to meet each of the three alternative radon flux rates. The equations used to estimate surface areas, cover depths, and the total unit cost of $6.01 per cubic yard for excavation, hauling, spreading, and compacting are documented in Appendix B.

The fourth and fifth steps are erosion controls required to provide long-term stabilization, after the final earthen cover has been put in place. The erosion control system is an essentially maintenance-free gravel and rock system designed for arid conditions. In this system, gravel is placed on the top of the pile, and riprap (random broken stone) is placed on the sides of the pile. The cost of each is a product of surface area, depth, and unit costs. The depth required for adequate erosion protection is assumed to be one-half yard (EPA86). The equations used to calculate the relevant surface areas, and the unit costs of $7.55 per cubic yard for gravel and $23.00 per cubic yard for riprap are documented in Appendix B.

The final operation is the reclamation of the borrow pits, where the earthen cover is extracted. The cost of borrow pit reclamation is assumed to include regrading the sides of the pits from 2:1 to 8:1. Regrading of the pit is calculated using the same methodology used for estimating pile regrading. The volume of the pit is based on the volume of dirt required for cover. The ratio of height to base side length is the same as given above, as is the unit cost for grading.

Tables 9-19 through 9-21 summarize the costs of achieving the alternative levels of control. The total cost of achieving the 20 $pCi/m^2/s$ option at all sites is approximately $599 million. The estimated total costs at all sites for the 6 and 2 $pCi/m^2/s$ options are approximately $779 million and $944 million, respectively. These costs, as discussed in Appendix B, include an overhead and profit factor of 7 percent.

The cost methodology, described above, assumes no previous cover operations have been initiated on the individual piles. However, as shown in Table 9-1, cover operations are proceding and/or have been completed at a number of these sites. In estimating the costs of achieving the alternative fluxes, no attempt has been made to include the costs of possible redesign and re-work that would be required if a lower flux limit has to be achieved at these piles.

Table 9-19. Estimated costs of reducing average radon-222 flux rate to 20 pCi/m^2/s.[a]

(Millions of 1988 Dollars)

Mill	Excavate Evaporation Ponds	Regrade Slopes	Apply Dirt Cover	Apply Riprap	Apply Gravel	Reclaim Borrow Pits	Total Cost	Total Cost Including 7% Overhead & Profit
Canon City								
Primary	0.00	0.78	9.22	1.69	0.83	0.45	12.96	13.87
Secondary	0.00	0.23	4.10	0.75	0.37	0.20	5.65	6.04
Uravan	0.00	0.53	7.61	1.31	0.65	0.37	10.47	11.20
L-Bar	0.00	1.31	14.09	2.40	1.18	0.69	19.67	21.05
Churchrock	0.00	0.91	9.14	1.87	0.92	0.45	13.30	14.23
Bluewater	0.00	4.84	30.43	5.71	2.82	1.48	45.29	48.46
Ambrosia Lake								
Primary	0.00	3.52	27.24	4.63	2.28	1.33	39.00	41.73
Secondary	0.00	1.21	10.23	2.27	1.12	0.50	15.32	16.40
Lined Ponds	8.90	0.00	0.00	0.00	0.00	0.00	8.90	9.53
Unlined Ponds	4.20	0.00	0.00	0.00	0.00	0.00	4.20	4.49
Homestake								
Primary	0.00	2.01	15.74	3.18	1.57	0.77	23.28	24.91
Secondary	0.00	0.23	3.70	0.75	0.37	0.18	5.23	5.60
Edgemont	0.00	1.24	14.02	2.30	1.14	0.68	19.38	20.74
Panna Maria	0.00	1.84	12.54	3.00	1.48	0.61	19.47	20.83
Conquista	0.00	3.38	19.83	4.50	2.22	0.97	30.89	33.05
Ray Point	0.00	0.29	5.24	0.88	0.43	0.26	7.10	7.60
White Mesa	0.00	1.35	17.31	2.43	1.20	0.84	23.13	24.75
Rio Algom								
Upper	0.00	0.28	4.79	0.86	0.43	0.23	6.59	7.05
Lower	0.00	0.29	4.89	0.88	0.43	0.24	6.74	7.21
Moab	0.00	1.62	16.57	2.75	1.36	0.81	23.11	24.72
Shootaring	0.00	0.02	0.63	0.13	0.06	0.03	0.88	0.94
Dawn	0.00	1.31	10.88	2.40	1.18	0.53	16.30	17.44
Sherwood	0.00	0.65	6.30	1.50	0.74	0.31	9.49	10.16
Lucky Mac								
Piles 1-3	0.00	2.63	16.65	3.80	1.88	0.81	25.76	27.57
Evap. Ponds	3.31	0.00	0.00	0.00	0.00	0.00	3.31	3.54
Split Rock	0.00	1.77	8.59	2.92	1.44	0.42	15.14	16.20
UMETCO Gas Hills	0.00	2.92	21.63	4.08	2.02	1.06	31.71	33.93
Bear Creek	0.00	0.78	4.45	1.69	0.83	0.22	7.96	8.52
Shirley Basin	0.00	4.14	22.02	5.15	2.54	1.07	34.93	37.38
Sweetwater	0.00	0.20	3.34	0.69	0.34	0.16	4.74	5.07
Highland	0.00	2.57	21.29	3.75	1.85	1.04	30.50	32.63
FAP	0.00	1.15	12.18	2.19	1.08	0.59	17.20	18.40
Petrotomics	0.00	1.50	16.04	2.62	1.29	0.78	22.24	23.80
Totals	16.41	45.49	370.69	73.09	36.09	18.08	559.84	599.02

(a) Costs are Calculated for the lower of the given flux rate or the design flux.

Table 9-20. Estimated costs of reducing average radon-222 flux rate to 6 pCi/m^2/s.[a]

(Millions of 1988 Dollars)

Mill	Excavate Evaporation Ponds	Regrade Slopes	Apply Dirt Cover	Apply Riprap	Apply Gravel	Reclaim Borrow Pits	Total Cost	Total Cost Including 7% Overhead & Profit
Canon City								
Primary	0.00	0.78	12.93	1.69	0.83	0.63	16.85	18.03
Secondary	0.00	0.23	5.74	0.75	0.37	0.28	7.37	7.89
Uravan	0.00	0.53	10.49	1.31	0.65	0.51	13.49	14.44
L-Bar	0.00	1.31	19.36	2.40	1.18	0.94	25.20	26.96
Churchrock	0.00	0.91	13.26	1.87	0.92	0.65	17.61	18.85
Bluewater	0.00	4.84	42.99	5.71	2.82	2.10	58.46	62.55
Ambrosia Lake								
Primary	0.00	3.52	37.41	4.63	2.28	1.82	49.67	53.14
Secondary	0.00	1.21	15.21	2.27	1.12	0.74	20.55	21.99
Lined Ponds	8.90	0.00	0.00	0.00	0.00	0.00	8.90	9.53
Unlined Pond	4.20	0.00	0.00	0.00	0.00	0.00	4.20	4.49
Homestake								
Primary	0.00	2.01	22.74	3.18	1.57	1.11	30.62	32.76
Secondary	0.00	0.23	5.35	0.75	0.37	0.26	6.96	7.45
Edgemont	0.00	1.24	19.08	2.30	1.14	0.93	24.69	26.42
Panna Maria	0.00	1.84	19.13	3.00	1.48	0.93	26.38	28.22
Conquista	0.00	3.38	29.71	4.50	2.22	1.45	41.25	44.14
Ray Point	0.00	0.29	7.17	0.88	0.43	0.35	9.13	9.77
White Mesa	0.00	1.35	22.66	2.43	1.20	1.11	28.75	30.76
Rio Algom								
Upper	0.00	0.28	6.68	0.86	0.43	0.33	8.58	9.18
Lower	0.00	0.29	6.83	0.88	0.43	0.33	8.77	9.38
Moab	0.00	1.62	22.62	2.75	1.36	1.10	29.45	31.52
Shootaring	0.00	0.02	0.92	0.13	0.06	0.04	1.18	1.26
Dawn	0.00	1.31	16.15	2.40	1.18	0.79	21.83	23.36
Sherwood	0.00	0.65	9.59	1.50	0.74	0.47	12.95	13.86
Lucky Mc								
Piles 1-3	0.00	2.63	25.00	3.80	1.88	1.22	34.53	36.95
Evap. Ponds	3.31	0.00	0.00	0.00	0.00	0.00	3.31	3.54
Split Rock	0.00	1.77	15.01	2.92	1.44	0.73	21.87	23.41
UMETCO Gas Hills	0.00	2.92	30.61	4.08	2.02	1.49	41.12	44.00
Bear Creek	0.00	0.78	8.16	1.69	0.83	0.40	11.85	12.68
Shirley Basin	0.00	4.14	33.35	5.15	2.54	1.63	46.81	50.08
Sweetwater	0.00	0.20	4.86	0.69	0.34	0.24	6.34	6.78
Highland	0.00	2.57	29.53	3.75	1.85	1.44	39.13	41.87
FAP	0.00	1.15	17.00	2.19	1.08	0.83	22.25	23.81
Petrotomics	0.00	1.50	21.80	2.62	1.29	1.06	28.29	30.27
Totals	16.41	45.49	531.34	73.09	36.09	25.92	728.33	779.31

(a) Costs are calculated for the lower of the given flux rate or the design flux.

Table 9-21. Estimated costs of reducing average radon-222 flux rate to 2 pCi/m^2/s.[a]

(Millions of 1988 Dollars)

Mill	Excavate Evaporation Ponds	Regrade Slopes	Apply Dirt Cover	Apply Riprap	Apply Gravel	Reclaim Borrow Pits	Total Cost	Total Cost Including 7% Overhead & Profit
Canon City								
Primary	0.00	0.78	16.31	1.69	0.83	0.80	20.40	21.82
Secondary	0.00	0.23	7.25	0.75	0.37	0.35	8.95	9.58
Uravan	0.00	0.53	13.12	1.31	0.65	0.64	16.25	17.39
L-Bar	0.00	1.31	24.17	2.40	1.18	1.18	30.24	32.36
Churchrock	0.00	0.91	17.02	1.87	0.92	0.83	21.55	23.06
Bluewater	0.00	4.84	54.45	5.71	2.82	2.66	70.47	75.41
Ambrosia Lake								
Primary	0.00	3.52	46.69	4.63	2.28	2.28	59.40	63.56
Secondary	0.00	1.21	19.76	2.27	1.12	0.96	25.32	27.09
Lined Ponds	8.90	0.00	0.00	0.00	0.00	0.00	8.90	9.53
Unlined Pond	4.20	0.00	0.00	0.00	0.00	0.00	4.20	4.49
Homestake								
Primary	0.00	2.01	29.13	3.18	1.57	1.42	37.32	39.93
Secondary	0.00	0.23	6.85	0.75	0.37	0.33	8.54	9.13
Edgemont	0.00	1.24	23.70	2.30	1.14	1.16	29.54	31.60
Panna Maria	0.00	1.84	25.14	3.00	1.48	1.23	32.68	34.97
Conquista	0.00	3.38	38.73	4.50	2.22	1.89	50.71	54.25
Ray Point	0.00	0.29	8.94	0.88	0.43	0.44	10.98	11.75
White Mesa	0.00	1.35	27.54	2.43	1.20	1.34	33.87	36.24
Rio Algom								
Upper	0.00	0.28	8.41	0.86	0.43	0.41	10.39	11.12
Lower	0.00	0.29	8.59	0.88	0.43	0.42	10.62	11.36
Moab	0.00	1.62	28.14	2.75	1.36	1.37	35.25	37.71
Shootaring	0.00	0.02	1.18	0.13	0.06	0.06	1.45	1.56
Dawn	0.00	1.31	20.96	2.40	1.18	1.02	26.87	28.76
Sherwood	0.00	0.65	12.60	1.50	0.74	0.61	16.10	17.23
Lucky Mc								
Piles 1-3	0.00	2.63	32.63	3.80	1.88	1.59	42.53	45.50
Evap. Ponds	3.31	0.00	0.00	0.00	0.00	0.00	3.31	3.54
Split Rock	0.00	1.77	20.87	2.92	1.44	1.02	28.02	29.98
UMETCO Gas Hills	0.00	2.92	38.80	4.08	2.02	1.89	49.71	53.19
Bear Creek	0.00	0.78	11.54	1.69	0.83	0.56	15.40	16.47
Shirley Basin	0.00	4.14	43.68	5.15	2.54	2.13	57.64	61.68
Sweetwater	0.00	0.20	6.25	0.69	0.34	0.30	7.80	8.34
Highland	0.00	2.57	37.04	3.75	1.85	1.81	47.01	50.30
FAP	0.00	1.15	21.39	2.19	1.08	1.04	26.86	28.74
Petrotomics	0.00	1.50	27.06	2.62	1.29	1.32	33.80	36.17
Totals	16.41	45.49	677.94	73.09	36.09	33.07	882.07	943.82

(a) Costs are calculated for the lower of the given flux rate or the design flux.

9.4.1.2 Effectiveness of the Earth Cover Control Options

Once all piles have been disposed of in accordance with the current designs under the UMTRCA standard, it is estimated that that maximum individual's lifetime fatal cancer risk will be 3E-4 (three chances in 10,000) and that the emissions from all piles will cause approximately one death every 20 years (5E-2 deaths per year) in the population of 4.5 million persons living within 80 kilometers of these sites.

At the alternative 6 $pCi/m^2/s$ flux limit, it is estimated that the maximum individual's lifetime fatal cancer risk would be reduced by a factor of approximately three, to 9E-5 (9 chances in 100,000). Similarly, the deaths per year in the regional population would be reduced to approximately 2E-2 (one death every 50 years). Adopting the alternative 2 $pCi/m^2/s$ flux limit would achieve another factor of three reduction in risks. The maximum individual risk at 2 $pCi/m^2/s$ is estimated to be reduced to 3E-5, and the deaths per year are estimated to be reduced to 6E-3.

9.4.2 Work Practices for New Tailings Impoundments

Tailings impoundments constructed in the future must, at minimum, meet current Federal standards for prevention of groundwater contamination and airborne particulate emissions. The baseline tailings impoundment will have a synthetic liner, be built partially below grade, and have earthen dams or embankments to facilitate decommissioning.* A means for dewatering the tailings after the area is filled should also be incorporated. This conventional design allows the maintenance of a water cover over the tailings during the milling and standby periods, thus maintaining a very low level of radon-222 emissions. Dewatering of the tailings can be accelerated using built-in drains. A synthetic liner is placed along the sides and bottom. Cover material may be added after the impoundment has reached capacity or is not going to be used further and the tailings have dried. Two alternatives to the work practices assumed in this baseline model new tailings impoundment are evaluated in the following sections.

9.4.2.1 Phased Disposal

The first alternative work practice being evaluated for model new tailings impoundments is phased disposal. In phased or multiple cell disposal, the tailings impoundment area is partitioned into cells which are used independently of other cells. After a cell has been filled, it can be dewatered and covered, and another cell used. Tailings are pumped to one initial cell

* It may in some cases be feasible to replace synthetic with clay liners. This option, however, is not evaluated here. In addition, it is possible but not cost-effective to construct below-grade tailings impoundments. Section 9.4.3 provides a comparison of the cost-effectiveness of below-grade versus partially below-grade impoundments.

until it is full. Tailings are then pumped to a newly constructed second cell, and the first cell is dewatered and then left to dry. After the first cell dries, it is covered with earth obtained from the construction of a third cell. This process is continued sequentially. This system minimizes emissions at a given time since a cell can be covered after use without interfering with operation as opposed to the case of a single cell. Less total surface area is thus exposed at any one time.

Phased disposal is effective in reducing radon-222 emissions since tailings are initially covered with water and finally with earth. Only during a drying-out period of about 5 years for each cell are there any radon-222 emissions from a relatively small area. During mill standby periods, a water cover could be maintained on the operational cell. For extended standby periods, the cell could be dewatered and a dirt cover applied.

Radon emissions from a model six-cell phased disposal impoundment are estimated to be 13.5 kCi during the 20-year operating life of the impoundment (EPA86). The 13.5 kCi of radon released during the operating period is about 55 percent of the 24.5 kCi estimated to be released from the baseline single-cell impoundment (EPA86). Once the phased disposal impoundment is filled and covered with three meters of soil, annual radon-222 releases are estimated to be 0.33 kCi/y, comparable to the estimated releases (0.3 kCi/y) for a single-cell impoundment covered with the same depth of soil.

9.4.2.2 Continuous Disposal

The second alternative work practice, continuous disposal, is based on removal of water from the tailings slurry prior to disposal. The relatively dry dewatered (25 to 30 percent moisture) tailings can then be dumped and covered with soil almost immediately. No extended drying phase is required, and therefore very little additional work would be required during final closure. Additionally, groundwater problems are minimized. To implement a dewatering system requires added planning, design, and modification of current designs. Additional holding ponds with ancillary piping and pumping systems would be required to handle the liquid removed from the tailings. Using trucks or conveyor systems to transport the tailings to disposal areas might also be more costly than slurry pumping. Thus, although tailings are more easily managed after dewatering, this practice would have to be carefully considered on a site-specific basis.

Various filtering systems such as rotary vacuum and belt filters are available and could be adapted to a tailings dewatering system. Experimental studies would probably be required for a specific ore to determine the filter media and dewatering properties of the sand and slime fractions. Modifications to the typical mill ore grinding circuit may be required to allow efficient dewatering and to prevent filter plugging or blinding. Corrosion-resistant materials would be required in any tailings

dewatering system due to the highly corrosive solutions that must be handled. Continuous tailings dewatering is not practiced at any uranium mills in the United States, but it has been proposed at several sites in the southwestern and eastern part of the country (MA83). Tailings dewatering systems have been used successfully at nonferrous ore beneficiation mills in the United States and Canada (Ro78).

Radon emissions from a model continuous disposal (single-cell) impoundment are estimated to be 7.5 kCi during the 15-year operating life of the impoundment (EPA86). The 7.5 kCi of radon released during the operating period is about 30 percent of the 24.5 kCi estimated to be released from the baseline single-cell impoundment (EPA86). Much of this reduction is attributable to the fact that the 5-year drying out period (when much of the radon-222 is released) is avoided with a continuous disposal system. Once the continuous disposal impoundment is filled and covered with three meters of soil, annual radon-222 releases are estimated to be 0.3 kCi/y, the same as the releases estimated (0.3 kCi/y) for single-cell impoundment covered with the same depth of soil.

9.4.3 Comparison of Control Options for New Tailings Impoundments

To meet current Federal radon-222 emission standards, new tailings areas will have synthetic liners with either earthen dams or embankments, and also incorporate a means of dewatering the tailings at final closure. These new tailings can either be stored below or partially above grade. Although below-grade storage provides the maximum protection from windblown emissions and water erosion and eliminates the potential for dam failure, it is not cost-effective compared to partially above-grade disposal technology and has a greater potential for contaminating groundwater.

Previous analysis of work practices for new model tailings impoundments has estimated costs and radon releases for a number of alternative control technologies (EPA86). These estimated costs are listed in Table 9-22. The estimated radon releases are summarized in Table 9-23. These estimates suggest that storage of tailings piles partially above grade is cost-effective, when compared to fully below-grade designs. Completely below-grade designs are estimated, on average, to increase costs by 20 percent.

Partially below-grade piles have been shown to be cost-effective compared to above-grade impoundments. Excavation costs for the final dirt cover are incurred in both cases. Using the excavated pit from which the earth cover is taken to store tailings provides no-cost benefits in terms of windblown emissions, water erosion, and dam failure. In addition, dam construction cost is minimized because the sides of the excavated pit replace part of the dam.

Table 9-22. Estimated total costs for new tailings control technologies.[a]

(in Millions of 1985 Dollars)

Technology	Below Grade	Partially Below Grade
Single Cell	41.33	29.71
Phased Disposal		
Six Cells	47.78	41.54
Continuous Disposal		
Trench Design	54.16	47.75
Single Cell Design	NA	37.44

(a) Based on comparable dimensions for cells.
Source: EPA86

Table 9-23. Summary of estimated radon-222 emissions for new tailings control technologies.[a]

Technology	Operational Emissions (kCi/y)			Post-Operational Emissions (kCi/y)		Cumulative Total Emissions		
	Active (15 y)	Dry-Out (5 y)	Average	Uncovered	With Final Cover[b]	20 y	40 y	60 y
Single Cell[c]	0.8	2.5	1.2	NA	0.30	25	31	37
Phased Disposal	NA	NA	0.7	NA	0.33	13	20	27
Continuous Trench Disposal	NA	NA	0.5[d]	NA	0.36	10	17	24
Continuous Single Cell	NA	NA	0.5[d]	NA	0.30	9	15	21

NA - Not Applicable.
(a) Emissions estimates based on 280 pCi/g Ra-226 and a specific flux of 1 $pCi/m^2/s$ per pCi/g Ra-226.
(b) Final cover to meet 20 $pCi/m^2/s$ UMTRCA standard.
(c) Assumes 20 percent of impoundment area is dry beach during active phase.
(d) Assumes 15-year active life.

Adapted from EPA86.

The 20 percent increase in costs for fully below-grade disposal does not appear to be justified by additional benefits. The increased costs are incurred for additional excavation. The additional material is not needed for dirt cover, and the bulk of the benefits to be derived from reducing windblown emissions, water erosion, and dam failure have already been captured by the partially below-grade design. Therefore, only designs that are partially above-grade are considered.

Also dropped from consideration is the continuous trench pile design. This technology has little operational advantage over the continuous single cell design and is not cost-effective.

9.4.4 Engineering Design for New Model Tailings Impoundments

New tailings disposal impoundments at uranium mills can be designed to incorporate current Federal regulations on radon-222 emissions. Three types of new model impoundments are considered: Single-Cell, Phased Disposal, and Continuous Disposal. Engineering designs for each type of impoundment are discussed in the following sections. These models will later be used to generate cost estimates.

9.4.4.1 Model Single Cell Impoundment

The single cell impoundment can be constructed partially below grade. The basic design and layout (consistent with earlier uranium mill tailings studies) of a single cell impoundment, assuming a capacity of 1,800 tons per day, 310 working days, and a 15-year active life of the mill, are a square sloping pit (an inverted truncated pyramid) with a tailings depth of 12-meters, excluding a 3-meter final cover. Further, the final surface area of this impoundment is 47 ha (116 acres), with a tailings capacity of 8.4 million tons and a tailings volume of 5.25 million cubic meters.

The final surface area is obtained by taking the square of the length at final cover (685 meters) and converting this value into hectares, using appropriate rates of conversion. Tailings capacity (in millions of tons) is the product of 1,800 tons per day, 310 working days, and a 15-year active life of the mill. Tailings volume is tailings capacity converted into meters, using a conversion rate of 1.6 (EPA86).

The size, shape, and layout for a model single cell impoundment partially below grade are shown in Figures 9-1 and 9-2. The model has a base with a width and length of 637 meters and a slope of 2:1. The height to final cover is 12 meters, with a length, at final cover, of 685 meters. Synthetic liners are placed along the sides and bottom; tailings are stored 6 meters each above and below grade; and earthen dams are constructed with a berm 6 meters wide with a height of 9 meters, an outside slope of 5:1, and an inside slope of 2:1.

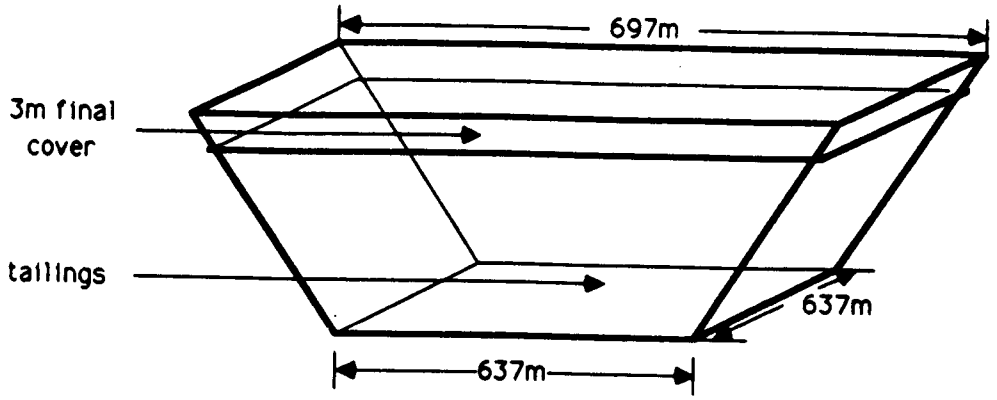

Shape and dimensions of the single-cell impoundment

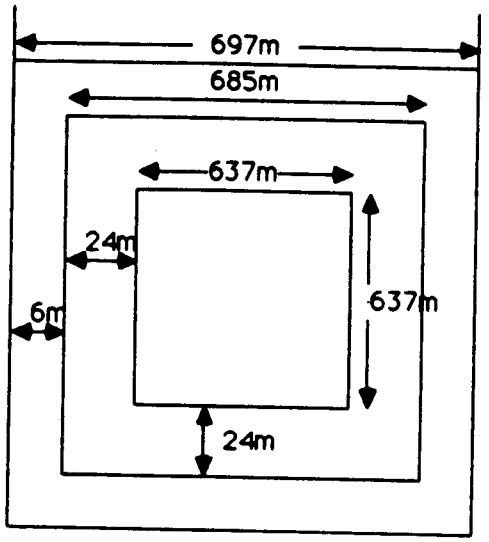

Layout of model single-cell impoundment

* Diagrams are not drawn to scale

Figure 9-1. Shape and layout of the model single-cell impoundment.

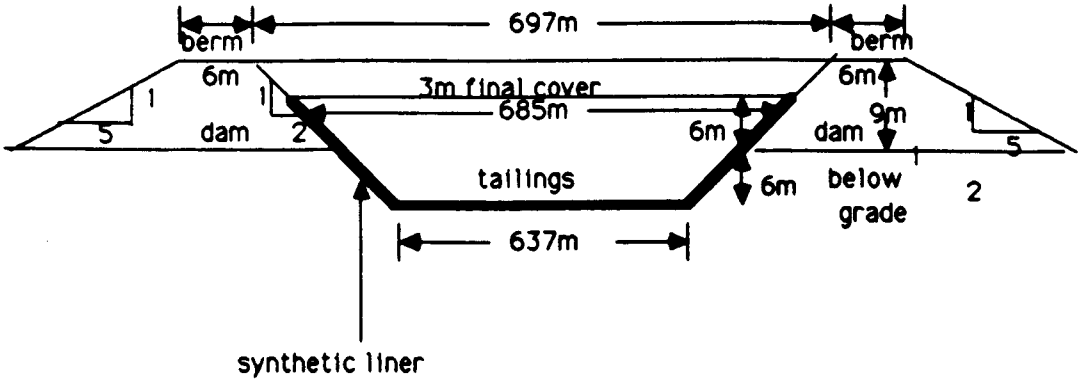

* Diagram not drawn to scale.

Figure 9-2. Size of partially above-grade model single cell impoundment.

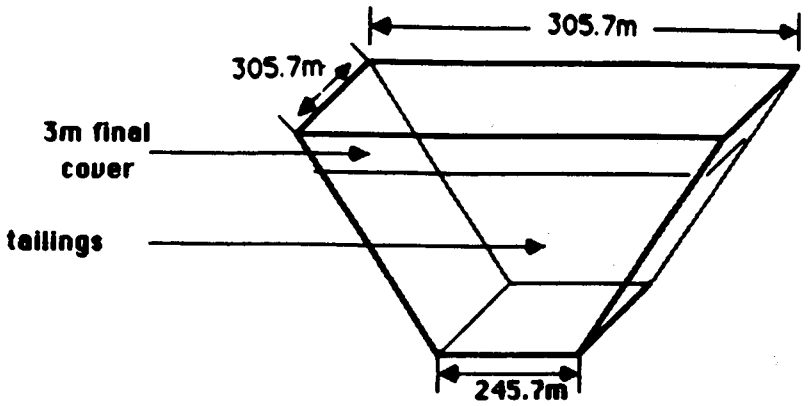

Dimension of each cell of phased disposal impoundment

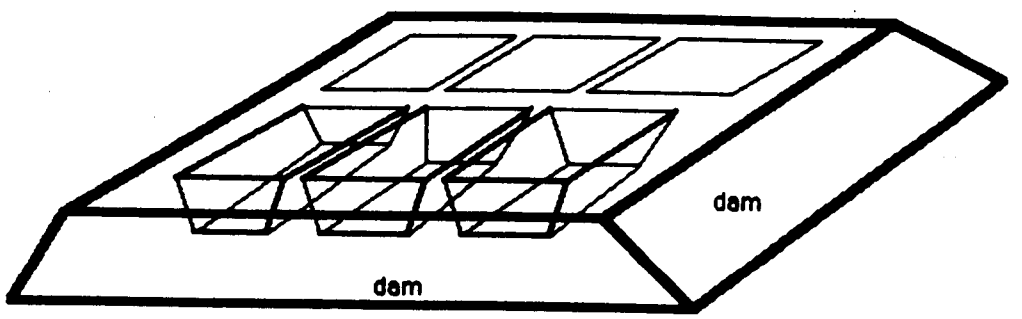

Layout of phased disposal impoundment

* **Diagrams are not drawn to scale.**

Figure 9-4. Shape and layout of model phased disposal impoundment.

Table 9-24. Unit cost categories for partially below-grade impoundments.

Cost Component	Single Cell	Phased Disposal (all Cells)	Continuous Disposal (Single Cell)
Excavation	Required	Required	Required
Synthetic Liner	Required	Required	Required
Grading	Required	Required	Required
Drainage System	Required	Required	Not Required
Dam Construction	Required	Required	Required
Cover (3 meters)	Required	Required	Required
Gravel Cap	Required	Required	Required
Riprap	Required	Required	Required
Evaporation Pond	Not Required	Required	Required
Vacuum Filter	Not Required	Not Required	Required
Indirect Cost	Required	Required	Required

Adapted from EPA86.

Total costs for each design, shown in Tables 9-25 through 9-27, indicate that the phased partially above grade disposal impoundment is the most expensive design (about $54 million), while the single cell partially above-grade impoundment (about $37 million) is the least expensive. Costs for the continuous single cell design (about $41 million) are marginally different from those of the single cell impoundment, although the uncertainties surrounding the technology used in this design are the largest. The volumes or surface areas and the unit costs that were used in calculating the cost figures are also provided in Tables 9-25 to 9-27. The equations used to calculate volumes and surface areas are discussed in detail in Appendix B, as are the sources and methodologies used to calculate unit costs. The assumptions and rationales used in developing estimates for each cost category are discussed in the following paragraphs.

For each design, costs for excavation are calculated by multiplying the volume of the tailings cells that are below grade by unit cost of excavation by 21 cubic yard scrappers for a 5,000 foot haul. It is assumed that the dirt is not hauled by truck, but rather pushed aside for later use in dam construction and for dirt cover.

Dam construction is required for each design, and the dams are assembled during the excavation stage. Unit costs for dam construction are a sum of costs for grading and compacting. While unit costs for compacting are on a square unit rather than a cubic unit basis, both are multiplied by the volume of the dam because the dam materials must be compacted as each meter of material is graded into place. This procedure insures stability of the dam. The volumes of the dams are derived by calculating the entire aboveground volume of the pile and dams and then subtracting the aboveground volumes of the piles and their covers.

Synthetic liners are placed on the bottom and the sides of the tailings impoundment. Cost for synthetic liners are derived from the product of the unit cost ($13.35 per square meter) and surface areas of the interior of the cells, excluding the final three meters where the dirt cover is placed. Design specific volumes and surface areas are calculated using dimensions given in Figures 9-1 through 9-4.

Evaporation ponds are required for both the phased disposal and continuous single cell impoundments. Evaporation ponds are used to regulate or control the water level in the waste impoundment. The surface area required for evaporation is assumed to be equal to approximately one-third of the surface area of the single impoundment or two of the phased disposal impoundments. This assumption is based on the ratio of the surface areas of evaporation ponds to the surface areas of tailings impoundments at existing mills. Since phased piles will have only one cell in operation at a time, this design requires an evaporation pond with a surface area equal to the surface area of one cell. As the continuous pile is assumed to store only dried tailings, it

Table 9-25. Costs for a single cell partially below-grade new model tailings impoundment.

(1988 Dollars)

Cost Component	Volume or Area (m^3 or m^2)	Unit Cost ($\$/m^3$ or $\$/m^2$)	Total Cost ($\$ \times 10^6$)
Excavation	2,527,494	4.92	12.42
Grading	469,225	1.78	0.83
Cover			
Grade		1.78	
Compact		1.49	
Total	1,432,479	3.27	4.68
Gravel Cap	251,341	9.87	2.48
Riprap	138,408	30.07	4.16
Dam Construction			
Grade		1.78	
Compact		1.49	
Total	1,010,232	3.27	3.30
Synthetic Liner	442,405	13.35	5.91
Drainage System	641,089	0.60	0.38
Subtotal: Direct Cost			34.17
Indirect Cost @ 7%			2.39
Total Cost			36.56

Table 9-26. Costs for a phased design, partially below-grade, new model tailings impoundment.

(1988 Dollars)

Cost Component	Volume or Area (m^3 or m^2)	Unit Cost ($\$/m^3$ or $\$/m^2$)	Total Cost ($\$ \times 10^6$)
Excavation	2,392,462	4.92	11.76
Grading	517,558	1.78	0.92
Cover			
Grade		1.78	
Compact		1.49	
Total	1,616,978	3.27	5.28
Gravel Cap	442,835	9.87	4.37
Riprap	181,013	30.07	5.44
Dam Construction			
Grade		1.78	
Compact		1.49	
Total	4,382,475	3.27	14.32
Synthetic Liner	451,901	13.35	6.03
Drainage System	1,066,682	0.60	0.64
Evaporation Pond			
Excavate		4.91	
Synthetic Liner		14.59	
Total	88,387	19.50	1.72
Subtotal: Direct Cost			50.49
Indirect Cost @ 7%			3.53
Total Cost			54.02

Table 9-27. Costs for a continuous design, partially below-grade, new model tailings impoundment.

(1988 Dollars)

Cost Component	Volume or Area (m^3 or m^2)	Unit Cost ($\$/m^3$ or $\$/m^2$)	Total Cost ($\$ \times 10^6$)
Excavation	2,527,494	4.92	12.42
Grading	469,225	1.78	0.83
Cover			
Grade		1.78	
Compact		1.49	
Total	1,432,479	3.27	4.68
Gravel Cap	251,341	9.87	2.48
Riprap	138,408	30.07	4.16
Dam Construction			
Grade		1.78	
Compact		1.49	
Total	1,010,232	3.27	3.30
Synthetic Liner	442,405	13.35	5.91
Evaporation Pond			
Excavate		4.91	
Synthetic Liner		14.59	
Total	176,775	19.50	3.45
Vacuum Filter	NA	NA	0.92
Subtotal: Direct Cost			38.15
Indirect Cost @ 7%			2.26
Total Cost			40.83

will require an evaporation pond twice the size of that required by the phased disposal design. Evaporation ponds are assumed to be excavated to a 1-meter depth and to employ a synthetic liner to protect groundwater.

Once each cell is filled it is assumed that the tailings are graded prior to cover. Grading volume is assumed to be a product of the surface area of the top portion of the pile and a depth of 1 meter.

Costs for earthen cover are based on a depth of 3 meters and unit costs for grading and compacting. It is assumed, as was the case for dam construction, that compacting is done after each meter of dirt is put in place.

Riprap and gravel caps are needed for erosion control and are required to maintain long-term stability of the tailings impoundment. Typically, gravel is placed on the top of the pile and rock (riprap) is placed on the sides of the pile. The cost of each is the product of surface area, depth, and unit costs. The depth required for adequate erosion protection is assumed to be one-half meter (EPA86). Equations for calculating the relevant surface areas, and the unit costs for gravel cap ($9.87 per cubic meter) and riprap ($30.07 per cubic meter) are given in Appendix B.

Except for the continuous single cell impoundment for which the tailings are dried prior to disposal, all other designs require a drainage system. Costs for drainage systems are $0.60 per square meter, for both the single cell and phased disposal impoundments. The surface area is assumed to be the entire above-ground surface area of the pile.

Vacuum filters are required to dewater tailings in the continuous single cell impoundment. Dewatering and continuously covering tailings is an attractive but untried method for tailings disposal. Tailings dewatering systems have been used successfully at nonferrous ore beneficiation mills in the United States and Canada (EPA86). Several uranium mills have proposed the use of continuous disposal systems. For example, Pioneer Uravan, Inc., submitted plans to build the San Miguel Mill using continuous tailings disposal at Slick Rock, Colorado (NRC80). The planned tailings disposal operation consisted of below-grade burial of horizontal belt filtered tailings in a series of ten trenches. The mill, however, has not been constructed. An advantage of dewatering the tailings slurry prior to disposal is that the tailings can be placed and covered with soil immediately. Thus, no extended dry phase is necessary, and groundwater problems are reduced.

To implement a dewatering system, factors such as added placing, design, and modification of current designs should be evaluated. Further, adaptation of horizontal belt vacuum filters, to enhance the capability of the dewatering system, should

also be considered. A horizontal belt vacuum filter basically filters sand and slimes fractions from the tailings slurry.

Previous studies provide costs for such systems, but these reported costs have not been consistent with each other. For example, the cost estimate ranges from $1.46 million (in 85 dollars (EPA86), to $465,000 (NRC80). Given this discrepancy, manufacturers sales representatives were contacted to provide current cost estimates (EC88). Their estimate, based on a 316 frame with a carbon frame for the wetted part and including auxiliary parts, is $845,000. Costs for transportation and installation are excluded. Freight costs depend on location of site and are assessed at $15,000 for sites in Arizona (EC88). Installation costs, based on installation costs for similar equipment, are assumed to be 7.5 percent of the cost of the horizontal belt vacuum filter. Therefore, the total cost for this equipment, installed, is calculated at $923,375.

Added to the cost of operations, as described above, is and overhead and profit factor estimated at 7 percent. The calculation of this factor is described in Appendix B.

9.4.6 Work Practices at Existing Operable Impoundments

Radon releases during the operating and standby periods at existing operable impoundments can be reduced by active controls that minimize the area of the tailings that are dry and exposed. Unlike the case of long-term isolation, where active institutional controls are not deemed to be reliable, active controls during the operable phase of a mill can be assured simply by making them a condition of the facility's license. Two active techniques have been identified to minimize the area of dry tailings at existing impoundments: water and earthen covers.

As noted in Section 9.2 (see also Chapter 8), both water and earthen covers can efficiently attenuate the radon generated in the tailings. Thus, maximizing the extent of the tailings pond, maintaining the moisture content in the exposed tailing at or near the saturation point, and/or placing earth covers on portions of the impoundment that are filled and/or inactive can result in a significant reduction in radon releases. Table 9-2 shows the extent to which these managment practices are currently used at the 11 operable impoundments. Portions of the tailings are either ponded or wet at all of the mills, and earthen covers have been placed on portions of the operable impoundments at the Panna Maria, Ambrosia Lake, and Lucky Mc mills. While the extent of control varies from mill to mill, the combined ponded, wet, and covered acreages at all 11 mills represents almost 75 percent of the the total impoundment areas.

To evaluate the potential effectiveness of these management options, an estimate was made for each mill of the extent of cover necessary to achieve a flux averaged over all areas of the impoundment equal to the UMTRCA disposal limit of 20 $pCi/m^2/s$.

For both water and earth covers, the estimate assumes complete attenuation of the the radon from the covered areas. Given active control, virtually complete attenuation is achievable if the wet tailings and interim earth covers are maintained at or near the saturation point.

Site-specific design and other factors will determine the work practice or combination of practices selected at a given mill. However, to evaluate the costs associated with these work practices a single control, either wetting or earth cover, was assigned to each mill. Wetting was assigned as the work practice at mills where the impoundments are lined with clay or a synthetic liner. At these mills, the addition of water to the tailings should not result in the degradation of groundwater. At mills that lack such a liner, earthen covers were selected.

Table 9-28 shows the extent of coverage that would be required to achieve an average flux of 20 $pCi/m^2/s$ at each of the operable mills. At three sites, Chevron's Panna Maria mill, Cotter's Canon City mill, and Rio Algom's La Sal mill, no change from existing practice would be required to achieve an average flux of 20 $pCi/m^2/s$. At the Shootaring mill, with only seven acres of tailings, achieving an average flux of 20 $pCi/m^2/s$ may not leave sufficient beach area to allow future disposal operations. Thus, unless the work practice applies to the licensed impoundment area rather than the current tailings area, the Shootaring mill would have to close.

Costs of the alternative work practices of additional wetting and partial cover with earthen covers have been estimated based on the additional areas to be controlled shown in Table 9-28. For sites where the water option was selected, the costs are based on the net evaporation rate for the site and maintaining the moisture of the controlled areas at 20 percent water. Since sprinkling systems and/or water trucks are already in place, no capital costs for this equipment are assessed. At the sites where earthen covers are needed, the costs include both the costs of placing the earthen covers and the cost of additional water to maintain the covers near the saturation point. The total annualized costs, assuming a 5 percent real interest rate, for these work practices are estimated to be $1.25 million/year.

The risks that will remain when these work practices are implemented will be roughly comparable to the risks that are estimated for the piles post-UMTRCA disposal. As an example, for the Sherwood mill, the lifetime fatal cancer risk from all phases of operations (see Table 9-6) is 3E-5. This would be reduced to approximately 1E-5 when operating controls that meet the long-term disposal emissions limits are implemented.

Table 9-28. Additional areas of operable impoundments to be controlled to achieve average radon-222 flux of 20 $pCi/m^2/s$.

State/Impoundment	Current Conditions (acres)					Additional Area to be Controlled (acres)
	Total	Covered	Ponded	Wet	Dry	
Colorado						
Canon City - Total	130	0	128	2	0	0
New Mexico						
Ambrosia Lake - Secondary	121	13	0	0	108	75
Ambrosia Lake - Evap. Ponds	280	0	162	0	118	118
Ambrosia Lake - Total	401	13	162	0	226	193
Homestake - Total	210	40	100	0	70	5*
Texas						
Panna Maria	160	80	40	40	0	0
Utah						
White Mesa	130	0	55	70	5	2.4
Rio Algom - Lower	47	0	18	29	0	0
Shootaring	7	0	2	1	4	3.5
Washington						
Sherwood	80	0	0	40	40	32
Wyoming						
Lucky Mc - Pile 1-3	203	108	35	0	60	32
Lucky Mc - Evap. Ponds	104	0	104	0	0	0
Lucky Mc - Total	307	108	139	0	60	32
Shirley Basin	275	0	179	36	60	34
Sweetwater	37	0	30	0	7	4.4

* Based on the reported 65 pCi/g in the dry exposed tailings.

9.5 REFERENCES

EC88 Enviro-Clear Division of Amstar Corporation, communication with sales representative, August 30, 1988.

EPA82 U.S. Environmental Protection Agency, "Final Environmental Impact Statement for Remedial Action Standards for Inactive Uranium Processing Sites (40 CFR 192)," Vol.I, EPA 520/4-82-013-1, Office of Radiation Programs, Washington, DC, October 1982.

EPA83 U.S. Environmental Protection Agency, "Final Environmental Impact Statement for Standards for the Control of By-Product Materials from Uranium Ore Processing (40 CFR 192)," Vol.I, EPA 520/1-83-008-1, Office of Radiation Programs, Washington, DC, 1983

EPA86 U.S. Environmental Protection Agency, "Final Rule for Radon-222 Emissions from Licensed Uranium Mill Tailings," EPA 520/1-86-009, Office of Radiation Programs, Washington, DC, August 1986.

MA83 Marline Uranium Corp. and Union Carbide Corp., "An Evaluation of Uranium Development in Pittsylvania County, Virginia," October 15,1983.

NRC80 U.S. Nuclear Regulatory Commission, "Final Generic Environmental Impact Statement on Uranium Milling," NUREG-0706, Washington DC, September 1980.

PNL84 Pacific Northwest Laboratory, "Estimated Population Near Uranium Tailings," PNL-4959, WC-70, Richland, WA, January 1984.

Ro78 Robinsky, E.I., "Tailing Disposal by the Thickened Discharge Method for Improved Economy and Environmental Control," in Volume 2, Proceedings of the Second International Tailings Symposium, Denver, CO, May 1978.

Ro84 Rogers, V.C.; Neilson, K.K.; and Kalkwarf, D.R., "Radon Attenuation Handbook for Uranium Mill Tailings Cover Design," NUREG/CR-3533, prepared for the U.S. Nuclear Regulatory Commission, Washington, DC, April 1984.

10. DEPARTMENT OF ENERGY RADON SITES

The Department of Energy (DOE) radon source category comprises sites owned or controlled by the Federal government and operated or maintained under the authority of the DOE where significant quantities of radium-bearing wastes are located. These wastes, which include pitchblende residues, uranium and thorium wastes, contaminated soils, and uranium mill tailings, release radon-222 and radon-220 to the atmosphere.

Five DOE radon sites are known: (1) the Feed Materials Production Center (FMPC), Fernald, Ohio; (2) the Niagara Falls Storage Site (NFSS), Lewiston, New York; (3) the Weldon Spring Site (WSS), Weldon Spring, Missouri; (4) the Middlesex Sampling Plant (MSP), Middlesex, New Jersey; and (5) the Monticello Uranium Mill Tailings Pile (MUMT), Monticello, Utah.

EPA characterized these five sites in 1984 in support of the previous radionuclide NESHAPS rulemaking (EPA84). Since that time, DOE has taken extensive interim remedial actions and has begun an ongoing remedial action and long-term stabilization program. The information presented in this chapter is based on recent environmental monitoring, radiological surveys, hazard characterizations, engineering evaluations, environmental assessment reports, safety analysis reports, environmental statements, and remedial investigation/feasibility studies prepared for the DOE facilities. In addition, cognizant DOE personnel clarified and confirmed the current status of remedial actions.

Remedial actions and long-term stabilization programs currently being planned or implemented comply with the design standard of 20 $pCi/m^2/s$ in 40 CFR Part 192. Since many of these remedial actions are scheduled for completion in the near future, in addition to an assessment of the risks from the current radon emission rates, an assessment is presented for post-remediation emission rates. Post-remediation emission rates are assumed to be the lesser of either 20 $pCi/m^2/s$ or the current emission rate.

10.1 SITE DESCRIPTIONS

10.1.1 The Feed Materials Production Center

The FMPC, near Fernald, Ohio, is a prime contractor site operated by Westinghouse Materials Company of Ohio for the DOE. The primary mission at the FMPC is to produce purified uranium metal and components for use at other DOE facilities. Feed materials include ore concentrates, recycled uranium from spent reactor fuel, and various uranium compounds. Thorium can also be processed at the site. Only minor amounts of radon are released from the production operations conducted at the site. Emissions from these processes are addressed in Chapter 2.

The primary source of radon emissions at the FMPC is pitchblende residues stored in two concrete storage tanks, referred to as silos. These residues resulted from the recovery of uranium from pitchblende ores during World War II. The storage silos are located on the western portion of the site, south of the chemical waste pits and approximately 325 m from the western site boundary (We87, We88).

The residues are estimated to have a radium concentration of 0.2 ppm, equivalent to about 200,000 pCi/g of radium-226. The estimated 11,200 kg of residues contain about 1,760 Ci of radium. The two concrete storage silos were constructed in 1951 and 1952. In 1964, the silos were repaired, and an earth embankment was erected around the silos to provide structural integrity and weather protection, as well as to reduce the radon emissions and the direct radiation from the silos. In 1979, the vents on the silos were sealed to further reduce radon emissions. In 1983, the earth embankment was enlarged.

On July 18, 1986, the DOE and EPA jointly signed a Federal Facility Compliance Agreement (FFCA) (We88). The state of Ohio has also been actively involved in the project effort. In response to the FFCA, the FMPC took action to stabilize the two K-65 waste storage silos by adding temporary 9.14 m diameter domes. A foam covering was added on top of the domes to seal the surface from the weather, insulate the silos from thermal fluctuations, provide more structural integrity, and further prevent radon releases (Bo87, DOE86b, DOE87b).

In 1987, the FMPC prepared a report entitled "Feasibility Investigation for Control of Radon Emission from the K-65 Silos" (Gr87), to evaluate alternatives for the control of radon emissions in response to CERCLA issues. The report determined that the FMPC is within the DOE and EPA guidelines and regulations for the emission of radon, but that additional radon control would be needed if the silos were to crack. The report recommended that the void space in the silos be filled with foam and that weatherproofing be completed after the silos are filled. The current schedule for Remedial Investigation/Feasibility Study (RI/FS) activities calls for the Record of Decision (ROD) to be issued in September of 1990.

The void space has not yet been filled with foam, and the risk estimates presented here do not account for the foam. When the foam is inserted in the dome, the radon emissions will be further reduced, and the risk estimates will be lower (Gr88).

10.1.2 The Niagara Falls Storage Site

The NFSS in Lewiston, New York, is a DOE surplus facility, operated by Bechtel National, Inc. The 77-ha site, part of the former Lake Ontario Ordnance Works, is used solely to store uranium and pitchblende residues.

The residues, which were previously contained in buildings on the site, were consolidated in the Interim Waste Containment Facility (IWCF) at the end of 1986 (Jo87). Details of the consolidation are given in the Annual Environmental Reports (Be87b). The IWCF structure comprises the short-term closure system for the wastes until the long-term management plan is completed.

The IWCF occupies 4 ha of the site, measuring 274 m by 137 m. The structure's outer perimeter is formed by a dike and cutoff wall, each constructed of compacted clay and incorporated into the finished structure. An engineered, compacted clay cover placed immediately over the wastes extends beyond the perimeter dike, completely enclosing the containment structure. This cover is the principal barrier against moisture intrusion and radon emanation. The 0.9-m clay layer is covered with 0.3 m of general soil and 0.15 m of topsoil.

The DOE Record of Decision on long-term disposition of the NFSS was issued in August 1986. The plan selected is long-term, in-place management consistent with the guidance provided in the EPA's regulations governing uranium mill tailings. The plan is described in the Final Environmental Impact Statement, published in April 1986 (DOE86a).

The radon level measurements at the site boundary have decreased over the past few years as a result of remedial actions. The locations monitored in 1986 read between 0.17 and 0.36 pCi/l (average 0.26 pCi/l), including background. The background location averaged 0.31 pCi/l. Mound Labs performed supplemental radon monitoring in 1986 at the site boundary. These values ranged between 0.21 and 0.31 pCi/l (average 0.27 pCi/l), including background. The background location had a reading of 0.22 pCi/l. These values show good agreement with the values obtained by the site. Radon monitoring was also performed beyond the site boundary. The values ranged between 0.20 and 0.35 pCi/l (average 0.25 pCi/l), including background. Background was 0.22 pCi/l. The current radon levels should be lower due to the capping of the IWCF, completed in late 1986 (Be87b)

10.1.3 The Weldon Spring Site

The WSS, near Weldon Spring, Missouri, is a DOE surplus facility The site consists of two physically separate areas, the 89-ha Weldon Spring Chemical Plant (WSCP) and the Weldon Spring Raffinate Pits (WSRP) area, and the 3.6-ha Weldon Spring Quarry (WSQ) area.

The DOE was directed by the Office of Management and Budget to assume custody and accountability for the WSCP from the Department of the Army in November 1984. The control and decontamination of the WSCP, WSRP, and WSQ was designated as a major project by DOE Order 4240.1E dated May 14, 1985. Mk-Ferguson Company assumed control as Project Management

Contractor for the WSS Remedial Action Project on October 1, 1986. Remediation at this site is being pursued under the requirements of CERCLA. The DOE has entered into an agreement with the EPA. A Remedial Investigation/Feasibility Study is in progress, and the Record of Decision is scheduled for 1991.

Like the NFSS, the Weldon Spring Site is used for the storage of uranium and thorium wastes. The raffinate pits area is a remnant of the Weldon Spring Chemical Plant. During the period that the chemical plant was operated for the Atomic Energy Commission, the four raffinate pits, occupying 21 ha of the WSCP and WSRP area, received residues and waste streams from the uranium and thorium processes conducted at the facility. Pits 1 and 2 contain neutralized raffinates from uranium refining operations and washed slag residues from uranium metal production operations. Pits 3 and 4 contain uranium wastes similar to those contained in pits 1 and 2. In addition, they contain thorium-contaminated raffinate solids from processing thorium recycle materials. During decontamination of the chemical plant, drummed wastes and contaminated rubble were disposed of in pit 4. The surface areas, volumes, and contents of the pits are summarized in Table 10-1 (MK86). Surface water (varying in depth with the seasons) always covers the residues in pits 3 and 4. Pits 1 and 2 are usually covered by water as well, but evaporation during the summer months can leave these residues exposed.

The quarry site, located about 6 km southwest of the raffinate pits area, was initially used by the U.S. Army to dispose of TNT-contaminated rubble from the Weldon Spring Ordnance Works. The quarry is a closed basin with surface water within the rims flowing to the quarry floor and to the sump pond. The level of water in the pond varies with precipitation and temperature. There is a storage shed and sampling platform in the sump area. The site is surrounded by a locked 2.1 m fence topped with wire.

The quarry was first used to dispose of radioactive wastes in 1959, when the AEC deposited thorium residues in drums. During 1963 and 1964, approximately 32,000 cubic meters of uranium- and radium-contaminated building rubble, process equipment, and contaminated soil, generated during the demolition of the Destrehan Street Feed Plant in St. Louis, were dumped in the quarry. In 1966, additional drummed and uncontained thorium residues were deposited when process equipment was removed from the WSCP. Additional TNT-contaminated stone and earth, disposed of later in 1966 by the Army, covers these thorium residues. The final deposits to the quarry were made in 1968 and 1969, when the Army's decontamination of the chemical plant generated approximately 4,600 cubic meters of contaminated equipment and rubble. Table 10-2 summarizes the radioactive wastes stored in the quarry (MK86).

The environmental monitoring program for radon consists of 6 locations in the WSRP area, 15 locations in the WSCP area,

6 locations at the WSQ, and 4 offsite locations for background readings. The "1986 Annual Environmental Monitoring Report" (MK86) indicates that the site boundary radon monitors at WSCP (which includes the raffinate pits area) read between 0.18 and 0.49 pCi/1 (average 0.32) including background. The background location read 0.47. The offsite monitors north of the pits and closer than the other background monitor read between 0.22 and 0.36 pCi/1 (average 0.29). The onsite monitors at the raffinate pits read between 0.31 and 0.64 pCi/1 (average 0.46). The onsite monitors at the quarry read between 0.24 and 1.86 pCi/1 (average 0.87) (MK86).

Table 10-1. Characteristics of the four raffinate pits and activity levels of major radionuclides in the currently stored materials.

Characteristic	Pit 1	Pit 2	Pit 3	Pit 4
Year Constructed	1958	1958	1959	1964
Surface Area, ha	0.5	0.5	3.4	6.1
Pit Volume, m^3	14,060	14,060	126,692	337,744
Waste Volume, m^3	13,224	13,224	98,490	42,256
Radionuclide		Activity (pCi/g)		
U-238	710	470	520	620
U-234	810	560	570	610
Th-232	100	120	120	120
Th-230	24,000	24,000	14,000	1,600
Ra-228	850	200	100	60
Ra-226	430	440	460	11

Table 10-2. Estimated volumes of radioactive wastes stored in the Weldon Spring Quarry.

Type of Waste	Date Deposited	Volume (m^3)	Comments
3.8 Percent Thorium Residues	1959	140.1	Drummed residues; volume estimated; most of the residues under water; principal source of radioactivity is Th-232 decay series.
Destrehan St. Plant Demolition Rubble	1963-1964	38,000	Contaminated equipment, building rubble; estimate of uranium and thorium content not available; principal source of radioactivity is U-238 decay series.
3 Percent Thorium Residues	1966	422	Drummed residues; volume estimated; stored above water level; principal source of radioactivity is Th-232 decay series.
Weldon Spring Feed Materials Flant Rubble	1968-1969	4,222	Contaminated equipment, building rubble; uranium and thorium content and radioactivity not available; principal sources of radioactivity are U-238 and Th-232 decay series.
Total		42,784	

10.1.4 The Middlesex Sampling Plant

The MSP, Middlesex, New Jersey, was used by the Manhattan Engineering District and the Atomic Energy Commission between 1943 and 1967 for sampling, weighing, assaying, and storing uranium and thorium ores. The site covers 3.9 ha. After termination of operations in 1967, the site was decontaminated and released to the U.S. Marine Corps for use as a training center. Radiological surveys of the site and nearby private properties discovered widespread contamination from windblown materials and use of material from the site as fill. Both the Middlesex Municipal Landfill (MML), located 0.8 km north-northwest of the MSP, and the MSP were designated for remedial action under FUSRAP.

The cleanup of the MSP, which was completed in 1982, consisted of recovering contaminated soils from offsite properties and removing contaminated soil areas from the site. All materials were consolidated in a storage pile on the southern portion of the site (Fo79).

In 1984, contaminated soils were transported from the MML to MSP for interim storage. The storage pad at MSP was enlarged to accommodate these soils, which were placed on a second pile. Together, the two storage piles occupy about 2.2 ha, or over half of the site. Concrete curbing surrounds the pad to prevent migration of the materials. The top of the storage pile is also covered with a hypalon material to prevent movement of the materials (Be85). In 1986, the remedial actions were completed for the landfill. The volumes of contaminated soils on the MSP storage pads are given in Table 10-3. The concentration of radium-226 in the piles is estimated to be 40 pCi/g (Fr88).

Table 10-3. Volumes of contaminated soil on the MSP storage pads.

Date and Source	Volume (m^3)
1980 (Phase I) MSP Cleanup	7,160
1981 (Phase II) MSP Cleanup	19,564
1984 MML Cleanup (Second Storage Pad)	11,400
1986 MML Cleanup (Extended Second Storage Pad)	12,234
Total on Storage Pads	50,358

Environmental monitoring at the MML site was discontinued after 1987. The certification docket releasing the site for unrestricted use was published in May 1989 (Be89). Environmental monitoring, maintenance, and surveillance will continue at the MSP until all remedial activities are completed. The schedule for remediation of the MSP site calls for site surveillance through 1991, planning, NEPA/CERCLA and design efforts through 1993, and completion of remedial action (excluding certification docket) by the end of 1996.

The environmental monitoring program for radon consists of 20 locations at the MSP. The detectors are located at site and on the site boundary. One detector is located about 16 km from the MSP to measure background levels. The "1986 Annual Environmental Monitoring Report" (Be87a) indicates the site boundary radon monitors read between 0.3 and 1.2 pCi/1, including background, at the MSP. The offsite rate was 2.0 pCi/1. (The offsite location is apparently at a higher radiation level than the site itself.) All levels in 1986, including background, were three times those in 1985. This was observed at other sites in New Jersey and is believed to be due to drier climatic conditions. In a nine-month radon survey conducted by Mound Labs at MSP in 1986 the site boundary detectors ranged between 0.2 and 0.3 pCi/1 (Be87a). The off-site background detector averaged 0.2 pCi/1.

10.1.5 The Monticello Uranium Mill Tailings Pile

The MUMT, located at Monticello, Utah, has been inactive since 1960. About 817,000 MT of uranium mill tailings were impounded in four separate areas covering a total of about 18.6 ha. The mill was purchased by the Federal government in 1948 and operated by the AEC to recover uranium from 1949 to January 1960, when it was permanently shut down. The government owns the tailings site. Uranium ore was processed by both acid and carbonate leaching, and thus the tailings exhibit properties of both of these processes.

The tailings were stabilized in 1961 by grading and leveling and the dikes were made of tailings. The tailings were then covered with about 0.3 m of pit run gravel and dirt, followed by 0.3 m of top soil that was seeded with local vegetation. Currently, there is about 0.15 m of soil on some areas of the pile, and the grass cover is not good. Additional demolition and decontamination activities were conducted in 1974 and 1975 to reduce radiation levels at the site and improve its appearance.

The mill site was accepted into the Surplus Facilities Management Program (SFMP) in 1980. The Monticello Remedial Action Project (MRAP) is specific to the mill site and contaminated peripheral properties. Areas contaminated outside those covered by the MRAP are included under the Monticello Vicinity Properties (MVP) Project.

The DOE has completed the Hazard Ranking System evaluation (score = 52.0). A draft RI/FS was completed in January 1988 for the mill site. Although the mill site is not on the National Priorities List, guidance from the DOE and EPA mandates that contractors are to comply with the requirements of CERCLA and SARA. The DOE, EPA, and the State of Utah have entered into negotiations for an Interagency Agreement under CERCLA Section 120. A Draft Work Plan is undergoing comment. The MRAP Draft Work Plan indicates planned completion of the RI/FS by early 1990 with the ROD to follow shortly thereafter. Remedial activities are expected to begin in 1990 with completion and certification scheduled for around 1995.

The "1986 Environmental Monitoring Report" (Se87) refers to the "Draft Environmental Assessment of Remedial Action - 1985" (Ben85, UN88) as containing onsite and offsite measurements that represent current conditions. Only minor additions of ore have since been made to the pile. The report (Ben85) presents several onsite radon flux measurements and concludes that the EPA standard for flux of 20 $pCi/m^2/s$ is exceeded at each of the four tailings piles.

10.2 BASIS OF THE RISK ASSESSMENT

10.2.1 Emissions

10.2.1.1 Radon Emission Estimates for the FMPC

There is no current information on the flux of radon-222 from the silos at FMPC. Measurements made by Monsanto-Mound in 1984 and 1985 are no longer valid because of the significant changes made to the silos since then (Gr87, We87) The radon releases from the silos were calculated before the 0.1-m foam covering was placed on top of the domes; thus, these calculations are also no longer valid. The latter calculation predicted that 650 Ci of radon-222 would be released each year. Radon concentrations have been measured outside the silos, but the information needed to develop the actual radon emissions from the silos is insufficient (We87, We88, DOE87b).

The current radon source term is estimated, based on the radium content of the residues, the reported areas of the silos, and the calculated radon flux through the concrete domes. This latter estimate was based on relationships presented in Atmospheric Environment (Na85). The radon-222 emissions, after foaming the exterior of the dome, are estimated to be about 2.5 Ci/y. The current estimated emission rate is 85 $pCi/m^2/s$. Assuming that remedial activities reduce the radon emission rate to 20 $pCi/m^2/s$, the emissions would be reduced to 0.6 Ci/y.

10.2.1.2 Radon Emission Estimates for the NFSS

Radon emission estimates are based on the estimated releases presented in the "Closure/Post-Closure Plan for the Interim Waste

Containment Facility at the Niagara Falls Storage Site" (Be86), and the "Final Environmental Impact Statement" (DOE86a). The estimated releases from the current storage facility are 0.25 Ci/y (Be86). This corresponds to a radon emission rate of 0.06 pCi/m^2/s, which is well below the 20 pCi/m^2/s design standard in 40 CFR Part 192.

The releases of radon from the IWCF are not available in terms of flux from the pile. Also, the site boundary data as summarized in Section 10.1.2 are not usable for estimating releases because they are nearly indistinguishable from the background data.

10.2.1.3 Radon Emission Estimates for the WSCP and WSQ

Radon emission estimates are based on DOE's estimated releases (DOE87a). The estimated releases for the current situation (described as Alternative 4, "No Action," in DOE87a) are 29 Ci/y of radon-222 for the WSCP, and 14 Ci/y of radon-222 for the WSQ. The current radon emission rates for both sites, estimated at 2.7 and 3.7 pCi/m^2/s for the WSCP and WSQ respectively, are below the 20 pCi/m^2/s design standard in 40 CFR Part 192.

Measured releases of radon from the WSCP and WSQ are not available in terms of flux from the pits and quarry.

10.2.1.4 Radon Emission Estimates for the MSP

DOE sampled the wastes in the piles in April 1985 and July 1986 (Wa88). The results of these samplings, as noted above, indicate an average of 40 pCi/g of radium-226 (Fr88). Assuming that 1 pCi/g radium-226 results in 1 pCi/m^2/s radon-222 the estimated flux rate is 40 pCi/m^2/s. Given the dimensions of the waste piles, the radon source term is estimated at 25 Ci/y. This estimate gives no credit for any radon attenuation by the hypalon cover over the wastes (Be85). Reduction of the emission rate to 20 pCi/m^2/s would result in a release rate of 13 Ci/y.

The releases of radon at MSP are not available in terms of flux from the interim storage piles.

10.2.1.5 Radon Emission Estimates for the MUMT

Radiation measurements at the site have been made primarily to determine external gamma radiation levels. These levels were reduced by stabilization to a range of 2 to 3 above background levels (author's observation). Radon emission measurements range from 133 to 765 pCi/m^2/s for the four tailings piles, according to the "Draft Environmental Assessment of Remedial Action - 1985" (Ben85) (see Table 10-4). Part of the pile has migrated up to 500 m offsite along Montezuma Creek. The average flux rate of this material is 40 pCi/m^2/s, or 37 Ci/y. DOE estimates the total radon-222 release to be 1,595 Ci/y (Ben85). This emission

rate was assumed to occur from an area of 2.17E+5 m^2 (Fr88). When averaged over all the piles, the current radon emission rate is 228 $pCi/m^2/s$.

Table 10-4. Radon source strength, areas, and radon flux rates at the MUMT.

Tailings Pile	Radon Release (Ci/y)	Area (m^2)	Weighted-Average Area Radon Flux (pCi/m^2 sec)
Acid Pile	500	52,070	312
Carbonate Pile	570	23,657	765
Vanadium Pile	88	16,216	173
East Pile	400	95,746	133
Montezuma Creek West, East, & Central	37	29,000[a]	40
Total	1,595		

(a) Estimated based on total area of 2.17E+5 m^2 (Fr88).

10.2.2 Other Assumptions Used in the Assessment

Meteorological data for each of these sites were obtained from nearby weather stations. Nearby population figures were obtained from DOE reports (Ab84, Gr87, We87, Fo79, DOE87a), and the regional populations were generated from U.S. census tract data from 1980 using the computer code SECPOP. All of the sites were treated as ground-level area sources.

10.3 RESULTS OF THE RISK ASSESSMENT

Exposures and risks to nearby individuals and risks to the regional population were estimated for both pre- and post-remediation radon emission rates. A post-remediation emission rate of the lesser of either 20 $pCi/m^2/s$ radon or the current emission rate was assumed.

10.3.1 Exposures and Risks to Nearby Individuals

The pre-remediation exposures received by individuals living near these sites and their lifetime fatal cancer risks are summarized in Table 10-5. The highest risks are associated with the MUMT, where nearby individuals are estimated to have a 0.1 percent lifetime fatal cancer risk. For the MSP and the WSCP, nearby individuals are estimated to have a lifetime fatal cancer risk of 1 and 2 in 10,000, respectively. At the FMPC and WSQ, the nearby individuals have a risk of less than 1 in 10,000, while at the NFSS the maximum estimated risk is less than 1 in 1 million.

Table 10-5. Estimated exposures and risks to individuals living near DOE radon sites assuming current radon emission rates.

	Initial Flux Rate ($pCi/m^2/s$)	Maximum Rn-222 Concentration (pCi/l)	Maximum Exposure (WL)	Maximum Lifetime Fatal Cancer Risk to Individual	Distance (m)
FMPC	85	5E-4	1.5E-6	2E-6	800
NFSS	6E-2	6E-5	1.8E-7	3E-7	500
WSCP	2.7	5E-2	1.3E-4	2E-4	300
WSQ	3.7	2E-2	5.6E-5	8E-5	300
MSP	40	4E-2	1.0E-4	1E-4	400
MUMT	40	3E-1	9.7E-4	1E-3	900

The post-remediation exposures received by individuals living near these sites and their lifetime fatal cancer risks are summarized in Table 10-6. The radon emission rate for the NFSS, WSCP, and WSQ are currently below 20 $pCi/m^2/s$; therefore, the risks to individuals near these facilities are not shown to change. At the MUMT and the MSP, the nearby individuals have a risk of 1 and 0.8 in 10,000, respectively, while at the FMPC the maximum estimated risk is less than 1 in 1 million.

10.3.2 Risks to the Regional (0-80 km) Populations

The estimated fatal cancers per year in the populations around DOE radon sites, as a result of current emissions and post-remediation emissions, are summarized in Table 10-7, along with the numbers of persons in the population around each site. The emissions from the MSP result in a greater number of fatal cancers per year, even though the releases from the MUMT are a factor of 64 greater than those at the MSP. This is due to the great disparity in the numbers of persons within 80 km of each site. Based on current emissions, the estimated total deaths per year are 7E-2. This is equivalent to one death every 14 years. The estimated post-remediation total deaths per year are 4E-2. This is equivalent to one death every 25 years.

Table 10-6. Estimated exposures and risks to individuals living near DOE radon sites assuming post-remediation radon emission rates.

	Maximum Rn-222 Concentration (pCi/l)	Maximum Exposure (WL)	Maximum Lifetime Fatal Cancer Risk to Individual	Distance (m)
FMPC[a]	1E-4	3.6E-7	5E-7	800
NFSS[b]	6E-5	1.8E-7	3E-7	500
WSCP[c]	5E-2	1.3E-4	2E-4	300
WSQ[d]	2E-2	5.6E-5	7E-5	300
MSP[a]	2E-2	5.4E-5	8E-5	400
MUMT[a]	3E-2	8.5E-5	1E-4	900

(a) Based on 20 $pCi/m^2/s$.
(b) Based on 6E-2 $pCi/m^2/s$.
(c) Based on 2.7 $pCi/m^2/s$.
(d) Based on 3.7 $pCi/m^2/s$.

Table 10-7. Estimated fatal cancers/year to the regional (0-80 km) populations around DOE radon sites for current radon emission rates.

Facility	Population	Fatal Cancers Per Year	
		Current	Post-Remediation
Feed Material Production Center	3,200,000	6E-4	1E-4
Niagara Falls Storage Site	3,800,000	4E-5	4E-5
Weldon Springs Pits & Quarry	2,300,000	1E-2	1E-2
Middlesex Sampling Plant	16,000,000	5E-2	3E-2
Monticello Uranium Mill Tailings	19,000	8E-3	7E-4
Totals[a]	25,300,000	7E-2	4E-2

(a) Totals may not add due to independent rounding.

10.3.3 Distribution of the Fatal Cancer Risk

Tables 10-8 through 10-13 show the distribution of fatal cancer risk in the regional populations around each site for current radon emission rates. Tables 10-14 through 10-16 show the distribution of fatal cancer risk in the regional populations around the FMPC, MSP, and MUMT sites for post-remediation radon emission rates of 20 $pCi/m^2/s$. Post-remediation emission rates are not shown for the NFSS, WSCP, and WSQ sites since their current radon emissions are already less than 20 $pCi/m^2/s$.

Tables 10-17 and 10-18 summarize this information for the entire DOE radon site source category for current and post-remediation emissions, respectively. It should be noted that all of the individuals estimated to have a lifetime fatal cancer risk greater than 0.1 percent reside in the area around the MUMT.

Table 10-8. Estimated distribution of the fatal cancer risk to the regional (0-80 km) population around the FMPC for current radon emission rates.

Risk Interval	Number of Persons	Deaths/y
1E-1 to 1E+0	0	0
1E-2 to 1E-1	0	0
1E-3 to 1E-2	0	0
1E-4 to 1E-3	0	0
1E-5 to 1E-4	0	0
1E-6 to 1E-5	38	9E-7
< 1E-6	3,300,000	6E-4
Totals[a]	3,300,000	6E-4

(a) Totals may not add due to independent rounding.

Table 10-9. Estimated distribution of the fatal cancer risk to the regional (0-80 km) population around the NFSS for current radon emission rates.

Risk Interval	Number of Persons	Deaths/y
1E-1 to 1E+0	0	0
1E-2 to 1E-1	0	0
1E-3 to 1E-2	0	0
1E-4 to 1E-3	0	0
1E-5 to 1E-4	0	0
1E-6 to 1E-5	0	0
< 1E-6	3,800,000	4E-5
Totals[a]	3,800,000	4E-5

(a) Totals may not add due to independent rounding.

Table 10-10. Estimated distribution of the fatal cancer risk to the regional (0-80 km) population around the WSCP for current radon emission rates.

Risk Interval	Number of Persons	Deaths/y
1E-1 to 1E+0	0	0
1E-2 to 1E-1	0	0
1E-3 to 1E-2	0	0
1E-4 to 1E-3	70	1E-4
1E-5 to 1E-4	400	1E-4
1E-6 to 1E-5	27,000	6E-4
< 1E-6	2,300,000	8E-3
Totals[a]	2,300,000	9E-3

(a) Totals may not add due to independent rounding.

Table 10-11. Estimated distribution of the fatal cancer risk to the regional (0-80 km) population around the WSQ for current radon emission rates.

Risk Interval	Number of Persons	Deaths/y
1E-1 to 1E+0	0	0
1E-2 to 1E-1	0	0
1E-3 to 1E-2	0	0
1E-4 to 1E-3	0	0
1E-5 to 1E-4	200	8E-5
1E-6 to 1E-5	4,000	1E-4
< 1E-6	2,300,000	4E-3
Totals[a]	2,300,000	4E-3

(a) Totals may not add due to independent rounding.

Table 10-12. Estimated distribution of the fatal cancer risk to the regional (0-80 km) population around the MSP for current radon emission rates.

Risk Interval	Number of Persons	Deaths/y
1E-1 to 1E+0	0	0
1E-2 to 1E-1	0	0
1E-3 to 1E-2	0	0
1E-4 to 1E-3	200	4E-4
1E-5 to 1E-4	4,000	2E-3
1E-6 to 1E-5	310,000	7E-3
< 1E-6	16,000,000	4E-2
Totals[a]	16,000,000	5E-2

(a) Totals may not add due to independent rounding.

Table 10-13. Estimated distribution of the fatal cancer risk to the regional (0-80 km) population around the MUMT for current radon emission rates.

Risk Interval	Number of Persons	Deaths/y
1E-1 to 1E+0	0	0
1E-2 to 1E-1	0	0
1E-3 to 1E-2	30	6E-4
1E-4 to 1E-3	1,700	5E-3
1E-5 to 1E-4	3,300	1E-3
1E-6 to 1E-5	14,000	9E-4
< 1E-6	180	2E-6
Totals[a]	19,000	8E-3

(a) Totals may not add due to independent rounding.

Table 10-14. Estimated distribution of the fatal cancer risk to the regional (0-80 km) population around the FMPC for post-remediation radon emission rates.

Risk Interval	Number of Persons	Deaths/y
1E-1 to 1E+0	0	0
1E-2 to 1E-1	0	0
1E-3 to 1E-2	0	0
1E-4 to 1E-3	0	0
1E-5 to 1E-4	0	0
1E-6 to 1E-5	0	0
< 1E-6	3,300,000	1E-4
Totals[a]	3,300,000	1E-4

(a) Totals may not add due to independent rounding.

Table 10-15. Estimated distribution of the fatal cancer risk to the regional (0-80 km) population around the MSP for post-remediation radon emission rates.

Risk Interval	Number of Persons	Deaths/y
1E-1 to 1E+0	0	0
1E-2 to 1E-1	0	0
1E-3 to 1E-2	0	0
1E-4 to 1E-3	0	0
1E-5 to 1E-4	2,000	9E-4
1E-6 to 1E-5	60,000	2E-3
< 1E-6	16,000,000	2E-2
Totals[a]	16,000,000	3E-2

(a) Totals may not add due to independent rounding.

Table 10-16. Estimated distribution of the fatal cancer risk to the regional (0-80 km) population around the MUMT for post-remediation radon emission rates.

Risk Interval	Number of Persons	Deaths/y
1E-1 to 1E+0	0	0
1E-2 to 1E-1	0	0
1E-3 to 1E-2	0	0
1E-4 to 1E-3	30	5E-5
1E-5 to 1E-4	1,000	4E-4
1E-6 to 1E-5	14,000	2E-4
< 1E-6	0	8E-5
Totals[a]	19,000	7E-4

(a) Totals may not add due to independent rounding.

Table 10-17. Estimated distribution of the fatal cancer risk to the regional (0-80 km) population around all DOE radon sites for current radon emission rates.

Risk Interval	Number of Persons	Deaths/y
1E-1 to 1E+0	0	0
1E-2 to 1E-1	0	0
1E-3 to 1E-2	32	6E-4
1E-4 to 1E-3	2,000	6E-3
1E-5 to 1E-4	8,000	3E-3
1E-6 to 1E-5	360,000	9E-3
< 1E-6	28,000,000	5E-2
Totals[a]	28,000,000	7E-2

(a) Totals may not add due to independent rounding.

Table 10-18. Estimated distribution of the fatal cancer risk to the regional (0-80 km) population around all DOE radon sites for post-remediation radon emission rates.

Risk Interval	Number of Persons	Deaths/y
1E-1 to 1E+0	0	0
1E-2 to 1E-1	0	0
1E-3 to 1E-2	0	0
1E-4 to 1E-3	100	2E-4
1E-5 to 1E-4	4,000	1E-3
1E-6 to 1E-5	92,000	3E-3
< 1E-6	28,000,000	4E-2
Totals[a]	28,000,000	4E-2

(a) Totals may not add due to independent rounding.

10.4 SUPPLEMENTARY CONTROL OPTIONS AND COST

For each of the five sites discussed in this chapter, three similar supplementary control options required to reduce the radon emissions to levels of 20, 6, and 2 pCi/m^2/s, and their associated costs, were evaluated. At each site, the current storage configuration was assumed (e.g., the four mill tailings piles at Monticello were not moved into one larger pile). The depth of earth required to reduce radon emissions to the three levels mentioned above, and the associated costs, were then calculated using the equations and unit cost for earth covers presented in Appendix B. It should be noted that the wastes at the NFSS and the FMPC might require disposal as high-level wastes at a facility such as the WIPP. However, for this evaluation, it is assumed that these wastes remain at the current sites.

10.4.1 The Feed Materials Production Center

The radon emission rate from the two silos, using the estimated 2.5 Ci/y source term, is calculated to be 85 pCi/m^2/s. The depths of earth required to reduce the emissions to 20, 6, and 2 pCi/m^2/s are 2.1, 2.3, and 3.3 m, respectively. Based on the current configuration, it was assumed that only the exposed domes would have to be covered, and a 3:1 slope was used. The estimated costs of the coverings are $56,000, $79,000, and $83,000, to meet the levels of 20, 6, and 2 pCi/m^2/s.

10.4.2 The Niagara Falls Storage Site

The current radon emission rate from the IWCF is 0.25 Ci/y, equivalent to a radon flux of 0.6 pCi/m^2/s. Since the current

emission rate is below all of the proposed options, there are no costs associated with meeting any of the alternatives.

10.4.3 The Weldon Spring Site

The radon emission flux from the present raffinate pits at the WSCP is 2.7 $pCi/m^2/s$, while the flux from the WSQ is 3.7 $pCi/m^2/s$. Both the pits and quarry are covered with water, at various levels depending upon the season and variations in the rainfall rate. For the purpose of determining the costs of achieving the alternative levels, it was assumed that both the pits and the quarry would be dry. The estimated radon flux from the dry pits was calculated based on the information presented in Table 10-1. For pits 1, 2, and 3, the estimated flux is 460 $pCi/m^2/s$, while for pit 4, it is 11 $pCi/m^2/s$.

The depths of earth required to reduce the emission rates to 20, 6, and 2 $pCi/m^2/s$ for pits 1, 2, and 3 are 1.6, 2.3, and 2.8 m, respectively. For pit 4, no cover is needed to achieve 20 $pCi/m^2/s$, while 0.3 and 0.9 m would be required to meet the two lower options. The estimated costs for all four pits is $1.73 million to achieve 20 $pCi/m^2/s$, $2.96 million to achieve 6 $pCi/m^2/s$, and $4.26 million to achieve 2 $pCi/m^2/s$.

At this time, insufficient information is available to develop the costs of achieving the alternative levels for the WSQ.

10.4.4 The Middlesex Sampling Plant

The radon emission rate from the interim storage facility is estimated to be 40 $pCi/m^2/s$. The depths of earth required to reduce this to 20, 6, and 2 $pCi/m^2/s$ are 0.8, 1.4, and 2.1 meters, respectively. The estimated costs of the earthen covers are $419,000, $720,000, and $997,000, respectively.

10.4.5 The Monticello Uranium Mill Tailings Piles

The current radon emission rate at the MUMT, averaged over all of the piles, is 228 $pCi/m^2/s$. The depths of earth required to reduce the radon flux to 20, 6, and 2 $pCi/m^2/s$ are 2.4, 3.4, and 4.4 m, respectively. The costs to achieve these levels are estimated to be $26.8 million, $39.2 million, and $50.2 million, respectively. Included in these estimates is the cost of rip-rap, needed to provide long-term erosion control and to prevent misuse of the tailings.

The costs to reduce the radon flux to 20, 6, and 2 $pCi/m^2/s$ at all the DOE radon sites are summarized in Table 10-19.

10.4.6 Effectiveness of the Control Options

Covering the DOE radon sources to reduce the current emissions to 20, 6, and 2 pCi/m^2/s reduces the maximum individual risk from 1E-3 to 2E-4, 2E-4, and 1E-4, respectively. It will also reduce the deaths per year estimates to the regional populations within 80 km from 7E-2 to 4E-2, 2E-2, and 1E-2, respectively.

Table 10-19. Summary of capital costs to reduce radon emissions from DOE radon sites.

	Capital Cost ($ 1988 million)		
Site	Radon Flux 20 pCi/m^2/s	Radon Flux 6 pCi/m^2/s	Radon Flux 2 pCi/m^2/s
FMPC	0.056	0.079	0.083
NFSS	0	0	0
WSQ	1.7	3.0	4.3
MSP	0.42	0.72	1.0
MUMT	27	39	50

10.5 REFERENCES

Ab84 Abramiumk, I.N., et al., "Monticello Remedial Action Project Site Analysis Report," GJ-10, Bendix Field Engineering Corporation, Grand Junction, CO, December 1984.

Be85 Bechtel National, Inc., "Technical Specification for Furnishing and Installing Stockpile Cover, Middlesex Sampling Plant, Middlesex, New Jersey," Specification 17-14-C-05, September 5, 1985.

Be86 Bechtel National, Inc., "Closure/Post-Closure Plan for the Interim Waste Containment Facility at the Niagara Falls Storage Site," DOE/OR/20722-85, Oak Ridge, TN, May 1986.

Be87a Bechtel National, Inc., "Middlesex Sampling Plant and Middlesex Municipal Landfill, Annual Site Environmental Report, Calendar Year 1986," DOE/OR/20722-149, Oak Ridge, TN, May 1987.

Be87b Bechtel National, Inc., "Niagara Falls Storage Site, Annual Site Environmental Report, Calendar Year 1986," DOE/OR/20722-150, Oak Ridge, TN, June 1987.

Be89 Bechtel National, Inc., "Certification Docket for the Remedial Action Performed at the Middlesex Sampling Plant in Middlesex, New Jersey in 1984 and 1986," May 1989.

Ben85 Bendix Field Engineering Corp., "Draft Environmental Assessment of Remedial Action at the Monticello Uranium Mill Tailings Site, Monticello, Utah," DOE-EA, Grand Junction, CO, 1985.

Bo87 Boback, M.W., et al., "History of FMPC Radionuclide Discharges," FMPC-2082, Special, UC-11, Feed Materials Production Center, Westinghouse Materials Company of Ohio, Cincinnati, OH, May 1987.

DOE86a U.S. Department of Energy, "Final Environmental Impact Statement, Long-Term Management of the Existing Radioactive Wastes and Residues at the Niagara Falls Storage Site," DOE/EIS-0109F, April 1986.

DOE86b U.S. Department of Energy, "Investigation of April 25, 1986, Radon Gas Release from Feed Materials Production Center, K-65 Silos, by DOE Incident Investigation Board," DOE/OR-877, June 27, 1986.

DOE87a U.S. Department of Energy, "Draft Environmental Impact Statement, Remedial Action at the Weldon Spring Site," DOE/EIS-0117D, February 1987.

DOE87b U.S. Department of Energy, Office of Environment, Safety, and Health, and Office of Environmental Audit, "Environmental Survey Preliminary Report, Feed Materials Production Center, Fernald, Ohio," March 1987.

EPA84 U.S. Environmental Protection Agency, "Background Information Document for Final Rules, Volume II, Appendix C, Radon Emissions from Department of Energy- and Nuclear Regulatory Commission-Licensed Facilities," EPA 520/1-84-022-2, Washington, DC, October 1984.

Fo79 Ford, Bacon & Davis Utah, Inc., "Engineering Evaluation of the Former Middlesex Sampling Plant and Associated Properties, Middlesex, New Jersey," FBDU 230-001 and FBDU 230-005, Salt Lake City, UT, July 1979.

Fr88 Frangos, T.G., U.S. Department of Energy, attachment 4 of written communication to T. McLaughlin, USEPA, presenting recommendations concerning the 40 CFR Part 61 Subpart H rulemaking, December 19, 1988.

Gr87 Grumski, J.T., "Feasibility Investigation for Control of Radon Emissions from the K-65 Silos, Feed Materials Production Center, Westinghouse Materials Company of Ohio," July 30, 1987.

Gr88 Grumski, J.T., and Shanks, P.A., "Completion Report, K-65 Interim Stabilization Project, Exterior Foam Application/Radon Treatment System Operation, Revision 1," April 1988.

Jo87 Jones, M.G., et al., "Performance Monitoring Report for the Niagara Falls Storage Site Waste Containment Structure," DOE/OR/20722-159, prepared for the Department of Energy, Bechtel National, Inc., Oak Ridge, TN, July 1987.

MK86 MK-Ferguson Company and Jacobs Engineering Group, Inc., "Weldon Spring Site, Annual Environmental Monitoring Report, Calendar Year 1986," St. Charles, MO.

Na85 Nazaroff, W.W, et al., "Radon Transport Into a Detached One-Story House With a Basement," Atmospheric Environment, Vol. 19, #1, pp. 31-46, Great Britain, 1985.

Re88 Reafsnyder, J.A., Department of Energy, Oak Ridge Operations, written communication to W. Britz, SC&A, Inc., June 21, 1988.

Se87 Sewell, M., and Spencer, L., "Environmental Monitoring Report on Department of Energy Facilities at Grand Junction, Colorado, and Monticello, Utah, Calendar Year 1986," UNC/GJ-HMWP-2, UNC, Grand Junction, CO, March 1987.

UN88 UNC Technical Services, Inc., Grand Junction, CO, written communication to W. Britz, SC&A, Inc., March 9, 1988.

Wa88 Wallo, A. III, Department of Energy, Office of Nuclear Energy, written communication to W. Britz, SC&A, Inc., June 16, 1988.

We87 Westinghouse Materials Company of Ohio, "Feed Materials Production Center, Environmental Monitoring Annual Report for 1986," FMPC-2076, Special, UC-41, Cincinnati, OH, April 30, 1987.

We88 Westinghouse Materials Company of Ohio, "Feed Materials Production Center, Environmental Monitoring Annual Report for 1987," FMPC-2135, Special, UC-41, Cincinnati, OH, April 30, 1988.

11. UNDERGROUND URANIUM MINES

11.1 GENERAL DESCRIPTION

In conventional uranium mining operations, ore is removed from the ground in concentrations of 0.1 to 0.2 percent U_3O_8 or 280 to 560 μCi of uranium-238 per metric ton of ore. Since the uranium-238 in the ore is normally present in near secular equilibrium with its decay products, these ores also contain about equal amounts of each member of the uranium-238 decay series.

After mining, the ores are shipped to a uranium mill to separate the uranium and produce the product U_3O_8. Radioactive emissions to air from uranium mines and mills consist of radionuclide-bearing dust and radon-222 gas.

Conventional uranium mining operations include both underground and open pit mines. In 1987, conventional mining techniques accounted for about 63 percent of total U.S. uranium production (Pi88a). (The health impact of open pit mines is assessed in Chapter 12.)

In 1982, 139 underground mines were operating in the United States (DOE83). However, during the past six years, uranium production and the number of uranium mines in the United States have declined sharply. Currently, only 13 underground uranium mines are producing ore (Section 23, Mt. Taylor, eight UMETCO Minerals Corporation mines, and three breccia-pipe mines). In addition, two underground mines (Sheep Mountain No. 1 and Schwartzwalder) are on standby. The production of U_3O_8 by conventional mining methods fell from 20.6 million pounds in 1982 to only 7.8 million pounds in 1987 (Pi88a). The principal causes of this reduction were a decline in the price of U_3O_8 ($40 per pound in 1980 to the current $15 per pound) and the increasing competition from foreign suppliers (EPA83a, Pi88a).

A list of the currently operating mines is presented in Table 11-1. Although on standby status, the Schwartzwalder mine is included because it continues to operate its ventilation system during exploration activities and releases radon-222 to the air. If the outcome of the current explorations is favorable, it will resume production. Also, Sheep Mountain No. 1 may be expected to reopen if there is a sufficient increase in the market price of U_3O_8 (Pi89). The expected life of these mines and their ore production rates are included in the table. Only the Mt. Taylor mine in New Mexico is expected to operate over an extended period. The three breccia-pipe mines are not expected to operate for more than about six years (Pi88a). Thus, underground uranium mines are present in five western states, but it is likely that uranium mining will be conducted in fewer states during the next decade.

Table 11-1. Currently operating underground uranium mines in the United States.

State	Mine Name	Company	Type[a]	Expected Life (y)	Current Ore Production Rate (MT/d)[b]
Arizona	Kanab North	Energy Fuels Nuclear, Inc.	Breccia-pipe	6	270-360[c]
Arizona	Pigeon	Energy Fuels Nuclear, Inc.	Breccia-pipe	6	270-360[c]
Arizona	Pinenut	Energy Fuels Nuclear, Inc.	Breccia-pipe	3	270-360[c]
Colorado	Calliham	UMETCO Minerals Corp.	Modified Room and Pillar[d]	(e)	(e)
Colorado	Deremo-Snyder	UMETCO Minerals Corp.	Modified Room and Pillar[d]	(e)	280[f]
Colorado	King Solomon	UMETCO Minerals Corp.	Modified Room and Pillar[d]	(e)	350[f]
Colorado	Nil	UMETCO Minerals Corp.	Modified Room and Pillar[d]	(e)	50[f]
Colorado	Schwartzwalder	Cotter Corp.	Modified Room and Pillar with Vein Structure	Standby[g]	0

(a) The types of underground mines are discussed in Section 11.1.1.
(b) MT/d - metric tons per day; 1 short ton = 0.907 metric ton.
(c) Predicted production.
(d) Assumed but unconfirmed.
(e) Information not available.
(f) Based on Jo89 and 260 production days per year. In some cases, quantities may reflect earlier rates rather than the current production rates.
(g) Exploration is in progress.
(h) Mine placed on standby in April 1989. Ore production prior to closing was based on producing 110,000 lbs U_3O_8 from 0.21% grade ore during the five months prior to the mine closing (Pi89).

Source: Pi88a

Table 11-1. Currently operating underground uranium mines in the United States (continued).

State	Mine Name	Company	Type[a]	Expected Life (y)	Current Ore Production Rate (MT/d)[b]
Colorado	Sunday	UMETCO Minerals Corp.	Modified Room and Pillar[d]	(e)	200[f]
Colorado	Wilson-Silverbell	UMETCO Minerals Corp.	Modified Room and Pillar[d]	(e)	90[f]
New Mexico	Mt. Taylor	Chevron Resources Co.	Modified Room and Pillar	20	544
New Mexico	Section 23	Homestake Mining Co.	Modified Room and Pillar	1.25	68
Utah	La Sal	UMETCO Minerals Corp.	Modified Room and Pillar[d]	(e)	160[f]
Utah	Snowball-Pandora	UMETCO Minerals Corp.	Modified Room and Pillar[d]	(e)	54[f]
Wyoming	Sheep Mountain #1	U.S. Energy Co.	Random Drifting	5	220[h]

(a) The types of underground mines are discussed in Section 11.1.1.
(b) MT/d - metric tons per day; 1 short ton = 0.907 metric ton.
(c) Predicted production.
(d) Assumed but unconfirmed.
(e) Information not available.
(f) Based on Jo89 and 260 production days per year. In some cases, quantities may reflect earlier rates rather than the current production rates.
(g) Exploration is in progress.
(h) Mine placed on standby in April 1989. Ore production prior to closing was based on producing 110,000 lbs U_3O_8 from 0.21% grade ore during the five months prior to the mine closing (Pi89).

Source: Pi88a

11.1.1 Process Description

Fifteen underground uranium mines are included in this assessment. Included are the Mt. Taylor and Section 23 mines which utilize the modified room and pillar method of underground mining; the Schwartzwalder mine which uses the modified room and pillar method in conjunction with vein structure mining; the Sheep Mountain No. 1 mine which uses random drifting with short cross-cut drifts; and the Pigeon, Kanab North, and Pinenut mines which apply a different mining technique to recover the vertical breccia-pipe deposits. Although unconfirmed, UMETCO Minerals Corporation is believed to use the modified room and pillar method to remove ore from their mines. Irrespective of the mining method, the principal radioactive effluent in the mine ventilation air is radon-222 which is released during mining operations.

11.1.1.1 The Modified Room and Pillar Method

In this method, a large diameter main entry shaft is drilled to a level below the ore body. A haulage way is then established underneath the ore body. Vertical raises are driven up from the haulage way to the ore body. Development drifts are driven along the base of the ore body connecting with the vertical raises. Mined ore is hauled along the development drifts to the vertical raises and gravity fed to the haulage way for transport to the main shaft and hoisting to the surface.

Ventilation air generally enters the mine through the main shaft and is vented through one or more shafts installed at appropriate distances along the ore body. Typical ventilation flow rates are on the order of 200,000 to 400,000 cfm.

11.1.1.2 Vein Structure Mining

When ore deposits follow faults, vein structure mining is often applied, as at the Schwartzwalder mine. This involves a combination of methods including shrinkage and sublevel stoping for vertical veins and open stoping with random pillars for inclined and horizontal veins. Ore, broken by drilling and blasting, is gravity fed through draw cones to the haulage level and moved out through the shaft or horizontal adits. Most of the mined-out stopes are interconnected; however, bulkheads and air doors are extensively used throughout the mine to control air flow.

11.1.1.3 Breccia-Pipe Mining

Breccia-pipe deposits of uranium ore are circular, chimney-like masses of highly fragmented rock mineralized at various levels from solutions precipitating uranium and other minerals. Each breccia-pipe is separate and discrete and when exploited, becomes an individual mine.

A single, large shaft is driven vertically outside the breccia-pipe to a depth exceeding the deposit. A horizontal haulage drift extends from the shaft to beneath the breccia-pipe. Ore, broken by drilling and blasting, falls to the haulage drift below where it can be removed. Horizontal drifts are constructed at regular intervals from the shaft to the ore deposit to provide access to the ore and ventilation. A large, ovate, chimney-like void extending hundreds of feet high remains after mining is completed.

Mine ventilation air is forced by surface fans through lined boreholes to the bottom level of the mine and then diverted to each level. Exhaust air at the Pigeon and Pinenut mines is diverted out a 2.6-m diameter horizontal duct centered 1.5 m above ground surface. Due to the proximity of the Kanab North ore body to the Kanab Creek Canyon, all mine exhaust is discharged through a 3.05 m X 4.58 m horizontal adit in the canyon wall, about 280 m below the canyon rim.

11.1.2 Existing Control Technology

The only technology presently in use to control the emissions of radon-222 from underground mines is the bulkheading of mined-out areas. Permanently installed bulkheads are presently used in all operating mines except the breccia-pipe mines. This technology was initially used in reducing radon and radon progeny in the mine atmosphere and, thus, exposure to miners. Regulations delineating the requirements for bulkheading were promulgated under 40 CFR 61, Subpart B, on April 17, 1985. However, the effectiveness of bulkheads in reducing radon emissions from underground mines is much less than earlier estimates projected (EPA85). It is now believed unlikely that any of the operating mines can achieve any significant additional reduction in radon-222 emissions by the use of bulkheads (see Section 11.4.1).

11.2 BASIS OF THE EXPOSURE AND RISK ASSESSMENT

11.2.1 Radon-222 Emissions

Radon-222 is the radionuclide emitted from underground uranium mines that causes the greatest health risk. The major source of radon-222 emissions to air is the mine vents through which the ventilation air is exhausted. Radon-222 emissions from these vents are highly variable and depend upon many interrelated factors including: ventilation rate, ore grade, production rate, age of mine, size of active working areas, mining practices, and several other variables.

In addition to the mine vents, radon-222 is emitted to air from several aboveground sources at an underground uranium mining operation. These sources are the ore, sub-ore, and waste rock storage piles, as well as the loading and dumping of these materials. The Pacific Northwest Laboratory has estimated the

radon-222 emissions from these sources to be about 2 to 3 percent of the emissions from the vents (Ja80). The EPA has estimated the emissions from the aboveground sources to be about 10 percent of mine vent emissions (see Table 11-2).

The aboveground sources also emit radionuclides to air as particulates. The particulate emissions result from ore dumping and loading operations, wind erosion of storage piles, and vehicular traffic. The EPA has estimated that about 2E-2 Ci/y of uranium-238 and 3E-4 Ci/y of thorium-232 and each of their decay products would be emitted into the air at a large underground mine (EPA83b). An assessment of the health risks from these emissions showed that the risks from the particulate emissions were much smaller (a factor of 100 times less) than the risks from radon-222 emissions (EPA83b). Therefore, the health risk assessment presented in the subsequent sections of this chapter will be limited to radon-222 emissions from the mine exhaust vents.

Table 11-2. Estimated annual radon-222 emissions from underground uranium mining sources (EPA83b).

Source	Average Large Mine[a] (Ci/y)
Underground	
Mine vent air	3,400
Aboveground	
Ore loading and dumping	15
Sub-ore loading and dumping	5
Waste rock loading and dumping	0
Reloading ore from stockpile	15
Ore stockpile exhalation	53
Sub-ore pile exhalation	338
Waste rock pile exhalation	3
TOTAL	3,829

(a) Ore grade = 0.1 percent U_3O_8. Annual production of ore and sub-ore = 2 X 10^5 MT, and waste rock = 2.2 X 10^4 MT.

Table 11-3 presents the parameters describing radon-222 emissions at the 15 assessed underground uranium mines. Measured radon-222 concentrations in mine ventilation exhaust air were available for only the Section 23, Mt. Taylor, and Schwartzwalder mines. Only the radon decay product concentrations, in terms of working levels (WL), had been measured in ventilation exhaust air

Table 11-3. Radon-222 concentrations and annual release rates in mine ventilation exhaust air.

Mine	Exhaust Vent	Exhaust Rate, cfm	Radon in Exhaust Air, pCi/l	Annual Radon Release, Ci/y[a]
Section 23	1	48,381	8,085	1,728
	2	45,959	17,541	3,562
	3	44,426	534	105
	4	15,950	2,968	209
	5	16,000	9,488	671
	6	36,250	3,755	601
	7	28,640	2,173	275
	8	39,656	4,026	705
	9	17,973	3,510	279
	10	44,528	1,928	379
	11	20,599	6,388	116
	12	Unknown	30	50
	13	18,327	13,241	214
TOTAL		376,700		8,894
Mt. Taylor	1	563,000	260	2,180
Schwartzwalder	1	81,200	1,527	1,847
	2	85,000	1,419	1,796
	3	67,100	1,268	1,267
	4	13,400	10	2
	5	103,200	958	1,473
TOTAL		349,900		6,385
Kanab North	1	200,000	550[b]	1,640
Pigeon	1	265,000	650[b]	2,560
Pinenut	1	43,000	550[b]	350
Sheep Mountain # 1	14	13,000	205[b]	40
	173-49	22,000	100[b]	33
	162-60	43,000	15[b]	10
	146-65	43,000	123[b]	79
	146-46	43,000	13[b]	8
TOTAL		164,000		170

(a) All mine releases, except those for Section 23 and the UMETCO mines (Jo89), are based on continuous operation.
(b) Based on WL measurements in exhaust air and an equilibrium fraction of radon decay products to radon of 0.20.
(c) Obtained from Jo89. Lists total exhaust vents and portals at mine.
(d) Total estimated exhaust rate from all vents at mine (Jo89).
(e) Based on 2080 hours per year operation (Jo89).
(f) Based on 4160 hours per year operation (Jo89).

Table 11-3. Radon-222 concentrations and annual release rates in mine ventilation exhaust air (continued).

Mine	Exhaust Vent	Exhaust Rate, cfm	Radon in Exhaust Air, pCi/l	Annual Radon Release, Ci/y[a]
King Solomon	13[c]	880,000[d]	650[b]	2,020[e]
Sunday	12[c]	680,000[d]	650[b]	3,120[f]
Deremo-Snyder	11[c]	420,000[d]	650[b]	960[e]
Wilson-Silverbell	7[c]	345,000[d]	650[b]	790[e]
La Sal	5[c]	535,000[d]	650[b]	2,460[f]
Snowball-Pandora	4[c]	635,000[d]	650[b]	2,920[f]
Calliham	1[c]	115,000[d]	650[b]	260[e]
Nil	3[c]	300,000[d]	650[b]	690[e]

(a) All mine releases, except those for Section 23 and the UMETCO mines (Jo89), are based on continuous operation.
(b) Based on WL measurements in exhaust air and an equilibrium fraction of radon decay products to radon of 0.20.
(c) Obtained from Jo89. Lists total exhaust vents and portals at mine.
(d) Total estimated exhaust rate from all vents at mine (Jo89).
(e) Based on 2080 hours per year operation (Jo89).
(f) Based on 4160 hours per year operation (Jo89).

at the other 12 mines. These working level concentrations, in conjunction with information on the radon-radon decay product equilibria, were used to estimate the radon-222 concentrations in the mine exhaust air at the mines reporting working-level concentrations.

The concentration of radon-222 progeny measured in the exhaust vents at the Pigeon and Kanab North mines were 1.3 WL and 1.1 WL, respectively. Using these concentrations with an assumed equilibrium fraction of 0.20, believed to be reasonable considering the ventilation characteristics of these mines and the half-lives of the radon-222 decay products, radon-222 concentrations of 650 pCi/l and 550 pCi/l were estimated for the exhaust air at the Pigeon and Kanab North mines, respectively. No radioactivity measurements were available from the Pinenut mine. For this mine, the radon-222 concentration is assumed to be equal to that of the Kanab North mine, 550 pCi/l.

Mine exhaust rates and working-level concentrations were not provided for individual exhaust vents at the eight UMETCO Minerals Corporation mines. Rather, total mine exhaust

parameters were provided by the company (Jo89). Using the company's estimated working-level concentrations of 1.3 WL for each mine and assuming an equilibrium fraction of 0.20, the radon-222 concentration in the exhaust air from each mine was estimated to be 650 pCi/l.

The measured working-level concentrations listed below were used with an assumed equilibrium fraction (0.20) to estimate the radon-222 concentration in the mine air from each exhaust vent of the Sheep Mountain No. 1 mine.

Vent No.	Average WL (Pi89)
14	0.41
173-49	0.20
162-60	0.03
146-65	0.245
146-46	0.025

The annual release rates of radon-222, the source terms, are given for each mine in the last column of Table 11-3. These estimated annual emission rates were calculated by multiplying the concentrations by the annual volume of air exhausted. The resulting emission rates are expressed in Ci/y. For example, the radon-222 emission rate for the Mt. Taylor mine is obtained by the following expression:

$$\text{Emission Rate (Ci/y)} = 260\ \text{pCi/l} \times 28.316\ \text{l/ft}^3 \times 563{,}000\ \text{ft}^3\text{/min} \times 5.26 \times 10^5\ \text{min/y} \times 10^{-12}\ \text{Ci/pCi}$$

$$= 2{,}180\ \text{Ci/y}.$$

The annual release rates at the Schwartzwalder, Section 23, and Sheep Mountain No. 1 mines are the sums of the release rates at the 5, 13, and 5 vent clusters, respectively. The annual radon-222 emissions from underground uranium mines are estimated to range from about 170 Ci/y to a maximum of 8,900 Ci/yr. The total emissions from all 15 mines are approximately 35,400 Ci/y.

11.2.2 Health Impact Assessment

This section contains an assessment of the risk of cancer caused by radon-222 emissions from underground uranium mines. The health impact assessment addresses the following specific topics:

1. working level exposure and the lifetime fatal cancer risk to the maximum exposed individual from radon-222 at each underground uranium mine; and

2. the number of fatal cancers committed per year in the regional population (the total number of people who reside within 80 km of a mine) at each underground mine due to radon-222.

All lung cancers resulting from the inhalation of radon-222 progeny are considered fatal.

The location of the maximum exposed individual at each mine was estimated by analyzing onsite visit reports (Pi88a, Pi89), company reports (Jo89), and U.S. Geological Survey maps. The AIRDOS-EPA (Mo79) and DARTAB (Be81) codes were used to estimate the exposure to radon-222 and the increased chance of lung cancer for individuals who reside at these selected locations. The radon-222 decay product equilibrium fractions at these residences were determined as a function of the distance from the mine vents.

Collective risks for the regional population due to radon-222 were calculated from the annual collective exposures (person WLM) using AIRDOS-EPA (Mo79) and DARTAB (Be81) codes. The population distribution within 80 km of each mine was determined using the computer program SECPOP (At74), which uses 1980 census data to compute the population in each annular sector.

Collective exposures to radon-222, expressed in person WLM, were estimated for each mine by multiplying the estimated radon-222 progeny concentration (WL) in each annular sector by the population in that sector and by the conversion factor 51.56 WLM/y per WL. The cumulative WL exposure of each population segment was adjusted using a radon progeny equilibrium fraction that is related to the distance from the mine vent to the population segment. The locations of individual exhaust vents were not available for the UMETCO Minerals Corporation mines. For these eight mines, longitude/latitude locations of the "mine complex" were used to determine these distances (Sa89). The parameters used in the AIRDOS-EPA code for each underground mine are listed in Appendix A.

The location of the maximum exposed individual is presented as the distance, m, from the mine ventilation exhaust vent. A single discharge point was assumed for the multiple vented mines, Schwartzwalder, Sheep Mountain No. 1, and Section 23. It was located approximately in the center of the multiple vents with a bias toward those with larger emissions. The mine ventilation exhaust vents are described in Section 11.4.4. Vents that are horizontally oriented were all assigned 1-m release heights.

11.3 RESULTS OF THE EXPOSURE AND RISK ASSESSMENT

11.3.1 Risks to Nearby Individuals

The highest individual risks for each of the 15 assessed underground uranium mines are listed in Table 11-4 in the order of decreasing risk. Included for each mine is the location of the individual with respect to the distance from the mine ventilation exhaust vent and the radon-222 concentration and working-level exposure at that location. Maximum lifetime individual risks ranged from about 3E-6 at the Pinenut mine near

Table 11-4. Estimated exposures and risks to individuals living near underground uranium mines.

Mine/Location	Maximum Radon Concentration (pCi/l)	Maximum Exposure (WL)	Maximum Lifetime Fatal Cancer Risk to Individual	Distance[a] (meters)
La Sal - Near La Sal, UT	1.0E+0	3.1E-3	4E-3	800
Deremo-Snyder - Near Egnar, CO	4.1E-1	1.2E-3	2E-3	800
Snowball-Pandora - Near La Sal, UT	2.6E-1	9.1E-4	1E-3	2,000
Schwartzwalder - 13 km NW Golden, CO	2.5E-1	8.3E-4	1E-3	1,400
Calliham - Near Egnar, CO	2.6E-1	7.6E-4	1E-3	500
Section 23 - 50 km N Grants, NM	5.0E-2	3.0E-4	4E-4	12,800
King Solomon - Near Uravan, CO	6.2E-2	2.6E-4	4E-4	4,000
Wilson-Silverbell - Near Egnar, CO	7.0E-2	2.5E-4	3E-4	2,000
Sunday - Near Naturita, CO	5.1E-2	2.4E-4	3E-4	6,300
Nil - Paradox Valley, CO	1.1E-2	5.4E-5	7E-5	6,300
Pigeon - 24 km S Fredonia, AZ	6.4E-3	4.5E-5	6E-5	24,000
Mt. Taylor - 50 km NE Grants, NM	4.1E-3	2.7E-5	4E-5	15,000
Kanab North - 30 km SSW Fredonia, AZ	2.6E-3	1.8E-5	2E-5	30,000
Sheep Mountain No. 1 - 12 km S Jeffrey City, WY	1.1E-3	4.7E-6	6E-6	5,200
Pinenut - 53 km SSW Fredonia, AZ	2.8E-4	2.0E-6	3E-6	53,000

(a) Distance from the exhaust vent to the maximum exposed individual.

Fredonia, Arazona to a high of 4E-3 at the La Sal mine near La Sal, Utah. The magnitude of the risk is most often controlled by either the source term or the distance and direction of the individual's residence from the mine vent. The larger risks estimated for some UMETCO Minerals Corporation mines are due not only to small distances to the nearby individuals, but also to the arbitrary positioning of the nearby individual in the predominant downwind direction from the mine. This was done because of the absence of directional information for nearby individuals at these mines and probably overestimated the risk to the maximum exposed individual in most cases.

The individual risks estimated for underground uranium mines in the 1984 EPA assessment (EPA85) were significantly higher than those estimated here. The primary reason for this decrease is the depressed condition of the industry which has resulted in many mines closing and large numbers of people moving from these regions. Since many of the people living near the mines moved away, distances between mines and populations have increased. For example, at the time of the earlier assessment, many individuals lived within 500 m of a mine vent. Now, only one individual lives within 500 m of a mine vent, and only four live within 1,000 m. However, one of these individuals (located 700 m SW of the Mt. Taylor mine) is not at maximum risk due to the height (20 m) of the exhaust stack, plume buoyancy, and the very low wind frequency (0.9 percent) in the direction of that individual.

11.3.2 Risks to the Regional Populations

The collective risks of fatal lung cancer resulting from radon-222 emissions occurring in the regional 80-km population around each underground uranium mine are listed in Table 11-5 in the order of decreasing risk. Also listed are the 1980 census populations within the 80-km regions. The highest collective risk occurs in the densely populated Denver/Golden, Colorado, area where it is estimated that a fatal lung cancer will occur about every year due to the radon-222 emissions from the Schwartzwalder mine. The collective risks within regional populations at the other mines are much lower, primarily because fewer people live within the 80-km regions. For example, it is estimated that radon-222 released from the Section 23 and King Solomon mines, those falling second and third in the ordered listing, will result in only one fatal lung cancer every 20 and 200 years, respectively.

An additional output of the DARTAB computer code provides the frequency distribution of lifetime fatal cancer risks around each mine. It predicts the number of people in each of a series of lifetime risk intervals and the number of cancer deaths that occur annually within each risk interval. The individual distributions were combined into an overall distribution of lifetime fatal cancer risks around all underground uranium mines. The

Table 11-5. Estimated committed fatal cancers per year due to radon-222 emissions from underground uranium mines.

Mine and Location	1980 Population Within 80 km	Committed Fatal Cancers Per Year (0-80 km)
Schwartzwalder 13 km NW Golden, CO	1,800,000	7E-1
Section 23 50 km N Grants, NM	65,000	5E-2
King Solomon - Near Uravan, CO	67,000	5E-3
Snowball-Pandora - Near La Sal, UT	21,000	4E-3
Sunday - Near Naturita, CO	24,000	4E-3
La Sal - Near La Sal, UT	21,000	3E-3
Mt. Taylor 50 km NE Grants, NM	50,000	3E-3
Pigeon 24 km S Fredonia, AZ	7,800	2E-3
Nil - Paradox Valley, CO	55,000	2E-3
Deremo-Snyder - Near Egnar, CO	30,000	1E-3
Kanab North 30 km SSW Fredonia, AZ	11,000	1E-3
Wilson-Silverbell - Near Egnar, CO	30,000	1E-3
Calliham - Near Egnar, CO	30,000	4E-4
Sheep Mountain No. 1 - 12 km S Jeffrey City, WY	5,200	2E-4
Pinenut 53 km SSW Fredonia, AZ	8,200	2E-4

distribution is shown in Table 11-6. The distribution reflects the number of deaths expected to occur annually within the 0-80 km population listed due to radon-222 emissions from underground uranium mines. For example, about 2,200,000 people are at risk within the 15 regions due to their exposure to radon-222 from all underground uranium mines, and within this population, about 0.8 fatal lung cancers are expected to occur per year. Of the predicted deaths per year caused by emissions of radon-222 from underground mines, about 90 percent are attributable to the Schwartzwalder mine.

Table 11-6. Estimated distribution of the fatal cancer risk caused by radon-222 emissions from all underground uranium mines.

Risk Interval	Number of Persons	Deaths/y
1E-1 to 1E+0	0	0
1E-2 to 1E-1	0	0
1E-3 to 1E-2	5	1E-4
1E-4 to 1E-3	86,000	2E-1
1E-5 to 1E-4	1,600,000	6E-1
1E-6 to 1E-5	450,000	3E-2
< 1E-6	51,000	4E-4
Totals	2,200,000	8E-1

11.4 SUPPLEMENTARY CONTROL OPTIONS AND COSTS

A number of methods to control radon emissions from underground uranium mines have been evaluated. These are: (1) bulkheading; (2) use of a sealant coating on exposed ore surfaces; (3) activated carbon adsorption of radon from contaminated mine air; (4) extending the height of the mine air exhaust stacks; and (5) other control technologies. Also considered are the design and development of new underground mines in a way that will limit the diffusion of radon into the mine air. Brief descriptions of these technologies and their effectiveness with costs, in 1988 dollars, are presented below.

11.4.1 Bulkheading

This method reduces radon emissions by sealing off (bulkheading) openings to worked-out areas of the mine. The radon emanating from these areas of the mine will decay in the sealed-off area rather than be discharged into the outside air. A bulkhead is an air-restraining barrier, usually consisting of a timber or metal stud frame covered with timber, expanded metal lath, plywood, or other sheet products. Concrete or cinder blocks are also sometimes used. A sealant (polyurethane, shotcrete,

etc.) is usually applied to the structure and to the joints between the structure and the rock to form a continuous seal.

Airtight bulkheads can seldom be achieved. Most bulkheads leak to some extent because the mine is under a negative pressure causing air flow through the bulkhead and the fractured and porous rock near the bulkhead. Since the radon in the sealed area behind a bulkhead will build up to relatively high concentrations (i.e., tens of thousands of picocuries per liter), it is necessary to prevent or minimize any leakage of air from behind the bulkhead into the working areas of the mine. Any such leakage could significantly increase the radon decay product concentration to which the miners are exposed. Therefore, it is often necessary to maintain a negative differential pressure behind the bulkhead to prevent leakage of contaminated air into the active mine airways. This negative pressure is achieved by bleeding (i.e., removing) air from behind the bulkhead into an exhaust airway. For bulkheads to be effective in reducing radon emissions to aboveground air, however, the amount of air bleed necessary to maintain an adequate differential across the bulkhead must be managed. The smaller the air bleed, the more radon will decay behind the bulkhead rather than being released above ground.

Several theoretical evaluations of the effectiveness of bulkheads in reducing radon emissions to air from active underground uranium mines have been conducted (Ko80, B184). One study of a model mine (Ko80) estimated that bulkheading would achieve a 14 percent reduction in radon emissions at a cost of $0.15 per pound of uranium oxide ($0.45 per ton of 0.15 percent uranium ore). In this study, each stope is bulkheaded upon completion of the mining activity with a 50 percent daily air volume bleed. Another study of 13 case mines (B184) estimated that bulkheading could reduce radon emissions by about 60 percent for a few cents per pound of uranium oxide. In this study, 80 percent of the surface area is sealed off with a 10 percent daily air volume bleed.

Both of these studies are based on extensive bulkheading of the mines and a controlled air bleed behind the bulkhead. None of the existing mines can meet the conditions needed to achieve radon emission reductions through the use of bulkheads. Some of the factors involved are the following:

1. many worked-out areas of the mines are used as ventilation passageways or emergency escapeways and cannot be sealed off;

2. many worked-out areas are not accessible for bulkhead installation and maintenance because of safety hazards;

3. for the breccia-pipe mines, the mining method precludes the use of bulkheads; and

4. for all of these mines, limiting the amount of air removed from behind the bulkheads is not practical.

11.4.2 Sealant Coatings

This method reduces radon emissions by preventing the radon from entering mine air by sealing the exposed mine surfaces. These sealants include a large group of industrial polymer chemical products which form thick adhesive coatings. A two- or three-layer system has been shown to produce the most favorable results, with shotcrete as the base coating (B184, Ko80, Fr81a).

Laboratory studies have shown these sealants to be very effective in reducing radon emanations from uranium ore surfaces. However, the presence of pinholes and the difficulty in applying a perfect coating on the surface considerably reduce the effectiveness of the sealants.

Field studies in inactive test mines have demonstrated that some rock surfaces can be sealed to reduce radon emanations by up to 75 percent (Ko80). No field studies have been conducted to measure the effectiveness of sealants in reducing radon emissions in active mines.

Several theoretical studies of the effectiveness of sealants in reducing radon emissions from active uranium mines have been conducted (Ko80, B184). One study of a model underground uranium mine (Ko80) estimated that sealants could achieve about an 11 percent reduction in radon emissions at a cost of $0.63 per pound of uranium oxide ($1.90 per ton of 0.15 percent uranium ore). Only the development drifts are sealed in this model mine at a unit cost of about $0.88 per ft^2.

In another study of 13 case mines (B184), it was estimated that sealants could achieve about a 56 percent reduction in the radon emissions at a cost of $0.53- $3.75 per pound of uranium oxide. In this study, 80 percent of the mine surface was considered to be sealed at a unit cost of $1.03 per ft^2.

For reasons discussed below, it was not practical for any of the existing mines to apply sealants to 80 percent of the mine surfaces. The first study (Ko80) is believed to provide a more realistic estimate of the potential radon emission reductions achievable in some mines by applying sealants.

Although sealants have been shown to reduce radon emanations from rock surfaces under experimental conditions, the use of this technique to reduce radon emissions from active underground uranium mines is significantly limited for these reasons:

1. Sealants cannot be applied to many areas of the existing mines because:

   (a) active drifts or stopes cannot be sealed due to the mining activities;

(b) most mined-out areas cannot be entered due to safety hazards; and

(c) floors, haulageways, and areas with significant vehicular traffic cannot be effectively sealed.

2. Pinholes in the sealant will act as a conduit for the radon and reduce some of the effectiveness of the sealant. Perfect bonding cannot be assured, and radon will migrate behind the skin of the sealant and escape through a pinhole or along the rib flow junction.

3. Application on rock surfaces is limited because of hot rock surfaces and water inflow through the rock surfaces.

4. Geological conditions are not conducive to good sealant application. Rock stress is often high, causing the rock to crack and slabs to break away from roof and sides.

For these reasons, the use of sealants to reduce radon in existing underground uranium mines is not widely applicable. The method is extremely limited and can achieve only small radon reductions.

11.4.3 Adsorption on Activated Carbon

The bleeder pipes used to achieve negative pressure behind bulkheads (see Section 11.4.1) release significant quantities of radon into the exhaust ventilation system of a mine. A possible solution to the problem is to integrate an activated carbon trap into the system that removes the radon before it enters the mine ventilating system.

Several activated carbon systems have been investigated (Ko80, B184). In general, air from the bleeder pipe is first filtered to remove dust particles and radon decay products and then passed through an activated carbon trap. A dehumidifier can be placed in the system before the carbon trap if the humidity in the mine is high. The carbon trap is periodically regenerated by passing hot air through the trap, collecting the eluted radon in a second carbon trap. The efficiency of the system is very dependent on moisture, temperature, and the flow rate of air through the trap. About 100 CFM is generally considered an upper flow rate limit (Ko80).

A theoretical evaluation of the effectiveness of activated carbon systems in reducing radon emissions from underground uranium mines has been conducted (Ko80). The study, based on a model mine, estimated that the use of activated carbon traps on bulkhead bleeder pipes would achieve a 35 percent reduction in the radon emissions from the mine at a cost of $1.92 per pound of uranium oxide ($5.75 per ton of 0.15 percent uranium ore). In this case study, 12.5 carbon systems were operated, each treating 100 CFM of air.

The use of activated carbon systems to remove radon from all air exhausted from an underground uranium mine was also theoretically evaluated (B184). The study assumed that seventy-two 5,000 CFM carbon adsorption units would be required to accommodate a mine ventilation rate of 360,000 CFM. It was estimated that these systems would result in an annual cost of over $55 million or about $100 per pound of uranium oxide ($300 per ton of 0.15 percent uranium ore). The enormous size of this system, the radiation potential resulting from the buildup of radon and its decay products on the traps, and the costs render this approach infeasible.

Although activated carbon adsorption applied to bulkhead bleeder pipes appears technically feasible, none of the existing mines are using these systems to reduce radon emissions. These systems have not been employed because of the numerous disadvantages associated with them. Some of these disadvantages are:

1. The systems require continuous attention by trained personnel.

2. Skilled operators, usually not available in mining communities, are required to operate and maintain the systems.

3. High humidity in mine atmospheres significantly reduces the effectiveness of the carbon systems.

4. Radiation hazards may be caused by the decay of radon and its progeny that is adsorbed on the charcoal.

5. Safety problems due to the interruption of electrical service or system malfunction can increase the radon concentration in the mine air.

6. No commercial units applicable to mine atmospheres are available, and further development work on the systems is required.

Although activated carbon adsorption systems may be a feasible technology for removing radon from bulkhead bleeder tubes, the systems have not been shown to be practical in an underground mine atmosphere for technical, safety, and economic reasons.

11.4.4 Mine Ventilation Exhaust Stacks

Increasing the vertical heights of mine ventilation exhaust stacks will reduce the ground-level radon concentration near the stacks (Dr80). The exposure to radon and, therefore, risk to people living relatively near the exhaust vents can be reduced by increasing the height of the ventilation exhaust stacks. The ventilation exhaust vents at the 15 assessed underground mines are described in Table 11-7. Except for the Mt. Taylor mine, which has a 20-m stack, mines presently release emissions at

about 1 to 2 m. In order to implement this control technology, mines with multiple stacks must consider extending more than one stack. Also, mines that vent horizontally to a canyon wall have additional problems in extending their exhaust stacks vertically.

Table 11-7. Current mine ventilation exhaust vents.[a]

Mine	Number of Exhaust Vents	Vent Orientation	Diameter of Vent (m)	Approximate Vent Height (m)
Pigeon	1	Horizontal	2.44	1.5
Pinenut	1	Horizontal	2.44	1.5
Kanab North	1	Horizontal	2.44[b]	Canyon Wall
Section 23	4	Vertical	1.22	2.3
	9	Vertical	1.83	2.3
Mt. Taylor	1	Vertical	7.32	20
Schwartzwalder	4	Horizontal	2.44[b]	1-2[c]
	1	Vertical	2.44	1-2
Sheep Mountain # 1	5	Horizontal	0.91-1.52	2.4
King Solomon	13	Vertical	2.44	1.2
Sunday	12	Vertical	2.44	1.2
Deremo-Snyder	11	Vertical	2.44	1.2
Wilson-Silverbell	7	Vertical	2.44	1.2
Calliham	1	Vertical	2.44	1.2
Nil	3	Vertical	1.83	1.2
La Sal	5	Vertical	2.14	1.2
Snowball-Pandora	4	Vertical	2.14	1.2

(a) Exhaust vent data from Pi88a, Pi89, Jo89, and Sa89.
(b) These are actually rectangular vents having an effective area approximately the same as a 2.44 diameter opening.
(c) Two vents exhaust to a canyon wall.

To determine the benefit of higher emission release heights, the reduction in the radon concentration and risk was evaluated at the location of the maximum exposed individual at each operating underground uranium mine for exhaust stack heights of 10 m, 20 m, 30 m, and 60 m. The results of this study are presented in Table 11-8. Also listed in the table are the radon concentrations and risks estimated using the current (baseline) stack heights (see Table 11-7) and assuming all are vented vertically.

The percent reductions in the radon concentration and lifetime individual risk at each release height are similar at each mine, except at the Sheep Mountain No. 1 mine. The maximum exposed individual was located at a much greater distance at the higher release heights which allowed for more dilution (reducing the radon concentration) but provided a longer time, producing a higher progeny/radon equilibrium fraction. Increasing the release heights had only a limited effect on the cumulative risks to the regional populations. The percent reduction in the radon concentration and lifetime individual risk with increasing release height was greatest when the distance from the mine to the maximum exposed individual was small and least when the distance was large.

To illustrate this, the range and average percent reduction determined for each release height at 14 of the underground mines are shown in Table 11-9. The mines are divided into three categories depending upon the distance from the mines to the maximum exposed individual: small distances (1,400 m or less); long distances (24,000 m and greater); and intermediate distances. The Mt. Taylor mine was not included in this summary since the mine currently operates with a 20-m stack height. These results show that increasing the height of the mine exhaust stack is very effective in reducing the radon concentration and risk when small distances exist between the mine and the individual. However, the effectiveness decreases with distance and becomes of marginal value at long distances.

Table 11-8. Estimated lifetime fatal cancer risk to the maximum exposed individual and the committed fatal cancers per year due to radon-222 emissions from underground uranium mines as a function of vent stack height.

Stack Height, m	Location of Individual, m	Concentration of Radon-222, pCi/l	Lifetime Risk to Individual	Committed Fatal Cancers Per Year (0-80 km)
		Schwartzwalder Mine		
Baseline[a]	1,400	2.5E-1	1.2E-3	7.1E-1
10	1,400	2.1E-1	9.6E-4	6.9E-1
20	1,400	1.4E-1	6.4E-4	6.5E-1
30	1,400	8.7E-2	4.0E-4	5.9E-1
60	1,400	3.1E-2	1.4E-4	3.9E-1
		Section 23 Mine		
Baseline[b]	12,800	4.9E-2	4.1E-4	4.7E-2
10	12,800	4.5E-2	3.8E-4	4.4E-2
20	12,800	3.9E-2	3.2E-4	3.8E-2
30	12,800	3.2E-2	2.6E-4	3.2E-2
60	12,800	1.5E-2	1.2E-4	1.7E-2
		Pigeon Mine		
Baseline[a]	24,000	6.4E-3	6.1E-5	2.2E-3
10	24,000	6.3E-3	5.9E-5	2.1E-3
20	24,000	5.9E-3	5.6E-5	2.0E-3
30	24,000	5.3E-3	5.0E-5	1.8E-3
60	24,000	3.2E-3	3.0E-5	1.2E-3
		Kanab North Mine		
Baseline[a]	30,000	2.6E-3	2.4E-5	1.3E-3
10	30,000	2.6E-3	2.4E-5	1.2E-3
20	30,000	2.4E-3	2.3E-5	1.2E-3
30	30,000	2.2E-3	2.0E-5	1.1E-3
60	30,000	1.3E-3	1.2E-5	6.8E-4
		Mt. Taylor Mine		
Baseline[c]	15,000	4.1E-3	3.6E-5	3.1E-3
10	15,000	5.4E-3	4.8E-5	4.0E-3
20	15,000	4.1E-3	3.6E-5	3.1E-3
30	15,000	3.1E-3	2.7E-5	2.5E-3
60	15,000	1.5E-3	1.3E-5	1.4E-3

(a) Baseline height - 1.0 meters
(b) Baseline height - 2.0 meters
(c) Baseline height - 20 meters

Table 11-8. Estimated lifetime fatal cancer risk to the maximum exposed individual and the committed fatal cancers per year due to radon-222 emissions from underground uranium mines as a function of vent stack height (continued).

Stack Height, m	Location of Individual, m	Concentration of Radon-222, pCi/l	Lifetime Risk to Individual	Committed Fatal Cancers Per Year (0-80 km)
		Pinenut Mine		
Baseline[a]	53,000	2.8E-4	2.7E-6	1.7E-4
10	53,000	2.8E-4	2.6E-6	1.6E-4
20	53,000	2.6E-4	2.5E-6	1.5E-4
30	53,000	2.4E-4	2.3E-6	1.4E-4
60	53,000	1.5E-4	1.4E-6	9.1E-5
		Sheep Mountain No. 1		
Baseline[b]	5,200	1.1E-3	6.5E-6	1.7E-4
10	12,650	7.6E-4	6.3E-6	6.4E-4
20	12,650	7.1E-4	5.9E-6	1.5E-4
30	12,650	6.3E-4	5.2E-6	1.4E-4
60	12,650	3.6E-4	3.0E-6	7.8E-5
		King Solomon		
Baseline[a]	4,000	6.2E-2	3.5E-4	5.4E-3
10	4,000	5.9E-2	3.4E-4	5.3E-3
20	4,000	5.1E-2	2.9E-4	5.0E-3
30	4,000	4.1E-2	2.3E-4	4.6E-3
60	4,000	1.6E-2	8.9E-5	2.9E-3
		Sunday		
Baseline[a]	6,300	5.1E-2	3.3E-4	3.5E-3
10	6,300	4.9E-2	3.2E-4	3.4E-3
20	6,300	4.4E-2	2.9E-4	3.3E-3
30	6,300	3.7E-2	2.4E-4	3.0E-3
60	6,300	1.7E-2	1.1E-4	1.9E-3
		Deremo-Snyder		
Baseline[a]	800	4.1E-1	1.7E-3	1.3E-3
10	800	2.9E-1	1.2E-3	1.3E-3
20	800	1.3E-1	5.4E-4	1.2E-3
30	800	6.0E-2	2.5E-4	1.1E-3
60	800	1.4E-2	6.0E-5	6.8E-4

(a) Baseline height - 1.0 meters
(b) Baseline height - 2.0 meters
(c) Baseline height - 20 meters

Table 11-8. Estimated lifetime fatal cancer risk to the maximum exposed individual and the committed fatal cancers per year due to radon-222 emissions from underground uranium mines as a function of vent stack height (continued).

Stack Height, m	Location of Individual, m	Concentration of Radon-222, pCi/l	Lifetime Risk to Individual	Committed Fatal Cancers Per Year (0-80 km)
		Wilson-Silverbell		
Baseline[a]	2,000	7.0E-2	3.4E-4	1.1E-3
10	2,000	6.4E-2	3.1E-4	1.0E-3
20	2,000	4.8E-2	2.3E-4	9.9E-4
30	2,000	3.2E-2	1.5E-4	9.0E-4
60	2,000	9.1E-3	4.4E-5	5.6E-4
		Calliham		
Baseline[a]	500	2.6E-1	1.1E-3	3.6E-4
10	500	1.3E-1	5.2E-4	3.5E-4
20	500	3.9E-2	1.6E-4	3.3E-4
30	500	1.9E-2	7.5E-5	3.0E-4
60	500	3.7E-3	1.5E-5	1.8E-4
		Nil		
Baseline[a]	6,300	1.1E-2	7.3E-5	1.8E-3
10	6,300	1.1E-2	7.1E-5	1.8E-3
20	6,300	9.8E-3	6.4E-5	1.7E-3
30	6,300	8.3E-3	5.4E-5	1.6E-3
60	6,300	3.8E-3	2.5E-5	1.0E-3
		La Sal		
Baseline[a]	800	1.0E+0	4.4E-3	3.4E-3
10	800	7.4E-1	3.1E-3	3.3E-3
20	800	3.3E-1	1.4E-3	3.1E-3
30	800	1.5E-1	6.5E-4	2.8E-3
60	800	3.6E-2	1.5E-4	1.8E-3
		Snowball-Pandora		
Baseline[a]	2,000	2.6E-1	1.3E-3	4.0E-3
10	2,000	2.4E-1	1.1E-3	3.9E-3
20	2,000	1.8E-1	8.6E-4	3.7E-3
30	2,000	1.2E-1	5.7E-4	3.4E-3
60	2,000	3.4E-2	1.6E-4	2.2E-3

(a) Baseline height - 1.0 meters
(b) Baseline height - 2.0 meters
(c) Baseline height - 20 meters

Table 11-9. Effectiveness of various stack heights.

BaseLine Height to:	Percent Reduction in Radon Concentration		Percent Reduction in the Individual Lifetime Risk	
	Range	Average	Range	Average
Less Than or Equal to 1,400 m to Maximum Exposed Individual[a]				
10 m	16-50	30	20-53	33
20 m	44-85	66	47-85	67
30 m	65-93	82	67-93	82
60 m	88-99	95	88-99	95
Between 1,400 m and 24,000 m to Maximum Exposed Individual[b]				
10 m	0-31	9	3-15	6
20 m	11-36	23	9-34	20
30 m	25-54	39	20-56	37
60 m	65-87	74	54-88	72
Greater Than or Equal to 24,000 m to Maximum Exposed Individual[c]				
10 m	0- 2	1	0- 4	2
20 m	7- 8	8	4- 8	6
30 m	14-17	15	15-18	17
60 m	46-50	49	48-51	50

(a) Includes the Deremo-Snyder, Calliham, La Sal, and Schwartzwalder mines.
(b) Includes all other mines except the Mt. Taylor mine.
(c) Includes the Pigeon, Kanab North, and Pinenut mines.

The costs to extend the mine ventilation exhaust stacks at the 15 underground uranium mines to heights of 10 m, 20 m, 30 m, and 60 m have been estimated (Pi88b). The cost estimates, based on the general framing plan shown in Figure 11-1, include rolled steel plates to be used as ventilation duct extensions, structural steel shapes for supports, and concrete for the foundations. Composite costs used were $1.80 per pound for structural steel, finished, fabricated, and erected, and $150 per cubic yard for concrete, delivered and placed. A detailed description of the basis for the cost estimate is given in Appendix 11-A.

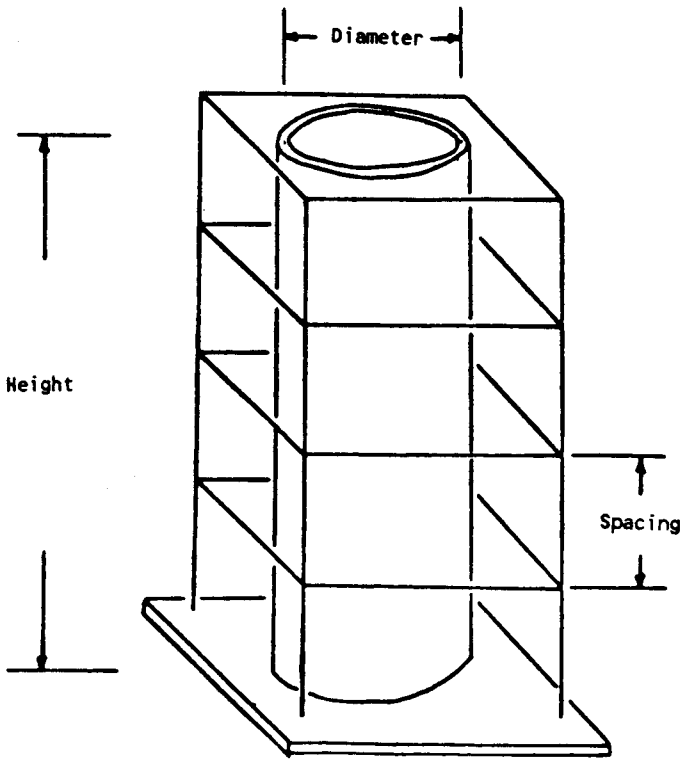

Figure 11-1. General framing plan of a mine ventilation exhaust stack.

Because each mine has different exhaust characteristics that affect the costs, primarily the number of stacks and their diameters (see Table 11-7), costing was performed for each individual mine. The estimated costs, in 1988 dollars, to extend the heights of the exhaust stacks at each mine are given in Table 11-10.

Table 11-10. Estimated costs (dollars) to extend the heights of the ventilation exhaust stacks at each underground uranium mine (Pi88b).

Mine	Stack Height			
	10 Meter	20 Meter	30 Meter	60 Meter
Section 23	222,500	507,400	950,700	1,890,900
Schwartzwalder[a]	93,900	241,500	439,800	874,200
Pigeon	31,200	80,500	146,600	291,400
Pinenut	31,200	80,500	146,600	291,400
Kanab North[a]	31,200	80,500	146,600	291,400
Mt. Taylor	(b)	(b)	425,500[c]	1,055,200[c]
Sheep Mountain No. 1	70,000	159,500	307,500	612,000
King Solomon	405,600	1,046,500	1,905,800	3,788,200
Sunday	374,400	966,000	1,759,200	3,496,800
Deremo-Snyder	343,200	885,500	1,612,600	3,205,400
Wilson-Silverbell	218,400	563,500	1,026,200	2,039,800
Calliham	31,200	80,500	146,600	291,400
Nil	55,500	126,600	234,900	467,100
La Sal	124,300	306,800	562,300	1,117,500
Snowball-Pandora	99,400	245,400	449,800	894,000
Totals	2,132,000	5,370,700	10,260,700	20,606,700

(a) Estimates do not include converting vents that exhaust horizontally through canyon walls.
(b) These estimates are not applicable since the current exhaust stack height is 20 m.
(c) These estimates may be somewhat high if any part of the present 20-m structure can be used.

There are two cost items not included in Table 11-10 (Pi88b). The estimates do not include the loss of revenue caused by the shutdown during the installation of the extended stacks. It is estimated that it would require one to two months for these conversions, resulting in an additional cost of $0.9 to $1.5 million dollars in lost revenue (mining expenses will continue near normal during this period). These costs will depend on the period of shutdown and the production rate of the mine. The second cost item not included in the above estimate is the expense of installing larger fans, which may be needed to redistribute the air flow underground.

Although this control alternative does not reduce the emissions of radon from underground uranium mines, it is effective in reducing the exposure and lung cancer risks to the nearby individuals from these emissions. It also, to a lesser extent, reduces the exposures and cumulative risks to the regional populations. This control alternative is achievable with current technology.

11.4.5 Other Control Technologies

Backfilling is the practice of filling mined-out areas of an underground mine with waste rock which provides ground support in the mine, disposal of unwanted material without hoisting it to the surface, and a reduction in the mine ventilation requirements (Fr81b). Backfilling is practiced at the underground mines, except at the breccia-pipe mines where the mining method prevents its use. However, because underground mining methods reduce the ratio of waste to ore mined (only 5 to 20 percent of the mined tonnage is available for backfilling), this control alternative will require that material be obtained from an aboveground source and transported underground, e.g., classified mill tailings or surface sands. In a mine test of one stope, the amount of radon released from the stope was reduced 84 percent after the stope was 90 percent backfilled (Fr81b). In a study of 13 case mines (B184), it was estimated that backfilling with classified mill tailings and surface sand to the extent that would achieve an 80 Bpercent reduction in radon emissions would cost $0.85 to $9.90 per pound of uranium oxide. Therefore, it was concluded: (1) backfilling is less cost-effective than bulkheading to reduce radon emissions from a mine; (2) vast abandoned areas of the mines are inaccessible to backfilling due to unsafe rock conditions; (3) many of the worked-out areas are used as ventilation passageways or emergency escapeways and cannot be backfilled; and (4) the mining methods used in breccia-pipe mines preclude the use of backfilling.

Theoretically, a positive mine pressure will force the radon in mine air through the ore body or surrounding area to the surface and, if conditions are right, the radon will decay before reaching the surface (Ko80, Fr81a). However, this practice will not be applicable at all mines, as it is critically dependent on the surrounding geology. An "air" sink is required to accept the

radon, and if the rock surrounding the mine is impermeable, the radon concentration in the mine air will quickly return to previous levels. This process has shown limited success in reducing radon concentrations in a mine atmosphere, but the reduction in mine emissions was not determined nor have costs for the process been estimated (Fr81a). After a thorough review of this technology, the Bureau of Mines concluded that a positive pressure condition is ineffective in reducing radon emissions from underground uranium mines (B184).

Experiments using strong oxidizing agents to convert radon to a chemical form that can be absorbed on scrubbers or absorption beds have been performed (Fr81a). However, the corrosive and toxic nature of these reactants makes their use in mines impractical and, most likely, unacceptable. Other techniques such as cryogenic condensation, gas centrifugation, molecular sieves, and semipermeable membranes have been reviewed as possible techniques for reducing radon emissions from underground mines, but were found to be impractical and too costly (Ho84, B184).

11.4.6 New Underground Mines

The control of radon emissions from mature underground uranium mines has been only marginally successful, and supplementary control technologies, as seen above, have not significantly reduced radon emissions from these mines. The manner in which these mines were developed and are operated is not optimal for radon control. Although it is not likely that new mines will be starting in appreciable numbers, a positive change in the present depressed condition of the industry could initiate new mine development. If this should occur, new mines can be developed and operated in a way that would minimize, without undue burden, the emission of radon to the atmosphere.

Extensive pre-operational planning is imperative in order to minimize radon emissions from new underground mines. Planning is necessary to insure adequate access to the ore and the achievement of an efficient arrangement of openings for optimal ventilation distribution simultaneously with a minimal release of radon into the mine atmosphere. The life cycle of a mine can be divided into five stages: exploration, construction, underground development, ore extraction, and abandonment. Procedures to minimize radon emissions should be considered during each mining stage. Preplanning should also consider using retreat mining wherever possible with breccia-pipe, roll-blanket, roll-front, and vein-type uranium deposits.

11.4.7 Conclusions

Considerable effort has been made to find technologies that would effectively control the emissions of radon from underground uranium mines. Numerous alternatives have been reviewed and tested, but none appear to meet the conditions necessary to

achieve adequate radon emission reductions. Bulkheads have been partially successful but cannot be used to reduce radon emissions further. Extending the height of mine ventilation exhaust stacks, however, does effectively reduce the exposure and risk to nearby individuals. Health risks resulting from radon emissions can be most effectively controlled at future mines by following a carefully planned program in the development and operation of the mine.

11.5 REFERENCES

At74 Athey, T.W.; Tell, R.A.; and Janes, D.E., "The Use of an Automated Data Base in Population Exposure Calculations," from Population Exposures, Health Physics Society, CONF-74018, October 1974.

Be81 Begovich, C.L.; Eckerman, K.F.; Schlatter, E.C.; Ohr, S.Y.; and Chester, R.O., "DARTAB: A Program to Combine Airborne Radionuclide Environmental Exposure Data with Dosimetric and Health Effects Data to Generate Tabulations of Predicted Health Impacts," ORNL-5692, Oak Ridge National Laboratory, Oak Ridge, TN, August 1981.

Bl84 Bloomster, C.H.; Jackson, P.O.; Dirks, J.A.; and Reis, J.W., "Radon Emissions From Underground Uranium Mines," Draft Report, Pacific Northwest Laboratory, 1984.

DOE83 Department of Energy, "Statistical Data of the Uranium Industry," GJO-100(83), Grand Junction, CO, January 1983.

Dr80 Droppo, J.G.; Jackson, P.O.; Nickola, P.W.; Perkins, R.W.; Sehmel, G.A.; Thomas, C.W.; Thomas, V.W.; and Wogman, N.A., "An Environmental Study of Active and Inactive Uranium Mines and Their Effluents," Part I, Task 3, EPA Contract Report 80-2, EPA, Office of Radiation Programs, Washington, DC, August 1980.

Dr84 Droppo, J.G., "Modeled Atmospheric Radon Concentrations From Uranium Mines," Draft Report, Pacific Northwest Laboratory, PNL-52-39, September 1984.

EPA83a Environmental Protection Agency, "Regulatory Impact Analysis of Final Environmental Standards for Uranium Mill Tailings at Active Sites," EPA 520/1-83-010, Office of Radiation Programs, Washington, DC, September 1983.

EPA83b Environmental Protection Agency, "Potential Health and Environmental Hazards of Uranium Mine Wastes," EPA 520/1-83-007, Office of Radiation Programs, Washington, DC, June 1983.

EPA85 Environmental Protection Agency, "Background Information Document - Standard for Radon-222 Emissions from Underground Uranium Mines, " EPA 520/1-85-010, Office of Radiation Programs, Washington, DC, April 1985.

Fr81a Franklin, J.C., "Control of Radiation Hazards in Underground Mines," Bureau of Mines, Proceedings of International Conference on Radiation Hazards in Mining: Control, Measurement, and Medical Aspects, Colorado School of Mines, Golden, CO, October 1981.

Fr81b Franklin, J.C. and Weyerstad, K.D., "Radiation Hazards in Backfilling with Classified Uranium Mill Tailings," Proceedings of the Fifth Annual Uranium Seminar, Albuquerque, NM, September 20-23, 1981.

Ho84 Hopke, P.K.; Leong, K.H.; and Stukel, J.J., "Mechanisms for the Removal of Radon from Waste Gas Streams," EPA Cooperative Agreement CR806819, UILU-ENG-84-0106, Advanced Environmental Control Technology Research Center, Urbana, IL, March 1984.

Ja80 Jackson, P.O.; Glissmeyer, J.A.; Enderlin, W.I.; Schwendiman, L.C.; Wogman, N.A.; and Perkins, R.W., "An Investigation of Radon-222 Emissions From Underground Uranium Mines," Progress Report 2, Pacific Northwest Laboratory, Richland, WA, February 1980.

Jo89 Jones, R.K., Environmental Coordinator, UMETCO Minerals Corporation, Grand Junction, CO, Comments on Proposed Radionuclide NESHAPS Standards, Docket No. A-79-11, to Central Docket Section (A-130), U.S. Environmental Protection Agency, Washington, DC, May 12, 1989.

Ko80 Kown, B.T.; Vandermast, V.C.; and Ludwig, K.L., "Technical Assessment of Radon-222 Control Technology for Underground Uranium Mines," ORP/TAD-80-7, Contract No. 68-02-2616, EPA, Office of Radiation Programs, Washington, DC, April 1980.

Mo79 Moore, R.E.; Baes, C.F. III; McDowell-Boyer, L.M.; Watson, A.P.; Hoffman, F.O.; Pleasant, J.C.; and Miller, C.W., "AIRDOS-EPA: A Computerized Methodology for Estimating Environmental Concentrations and Dose to Man From Airborne Releases of Radionuclides," EPA 520/1-79-009, Oak Ridge National Laboratory for U.S. EPA, Office of Radiation Programs, Washington, DC, December 1979.

Pi88a Pierce, P.E., Senior Mining Engineer, Grants, NM, written communication, August 1988.

Pi88b Pierce, P.E., Senior Mining Engineer, Grants, NM, written communication to R.L. Blanchard, SC&A, Inc., Montgomery, AL, November 28, 1988.

Pi88c Pierce, P.E., Senior Mining Engineer, Grants, NM, written communication to D.J. Goldin, SC&A, Inc., McLean, VA, November 1988.

Pi89 Pierce, P.E., Senior Mining Engineer, Grants, NM, written communication, May 1989.

Sa89 Sampson, G., UMETCO Minerals Corporation, Grand Junction, CO, written communication to Wayne Dolezal, Grants, NM, May 8, 1989.

Tr79 Travis, C.C.; Cotter, S.J.; Watson, A.P.; Randolph, M.L.; McDowell-Boyer, L.M.; and Fields, D.E., "A Radiological Assessment of Radon-222 Released From Uranium Mills and Other Natural and Technologically Enhanced Sources," Prepared by the Health and Safety Research Division, Oak Ridge National Laboratory for U.S. Nuclear Regulatory Commission, NUREG/CR-0573, 1979.

APPENDIX 11-A

Basis of the Cost Estimates for Exhaust Stack Modifications at Existing Underground Uranium Mines

The following explains the basis for estimating the costs to extend the mine air exhaust stacks at the 15 existing underground uranium mines presented in Section 11.4.4.

A typical mine ventilation exhaust stack will include steel plate ducting from a vertical shaft to a large, high pressure fan. Discharge from the fan will pass through a flared duct (an evasé) before release to the atmosphere. The cost estimate has been prepared for straight line ducting mounted vertically without an evasé, transition pieces, or equipment including fans and airdoors.

Actual steel members were considered as the diameter increased from 4 feet to 24 feet and the height increased from 33 feet (10 meters) to 200 feet (60 meters). Such a distinction was made so that bogus costs were not generated on structures that could not possibly be built and utilized in the mining operation. In the structural calculations, a minimum safety factor of 8.0 was used. The vertical stack is a tower structure composed of liner, posts, and cross-braces all integrated into one unit. The slenderness ratio of classic structural design is applicable where the length (height) divided by the base dimension shall not be greater than 50 and the length divided by the radius of gyration shall not exceed 120.

The first component considered was the stack lining. A single body of steel plate was considered. Material weight per vertical foot of stack lining was determined as shown in Table 11-A-1.

The liner plate weights used are given in Table 11-A-2 for heights of 30 feet (10 meters), 70 feet (20 meters), 100 feet (30 meters), and 200 feet (60 meters). Thicknesses of 1/4-inch for 4-foot diameter, 1/4-inch for 6-foot diameter, 3/8-inch for 8-foot diameter, and 1/2-inch for 24-foot diameter stacks were selected.

Only primary steel members were considered for each structure. Posts and cross-braces were commonly sized. Secondary members and connectors should be included considering the degree of conservatism used in the calculations. All steel weights are included in Table 11-A-2.

Concrete foundations were included. The quantities increased as stack liner diameters increased. Concrete, regardless of stack height, included 4 cubic yards for a 4-foot diameter stack, 5 cubic yards for a 6-foot diameter stack, 12 cubic yards for an 8-foot diameter stack, and 50 cubic yards for a 24-foot diameter stack.

Table 11-A-1. Weights of stack liner per vertical foot.

Stack Diameter	Liner Thickness 1/4-Inch	3/8-Inch	1/2-Inch	5/8-Inch
4'	128.3 lbs	192.3 lbs	256.4 lbs	320.5 lbs
6'	192.3	288.4	384.5	480.7
8'	256.3	384.5	512.7	640.8
24'	769.1	1153.6	1538.2	1922.7

Table 11-A-2. Weights of structural steel used.

Stack Height Meters	Steel Member	Support Steel Brace Spacing (Feet)	Length (Feet)	Weight (lbs)	Casing Weight (lbs)	Total Weight (lbs)
		4-foot Diameter; 1/4 Inch Thick				
10	6WF20	10	180	3,600	3,846	7,446
20	6WF20	10	420	8,400	8,974	17,374
30	8WF35	10	600	21,000	12,820	33,820
60	8WF35	5	1200	42,000	25,640	67,640
		6-foot Diameter; 1/4 Inch Thick				
10	6WF20	10	204	4,080	5,769	9,849
20	6WF20	10	476	9,520	13,461	22,981
30	8WF35	10	680	23,800	19,230	43,030
60	8WF35	5	1360	47,600	38,460	86,060
		8-foot Diameter; 3/8 Inch Thick				
10	6WF20	10	240	4,800	11,535	16,335
20	6WF20	5	840	16,800	26,915	43,715
30	8WF35	5	1200	42,000	38,450	80,450
60	8WF35	5	2400	84,000	76,900	160,900
		24-foot Diameter; 1/2 Inch Thick				
10	8WF35	10	480	16,800	46,146	62,946
20	8WF35	5	1960	68,600	107,674	176,274
30	10WF49	10	1600	78,400	153,820	232,220
60	10WF49	5	5600	274,400	307,640	582,040

Costs were based on actual past quotations and escalated to current values as per U.S. Bureau of Labor Statistics, Consumer Price Index, and other sources. A composite cost of $1.80 per pound was used for structural steel finished, fabricated, and erected. A concrete cost of $150 per cubic yard was used for delivery and placement. Total costs per individual stack are shown in Table 11-A-3.

Each underground uranium mine has a different set of operating and ventilating conditions. Thus, the exhaust ports from each mine were constructed to meet these localized conditions. The number and size of each exhaust shaft included in the cost estimate are shown in Table 11-A-4.

Table 11-A-3. Exhaust stack costs (dollars) for individual stacks.

Stack Diameter	Cost Component	Stack Height, meters 10	20	30	60
4 ft	Steel	13,400	31,300	60,900	121,800
	Concrete	600	600	600	600
	Total	14,000	31,900	61,500	122,400
6 ft	Steel	17,700	41,400	77,500	154,900
	Concrete	750	750	750	750
	Total	18,500	42,200	78,300	155,700
8 ft	Steel	29,400	78,700	144,800	289,600
	Concrete	1,800	1,800	1,800	1,800
	Total	31,200	80,500	146,600	291,400
24 ft	Steel	113,300	317,300	418,000	1,047,700
	Concrete	7,500	7,500	7,500	7,500
	Total	120,800	324,800	425,500	1,055,200

Note - Costs of the 7-foot diameter stacks were estimated by the ratio of costs for 6 and 8-foot diameter stacks.

Table 11-A-4. Number and size of exhaust shafts assumed for cost estimate.

Mine	No. of Vents	Diameter (feet)
Section 23	4 9	4 6
Schwartzwalder	3	8
Pigeon	1	8
Pinenut	1	8
Kanab North	1	8
Mt. Taylor	1	24
Sheep Mountain No. 1	5	4 (Avg)
King Solomon	13	8
Sunday	12	8
Deremo-Snyder	11	8
Wilson-Silverbell	7	8
Calliham	1	8
Nil	3	6
La Sal	5	7
Snowball-Pandora	4	7

12. SURFACE URANIUM MINES

12.1 GENERAL DESCRIPTION

Uranium is a silvery-white, radioactive metal that is used as fuel in nuclear reactors and as a constituent of nuclear weapons. The uranium is removed from the ore by milling and may be enriched in the uranium-235 isotope prior to use. The background concentration of uranium in the earth's crust is approximately 2 parts per million; it occurs in many rocks as a minor constituent. In the United States, most of the uranium resources occur in sandstone host rocks, including coarse and fine-grained clastic materials.

In surface mining, the topsoil and overburden are excavated or stripped to expose the uranium ore. Topsoil may be segregated and saved for reclamation; overburden is piled on unmineralized land beside the exavation or pit. Low-grade ore encountered in the stripping may be saved for blending with higher grade ore or for subsequent heap leaching. It may also be segregated for later burial or mixed with waste rock and serve in part as the earthen cover for reclamation. Typically, the pits and overburden or waste piles will cover over 100 acres each; the pits, waste piles, and haul roads of a major open-pit mining operation may cover over 1,000 acres.

Initial excavation may uncover most or all of an ore body, or mining may progress in phases along the ore zone; this is an economic consideration determined largely by the size, shape, depth, and characteristics of the ore zone. Where the stripping is done in phases, overburden from the subsequent cuts is backfilled into the earlier mined area, each area being reclaimed as the mining progresses along the ore zone until the final cut is completed. When mining is completed, the final cut may be backfilled, remaining highwalls reduced, waste piles sloped and graded, topsoil replaced, and the area revegetated. The extent and success of these efforts depends on applicable regulations or lease requirements.

12.1.1 Surface Mine Production

Annual uranium ore production from surface mines in the United States from 1948 through 1986 is presented in Table 12-1. The data show the cyclical nature of the industry. Production trends pointed upward during the 1950s and early 1960s, reaching a peak of about 2.5 million tons in 1961. During the remainder of the 1960s, production never exceeded the 1961 peak, averaging only about 1.7 million tons per year. In 1971, production increased sharply, starting an upward trend that would continue until the peak of 1980 when more than 10 million tons were produced. Since 1980, the trend has been sharply downward, falling to less than 2 million tons in 1984, and below a million tons by 1986. Since the peak production year of 1980, the number of active surface mines has declined from 167 to 2.

Table 12-1. Uranium ore production from surface mines, 1948-1986.

Year	Thousand Tons of Ore
1948	<1
1949	1
1950	23
1951	28
1952	65
1953	179
1954	266
1955	374
1956	1,247
1957	1,613
1958	2,358
1959	2,206
1960	2,393
1961	2,482
1962	1,782
1963	1,879
1964	1,537
1965	1,243
1966	1,333
1967	1,593
1968	2,366
1969	2,173
1970	2,801
1971	3,284
1972	3,887
1973	4,544
1974	4,216
1975	4,247
1976	4,673
1977	5,578
1978	8,237
1979	9,655
1980	10,394
1981	8,436
1982	5,504
1983	(a)
1984	1,968
1985	936
1986	(a)

(a) Data not available.

Some of the recently idled open-pit mines are being held on a standby status; the operators hoping for a recovery in the uranium market. Others, nearing the end of their economic reserves as the market slumped, have been closed permanently and either reclaimed or abandoned.

Much of today's uranium production is from underground mines and alternative sources; this trend is expected to continue for the foreseeable future. It is expected that present trends will continue at least through 1995, with uranium mining concentrated in a dozen or so medium to large underground mines and a few open-pit mines. Factors that could alter this include legislative supports favoring the domestic uranium industry or changes in international conditions, such as a repeat of the energy crisis of the mid-1970s, leading to renewed interest in nuclear power generation.

Historically, the principal states in which uranium ores have been mined are Arizona, Colorado, New Mexico, Texas, Utah, Washington, and Wyoming; lesser amounts have been produced in California, Idaho, Montana, Nebraska, Nevada, North Dakota, Oregon, and South Dakota (DOE86).

Over 1,300 surface uranium mines have been identified in the United States (EPA83). Of this total, over 1,000 have been identified as having uranium production under 1,000 tons. These small mines typically have surface areas ranging from several hundred to several thousand square feet. The remainder of the mines, categorized by 1,000 - 100,000 and > 100,000 tons uranium ore production, are summarized by location in Table 12-2.

Table 12-2. Breakdown by state of surface uranium mines with > 1,000 tons production.

State	1,000 - 100,000 Tons	Greater than 100,000 Tons
Arizona	37	1
California	1	0
Colorado	12	4
Idaho	1	0
Montana	1	0
Nevada	1	0
New Mexico	3	5
North Dakota	10	0
Oregon	1	1
South Dakota	33	2
Texas	19	25
Utah	6	0
Washington	3	2
Wyoming	66	31

The larger production mines typically have features such as overburden, topsoil, and low grade mineralization (ore) associated with the actual pit surfaces. All of these features contribute to radon and particulate emissions, with intensity determined by uranium content and size.

The 265 mines identified in Table 12-2 accounted for over 99 percent of all surface uranium ore production and, subsequently, particulate and radon emissions. Of the 265 mines listed, 2 are actively producing uranium ore; these are the Chevron Resource Company's Rhode Ranch mine, approximately 110 miles due south of San Antonio, Texas, and the Pathfinder Mine's Shirley Basin mine in Carbon County, Wyoming. The remaining 263 mines are closed and in varying states of reclamation.

12.1.2 Standards and Regulations Applicable to Surface Uranium Mining

Health, safety, and environmental hazards associated with uranium mining are regulated by a variety of Federal and state laws. Passage of the National Environmental Policy Act at the beginning of 1970 marked the onset of the public's new environmental awareness; subsequently, especially through the 1970s, there was a rapid succession of increasingly strict environmental laws affecting mining activities. These laws were passed at both the Federal and state level.

12.1.2.1 Federal Regulations

Federal laws and regulations applicable, at least in part, to uranium mining include the Clean Air Act, the Federal Water Pollution Control Act of 1948, the Safe Drinking Water Act, the Solid Waste Disposal Act, and the Resource Conservation and Recovery Act. These provide basic requirements for environmental protection and require the EPA to establish standards and guidelines under which the states may issue permits and enforce the laws. States may establish stricter or more detailed standards, but their regulations generally parallel those of the EPA.

Another law that has indirectly affected the surface uranium mining industry is the Surface Mining Control and Reclamation Act of 1977. Although this act applies only to coal mining operations, the environmental and reclamation requirements that it established have served as models for many western states in regulating non-coal surface mining operations.

Table 12-3 gives an overview of Federal laws, regulations, and guidelines applicable to surface uranium mining.

Table 12-3. Federal laws, regulations, and guidelines for uranium mining.

Department or Agency	Permits and Approvals			Environmental Standards				
	Prospecting	Mining	Reclamation	Air Quality	Surface Water	Ground Water	Solid Waste	Public Health and Safety
Department of the Interior:								
Bureau of Land Management	X	X	X					
Bureau of Indian Affairs	X	X	X					
National Park Service	X	X	X					
Fish and Wildlife Service	X	X	X					
Bureau of Reclamation	X	X	X					
Department of Agriculture:								
Forest Service	X	X	X					
Department of Energy	X	X	X					
Environmental Protection Agency				X	X	X	X	
Army Corps of Engineers					X			
Department of Labor:								
Mine Safety & Health Administration								X
Occupational Health & Safety Administration								X
Nuclear Regulatory Commission		X						X

As shown in Table 12-4, a significant percentage of uranium resources are on Federal and Indian lands, 23 percent and 7 percent respectively. Federal laws and regulations govern uranium exploration and mining on these lands. The specific laws and regulations applying to a particular operation depend on the land category, but in all cases, some degree of review and approval is required before any significant surface mining operations can be undertaken. For permitting requirements, operations on these lands fall into two broad categories: leased lands and mining claim locations. Lands subject to leasing include Indian lands (leased from the tribe with concurrence of the Secretary of the Interior), acquired lands, and withdrawn lands. The public domain lands, unless otherwise reserved, are open to mining claim locations.

Table 12-4. Estimated additional uranium resources by land status.[a]

Land Status	Million Pounds U_3O_8	Percent
Federal lands		
Public lands - BLM, FS	540	22.7
Other	120	5.2
Indian lands	170	7.1
State lands	80	3.2
Private fee lands	1,460	61.8
Totals	2,370	100.0

(a)Adapted from DOE86, based on $50/lb forward cost.

Federal regulation and supervision are particularly significant in the western uranium-producing states, several of which have large percentages of federally owned lands. These include Arizona (43 percent), California (45 percent), Colorado (36 percent), Idaho (64 percent), Montana (30 percent), Nevada (87 percent), New Mexico (34 percent), Utah (66 percent), Washington (29 percent), and Wyoming (48 percent). Most of these states also have environmental requirements for mining operations; an operator on Federal or Indian lands will normally be subject to whichever requirements are the more stringent. In addition, any Federal permits or approvals are subject to the National Environmental Policy Act, which requires an environmental review of the proposed operation prior to Federal approval.

On lands subject to leasing, environmental reviews and approvals are necessary at the prospecting, exploration, and mining stages. This leasing function is carried out on most

Federal lands by the Bureau of Land Management (BLM) in consultation with the appropriate surface management agency.

On Indian lands, the leasing function is split; the mineral lease is developed by the tribe with the Bureau of Indian Affairs carrying out the responsibilities of the Secretary of the Interior, while the BLM supervises operations under the lease.

Environmental requirements in both Federal and Indian leases range from the mere statement in older leases that the lessee shall comply with all appropriate Federal, state, and local standards, to the current practice of including additional specific standards and requiring monitoring and reporting to document compliance. Likewise, reclamation requirements have evolved from the requirement in older leases that the land be reclaimed to the satisfaction of the Secretary of the Interior to specific reclamation plans being required as part of the approval process. An outstanding example of what the Department of Interior may require in the way of reclamation of a surface uranium mine is the recently approved plan for the Jackpile-Paguate mine on the Laguna reservation in New Mexico.

On lands subject to mining claim locations, environmental review and approval of a plan of operations are required on land managed by the BLM for any operations where the annual surface disturbance will exceed 5 acres and for any surface operation in environmentally sensitive areas.

Mining operations on public domain lands in the National Forest System are managed by the Forest Service (FS), an agency of the Department of Agriculture. FS approval is required for activities that could result in significant surface disturbance.

12.1.2.2 State Regulations

Uranium mining on private and state-owned lands is subject to regulation by the particular state and, in some instances, the local governments. Most of the western states that have significant uranium mining have enacted some degree of environmental and surface protection legislation in recent years. Laws, regulations, and guidelines applicable to uranium mining in Arizona, Colorado, New Mexico, South Dakota, Texas, Utah, and Wyoming are summarized below.

12.1.2.2.1 <u>Colorado</u>

Colorado is an NRC Agreement State and has been authorized by the EPA to issue NPDES discharge permits. Both radiation and water quality regulatory activities are under the jurisdiction of the Colorado Department of Health. National ambient air quality standards and various state emission control regulations apply to uranium mining activities.

Prospecting permits and mining leases for state-owned lands are issued by the Board of Land Commissioners, affiliated with the Colorado Department of Natural Resources. The Board has policies and regulations concerning environmental impacts from mining activities on state lands.

The Colorado Mined Land Reclamation Board, created in 1976 and administered by the Department of Natural Resources, issues permits for all mining operations on all lands in the state, both Federal and non-Federal, under the Colorado Mined Land Reclamation Law.

12.1.2.2.2 New Mexico

In New Mexico, a mine plan must be filed with and approved by the State Mining Inspector. However, the emphasis of the review is on worker and mine safety rather than environmental impacts. There are, at present, no state regulations governing solid wastes and land reclamation for mining operations. The plan and bonding requirements for the mining permit determine the extent of any waste control and land reclamation.

Prospecting permits and mining leases for state-owned lands are issued by the State Land Commissioners, who have policies and regulations concerning environmental impacts from mining activities on the state lands.

12.1.2.2.3 Texas

Uranium prospecting and mining activities in Texas are regulated under the Texas Uranium Surface Mining and Reclamation Act, administered by the Texas Railroad Commission on all lands except those owned by the state. The regulations establish environmental and reclamation standards, provide for review and approval of mining plans, and require monitoring and bonding sufficient to ensure compliance.

Prospecting permits and mining leases on state-owned lands are issued by the General Land Office (GLO). Mining and reclamation requirements are similar to those for the non-state lands but are enforced by the GLO.

The Texas Guides and Regulations for Control of Radiation apply to in-situ uranium mining (under NRC Agreement State licensing) but not to surface uranium mining.

12.1.2.2.4 Utah

Uranium mining in Utah is regulated under the Utah Mined Land Reclamation Act, by the Division of Oil, Gas, and Mining of the Department of Natural Resources. A mining and reclamation plan and bonding are required. Standards are promulgated for environmental considerations as well as public health and safety concerns. Reclamation requirements include regrading of slopes,

burial of mineralized materials, and applying topsoil cover sufficient to sustain adequate revegetation. Mining activities on state-owned lands require a lease and approval of a plan of operations from the Division of State Lands and Forestry of the Department of Natural Resources.

12.1.2.2.5 Wyoming

Uranium mining in Wyoming is regulated under the Wyoming Environmental Quality Act by the Land Quality Division of the Wyoming Department of Environmental Quality. Regulations require mining and reclamation plans, establish environmental standards, and provide for monitoring and bonding to ensure compliance. Mined land must be restored to a use at least equal to its highest previous use. The state has established standards for residual radioactivity on lands mined for uranium. Procedures for proper handling of sub-ore and mineralized wastes are also specified. An Air Quality Permit is required for construction of a uranium mining and/or processing facility; compliance with applicable ambient air quality standards and prevention of significant deterioration provisions must be demonstrated.

12.1.2.2.6 Arizona

Arizona is an NRC Agreement State. There are no additional state-imposed legislative or regulatory requirements concerning exploration or prospecting permits, mining plans, or surface reclamation.

12.1.2.2.7 South Dakota

South Dakota has established a Division of Land and Water Quality within the Department of Water and Natural Resources. Within this Division, the Exploration and Mining Program Office is responsible for administering the Mined Land Reclamation Act. The Act and implementing regulations require exploration permits, prospecting permits, and mining plans. The mining plans must include appropriate measures for reclamation.

12.1.2.3 State Reclamation Status

Reclamation status of mines within various mining districts varies greatly based on the individual state permitting regulations at the time the mine was operated. In most states with stringent permitting and reclamation requirements, a significant percentage of the mines have been reclaimed or are undergoing reclamation.

Two primary reclamation techniques were noted during field studies summarized in "Inactive Surface Uranium Mine Radon and Particulate Emissions" (SCA89). The first method consists of total backfill of the excavated pit, with waste material returned in the sequence it was removed. The site is then regraded to original contours and revegetated. The second, and most

prevalent type of reclamation, consists of grading the waste piles and pit wall to a 3:1 or 4:1 slope, with subsequent topsoiling and revegetation. Table 12-5 summarizes the estimated percentage of mines in each reclamation class for larger ore-producing states (SCA89).

As shown in Table 12-5, the majority of the surface mines in most states have had no reclamation or emissions controls implemented. Leaseholders have typically left the mining areas in a condition to comply with any regulatory requirements, which in most cases, were quite limited. Therefore, many of the original landowners had property returned in totally unreclaimed condition with no financing available to repair the land. This problem is prevalent in Arizona, South Dakota, and Nevada.

No existing controls for radon or particulate emissions from inactive surface uranium mines have been specifically implemented by any mine operator or regulatory agency for the sole reason of lowering these emissions. However, reclamation of these mines for other reasons, such as legal requirements, aesthetics, or corporate policy leads to lower radiological emissions in most cases.

12.1.2.3.1 Arizona

All mines are located on Navajo Indian land and are unreclaimed and abandoned. As no reclamation requirements are or were imposed on mining companies, the status of reclamation is not expected to change.

12.1.2.3.2 Colorado

Some very minor reclamation in the form of sloping pit and waste piles has been performed at the sites. However, the reclamation did not include covering of waste piles or pit surfaces. Thus, particulate and radon emissions have not been reduced. Since no state reclamation requirements were imposed, it is anticipated that the mines will remain unreclaimed.

12.1.2.3.3 South Dakota

No state reclamation requirements were in effect during the time the mining activities were carried out. All mines are unreclaimed and abandoned.

12.1.2.3.4 Texas

Approximately two-thirds of the surface uranium mines in Texas have been or will be reclaimed by local mining companies under regulations enforced by the Texas Railroad Commission. Most of these mines required reclamation because they were permitted by the State of Texas after the Surface Mining Act of 1975.

Table 12-5. Estimated status[a] of surface uranium mine reclamation.

State	Total Ore Production 1,000 - 100,000 tons			Total Ore Production > 100,000 tons		
	Class I (%)	Class II (%)	Unreclaimed (%)	Class I (%)	Class II (%)	Unreclaimed (%)
Arizona	0	5	95	0	0	100
Colorado	5	20	75	5	20	75
New Mexico	0	15	85	0	15	85
North Dakota	0	5	95	-	-	-
South Dakota	0	5	95	0	5	95
Texas	10	45	45	10	45	45
Utah	0	0	100	-	-	-
Washington	0	50	50	0	50	50
Wyoming	5	40	55	5	40	55

(a)Status defined as:
Class I - total backfill, recontouring, and revegetation;
Class II - resloping of waste piles and pits, topsoiling, and revegetation;
Unreclaimed - property abandoned without restoration.

Mining companies in the region use two primary forms of reclamation. One method entails a total backfill in which material is returned to the pit in the sequence it was removed, and land surfaces are brought back to as near original contours as possible. The other method consists of sloping, topsoiling, and revegetation of waste piles and pit walls, with subsequent formation of a holding pond of acceptable water quality.

12.1.2.3.5 Utah

Surface mines in Utah are abandoned and unreclaimed. This status is not expected to change.

12.1.2.3.6 Wyoming

Mining areas in Wyoming include the Powder River Basin, the Gas Hills, and the Shirley Basin. There are no active mines in the Powder River Basin. Most mines in this area have been reclaimed by sloping, topsoiling, and revegetation. In the Gas Hills and Shirley Basin regions, the general mining practice was

to place the wastes from active pits into inactive pits. Reclamation in these areas is ongoing, with many mines reclaimed, and others being reclaimed. The state is currently sponsoring reclamation of some of the older Shirley Basin mines.

12.2 BASIS OF THE DOSE AND RISK ASSESSMENT

The assessment of the doses and risks posed by emissions of radon-222 and radionuclides released in particulate form from surface uranium mines is based upon site-specific evaluations of the 2 active mines and 25 large inactive mines. The characteristics of these mines are given in Table 12-6. Large mines (total ore production > 1,000 tons) were selected for evaluation since they account for more than 99 percent of the total ore produced, and hence radionuclide emissions. The mines selected are located in six different states: Arizona, New Mexico, Colorado, South Dakota, Texas, and Wyoming. The results obtained from this representative group of mines are extrapolated to obtain an estimate of the doses and risks posed by all surface uranium mines.

12.2.1 Radionuclide Source Terms

The source terms for surface uranium mines were developed from site characterizations and radiological data collected during site visits and field studies (Pi88, PNL82, SCA89). Measured radon flux rates were developed for one mine within each state (SCA89). For the other mines, the radon source terms are estimated by correlating the appropriate flux data with measured gamma exposure rates obtained by site surveys. The radon-222 emissions are given in Table 12-7. Particulate source terms are estimated on the basis of measured radium-226 concentrations, site-specific dusting factors, and the assumption that all members of the uranium-238 decay series are in secular equilibrium. The uranium source terms are shown in Table 12-8.

12.2.2 Other Parameters Used in the Assessment

Site-specific demographic data were developed for the 0-5 km areas around each of the mines during site visits (SCA89). These were used in conjunction with meteorological data obtained from the nearest weather station. Details of the parameters supplied as input to the assessment codes are presented in Appendix A.

12.3 RESULTS OF THE DOSE AND RISK ASSESSMENT

The outputs of the assessment codes used to evaluate the doses and risks of fatal cancers caused by radon-222 and radioactive particulate emissions from surface uranium mines include the following:

1. working level exposure and the lifetime fatal cancer risk to the most exposed individuals from radon-222 at each surface mine;

Table 12-6. Mines characterized in the field studies.

Geologic Region	Mine	Size (tons ore)	Reclamation Status
		Inactive Mines	
Texas	Kopplin	>100,000	unreclaimed
	Manka	1,000 - 100,000	unreclaimed
	Stoeltje	>100,000	minor reclamation
	Wright-McCrady	>100,000	unreclaimed
	Swientek	>100,000	fully reclaimed
Arizona-New Mexico	Ramco 20, 22	>100,000	unreclaimed
	Jack Daniels #1	1,000 - 100,000	unreclaimed
	Jack Huskon #3	1,000 - 100,000	unreclaimed
	Evans Huskon #35	1,000 - 100,000	unreclaimed
	Ramco #21 East	1,000 - 100,000	unreclaimed
	Yazzie #2	1,000 - 100,000	unreclaimed
Wyoming	Morton Ranch #1704	>100,000	fully reclaimed
	Lucky Mc 70-1, 7E	>100,000	unreclaimed
	Lucky Mc 4X, 4P	>100,000	unreclaimed
	Lucky Mc W. Gas Hills	>100,000	unreclaimed
South Dakota	Darrow #1	1,000 - 100,000	unreclaimed
	Darrow #2, 3	>100,000	unreclaimed
	Darrow #4	1,000 - 100,000	unreclaimed
	Darrow #5	>100,000	unreclaimed
	Freezout	1,000 - 100,000	unreclaimed
Colorado	Gert #4-7	>100,000	unreclaimed
	Johnson	1,000 - 100,000	unreclaimed
	Sage	1,000 - 100,000	unreclaimed
	Marge #1-3	1,000 - 100,000	unreclaimed
	Rob	>100,000	unreclaimed
		Active Mines	
Texas	Rhode Ranch	>100,000	continuous backfill
Wyoming	Shirley Basin	>100,000	operating

Table 12-7. Estimated radon-222 emissions from surface uranium mines.

Geologic Region	Mine	Radon-222 Gross (Ci/y)	Radon-222 Net* (Ci/y)
Texas	Kopplin	12	12
	Manka	19	15
	Stoeltje	10	7.2
	Wright-McCrady	80	68
	Swientek	11	2.0
	Rhode Ranch	-	40
Arizona-New Mexico	Ramco 20, 22	47	44
	Jack Daniels #1	16	14
	Jack Huskon #3	17	18
	Evans Huskon #35	<1	<1
	Ramco #21 East	7.0	5.7
	Yazzie #2	7.0	6.5
Wyoming	Morton Ranch #1704	120	110
	Lucky Mc 70-1, 7E	420	370
	Lucky Mc 4X, 4P	300	270
	Lucky Mc W. Gas Hills	190	150
	Shirley Basin	-	920
South Dakota	Darrow #1	8.0	5.4
	Darrow #2, 3	18	12
	Darrow #4	9.0	5.9
	Darrow #5	43	32
	Freezout	19	17
Colorado	Gert #4-7	530	480
	Johnson	81	52
	Sage	270	240
	Marge #1-3	190	170
	Rob	630	600

* Background radon considered as appropriate.

Table 12-8. Estimated particulate emissions from surface uranium mines.

Geologic Region	Mine	Uranium-238[a] (Ci/y)
Texas	Kopplin	6.7E-4
	Manka	6.6E-4
	Stoeltje	3.2E-4
	Wright-McCrady	4.0E-3
	Swientek	-
	Rhode Ranch	-
Arizona-New Mexico	Ramco 20, 22	6.5E-4
	Jack Daniels #1	7.4E-4
	Jack Huskon #3	7.8E-4
	Evans Huskon #35	3.5E-6
	Ramco #21 East	1.4E-4
	Yazzie #2	2.1E-4
Wyoming	Morton Ranch #1704	2.8E-2
	Lucky Mc 70-1, 7E	1.6E-1
	Lucky Mc 4X, 4P	1.2E-1
	Lucky Mc W. Gas Hills	6.4E-2
	Shirley Basin	-
South Dakota	Darrow #1	1.9E-3
	Darrow #2, 3	4.8E-3
	Darrow #4	2.5E-3
	Darrow #5	1.1E-2
	Freezout	5.6E-3
Colorado	Gert #4-7	4.7E-3
	Johnson	6.7E-4
	Sage	2.9E-3
	Marge #1-3	1.7E-3
	Rob	7.3E-3

(a) Uranium-238 assumed to be in secular equilibrium with its decay products.

2. the number of fatal cancers committed per year in the regional (0-80 km) populations around each surface mine from radon-222 emissions;

3. dose equivalent rates and the lifetime fatal cancer risk to the most exposed individuals from radioactive particulate emissions;

4. the collective dose equivalent rates and fatal cancers committed per year in the regional populations from radioactive particulates; and

5. the estimated collective risk (deaths/year) and the distribution of the fatal cancer risk among all persons living within 80 km of surface uranium mines.

12.3.1 Radon Releases

The estimated radon exposures and the lifetime fatal cancer risks to nearby individuals from radon-222 releases from the study mines are summarized in Table 12-9. The estimated risks (deaths/year) to the regional populations around these mines are shown in Table 12-10. Estimated exposures range from 2E-7 to 4E-5 working levels for nearby individuals. The highest individual lifetime fatal cancer risk is estimated to be 5E-5, while the highest population risk is 1E-3 deaths/year.

Table 12-11 presents the frequency distribution of the fatal cancer risk estimated for all surface uranium mines. This distribution is developed by summing the individual distributions obtained for each mine within a given region and adjusting each regional distribution by the estimated percentage of the total mines within the region represented by the study mines. The regional distributions are then summed to obtain the overall distribution presented in Table 12-11. The total number of fatal cancers per year due to radon releases from surface uranium mines in the regions studied is estimated to be 3E-2.

12.3.2 Particulate Emissions

The uranium-238 source terms presented in Table 12-8 were used to evaluate the impacts of particulate releases from inactive surface uranium mines. For each region, only the mine sites with the largest estimated particulate releases were evaluated.

The results of the analysis show that: organ dose rate equivalents are below 15 mrem/y for the nearby individuals at all sites; for the collective populations, organ dose equivalents are below 50 person-rem/y for all sites; inhalation is the dominant exposure pathway in all cases; thorium-230, uranium-238, and uranium-234 are the predominant radionuclides contributing to the doses and risks; and the organs receiving the highest dose equivalents are the lungs, endosteum, and the red marrow (SCA89).

Table 12-9. Estimated exposures and risks to individuals living near surface uranium mines.

Region/Mine	Maximum Radon Concentration (pCi/l)	Maximum Exposure (WL)	Maximum Lifetime Fatal Cancer Risk to Individual	Distance[a] (meters)
Texas				
Kopplin	1.2E-2	3.4E-5	5E-5	250
Manka	2.1E-3	6.3E-6	9E-6	750
Stoeltje	1.3E-3	4.0E-6	6E-6	750
Wright-McCrady	3.8E-3	1.3E-5	2E-5	1,500
Swientek	1.7E-3	4.7E-6	7E-6	250
Rhode Ranch	8.7E-4	2.9E-6	4E-6	1,500
Arizona-NM				
Ramco 20, 22	2.6E-4	1.7E-6	2E-6	15,000
Jack Daniels #1	1.1E-3	3.2E-6	4E-6	750
Jack Huskon #3	4.1E-3	1.2E-5	2E-5	750
Evans Huskon #35	1.2E-6	7.7E-9	1E-8	15,000
Ramco #21 East	3.4E-5	2.2E-7	3E-7	15,000
Yazzie #2	3.8E-5	2.5E-7	3E-7	15,000
Wyoming				
Morton Ranch #1704	1.2E-4	7.8E-7	1E-6	15,000
Lucky Mc 70-1, 7E	3.9E-4	2.5E-6	3E-6	15,000
Lucky Mc 4X, 4P	2.9E-4	1.9E-6	3E-6	15,000
Lucky Mc W. Gas Hills	2.0E-4	1.3E-6	2E-6	15,000
Shirley Basin	6.9E-3	3.5E-5	5E-5	7,500
South Dakota				
Darrow #1	4.0E-5	1.7E-7	2E-7	4,000
Darrow #2, 3	8.5E-5	3.5E-7	5E-7	4,000
Darrow #4	4.1E-5	1.7E-7	2E-7	4,000
Darrow #5	4.4E-4	1.6E-6	2E-6	2,500
Freezout	1.2E-4	4.8E-7	7E-7	4,000
Colorado				
Gert #4-7	3.2E-3	2.2E-5	3E-5	25,000
Johnson	6.4E-4	4.1E-6	6E-6	15,000
Sage	2.9E-3	1.9E-5	3E-5	15,000
Marge #1-3	2.0E-3	1.3E-5	2E-5	15,000
Rob	1.7E-3	1.1E-5	2E-5	15,000

(a) Distance to the maximum exposed individual.

Table 12-10. Estimated fatal cancers per year in the regional (0-80 km) populations due to radon-222 emissions from surface uranium mines.

Geologic Region	Mine	Fatal Cancers per Year
Texas	Kopplin	5E-4
	Manka	4E-4
	Stoeltje	2E-4
	Wright-McCrady	1E-3
	Swientek	3E-5
	Rhode Ranch	1E-4
Arizona-New Mexico	Ramco 20, 22	9E-5
	Jack Daniels #1	3E-5
	Jack Huskon #3	4E-5
	Evans Huskon #35	4E-7
	Ramco #21 East	1E-5
	Yazzie #2	1E-5
Wyoming	Morton Ranch #1704	5E-5
	Lucky Mc 70-1, 7E	2E-4
	Lucky Mc 4X, 4P	1E-4
	Lucky Mc W. Gas Hills	7E-5
	Shirley Basin	8E-5
South Dakota	Darrow #1	4E-6
	Darrow #2, 3	9E-6
	Darrow #4	4E-6
	Darrow #5	2E-5
	Freezout	1E-5
Colorado	Gert #4-7	5E-4
	Johnson	6E-5
	Sage	3E-4
	Marge #1-3	2E-4
	Rob	5E-4

Table 12-11. Estimated distribution of the fatal cancer risk caused by radon-222 emissions from all surface uranium mines.

Risk Interval	Number of Persons	Deaths/y
1E-1 to 1E+0	0	0
1E-2 to 1E-1	0	0
1E-3 to 1E-2	0	0
1E-4 to 1E-3	0	0
1E-5 to 1E-4	4,000	1E-3
1E-6 to 1E-5	200,000	5E-3
< 1E-6	30,000,000	2E-2
Totals	30,000,000	3E-2

Table 12-12 summarizes the lifetime fatal cancer risks to nearby individuals and the committed fatal cancers (deaths/year) in the regional populations from radioactive particulate emissions for each site. No individual is estimated to have a lifetime fatal cancer risk greater than 2E-5. The total fatal cancers per year for all regions due to particulate emissions are estimated to be 9E-3.

Table 12-12. Estimated lifetime fatal cancer risks from particulate emissions.

Region	Nearby Individuals Lifetime Fatal Cancer Risk	Regional (0-80 km) Population Deaths/y
Texas	9E-8	2E-3
Arizona-New Mexico	1E-7	9E-4
Wyoming	2E-5	5E-3
South Dakota	2E-6	4E-4
Colorado	6E-6	9E-4

12.4 SUPPLEMENTARY CONTROL OPTIONS AND COSTS

Radon and particulate emissions can be controlled by covering various areas in and around the mines with an earthen cover. Table 12-13 shows the estimated depths of cover needed to reduce radon emissions to 20, 6, and 2 pCi/m^2/sec for various initial flux values. The initial flux values in Table 12-12 are based on flux levels measured over low-grade mineralized material, overburden, and or pit surfaces of selected mines

(SCA89). The estimated cover thicknesses are based on earthen cover designs developed for uranium mill tailings piles (see SCA89).

The cost to place an earthen cover over a mine to reduce radon emissions to 20, 6, and 2 pCi/m^2/sec for various initial flux values is shown in Table 12-14. The information is based on estimated costs to cover low grade material, overburden, and/or pit surfaces at selected mines (SCA89).

Table 12-13. Estimated depths of cover to reduce radon-222 emissions at surface uranium mines.

Initial Flux (pCi/m^2/sec)	Depth of Cover (meters) Needed for 20 pCi/m^2/sec	6 pCi/m^2/sec	2 pCi/m^2/sec
40	0.50	1.30	2.70
60	0.75	2.00	4.10
80	1.00	2.70	5.50

Table 12-14. Estimated costs to reduce radon emissions at surface uranium mines.

Initial Flux (pCi/m^2/sec)	Cost of Cover ($ X millions) Needed for 20 pCi/m^2/sec	6 pCi/m^2/sec	2 pCi/m^2/sec
40	0.40	1.95	5.75
60	0.60	2.92	8.63
80	0.80	3.90	11.50

12.5 REFERENCES

DOE86 U.S. Department of Energy, Energy Information Administration, "Statistical Data of the Uranium Industry," DOE/EIA-0478, 1986.

EPA83 U.S. Environmental Protection Agency, "Potential Health and Environmental Hazards of Uranium Mine Wastes," EPA 520/1-83-007, Office of Radiation Programs, Washington, DC, June 1983.

Pi88 Pierce, P.E., "Report of Site Visits to Operating Surface Uranium Mines," prepared by SC&A, Inc., for the U.S. Environmental Protection Agency, Office of Radiation Programs, Washington, DC, August 1988.

PNL82 Pacific Northwest Laboratory, "Radon and Aerosol Release from Open Pit Uranium Mining," PNL-4071, prepared for the U.S. Nuclear Regulatory Commission, Office of Nuclear Regulatory Research, NUREG/CR-2407, Washington, DC, August 1982.

SCA89 SC&A, Inc., "Radiological Monitoring at Inactive Surface Uranium Mines," prepared for the U.S. Environmental Protection Agency, Office of Radiation Programs, Washington, DC, February 1989.

13. PHOSPHOGYPSUM STACKS

13.1 SOURCE CATEGORY DESCRIPTION

13.1.1 General Description

Phosphogypsum is the principal byproduct generated from the wet process of producing phosphoric acid (H_3PO_4) from phosphate rock. This process, conducted at about 23 facilities in the United States, utilizes about 80 percent of the phosphate rock produced. The states most involved in phosphate rock production and the percentage produced in each are Florida (80 percent), Idaho (7 percent), North Carolina (6 percent), Tennessee (3 percent), Utah (2 percent), and Alabama and Wyoming (minor amounts). Most of the phosphoric acid resulting from this process is used in the production of agricultural fertilizers.

In 1985, 51 million metric tons (MT) of marketable phosphate rock were produced, of which about 41 million MT (80 percent) were used to produce phosphoric acid by the wet process (BOM85). Since about 3.6 MT of marketable rock are required to produce one MT of P_2O_5 (Gu75), approximately 12 million MT of P_2O_5 (16 million MT of H_3PO_4) were produced from this rock in 1985. This generated an estimated 52 million MT of phosphogypsum based on 4.5 MT of phosphogypsum per MT P_2O_5 (Gu75).[a]

The wet process for manufacturing phosphoric acid involves four primary operations: raw material feed preparation, phosphate rock digestion, filtration, and concentration. The phosphate rock is generally dried in direct-fired rotary kilns, ground to a fineness of less than 150 um for improved reactivity, and digested in a reaction vessel with sulfuric acid to produce the product, phosphoric acid, and the byproduct, phosphogypsum.

The phosphogypsum (gypsum) is transferred as a slurry to onsite disposal areas referred to as phosphogypsum stacks. These stacks are generally constructed directly on virgin or mined-out land with little or no prior preparation of the land surface. The gypsum slurry is pumped to the top of the stack where it forms a small impoundment, commonly referred to as a gypsum pond. Gypsum is dredged from the pond on top of the stack and used to increase the height of the dike surrounding the pond. The phosphogypsum stacks become an integral part of the overall wet process. Because the process requires large quantities of water, the water impounded on the stack is used as a reservoir that supplies and balances the water needs of the process. Thus, the stack is not only important as a byproduct storage site, but also contributes to the production process.

Although 75 phosphogypsum stacks were reported to exist in the United States during 1985 (PEI85), only 66 can be identified today. The three inactive phosphogypsum stacks reported earlier

(a) Estimated values rounded to two significant figures.

to be located in Nacogdoches County, Texas, were later identified as scrubber water ponds at a superphosphate plant and not phosphogypsum stacks (Si85). Likewise, a large (203 hectare[a]) stack in Donaldsonville, Louisiana, was incorrectly reported in 1985 as seven small stacks (Wa88a). Texasgulf Company's stacks in Aurora, North Carolina, reported earlier as three operating stacks, were recently identified as four idle stacks and one operating stack (Wi88). Phosphogypsum from three stacks in California and one stack in Oklahoma is either being sold or has been sold for agricultural purposes, leaving little or no phosphogypsum at the stack sites. No stack ever existed at Long Beach, California, although it was reported earlier as an unknown (PEI85). A stack did exist near Southgate, California, but it has been completely removed and utilized (St88a), most likely for agricultural purposes.

Of the 66 identifiable phosphogypsum stacks, 63 are addressed in this assessment. One stack in Alabama has an area of only about 15 m^2; thus it was not considered. The three stacks in Idaho, identified in 1985 only as inactive and abandoned, are actually five inactive stacks located between the towns of Kellogg and Smelterville in northern Idaho (Ap88). Only three of the five stacks are of sufficient size to be considered and included in the total of 63. Omission of the three stacks, one in Alabama and two in Idaho, does not significantly influence the results of the assessment.

The 63 stacks considered in this assessment are identified in Table 13-1. The location, size, and status are given for each stack. Phosphogypsum stacks are present in 12 different states, with two-thirds located in just four states, Florida, Texas, Illinios and Louisiana. Of the stacks studied, 27 are operating, 22 are inactive, and 14 are considered idle. An operating or active stack is one that is currently receiving gypsum, and an inactive stack is one that is permanently closed. A stack is classified as idle if there are definite plans to reactivate it and it has the characteristics of an active stack, e.g., water may be maintained on the stack top surface and utilized in the water balance for the facility. The phosphogypsum stacks range in area from 2 to almost 300 hectares (ha), and heights of the stacks range from 3 to about 60 meters.

A summary of phosphogypsum stacks in each state is given in Table 13-2. The information in this table relates the phosphogypsum stacks to individual states and gives the distribution of stack and stack areas within each category (operating, idle, and inactive). The phosphate industry predominates in Florida. Over half of the operating stacks exist in Florida, which accounts for 56 percent of the total base area of all operating stacks. The total base area of all phosphogypsum stacks in the United States

(a) 1 hectare (ha) = 10,000 m^2.

Table 13-1. The location and characteristics of phosphogypsum stacks in the United States.

Facility Name		Location	Stack Status	Height of Stack (m)	Base Area (ha)
Districhem Inc.[a]		Helena, AR	Inactive	23[a]	9
Agrico Chemical Co.		Bartow, FL	Operating	21	140[a]
Royster Phosphate, Inc.[a]		Palmetto, FL	Operating	21	121
Brewster Phosphates		Bradley, FL	Inactive	9	50
CF Industries, Inc.		Plant City, FL	Operating	28	162
CF Industries, Inc.		Bartow, FL	Idle[a]	40	146
Conserv, Inc.	1[b]	Nichols, FL	Operating	10	32
	2		Operating	27	31
Estech, Inc.		Bartow, FL	Inactive	9	11[a]
Farmland Industries, Inc.		Bartow, FL	Operating	20	92
Gardinier, Inc.		Tampa, FL	Operating	54	138
Seminole Fertilizer	1	Bartow, FL	Operating	6	64
Corp.	2		Operating	27	227
IMC Corp.		Mulberry, FL	Operating	24[c]	157[c]
Occidental Chemical Co.	1	White Springs,FL	Operating	22	40
(Suwannee River)	2		Operating	20	40
Occidental Chemical Co. (Swift Creek)		White Springs,FL	Operating	18	53
Royster Co.	1	Mulberry, FL	Operating	18	30
	2		Operating	24	18
USS Agri-Chemicals, Inc.		Bartow, FL	Inactive	18	20
USS Agri-Chemicals, Inc.		Ft. Meade, FL	Operating	23	61
Nu-West Industries, Inc.[a]		Conda, ID	Operating	24	36
J.R. Simplot Co.	1	Pocatello, ID	Idle	12[d]	17[d]
	2		Operating	20[d]	81
Bunker Hill Co.	1	Kellogg, ID	Inactive	8[e]	2[e]
	2		Inactive	8[e]	5[e]
	3		Inactive	8[e]	20[e]
Allied Chemical Co.		E. St. Louis,IL	Inactive	9	7
Beker Industries Corp.		Marseilles, IL	Inactive	9	18
Mobil Chemical Co.		Depue, IL	Operating	13	40
Northern Petrochemical Co.		Morris, IL	Inactive	4	28
Olin Corp.	1	Joliet, IL	Idle[a]	27	85[a]
	2		Inactive	5	8[a]
SECO, Inc.		Streator, IL	Inactive	18	10
U.S. Industrial Chemicals Co.		Tuscola, IL	Idle	16	32
Agrico Chemical Co.	1	Ft. Madison, IA	Inactive	30	20
	2		Inactive	9	20
	3		Inactive	5	24
Agrico Chemical Co.		Donaldsonville, LA	Operating	12	203[f]
Arcadian Corp.	1	Geismar, LA	Idle	20[a]	38[a]
	2		Idle	12[a]	14[a]
	3		Idle	12[a]	11[a]
	4		Operating	6[a]	9[a]
Agrico Chemical Co.[a]		Hahnville, LA	Operating	4	9
Agrico Chemical Co.[a]		Uncle Sam, LA	Operating	20	284[g]
Nu-South Industries, Inc.[a]		Pascagoula, MS	Operating	20	101

Table 13-1. The location and characteristics of phosphogypsum stacks in the United States (continued).

Facility Name		Location	Stack Status	Height of Stack (m)	Base Area (ha)
Farmers Chemical Co.		Joplin, MO	Inactive	15	28
W.R. Grace and Co.	1	Joplin, MO	Inactive	10[a]	10
	2		Inactive	10[a]	10
Texasgulf Chemicals Co.	1	Aurora, NC	Idle[a]	26[a]	16[a]
	2		Idle[a]	18[a]	30[a]
	3		Idle[a]	38[a]	51[a]
	4		Idle[a]	19[a]	51[a]
	5		Operating[a]	20[a]	51[a]
Amoco Oil Co.	1	Texas City, TX	Idle	11	14
	2		Idle	3	2
Kerley Agricultural Chemicals of Texas Inc.		Pasadena, TX	Inactive	11	11
Mobil Mining and Minerals Div.	1	Pasadena, TX	Inactive	27	24
	2		Inactive[a]	27	36
	3		Operating	30	61
Phillips Chemical Co.		Pasadena, TX	Idle	27	14
Chevron Chemical Co.		Magna, UT	Inactive[h]	5	121
Chevron Chemical Co.		Rock Springs, WY	Operating	10[i]	182

(a) Jo88c.
(b) Numbers 1,2,3, etc. refer to different stacks at a facility.
(c) Ba88; (d)Si88; (e)Ap88; (f)Wa88b; (g)Wa88a; (h)Co88; (i)Default value.
Note: Information in this table is from PEI85, except for that identified by footnotes (a), and (c) to (i).

Table 13-2. Summary of the phosphogypsum stacks in each state.

State	Number of Stacks	Total Base Areas, hectares(a) Operating	Idle	Inactive
Arkansas	1	0	0	9 (1)
Florida	20	1343 (16)	146 (1)	81 (3)
Idaho	6	117 (2)	17 (1)	27 (3)
Illinois	8	40 (1)	117 (2)	71 (5)
Iowa	3	0	0	64 (3)
Louisiana	7	505 (4)	63 (3)	0
Mississippi	1	101 (1)	0	0
Missouri	3	0	0	48 (3)
North Carolina	5	51 (1)	148 (4)	0
Texas	7	61 (1)	30 (3)	71 (3)
Utah	1	0	0	121 (1)
Wyoming	1	182 (1)	0	0
Total	63	2400 (27)	521 (14)	492 (22)

(a) Number of stacks is shown in parentheses.

is 3,413 ha, of which 71 percent is associated with operating stacks, 15 percent with idle stacks, and 14 percent with inactive stacks.

13.1.2 Composition of Phosphogypsum

Phosphogypsum is primarily calcium sulfate, $CaSO_4 \cdot 2H_2O$, which is only slightly soluble in water, about 2 g/l. The phosphogypsum contains appreciable quantities of uranium and its decay products. This is due to the high uranium concentration in phosphate rock which ranges from 20 to 200 ppm uranium-238 (6.7 to 67 pCi/g)(a). This is 10 to 100 times higher than the uranium concentration in typical rocks (1 to 2 ppm). The radionuclides of significance are: uranium-238, uranium-234, thorium-230, radium-226, radon-222, lead-210, and polonium-210. When the phosphate rock is processed through the wet process, there is a selective separation and concentration of radionuclides. Most of the radium-226, about 80 percent, follows the phosphogypsum, while about 86 percent of the uranium and 70 percent of the thorium are found in the phosphoric acid (Gu75).

Table 13-3 shows the average radionuclide concentrations measured in 50 phosphogypsum samples collected in 1985 by EPA from five stacks in central Florida (Ho88a). For comparison, the radionuclide concentrations normally observed in uncontaminated rock and soil are also presented. The concentrations measured in the phosphogypsum samples are similar to those previously reported (Gu75) and exceed those in background soil by 10 (uranium) to 60 (radium-226) times. These radionuclides and radon-222 are possible sources of airborne radioactivity. Radon-222, the decay product of radium-226, is a gaseous element which may diffuse into the air. Also, these radionuclides in particulate form may be resuspended into the air by wind and vehicular traffic. These are the two principal mechanisms for airborne releases of radioactivity from phosphogypsum stacks that will be addressed in this assessment.

Table 13-3. Average radionuclide concentrations in phosphogypsum, pCi/g dry weight.

Material	Ra-226	U-234	U-238	Th-230	Po-210	Pb-210
Gypsum	31	3.3	3.2	5.1	27	36
Background Soil	0.5	0.3	0.3	0.3	0.5	0.7

(a) 1 ppm U-238 = 0.333 pCi/g or 0.67 pCi/g total uranium, U-238 + U-234.

13.1.3 Existing Control Technology

The phosphate industry does not actively pursue the control of radon emissions from phosphogypsum stacks (Jo88a, Be88a). However, the crust that forms naturally on inactive stacks or over inactive areas of operating stacks significantly reduces the radon emissions. Water maintained on active portions of operating stacks also deters radon emissions.

There is no uniform or widespread effort or policy within the phosphate industry to control particulate emissions. Dust control measures, consisting of either spraying dusty areas with water or establishing vegetation on areas subject to wind or water erosion, have been applied at some stacks.[a] Both Conserv, Inc. (Nichols, Florida) and Mobil Chemical Company (Depue, Illinois) have used water at times to control dusty areas. The following companies have either planted vegetation or allowed the natural development of indigenous vegetation in areas subject to wind or water erosion: Northern Petrochemical Company (Morris, Illinois), Agrico Chemical Company (Ft. Madison, Iowa, and Donaldsonville, Louisiana), and Mobil Mining and Minerals Division (Pasadena, Texas).

Apparently, special effort has been made at the Gardinier stack to stabilize the sloping sides. The sides of the stack were covered with 8 to 15 cm of topsoil and then seeded into a hardy grass. This control measure not only eliminated erosion in the area seeded, but the added top soil attenuated the radon-222 flux by an average of about 23 percent (Ha85).

Thus, some effort has been made at phosphogypsum stacks to control erosion, which has often led to a reduction in airborne emissions. However, in general, particulate emissions have not been considered sufficient to warrant controls, primarily because these emissions are naturally deterred as a result of the crust that exists on inactive surfaces of a stack and the water cover or high moisture content of gypsum on active portions of operating stacks.

Exclusion fences and/or company patrols prevent access by the public to most stacks, which averts unauthorized entry onto the stacks as well as the removal of any phosphogypsum.

13.1.4 Byproduct Uses of Phosphogypsum

Byproduct uses of phosphogypsum fall into three categories: (1) chemical raw material, (2) agricultural applications, and (3) construction material (Ll85).

The first category involves the recovery of sulfur from the phosphogypsum, which is only at the experimental stage in the United States. A pilot plant was scheduled to begin operation in

(a) Information obtained in a 1985 survey of individual companies (PEI85).

the fall of 1988 at the Agrico Chemical plant at Uncle Sam, Louisiana (Kr88). The sulfur recovered from the phosphogypsum is used in the manufacture of sulfuric acid, which is necessary to produce phosphoric acid by the wet process. An aggregate or lime may be a byproduct of the sulfur recovery process which could improve the economic feasibility of the process (Ni88).

Phosphogypsum has many agricultural applications. As phosphogypsum hastens the leaching of salts from soil, it is especially useful as an amendment to salty soils (Ll85). About 180,000 MT/y are shipped from the Chevron plant in Utah to California for use as a soil conditioner for sodic soils (Kr88). Phosphogypsum from California stacks was sold for the same purpose at a rate of 270,000 MT/y until all stacks were exhausted. As a fertilizer, it is an excellent source of sulfur and calcium. For example, phosphogypsum has been used on peanut crops in North Carolina and Georgia for many years (Ll85). Other peanut producing states, e.g., Alabama, South Carolina, Texas, and Virginia, also use phosphogypsum on their crops (Kr88).

Typical agricultural application rates are 2 MT per hectare when used as a fertilizer; as a soil amendment, an initial application of 20 MT per hectare is followed by biannual applications of 10 MT per hectare (Li80). According to calculations by Roessler (Ro86), the application every four years of 2 MT per hectare over a 50-year period with no radium removal would add 0.38 pCi/g radium-226 to the soil, assuming a phosphogypsum specific activity of 30 pCi/g, a soil till depth of 15 cm, and a soil density of 1.5 g/cc. As a soil amendment, an additional 4.1 pCi/g radium-226 is incorporated into the soil based on the assumptions outlined above. Background soil in central Florida contains about 0.5 pCi/g radium-226 (Table 13-3).

As a construction material, phosphogypsum has a variety of applications, especially in other countries. No phosphogypsum is currently used in the United States for the manufacture of gypsum wallboard. However, radon measurements conducted in a room constructed of Japanese phosphogypsum wallboard at EPA's Eastern Environmental Radiation Facility could not detect any increase in the indoor radon concentration (Se88). The emanation fraction was believed to be less than 2 percent. In this country, phosphogypsum's primary use is in road construction. Combining fly ash or cement with phosphogypsum produces a mixture suitable for road bases. This has been demonstrated in the Houston, Texas, area (Ll85, Kr88). A demonstration road and parking area is planned in Bartow, Florida, that will use phosphogypsum in both the road bed and surface materials (Fl88). All previous uses of phosphogypsum for road construction in Florida have been limited to use as a road base.

Less than one million MT/y of phosphogypsum are being used in the United States at present. This represents about 1 or 2 percent of the U.S. annual production. The bulk of the usage is for agricultural applications in California and the peanut producing states in the southeast (about 450,000 MT/y). The

remaining quantities are sold for road bed construction in Texas and Florida (about 140,000 MT/y) (Kr88).

Historic usage since 1984 shows a general decline, primarily due to the closing of the California facilities, as seen in the following data (Jo88b):

1984	660,000 MT
1985	460,000 MT
1986	540,000 MT
1987	360,000 MT

These totals are based on the results of a survey of 22 of the 42 facilities listed in Table 13-1. Since some companies representing one or more facilities did not respond to the survey (Jo88b), some disagreement between the mail survey (Jo88b) and the telephone survey by Kramer (Kr88) mentioned previously is expected in the totals. While neither survey represents a total response for the industry, each survey gives an approximate total usage rate.

13.2 RADIONUCLIDE EMISSIONS

This section presents estimates of the quantity of radon-222 and radioactive particulates emitted to the air from phosphogypsum stacks. The quantity of radon-222 emitted annually from each stack is estimated for realistic conditions regarding the radon fluxes, stack areas, and particularly the hydrology of the stack surface.

Only the radioactive particulate emissions associated with vehicular traffic on or near a model stack are considered. Wind suspended particulate emissions are not a significant source of radioactivity because of the moisture content of the gypsum in operating stacks and the crust that forms on inactive stacks.

13.2.1 Radon-222 Emissions

The amount of radon-222 emitted from phosphogypsum stacks depends on highly variable factors, such as the uranium (and radium-226) concentration in phosphate rock, emanation fraction, vegetation cover, porosity, moisture, temperature, and barometric pressure. These factors, in turn, vary between sites, between locations on the same site, and with time (Ha85). These variations make it difficult to assess the radon-222 emission rate unless many flux measurements are made (Ho88a).

The amount of radon-222 released annually from phosphogypsum stacks was estimated by dividing the stack into separate regions with significantly different radon fluxes and measuring the flux from the surface area of each region. The radon-222 flux is the amount of radon-222 (picocuries) that escapes from a given area of stack surface (square meters) during a given time (seconds). The regions considered on active stacks were those covered by water (ponds and ditches) or saturated by water (beaches), surface areas consisting of dry, loose material, the roadway along

the stack top, and the thinly crusted stack sides. Only two regions were considered on inactive stacks, the hard, thick-crusted top and the dry, thinly crusted sides. The radon fluxes for each of these regions were determined by measurements (Ho88a, Bl88). A summary of the results is given in Table 13-4. Except for the beaches, which are saturated land masses that protrude into the ponds, sufficient measurements were obtained in each region to result in an average value acceptable for this assessment.[a] Because the beaches are totally saturated with water, small flux values were expected, and additional measurements were considered unnecessary for this assessment.

A generic stack, based on the IMC Corp. stack near Mulberry, Florida, which consists of the regions defined above and is representative of Florida phosphogypsum stacks, was used to estimate the radon-222 source terms. The base area and height of each stack are known (see Table 13-1). The areas of the top and sides were estimated using these dimensions and assuming the stacks to be rectangular (length twice the width) with a 1:3 (0.333) slope to the sides, except for those stacks noted in Appendix 13-A. The areas, so computed, are listed in Appendix 13-B. The fluxes associated with the various regions of the stack and the percent of the regional areas to the total top area are listed in Table 13-5.

For active Florida stacks, 60 percent of the top was considered to be covered by water resulting in no radon release. The fluxes for the other stack regions are the average values from Table 13-4. Roadways on active stacks were considered to consist of 50 percent loose material (20 $pCi/m^2/s$) and 50 percent dry, hard-packed material (6.8 $pCi/m^2/s$), or 13 $pCi/m^2/s$ radium-222. The average radon fluxes for the thick, hard-crusted top surface and dry, thin-crusted sides of inactive stacks are the averages of measured values listed in Table 13-4. The characteristics of idle stacks appear intermediate between those of active and inactive stacks. The top surface is either mostly covered by water (if the stack is a part of the plant water balance) or dry with a thick, hard-crusted surface, similar to an inactive stack. Thus, a conservative radon flux of 4 $pCi/m^2/s$ was applied to the total top area of idle stacks. The radon flux applied to the sides of idle stacks in Florida was 12 $pCi/m^2/s$, the midpoint between the average flux measured on the sides of active and inactive stacks.

Since all phosphogypsum stacks, except for those located in northern Florida, North Carolina, Idaho, Utah, and Wyoming, resulted from processing central Florida phosphate rock, their fluxes were considered the same as on stacks in central Florida (see Table 13-5, Column 2). However, stacks located in Louisiana were considered an exception to this because of significant climatic differences between the two regions that result in a greater rainfall vs. evaporative rate in Louisiana. Fluxes on

(a) Average values are the arithmetic means.

Table 13-4. Results of radon-222 flux measurements on phosphogypsum stacks in Florida (Ho88a, B188).

Stack Region/Facility	Number of Measurements	Flux ($pCi/m^2/s$) Range	Average[a]
		ACTIVE STACKS	
Top			
Loose-Dry Material			
Conserv (Mulberry, FL)	128	2 -340	25
Gardinier (East Tampa, FL)	336	0.2 - 99	20
Grace (Bartow, FL)[b]	519	0.2 - 65	16
Royster (Mulberry, FL)	126	0.6 - 81	21
Beaches[c]			
IMC Corp. (Mulberry, FL)	6	0.35- 0.71	0.5
Roadway (dry-hard pack)			
Grace (Bartow, FL)[b]	23	1.2 - 16	7
Sides			
Royster (Mulberry, FL)	98	1.3 - 23	7
Grace (Bartow, FL)[b]	75	1.7 - 40	11
		INACTIVE STACKS	
Top			
Estech (Bartow, FL)	130	0.6 - 14	4
Sides			
Royster (Mulberry, FL)	99	4 - 44	15

(a) Average values are the arithmetic means.
(b) Now the Seminole Fertilizer Corporation.
(c) Measurements made by IMC Corp. personnel (Ba88).

Table 13-5. Radon-222 flux values applied to various regions of phosphogypsum stacks.

Region of Stack	Flux (Percent of Top Area) pCi/m^2/s					
	Central Florida (a)	North Florida (b)	North Carolina	Louisiana (c)	Idaho (d)	Wyoming and Utah (e)
			ACTIVE STACKS			
Top						
Pond/Ditches	0.0 (60%)	0.0 (60%)	0.0 (60%)	0.0 (60%)	0.0 (25%)	0.0 (25%)
Beaches	0.5 (15%)	0.2 (15%)	0.1 (15%)	0.3 (15%)	0.5 (5%)	0.1 (5%)
Dry material	20 (20%)	8 (20%)	4 (20%)	13 (20%)	4.5 (65%)	1.2 (65%)
Roads	13 (5%)	5 (5%)	3 (5%)	9 (5%)	10 (5%)	3 (5%)
Sides	9	4	2	6	14	4
			INACTIVE STACKS			
Top	4	(f)	(f)	(f)	7	2
Sides	15	(f)	(f)	(f)	9.5	2.5
			IDLE STACKS			
Top	4	(f)	1	2.6	7	(f)
Sides	12	(f)	2	8	9.5	(f)

(a) Values applied to stacks in all states except North Carolina, Louisiana, Idaho, Utah, Wyoming, and in the White Springs region of Florida.
(b) Values apply to the three Occidental Chemical Co. stacks near White Springs, FL (Jo88d, Ma82, Ro79).
(c) St88b.
(d) Si88.
(e) Co88.
(f) Stacks of this category do not exist in this state or region.

the Louisiana stacks were based on the results of measurements made on the sides and beach areas of two Louisiana stacks (St88b). The fluxes that relate to the top-dry material and roads were determined by assuming the same ratios with the sides as on stacks in central Florida, 20/9 and 13/9, respectively, and multiplying these ratios by the flux measured on the sides of the Louisiana stacks, 6 $pCi/m^2/s$ (see Table 13-5, column 5). Except for the stacks noted in Appendix A, areas of stack top and sides were determined assuming a slope to the stack sides of 0.333.

Fluxes associated with stacks located in northern Florida and North Carolina were determined by using measured radium-226 concentrations of 12, 6, and 31 pCi/g for north Florida (Ro79, Ma82, Jo88d), North Carolina[a], and central Florida phosphogypsum, respectively, and scaling to the flux values used for the central Florida stacks. For example, the flux that relates to dry-loose areas of northern Florida stacks is computed to be 8 $pCi/m^2/s$ of radon-222 (12/31 x 20).

The phosphogypsum facilities in Idaho process rock obtained nearby, whereas facilities in both Wyoming and Utah process, or had processed, phosphate rock that is mined near Vernal, Utah. The flux values for stacks located in Idaho, Utah, and Wyoming were determined using a model based on the characteristics and operation of the two J.R. Simplot stacks near Pocatello, Idaho, and differences in the radium-226 concentrations of the phosphogypsum produced. The arid conditions in this region (low rainfall, high rate of evaporation) and the low water content of the phosphogypsum slurry result in stack conditions considerably different from those observed at Florida stacks, especially on the top surface. A much smaller pond (relative to the total top surface area) exists on the top of the active stack, while no water was present on the idle stack, and a thick, hard crust covered a large fraction of the active top surface, which forms rapidly in the dry climate.

These different conditions are reflected in the radon flux values measured on the two J.R. Simplot Co. stacks in Idaho (see Table 13-6). Due to the thick, hard crust, the top surface is similar to the inactive stacks in Florida, while the flux from the sides is not significantly different from that measured in Florida. The radon flux values assumed for each region of the Idaho stacks are listed in Table 13-5. Fluxes on the roadways were not measured but were estimated to be 10 $pCi/m^2/s$ based on the Florida fluxes of 20 $pCi/m^2/s$ for loose material (25 percent of roadway) and 7 $pCi/m^2/s$ for dry, hard-packed material (75 percent of roadway). The percentages of the top areas covered by water and saturated as beach area are much lower than on a Florida stack, while a much higher percentage is considered as dry material. Also, the idle stacks (J.R. Simplot Co.) and inactive stacks (Bunker Hill Co.) in Idaho are considered similar and were assigned identical fluxes for their top and side areas.

(a) Based on unpublished results of analyses conducted at the EPA's Eastern Environmental Radiation Facility.

Table 13-6. Results of radon-222 flux measurements on phosphogypsum stacks in Idaho (Ly88, Ho88b).

	Number of Measurements	Flux ($pCi/m^2/s$) Range	Average
Active Stack			
Top	41	0-20	4.5
Sides	10	4-31	14
Idle Stack			
Top	16	1-30	7.3
Sides	5	2-18	9.5

The stacks in Utah and Wyoming are treated identically to the Idaho stacks because of similar climate and presumed similar facility operation. The radium-226 content of phosphogypsum resulting from phosphate rock mined near Vernal, Utah, is known to be low, about 5 to 8 pCi/g (Co88). Similar to the calculation used above for the northern Florida and North Carolina stack fluxes, concentrations of 6.5, 6.5, and 25 pCi/g radium-226 were used for the Utah, Wyoming, and Idaho phosphogypsum, respectively (Co88, Ho88b). By scaling to the Idaho regional stack values (see Table 13-5, Column 6), fluxes for the Utah and Wyoming stacks were determined. For example, the flux that relates to the sides of the active stack located in Wyoming is 4 $pCi/m^2/s$ radon-222 (6.5/25 x 14).

Estimates of the annual radon-222 emissions from individual phosphogypsum stacks are presented in Table 13-7. These emissions were calculated using the information given in Table 13-5 and the stack top and side areas listed in Appendix 13-B. The resulting emission rates are expressed in Ci/y. For example, the radon-222 emission rate for the IMC Corporation's Mulberry, Florida, stack is determined by the following expression:

$$\begin{aligned}\text{Emission Rate} = \{ & 1.211\times10^6 m^2 \, [0.5\ pCi/m^2/s\ (0.15) \\ & + 20\ pCi/m^2/s\ (0.20) + 13\ pCi/m^2/s\ (0.05)] \\ & + 3.821\times10^5 m^2\ (9\ pCi/m^2/s)\ \} \\ & 10^{-12}\ Ci/pCi \times 3.16 \times 10^7\ s/y \\ = & \ 289\ Ci/y.\end{aligned}$$

Note: This emission rate has been rounded to 290 Ci/y in Table 13-7.

The total emissions from all stacks are approximately 5,700 Ci/y (i.e., the sum of all individual source terms in Table 13-7). About half of the total emissions are from Florida (approximately 2,900 Ci/y).

The last column of Table 13-7 gives the average radon-222 flux values computed for the overall (top and sides) stack surface. The average flux for the 63 stacks ranges from about 12 $pCi/m^2/s$ to 1 $pCi/m^2/s$. Excluding the 10 stacks that consist of low-radium content phosphogypsum, North Carolina (5), northern Florida (3), Utah (1), and Wyoming (1), the average fluxes for active and inactive stacks are 5.9 and 8.2 $pCi/m^2/s$, respectively, and for all 53 stacks the average flux is 7.0 $pCi/m^2/s$. The average flux for the ten stacks that consist of low-radium content phosphogypsum is 1.8 $pCi/m^2/s$. The average flux values for active stacks will increase as the stacks become taller.

13.2.2 Radioactive Particulate Emissions

The emission rates due to vehicular traffic were estimated by using an EPA fugitive dust emissions model (EPA77). This model is applicable to dust particles with effective diameters of 30 um or less and considers the silt content of the soil, moisture, and the average vehicle speed. The emission factors generated by this model yield the quantity of fugitive dust emissions from unpaved roads per vehicle-mile of travel. Wind erosion was not considered because quantities of dust produced from this source are insignificant due to the moisture content of active stacks and the crust that exists on inactive stacks.

The quantity of fugitive dust emissions from vehicular traffic on unpaved roads at a phosphogypsum facility was estimated using the following empirical equation (EPA77):

$$E = (0.81s) \times \frac{S}{30} \times \frac{365-w}{365} \times f \qquad (13\text{-}1)$$

Where: E = Emission Factor, pounds per vehicle-mile
s = Silt content of road surface, percent (100 percent)
S = Average vehicle speed, miles per hour (30 miles/hr)
w = Mean annual number of days with 0.01 inches or more of rainfall (120 days)
f = Average fraction of emitted particles in the <30 um diameter suspended particle size range; particles having diameters greater than 30 um will settle rapidly near the roadway (0.32).

Equation 13-1 is reported to be valid within ± 20 percent for vehicle speeds in the range of 30 to 50 miles per hour (EPA77).

The values shown in the parentheses following the definition of each parameter for Equation 13-1 are believed appropriate to a phosphogypsum facility. Applying these values to Equation 13-1 resulted in an emission factor of 17.4 lbs per vehicle-mile. The total annual emissions from the model stack, 1.97E+7 g/y, was based on an estimated 2,500 miles of traffic per year (10 miles/day X 5 days/week X 50 weeks/year). This distance relates to a 31-ha stack which represents a conservative estimate of the traffic observed at the 30- to 32-ha stacks at Royster and Conserv during the long-term EPA study (Ho88a). The annual radionuclide emissions associated with fugitive dust, listed in Table 13-8, were determined by multiplying the total annual emissions, 1.97E+7 g/y, by the average concentrations of radionuclides in phosphogypsum that are listed in Table 13-3.

To help assess the significance of particulate emissions and the applicability of the above model, airborne particulate samples were collected upwind and downwind of a gypsum stack. High-volume airborne particulate samplers were operated continuously for a four-month period at upwind (460 m southeast) and downwind (115 m northwest) locations of the W.R. Grace[a] stack No. 2 in Bartow, Florida. Background airborne particulate samples were collected concurrently in a region of Polk County, Florida, that is unaffected by the phosphate industry. Filters, replaced weekly, were combined into monthly samples and analyzed for their radionuclide content. Concentrations of radionuclides determined were adjusted for the background contribution and for the small amounts of radionuclides present in unexposed filters (Ho88a). The average net concentrations of radionuclides determined for the upwind and downwind locations are presented in Table 13-9. The activity ratios of the radionuclides measured in the particulate samples do not reflect those in phosphogypsum (see Table 13-3), which strongly indicates that the source of the material collected by the high-volume samplers was not the phosphogypsum stack. Also, the very low radionuclide concentrations measured in the airborne samples, less than a femtocurie per cubic meter, demonstrate the insignificance of this exposure pathway at phosphogypsum stacks.

(a) Now the Seminole Fertilizer Corporation.

Table 13-7. Estimates of annual radon-222 emissions from phosphogypsum stacks.

Facility Name		Location	Rn-222 Emissions (Ci/y)	Average Rn-222 Flux [a] ($pCi/m^2/s$)
Districhem, Inc.		Helena, AR	32	10.4
Agrico Chemical Co.		Bartow, FL	250	5.7
Royster Phosphate, Inc.		Palmetto, FL	220	5.7
Brewster Phosphates		Bradley, FL	92	5.8
CF Industries, Inc.		Plant City, FL	310	6.0
CF Industries, Inc.		Bartow, FL	340	7.2
Conserv, Inc.	1 [b]	Nichols, FL	58	5.7
	2		71	7.0
Estech, Inc.		Bartow, FL	27	7.7
Farmland Industries, Inc.		Bartow, FL	170	5.8
Gardinier, Inc.		Tampa, FL	310	6.9
Seminole Fert. Corp.	1	Bartow, FL	100	4.9
	2		400	5.6
IMC Corp.		Mulberry, FL	290	5.7
Occidental Chemical Co.	1	White Springs, FL	36	2.8
(Suwannee River)	2		35	2.7
Occidental Chemical Co. (Swift Creek)		White Springs, FL	43	2.5
Royster Co.	1	Mulberry, FL	62	6.4
	2		43	7.3
USS Agri-Chemicals, Inc.		Bartow, FL	59	9.1
USS Agri-Chemicals, Inc.		Ft. Meade, FL	120	6.1
Nu-West Industries, Inc.		Conda, ID	97	8.3
J.R. Simplot Co.	1	Pocatello, ID	43	7.9
	2		170	6.4
Bunker Hill Co.	1	Kellogg, ID	6	9.4
	2		13	8.2
	3		50	7.8
Allied Chemical Co.		E. St. Louis, IL	19	8.4
Beker Industries, Corp.		Marseilles, IL	40	6.9
Mobil Chemical Co.		Depue, IL	75	5.9
Northern Petrochemical Co.		Morris, IL	45	5.1
Olin Corp.	1	Joliet, IL	190	6.8
	2		16	6.5
SECO, Inc.		Streator, IL	35	10.7
U.S. Industrial Chemicals Co.		Tuscola, IL	69	6.7
Agrico Chemical Co.	1	Ft. Madison, IA	77	11.7
	2		43	6.7
	3		42	5.5

(a) The Rn-222 flux averaged over all regions of the stack.
(b) Numbers 1, 2, 3, etc., refer to different stacks at a facility.

Table 13-7. Estimates of annual radon-222 emissions from phosphogypsum stacks (continued).

Facility Name		Location	Rn-222 Emissions (Ci/y)	Average Rn-222 Flux [a] ($pCi/m^2/s$)
Agrico Chemical Co.		Donaldsonville, LA	230	4.0
Arcadian Corp.	1	Geismar, LA	57	4.7
	2		26	5.8
	3		21	6.1
	4		12	4.2
Agrico Chemical Co.		Hahnville, LA	11	3.9
Agrico Chemical Co.		Uncle Sam, LA	380	4.2
Nu-South Industries, Inc.		Pascagoula, MS	250	7.8
Farmers Chemical Co.		Joplin, MO	70	7.8
W.R. Grace and Co.	1	Joplin, MO	26	8.1
	2		26	8.1
Texasgulf Chemicals Co.	1	Aurora, NC	8	1.5
	2		13	1.3
	3		24	1.4
	4		21	1.3
	5		20	1.2
Amoco Oil Co.	1	Texas City, TX	31	6.9
	2		4	6.2
Kerley Agricultural Chemicals of Texas, Inc.		Pasadena, TX	30	8.5
Mobil Mining and Minerals Div.	1	Pasadena, TX	83	10.6
	2		110	9.7
	3		130	6.6
Phillips Chemical Co.		Pasadena, TX	46	10.0
Chevron Chemical Co.		Magna, UT	78	2.0
Chevron Chemical Co.		Rock Springs, WY	71	1.2

(a) The Rn-222 flux averaged over all regions of the stack.
(b) Numbers 1, 2, 3, etc., refer to different stacks at a facility.

Table 13-8. Annual radionuclide emissions in fugitive dust from a model 31-ha phosphogypsum stack.

Radionuclide	Emission Rate (Ci/y)	Radionuclide	Emission Rate (Ci/y)
Uranium-238	6.3E-5	Lead-214(a)	6.1E-4
Uranium-234	6.5E-5	Bismuth-214(a)	6.1E-4
Thorium-230	1.0E-4	Lead-210	7.1E-4
Radium-226	6.1E-4	Polonium-210	5.3E-4
Radon-222[a]	6.1E-4		

(a) Assumed to be in radioactive equilibrium with radium-226. This results in a maximum value.

Table 13-9. Average net airborne radionuclide concentrations measured at the W.R. Grace stack.[a]

Location	Average Net Concentrations, pCi/m^3[b]			
	U-238	U-234	Th-230	Ra-226
Upwind	1.0E-4	1.1E-4	1.1E-4	1.1E-4
Downwind	1.5E-4	1.6E-4	1.5E-4	1.9E-4

(a) Now the Seminole Fertilizer Corporation.
(b) Concentrations after background values have been subtracted.

13.2.3 Methodology

The location of the maximum exposed individual was determined at each stack by using official county highway and U.S. Geological Survey maps to locate the residence nearest to the stack in each of 16 annular sectors. In some cases, individual companies supplied updated locations (Jo88c, TFI89). The AIRDOS-EPA (Mo79) and DARTAB (Be81) codes were then used to estimate the maximum exposure to radon-222 and the highest increased chance of lung cancer for an individual in one of these actual residences. The radon-222 decay product equilibrium fraction at the residence was determined as a function of the distance from the stack. The dose equivalents resulting from radioactive particulate emissions were estimated by using airborne pathway models for inhalation, ingestion, ground contamination, and immersion, followed by application of the above computer codes.

Collective risks and dose equivalents for the regional population due to radon-222 and radioactive particulates were calculated from the annual collective exposure (person WLM) and collective dose equivalents (person rem), respectively, using AIRDOS-EPA and DARTAB codes. Exposure pathways were identical to those applied to the maximum exposed individual. The population distribution within 80 km of each stack was determined using the computer program SECPOP (At74), which utilizes 1980 census data to compute the population in each annular sector. Collective exposures to radon-222, expressed in person WLM, were estimated for each stack by multiplying the estimated radon-222 progeny concentration (WL) in each annular sector by the population in that sector and by the conversion factor 51.56 WLM/y per WL. The parameters used in the AIRDOS-EPA code for each stack are shown in Appendix A and in Tables 13-1 and 13-7. Meteorological parameters from selected nearby weather stations were used for each stack. The cumulative WL exposure of each population segment was adjusted using a radon decay product equilibrium fraction that is related to the distance from the center of the stack to that population segment.

An emission height of 1 m was assumed for all stacks. This is a conservative assumption which may overestimate the maximum

individual risk but not significantly in most cases. Figure 13-1 shows the effect of release height on the fatal cancer risk from a model stack with a base area of 121 ha. Beyond a distance of 800 m from the center of the model stack, the individual risk is the same for 1 m and 12.5 m release heights. A more realistic release height may be a value of one-half the physical stack height. For example, a release height of 12.5 m would be assumed for a stack that is 25 m tall. This is reasonable considering that a significant fraction of the radon emissions occurs from the sides of the stack and that radon from both the sides and top of the stack is carried toward the ground near the base of the stack as a result of downwash.

Only 3 of the 63 stacks have physical heights that exceed 30 m. At only 2 of the 60 stacks with physical heights of 30 m or less does an individual reside less than 800 m from the center of the stack. By using the 1-m release height assumption, only two individuals have lifetime fatal cancer risks that may be overestimated by a factor of two or three. The 1-m stack height assumption has essentially no effect on the population risk assessments, because nearly all of the exposed individuals in the regions reside many kilometers from the stack where stack height has no significant influence on the risk calculation.

The maximum annual dose equivalents and the increased risk of fatal cancer to nearby individuals from fugitive dust emissions were estimated by determining the total annual emissions from model stacks using the EPA fugitive dust model (Section 13.2.2, Table 13-8) and applying the AIRDOS-EPA (Mo79) and DARTAB (Be81) codes. The model stacks were assumed to be in Polk County, Florida. An average model stack was derived that had the average base area, 90 ha, of the 27 presently operating phosphogypsum stacks. Also, minimum and maximum generic stacks were considered and assigned base areas of 9 ha and 284 ha, respectively, which reflect the smallest and largest existing active stacks (see Table 13-1). Vehicular traffic on a stack, and thus emissions, is assumed proportional to the stack area. Inactive and idle stacks are assumed to have no vehicular traffic. The maximum exposed individual was assumed to live about 1,750 m from the center of the stacks.

The ICRP lung model was used in this assessment (ICRP66). To apply this model, a 1.0 um (AMAD) particle size was assumed with the following lung clearance classes:

Y class - U-238, U-234, Th-230
W class - Ra-226, Bi-214, Po-210, Pb-210
D class - Pb-214

Collective (population) risks for the region due to fugitive dust emissions from vehicular traffic are based on the assessments of small, average, and large phosphogypsum stacks located in Polk County, Florida, which have areas of 9 ha, 90 ha, and 284 ha, respectively (see Table 13-1). Emissions from the small, average, and large generic stacks were estimated by multiplying

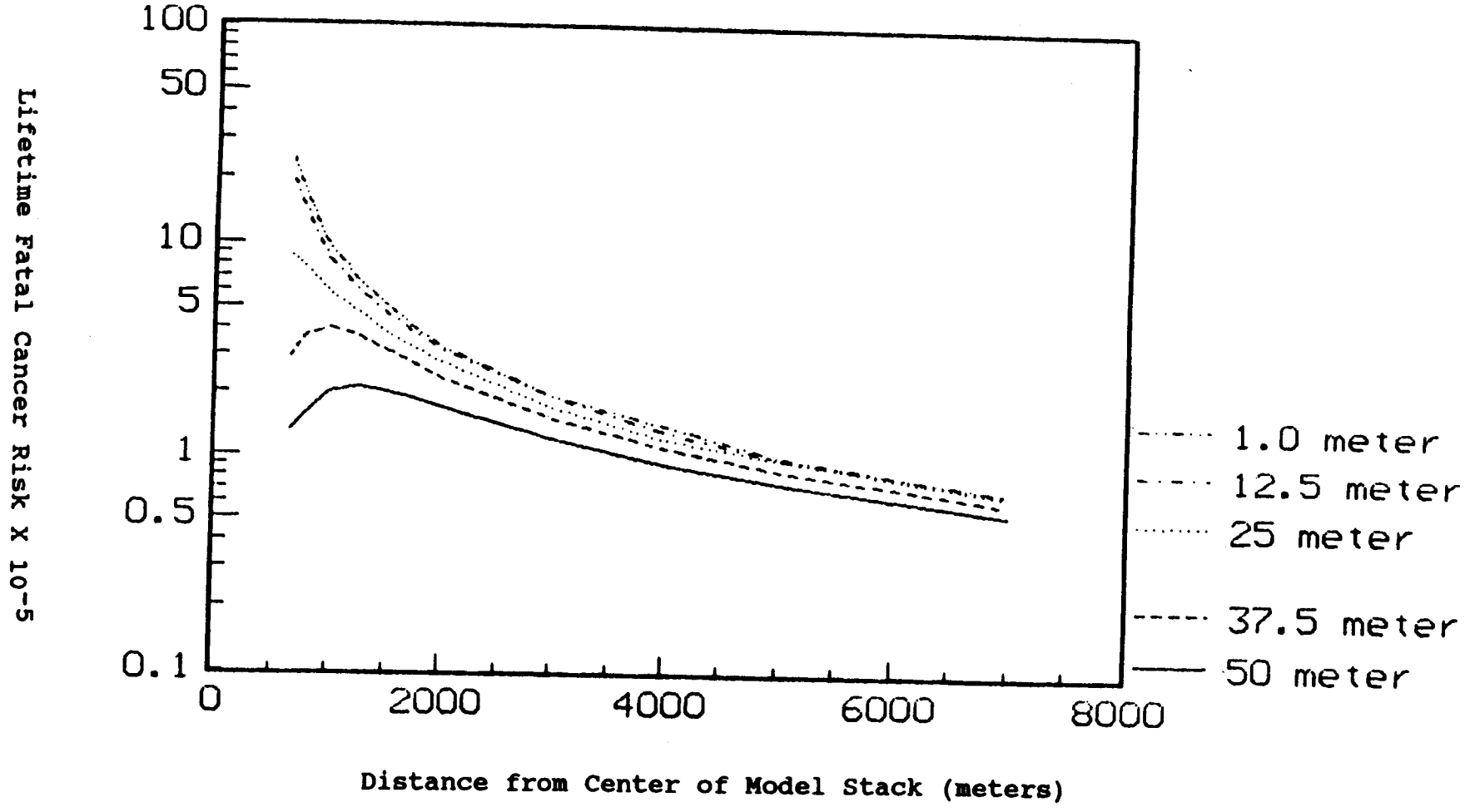

Figure 13-1. Effect of release height on individual risk for a model stack.

the annual radionuclide emissions from a 31-ha stack (Table 13-8) by the ratio of their areas, 0.29, 2.9, and 9.2, respectively, as vehicular traffic on a stack is assumed proportional to the stack area. These annual emissions were then applied to the AIRDOS-EPA and DARTAB codes to complete the assessment. The population and its distribution within 80 km of the model stacks were taken from an earlier EPA generic study performed in Polk County, Florida (EPA84). The meteorological parameters used were taken from the Orlando Jet Port Station.

13.3 RESULTS OF THE HEALTH IMPACT ASSESSMENT

This section contains an assessment of the dose equivalents caused by fugitive dust emissions and the risk of cancer caused by radon-222 and fugitive dust emissions from phosphogypsum stacks. The health impact assessment addresses the following specific topics:

(1) working level exposure and the lifetime fatal cancer risk to the maximum exposed individual from radon-222 at each phosphogypsum stack,

(2) dose equivalent rates and annual fatal cancer risks to the maximum exposed individual from radioactive particulate emissions at three generic stacks with maximum, minimum, and average areas,

(3) the number of fatal cancers committed per year in the regional population[a] at each phosphogypsum stack due to radon-222, and

(4) the collective dose equivalent rates and fatal cancers committed per year in the regional population from radioactive particulate emissions at three generic stacks with maximum, minimum, and average areas.

13.3.1 The Maximum Exposed Individual

13.3.1.1 Risks from Radon-222

In Appendix 13-C, Table 13-C-1 lists the highest individual risks for each of the 63 stacks considered in this assessment. Included for each stack are the location of the individual with respect to distance from the stack and the radon-222 concentration and working-level exposure at that location. The highest lifetime individual risks are on the order of <1 fatal lung cancers in 10,000.

The stacks that result in the 10 highest lifetime individual risks are listed in Table 13-10 in order of descending risk. Also listed are the location of the individual's residence in

(a) The regional population is the total number of people who reside within 80 km of a stack.

Table 13-10. The ten highest individual lifetime risks estimated to result from radon-222 emissions from phosphogypsum stacks.

Facility/Location	Radon Concentration (pCi/l)	Maximum Exposure (WL)	Maximum Lifetime Fatal Cancer Risk to Individual	Distance[a] (meters)
Mobil Mining & Minerals Div., Pasadena, TX #3	2.1E-2	6.5E-5	9E-5	1,000
Olin Corporation, Joliet, IL #1	2.0E-2	6.2E-5	9E-5	900
Mobil Mining & Minerals Div., Pasadena, TX #2	1.9E-2	6.1E-5	8E-5	1,300
Royster Phosphate, Inc., Palmetto, FL	1.8E-2	5.7E-5	8E-5	1,200
Agrico Chemical Co., Uncle Sam, LA	1.5E-2	5.1E-5	7E-5	2,100
Seminole Fertilizer Corp., Bartow, FL #2	1.6E-2	5.1E-5	7E-5	1,200
Mobil Mining & Minerals Div., Pasadena, TX #1	1.4E-2	4.9E-5	7E-5	2,300
C.F. Industries, Plant City, FL	1.5E-2	4.7E-5	6E-5	1,200
Kerley Agricultural Chem. of Texas, Inc., Pasadena, TX	1.3E-2	4.0E-5	6E-5	1,300
NU-West Industries, Inc., Conda, ID	1.3E-2	3.9E-5	5E-5	900

(a) Distance from the center of the stack to the maximum exposed individual.

relation to the center of the stack and the increased concentration and exposure at that location to radon-222 from the stack. The magnitude of the individual risk is a function of the radon-222 source term and the distance and direction of the individual's residence from the stack. Of the 10 stacks causing the greatest individual risks, 4 are in Texas, 3 in Florida, and 1 each in Louisiana, Idaho, and Illinois.

13.3.1.2 Dose Equivalents and Risks from Particulates

The dose equivalent rates to the maximum exposed individual due to fugitive dust emissions from three model phosphogypsum stacks are listed in Table 13-11. The areas of the three model stacks relate to the areas of the smallest (minimum), average, and largest (maximum) currently active stacks. It was assumed that the maximum exposed individual resided 1,750 m from the center of each stack. Only those organ dose equivalents that contribute 10 percent or more to the risk are included in Table 13-11. Just the lung and endosteal bone meet this criterion. The dose equivalent rates to the endosteal bone of the maximum exposed individuals range from a minimum of 0.04 mrem/y to a maximum of about 1.0 mrem/y. The dose equivalent rate to the lung was about 45 percent less.

The last column of Table 13-11 lists the lifetime fatal cancer risks to individuals living 1,750 m from the center of each model stack. These estimated risks are conservative (i.e., overestimated) because the model treats all particles less than 30 um as having an AMAD of 1 um. Even so, these risks due to fugitive dust emissions are one or two orders of magnitude smaller than the risks related to radon-222 emissions (see Table 13-10).

13.3.2 <u>The Regional Population</u>

13.3.2.1 Risks from Radon-222

The 10 regional populations at highest risk of fatal lung cancer due to the radon-222 emissions from phosphogypsum stacks are listed in Table 13-12 (see Appendix C, Table 13-C-2, for the collective risk to the 80-km regional population around each stack). The populations within the 80-km regions are also listed.

Table 13-11. Estimated increased risk of fatal cancer and the dose equ rates from maximum exposure to fugitive dusts for an individual living near phosphogypsum stacks.

Facility[a]	Organ	Dose Equivalent Rate, mrem/y	Maximum Lifetime Risk of Fatal Cancer
Minimum Model Stack	Lung	0.023	8E-8
	Endosteal	0.040	
Average Model Stack	Lung	0.20	7E-7
	Endosteal	0.37	
Maximum Model Stack	Lung	0.57	2E-6
	Endosteal	1.0	

(a) The distance to the maximum exposed individual, as selected by the computer code DARTAB, was 1,750 m at all three stacks.

Table 13-12. The 10 regional populations estimated to receive the highest collective risks from radon-222 emissions from phosphogypsum stacks.

Facility/Location	1980 Population within 80 km	Committed Fatal Cancers per Year (0-80 km)
Mobil Mining and Minerals Div., Pasadena, TX #3	3,000,000	1E-1
Mobil Mining and Minerals Div., Pasadena, TX #2	3,000,000	1E-1
Olin Corp., Joliet, IL #1	7,400,000	1E-1
Mobil Mining and Minerals Div., Pasadena, TX #1	3,000,000	9E-2
Gardinier, Inc., Tampa, FL	2,200,000	5E-2
Phillips Chemical Co., Pasadena, TX	3,000,000	5E-2
C.F. Industries, Inc., Plant City, FL	2,200,000	3E-2
Kerley Agricultural Chemicals, Pasadena, TX	3,000,000	3E-2
Seminole Fertilizer Corp., Bartow, FL #2	1,400,000	3E-2
Agrico Chemical Co., Uncle Sam, LA	1,900,000	3E-2

The higher collective risks result from stacks located within or close to large metropolitan areas. The highest collective risk occurs in the densely populated Houston-Galveston, Texas, area, where it is estimated that a fatal cancer due to radon-222 emissions from the Mobil Mining and Minerals Division, stack #3, will occur about every 10 years. In fact, three of the four stacks causing the highest collective risks (and five of the top ten) are located in Pasadena, Texas, a suburb bordering Houston on the southeast. The Joliet, Illinois, population is also at risk to the extent of about 1 fatal cancer every 10 years due to the Olin Corp. stack, while 1 fatal cancer in 20 years is estimated to occur in the regional population of the Gardinier, Inc. stack which includes the greater Tampa, Florida, area.

An additional output of the DARTAB computer code provides the frequency distribution of lifetime fatal cancer risks for each phosphogypsum stack. It gives the number of people in each of a series of lifetime risk intervals and the number of cancer deaths that occur annually within each risk interval. This information is summarized in Table 13-13 for all of the 63 stacks assessed in the United States. These data reflect the number of deaths expected to occur annually within the 0-80 km population listed. For example, 95 million people are at risk in the 63 regional populations due to their exposure to radon-222 from all phosphogypsum stacks, and, within that population, less than one fatal lung cancer is expected to occur per year.

Table 13-13. Estimated distribution of the fatal cancer risk caused by radon-222 emissions from phosphogypsum stacks.

Risk Interval	Number of Persons[a]	Deaths/y
1E-1 to 1E+0	0	0
1E-2 to 1E-1	0	0
1E-3 to 1E-2	0	0
1E-4 to 1E-3	0	0
1E-5 to 1E-4	400,000	9E-2
1E-6 to 1E-5	17,000,000	5E-1
< 1E-6	77,000,000	3E-1
Totals	95,000,000	9E-1

(a) Populations are overestimated because they have not been corrected for overlap.

Similar distributions are presented in Appendix 13-D for five regions that contain groupings of 3 to 10 phosphogypsum stacks sited within a relatively small area. These distributions have been summarized in Table 13-14. This summary presents the regional populations and the number of estimated committed fatal cancers per year resulting from the exposure to radon-222 from all regional phosphogypsum stacks. The region of greatest risk is Houston-Galveston, with about one fatal cancer committed every three years due to the seven phosphogypsum stacks located in Pasadena and Texas City, Texas. In the Bartow, Florida, regional population, the committed fatal cancer rate drops to about 1 fatal cancer in 10 years.

Table 13-14. A summary of the committed fatal cancers due to radon-222 emissions from phosphogypsum stacks located in five regions in the United States.

Region	No. of Stacks[a]	Population[b]	Total Cancer Deaths per year
Houston/Galveston, TX	7	20,000,000	0.4
Bartow, FL	10	18,000,000	0.1
Northeast, IL	6	24,000,000	0.1
Baton Rouge/New Orleans, LA	7	8,900,000	0.05
Pocatello, ID	3	420,000	0.004

(a) See Appendix 13-D to identify stacks included in each region.
(b) Most regional populations are significantly overestimated because they have not been corrected for overlap.

A large portion of the populations within these five regions is exposed to emissions from more than one stack. This results in an overestimate of the population at risk while underestimating the risk to some individuals. These distributions do not account for overlap (exposure from multiple stacks) in the exposed populations. An assessment for some of the stacks in Florida suggests that the number of persons exposed in each geographic area is overestimated by the number of stacks in the area, while the risk is generally understated by the ratio of the total emissions in that area to the stack with the highest emissions in the area. For one section of Florida, it is estimated that the number of persons exposed is overestimated by a factor of seven, while the risks are understated by a factor of three.

13.3.2.2 Risks from Radioactive Particles

The collective risks to the regional (0-80 km) population from the radioactivity associated with fugitive dust emissions from the three model phosphogypsum stacks are tabulated in Table 13-15. The population, listed in the second column, is assumed to be the same within the three regions. The risk for the average of the 27 active stacks is 2E-4, or about two fatal lung cancers in 10,000 years. In the last line of Table 13-15 is an estimate of the collective risk, due to fugitive dust emissions, to all 27 regional populations within 80 km of an active phosphogypsum stack. This risk, 5E-3 (2E-4 x 27 stacks), is a maximum risk because all particles less than 30 um are assumed in the assessment to have an AMAD of 1 um and to be respirable.

Table 13-15. Estimated number of fatal cancers from fugitive dust emissions for the population living within 80 km of the model phosphogypsum stacks.

Facility	Population within an 80-km Radius	Collective Risk (Committed Fatal Cancers per Year)
Minimum Model Stack	1,500,000	2E-5
Average Model Stack	1,500,000	2E-4
Maximum Model Stack	1,500,000	7E-4
Total United States[a]	41,000,000	5E-3

(a) Collective risk to all individuals living within 80 km of the 27 active phosphogypsum stacks, assuming the same generic population for each stack (i.e., 27 x 1,500,000 = 40,500,000).

13.4 SUPPLEMENTARY CONTROL OPTIONS AND COSTS

13.4.1 Introduction and Summary

This section deals with the cost and effectiveness of mitigating radon emissions from gypsum stacks.

A preliminary examination of various means of mitigating emissions from a representative Florida gypsum stack led to the conclusion that the only practical mitigation technique is covering the stacks with a layer of earth sufficient to reduce the emissions to the desired level (Be88b). A new method of gypsum disposal is being used in North Carolina, where the gypsum is disposed of in mined-out areas. However, this disposal technique is still in development and may not be practical in Florida which

has a high water table. None of the other states, except Idaho, Utah, and Montana, mine phosphate ore and therefore have no mined-out areas to use. For this reason, disposal in mined-out areas was not considered here.

Three different approaches for covering a representative Florida gypsum stack with earth were examined (Be88b). The first is covering the stack after it has reached the end of its useful life. The second is covering the sides of the stack as its height increases, but leaving the top uncovered until the stack is closed. (The top cannot be covered during operation because it contains the settling pond.) The third is phased disposal of gypsum by means of a staged gypsum stack.

The only option considered here is the first, that of covering the stack after it has reached the end of its useful life.

The second option, covering the sides as the stack grows, reduces the emissions only during the life of the stack, so that over a 50- to 100-year period the reduction is only about 10 percent more than that of the first option. The cost of this second option is not much greater than that of covering the entire stack when it is closed ($53 versus $56 million for the representative Florida stack).

In the third option, a large stack is built in stages, with two sides of each stage being covered with earth as the stage grows, and the top of each stage being covered soon after the next stage is put into operation. This approach (compared to the option of covering the sides as they grow) reduces emissions only while the stack is operating. It is estimated that in a 50-year period, the radon emissions are about 36 percent less than in the case where the sides of a single-stage stack are covered as it grows and the top is covered at the end (Be88b). Over a 100-year period, the reduction would be about 28 percent, and for longer periods of time, the percentage reduction would be less. At very long times, the staged stack gives off somewhat more radon than the normal stack, because its surface area is somewhat larger.

The estimated cost of covering the representative Florida multi-stage stack is not greatly different from that of covering a single stack of equal volume. For the 50-meter high model stack with a base area of 121 hectares, the costs are about 10 percent higher for the staged stack, $60 million versus $55 million (Be88b). However, there are significant uncertainties regarding its practicability. First, while the multi-stage stack reduces emissions in the short term, eventually it emits more radon than the large, single stack because it has more surface area. Second, if the number and size of the stages are not carefully selected, the multi-stage stack might always emit more radon than a single stack. Third, while the multi-stage approach appears to be a feasible method, there may be practical problems not apparent at this time.

Because the mitigation cost and effectiveness are not much different, and because of the questionable practicability, the staged-stack approach is not considered here.

The method used to estimate emissions, cost, and mitigation effectiveness was first to group the existing gypsum stacks into geographic categories based upon the stack characteristics (method of construction and radon flux) and the effectiveness of earth cover (which depends on the rainfall and evaporation rates and the soil characteristics). Within each group, operating and inactive stacks were considered separately, because inactive stacks can be covered immediately, while active stacks cannot. Idle stacks were considered to be inactive.

Because active stacks cannot be covered completely until the end of their useful life, their size was estimated at the end of their life using the method described in Appendix 13-E. This leads to much larger sizes for the active stacks than the present size used in the first part of this chapter, and hence a somewhat larger value for the radon emissions and risk. This is a more realistic approach than that of estimating the cost and effectiveness of covering stacks that, in reality, will continue to operate.

The risks associated with the various radon emission rates were estimated by the method described in Appendix 13-E.

Reducing the flux to 6 $pCi/m^2/s$ reduces the annual nationwide deaths per year from 1 to 0.9 at a cost of about $0.5 billion dollars. Reducing the flux to 2 $pCi/m^2/s$ reduces the annual nationwide deaths per year to 0.3 at a cost of about $1 billion.

13.4.2 Determination of Emissions, Costs, and Effectiveness

The existing stacks were separated into four groups based on their differing cover effectiveness. The effectiveness of earth cover is indicated by the value of b in Table 13-16. The larger the value of b, the less radon will escape through a given thickness of cover. Appendix 13-E describes the method used to estimate b. The groups based on effectiveness are as follows:

1. Florida, Arkansas, North Carolina, and Texas, where b lies between 1.6 and 1.8 m^{-1};

2. Iowa, Illinois, and Missouri, where b lies between 1.3 and 1.4 m^{-1};

3. Louisiana and Mississippi, where b lies between 2.2 and 2.4 m^{-1}; and

4. Idaho, Utah, and Wyoming, where b lies between 0.77 and 0.91 m^{-1}.

Table 13-16. Characteristics of gypsum stacks.

State/Company	Location	Area	Height	RN	EVP	b	Status	Capacity
Arkansas								
Districhem, Inc.	Helena	9	23	52	43	1.8	C	U
Florida								
Royster	Mulberry	18	24	51	48	1.7	O	230
Royster	Mulberry	30	18	51	48	1.7	O	230
USX (Ft. Meade Chemical)	Bartow	20	18	51	48	1.7	C	430
Conserv	Nichols	31	27	54	48	1.8	O	180
Conserv	Nichols	32	10	54	48	1.8	O	180
Occidental	White Springs	40	20	55	48	1.8	O	1020
Occidental	White Springs	40	22	55	48	1.8	O	1020
Occidental	White Springs	53	18	55	48	1.8	O	1020
Estech	Agricola	40	9	54	48	1.8	C	U
Brewster	Bradley	50	9	51	48	1.7	C	U
USX (Ft. Meade Chemical)	Fort Meade	61	23	51	48	1.7	O	430
Seminole Fert. Corp.	Bartow	64	6	54	48	1.7	O	280
Seminole Fert. Corp.	Bartow	227	27	54	48	1.8	O	280
Farmland Industries	Pierce	92	20	51	48	1.7	O	520
Royster Phosphate, Inc.	Palmetto	121	21	47	48	1.6	O	170
Gardinier	Tampa	138	54	47	48	1.6	O	650
CF Industries	Bartow	146	40	51	48	1.7	I	630
Agrico	Bartow	140	21	54	48	1.8	O	380
CF Industries	Plant City	162	28	53	48	1.7	O	760
IMC	Mulberry	157	24	51	48	1.7	O	1550
Idaho								
J.R. Simplot	Pocatello	17	12	11	40	0.83	I	320
J.R. Simplot	Pocatello	81	20	11	40	0.83	O	320
Nu-West Industries	Conda	36	24	14	35	0.84	O	280
Bunker Hill Co.	Kellogg	2	8	17	25	0.97	C	U
Bunker Hill Co.	Kellogg	5	8	17	25	0.97	C	U
Bunker Hill Co.	Kellogg	20	8	17	25	0.97	C	U

Area = Base area, hectares.
Height = Average height, meters.
RN = Rainfall rate, in/yr.
Evap. = Lake evaporation rate, in/yr.
b = Coefficient in $R = \exp(-bx)$, where R is ratio of the covered to the uncovered radon flux and x is cover thickness, meters.
U = Unknown
Status = O is operating (active), I is idle (considered to be inactive for the purpose of this analysis), and C is inactive (closed).
Cap. = Plant P_2O_5 production, thousands of metric tons/yr.

Table 13-16. Characteristics of gypsum stacks (continued).

State/Company	Location	Area	Height	RN	EVP	b	Status	Capacity
Illinois								
Allied Chemical	E. St. Louis	7	9	36	39	1.3	C	U
Olin	Joliet	10	5	36	35	1.4	C	110
Olin	Joliet	35	27	36	35	1.4	I	110
SECO, Inc.	Streator	10	18	35	36	1.3	C	U
Beker	Marseilles	18	9	34	37	1.3	C	U
Northern Petrochemical	Morris	28	4	34	36	1.3	C	U
U.S. Industial Chemical	Tuscola	32	16	38	36	1.4	C	U
Mobil	Depue	40	13	35	38	1.3	O	110
Iowa								
Agrico	Ft. Madison	20	9	36	39	1.3	C	U
Agrico	Ft. Madison	20	30	36	39	1.3	C	U
Agrico	Ft. Madison	24	5	36	39	1.3	C	U
Louisiana								
Agrico	Hahnville	9	4[a]	62	43	2.3	O	420
Arcadian Corp.	Geismar	9	6[a]	63	43	2.3	O	160
Arcadian Corp.	Geismar	11	12[a]	63	43	2.3	I	160
Arcadian Corp.	Geismar	14	12[a]	63	43	2.3	I	160
Arcadian Corp.	Geismar	38	20[a]	63	43	2.3	I	160
Louisiana								
Agrico	Donaldsonville	203	12[a]	60	43	2.2	O	420
Agrico	Uncle Sam	284	20[a]	60	43	2.2	O	800
Mississippi								
Nu-South Industries	Pascagoula	101	20[b]	64	42	2.4	O	220
Missouri								
W.R. Grace	Joplin	10	U	40	44	1.4	C	U
W.R. Grace	Joplin	10	U	40	44	1.4	C	U
Farmers Chemical Co.	Joplin	28	15	40	44	1.4	C	U

Area = Base area, hectares.
Height = Average height, meters.
RN = Rainfall rate, in/yr.
Evap. = Lake evaporation rate, in/yr.
b = Coefficient in $R = \exp(-bx)$, where R is ratio of the covered to the uncovered radon flux and x is cover thickness, meters.
U = Unknown
Status = O is operating (active), I is idle (considered to be inactive for the purpose of this analysis), and C is inactive (closed).
Cap. = Plant P_2O_5 production, thousands of metric tons/yr.
(a) Three have a 1:5 slope; one has a 1:3 slope; and two have a 1:8 slope. The slope of one stack is unknown.
(b) This stack has a 1:10 slope.

Table 13-16. Characteristics of gypsum stacks (continued).

State/Company	Location	Area	Height	RN	EVP	b	Status	Capacity
North Carolina								
Texasgulf	Aurora	16	26	52	43	1.8	I	1150
Texasgulf	Aurora	30	18	52	43	1.8	I	1150
Texasgulf	Aurora	51	38	52	43	1.8	I	1150
Texasgulf	Aurora	51	19	52	43	1.8	I	1150
Texasgulf	Aurora	51	20	52	43	1.8	O	1150
Texas								
Amoco	Texas City	2	3	52	46	1.8	I	U
Amoco	Texas City	14	11	52	46	1.8	I	U
Kerley Agri Chem	Pasadena	11	11	48	46	1.7	C	U
Phillips Chemical	Pasadena	14	27	48	46	1.7	I	U
Mobil	Pasadena	24	27	48	46	1.7	C	220
Mobil	Pasadena	36	27	48	46	1.7	C	220
Mobil	Pasadena	61	30	48	46	1.7	O	220
Utah								
Chevron Chemical	Magna	121	5	16	55	0.91	C	90
Wyoming								
Chevron Chemical	Rock Springs	182	10	8	45	0.77	O	180

Area = Base area, hectares.
Height = Average height, meters.
RN = Rainfall rate, in/yr.
Evap. = Lake evaporation rate, in/yr.
b = Coefficient in $R = \exp(-bx)$, where R is ratio of the covered to the uncovered radon flux and x is cover thickness, meters.
U = Unknown
Status = O is operating (active), I is idle (considered to be inactive for the purpose of this analysis), and C is inactive (closed).
Cap. = Plant P_2O_5 production, thousands of metric tons/yr.

Differing stack construction techniques divide the stacks into three groups:

1. Louisiana and Mississippi, where the slopes of the sides are more gentle (about 1:5 to 1:10) than in the rest of the country;

2. North Carolina, where the slopes of the sides are about 1:1.8; and

3. the rest of the country where the slopes are generally about 1:3.

The radon flux and fraction of the top surface of the stack that is covered by water separate the stacks into the following three groups:

1. Idaho, Utah, and Wyoming, where the fraction of top surface covered by water is about half that of other regions and the radium content of the gypsum is somewhat lower;

2. North Carolina and northern Florida where the radium content of the gypsum is lower; and

3. all others.

By examining stacks in the following five groups, these differences can be accounted for:

1. Florida (except northern Florida), Texas, and Arkansas;

2. Illinois, Iowa, and Missouri;

3. Louisiana and Mississippi;

4. North Carolina and northern Florida; and

5. Idaho, Utah, and Wyoming.

Table 13-17 contains the mean characteristics of the stacks in each group.

The average radon flux, based on the entire stack surface area, is given in Table 13-18 along with the total radon emissions and the thicknesses of earth cover required to reduce the average flux to 6 and 2 $pCi/m^2/s$. See Appendix 13-E for the method used to calculate the effect of earth cover.

The cost of reducing the average radon flux to 6 and 2 $pCi/m^2/s$ is given in Table 13-19. There are no gypsum stacks with an average flux greater than 20 $pCi/m^2/s$, so no mitigation cost would be incurred to reach this level. The costs were estimated using the unit costs and methods described in

Appendix 13-E. Estimates include the cost of a drain system and synthetic liner for the top. Note that in some cases less than one foot (0.3 meters) of earth is required to reduce the average radon flux to 6 or 2 $pCi/m^2/s$. For these cases, a minimum of one foot of earth is assumed because that is about the minimum required to support vegetation.

The estimated costs of covering both active and inactive stacks are based upon the mean surface area in each group calculated, using the method described in Appendix 13-E. Table 13-19 gives the cost by group of reducing the radon flux to 6 and 2 $pCi/m^2/s$. The estimated cost for the entire population of stacks is $0.5 billion if the radon flux were to be limited to 6 $pCi/m^2/s$, and $1 billion if it were to be limited to 2 $pCi/m^2/s$. Continuing costs for cover and drain system maintenance are estimated to be about $10 million per year.

Table 13-20 gives the estimated cancer deaths for each group of states for the three cases of no action, reduction of the radon flux to 6 $pCi/m^2/s$, and reduction of the radon flux to 2 $pCi/m^2/s$. The estimated risk for these cases was obtained by scaling the risk from Table 13-C-2 by the ratio of the total emissions for each group in Table 13-18 to the total emissions for each group from Table 13-7 (see Appendix 13-E). The total risk with no action is estimated to be one cancer death per year; with radon controlled to 6 $pCi/m^2/s$, it is 0.8 cancer deaths per year; and with radon controlled to 2 $pCi/m^2/s$, it is 0.3 cancer deaths per year.

Table 13-17. Mean characteristics of the stacks in each group.

	Mean Base Area (ha)	Height (m)	Average Side Area (ha)	Average Top Area (ha)	Estimated Life (y)	Total Number
Active Stacks						
Florida, Texas, & Arkansas	91	83 (22) [a]	83	12	39	14
Illinois, Iowa, & Missouri	63	81 (19)	62	3.5	54	2
Louisiana & Mississippi	149	47 (13)	14	13	23	4
North Carolina & N. Florida	100	92 (20)	96	83	64	4
Idaho, Utah, & Wyoming	100	92 (18)	96	8.3	64	3
Inactive Stacks						
Florida, Texas, & Arkansas	31	25	20	12	-	11
Illinois, Iowa, and Missouri	18	12	5.9	12	-	12
Louisiana & Mississippi	21	15	10	11	-	3
North Carolina	37	25	13	25	-	4
Idaho, Utah, & Wyoming	33	8	4.3	29	-	5

(a) Estimated-height of mean stack at closure. Values in parentheses are the mean actual heights of each group.

Table 13-18. Radon emissions from grouped gypsum stacks.

Location	Average Radon Flux ($pCi/m^2/s$)	Cover Thickness (m) to Reduce Flux to 6 ($pCi/m^2/s$)	2	Total Radon Emissions, Ci/y No Cover	6 ($pCi/m^2/s$)	2
<u>Active Stacks</u>						
Florida, Texas, & Arkansas	8.4	0.30(0.20)*	0.84	3,500	2,500	840
Illinois, Iowa, & Missouri	8.8	0.30(0.29)	1.1	360	250	82
Louisiana & Mississippi	8.6	0.30(0.16)	0.64	1,600	1,100	380
North Carolina & N. Florida	2.6	0	0.30(0.21)	190	190	120
Idaho, Utah, & Wyoming	13	0.94	2.2	1,300	590	200
<u>Inactive Stacks</u>						
Florida, Texas, & Arkansas	8.3	0.30(0.19)	0.84	1,200	660	220
Illinois, Iowa, & Missouri	7.5	0.30(0.18)	1.0	520	420	140
Louisiana & Mississippi	7.8	0.30(0.11)	0.59	160	120	40
North Carolina	1.3	0	0	65	65	65
Idaho, Utah, & Wyoming	7.3	0.30(0.22)	1.5	380	310	100
Total Radon Emissions, Ci/y				9,300	6,200	2,100

* Values shown in parentheses are actual thicknesses needed to achieve indicated reduction. For cost purposes, a minimum value of one foot (0.3 meters) was used.

Table 13-19. Cost of mitigation.

Location	Cost, Millions of 1987 Dollars: Radon Flux of 6 $pCi/m^2/s$	Radon Flux of 2 $pCi/m^2/s$
Florida, Texas, & Arkansas	180	390
Illinois, Iowa, & Missouri	48	110
Louisiana and Mississippi	64	120
North Carolina	0[a]	24
Idaho, Utah, & Wyoming	160	300
Total U.S.	450	940

(a) Flux from North Carolina stacks is less than 6 without mitigation.

Note: There are no stacks with an average radon flux greater than 20 $pCi/m^2/s$.

Table 13-20. Risk of cancer death.

Location	Risk, Cancer Deaths per Year		
	No Action	Radon Flux Reduced to 6 $pCi/m^2/s$	Radon Flux Reduced to 2 $pCi/m^2/s$
Florida, Texas, & Arkansas	0.8[a]	0.5	0.2
Illinois, Iowa, & Missouri	0.2	0.1	0.5
Louisiana & Mississippi	0.07	0.05	0.02
North Carolina	0.01	0.01	0.01
Idaho, Utah, & Wyoming	0.02	0.01	0.004
Total U.S.	1[b]	0.8	0.3

(a) Estimate rounded to one significant figure.
(b) Totals computed from results to two significant figures and rounded to one significant figure.

13.5 REFERENCES

Ap88 Appel, B.D., Woodward-Clyde Consultants, Oakland, CA, written communication, July 1988.

At74 Athey, T.W.; Tell, R.A.; and Janes, D.E., "The Use of an Automated Data Base in Population Exposure Calculations," from Population Exposures, Health Physics Society, CONF-74018, October 1974.

Ba88 Baretincic, J.M., IMC Fertilizer, Inc., Mulberry, FL, written communication, June 1988.

Be88a Beal, S., SC&A, Inc., McLean, VA, oral communication, March 1988.

Be88b Beal, S.K. and Thompson, S., "Preliminary Assessment of Cost and Effectiveness of Mitigating Radon Emissions From Phosphogypsum Stacks," Prepared by S. Cohen and Associates, Inc. for the U.S. EPA, Contract No. 68-02-4375, Work Assignment No. 1-20, McLean, VA, June 1988.

Be81 Begovich, C.L.; Eckerman, K.F.; Schlatter, E.C.; Ohr, S.Y; and Chester, R.O., "DARTAB: A Program to Combine Airborne Radionuclide Environmental Exposure Data With Dosimetric and Health Effects Data to Generate Tabulations of Predicted Health Impacts," ORNL-5692, Oak Ridge National Laboratory, Oak Ridge, Tennessee, August 1981.

Bl88 Blanchard, R.L. and Horton, T.R., "Supplementary Radon-222 Flux Measurements on Florida Phosphogypsum Stacks," SC&A, Inc., McLean, VA, Unpublished, June 1988.

BOM85 U.S. Bureau of Mines, "Minerals Yearbook," 1985.

Co88 Cook, L.M., Chevron Chemical Co., written communication to R. Guimond, Office of Radiation Programs, EPA, Washington, DC, August 1988.

EPA77 U.S. Environmental Protection Agency, Office of Air and Waste Management, Office of Air Quality Planning and Standards, "Compilation of Air Pollutant Emission Factors," Third Edition, December 1977.

EPA84 U.S. Environmental Protection Agency, "Radionuclide Background Information Document for Final Rules," U.S. Environmental Protection Agency Report, EPA 520/1-84-022, October 1984.

Fl88 Florida Institute of Phosphate Research, Newsletter, Vol. VIII, No. 4, Winter 1988.

Gu75 Guimond, R.J. and Windham, S.T., "Radioactivity Distribution in Phosphate Products, By-Products, Effluents, and Wastes," Technical Note ORP/CSD-75-3, U.S. EPA, Office of Radiation Programs, Washington, DC, August 1975.

Ha85 Hartley, J.N. and Freeman, H.D., "Radon Flux Measurements on Gardinier and Royster Phosphogypsum Piles Near Tampa and Mulberry, Florida," EPA 520/5-85-029, September 1985.

Ho88a Horton, T.R.; Blanchard, R.L.; and Windham, S.T., "A Study of Radon and Airborne Particulates at Phosphogypsum Stacks in Central Florida," U.S. Environmental Protection Agency Report, EPA 520/5-88-021, October 1988.

Ho88b Horton, T.R., "Idaho Radon Flux Measurements and Source Term Determinations," Unpublished Report for SC&A, Inc., Montgomery, AL, September 1988.

ICRP66 International Commission on Radiation Protection, Task Group on Lung Dynamics, "Deposition and Retention Models for Internal Dosimetry of the Human Respiratory Tract," Health Physics 12, 173-207, February 1966.

Jo88a Johnson, K., The Fertilizer Institute, Washington, DC, oral communication, March 1988.

Jo88b Johnson, K., The Fertilizer Institute, Washington, DC, written communication to Barry Parks, USEPA, ORP, Las Vegas, NV, August 1988.

Jo88c Johnson, K., The Fertilizer Institute, Washington, DC, written communication to Barry Parks, USEPA, ORP, Las Vegas, NV, October 4, 1988.

Jo88d Johnson, K., The Fertilizer Institute, Washington, D.C., written communication to T. McLaughlin, USEPA, ORP, Washington, D.C., December 1988.

Kr88 Kramer, C., Jack Faucett Associates, Bethesda, MD, written communication to T.R. Horton, SC&A, Inc., June 24, 1988.

Li80 Lindeken, C.L., "Radiological Considerations of Phosphogypsum Utilization in Agriculture," in Proceedings of the International Symposium on Phosphogypsum, Lake Buena Vista, FL, November 5-7, 1980.

Ll85 Lloyd, G.M., "Phosphogypsum--A Review of the Florida Institute of Phosphate Research Programs to Develop Uses for Phosphogypsum," Florida Institute of Phosphate Research, Publ. No. 01-000-035, December 1985.

Ly88 Lyon, R.J., Office of Radiation Programs - Las Vegas Facility, Las Vegas, NV, written communication, June 1988.

Ma82 May, S. and Sweeney, J.W., "Assessment of Environmental Impacts Associated with Phosphogypsum in Florida," Bureau of Mines, U.S. Department of Interior, Report of Investigations 8639, 1982.

Mo79 Moore, R.E.; Baes, C.F. III; McDowell-Boyer, L.M.; Watson, A.P.; Hoffman, F.O.; Pleasant, J.C.; and Miller, C.W., "AIRDOS-EPA: A Computerized Methodology for Estimating Environmental Concentrations and Dose to Man From Airborne Releases of Radionuclides," EPA 520/1-79-009, Oak Ridge National Laboratory for U.S. EPA, Office of Radiation Programs, Washington, DC, December 1979.

Ni88 Nifong, G.D., Florida Institute of Phosphate Research, written communication to T.R. Horton, SC&A, Inc., February 29, 1988.

PEI85 PEI Associates Inc., "Data Describing Phosphogypsum Piles," EPA Contractor report--Contract No. 68-02-3878, Work Assignment No. 10, Cincinnati, OH, May 1985.

Ro79 Roessler, C.E., Smith, Z.A., and Bolch, W.E., "Uranium and Radium-226 in Florida Phosphate Materials," Health Physics 37, 269, September 1979.

Ro86 Roessler, C.E., "Radiological Assessment of the Application of Phosphogypsum to Agricultural Land," paper submitted for Proceedings of the Second International Symposium on Phosphogypsum, December 10-12, 1986.

Se88 Sensintaffar, E.L., USEPA, Eastern Environmental Radiation Facility, Environmental Studies Branch, personal communication, September 1988.

Si85 Sims, B.E., Texas Farm Products Company, Nacogdoches, TX, written communication, November 1985.

Si88 Simplot Company, written communication from J.F. Cochrane, J.R. Simplot Co., Pocatello, ID, to Doug Chambers, SENES Consultants, LTD., Richmond Hill, Ontario, Canada, April 15, 1988.

St88a Stauffer Chemical Company, personal communication, June 1988.

St88b Stewart, S.P., Agrico Chemical Company, New Orleans, LA, written communication to Richard Blanchard, SC&A, Inc., Montgomery, AL, December 1988.

TFI89 The Fertilizer Institute, "Comments to the Environmental Protection Agency Concerning Proposed NESHAPS for Radionuclides," p. 108, Washington, DC, May 15, 1989.

Wa88a Walker, R., Freeport Chemical Company, Uncle Sam, LA, oral communication, January 1988.

Wa88b Walker, R., Freeport Chemical Company, Uncle Sam, LA, oral communication, July 1988.

Wi88 Winn, E.B., Jr., Texasgulf, Inc., written communication to S.K. Beal, SC&A, Inc., August 1988.

APPENDIX 13-A

Assumed Slopes of Phosphogypsum Stack Sides Used to Compute Surface Areas

The only stack dimensions available for this assessment were the heights and base areas. To compute the top and side areas necessary for determining the radon-222 source terms, the slope of the sides must be known. Selection of a slope for the stack sides was based on observations, personal communications, the literature(a), and particularly a consideration of a height-slope combination that would result in a reasonable top surface area.

A value of 1:3 (0.333) was used for the slope of all stack sides except for the following stacks:

Facility	Stack	Assumed Slope
Districhem Inc., Helena, AR		1:2 (0.500)
Seminole Fertilizer Corp., Bartow, FL		1:2.5 (0.400)
Agrico Chemical Company, Donaldsonville, LA		1:5 (0.200)
Arcadian Corp., Geismar, LA	2	1:5 (0.200)
	3	1:5 (0.200)
	4	1:5 (0.200)
Agrico Chemical Co., Hahnville, LA	1	1:5 (0.200)
Agrico Chemical Co., Uncle Sam, LA	1	1:8 (0.125)
Nu-South Industries, Inc., Pascagoula, MS	1	1:10 (0.100)
Texasgulf Chemicals Co., Aurora, NC	1	1:1.7 (0.558)
	2	1:2.2 (0.450)
	3	1:2.1 (0.476)
	4	1:2.2 (0.450)
	5	1:1.6 (0.625)

(a) Beal, S.K. and Thompson, S., "Preliminary Assessment of Cost and Effectiveness of Mitigating Radon Emissions From Phosphogypsum Stacks," Prepared by S. Cohen and Associates, Inc. for the U.S. EPA, Contract No. 68-02-4375, Work Assignment No. 1-20, McLean, VA, June 1988.

APPENDIX 13-B

Dimensions of Phosphogypsum Stacks Used to Calculate Radon-222 Source Terms

Table 13-B-1. Estimated dimensions and areas of phosphogypsum stacks.

Facility/Location		Length, m[a]	Width, m[a]	Height, m	Top Area, ha[b]	Side Area, ha
Districhem Inc., Helena, AR		424.3	212.1	23	3.991	5.600
Agrico Chemical Co., Bartow FL		1,673.3	836.7	21	109.966	31.664
Royster Phosphate, Inc., Palmetto FL		1,555.6	777.8	21	93.181	29.318
Brewster Phosphates, Bradley, FL		1,000.0	500.0	9	42.192	8.231
C.F. Industries, Inc., Plant City, FL		1,800.0	900.0	28	119.462	44.839
C.F. Industries, Inc., Bartow, FL		1,708.8	854.4	40	90.243	58.773
Conserv, Inc., Nichols, FL	#1[c]	800.0	400.0	10	25.160	7.210
	#2	787.4	393.7	27	14.491	17.402
Estech, Inc., Bartow, FL		469.0	234.5	9	7.491	3.697
Farmland Industries, Inc., Bartow, FL		1,356.5	678.2	20	69.021	24.219
Gardinier, Inc., Tampa, FL		1,661.3	830.7	54	67.761	74.043
Seminole Fert. Corp., Bartow, FL	#1	1,131.4	565.7	6	58.023	6.303
	#2	2,130.7	1,065.4	27	185.680	44.508
IMC Corporation, Mulberry, FL		1,772.0	886.0	24	121.106	38.209
Occidental Chemical Co.,	#1	894.4	447.2	22	24.031	16.830
White Springs, FL	#2	894.4	447.2	20	25.338	15.452
(Suwannee River)						
Occidental Chemical Co., White Springs, FL (Swift Creek)		1,029.6	514.8	18	37.491	16.352
Royster Co., Mulberry, FL	#1	774.6	387.3	18	18.618	11.998
	#2	600.0	300.0	24	7.114	11.475
USS Agri-Chemicals, Inc., Bartow, FL		632.5	316.2	18	10.920	9.571
USS Agri-Chemicals, Inc., Ft. Meade, FL		1,104.5	552.3	23	40.042	22.093
Nu-West Industries, Inc., Conda, ID		848.5	424.3	24	19.747	17.134
J.R. Simplot Co.,	#1	583.1	291.5	12	11.219	6.091
Pocatello, ID	#2	1,272.8	636.4	20	59.530	22.632
Bunker Hill Co., Kellogg, ID	#1	200.0	100.0	8	0.790	1.275
	#2	316.2	158.1	8	2.953	2.157
	#3	632.5	316.2	8	15.677	4.557

Table 13-B-1. Estimated dimensions and areas of phosphogypsum stacks (continued).

Facility/Location		Length, m[a]	Width, m[a]	Height, m	Top Area, ha[b]	Side Area, ha
Allied Chemical Co., E. St. Louis, IL		374.2	187.1	9	4.262	2.888
Beker Industries Corp., Marseilles, IL		600.0	300.0	9	13.432	4.816
Mobil Chemical Co., Depue, IL		894.4	447.2	13	30.141	10.389
Northern Petrochemical Co., Morris, IL		748.3	374.2	4	25.365	2.779
Olin Corp., Joliet, IL	#1	1,303.8	651.9	27	55.937	30.630
	#2	400.0	200.0	5	6.290	1.803
SECO, Inc., Streator, IL		447.2	223.6	18	3.921	6.407
U.S. Industrial Chemicals Co., Tuscola, IL		800.0	400.0	16	21.402	11.172
Agrico Chemical Company, Ft. Madison, IA	#1	632.5	316.2	30	6.163	14.585
	#2	632.5	316.2	9	15.168	5.093
	#3	692.8	346.4	5	20.971	3.191
Agrico Chemical Co., Donaldsonville, LA		2,016.0	1,008.0	12	168.365	35.538
Arcadian Corp., Geismar, LA	#1	871.8	435.9	20	23.748	15.025
	#2	529.2	264.6	12	5.917	8.246
	#3	469.0	234.5	12	3.996	7.141
	#4	424.3	212.1	6	5.541	3.527
Agrico Chemical Co., Hahnville, LA		424.3	212.1	4	6.614	2.433
Agrico Chemical Co., Uncle Sam, LA		2,383.3	1,191.6	20	179.837	104.967
Nu-South Industries, Inc., Pascagoula, MS		1,421.3	710.6	20	31.722	69.622
Farmers Chemical Co., Joplin, MO		748.3	374.2	15	18.709	9.795
W.R. Grace & Co., Joplin, MO	#1	447.2	223.6	10[d]	6.335	3.863
	#2	447.2	223.6	10[d]	6.335	3.863
Texasgulf Chemicals Co., Aurora, NC	#1	565.7	282.8	26	9.278	7.796
	#2	774.6	387.3	18	21.345	9.491
	#3	1,010.0	505.0	38	29.373	23.959
	#4	1,010.0	505.0	19	38.925	13.247
	#5	1,010.0	505.0	20	41.719	10.951
Amoco Oil Co., Texas City, TX	#1	529.2	264.6	11	9.199	5.063
	#2	200.0	100.0	3	1.492	0.535

Table 13-B-1. Estimated dimensions and areas of phosphogypsum stacks (continued).

Facility/Location		Length, m[a]	Width, m[a]	Height, m	Top Area, ha[b]	Side Area, ha
Kerley Agricultural Chemicals of Texas, Inc., Pasadena, TX		469.0	234.5	11	6.791	4.435
Mobil Mining & Minerals Div., Pasadena, TX	#1[c]	692.8	346.4	27	9.788	14.979
	#2	848.5	424.3	27	18.007	18.968
	#3	1,104.5	552.3	30	34.419	28.020
Phillips Chemical Co., Pasadena, TX		529.2	264.6	27	3.767	10.789
Chevron Chemical Co., Magna, UT		1,555.6	777.8	5	114.084	7.284
Chevron Chemical Co., Rock Springs, WY		1,907.9	953.9	10[d]	165.184	17.720

(a) Length and width of rectangular stack base calculated from base area assuming length is twice the width.
(b) ha - hectare = 10,000 square meters.
(c) Numbers 1, 2, 3, etc., refer to different stacks at a facility.
(d) Default value.

APPENDIX 13-C

Lifetime Fatal Cancer Risks and Committed Fatal Cancers Due to Radon-222 Emissions from Phosphogypsum Stacks

Lifetime fatal cancer risks and working-level exposures due to radon-222 for the maximum exposed individual are given in Table 13-C-1 for each phosphogypsum stack. These results were used to generate Table 13-10 in Section 13.3.1. Table 13-C-2 shows the estimated committed fatal cancers per year within 80 km of each individual stack. Table 13-12 in Section 13.3.2 is based on these results.

Table 13-C-1. Estimated lifetime fatal cancer risks to nearby individuals caused by radon-222 emissions from phosphogypsum stacks.

Facility/Location	Radon Concentration (pCi/l)	Maximum Exposure (WL)	Maximum Lifetime Fatal Cancer Risk to Individual	Distance[a] (meters)
Districhem Inc., Helena, AR	3.6E-3	1.2E-5	2E-5	1,400
Agrico Chemical Co., Bartow FL	1.6E-3	7.2E-6	1E-5	4,800
Royster Phosphate, Inc., Palmetto FL	1.8E-2	5.7E-5	8E-5	1,200
Brewster Phosphates, Bradley, FL	6.8E-3	2.2E-5	3E-5	1,200
C.F. Industries, Inc., Plant City, FL	1.5E-2	4.7E-5	6E-5	1,200
C.F. Industries, Inc., Bartow, FL	4.2E-3	1.5E-5	2E-5	2,600
Conserv, Inc., Nichols, FL #1[b]	2.3E-3	7.4E-6	1E-5	1,100
#2	2.9E-3	9.1E-6	1E-5	1,100
Estech, Inc., Bartow, FL	5.8E-4	2.2E-6	3E-6	3,000
Farmland Industries, Inc., Bartow, FL	8.4E-3	2.8E-5	4E-5	1,500
Gardinier, Inc., Tampa, FL	7.7E-3	2.6E-5	4E-5	1,600
Seminole Fert. Corp., Bartow, FL #1	8.2E-3	2.6E-5	4E-5	1,200
#2	1.6E-2	5.1E-5	7E-5	1.200
IMC Corporation, Mulberry, FL	4.1E-3	1.7E-5	2E-5	4,000
Occidental Chemical Co., #1	8.7E-4	3.3E-6	5E-6	2,800
White Springs, FL #2	7.4E-4	2.8E-6	4E-6	3,000
(Suwannee River)				
Occidental Chemical Co., White Springs, FL (Swift Creek)	9.2E-4	3.6E-6	5E-6	3,200
Royster Co., Mulberry, FL #1	3.7E-3	1.2E-5	2E-5	1,000
#2	2.5E-3	7.9E-6	1E-5	1,000
USS Agri-Chemicals, Inc., Bartow, FL	2.9E-3	9.0E-6	1E-5	900
USS Agri-Chemicals, Inc., Ft. Meade, FL	1.2E-2	3.6E-5	5E-5	1,000
Nu-West Industries, Inc., Conda, ID	1.3E-2	3.9E-5	5E-5	900
J.R. Simplot Co., #1	2.0E-3	6.5E-6	9E-6	1,200
Pocatello, ID #2	6.1E-3	2.1E-5	3E-5	2,000

(a) Distance from the center of the stack.
(b) Numbers 1, 2, 3, etc., refer to different stacks at a facility.

Table 13-C-1. Estimated lifetime fatal cancer risks to nearby individuals caused by radon-222 emissions from phosphogypsum stacks (continued).

Facility/Location		Radon Concentration (pCi/l)	Maximum Exposure (WL)	Maximum Lifetime Fatal Cancer Risk to Individual	Distance[a] (meters)
Bunker Hill Co., Kellogg, ID	#1[b]	1.2E-3	3.7E-6	5E-6	800[c]
	#2	2.6E-3	8.0E-6	1E-5	800[c]
	#3	8.5E-3	2.6E-5	4E-5	800[c]
Allied Chemical Co., E. St. Louis, IL		6.0E-3	1.8E-5	3E-5	800[c]
Beker Industries Corp., Marseilles, IL		1.1E-2	3.2E-5	4E-5	600
Mobil Chemical Co., Depue, IL		8.2E-3	2.6E-5	4E-5	1,100
Northern Petrochemical Co., Morris, IL		3.9E-3	1.2E-5	2E-5	1,200
Olin Corp., Joliet, IL	#1	2.0E-2	6.2E-5	9E-5	900
	#2	1.7E-3	5.1E-6	7E-6	900
SECO, Inc., Streator, IL		9.7E-3	3.0E-5	4E-5	1,000
U.S. Industrial Chemicals Co., Tuscola, IL		6.0E-3	1.8E-5	2E-5	700
Agrico Chemical Company, Ft. Madison, IA	#1	8.4E-4	3.0E-6	4E-6	2,100
	#2	4.7E-4	1.7E-6	2E-6	2,100
	#3	4.6E-4	1.6E-6	2E-6	2,100
Agrico Chemical Co., Donaldsonville, LA		4.8E-3	1.6E-5	2E-5	1,500
Arcadian Corp., Geismar, LA	#1	4.0E-3	1.3E-5	2E-5	1,200
	#2	1.8E-3	5.9E-6	8E-6	1,200
	#3	1.5E-3	4.7E-6	7E-6	1,200
	#4	8.5E-4	2.7E-6	4E-6	1,200
Agrico Chemical Co., Hahnville, LA		3.0E-4	1.0E-6	1E-6	1,800
Agrico Chemical Co., Uncle Sam, LA		1.5E-2	5.1E-5	7E-5	2,100
Nu-South Industries, Inc., Pascagoula, MS		1.1E-3	5.5E-6	7E-6	7,500
Farmers Chemical Co., Joplin, MO		6.6E-3	2.1E-5	3E-5	1,200

(a) Distance from the center of the stack.
(b) Numbers 1, 2, 3, etc., refer to different stacks at a facility.
(c) A default value of 800m was assumed due to the uncertainty of the locations of the nearest residences. Appropriate maps were not available for these locations.

Table 13-C-1. Estimated lifetime fatal cancer risks to nearby individuals caused by radon-222 emissions from phosphogypsum stacks (continued).

Facility/Location		Radon Concentration (pCi/l)	Maximum Exposure (WL)	Maximum Lifetime Fatal Cancer Risk to Individual	Distance[a] (meters)
W.R. Grace & Co., Joplin, MO	#1[b]	1.8E-3	5.8E-6	8E-6	1,500
	#2	1.8E-3	5.8E-6	8E-6	1,500
Texasgulf Chemicals Co.,	#1	2.5E-4	1.0E-6	1E-6	3,500
Aurora, NC	#2	3.4E-4	1.4E-6	2E-6	4,000
	#3	3.2E-4	1.3E-6	2E-6	3,700
	#4	3.4E-4	1.3E-6	2E-6	3,200
	#5	3.7E-4	1.4E-6	2E-6	2,900
Amoco Oil Co.,	#1	7.6E-3	2.6E-5	4E-5	1,800
Texas City, TX	#2	9.8E-4	3.3E-6	5E-6	1,800
Kerley Agricultural Chemicals of Texas, Inc., Pasadena, TX		1.3E-2	4.0E-5	6E-5	1,300
Mobil Mining & Minerals Div.,	#1	1.4E-2	4.9E-5	7E-5	2,300
Pasadena, TX	#2	1.9E-2	6.1E-5	8E-5	1,300
	#3	2.1E-2	6.5E-5	9E-5	1,000
Phillips Chemical Co., Pasadena, TX		7.0E-3	2.5E-5	4E-5	2,400
Chevron Chemical Co., Magna, UT		1.8E-4	8.6E-7	1E-6	5,800
Chevron Chemical Co., Rock Springs, WY		2.4E-4	1.0E-6	1E-6	4,200

(a) Distance from the center of the stack.
(b) Numbers 1, 2, 3, etc., refer to different stacks at a facility.

Table 13-C-2. Summary of committed fatal cancers per year within 80 km of phosphogypsum stacks.

Facility/Location		1980 Population within 80 km	Committed Fatal Cancers per Year (0-80 km)
Districhem Inc., Helena, AR		349,261	8E-4
Agrico Chemical Co., Bartow FL		1,717,059	2E-2
Royster Phosphate, Inc., Palmetto FL		2,059,168	2E-2
Brewster Phosphates, Bradley, FL		1,809,809	6E-3
C.F. Industries, Inc., Plant City, FL		2,153,710	3E-2
C.F. Industries, Inc., Bartow, FL		1,698,291	3E-2
Conserv, Inc., Nichols, FL	#1	2,162,868	6E-3
	#2	2,183,813	7E-3
Estech, Inc., Bartow, FL		1,585,674	2E-3
Farmland Industries, Inc., Bartow, FL		1,582,493	1E-2
Gardinier, Inc., Tampa, FL		2,189,940	5E-2
Seminole Fert. Corp. Bartow, FL	#1	1,548,237	9E-3
	#2	1,448,342	3E-2
IMC Corporation, Mulberry, FL		2,147,892	3E-2
Occidental Chemical Co.,	#1	214,674	8E-4
White Springs, FL	#2	217,985	8E-4
(Suwannee River)			
Occidental Chemical Co., White Springs, FL (Swift Creek)		228,859	1E-3
Royster Co., Mulberry, FL	#1	1,734,734	6E-3
	#2	1,780,345	4E-3
USS Agri-Chemicals, Inc., Bartow, FL		1,405,177	5E-3
USS Agri-Chemicals, Inc., Ft. Meade, FL		1,416,722	7E-3
Nu-West Industries, Inc., Conda, ID		97,600	3E-4
J.R. Simplot Co.,	#1	162,576	9E-4
Pocatello, ID	#2	162,576	3E-3
Bunker Hill Co., Kellogg, ID	#1	131,813	7E-5
	#2	131,813	8E-5
	#3	132,473	3E-4
Allied Chemical Co., E. St. Louis, IL		2,454,271	9E-3
Beker Industries Corp., Marseilles, IL		1,665,266	4E-3
Mobil Chemical Co., Depue, IL		675,690	3E-3
Northern Petrochemical Co., Morris, IL		6,100,385	1E-2
Olin Corp., Joliet, IL	#1	7,448,591	1E-1
	#2	7,458,031	9E-3
SECO, Inc., Streator, IL		801,552	2E-3
U.S. Industrial Chemicals Co., Tuscola, IL		640,239	2E-3
Agrico Chemical Company,	#1	335,158	9E-4
Ft. Madison, IA	#2	335,623	5E-4
	#3	335,334	5E-4
Agrico Chemical Co., Donaldsonville, LA		1,290,433	1E-2
Arcadian Corp., Geismar, LA	#1	1,022,410	4E-3
	#2	1,034,122	2E-3
	#3	1,019,591	1E-3
	#4	1,021,499	8E-4

Table 13-C-2. Summary of committed fatal cancers per year within 80 km of phosphogypsum stacks (continued).

Facility/Location		1980 Population within 80 km	Committed Fatal Cancers per Year (0-80 km)
Agrico Chemical Co., Hahnville, LA		1,783,951	9E-4
Agrico Chemical Co., Uncle Sam, LA		1,909,222	3E-2
Nu-South Industries, Inc., Pascagoula, MS		671,827	7E-3
Farmers Chemical Co., Joplin, MO		361,128	1E-3
W.R. Grace & Co., Joplin, MO	#1	358,231	4E-4
	#2	356,982	4E-4
Texasgulf Chemicals Co., Aurora, NC	#1	374,248	2E-4
	#2	372,327	4E-4
	#3	382,084	7E-4
	#4	382,559	6E-4
	#5	380,246	6E-4
Amoco Oil Co., Texas City, TX	#1	2,621,365	2E-2
	#2	2,620,216	2E-3
Kerley Agricultural Chemicals, Pasadena, TX		2,986,765	3E-2
Mobil Mining & Minerals Div., Pasadena, TX	#1	2,992,382	9E-2
	#2	2,999,952	1E-1
	#3	3,002,031	1E-1
Phillips Chemical Co., Pasadena, TX		2,985,632	5E-2
Chevron Chemical Co., Magna, UT		1,147,033	4E-3
Chevron Chemical Co., Rock Springs, WY		41,108	4E-4

APPENDIX 13-D

Frequency Distributions of Lifetime Fatal Cancers Caused by Radon-222 Emissions from Phosphogypsum Stacks in Selected Regions

Table 13-D-1. Estimated distribution of lifetime fatal cancer risk caused by radon-222 emissions from seven phosphogypsum stacks in Texas.[a]

Risk Interval	Number of Persons[b]	Deaths/y
1E-1 to 1E+0	0	0
1E-2 to 1E-1	0	0
1E-3 to 1E-2	0	0
1E-4 to 1E-3	0	0
1E-5 to 1E-4	350,000	8E-2
1E-6 to 1E-5	8,400,000	3E-1
< 1E-6	12,000,000	6E-2
Totals[c]	20,000,000	4E-1

(a) Phosphogypsum stacks included in this summary are: Amoco Oil Co., Texas City, TX (2); Kerley Agricultural Chemicals of Texas, Inc., Pasadena, TX (1); Mobil Mining and Minerals Div., Pasadena, TX (3); Phillips Chemical Co., Pasadena, TX (1).
(b) Populations are overestimated because they have not been corrected for overlap.
(c) Totals may not add due to independent rounding.

Table 13-D-2. Estimated distribution of lifetime fatal cancer risk caused by radon-222 emissions from 10 phosphogypsum stacks in the Bartow, FL, region.[a]

Risk Interval	Number of Persons[b]	Deaths/y
1E-1 to 1E+0	0	0
1E-2 to 1E-1	0	0
1E-3 to 1E-2	0	0
1E-4 to 1E-3	0	0
1E-5 to 1E-4	7,400	1E-3
1E-6 to 1E-5	2,600,000	6E-2
< 1E-6	15,000,000	7E-2
Totals[c]	18,000,000	1E-1

(a) Phosphogypsum stacks included in this summary are: USS Agri-Chemicals, Inc., Bartow, FL (1); Seminole Fertilizer Corp., Bartow, FL (2); Royster Co., Mulberry, FL (2); C.F. Industries, Inc., Bartow, FL (1); Farmland Industries, Inc., Bartow, FL (1); IMC Corp., Mulberry, FL (1); (1); Conserv, Inc., Nichols, FL (2).
(b) Populations are overestimated because they have not been corrected for overlap.
(c) Totals may not add due to independent rounding.

Table 13-D-3. Estimated distribution of lifetime fatal cancer risk caused by radon-222 emissions from six phosphogypsum stacks in Illinois.[a]

Risk Interval	Number of Persons[b]	Deaths/y
1E-1 to 1E+0	0	0
1E-2 to 1E-1	0	0
1E-3 to 1E-2	0	0
1E-4 to 1E-3	0	0
1E-5 to 1E-4	20,000	5E-3
1E-6 to 1E-5	2,200,000	6E-2
< 1E-6	22,000,000	8E-2
Totals[c]	24,000,000	1E-1

(a) Phosphogypsum stacks included in this summary are: Beker Industries Corp., Marseilles, IL (1); Mobil Chemical Co., Depue, IL (1); Northern Petrochemical Co., Morris, IL (1); Olin Corp., Joliet, IL (2); SECO, Inc., Streator, IL (1).
(b) Populations are overestimated because they have not been corrected for overlap.
(c) Totals may not add due to independent rounding.

Table 13-D-4. Estimated distribution of lifetime fatal cancer risk caused by radon-222 emissions from seven phosphogypsum stacks in Louisiana.[a]

Risk Interval	Number of Persons[b]	Deaths/y
1E-1 to 1E+0	0	0
1E-2 to 1E-1	0	0
1E-3 to 1E-2	0	0
1E-4 to 1E-3	0	0
1E-5 to 1E-4	10,000	3E-3
1E-6 to 1E-5	740,000	2E-2
< 1E-6	8,200,000	3E-2
Totals[c]	9,000,000	5E-2

(a) Phosphogypsum stacks included in this summary are: Arcadian Corp., Geismar, LA (4); Agrico Chemical Co., Donaldsonville, LA (1); Agrico Chemical Co., Hahnville, LA (1); Agrico Chemical Co., Uncle Sam, LA (1).
(b) Populations are overestimated because they have not been corrected for overlap.
(c) Totals may not add due to independent rounding.

Table 13-D-5. Estimated distribution of lifetime fatal cancer risk caused by radon-222 emissions from three phosphogypsum stacks in Idaho.[a]

Risk Interval	Number of Persons[b]	Deaths/y
1E-1 to 1E+0	0	0
1E-2 to 1E-1	0	0
1E-3 to 1E-2	0	0
1E-4 to 1E-3	0	0
1E-5 to 1E-4	2,200	4E-4
1E-6 to 1E-5	69,000	2E-3
< 1E-6	350,000	2E-3
Totals[c]	420,000	4E-3

(a) Phosphogypsum stacks included in this summary are: Nu-West Industries, Inc., Conda, ID (1); J.R. Simplot Co., Pocatello, ID (2).
(b) Populations are overestimated because they have not been corrected for overlap.
(c) Totals may not add due to independent rounding.

APPENDIX 13-E

Calculational Methods for Estimating Costs of Reducing Radon from Phosphogypsum Stacks

13-E.1 Stack Characteristics

Within a geographic group (see Section 13.4.2), the mean base area and mean plant capacity were used to estimate the ultimate height of the operating stacks at closure. See Section E.2 below for the method used to estimate the ultimate height.

For inactive stacks, the mean actual height in each geographic group was used, rather than the ultimate height. Idle stacks were put in the inactive stack category. Note that the estimated life of the active stacks (based upon the time required to reach the ultimate height) can be quite long. Some of the calculated ultimate heights may be too large, thus giving rise to the long lives (up to 64 years). However, this should not have a significant effect upon the cost and effectiveness results, because if a stack were to be closed before reaching this height, a new stack would have to be started. The combined emissions from both stacks would be about the same as those from the single large stack.

The mean top and side areas in each geographic group were used to compute the total radon emissions of the mean stack. These were then divided by the total surface area of the stack to get the average flux and then multiplied by the number of stacks in the group to get the total emissions. The average flux and the average value of b were used to estimate the thickness of the earth cover required to reduce the average flux to 6 or 2 $pCi/m^2/s$. Because the average radon flux from gypsum stacks is always less than 20 $pCi/m^2/s$, no mitigation is necessary to reach that level.

13-E.2 Maximum Stack Height

The maximum height of a gypsum stack is assumed to be determined by the minimum area of its top. Two factors determine the minimum area of the top of a gypsum stack. The first is the amount of gypsum that must be accommodated during one stack maintenance cycle, and the second is the minimum pond size for collecting the gypsum.

First, the minimum size based on a 20-day maintenance cycle will be examined (Ca88). Given a production rate of P MT of P_2O_5 per year, gypsum is produced at a rate of 5P MT per year or 5Px20/365 = 0.274P MT per 20-day cycle. Equipment considerations limit the amount the stack can be raised during a cycle to about four feet (1.2 meters).

Raising the entire stack 1.2 meters thus leads to a top area of

$$A = 0.274P(1/1.2)(1/0.72) = 0.32P\ m^2 \qquad (1)$$

where 0.72 is the density of freshly added gypsum (45 lb/ft^3).

The other factor affecting the minimum size is the adequacy of the pond to collect a substantial fraction of the gypsum.

At steady state, the mass of gypsum per unit time entering the pond must be equal to the mass per unit time leaving plus the mass per unit time that settles out. Thus, assuming the pond is perfectly mixed,

$$qC_i = (q + vA)C \tag{2}$$

where q is the volumetric flow rate of water into and out of the pond, C_i the concentration of gypsum in the water entering the pond, C the concentration in the pond, v the settling velocity, and A the settling area of the pond.

Defining $R = C/C_i$,

$$A = q(1-R)/(vR) \tag{3}$$

The incoming concentration is about 0.2 kg of gypsum per kg of mixture, or 0.25 kg of gypsum per kg of water. Given a production rate P (MT/yr) of phosphoric acid, the flow rate of the water is

$$q = 5\text{x}10^3 P/3.15\text{x}10^7 \text{ kg gyp/s x } 1/.25 \text{ kg } H_2O\text{/kg gyp x}$$

$$1/1000 \text{ m}^3\text{/kg } H_2O$$

$$= 6.35\text{x}10^{-7} P \text{ m}^3\text{/s} \tag{4}$$

The settling velocity of the gypsum particles is not known, but an equivalent settling velocity can be estimated by a back-calculation using a suggested area and efficiency (Ca88). Cameron suggests 30 acres (12 ha) to achieve a removal efficiency of 0.9999 for a plant producing 1.7 million short tons (1.5 million MT) of phosphoric acid per year. Using equation (2) with $R = 0.0001$, $A = 12\text{x}10^4 \text{ m}^2$, and $q = 6.35\text{x}10^{-7} \text{ x}1.5\text{x}10^6 = 0.95 \text{ m}^3\text{/s}$, v can be solved to obtain $v = 0.079$ m/s.

Thus,

$$A = 6.35\text{x}10^{-7} P \text{ m}^3\text{/s } (1-0.0001)/(0.079 \text{ m/s x } 0.0001)$$

$$= 0.08P \text{ m}^2 \tag{5}$$

Because there must always be at least two settling ponds, the area must be twice this, or,

$$A = 0.16P \text{ m}^2 \tag{6}$$

with P in MT/year.

Because the coefficient for P in equation (6) is less than that in equation (1), equation (1) should be used.

13-E.3 Estimate of Risk

The risks associated with the various radon emission rates in Section 13.4 were estimated by scaling the total risk of all stacks in each group from Table 13-C-2 by the ratio of the total emissions for each group in Table 13-18 to the total of the emissions from Table 13-7 for all the stacks within a group. For example, from Table 13-E-1, 0.60 x (4700/3500) = 0.80, which is rounded to 0.8 in the "No Action" column for Florida, Texas, and Arkansas in Table 13-20.

Table 13-E-1. Values used to scale risk.

Group	Emissions From Table 13-7 (Ci/y)	Emissions From Table 13-18 (Ci/y)			Risk from Table 13-C-2
		Avg. Flux	Flux=6	Flux=2	
FL, TX, AK	3500	4700	3200	1100	0.60
IL, IA, MO	750	880	670	220	0.16
LA, MS	1400	1800	1200	420	0.056
NC	90	260	260	190	0.005
ID, UT, WY	680	1700	900	300	0.009

13-E.4 Calculation of Costs of Covering a Gypsum Stack

The complete basis for the costs is given in Appendix B, "Generic Unit Costs for Earth-Cover-Based Radon-222 Control Techniques," which for the most part uses data from Me87a and Me87b. The following is a summary of the unit costs and the general method used.

The cost of earth was taken to be $2.62 per cubic meter. Hauling (10-mile round trip) costs $11.64 per cubic meter. Placing, grading, and compacting cost $5.52 per cubic meter. This cost for placing, grading, and compacting tends to be on the higher end of the Me87a data to account for working on a 1:3 slope. It was not adjusted here for the relatively few stacks that have steeper (North Carolina) or gentler (Louisiana and Mississippi) slopes. Seeding costs were taken to be $0.54 per square meter. Where seeding may not be practical (Idaho, Utah, and Wyoming), it was assumed that the top was covered with 0.5 meters of gravel ($9.88 per cubic meter) and the sides with 0.5 meters of riprap ($30.50 per cubic meter). Mobilization costs (the costs of gathering together the work force and equipment) were not included.

The cost of the stack drain system was estimated by assuming that there are peripheral drains every 10 meters of height that run completely around the stack. The bottom peripheral drain is not counted as this is a normal part of every stack, whether it

is covered or not. Downspouts were assumed to be located every 30 meters around the stack and to connect one elevation of peripheral drains to the next. The cost was determined by multiplying the total length of the peripheral drains and downspouts by $24, the cost of 1 meter of 10-inch pipe.

A drain system may not be needed if the inner layer of earth cover is sufficiently permeable to act as a drain (Be88b). Because increased permeability acts to reduce the radon mitigation effectiveness, more earth would be required if an inner layer of more permeable earth were used in conjunction with an outer layer of less permeable earth. Thus, if this technique were used, the cost of earth would be higher, but there would be no cost for the drain system. It is assumed that the increase cancels out the reduction.

Also included is a synthetic cover for the top at an installed cost of $10.76 per square meter times the area of the top of the stack. While not required, this is being put on the Gardinier stack in Florida to reduce water seepage through the stack. The annual maintenance costs for the cover and drain system were estimated using the Appendix B costs per unit area ($0.10 and $0.14 per square meter for the cover and drain system, respectively). These unit costs were multiplied by 1.15 to account for overhead, profit, etc. (See Appendix B). A breakdown of the costs of covering each of the active and inactive stacks within each geographical group are given in Table 13-E-2.

13-E.5 Effectiveness of Earth Cover

The ratio of the radon flux ($pCi/m^2/s$) from a covered surface to that from an uncovered surface is given by:

$$R = \exp(-bx) \tag{7}$$

where R is the ratio, b is a coefficient, and x is the cover thickness (NRC84).

The coefficient b is a function of the moisture content of the soil. This, in turn is estimated empirically from the bulk density of the soil, the true density of the soil particles, the rainfall rate, the lake evaporation rate, and the fraction of the soil that consists of particles that will pass through a 200-mesh screen.

Table 13-E-2. Cost breakdown.

Component	Cost, Millions of 1987 Dollars Flux=6	Cost, Millions of 1987 Dollars Flux=2	Cost, Millions of 1987 Dollars Flux=6	Cost, Millions of 1987 Dollars Flux=2
Florida, Texas, and Arkansas				
	Active Stacks, N=14		Inactive Stacks, N=11	
Cost of Earth	0.9	2.4	0.3	0.8
Hauling	3.8	11.0	1.5	3.6
Place, Grade, Compact	1.8	5.1	0.7	1.7
Seeding	0.6	0.6	0.2	0.2
Drain System	1.0	1.0	0.1	0.1
Synthetic Cover	1.5	1.5	1.5	1.5
Total	9.6	21.6	4.3	7.9
Added costs of cover and drain maintenance - 0.3/year (active) 0.06/year (inactive)				
Illinois, Iowa, and Missouri				
	Active Stacks, N=2		Inactive Stacks, N=12	
Cost of Earth	0.6	2.2	0.2	0.5
Hauling	2.6	9.6	0.7	2.4
Place, Grade, Compact	1.3	4.6	0.3	1.1
Seeding	0.4	0.4	0.1	0.1
Drain System	1.3	1.1	0.1	0.1
Synthetic Cover	0.4	0.4	1.5	1.5
Total	6.6	18.3	2.9	5.7
Added costs of cover and drain maintenance - 0.2/year (active) 0.05/year (inactive)				
Louisiana and Mississippi				
	Active Stacks, N=4		Inactive Stacks, N=3	
Cost of Earth	1.4	3.0	0.2	0.4
Hauling	6.1	13.0	0.8	1.7
Place, Grade, Compact	2.9	6.2	0.4	0.8
Seeding	1.0	1.0	0.1	0.1
Drain System	0.8	0.8	0.1	0.1
Synthetic Cover	1.6	1.6	1.4	1.4
Total	13.8	25.6	3.0	4.5
Added costs of cover and drain maintenance - 0.5/year (active) 0.06/year (inactive)				

Table 13-E-2. Cost breakdown (continued).

Component	Cost, Millions of 1987 Dollars Flux=6	Cost, Millions of 1987 Dollars Flux=2	Cost, Millions of 1987 Dollars Flux=6	Cost, Millions of 1987 Dollars Flux=2
North Carolina				
	Active Stacks, N=4		Inactive Stacks, N=4	
Cost of Earth	0	0.4	0	0
Hauling	0	1.9	0	0
Place, Grade, Compact	0	0.9	0	0
Seeding	0	0.3	0	0
Drain System	0	0.6	0	0
Synthetic Cover	0	1.9	0	0
Total	0	6.0	0	0
Added costs of cover and drain maintenance - 0.2/year (active) 0.0/year (inactive)				
Idaho, Utah, and Wyoming				
	Active Stacks, N=3		Inactive Stacks, N=5	
Cost of Earth	3.0	6.9	0.3	1.5
Hauling	13.0	31.0	1.3	6.7
Place, Grade, Compact	6.2	15.0	0.6	3.2
Seeding	15.0	15.0	2.1	2.1
Drain System	2.3	2.3	0.1	0.1
Synthetic Cover	1.0	1.0	3.6	3.6
Total	40.5	71.2	8.0	17.2
Added costs of cover and drain maintenance - 0.3/year (active) 0.09/year (inactive)				

The coefficient, b (cm/s), is given by:

$$b = (L/D)^{1/2} \tag{8}$$

where L is the decay constant for radon (2.1×10^{-6} sec^{-1}), and D the diffusion coefficient (cm^2/s), given by the empirical equation,

$$D = 0.07 \exp[-4(m - mp^2 + m^5)] \tag{9}$$

where p is the porosity (void fraction), p = 1 - R/G, R being the bulk density and G the theoretical density. The parameter, m, is given by

$$m = 0.01M / (1/R - 1/G) \tag{10}$$

and M by

$$M = 3.1P^{1/2} - 0.03E + 3.9f_{cm} - 1.0 \tag{11}$$

where P is the precipitation rate, in/yr; E the lake evaporation rate, in/yr; and f_{cm} the fraction of soil passing a 200-mesh screen.

The true density of most soil is about 2.6 gm/cc. The bulk density depends upon the amount of compaction when the cover is installed; however, in order for cover to grow on the soil, the bulk density should be in the range of 1.3 to 1.5 gm/cc (Sp88). Below this range the soil is too loose, and above this range it is too dense. It is assumed that the cover is compacted to a bulk density of 1.4 gm/cc.

Sandy soils have a lower value of f_{cm} than soils with a high clay content. Because Florida soils tend to be quite sandy, 0.1 was used for Florida soils and 0.2 for soils in other parts of the country. The rainfall and lake evaporation rates are from the National Oceanic and Atmospheric Administration publications (NOA82a and NOA82b).

13-E.6 References

Be88b Beal, S.K. and Thompson, S., "Preliminary Assessment of Cost and Effectiveness of Mitigating Radon Emissions From Phosphogypsum Stacks." Prepared by S. Cohen and Associates, Inc. for the U.S. EPA, Contract No. 68-02-4375, Work Assignment No. 1-20, McLean, VA, June 1988.

Ca88 Cameron, J.E., "Land Planning for Phosphogypsum Stacks in Central Florida," draft of a paper intended for publication in 1988.

Me87a Means, R.S., Inc., Boston, MA, Assemblies Cost Data, 12th Ed., 1987.

Me87b Means, R.S., Inc., Boston, MA, Facilities Cost Data, 12th Ed., 1987.

NOA82a National Oceanic and Atmospheric Administration, "Evaporation Atlas for the Contiguous 48 United States," NOAA Technical Report NWS 33, U.S. Department of Commerce, National Oceanic and Atmospheric Administration, National Weather Service, Washington, DC, June 1982.

NOA82b National Oceanic and Atmospheric Administration, "Monthly Normals of Temperature, Precipitation, and Heating and Cooling Degree Days 1951- 1980," Climatography of the United States No. 81 (by state), U.S. Department of Commerce, National Oceanic and Atmospheric Administration, Environmental Data and Information Service, National Climatic Center, Asheville, NC, September 1982. Note: there is one publication of this number for each state.

NRC84 Rogers, V.C., Nielson, K.K., and Kalkwarf, D.R., "Radon Attenuation Handbook for Uranium Mill Tailings Cover Design," NUREG/CR-3533, prepared for the U.S. Nuclear Regulatory Commission, Washington, DC, April 1984.

Sp88 Spivey, L., U.S. Department of Agriculture, personal communication with SC&A personnel, August 1988.

*U.S. Government Printing Office: 1990-718-808