United States
Environmental Protection
Agency

EPA/540/MR-94/527
November 1994

EPA

540MR94527

SITE
SUPERFUND INNOVATIVE
TECHNOLOGY EVALUATION

Demonstration Bulletin

540MR94527

Radio Frequency Heating

IIT Research Institute

Technology Description: Radio frequency heating (RFH) is a process that uses electromagnetic energy generated by radio waves to heat soil in situ, thereby potentially enhancing the performance of standard soil vapor extraction (SVE) technologies. An RFH system developed by the IIT Research Institute (IITRI) was evaluated under the Superfund Innovative Technology Evaluation (SITE) Program at Kelly Air Force Base (AFB) in San Antonio, TX. This demonstration was performed in conjunction with a technology evaluation being performed by the U.S. Air Force (USAF) at Site S-1, a former waste disposal site containing a heterogeneous mix of clayey soils and gravel.

Figure 1 is a schematic diagram of IITRI's RFH system. A 40-kW radio frequency (RF) transmitter was used as the RF energy source for the system. The operating frequency and other operational parameters were selected based on soil dielectric properties.

The four exciter electrodes were installed in a row in the center of the treatment zone. Two rows of eight ground electrodes each were installed parallel to and on either side of the exciter electrode row. Above-ground components connected to the ground electrodes completed the RF containment system. A groundwater dewatering system was installed to lower the water table to below the bottom of the design treatment zone.

The outer casings of most of the ground electrodes were perforated on the sides facing the treatment zone to permit the collection of vapors from the soil. The perforated ground electrodes were connected to a manifold that led to the vapor treatment system. Two perforated vapor extraction pipes were also installed parallel to the ground surface to prevent buildup of vapors below the vapor barrier. A vapor barrier covered the surface of the soil in and around the treatment zone to prevent heat loss, contaminant migration, and air infiltration.

The vapor extraction system was operated for a period of 8½ weeks during which soil heating occurred and for an additional 17 days during which the treated soil was allowed to cool. Soil cool-down was allowed to continue for approximately another 8 weeks before final soil sampling. Vapors were channeled through a vapor collection system to a vapor treatment system. Vapors that condensed in the vapor collection and treatment systems were collected, and then transferred to a Kelly AFB facility for further treatment. Uncondensed vapors were burned in a natural gas flare. The vapor treatment system was site- and contaminant-specific and was not evaluated as part of the RFH system.

Waste Applicability: RFH is a potential enhancement for in situ SVE systems. According to IITRI, their RFH technology is not currently ready for commercialization. IITRI is continuing

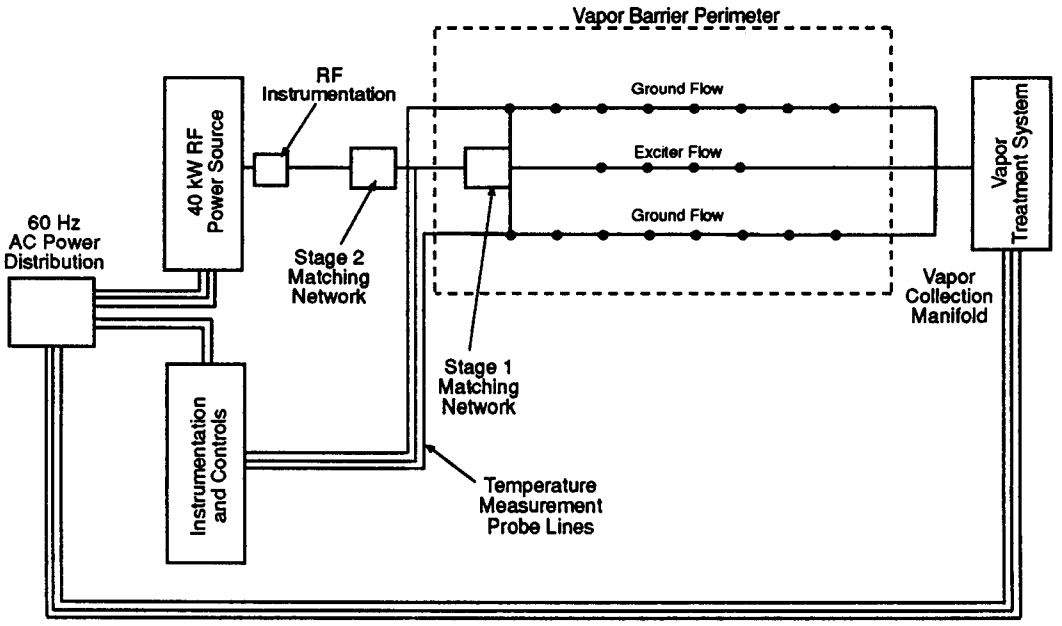

Figure 1. Schematic diagram of IITRI's RFH system.

Printed on Recycled Paper

technical development of a system that they believe will be commercially available in the future. RFH is designed to speed the removal of volatile organics and to make it possible to remove semivolatile organics that would not normally be removed by standard SVE technologies. Inorganic, metal, and other nonvolatile contaminants would not normally be treated by SVE or RFH technologies. This technology is applicable only to wastes located above the water table, unless saturated soils can be effectively dewatered.

Demonstration Results: IITRI's design treatment zone for the demonstration was a plot of soil 10ft wide, 14.1ft long, and 23.3ft deep. The treatment zone was part of an intermediate storage area for wastes destined for off-base reclamation, and the soil was contaminated with mixed solvents, carbon cleaning compounds, and petroleum oils and lubricants. Temperatures within and outside the treatment zone were monitored at various depths throughout the treatment period. Serious operational difficulties, as exemplified by the melting of copper electrodes, caused inconsistent and inefficient heating of the treatment zone. Maximum temperatures within the treatment zone ranged from more than 1,000°C near the exciter electrodes to less than 50°C near the bottom corners of the treatment zone. The design treatment zone contained approximately 3,280ft^3 of soil. The "heated zone" is the area in which a time-weighted average temperature of at least 150°C was maintained for at least 2 weeks. The heated zone contains an estimated 1,270ft^3 of soil. The heated zone was evaluated independently of the design treatment zone.

Changes in soil contaminant concentrations were evaluated using matched pairs of pre- and post-treatment samples, which were collected as close to one another as possible. Within the design treatment zone, 28 matched pairs of samples were collected; 9 matched pairs were collected outside the treatment zone. Both pre- and post-treatment contaminant concentrations varied considerably, making it difficult to determine statistically significant removals.

Final statistical analyses have not yet been completed for either the heated zone or the design treatment zone. Preliminary statistical analyses for the design treatment zone indicate that total recoverable petroleum hydrocarbons (TRPH), pyrene, and bis(2-ethylhexyl)phthalate exhibited statistically significant decreases (at the 80% confidence interval). Chlorobenzene concentrations appear to have increased during treatment, potentially due to volatilization of chlorobenzene present in the groundwater. Significant concentrations of 2-hexanone, 4-methyl-2-pentanone, acetone, and methyl ethyl ketone were found in the post-treatment soils, although virtually no ketones were found before treatment. Soil temperatures, sometimes as high as 1,000° C, may have caused partial oxidation of petroleum hydrocarbons. Alternatively, these ketones may have been volatilized from groundwater. At this time insufficient data are available to determine the source of ketones found in post-treatment soils.

An Innovative Technology Evaluation Report and a Technology Evaluation Report describing the complete demonstration will be available by summer 1995.

For Further Information:

EPA Project Manager:
Laurel Staley
U.S. Environmental Protection Agency
Risk Reduction Engineering Laboratory
26 West Martin Luther King Drive
Cincinnati, OH 45268
(513) 569-7863

Kelly AFB Project Engineer:
Ms. Victoria Wark
SA-ALC/EMRO
305 Tinker Drive, Suite 2, Building 305
Kelly AFB, TX 78241-5915
(210) 925-1812

Halliburton NUS Project Manager:
Mr. Clifton Blanchard
Halliburton NUS
800 Oak Ridge Turnpike, Suite A600
Oak Ridge, TN 37830
(615) 483-9900

Process Vendor:
Mr. Harsh Dev
IIT Research Institute
10 West 35th Street
Chicago, IL 60616
(312) 567-4257

USAF RF Program Manager:
Paul F. Carpenter
AL/EQW-OL
139 Barnes Drive, Suite 2
Tyndall AFB, FL 32403
(904) 283-6187

United States
Environmental Protection Agency
Center for Environmental Research Information
Cincinnati, OH 45268

Official Business
Penalty for Private Use
$300

EPA/540/MR-94/527

BULK RATE
POSTAGE & FEES PAID
EPA
PERMIT No. G-35