Technology Transfer EPA/625/R-93/003b

SUBSURFACE CHARACTERIZATION AND MONITORING TECHNIQUES:

A DESK REFERENCE GUIDE

Volume II: The Vadose Zone, Field Screening and Analytical Methods
Appendices C and D

May 1993

Prepared by:

Eastern Research Group
4664 N. Robs Lane
Bloomington, IN, 47408

Prepared for:

Center for Environmental Research Information
U.S. Environmental Protection Agency
26 West Martin Luther King Drive
Cincinnati, OH 45268

Environmental Monitoring Systems Laboratory
U.S. Environmental Protection Agency
Las Vegas, NV 89193-3478

Printed on Recycled Paper

CONTENTS

VOLUME I: SOLIDS AND GROUND WATER

Introduction

Use of This Guide
Guide Organization and Format
Sources of Additional Information
References

1. Remote Sensing and Surface Geophysical Methods

1.1 Airborne Remote Sensing and Geophysics
1.1.1 Visible and Near Infrared
1.1.2 Photographic Ultraviolet
1.1.3 Thermal Infrared
1.1.4 Active Microwave (Radar)
1.1.5 Airborne Electromagnetics (AEM)
1.1.6 Aeromagnetics
1.2 Surface Electrical Methods
1.2.1 Electrical Resistivity (ER)
1.2.2 Self-Potential
1.2.3 Induced Polarization (IP)
1.3 Surface Electromagnetic Methods
1.3.1 Electromagnetic Induction (EMI)
1.3.2 Time Domain Electromagnetics
1.3.3 Metal Detectors
1.3.4 Very-Low Frequency Electromagnetics (VLF)
1.3.5 Magnetotellurics (MT)
1.4 Surface Seismic and Acoustic Methods
1.4.1 Seismic Refraction
1.4.2 Seismic Reflection
1.4.3 Continuous Seismic Profiling (CSP)
1.4.4 Seismic Shear and Surface Waves
1.4.5 Acoustic Emission Monitoring
1.4.6 Sonar
1.4.7 Pulse-Echo Ultrasonics
1.5 Other Surface Geophysical Methods
1.5.1 Ground-Penetrating Radar (GPR)
1.5.2 Magnetometry
1.5.3 Gravimetrics
1.5.4 Radiation Detection
1.6 Near-Surface Geothermometry
1.6.1 Soil Temperature
1.6.2 Shallow Geothermal Ground-Water Detection
1.6.3 Other Thermal Properties

2. Drilling and Solids Sampling Methods

2.1 Drilling Methods
2.1.1 Hollow-Stem Auger
2.1.2 Direct Air Rotary with Rotary Bit/Downhole Hammer
2.1.3 Direct Mud Rotary
2.1.4 Cable Tool
2.1.5 Casing Advancement: Rotary Drill-Through Methods (Drill-Through Casing Driver and Dual Rotary Advancement)
2.1.6 Casing Advancement: Reverse Circulation (Rotary, Percussion Hammer, and Hydraulic Percussion)
2.1.7 Casing Advancement: Downhole Casing Advancers (ODEX, TUBEX)
2.1.8 Jetting Methods
2.1.9 Solid Flight and Bucket Augers

2.1.10 Rotary Diamond Drilling
2.1.11 Directional Drilling
2.1.12 Sonic Drilling

2.2 Drive Methods
2.2.1 Driven Wells
2.2.2 Cone Penetration
2.3 Hand-Held Soil Sampling Devices
2.3.1 Scoops, Spoons, and Shovels
2.3.2 Augers
2.3.3 Tubes
2.4 Power-Driven Soil Sampling Devices
2.4.1 Split and Solid Barrel
2.4.2 Rotating Core
2.4.3 Thin-Wall Open Tube
2.4.4 Thin-Wall Piston
2.4.5 Specialized Thin-Wall
2.5 Field Description of Soil Physical Properties
2.5.1 Texture
2.5.2 Color
2.5.3 Other Features

3. Geophysical Logging of Boreholes

3.1 Electrical Borehole Logging
3.1.1 SP Logs
3.1.2 Single-Point Resistance
3.1.3 Fluid Conductivity
3.1.4 Resistivity Logs
3.1.5 Dipmeter
3.1.6 Other Electrical Methods
3.2 Electromagnetic Borehole Logging
3.2.1 Induction
3.2.2 Borehole Radar
3.2.3 Dielectric
3.2.4 Other Electromagnetic Methods
3.3 Nuclear Borehole Logging
3.3.1 Natural Gamma
3.3.2 Gamma-Gamma
3.3.3 Neutron
3.3.4 Gamma-Spectrometry
3.3.5 Neutron Activation
3.3.6 Neutron Lifetime
3.4 Acoustic and Seismic Logging
3.4.1 Acoustic-Velocity (Sonic)
3.4.2 Acoustic-Waveform
3.4.3 Acoustic Televiewer
3.4.4 Surface-Borehole Seismic Methods
3.4.5 Geophysical Diffraction Tomography
3.4.6 Cross-Borehole Seismic Methods
3.5 Miscellaneous Borehole Logging
3.5.1 Caliper
3.5.2 Temperature Log
3.5.3 Mechanical Flowmeter
3.5.4 Thermal Flowmeter
3.5.5 Electromagnetic (EM) Flowmeter
3.5.6 Single-Borehole Tracer Methods
3.5.7 Television/Photography
3.5.8 Magnetic and Gravity Logs
3.6 Well Construction Logs
3.6.1 Casing Logging
3.6.2 Cement and Gravel Pack Logs

3.6.3 Borehole Deviation

4. Aquifer Test Methods

4.1 Ground-Water Level/Pressure Measurement
4.1.1 Steel Tape
4.1.2 Electric Probe
4.1.3 Air line
4.1.4 Pressure Transducers
4.1.5 Audible Methods
4.1.6 Ultrasonic
4.1.7 Float Methods
4.1.8 Electromechanical
4.1.9 Artesian Aquifer Measurement
4.1.10 In Situ Piezometers
4.2 Hydraulic Conductivity (Shallow Water Table)
4.2.1 Auger Hole Method
4.2.2 Piezometer Method
4.2.3 Multiple-Hole Methods
4.3 Well Test Methods
4.3.1 Slug Tests
4.3.2 Pumping Tests
4.3.3 Packer Testing
4.4 Ground-Water Tracers
4.4.1 Ions
4.4.2 Dyes
4.4.3 Gases
4.4.4 Stable Isotopes
4.4.5 Radioactive Isotopes
4.4.6 Water Temperature
4.4.7 Particulates
4.5 Other Aquifer Characterization Methods
4.5.1 Unconfined Ground-Water Balance
4.5.2 Moisture Profiles for Specific Yield

5. Ground-Water Sampling Methods

5.1 Portable Positive Displacement Ground-Water Samplers
5.1.1 Bladder Pump
5.1.2 Gear Pump
5.1.3 Submersible Helical-Rotor Pump
5.1.4 Gas-Drive (Displacement) Pumps
5.1.5 Gas-Drive Piston Pump
5.1.6 Mechanical Piston Pumps
5.2 Other Portable Ground-Water Sampling Pumps
5.2.1 Suction-Lift Pumps
5.2.2 Submersible Centrifugal Pumps
5.2.3 Inertial-Lift Pumps
5.2.4 Gas-Lift Pumps
5.2.5 Jet Pumps
5.2.6 Packer Pumps
5.3 Portable Grab Ground-Water Samplers
5.3.1 Bailers
5.3.2 Pneumatic Depth-Specific Samplers
5.3.3 Mechanical Depth-Specific Samplers
5.4 Sampling Installations for Portable Samplers
5.4.1 Single-Riser/Limited Interval Wells
5.4.2 Single-Riser/Long-Screened Wells
5.4.3 Nested Wells/Single Borehole
5.4.4 Nested Wells/Multiple Boreholes
5.5 Portable In Situ Ground-Water Samplers/Sensors
5.5.1 Hydropunch®

5.5.2 Other Cone Penetrometer Samplers
5.5.3 Other Driven Samplers
5.5.4 Dissolved Oxygen, Eh, and pH Probes
5.5.5 Ion-Selective Electrodes
5.5.6 Fiber-Optic Chemical Sensors (FOCS)
5.6 Fixed In Situ Ground-Water Samplers
5.6.1 Multilevel Capsule Samplers
5.6.2 Multiple-Port Casings
5.7 Destructive Ground-Water Sampling Methods
5.7.1 Coring and Extraction
5.7.2 Temporary Installations

Appendix A. Design and Construction of Monitoring Wells
A.1 Well Casing Materials
A.2 Well Screen Types and Materials
A.3 Filter Pack
A.4 Grouts and Seals
A.5 Well Development
A.6 Well Maintenance and Rehabilitation
A.7 Well Abandonment

Appendix B. General Ground-Water Sampling Procedures
B.1 Quality Assurance/Quality Control
B.2 Well Purging
B.3 Sample Handling and Preservation
B.4 Decontamination

VOLUME II: THE VADOSE ZONE, FIELD SCREENING, AND ANALYTICAL METHODS

6. Vadose Zone Hydrologic Properties (I): Water State

6.1 Vadose Zone Soil Water Potential
6.1.1 Porous Cup Tensiometers
6.1.2 Thermocouple Psychrometers
6.1.3 Electrical Resistance Sensors
6.1.4 Electrothermal Methods
6.1.5 Osmotic Tensiometers
6.1.6 Filter-Paper Method
6.1.7 Water Activity Meter
6.2 Vadose Zone Moisture Content
6.2.1 Gravimetric Methods
6.2.2 Nuclear Methods
6.2.3 Dielectric Sensors
6.2.4 Time Domain Reflectometry
6.2.5 Nuclear Magnetic Resonance (NMR)
6.2.6 Electro-Optical Sensors
6.2.7 Computer Assisted Tomography (CAT)
6.3 Other Soil Hydrologic Properties
6.3.1 Soil Moisture-Potential-Conductivity Relationships
6.3.2 Water Sorptivity and Diffusivity
6.3.3 Available Water Capacity

7. Vadose Zone Hydrologic Properties (II): Infiltration, Conductivity, and Flux

7.1 Infiltration
7.1.1 Impoundment Methods
7.1.2 Land Surface Methods
7.1.3 Watershed Methods
7.1.4 Infiltration Equations

7.2 Unsaturated Hydraulic Conductivity
7.2.1 Instantaneous Profile Method
7.2.2 Draining Profile Methods
7.2.3 Tension Infiltrometers
7.2.4 Crust-Imposed Steady Flux
7.2.5 Sprinkler/Dripper Methods
7.2.6 Entrapped Air Method
7.2.7 Parameter Identification
7.2.8 Physical/Empirical Equations and Relationships
7.3 Saturated Hydraulic Conductivity (Shallow)
7.3.1 Cylinder Infiltrometers
7.3.2 Constant-Head Borehole Infiltration
7.3.3 Guelph Permeameter
7.3.4 Air-Entry Permeameter
7.3.5 Double Tube Method
7.3.6 Cylinder Permeameter
7.3.7 Infiltration Gradient Method
7.3.8 In Situ Monoliths
7.3.9 Boutwell Method
7.3.10 Velocity Permeameter
7.3.11 Percolation Test
7.4 Saturated Hydraulic Conductivity (Deep)
7.4.1 USBR Single-Well Methods
7.4.2 USBR Multiple-Well Method
7.4.3 Stephens-Neuman Single-Well Method
7.4.4 Air Permeability Method
7.5 Water Flux (Unsaturated Zone)
7.5.1 Water Budget Methods
7.5.2 Soil Moisture/Matric Potential Methods
7.5.3 Tracers
7.5.4 Soil-Water Flux Meters
7.5.5 Velocity Estimation
7.5.6 Physical and Empirical Equations

8. Vadose Zone Water Budget Characterization Methods

8.1 Water-Related Hydrometeorological Data
8.1.1 Precipitation (Nonrecording Gages)
8.1.2 Precipitation (Recording Gages)
8.1.3 Humidity Measurement (Psychrometers)
8.1.4 Humidity Measurement (Hygrometers)
8.2 Other Hydrometeorological Data
8.2.1 Air Thermometry (Manual)
8.2.2 Air Thermometry (Electric)
8.2.3 Wind Speed
8.2.4 Wind Direction
8.2.5 Atmospheric Pressure
8.2.6 Solar Radiation (Pyranometers)
8.2.7 Solar Radiation (Other Radiometers)
8.3 Evapotranspiration (Water Balance Methods)
8.3.1 Lysimeters
8.3.2 Soil Moisture Budget
8.3.3 Water Budget Methods
8.3.4 Evaporation Pans
8.3.5 Evaporimeters and Atmometers
8.3.6 Chloride Tracer
8.3.7 Ground-Water Fluctuation
8.3.8 Other Transpiration Methods
8.4 Evapotranspiration (Micrometeorological Methods)
8.4.1 Empirical Equations
8.4.2 Physically-Based Equations (Penman and Related Methods)
8.4.3 Mass Transfer Methods

8.4.4 Energy Budget Methods
8.4.5 Profile/Gradient Method
8.4.6 Eddy Correlation Method

9. Vadose Zone Soil-Solute/Gas Sampling and Monitoring Methods

9.1 Solute Movement (Indirect Methods)
9.1.1 Four Probe Electrical Resistivity
9.1.2 EC Probes
9.1.3 Porous Matrix Salinity Sensors
9.1.4 Electromagnetic Sensors
9.2 Direct Soil-Solute Sampling (Suction Methods)
9.2.1 Vacuum-Type Porous Cup
9.2.2 Vacuum-Pressure Type Porous Cup
9.2.3 Vacuum-Plate Samplers
9.2.4 Membrane Filter
9.2.5 Hollow Fiber
9.2.6 Ceramic Tube Sampler
9.2.7 Capillary Wick Sampler
9.3 Direct Soil-Solute Sampling (Other Methods)
9.3.1 Free-Drainage Samplers
9.3.2 Perched Water Table
9.3.3 Absorbent Methods
9.3.4 Solids Sampling with Soil-Water Extraction
9.3.5 Solids Sampling with Soil-Saturation Extract
9.3.6 Solids Sampling for Volatile and Microbial Constituents
9.3.7 SEAMIST
9.4 Gaseous Phase Characterization
9.4.1 Soil-Gas Sampling (Static)
9.4.2 Soil-Gas Probes
9.4.3 Tank/Pipeline Leak Sensors
9.4.4 Air Pressure
9.4.5 Gas Permeability and Diffusivity
9.5 Contaminant Flux
9.5.1 Solute Flux Methods
9.5.2 Soil-Gas Flux

10. Chemical Field Screening and Analytical Methods

10.1 Field Measured General Chemical Parameters
10.1.1 pH/Alkalinity/Acidity
10.1.2 Redox potential (Eh)/Dissolved Oxygen
10.1.3 Other Parameters
10.2 Contaminant Sample Extraction Procedures
10.2.1 Gas Headspace/Vacuum Extraction
10.2.2 Purge and Trap Methods
10.2.3 Solvent/Chemical Extraction/Microextraction
10.2.4 Thermal Treatment Methods
10.2.5 Other Extraction Methods
10.3 Gaseous Phase Analytical Techniques
10.3.1 Total Organic Vapor Survey Instruments
10.3.2 Specific Gas/Organic Vapor Detectors
10.3.3 Gas Chromatography (GC)
10.3.4 Mass Spectrometry (MS) and GC/MS
10.3.5 Atomic Absorption Spectrometry (AAS)
10.3.6 Atomic Emission Spectrometry (AES)
10.3.7 Ion Mobility Spectrometry (IMS)
10.4 Luminescence/Spectroscopic Analytical Techniques
10.4.1 X-Ray Fluorescence (XRF)
10.4.2 Other Luminescence Techniques
10.4.3 Other Spectrometric/Spectrophotometric Techniques
10.4.4 Other Spectroscopic Techniques

10.5 Wet Chemistry Analytical Techniques
10.5.1 Colorimetric Techniques/Kits
10.5.2 Immunochemical Techniques
10.5.3 Liquid Chromatography
10.5.4 Electrochemical Techniques
10.6 Other Analytical Techniques
10.6.1 Radiological Techniques
10.6.2 Gravimetric/Volumetric Techniques
10.6.3 Magnetic Methods
10.6.4 Microscopic Techniques
10.6.5 Other Chemical Sensors
10.6.6 Other Biological Techniques

Appendix C. Guide to Major References on Subsurface Characterization, Monitoring, and Analytical Methods

Appendix D. Guide to Major Vadose Zone Models for Water Budget and Exposure Modeling

NOTICE

This document has been reviewed in accordance with the U.S. Environmental Protection Agency's (EPA's) peer and administrative review policies. Mention of trade names or commercial products does not constitute endorsement or recommendation for use.

This document is not intended to be a guidance or support document for a specific regulatory program. Guidance documents are available from EPA and must be consulted to address specific regulatory issues.

ACKNOWLEDGEMENTS

This document was prepared for EPA's Center for Environmental Research Information (CERI), Cincinnati, Ohio, and has benefitted from the input of the reviewers listed below. Every effort has been made to provide comprehensive coverage and up-to-date information. Due to the large number of techniques and references in this guide, errors or omission in citations might have occurred. These errors are the responsibility of the author, who would appreciate being informed of the need for any corrections or additions at the address indicated below.

Author:

J. Russell Boulding, Eastern Research Group, Inc. (ERG), 4664 N. Robs Lane, Bloomington, IN 47408

Project Management:

Susan Schock, EPA CERI, Cincinnati, OH
Heidi Schultz, ERG, Lexington, MA

Editing and Production:

Anne Donovan, ERG, Lexington, MA

Technical Reviewers (Chapters and appendices reviewed noted in parentheses):

Frederick Cornell, Environmental Liability Management, Princeton, NJ (10)
Lawrence Eccles, U.S. EPA, EMSL, Las Vegas, NV (9)
Lorne Everett, Metcalf and Eddy, Santa Barbara, CA (6,9)
Peter Haeni, U.S. Geological Survey, Hartford, CT (1)
Jan Hendrickx, Department of Geosciences, New Mexico Tech, Socorro, NM (4,7)
Paul C. Heigold, Illinois State Geological Survey, Champaign, IL (1,3)
Beverly Herzog, Illinois State Geological Survey, Champaign, IL (4,5,6,7,9,A)
David Kaminski, QED Ground Water Specialists, Walnut Creek, CA (5)
Peter Kearl, Oak Ridge National Laboratory, Grand Junction, CO (7,8)
Jack Keeton, U.S. Army Corps of Engineers, Omaha, NE (A)
W. Scott Keys, Geokeys, Inc., Longmont, CO (Tables 3-1 and 3-2)
Eric Koglin, U.S. EPA, EMSL, Las Vegas, NV (10)
Mark Kram, NEESA, Port Hueneme, CA (10)
Robert Powell, U.S. EPA, RSKERL, Ada, OK (5,B)
Robert Puls, U.S. EPA, RSKERL, Ada, OK (5,B)
James Quinlan, Nashville, TN (4)
Charles Riggs, Sverdrup Environmental, St. Louis, MO (2)
Ronald Schalla, Battelle Pacific Northwest Laboratory, Richland, WA (A,B)
Ronald Sims, Utah State University, Logan, UT (2,6,7,8,C,D)
James Ursic, U.S. EPA, Region 5 (1,3)
Mark Vendl, U.S. EPA, Region 5 (1,3)
John Williams, U.S. Geological Survey, Albany, NY (3)

Figures in this guide from copyrighted sources are reproduced by permission, with all rights reserved by the copyright holder, as follows (figure numbers refer to the numbers used in this guide):

American Geophysical Union, Washington, DC (Water Resources Research): Figure 1.6.2.

American Petroleum Institute, McLean, VA: from API Publication 4367, Figures 5.1.4c, 5.2.4, 5.3.1, 5.3.2a, 5.3.3c, 5.4.1, and 5.7.2c.

American Society for Testing and Materials (ASTM), Philadelphia, PA: Figures 1.3.5, 3.4.6, 5.5.2a and b, 5.6.2b, and A.1.

American Society of Agronomy/Soil Science Society of America, Madison, WI: Figures 1.6.3, 4.2.1b, 4.2.2, 4.2.3, 6.1.4b, 6.1.7, 6.2.4, 6.2.6, 6.2.7, 6.3.3b, 7.1.1, 7.2.1, 7.2.4, 7.2.2, 7.2.3, 7.2.6, 7.3.2, 7.3.5, 7.3.6, 7.3.7, 7.3.8, 7.5.4, 8.3.1d, 8.3.5a, 9.1.2a, 9.1.3, 9.2.5, 9.2.7, 9.4.4, 9.4.5a, 9.5.2, 10.3.5, 10.6.3, and 10.6.4.

American Society of Civil Engineers, New York, NY: Figures 1.4.4b and 3.4.4d.

American Water Resources Association, Bethesda, MD: Figure 9.3.2.

Electric Power Research Institute, Palo Alto, CA: Figures 1.2.2a and b, 1.4.6, 1.5.3, 1.5.1a, 2.3.2a and b, 2.3.3a, 2.4.1, 2.4.2, 3.4.4, 4.1.1, 4.1.3, 4.1.4, 4.1.6, 4.1.7, 5.5.3, 6.2.2b, and 7.3.4.

Elsevier Science Publishers, Amsterdam, The Netherlands (Journal of Hydrology): Figure 9.3.1.

Ground Water Publishing Company (formerly Water Well Journal Publishing Company), Dublin, OH: Figures 1.3.1c, 1.3.4, 1.4.2, 1.4.3a, 2.1.5b, 2.2.2a, 2.4.4, 3.5.7, 3.6.2b, 4.4.5b, 5.2.1d, 5.2.3, 5.5.1, 5.5.2c, 7.3.3, 9.2.1b, 9.4.2c, 9.4.5a, A.5b, and B.2a.

Hazardous Materials Control Research Institute, Greenbelt, MD: Figures 3.4.5a-c, 10.2.3b, and 10.3.4c.

International Association of Hydrogeologists/Verlag Heinz Heise, Hannover, Germany: Figures 3.1.3, 3.5.1, and 3.5.3.

John Wiley & Sons, Inc., New York, NY: Figures 2.1.4, 8.3.7, and 3.6.2a.

Johnson Filtration Systems/Wheelabrator Engineered Systems, St. Paul, MN: Figures 2.1.2a, 10.6.2, and Table 2-2.

Lewis Publishers, a subsidiary of CRC Press, Boca Raton, Florida: Figures 10.4.1b, A.2a and b, and A.3.

National Ground Water Association (formerly National Water Works Association), Dublin, OH: Figures 1.4.4a, 2.1.7, 2.1.12, 2.2.2b, 3.2.3, 3.4.5d, 3.5.5, 4.3.1b, 5.5.4, 5.5.5, 5.5.6c, 7.5.1, 8.1.1a, 8.1.2a, 9.3.6, 9.3.7, 9.4.2b, B.2, and Tables 7.1.1 and B-2.

Society of Exploration Geophysicists, Tulsa, OK (Geophysics): Figures 1.1.5, 1.2.1c, 3.1.6, and 3.2.2b.

Timco Manufacturing, Inc., Prairie du Sac, WI: Figures 1.6.1, 3.3.2, 4.1.10, 5.1.1b, 5.1.3, 5.1.5, 5.2.6b, 5.4.3b and c, 5.6.2a, 5.5.3a and b, 5.6.1a, 6.1.1, 6.1.2, 6.1.3, 6.1.4a, 6.1.5, 6.2.3, 6.2.2a, 6.2.5, 9.2.3, 9.2.4, and 9.3.1b.

Water Resource Publications, Highlands Ranch, CO: Figure 1.1.1b.

Williams and Wilkins, Baltimore, MD (Soil Science): Figure 9.3.3.

INTRODUCTION

Many EPA programs, including those under the Resource Conservation and Recovery Act (RCRA) and the Comprehensive Response, Compensation, and Liability Act (CERCLA), require subsurface characterization and monitoring to detect ground-water contamination and provide data to develop plans to prevent new contamination and remediate existing contamination. Hundreds of specific methods and techniques exist for characterizing, sampling, and monitoring the saturated and unsaturated zones at contaminated sites. Existing field methods are often refined and new methods are continually being developed. This guide is designed to serve as a single, comprehensive source of information on existing and developing field methods as of early 1993. Appendix C provides some suggestions on the best places to obtain information on new developments that occur after this guide is completed.

USE OF THIS GUIDE

As the title "Desk Reference Guide" implies, this is not a how-to handbook for the field. Instead, the guide provides, in a single document, enough information about specific techniques to make some judgements concerning their potential suitability for a specific site and also gives information on where to go to find more detailed guidance on how to use the technique. This guide can be used in two major ways:

1. **Development of Site Characterization and Monitoring Plans.** Each subsection listed in the table of contents represents a one-to-two page summary of a specific technique or several related techniques. A table at the beginning of each of the 10 major sections (summarized below), provides general comparative information on all methods covered in the sections, and cross-references relevant methods covered in other parts of the guide. In the summary tables, **boldfacing** is used to identify those techniques that are most commonly used. These tables might also be helpful in identifying new, or less common methods that might be of value for specific objectives or site conditions. Within a grouping of method summary sheets, techniques are listed in approximate order of frequency of use.

2. **Overview of Specific Methods.** Individuals who are unfamiliar with specific methods that are being used or proposed to be used at a hazardous waste site can find a concise description of the method, its applications, major advantages and disadvantages in its use, and major reference sources where more detailed information can be found about the method. To locate information on a specific method, the table of contents should be used to identify the section in which the method is located. If the term used to describe the method is not included in the table of contents, go to the summary table at the beginning of the appropriate section of the guide. If the summary table does not use the term, peruse the listing of alternative names for techniques in the individual summary sheets. For example, the **hydraulic percussion** drilling method is not listed in the table of contents, but appears in summary Table 2-1. The **hollow-rod** method, is listed in neither the table of contents or the summary, and requires looking through the individual summary sheets in Section 2.1 (Drilling Methods), until Section 2.1.6 is reached, which identifies the hollow-rod method as an alternative term for hydraulic percussion.

GUIDE ORGANIZATION AND FORMAT

Site characterization, monitoring, and field screening are related activities for which there might not be a clear dividing line. Generally, site **characterization** methods involve one-time field point measurements and sampling (or continuous measurements in the case of some geophysical methods) of physical and chemical properties of the subsurface, or multiple measurements to characterize seasonal variations at the site. **Monitoring** methods, on the other hand, involve sampling or measurements at a single point or the same area over time. Many methods can be used for both site characterization and monitoring, and site characterization activities can continue after monitoring begins to further refine subsurface interpretations. **Field screening** is a form of site characterization that involves the use of rapid, relatively low-cost field methods (typically chemical) in the field during site characterization to assist in the selection of locations for permanent monitoring well installations or for guiding remediation activities. **Field analytical** methods are distinguished from field screening methods by having a higher degree of precision and accuracy than field screening methods. This distinction in discussed further in the introduction to Section 10.

This guide includes two volumes. The first volume covers solids and ground water and the second volume covers the vadose zone. The site characterization, monitoring, and field screening methods covered in the guide are divided into 10 major sections, which are described below. Because site characterization generally precedes monitoring, earlier sections of the guide tend to cover site characterization methods, while later sections cover monitoring. Finally, field screening and analytical methods are covered in Section 10.

Section 1 (Remote Sensing and Surface Geophysical Methods) covers more than 30 airborne and surface geophysical methods that are often valuable during the initial phases of site characterization. These methods can provide preliminary information on the subsurface to provide guidance on placement of boreholes for direct observation of the subsurface and installation of permanent monitoring wells. A number of these methods can also be useful for monitoring the movement of contaminant plumes.

Section 2 (Drilling and Solids Sampling Methods) covers 20 drilling methods, and a variety of power-driven and hand-held devices for sampling soils and geologic materials. The section also briefly identifies important soil physical properties that are described in the field.

Section 3 (Geophysical Logging of Boreholes) covers more than 40 borehole logging and sensing techniques for the physical and chemical characterization of the subsurface.

Section 4 (Aquifer Test Methods) covers 10 methods for measuring ground-water well levels or pressure, pumping and slug tests, six categories of ground-water tracers, and several other techniques for measurement of aquifer properties that might be needed for modeling ground-water flow and contaminant transport.

Section 5 (Ground-Water Sampling Devices and Installations) covers more than 20 types of portable ground-water sampling devices and different types of permanent well installations for portable sampling devices. Appendix A **(Design and Installation of Monitoring Wells)** provides more detailed information on such installations. Section 5 also includes various types of portable and fixed in situ sampling devices and installations. General ground-water sampling methods are covered in Appendix B.

Section 6 (Vadose Zone Hydrologic Properties (I): Water State) covers over 20 methods for measuring vadose zone soil water potential, moisture content, and other soil hydrologic characteristics.

Section 7 (Vadose Zone Hydrologic Properties (II): Infiltration, Conductivity, and Flux) covers four approaches to measuring or estimating infiltration and approximately 30 methods for measuring unsaturated and saturated hydraulic conductivity and water flux in the vadose zone.

Section 8 (Vadose Zone Water Budget Characterization Methods) covers a large number of methods for obtaining data that might be required for water budget calculations to assess contaminant transport in the vadose zone. This includes 37 methods for obtaining various types of hydrometeorologic data, and 16 methods for measuring or estimating transpiration or evapotranspiration.

Section 9 (Vadose Zone Soil-Solute/Gas Sampling and Monitoring Methods) covers six indirect methods for monitoring soil solute movement, more than 20 methods for direct sampling of soil solutions, and a variety of methods for soil gas sampling and gaseous phase characterization in the vadose zone. The section also summarizes a number of methods to measure or estimate soil solute and gas flux in the vadose zone.

Section 10 (Field Screening and Analytical Methods) covers a large number of techniques and groups of techniques for field screening and analysis: Chemical field measurement (three summary sheets), sample extraction procedures (five summary sheets), gaseous phase analytical techniques (five summary sheets), luminescence/spectroscopic techniques (four summary sheets); wet chemistry methods (four summary sheets), and other techniques (five summary sheets).

More than 280 specific field methods are covered in this guide. The large number of methods precludes detailed coverage of any single method, which is often available from other sources. Instead, each method has a single-page summary in a uniform format that includes:

1. General method category title.
2. Method title.
3. Other names used to describe method.
4. Uses at contaminated sites.
5. Method/procedure/device description.
6. Method selection considerations.
7. Frequency of use.
8. Standard Methods/Guidelines (ASTM or other sources that give detailed instruction for use of the specific method).
9. Sources for additional information (which provides comparative information where other methods for similar applications are available).

The frequency of use ratings are very approximate, and actual usage might vary from region to region. Similarly, the summary tables at the beginning of each section should not be relied upon as definitive. Specific instrumentation or variants of techniques covered in this guide might have different characteristics than indicated in the summary tables. A specific method that has been rarely used might be suited for certain site-specific conditions. Conversely, site-specific conditions might make a widely-used technique a poor method of choice. When in doubt, obtaining the opinion of more than one person familiar with a particular technique is advisable.

Wherever possible, one or more figures or tables that illustrate instruments or how a method is used are included with summary sheets. These figures and tables have the same number as the section to which they are related (i.e., Figure 1.1.1 and Table 1.1.1 are located after Section 1.1.1 on visible and near infrared remote sensing). Each major section has a brief introduction that defines major concepts and provides an overview of methods covered in the section. Summary tables and figures at the beginning of each section, and index reference tables near the end of a section are numbered in sequence (i.e., Tables 1-1 to 1-3 provide summary information on remote sensing and geophysical methods, and Tables 1-4 and 1-5 provide an index to references contained at the end of the section).

SOURCES OF ADDITIONAL INFORMATION

As indicated above, two types of references are given for each method. First, if ASTM, EPA, or other standard methods, protocols, or guidelines related to the method have been promulgated, or are being developed, these are identified. Otherwise, references that give detailed instructions on how to use the method are cited, if available.

Secondly, major references that provide information on the use of the method in the context of ground-water and hazardous waste site investigations are listed. All references are in a single section. EPA documents are indicated (with EPA and NTIS numbers). Appendix C (Guide to Major References on Subsurface Characterization and Monitoring) provides annotated descriptions of more than 70 major books and reports and over 80 published conference and symposium proceedings that can serve as information sources for general and specific aspects of soil quality and ground-water field screening, characterization, and monitoring.

The following EPA documents are recommended for use as companions to this guide (all of which are available for no cost from U.S. EPA's Center for Environmental Research Information (see Appendix C for ordering address): **Ground-Water Handbook, Volume 1: Ground Water and Contamination; Volume 2: Methodology** (U.S. EPA, 1990 and 1991a), **Site Characterization for Subsurface Remediation** (U.S. EPA, 1991b), **Handbook of Suggested Practices for the Design and Installation of Ground-Water Monitoring Wells** (Aller et al., 1991), **Description and Sampling of Contaminated Soils: A Field Pocket Guide** (Boulding, 1991), and **Use of Airborne, Surface, and Borehole Geophysical Techniques at Contaminated Sites: A Reference Guide** (U.S. EPA, 1993). Other EPA documents that are available from NTIS and commercially published references that can be of potential value are too numerous to be named individually here. Appendix B should provide guidance concerning other publications that might be worth obtaining.

REFERENCES

Aller, L. et al. 1991. Handbook of Suggested Practices for the Design and Installation of Ground-Water Monitoring Wells. EPA/600/4-89/034, 221 pp. Also published in 1989 by the National Water Well Association, Dublin, OH in its NWWA/EPA series, 398 pp. [Nielsen and Schalla (1991) contain a more updated version of the material in this handbook that is related to design and installation of ground-water monitoring wells.]

Boulding, J.R. 1991. Description and Sampling of Contaminated Soils: A Field Pocket Guide. EPA/625/12-91/002, 122 pp.

Nielsen, D.M. and R. Schalla. 1991. Design and Installation of Ground-Water Monitoring Wells. In: Practical Handbook of Ground-Water Monitoring, D.M. Nielsen (ed.), Lewis Publishers, Chelsea, MI, pp. 239-331.

U.S. Environmental Protection Agency (EPA). 1990. Handbook Ground Water. Volume I: Ground Water and Contamination. EPA/625/6-90/016a, 144 pp.

U.S. Environmental Protection Agency (EPA). 1991a. Handbook Ground Water. Volume II: Methodology. EPA/625/6-90/016b, 141 pp.

U.S. Environmental Protection Agency (EPA). 1991b. Site Characterization for Subsurface Remediation. EPA/625/4-91/026, 259 pp.

U.S. Environmental Protection Agency (EPA). 1993. Use of Airborne, Surface, and Borehole Geophysical Techniques at Contaminated Sites: A Reference Guide. EPA/625/R-92/007.

SECTION 6

VADOSE ZONE HYDROLOGIC PROPERTIES (I): WATER STATE

Water state in the subsurface is measured in terms of **hydraulic head** in the saturated zone (see Section 4.1) and **negative pressure potential** or **suction** in the vadose zone. Water movement in the vadose zone is determined by the interaction of three major types of energy potentials: (1) **Matric** potential (the attraction of water to solids in the subsurface, (2) **osmotic** potential (the attraction of solute ions to water molecules), and (3) **gravitational** potential (the attraction of the force of gravity toward the earth's center). Matric and osmotic potentials are negative and serve to inhibit the movement of water when the vadose zone is unsaturated. Unsaturated flow occurs, however, whenever the force of gravity on a water molecule exceeds matric plus osmotic potential. Water flow in the vadose zone is strongly influenced by the moisture content, with flow decreasing as moisture content decreases.

Table 6-1 provides summary information on six major techniques for measuring soil water potential and a dozen methods for measuring soil moisture content. The measurement of soil water potential and moisture content in the vadose zone is intimately connected, and a specific measurement technique can be classified as measuring potential or moisture content, depending on the perspective of the writer in the literature. Either measurement can be used to obtain the other if a **moisture characteristic curve** has been developed (Section 6.3.1). **Porous cup tensiometers** are the most commonly used method for measuring soil water potential in the vadose zone. The **gravimetric** method is most commonly used to measure moisture content from soil samples, and the **neutron probe** and **gamma gamma** methods are most commonly used for in situ measurement of soil moisture. The relatively recent commercial availability of **dielectric** or capacitance sensors (Section 6.2.3) is likely to increase the use of this method, which provides accuracy similar to the neutron probe without some of the disadvantages of nuclear methods (i.e., radioactive sources). Similarly, **time domain reflectometry**, a relatively new method (Section 6.2.4), is becoming more widely used with the advent of commercially available units. All methods for vadose zone measurement of water content or matric potential have limitations with respect to soils contaminated with nonaqueous phase liquids, due to interference effects.

Other field-measurable hydrologic properties of the vadose zone, which might be of use in evaluating contaminant transport include **water sorptivity** and **diffusivity** (Section 6.3.2) and **available water capacity** (Section 6.3.3). Sorptivity and diffusivity are properties that are significant in evaluating infiltration of water into the subsurface (discussed in more detail in Section 7.1). Available water capacity is a measure of the ability of soil to store water.

Table 6-1 Summary Information on Vadose Zone Water State Measurement and Monitoring Methods

Method	Property Measured	Accuracy/ Range	Sections
Vadose Zone Soil Water Potential Measurement[a]			
Porous Cup Tensiometers	Capillary pressure	0 to -85 kPa[b] 0 to -80 kPa[c]	6.1.1
Thermocouple Psychrometers	Relative humidity	-200 to -8,000 kPa[b] -100 to -5,000 kPa[c]	6.1.2
Water Activity Meter	Relative humidity	0 to -31,600 kPa	6.1.2
Resistance Sensors	Resistance	-50 to -1,500 kPa[c]	6.1.3
Gypsum Blocks	Resistance	0 to -30 kPa[b]	6.1.3
Fiberglass/Nylon Cells	Resistance	No limits[b]	6.1.3
Electrothermal Methods	Heat transfer	0 to -200 kPa	6.1.4
Osmotic Tensiometers	Osmotic + pressure potential	0 to -1,500 kPa[b]	6.1.5
Filter-Paper Method	Water content	-10 to -100,000 kPa	6.1.6
Electro-Optical Sensors	Optical properties	0 to -2,400 kPa	6.2.6
Vadose Zone Soil Water Content Measurement[a]			
Gravimetric	Weight	[d]	6.2.1
Gamma-Gamma	Radiation	[d]	6.2.2, 3.3.2
Neutron Moisture Probe	Radiation	[d]	6.2.2, 3.3.3
Dielectric Sensors	Dielectric	[d]	6.2.3
Time Domain Reflectometry	Dielectric	[d]	6.2.4
Nuclear Magnetic Resonance	Magnetic field	[d]	3.2.4, 10.6.3
Electro-Optical Sensors	Optical properties	[d]	6.2.6
CAT Scan	Radiation	[d]	6.2.7
Thermal Infrared	Remote sensing	[d]	1.1.3
Active Microwave	Remote sensing	[d]	1.1.4
Four-Electrode Method	Resistivity	[d]	9.1.1
Salinity Sensors	Conductivity	[d]	9.1.3
Electromagnetic Induction	Conductivity	[d]	9.1.4

Boldface = most commonly used methods.

[a]Moisture content can be determined from measurement of soil water potential and vice versa by the use of a moisture characteristic curve, which relates matric potential to water content (Section 6.3.1). The pascal is the Standard International unit for measuring pressure used by the Soil Science Society of America. The bar is commonly used as a pressure unit in vadose zone investigations: 1 kPa = 1 centibar.
[b]Indicated by Rehm et al. (1985).
[c]Indicated by Bruce and Luxmoore (1986).
[d]Most methods for measuring moisture content are accurate to around 1%. Gravimetric methods and nuclear methods can be accurate to 0.1% or less.

6. VADOSE ZONE HYDROLOGIC PROPERTIES (I): WATER STATE

6.1 VADOSE ZONE SOIL WATER POTENTIAL

6.1.1 Porous Cup Tensiometers

Other Names Used to Describe Method: Capillary potentiometer, soil hygrometer, soil moisture meter, transiometer. Tensiometers often are described according to the type of device that is used to measure pressure: Vacuum gauge, water manometer, mercury-water manometer, or electrical pressure transducer.

Uses at Contaminated Sites: Measuring water (matric) potential and gradients in the unsaturated zone; irrigation scheduling; performing root zone delineation; developing moisture characteristic curves (see Section 6.3.1); can be used to measure and monitor changes in moisture content if matric potential-water content relationship is known.

Method Description: Many designs for tensiometers have been developed. Most have the following basic elements: (1) A porous tip or cup attached to a barrel or connective tube, (2) a removable air tight cap for filling the tensiometer with water, and (3) a device to measure pressure in the water in the porous cup. The ceramic cup (or other material, such as fritted glass) is placed in the soil, filled with water, and the unit is sealed. Pores in the cup form a continuum with the pores in the soil, and water moves into or out of the tensiometer until equilibrium is reached. The measured pressure corresponds to the water pressure in the soil. Figure 6.1.1 shows three types of porous cup tensiometers. A **transiometer** is a type of porous cup tensiometer in which a pressure transducer is placed inside the porous cup, rather than at the surface.

Method Selection Considerations: The useful range of tensiometers is 0 to 0.85 bars capillary pressure when the ambient atmospheric pressure is around 76 centimeters of mercury. **Advantages:** (1) Provide continuous in-place measurements of the same soil material over time; (2) are relatively inexpensive and simple; (3) transducer unit responds fairly rapidly to water content changes and can be used for automatic data collection; and (4) transiometers can be used to measure soil water potential in both saturated and unsaturated conditions. **Disadvantages:** (1) Units fail at the air entry value of the ceramic cup, generally about -0.8 atmospheres; (2) unit will not operate properly unless good contact is made between cup and soil; (3) are sensitive to temperature changes; (4) water content estimates prone to error resulting from uncertainty of moisture-matric potential relationship (hysteresis causes different curves depending on soil is wetting or drying); (5) difficult to install at great depth in the vadose zone; (6) air in the system causes errors in measurement, and special efforts, such as using deaired water, are required to minimize such problems; (7) lower air pressures at higher elevations reduce the operating range; (8) operation will be affected if the surface tension characteristics of chemical liquid wastes in the vadose zone differ from that of water; and (9) multiple calibration curves are required for soil moisture monitoring in stratified media.

Frequency of Use: Widely used for pressure measurement; usually not recommended for water content measurement.

Standard Methods/Guidelines: ASTM (1991), Cassel and Klute (1986).

Sources for Additional Information: Brakensiek et al. (1979), Gairon and Hadas (1973), Holmes et al. (1967), Morrison (1983), Rehm et al. (1985), Stannard (1986), Troolen et al. (1986-transiometer), Wilson (1980, 1981). See also, Table 6-2.

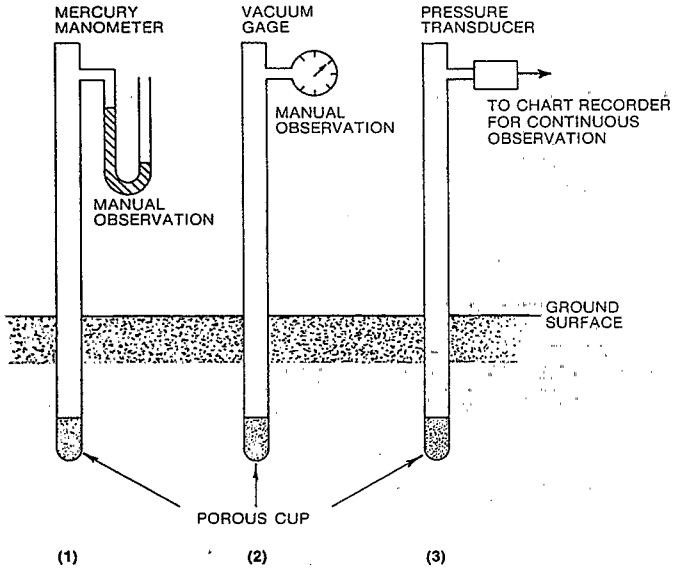

Figure 6.1.1 Three types of porous-cup tensiometers (Morrison, 1983, by permission).

6. VADOSE ZONE HYDROLOGIC PROPERTIES (I): WATER STATE

6.1 VADOSE ZONE SOIL WATER POTENTIAL

6.1.2 Thermocouple Psychrometers

Other Names Used to Describe Method: Spanner/Peltier psychrometer, Richards-Ogata/wet-loop psychrometer, thermocouple hygrometer, in situ hygrometer.

Uses at Contaminated Sites: Measuring water potential (sum of osmotic and matric potential) and gradients in the unsaturated zone; estimating water content (if moisture characteristic curve is developed, see Section 6.3.1); measuring soil water flux in the vadose zone (see Section 7.5.2).

Method Description: Soil water potential is calculated based on measurement of relative humidity within the soil voids. A basic psychrometer unit consists of: (1) A porous bulb, with a chamber in which the relative humidity of the soil is sampled, (2) a sensitive thermocouple, (3) a heat sink, and (4) a reference electrode. Two major types are available, **wet bulb** and **dew point**; both types rely on cooling of the thermocouple junctions by the Peltier effect, but differ in how temperature is controlled once the dew point of the sample is reached. With in situ measurements of soil water potential, the thermocouple is protected by a cup-shaped device that maintains a void in the soil. Calibration curves relating relative humidity to water potential, osmotic potential, and temperature (if temperature in the subsurface varies) need to be developed in the laboratory. Figure 6.1.2 illustrates: (a) A basic Spanner, and (b) a modified Spanner-type psychrometer.

Method Selection Considerations: The dew point method is more accurate than the wet bulb method. The useful range is 10 to 70 bars capillary pressure. **Advantages:** (1) In situ pressure measurements are possible for very dry soils in arid regions; (2) continuous recording of pressures is possible; (3) can be interfaced with portable or remote data collection systems; and (4) depth is no limitation (installations have gone as deep as 300 feet). **Disadvantages:** (1) Water content estimates prone to errors due to hysteresis; (2) even in very dry soils, the relative humidity is high, making accurate calibration difficult; (3) good contact between bulb and surrounding material might be difficult to achieve; (4) provide only point measurements; (5) accurate calibration curves for deep regions of the vadose zone might be difficult to obtain; (6) instruments are expensive, fragile, and require great care in installation; (7) contamination of the chamber interior or thermocouple can result in erroneous readings; (8) interference from dissolved solutes is likely in calcium-rich waste and acid media and can cause thermocouple wire corrosion problems; (9) perform very poorly in very wet media (water pressure >1 bar); (10) accuracy of near-surface measurements is adversely affected by diurnal changes in heat flux; (11) unsealed cup units are susceptible to attack by fungi and bacteria; and (12) ceramic cup psychrometers respond slowly to rapid changes in moisture content.

Frequency of Use: Widely used in agricultural research; sometime used at hazardous waste sites in the arid west.

Standard Methods/Guidelines: Rawlins and Campbell (1986).

Sources for Additional Information: Morrison (1983), Rehm et al. (1985), Thompson et al. (1989), Wilson (1981). See also, Table 6-2.

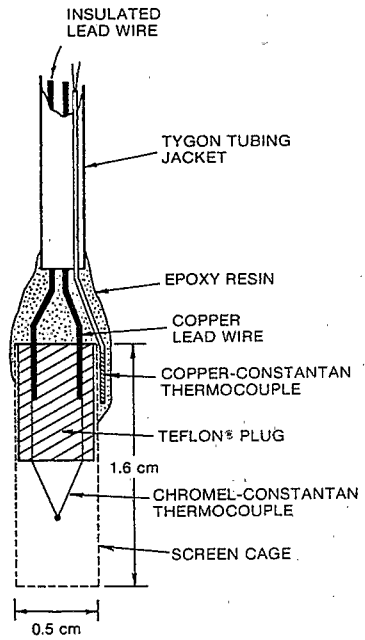

(a)

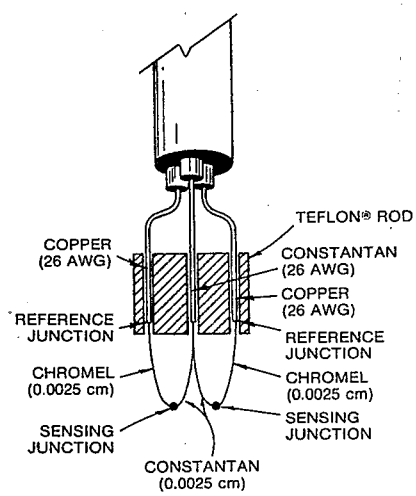

(b)

Figure 6.1.2 **Thermocouple psychrometers: (a) Spanner psychrometer (Morrison, 1983, after Meyn and White, 1972, by permission); (b) Double-loop, temperature-compensating psychrometer (Morrison, 1983, after Meeuwig, 1972, by permission).**

6. VADOSE ZONE HYDROLOGIC PROPERTIES (I): WATER STATE

6.1 VADOSE ZONE SOIL WATER POTENTIAL

6.1.3 Electrical Resistance Sensors

Other Names Used to Describe Method: Four-electrode soil moisture probe, electrical resistance blocks, porous-block method, soil moisture blocks.

Uses at Contaminated Sites: Measuring/monitoring water potential and water content in the unsaturated zone; monitoring of soil freezing.

Method Description: In the **porous-block method**, two electrodes (Figure 6.1.3a and b) are imbedded in a porous block (nylon cloth, fiberglass, or casting plaster), or multi-electrode probes can be used (Figure 6.1.3c). Calibration curves are first developed by placing the porous block in soil typical of the area to be measured and resistivity is plotted against changes in matric potential. In the field, the porous blocks can be placed in a hole and buried, or horizontally in the side of a trench, and the blocks are allowed to equilibrate with the surrounding soil. Matric potential then can be monitored by taking resistance measurements, using the calibration curves to convert the measurements to pressure. Water content also can be monitored either by using the procedure described above to develop a calibration curve for water content or by using a moisture characteristic curve if a resistance-water potential calibration curve has been developed (Section 6.3.1).

Method Selection Considerations: **Advantages:** (1) Are inexpensive and relatively easy to install; (2) measurements can be recorded from many units over a large area using an automated recording system; and (3) can be calibrated for either suction or water content. **Disadvantages:** (1) Calibration procedures can be complicated and time consuming if accurate measurement of water potential for evaluation of hydraulic gradient is required; (2) restricted water flow at the interface between the smooth face of a porous black creates some problems for measurements in coarse soil material; (3) small changes in electrolyte concentration of the soil water (which might well occur at contaminated sites) will affect resistivity readings; (4) measurements are made in equilibrium with matric potential, so moisture content is inferred from matric potential rather than actual moisture content; (5) gypsum sensors might dissolve in the subsurface; (6) water content estimates are prone to error resulting from uncertainty of moisture-matric potential relationship (hysteresis causes different curves depending on soil is wetting or drying); and (7) are rather insensitive to moisture changes in the wet range.

Frequency of Use: Commonly used for irrigation timing and other qualitative field-monitoring programs. Less common for accurate measurement of soil hydrologic properties.

Standard Methods/Guidelines: Campbell and Gee (1986), Gardner (1986).

Sources for Additional Information: Bouyoucos (1960), Everett et al. (1983), Gairon and Hadas (1973), Holmes et al. (1967), Morrison (1983), Rehm et al. (1985), Schmugge et al. (1980). See also, Table 6-2.

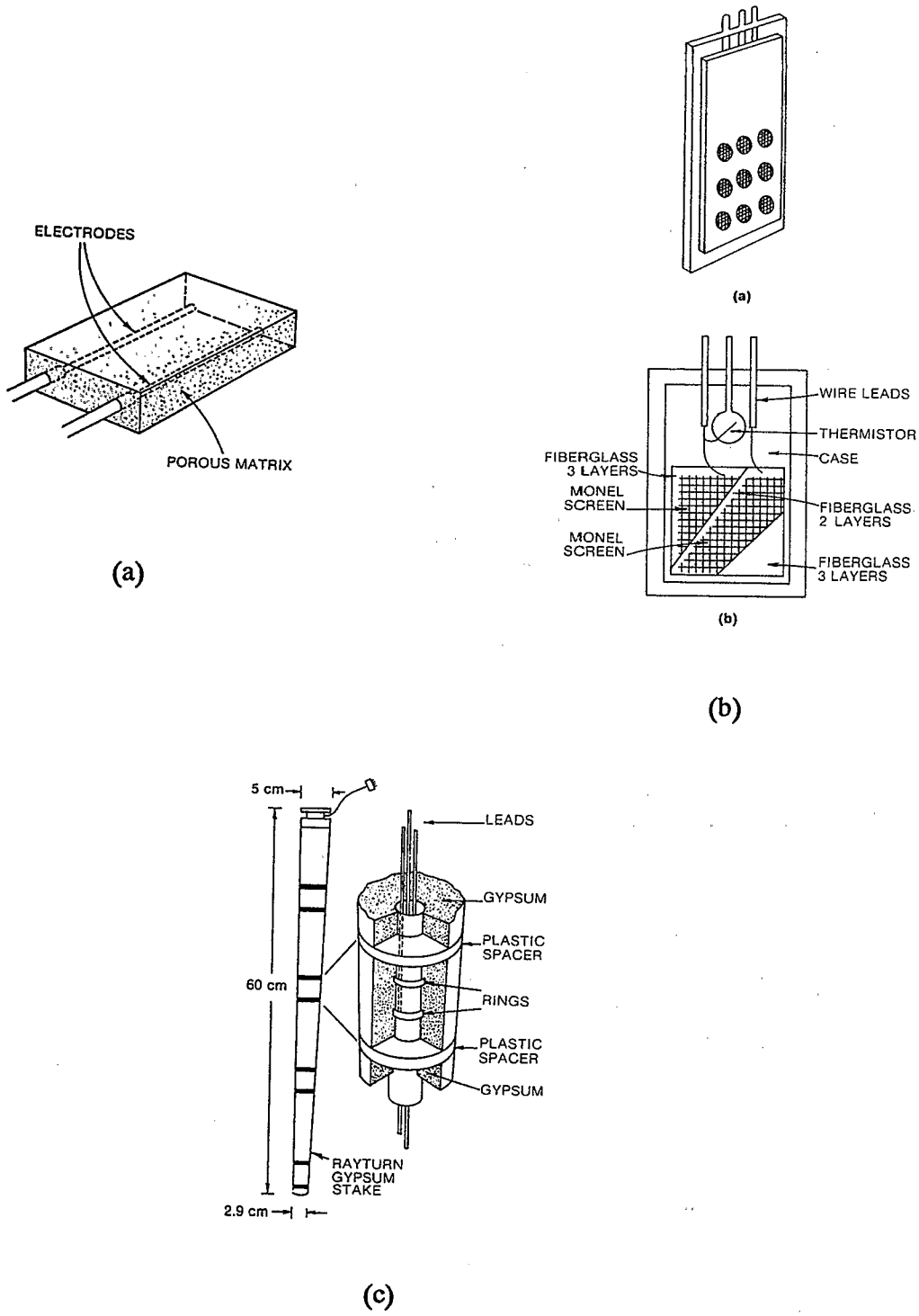

Figure 6.1.3 **Electrical resistance sensors: (a) Rectangular soil moisture block (Morrison, 1983, by permission); (b) Fiberglass and Monel soil moisture sensor with thermistor (Morrison, 1983, after Colman and Hendrix, 1949, by permission); (c) Multielectrode probe (Morrison, 1983, after Perrier and Marsh, 1958, by permission).**

6.1.4 Electrothermal Methods

Other Names Used to Describe Method: Thermal diffusivity, heat diffusion/dissipation sensors.

Uses at Contaminated Sites: Measuring water potential and gradients in the unsaturated zone; estimating water content (if moisture characteristic curve is developed, see Section 6.3.1); measuring soil temperature.

Method Description: Similar to the resistivity method (Section 6.1.3), except that thermal diffusivity of an implanted porous sensor, which is in equilibrium with the surrounding soil, is measured. A known amount of heat is applied in the center of the sensor and the rate of dissipation is measured, which is a function of water content. Major types of sensors include: (1) **Porous-block** type with embedded electrical elements (Figure 6.1.4a), (2) **direct-contact** type with electrical elements in direct contact with the soil, and (3) **modified direct-contact** probe or cell, in which the heating wire is enclosed in a protective sheath with high thermal conductivity (Figure 6.1.4b). Calibration curves of matric potential vs. temperature difference are obtained in the laboratory with soils from the site using a pressure plate apparatus. The matric potential is related to water content by preparing a moisture characteristic curve (Section 6.3.1).

Method Selection Considerations: Useful range is 0 to 2 bars capillary pressure. **Advantages:** (1) Are simple; (2) can be interfaced with data acquisition systems for remote collection of data; (3) measurements are independent of salt content of soil; (4) calibration appears to remain constant; (5) can be used to measure soil temperature as well as matric potential; and (6) are useful for measurement of water contents in the dry range. **Disadvantages:** (1) Water content estimates subject to hysteresis; (2) calibration is required for each change in texture; and (3) might be difficult to install at depth in the vadose zone and to maintain good contact between the sensor and medium.

Frequency of Use: Uncommon.

Standard Methods/Guidelines: Campbell and Gee (1986).

Sources for Additional Information: Morrison (1983), Thompson et al. (1989), Wilson (1981). See also, Table 6-2.

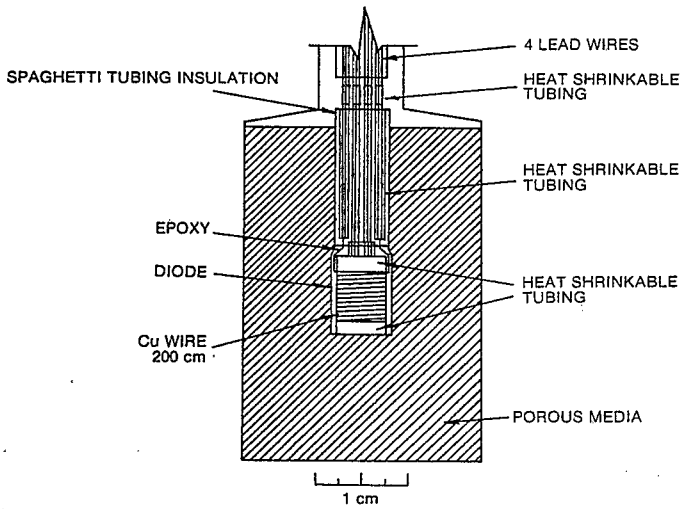

(a)

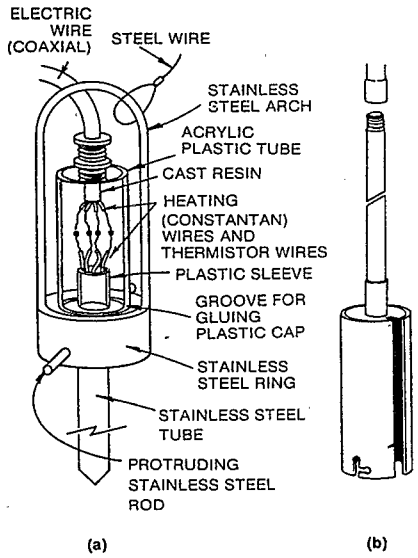

(b)

Figure 6.1.4 **Electrothermal sensors: (a) Porous-block type (Morrison, 1983, after Phene et al., 1971b, by permission); (b) Modified direct-contact probe (Sophocleous, 1979, by permission).**

6.1.5 Osmotic Tensiometers

Other Names Used to Describe Method --

Uses at Contaminated Sites: Measuring of combined osmotic and pressure potential.

Method Description: An osmotic tensiometer uses a confined solution of polyethylene glycol, rather than deaired water, as the reference solution and a semipermeable membrane, which separates the confined solution from the soil water (Figure 6.1.5). Small ions and molecules in the soil water are able pass through the membrane, and once equilibrium is attained between the soil water and the reference solution, a pressure transducer measures subsequent soil moisture-related pressure changes.

Method Selection Considerations: **Advantages:** Allows differentiation of osmotic and pressure components of soil water potential if used with porous cup tensiometer. **Disadvantages:** (1) Are susceptible to fluid leakage and instrument drift; (2) require long equilibration times (hours to days); and (3) are sensitive to temperature changes.

Frequency of Use: Uncommon for reasons cited above. Thermocouple psychrometers are the preferred method for measuring combined osmotic and pressure potential.

Standard Methods/Guidelines --

Sources for Additional Information: Bocking and Fredland (1979), Morrison (1983), Peck and Rabbidge (1966a,b, 1969), Rehm et al. (1985).

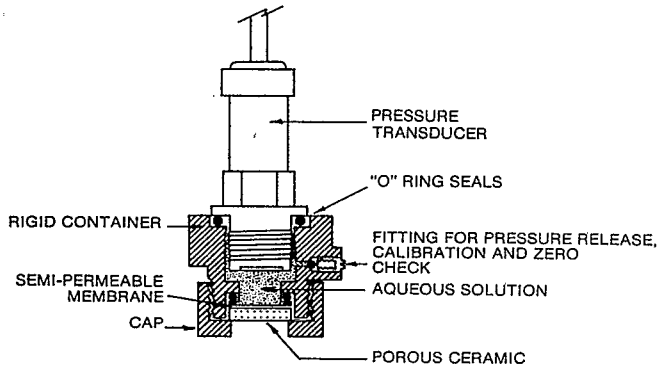

Figure 6.1.5 Osmotic tensiometer (Morrison, 1983, after Peck and Rabbidge, 1966a, by permission).

6. VADOSE ZONE HYDROLOGIC PROPERTIES (I): WATER STATE

6.1 VADOSE ZONE SOIL WATER POTENTIAL

6.1.6 Filter-Paper Method

Other Names Used to Describe Method --

Uses at Contaminated Sites: Measuring soil water potential and/or moisture content.

Method Description: The filter-paper method involves the collection of soil cores at different locations and/or depths. Each soil core is placed in a sealed container in contact with filter paper, which has been pretreated with 3% pentachlorophenol dissolved in methanol to prevent microbial degradation. In the laboratory, the samples are maintained at a constant temperature for at least 1 week to allow equilibration of moisture between the soil and the filter paper. Gravimetric water content of the soil and filter paper is determined using the oven-drying method (see Section 6.2.1). The matric potential then is calculated using a calibration equation (Figure 6.1.6).

Method Selection Considerations: **Advantages:** (1) Reasonably accurate over a wide range of matric potentials; (2) requires minimal and inexpensive equipment; (3) cores can be used to directly measure moisture content and to measure bulk density; and (4) simplicity allows taking a large number of measurement to characterize spatial variability. **Disadvantages:** (1) Soil core collection is destructive and does not allow repeated measurements at exactly the same location (Figure 6.2.1 in the next section shows patterns for sequential sampling, if this method is used); and (2) different filter papers might require development of separate calibration curves.

Frequency of Use: Has commonly been used in studies of western rangeland hydrology.

Standard Methods/Guidelines: ASTM (1992b).

Sources for Additional Information: McQueen and Miller (1968a, 1968b), Sorenson et al. (1989) cite 18 references on this method.

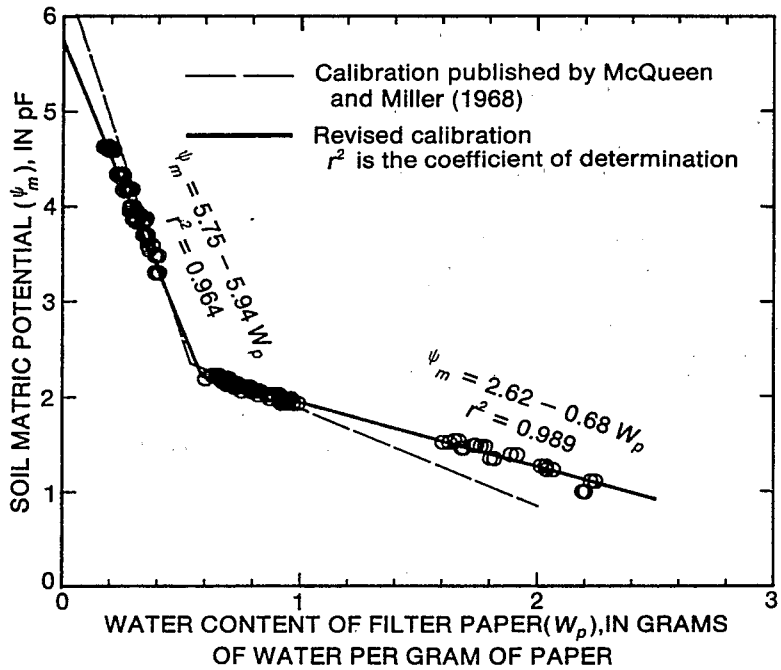

Figure 6.1.6 **Calibration equations (for above and below field capacity) used to determine soil matric potential from filter-paper water content (Sorenson et al., 1989).**

6. VADOSE ZONE HYDROLOGIC PROPERTIES (I): WATER STATE

6.1 VADOSE ZONE SOIL WATER POTENTIAL

6.1.7 Water Activity Meter

Other Names Used to Describe Method: --

Uses at Contaminated Sites: Measuring soil water potential in very dry soils.

Method Description: A water activity meter (another term for relative humidity) can be used to measure soil water potential in a soil using principles similar to thermocouple psychrometers (Section 6.1.2). A small amount of soil (4 centimeters in diameter and 0.5 centimeters thick) on a slide tray is placed in a measuring chamber (Figure 6.1.7). The sample temperature is monitored using a built-in infrared thermometer and the dew point of the water vapor above the sample is measured using a cooled mirror. The dew point and sample temperature are recorded on a data logger and converted to relative humidity, using an algorithm that accounts for temperature differences between the soil sample and chamber as both are equilibrating at room temperature. Gee et al. (1992) obtained good results with a commercially available water activity meter for measuring soil water potential for soil textures ranging from sand to clay.

Method Selection Considerations: **Advantages:** (1) Provides rapid (3 to 5 minutes/sample), accurate measurements over a wide range of soil water potentials (-4 to <-2,640 kPa); (2) allows measurement of soil water potential in soils that are too dry from tensiometer measurements (<-85 kPa); (3) instrumentation is relatively simple and less subject to errors than thermocouple psychrometers for measuring low potentials; and (4) commercially available instrumentation can be readily used; **Disadvantages:** Requires collection of soil samples, so limited to relatively shallow depths if time-series monitoring is desired (see 6.2.1 for possible sampling patterns).

Frequency of Use: Only recently applied to measurement of water potential in soil samples.

Standard Methods/Guidelines: --

Sources for Additional Information: Gee et al. (1992).

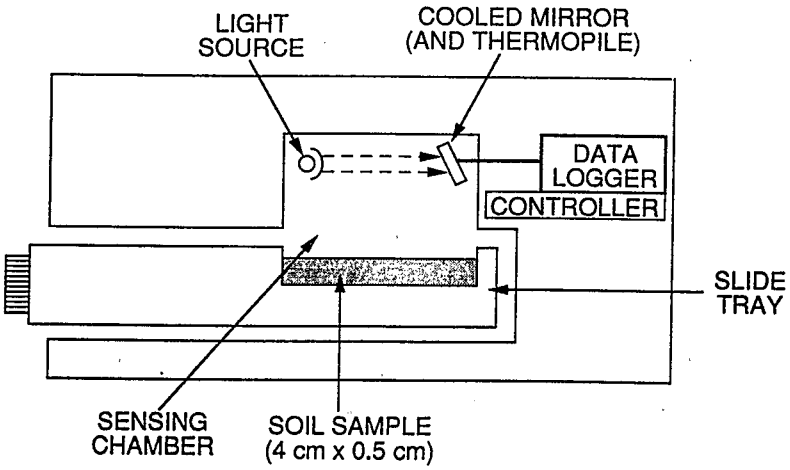

Figure 6.1.7 Schematic of a water activity (relative humidity) meter (Gee et al., 1992, by permission).

6. VADOSE ZONE HYDROLOGIC PROPERTIES (I): WATER STATE

6.2 VADOSE ZONE MOISTURE CONTENT

6.2.1 Gravimetric Methods

Other Names Used to Describe Method: Oven-drying method, carbide/gas pressure method.

Uses at Contaminated Sites: Measurement of soil moisture content.

Method Description: **Oven-dry method:** The mass of a sample collected in the field is weighed before and after oven drying, typically at 105°C, the difference being the water content. Other methods of drying, such as a microwave oven and direct heating using a hotplate, stove, or blowtorch, can be used for more rapid, but less accurate measurements in the field. **Carbide method:** A soil sample of known weight is placed in a container with calcium carbide. The calcium carbide reacts with water, releasing a gas. After completion of the reaction, the gas pressure, registered on a gage, is converted into water content on a dry weight basis. Since all gravimetric moisture measurements require destructive sampling, the careful design of the sample collection sequence is required to measure changes in moisture content over time (Figure 6.2.1). **Other gravimetric methods:** Other techniques of drying and soil moisture extraction include: (1) Centrifugation, (2) pressure plate extraction, and (3) desiccation. Section 9.3.4 further discusses these and other methods of soil water extraction from solids samples.

Method Selection Considerations: **Standard Oven-Dry Method Advantages:** (1) The most accurate available method and serves as the standard method for the calibration of all other moisture determination techniques; (2) is simple; (3) provides a direct measurement of the mass of water. **Standard Oven-Dry Method Disadvantages:** (1) Obtaining representative moisture values in a heterogeneous profile is difficult, requiring a large number of replicate samples for each depth increment; (2) is destructive, requiring removal of samples for laboratory analysis and thus preventing additional measurements at the same sites; (3) expensive if large numbers of samples are required; (4) plotted vertical moisture profiles will not be accurate if water is moving rapidly through the vadose zone, because water distribution profile is changing as samples are being taken; (5) samples from contaminated sites might require special handling if hazardous contaminants are present; (6) not suitable for nongranular media (i.e., fractured rock, carbonates); and (7) sample collection might be difficult in indurated layers, such as fragipans, when soil is very dry (soil difficult to penetrate) or very wet (soil will not remain in sampling tool), and when soils are frozen. **Other Drying Methods Advantages:** Generally faster than standard oven-dry method. **Other Drying Methods Disadvantages:** (1) Might not be as accurate as standard oven-drying; (2) with microwave oven, sample might explode and be lost if power level is too high; and (3) other disadvantages are the same as for oven drying. **Carbide Method Advantages:** (1) Can be used in the field and is more rapid than oven-drying; (2) initial capital investment is lower. **Carbide Method Disadvantages:** (1) Might not be as accurate as standard oven-drying; and (2) other disadvantages are same as for oven drying.

Frequency of Use: Widely used. The ASTM oven-dry method is the standard by which the accuracy of other moisture measurement methods are evaluated.

Standard Methods/Guidelines: Gardner (1986); **Standard oven-dry method:** ASTM (1990); **Microwave oven method:** ASTM (1987); **Direct heating method:** ASTM (1989a); **Carbide method:** ASTM (1989b).

Sources for Additional Information: Everett et al. (1983), Morrison (1983), Thompson et al. (1989), Wilson (1981). See also, Table 6-2.

1	2	3	4
3	4	1	2
1	2	3	4
3	4	1	2

I

1	2	3	4	5
4	5	1	2	3
2	3	4	5	1
5	1	2	3	4
3	4	5	1	2

II

1	2	3	4	5	6
4	5	6	1	2	3
6	1	2	3	4	5
3	4	5	6	1	2
5	6	1	2	3	4
2	3	4	5	6	1

III

(a)

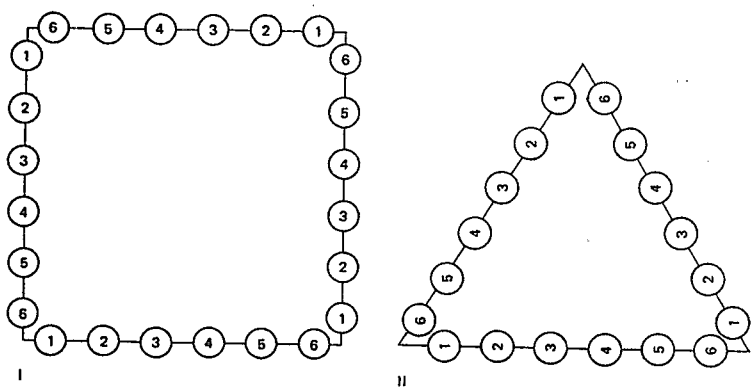

(b)

Figure 6.2.1 Arrangement of boreholes for gravimetric soil-moisture sampling: (a) Rectangular microplots; (b) along perimeters of polygons (Brown et al., 1983)

6.2 VADOSE ZONE MOISTURE CONTENT

6.2.2 Nuclear Methods

Other Names Used to Describe Method: Neutron probe, gamma transmission/double-tube gamma method.

Uses at Contaminated Sites: Measuring and monitoring of changes in soil moisture content.

Method Description: The **neutron** method, which measures moisture content based on the interaction between neutrons and hydrogen atoms in water molecules, is discussed in Section 3.3.3, and the **gamma-gamma** method for measuring soil moisture is discussed in Section 3.3.2. Soil moisture using the neutron method can be measured using either a **surface neutron probe** (Figure 6.2.2a) or a **depth probe** (see Figure 3.3.3). Near-surface soil moisture measurements usually involve the **gamma-transmission** method, in which a gamma photon source and detectors are lowered simultaneously down two parallel boreholes (Figure 6.2.2b). In boreholes, the **gamma-scattering** method is used (see Figure 3.3.2).

Method Selection Considerations: **Neutron probe:** See Section 3.3.3; **Double-tube gamma method:** See Section 3.3.2.

Frequency of Use: Neutron probes are commonly used for monitoring of soil moisture in the near surface. The double-tube gamma method is less common.

Standard Methods/Guidelines: **Neutron probe:** ASTM (1988, 1992a), Gardner (1986).

Sources for Additional Information: Table 3-4 in Section 3 provides an index of over 100 references on the neutron method and around 40 references on gamma-gamma logging methods.

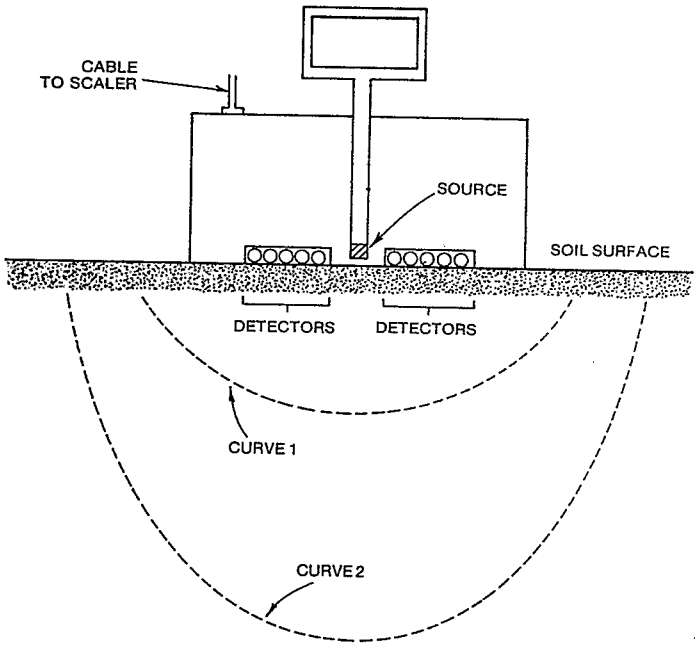

(a)

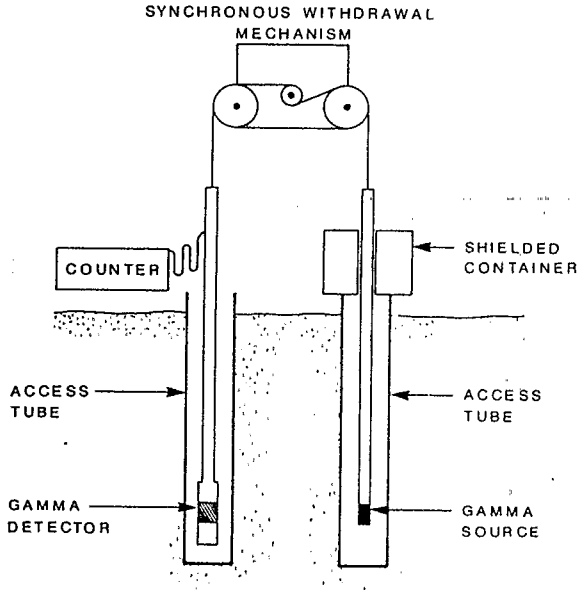

(b)

Figure 6.2.2 **Nuclear methods for soil moisture measurement: (a) Cross-section of surface neutron probe (Morrison, 1983, after DeVries and King, 1961, by permission); (b) Double-tube gamma method for soil moisture content determination (Rehm et al., 1985, Copyright © 1985, Electric Power Research Institute, EPRI EA-4301, *Field Measurement Methods for Hydrogeologic Investigations: A Critical Review of the Literature*, reprinted with permission).**

6.2 VADOSE ZONE MOISTURE CONTENT

6.2.3 Dielectric Sensors

Other Names Used to Describe Method: Radio frequency/microwave techniques, capacitance techniques, capacitive sensors, 'fringe' capacitance, resonance capacitance, in situ permittivity meter.

Uses at Contaminated Sites: Measuring soil moisture content.*

Method Description: Basic principles are similar to the induced polarization surface geophysical method (see Section 1.2.3 for discussion of frequency domain and time domain IP methods), except that sensors are placed below the ground surface. A variety of capacitive sensors (Figure 6.2.3a,b) have been developed that measure the dielectric properties of soil, which are primarily related to water content. These sensors depend upon specific electrode configurations and detailed calibration. **Dielectric probes,** which measure vertical soil moisture profiles in a cased holed similar to neutron probes (Section 3.3.3), are a relatively recent development. Dielectric probes have significant advantages over neutron probes and other nuclear methods for measuring soil moisture (see below).

Method Selection Considerations: **Sensor Advantages:** (1) With accurate calibration, can provide accurate values for soil moisture; (2) can be placed at any depth for obtaining moisture profile data; (3) a wide variety of sensor configurations, from very small to large, are possible, allowing some control over the sensor volume of influence; and (4) capacitive sensors have high precision and the property they measure (dielectric constant) is primarily related to water content. **Sensor Disadvantages:** (1) The moisture sensor must be implanted properly to minimize disturbance to the soil; (2) long-term reliability and maintenance of the calibration is uncertain, especially if the ionic concentration of the soil water changes; and (3) cost of readout devices and interfaces with remote collection platforms is high. **Probe Advantages:** (1) Provide better resolution in measuring vertical soil moisture profiles than neutron probes; (2) are less expensive than neutron probes and time domain reflectometry sensors; (3) are as accurate as neutron probes without having to deal with radioactive materials; and (4) can be used to accurately determine position of a wetting front and ground-water level in soil. **Probe Disadvantages:** (1) Special care is required to make sure that there are no air gaps outside the access tube, because relatively limited radial penetration gives more weight to measurements near the borehole compared to neutron probe; (2) less sensitive at high moisture contents than low moisture contents; and (3) air-soil interface affects accuracy of measurements of in the upper 20 to 50 centimeters of soil.

Frequency of Use: Numerous prototypes have been developed. Relatively recent development of commercially available units means that this method is likely to be used more commonly in the future.

Standard Methods/Guidelines: --

Sources for Additional Information: Morrison (1983), Schmugge et al. (1980). See also, Table 6-2.

*Capacitance sensors are classified here as moisture sensors because they are most commonly calibrated to measure soil moisture. They could just as easily be classified as a matric potential measurement technique because they operate by moisture moving into the sensor in response to the matric potential gradient.

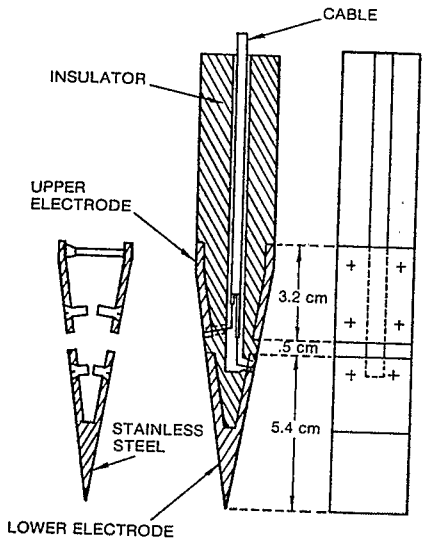

(a)

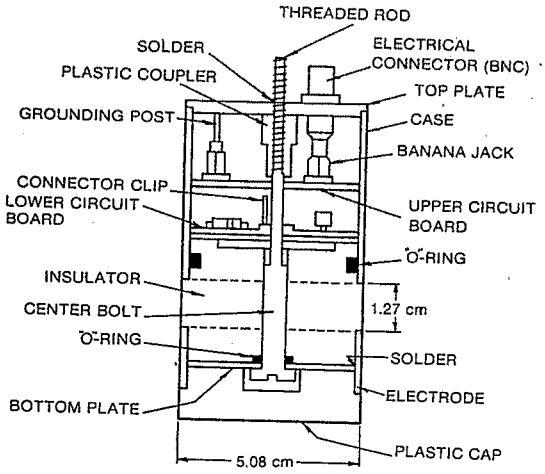

(b)

Figure 6.2.3 **Capacitance sensors: (a) Capacitance probe (Morrison, 1983, after Thomas, 1966, by permission); (b) Cylindrical sensor (Morrison, 1983, after Wobschall, 1978, by permission).**

6.2.4 Time Domain Reflectometry

Other Names Used to Describe Method: --

Uses at Contaminated Sites: Measuring soil moisture content; estimating soil bulk electrical conductivity.

Method Description: Use of **time domain reflectometry** to measure soil moisture content is a relatively recent development that shows great promise for field applications. Volumetric water content can be determined based on measuring the travel time and the attenuation of the amplitude of an electromagnetic pulse launched along one or more transmission lines (coaxial, two-, three-, or four-rod probes) embedded in the soil. Portable probes can be used to make multiple near-surface measurements or in situ probes of varying length can be installed vertically to different depths, or horizontally at different depths in the side of a trench (Figure 6.2.4). The TDR trace can be recorded either on a photograph of the oscilloscope display or on an X-Y recorder. The measured dielectric constant is converted to volumetric water content using an empirically derived equation that can be applied to many soils. Electrical conductivity also can be estimated from the attenuation of the signal (Section 9.1.4).

Method Selection Considerations: **Advantages:** (1) With accurate calibration, can provide accurate values for soil moisture; (2) can be placed at any depth for obtaining moisture profile data; (3) a wide variety of sensor configurations, from very small to large, are possible, allowing some control over the sensor volume of influence; (4) readily amenable for use with automatic data acquisition systems; and (5) available from several commercial sources. **Disadvantages:** (1) The moisture sensor must be implanted properly to minimize disturbance to the soil; (2) long-term reliability and maintenance of the calibration is uncertain, especially if the ionic concentration of the soil water changes; and (3) cost of readout devices and interfaces with remote collection platforms is high.

Frequency of Use: Relatively new method with good potential for field applications.

Standard Methods/Guidelines: --

Sources for Additional Information: See Table 6-2.

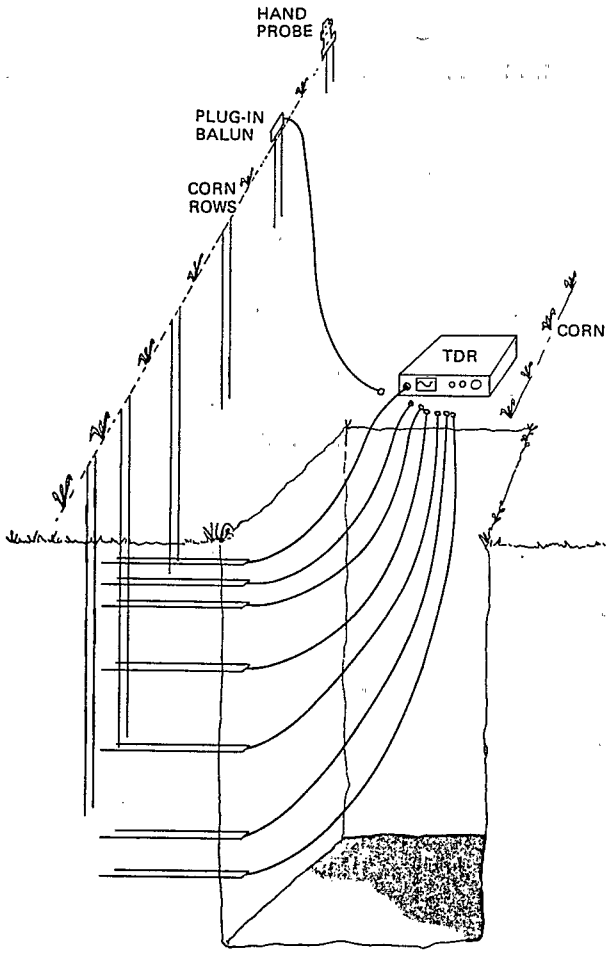

Figure 6.2.4 **Diagram of vertical and horizontal TDR probe installations for soil moisture monitoring at different depths (Topp and Davis, 1985a, by permission).**

6.2.5 Nuclear Magnetic Resonance (NMR)

Other Names Used to Describe Method: Nuclear-magnetic logging.

Uses at Contaminated Sites: Measuring porosity, permeability, moisture content, pore-size distribution, available water.

Method Description: A magnetic field is induced using a pulsed, direct current, polarizing field to align a fraction of the nuclei of hydrogen atoms (protons). When the polarizing field is shut off, the probe records the precession of the protons into the Earth's magnetic field. The proton relaxation time is short for fluids in solids or bound to a surface, but is much longer for fluids free to move in pore spaces. Figure 6.2.5a shows components of a pulsed nuclear magnetic resonance sensor and Figure 6.2.5b shows a prototype unit for in situ measurements of soil moisture. Installation involves digging a test pit to the desired depth, driving a thin-walled plastic tube into the bottom, and excavating around the tube to a depth of about 4 centimeters. The sensor is slipped over the tube and seated firmly and the excavation is backfilled with a coaxial cable running to the surface, which is plugged into the instrumentation for inducing the magnetic field and measuring the response when it shut off.

Method Selection Considerations: **Advantages:** (1) More precise characterization of free and bound water and porosity than other logging methods; and (2) prototype units for in situ measurement of soil moisture have been developed. **Disadvantages:** (1) Use limited to large boreholes (generally >7 inches) filled with drilling mud (magnetite powder usually has to be added to the mud to eliminate the borehole contribution to the log); (2) installation procedures are relatively complex for in situ units; and (3) equipment availability might be a problem.

Frequency of Use: Not widely used for petroleum applications and relatively unknown for ground-water applications. Potentially very useful if borehole conditions are appropriate.

Standard Methods/Guidelines: --

Sources for Additional Information: **NMR general:** Abragam (1961), Schlichter (1963), see also, Section 10.6.3; **Borehole applications:** See Section 3.2.4; **Soil moisture applications:** Morrison (1983), and references indexed in Table 6-2.

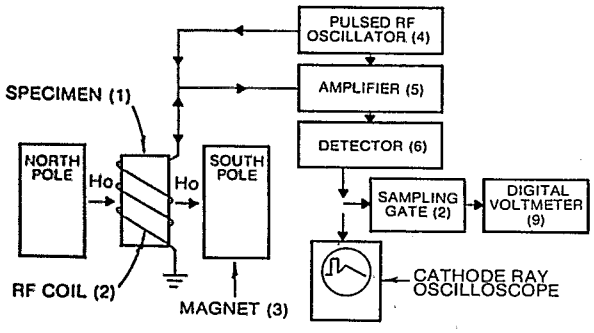

(a)

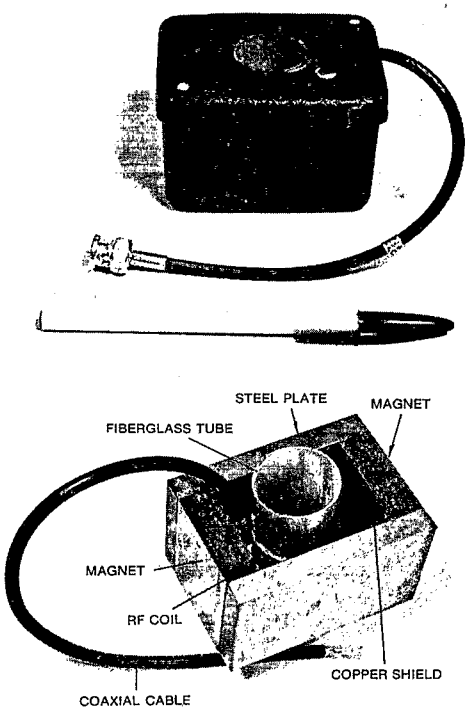

(b)

Figure 6.2.5 **Nuclear magnetic resonance: (a) Components of a pulsed nuclear magnetic resonance sensor and associated instrumentation; (b) Prototype in situ nuclear magnetic resonance sensor (Morrison, 1983, after Matzkanin and Gardner, 1974, by permission).**

6.2 VADOSE ZONE MOISTURE CONTENT

6.2.6 Electro-Optical Sensors

Other Names Used to Describe Method: Electro-optical switch sensor, CdS photoresistor sensor.

Uses at Contaminated Sites: In situ monitoring of soil water content and/or matric potential.

Method Description: Several types of electro-optical sensors have been developed that can use changes in the optical properties of different materials at different moisture contents to measure soil moisture and/or matric potential. The **electro-optical switch** sensor involves placement of a nylon filter disk in the gap of an electro-optical switch. (Figure 6.2.6a). An infrared light emitting diode (IR LED) sends a signal that passes through the filter disc and is sensed by a photo diode. The sensor is calibrated by measuring the response in the soil at known moisture content and/or matric potentials. A second type of sensor involves the placement of porous glass or nylon disks of different pore-size grades between a CdS photoresistor cell and light emitting diode (Figure 6.2.6b). The use of different pore-size disks allows continuous measurement of electrical response over a wide range of moisture contents. Calibration procedures are similar to those for the electro-optical switch sensor.

Method Selection Considerations: **Advantages:** (1) Potential for low cost and high physical stability and reliability; (2) can be calibrated to measure both moisture content and water potential over a wide range of moisture contents and matric potentials (electro-optical switches are better than CdS photoresistors for direct measurement of matric potential); and (3) electronic circuitry allows automatic data acquisition and analysis. **Disadvantages:** (1) New technique with limited operational and field experience; (2) equipment is not yet readily available (although both types of devices can be readily made using off-the-shelf materials); and (3) separate calibrations might be required for changes in soil texture.

Frequency of Use: New technique with potential for widespread use.

Standard Methods/Guidelines: --

Sources for Additional Information: Alessia and Prunty (1986), Cary et al. (1989, 1991)

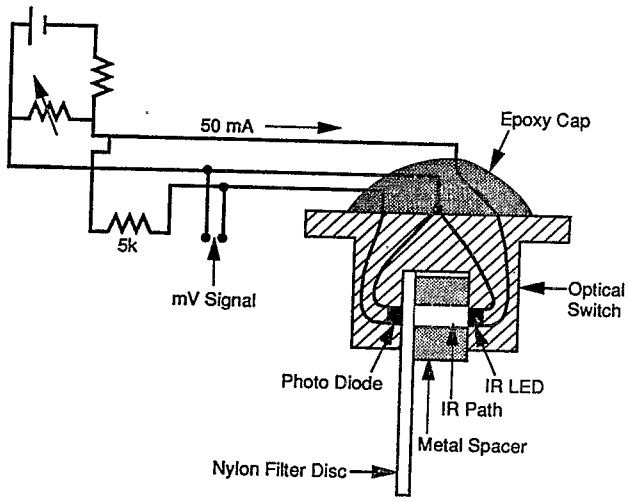

(a)

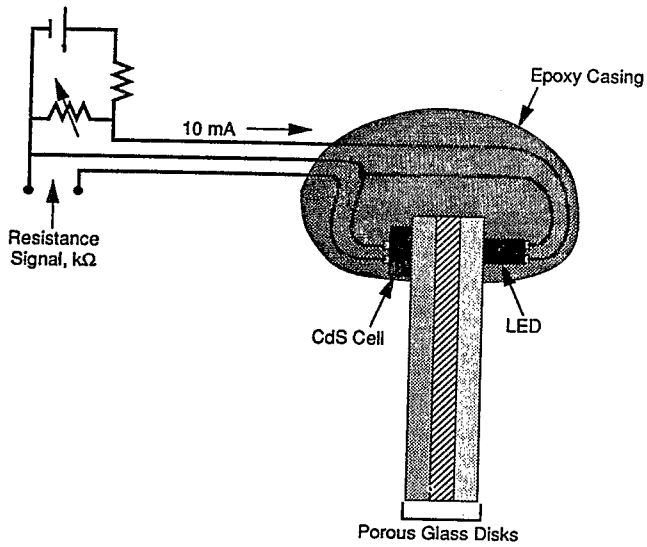

(b)

Figure 6.2.6 **Diagrams of two electro-optical soil-water sensors: (a) Electro-optical switch with nylon disk using infrared-light transmission; (b) CdS cell (photoresistor) with layered fritted glass using visible-light transmission (Cary et al., 1991, by permission).**

6.2.7 Computerized Axial Tomography (CAT)

Other Names Used to Describe Method: Computer assisted tomography, CAT scanning, x-ray computed (computer) tomography, computed tomographic scanning, CT scanning, x-ray CT, gamma-ray attenuation CAT, nuclear tomography.

Uses at Contaminated Sites: Potential for measuring spatial distribution of soil moisture, bulk density, and soil macroporosity; detecting roots, seeds, insects.

Method Description: CAT scanning systems can use single or multiple sources of gamma radiation or x-rays. Detectors can be on the same probe as the source, or placed in adjacent boreholes. The detectors measure the attenuated signal, and counts in the desired energy ranges are discriminated by a single channel analyzer. Signals are processed using tomographic theory (see also, Section 3.4.5) to allow three dimensional analysis of variations of the parameter of interest. Figure 6.2.7 illustrates the operation of a CT scanner used for scanning soil cores in the laboratory.

Method Selection Considerations: Relatively new method, which has shown promising results in laboratory studies, but has not yet been tested for field applications.

Frequency of Use: Usefulness in the field not yet demonstrated.

Standard Methods/Guidelines: ASTM (1991b).

Sources for Additional Information: Anderson et al. (1988), Phogat et al. (1991).

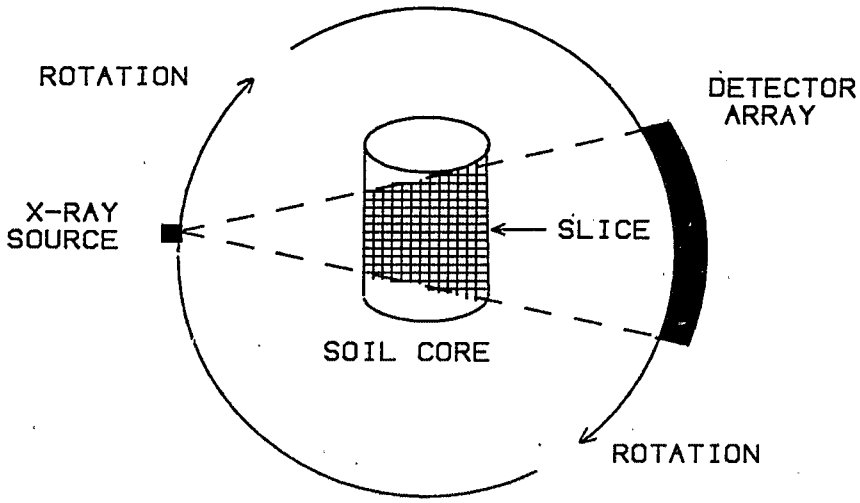

Figure 6.2.7 Schematic of how a CT scanner measures the attenuated x-ray beams passing through a detection aperture containing a soil core. The x-ray source and detector array rotate clockwise around the detection zone (Anderson et al., 1988, by permission).

6.3 OTHER SOIL HYDROLOGIC PROPERTIES

6.3.1 Soil Moisture-Potential-Conductivity Relationships

Other Names Used to Describe Method: Moisture characteristics curves: Water retention function, specific retention, water content-matric potential relationship, capillary pressure-saturation curve, capillary-moisture relationship.

Uses at Contaminated Sites: Estimating water content from soil water potential measurements; estimating soil water potential from soil moisture measurements; estimating hydraulic conductivity from soil water potential or soil moisture measurements; modeling of contaminant flow in the vadose zone.

Method Description: Soil moisture (usually represented by the symbol "θ"), soil matric potential (usually represented with the symbol "ϕ"), and soil hydraulic conductivity are all intimately related. Once the relationship between two of these properties have been established for a soil horizon, then measurement of one parameter allows calculation of the other parameters. The **soil moisture characteristic curve** (see above for other terms used to describe this relationship) is a commonly used relationship to define soil hydrologic properties. An important property of this relationship is that it is subject to **hysteresis** (i.e., the relationship is different depending on whether the soil is wetting or drying). Figure 6.3.1a shows the moisture characteristic curve for a sandy soil and illustrates the effect of hysteresis. In the field, the moisture characteristic curve is determined by monitoring soil water content (using methods described in Section 6.2) and soil water potential (using methods described in Section 6.1) during the wetting or drying cycle of a soil. Jury et al. (1978) provide an example of developing a moisture characteristic curve in the field using tensiometers and neutron-probe measurements. Shani et al. (1987) describe a reliable and quick method for estimating this relationship in the field using a dripper method (Section 7.2.5). In a similar manner, $K(\theta)$ (hydraulic conductivity as a function of moisture content) and $K(\phi)$ (hydraulic conductivity as a function of soil-water potential [pressure head]) can be measured. These relationships also are subject to hysteresis as shown in Figure 6.3.1b. **Estimation from other soil properties:** The hydrologic properties of soils are strongly related to physical properties, such as particle-size distribution, porosity, and bulk density. Empirical relationships between physical and hydrologic properties can be used to estimate soil moisture-potential relationships based on measurement of physical properties, provided that the soils are similar to the soils from which the empirical relationships have been derived. Section 7.2.8 provides additional information on estimation of unsaturated hydraulic conductivity using physically and empirically-based equations and relationships, many of which can be related to moisture characteristic curves. Mualem and Friedman (1991) have developed an equation that relates soil electrical conductivity (from saturation extract--see Section 9.3.5) to water content, which can be used to estimate soil water content of samples for a wide range of coarse and stable structured soils when no other data are available. Reference index Table 9-3 (EC-Salinity Calibrations), identifies other references that discuss the relationship between moisture content and electrical conductivity. The moisture characteristic also can be estimated from sorptivity measurements (Section 6.3.2).

Method Selection Considerations: The soil moisture-potential relationship is required input for many vadose hydrologic models. **Field measurement** of moisture characteristic curves using conventional methods is complicated and time-consuming, although the recently developed dripper method (Section 7.2.5) now provides a simpler and more rapid alternative for field measurement. **Laboratory measurements** using undisturbed core samples are simpler, but a large number of cores might be required to adequately characterize spatial variability. **Empirical relationships** based on other soil physical properties are the simplest and least expensive method, but probably are the least accurate method unless soil physical properties are very similar to the soils from which the empirical relationships were derived.

Frequency of Use: Field measurement is uncommon. Usually measured in the laboratory or estimated using empirical relationships.

Standard Methods/Guidelines: **Field:** Bruce and Luxmore (1986), Shani et al. (1987); **Laboratory:** ASTM (1968), Klute (1986); **Empirical equations/relationships:** See Table 6-3.

Sources for Additional Information: See Table 6-3.

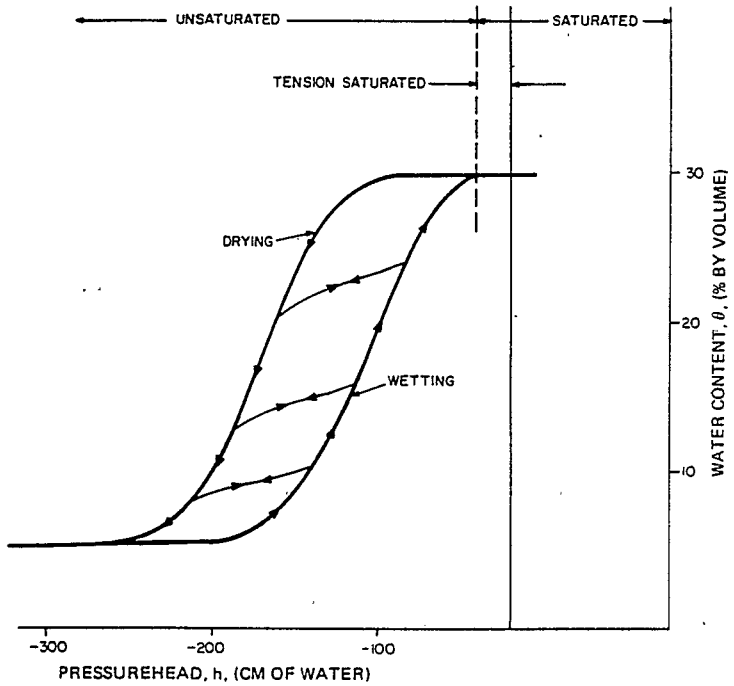

(a)

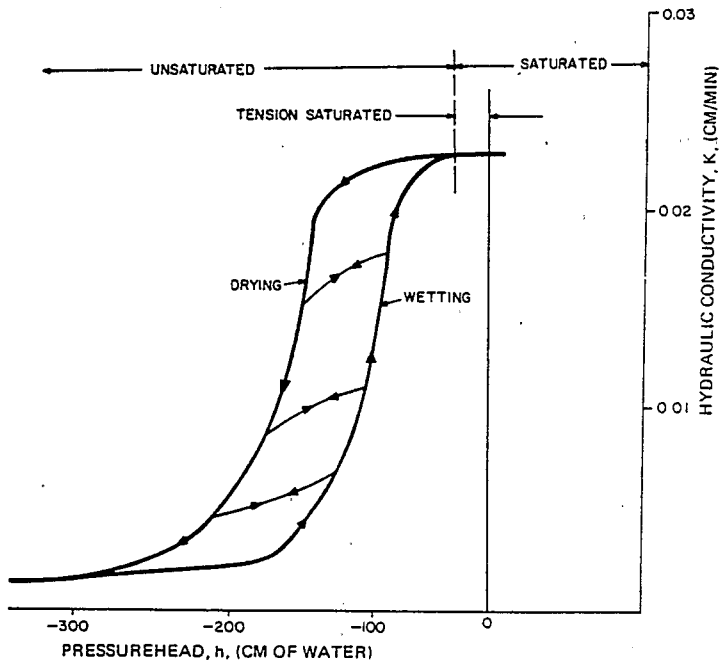

(b)

Figure 6.3.1 **Relationships between soil moisture, matric potential, and hydraulic conductivity: (a) Moisture characteristic curves for a sandy soil during wetting and drying; (b) K-matric potential curves showing effect of hysteresis during wetting and drying (Everett et al. 1983, after Freeze and Cherry, 1979).**

6.3 OTHER SOIL HYDROLOGIC PROPERTIES

6.3.2 Water Sorptivity and Diffusivity

Other Names Used to Describe Method: --

Uses at Contaminated Sites: **Sorptivity:** Estimating diffusivity-moisture relationship, moisture characteristic curve, and hydraulic conductivity as a function of matric potential; estimating soil water distribution. **Diffusivity:** Characterizing soil transmission/storage properties; calculating infiltration (some equations).

Method Description: **Soil diffusivity** is a single parameter of unsaturated soil that relates the hydraulic conductivity and water storage properties of a soil and can be calculated as either a function of changes in soil water potential or water content. Hydraulic diffusivity can be an important parameter in infiltration equations (Section 7.1.4). **Sorptivity** is a measure of the capacity of a porous medium to absorb a wetting liquid. The greater the value, the larger the volume of water that can be absorbed, and the more rapidly it will be absorbed. Sorptivity decreases from a maximum value (dependent on the soil physical properties) to zero as water content/matric potential increase to the point of saturation. Sorptivity is closely related to hydraulic conductivity and soil water diffusivity, and is sometimes used to calculate diffusivity. **Field Measurement of Diffusivity:** Any field method for measuring unsaturated hydraulic conductivity as a function of matric potential, which measures changes in water content with time and changes in matric potential with time, can be used to determine diffusivity (see Table 7-1). **Field measurement of sorptivity:** Green et al. (1986) describe two methods for measurement of sorptivity: (1) **Ponded infiltration:** A single- or double-ring infiltrometer (see Section 7.3.1) is filled with water and cumulative infiltration is measured as the head of ponded water falls with time; (2) **Constant-head porous Plate:** Similar to ponded infiltration method, except that a constant-head device delivers water to the soil through a porous plate in contact with the soil. This process results in a slight negative pressure at the bottom of the porous plate, preventing water from entering large pores or cracks. The second method is a variant of the **tension infiltrometer** (see Section 7.2.3). Table 7-1 identifies other methods for measuring saturated and unsaturated hydraulic conductivity, which also can be used to measure sorptivity.

Method Selection Considerations: **Sorptivity:** The ponded infiltration method is simple and rapid, but works only when there is negligible flow of water through large cracks or channels. The constant-head porous plate method also is simple, rapid and reliable, and should be used any time flow through large pores is a concern. See also, appropriate subsections in Section 7, as identified in Table 7-1.

Frequency of Use: Relatively uncommon in routine field applications.

Standard Methods/Guidelines: Green et al. (1986).

Sources for Additional Information: See Table 6-3 and additional references identified under tension infiltrometers in reference index Table 7-3.

6.3 OTHER SOIL HYDROLOGIC PROPERTIES

6.3.3 Available Water Capacity

Other Names Used to Describe Method: Field capacity, water holding capacity.

Uses at Contaminated Sites: Evaluating water storage in the rooting zone and the movement of contaminants from the rooting to the vadose zone in response to precipitation events.

Method Description: Available water capacity is the difference between **field capacity** (the amount of water remaining in a soil 2 or 3 days after having been wetted and after free drainage is negligible) and water held in the soil at the **permanent wilting point**, PWP (the point at which plants generally are unable to extract additional water from the soil--around 15 bars suction = -1,500 kPa). This represents the amount of water that is available to plants for growth. The field procedure involves wetting soil test plots and measuring water content using one of the methods identified in Table 6-1 (gravimetric, neutron, or gamma-gamma are the most commonly used) when the soil is at field capacity at different depth increments. Alternatively, natural changes in soil moisture can be monitored over an extended period of time. Figure 6.3.3a shows that this approach can result in a range rather than an exact percentage for field capacity. Determination of the PWP requires laboratory tests using the Sunflower method, in which water is withheld from a dwarf sunflower growing in a sample of the depth horizon of interest until it wilts, at which time the soil water content is determined. Alternatively, PWP can be approximated using a pressure plate apparatus to withdraw water from a sample of the depth increment of interest until matric potential is -15 bars, at which time water content is measured. Figure 6.3.3b show several ways in which the resulting data can be plotted, and illustrates the difference that rooting depth of plants present in a soil can make in the amount of water that is likely to be removed from the soil by evapotranspiration. Available water capacity also can be estimated from a moisture characteristic curve (Figure 6.3.1), and from soil texture (Figure 6.3.3c). The particle-size ranges of the texture classes shown in Figure 6.3.3c are shown in Figure 2.5.1.

Method Selection Considerations: There is no good alternative to the procedure described above for accurate measurement of in situ field capacity, although approximations using laboratory analysis of undisturbed soil cores or centrifugation of disturbed soil samples can be obtained.

Frequency of Use: Uncommon.

Standard Methods/Guidelines: Cassel and Nielsen (1986).

Sources for Additional Information: Richards (1965).

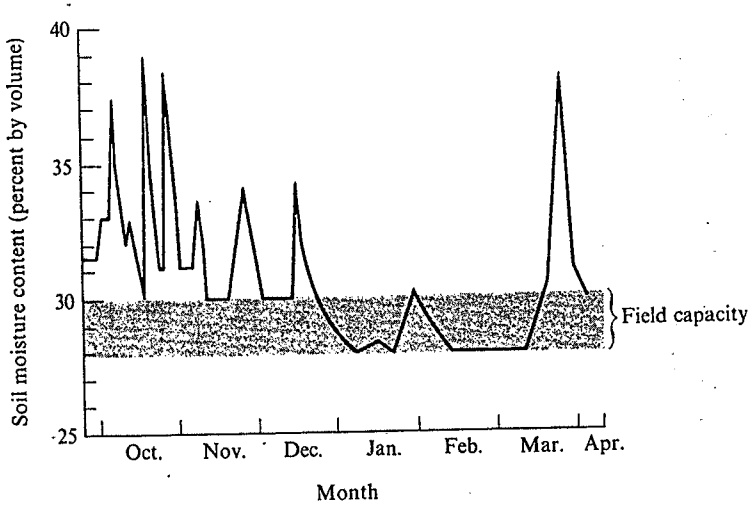

(a)

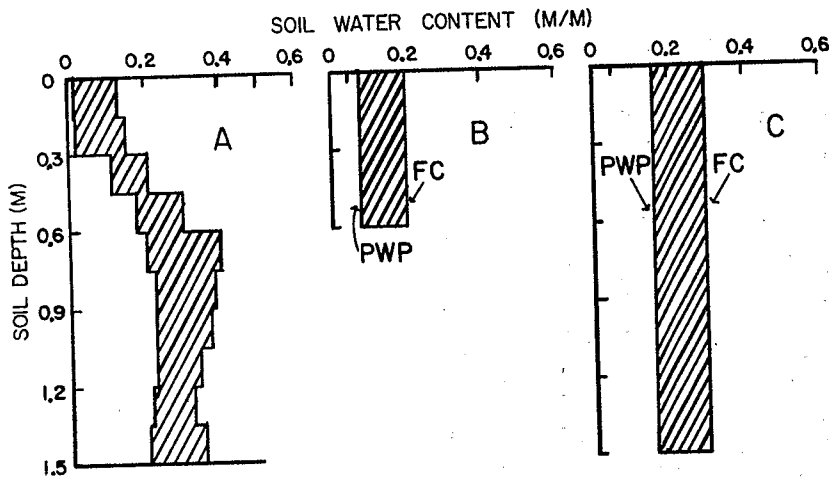

(b)

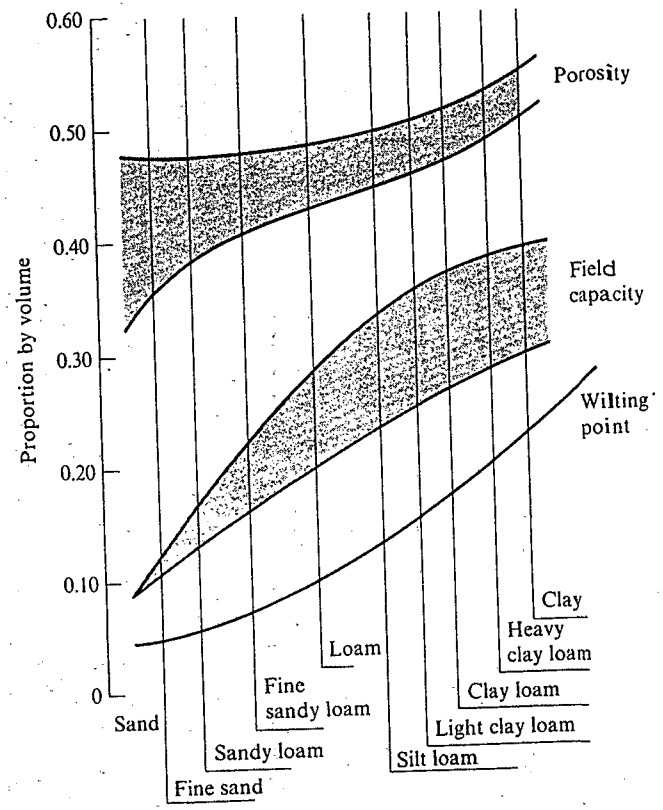

(c)

Figure 6.3.3 Available water capacity: (a) Estimation of field capacity (28 to 30 percent) by repeated measurement of soil moisture in situ (Dunne and Leopold, 1978, From: *Water in Environmental Planning* by Dunne and Leopold, Copyright © 1978 by W.H. Freeman and Company, reprinted with permission), (b) Upper and lower limits of available water: (A) Measured in 0.15-meter increments, (B) limits expressed for this profile for a 0.6-meter rooting depth, (C) and for a 1.5-meter rooting depth; FC = field capacity, PWP = permanent wilting point (Cassel and Nielsen, 1986, by permission); (c) Chart for estimating field capacity and available water capacity based on soil texture (Dunne and Leopold, 1978, From: *Water in Environmental Planning* by Dunne and Leopold, Copyright © 1978 by W.H. Freeman and Company, reprinted with permission).

Table 6-2 Reference Index for Vadose Zone Soil Water Potential/Moisture Measurement and Monitoring Methods

Topic	References
Soil Water (Matric) Potential	
General	Hendrickx et al. (1990-variability), Wilkinson and Klute (1962-temperature effects); Reviews: Bouyoucos (1960), Brakensiek et al. (1979), Mullins (1991), Richards (1949)
Porous Cup Tensiometers	Colman et al. (1946), Cummings and Chandler (1940), Dennehy and McMahon (1989), Hendrickx and Nieber (1985), Huber and Dirksen (1978), Hunter and Kelley (1946), McKim et al. (1980b), Miller (1951), Oaksford (1978-manometer), Perrier and Evans (1961), Rehm et al. (1987), Richards (1942), Richards and Gardner (1936), Richards and Neal (1937), Richards et al. (1938, 1973), Rogers (1935), Savvides et al. (1977-mercury), Thomas and Phillips (1991), Towner (1980), Wendt et al. (1978); Reviews: Cassel and Klute (1986), Hendrickx (1990), Richards (1949), Schmugge et al. (1980), Stannard (1986, 1990); Transducer type: Anderson and Burt (1977), Bianchi (1962), Burt (1978), Elzeftawy and Mansell (1975), Enfield and Gillaspy (1980), Fitzsimmons and Young (1972), Gillham et al. (1976), Klute and Peters (1962), Leonard and Low (1962), Long (1982), Long and Huck (1980), Marthaler et al. (1983), Rice (1969), Thiel et al. (1963), Thony and Vachaud (1980), Watson (1965, 1967), Watson and Jackson (1967-temperature effects), Williams (1978); Recording Tensiometers/Automatic Data Acquisition: Anderson and Burt (1977), Bianchi and Tovey (1968), Burt (1978), Enfield and Gillaspy (1980), Long and Huck (1980), Lowery et al. (1986), Nyhan and Drennon (1990), Rice (1969), Walkotten (1972), Williams (1978); Moisture Measurement: Cummings and Chandler (1940), McKim et al. (1980b), Troolen et al. (1986); Snowpack: Colbeck (1976), Wankiewicz (1978); Wick Tensiometer: Gee and Campbell (1991)
Thermocouple Psychrometers	Review: Savage and Cass (1984); Papers: Barrs and Slaytor (1965), Box (1965), Brown (1970), Brown and Collins (1980), Brown and Johnson (1976), Campbell (1972, 1979), Campbell et al. (1968), Chow and deVries (1973), Dalton and Rawlins (1968), Daniel (1979), Daniel et al. (1981), Enfield and Hsieh (1972), Enfield et al. (1973), Hoffman et al. (1969, 1972), Hsieh and Hungate (1970), Hsieh et al. (1972), Ingvalson et al. (1970), Jones et al. (1990), Koorevar and Janse (1972), Korven and Taylor (1959), Lambert and van Schilfgaarde (1965), Lang and Trickett (1965), Lopushinsky (1971), Lopushinsky and Klock (1971), Madsen et al. (1986), Meeuwig (1972), Merril and Rawlins (1972), Merril et al. (1968), Meyn and White (1972), Monteith and Owen (1958), Moore and Caldwell (1972), Peck (1968), Rawlins (1966), Rawlins and Dalton (1967), Richards (1949), Richards and Caldwell (1987), Richards and Ogata (1958), Roundy (1984), Spanner (1951), Van Heveren (1972-humidity in snow), Van Heveren and Brown (1972), Wiebe et al. (1971, 1977), Zanstra (1976), Zollinger et al. (1966); Texts: Brown and Van Heveren (1972), Campbell (1977), Fritschen and Gay (1979); Measurement Interpretation: Campbell and Gardner (1971), Lang (1967); Calibration: Brown and Collins (1980); Water Activity Meter: Gee et al. (1992)
Resistance Sensors	Anderson and Edlefsen (1942), Atchison and Butler (1951), Becker et al. (1946), Bourget et al. (1958), Bouyoucos (1949, 1953, 1954), Bouyoucos and Mick (1940, 1947, 1948), Colman and Hendrix (1949), Croney et al. (1951), Cummings and Chandler (1940), Daniel et al. (1992), Dennehy and McMahon (1989), El-Samie and Marsh (1955), Haise and Kelley (1946), Hancox and Walker (1966), Kemper and Amemiya (1958), Michelson and Lord (1962), Pereira (1951), Perrier and Marsh (1958), Rehm et al. (1987), Richards and Weaver (1943), Salaruddin and Khasbardar (1967), Schlub and Maine (1979), Slater (1942), Tanner and Hanks (1952), Williams (1980); Automatic Data Acquisition: Armstong et al. (1985); Calibration: Atchison and Butler (1951), Kelley (1944), Shaw and Baver (1939a); Moisture Measurement: Cummings and Chandler (1940)

Table 6-2 (cont.)

Topic	References
Soil Water (Matric) Potential (cont.)	
Electrothermal Methods	Aldous and Lawton (1952), Beck et al. (1971), Blackwell (1954, 1956), Bloodworth and Page (1957), Bloomer and Ward (1979), Cummings and Chandler (1940), Daniel et al. (1992), DeVries (1952, 1953), DeVries and Peck (1958a,b), Fritton et al. (1974), Fuchs and Hada (1973), Fuchs and Tanner (1968), Gardner et al. (1991), Hooper (1952), Hooper and Leeper (1950), Jaeger (1958), Kubo (1953), Momin (1945), Phene et al. (1971a, 1971b, 1973), Philip (1961), Shaw and Baver (1939a,b), Slusarchuk and Fougler (1973), Sophocleous (1979), Van Duin and DeVries (1954), Wechsler et al. (1965); Calibration: Kelley (1944), Overgaard (1970), Shaw and Baver (1939a); Moisture Measurement: Cummings and Chandler (1940)
Soil Moisture Content	
General	Hendrickx et al. (1990-variability), Reinhart (1961-physical factors), Yates and Warrick (1987-estimation with cokriging); Reviews: Bouyoucos (1952), Johnson (1962), McKim et al. (1980a), Postlethwaite and Trickett (1956), Schmugge et al. (1980), Taylor (1955), Wilson (1971)
Gravimetric	Hawley et al. (1982), Hendrickx (1990), McKim et al. (1980b), Rehm et al. (1987), Reynolds (1970a,b,c)
Time Domain Reflectometry	Ansoult et al. (1985), Baker and Allmaras (1990), Baker and Lascano (1989), Brisco et al. (1992), Chudobiak et al. (1979), Cole (1977), Dalton (1989), Dalton and van Genucthen (1986), Dalton et al. (1984), Dasberg and Dalton (1985), Dasberg and Hopmans (1992-calibration), Davis and Annan (1977), Davis and Chudobiak (1975), Elrick et al. (1992), Fellner-Feldegg (1969, 1972), Heimovaara et al. (1988), Hokett et al. (1992), Hook et al. (1992), Kachonoski et al. (1990, 1992), Nadler (1991), Nadler et al. (1991), Patterson and Smith (1981), Redman et al. (1991), Reeves and Elgezawi (1992), Smith and Tice (1988), Stein and Kane (1983), Tektronix (1987), Topp and Davis (1981, 1985a,b), Topp et al. (1980a,b, 1982a,b, 1984, 1988), Van Loon et al. (1990-electrical conductivity), Yanuka et al. (1988), Zegelin et al. (1989); NAPL Detection: Brewster et al. (1992); Leak Detection: Davis et al. (1984)
Dielectric Sensors	Bell et al. (1987), Birchak et al. (1974), Brisco et al. (1992), Dean et al. (1987), DePlater (1955), Hancox and Walker (1966), Kuráž (1981), Kuráž and Matousek (1977), Kuráž et al. (1970), Layman (1979), Mack and Brach (1966), Matthews (1963), Matzkanin et al. (1979), McKim et al. (1979, 1980b), Roth (1966), Selig and Mansukhani (1975), Selig et al. (1975), Thomas (1966), Troxler Electronic Laboratories (1992), Walsh et al. (1979), Wobschall (1978); Soil Dielectric Properties: Cihlar and Ulaby (1974), Hipp (1974), Hoekstra and Delaney (1974), Smith-Rose (1933), Wang and Schmugge (1978), see also, references in Section 1.5.1
Nuclear Magnetic Resonance	Soil Moisture: Andreyev and Martens (1960), Matzkanin and Gardner (1974), Prebble and Currie (1970), Rollwitz (1965), Smith and Tice (1988), Tice et al. (1981), Wu (1964); Borehole: See Section 3.2.4

Table 6-3 Reference Index for Measurement and Estimation Soil Hydrologic Properties Other than Hydraulic Conductivity

Topic	References
General Soil-Water Relationships	Bouwer and Jackson (1974), Childs (1969), Day et al. (1967), Gairon and Hadas (1973), Hendrickx (1990), Holmes et al. (1967), Marshall (1960), Nielsen et al. (1972), Reeve and Carter (1991), Richards (1965), Rode (1965), Wiebe et al. (1971)
Soil-Water Retention	Measurement: Madsen et al. (1986), Richards (1965), Su and Brooks (1980); Equations: Bumb et al. (1991), Gillham et al. (1979), McKee and Bumb (1984); see also, Section 7.2.8 and Table 7-5; Estimation from Other Soil Properties: Ahuja et al. (1985), Alessi et el. (1992), Arya and Paris (1981), Bruce (1972), Brust et al. (1968), Carsel and Parrish (1988), Clausnitzer et al. (1992), DeJong (1982), Gregson et al. (1987), Gupta and Larson (1979), Haverkamp and Parlange (1986), Hendrickx (1990), Hendrickx et al. (1991), McQueen and Miller (1974), Mishra and Parker (1990), Mishra et al. (1989), Puckett et al. (1985), Rawls and Brakensiek (1985), Rawls et al. (1982), Rogowski (1971, 1972), Ross et al. (1991), Saxton et al. (1986), Schuh et al. (1988), Topp and Zebchuck (1979), Tyler and Wheatcraft (1989), Vereecken et al. (1992), Williams et al. (1992), Yoshida et al. (1985); Temperature Effects: Haridasan and Jensen (1972), Nimmo and Miller (1986); Hysteresis: Nimmo (1992)
Sorptivity	Bridge and Ross (1985), Brutsaert (1976), Chong (1983), Chong et al. (1982), Clothier and White (1982), Dirksen (1975), Kutilek and Valentova (1986), Parlange (1971, 1975a,b), Philip (1955), Reichardt and Libardi (1974), Reynolds and Elrick (1990), Smiles (1977), Smiles et al. (1981, 1982), Talsma (1969), Topp and Zebchuck (1979), White (1979), White and Perroux (1987, 1989), White et al. (1989)
Diffusivity	Bruce and Klute (1956), Brutsaert (1976, 1979), Cassel et al. (1968), Dirksen (1975), Gardner (1970), Gardner and Mayhugh (1958), Hillel and Gardner (1970), Jackson (1963), Klute (1965, 1972), Miller and Bresler (1977), Parlange (1975a,b), Perroux et al. (1981), Philip (1955), Reichardt et al. (1972), Roberts (1984), Scotter and Clothier (1983), Smiles (1977), Smiles and Harvey (1973), Weeks and Richards (1967)

SECTION 6 REFERENCES

Abragam, A. 1961. The Principles of Nuclear Magnetism. Clarendon Press, Oxford, 599 pp.

Ahuja, L.R., J.W. Naney, and R.D. Williams. 1985. Estimating Soil Water Characteristics from Simpler Properties or Limited Data. Soil Sci. Soc. Am. J. 49:1100-1105.

Aldous, W. and W. Lawton. 1952. The Measurement of Soil Moisture and Temperature by Heat Diffusion Type Moisture Cell. In: Frost Action in Soils, A Symposium, Highway Res. Board Special Rept. No. 2., National Res. Council Publ. 213, Washington, DC, pp. 74-95.

Alessi, R.S. and L. Prunty. 1986. Soil-Water Determinations Using Fiber-Optics. Soil Sci. Soc. Am. J. 50:860-863.

Alessi, S., L. Prunty, and W.M. Schuh. 1992. Infiltration Simulations Among Five Hydraulic Property Models. Soil Sci. Soc. Am. J. 56:675-682. [Soil-water retention]

American Society for Testing and Materials (ASTM). 1968. Standard Test Method for Capillary-Moisture Relationship for Coarse- and Medium-Textured Soils by Porous-Plate Apparatus. D2325-68, (Vol. 4.08), ASTM, Philadelphia, PA.

American Society for Testing and Materials (ASTM). 1987. Standard Test Method for Determination of Water (Moisture) Content of Soil by the Microwave Oven Method. D4643-87, (Vol. 4.08), ASTM, Philadelphia, PA.

American Society for Testing and Materials (ASTM). 1988. Standard Test Method for Water Content of Soil and Rock in Place by Nuclear Methods (Shallow Depth). D3017-88, (Vol. 4.08), ASTM, Philadelphia, PA. [Neutron probe]

American Society for Testing and Materials (ASTM). 1989a. Standard Test Method for Determination of Water (Moisture) Content of Soil by Direct Heating Method. D4959-89, (Vol. 4.08), ASTM, Philadelphia, PA.

American Society for Testing and Materials (ASTM). 1989b. Standard Test Method for Field Determination of Water (Moisture) Content of Soil by the Calcium Carbide Gas Pressure Tester Method. D4944-89, (Vol. 4.08), ASTM, Philadelphia, PA.

American Society for Testing and Materials (ASTM). 1990. Standard Test Method for Laboratory Determination of Water (Moisture) Content of Soil and Rock. D2216-90, (Vol. 4.08), ASTM, Philadelphia, PA. [Gravimetric oven drying]

American Society for Testing and Materials (ASTM). 1991. Standard Guide to Measuring Matric Potential in the Vadose Zone Using Tensiometers. D3404-91, (Vol. 4.08), ASTM, Philadelphia, PA.

American Society for Testing and Materials (ASTM). 1992a. Standard Test Method for Water Content of Soil and Rock In-Place by the Neutron Depth Probe Method. D5220-92, (Vol 4.08), ASTM, Philadelphia, PA.

American Society for Testing and Materials (ASTM). 1992b. Standard Test Method for Measurement of Soil Potential (Suction) Using Filter Paper. D5298-92, (Vol 4.08), ASTM, Philadelphia, PA.

Anderson, M.B. and T.P Burt. 1977. Automatic Monitoring of Soil Moisture Conditions in a Hillslope Spur and Hollow. J. Hydrology 33:27-36.

Anderson, A. and N. Edlefsen. 1942. Laboratory Study of the Response of 2- and 4-Electrode Plaster of Paris Blocks as Soil Moisture Indicators. Soil Science 53:413-428.

Anderson, S.H., C.J. Gantzer, J.M. Boone, and R.J. Tully. 1988. Rapid Nondestructive Bulk Density and Soil-Water Content Determination by Computed Tomography. Soil Sci. Soc. Am. J. 52:35-40.

Andreyev, S. and B. Martens. 1960. Soil Moisture Determination by the Method of Nuclear Magnetic Resonance. Soviet Soil Science (Pochvovedenie) 10:1129-1132.

Ansoult, M., L.W. DeBacker, and M. DeClerq. 1985. Statistical Relationship Between Dielectric Constant and Water Content in Porous Media. Soil Sci. Soc. Am. J. 49:47-50.

Armstrong, C.F., J.T. Ligon, and M.F. McLeod. 1985. Automated System for Detailed Measurement of Soil Water Potential Profiles Using Watermark Brand Sensors. S. Carolina Agric. Exp. Station Tech. Pub. No. 2707, pp 201-206.

Arya, L.M. and J.F. Paris. 1981. A Physicoempirical Model to Predict the Soil Moisture Characteristic from Particle-Size Distribution and Bulk Density data. Soil Sci. Soc. Am. J. 45:1023-1030.

Atchison, G. and P. Butler. 1951. Gypsum Block Moisture Meters as Instruments for the Measurement of Tension in Water. Austral. J. App. Sci. 2:257-266.

Baker, J.M. and R.R. Allmaras. 1990. System for Automating and Multiplexing Soil Moisture Measurement by Time-Domain Reflectometry. Soil Sci. Soc. Am. J. 544:1-6.

Baker, J.M. and R.J. Lascano. 1989. The Spatial Sensitivity of Time-Domain Reflectometry. Soil Science 147:378-384.

Barrs, H. and R. Slaytor. 1965. Experience with Three Vapor Methods for Measuring Water Potential in Plants. In: Proc. Montpelier Symp. on Methodology of Plant Eco-Physiology, F. Eckardt (ed.), UNESCO Arid Zone Research 25:369-384.

Beck, A., F. Anglin, and J. Sass. 1971. Analysis of Heat Flow Data--In Situ Thermal Conductivity Measurements. Can. J. Earth Sci. 8:1-19.

Becker, J., G. Green, and G. Pearson. 1946. Properties and Use of Thermistors--Thermally Sensitive Resistors. Elec. Eng. Trans. 65:711-725.

Bell, J.P., T.J. Dean, and M.G. Hodnett. 1987. Soil Moisture Measurement by an Improved Capacitance Techniques, Part II: Field Techniques, Evaluation and Calibration. J. Hydrology 93:79-90. (See also, Dean et al., [1987].)

Bianchi, W.B. 1962. Measuring Soil Moisture Tension Changes. Agricultural Engineering 43:398-399.

Bianchi, W.C. and R. Tovey. 1968. Continuous Monitoring of Soil Moisture Tension Profiles. Trans. Am. Soc. Agric. Eng. 11(3):441-447.

Birchak, J., C. Gardner, and H. Hipp. 1974. High Dielectric Constant Microwave Probes for Sensing Soil Moisture. IEEE Proc. 62:93-98.

Blackwell, J. 1954. A Transient-Flow Method for Determinations of Thermal Constants of Insulating Materials in Bulk, Part I: Theory. J. Appl. Physics 25:137-144.

Blackwell, J. 1956. The Axial Flow Error in the Thermal Conductivity Probe. Can. J. Phys. 34:412-417.

Bloodworth, M. and J. Page. 1957. Use of Thermistors for the Measurement of Soil Moisture and Temperature. Soil Sci. Soc. Am. Proc. 21:11-15.

Bloomer, J. and J. Ward. 1979. A Semi-Automatic Field Apparatus for the Measurement of Thermal Conductivities of Sedimentary Rocks. J. Physics E. Scientific Instruments 12:1033-1035.

Bocking, K.A. and D.G. Fredlund. 1979. Use of the Osmotic Tensiometer to Measure Negative Pore Water Pressure. Geotech. Testing J. 2(1):3-10.

Boersma et al. (1972)--see Nielsen et al. (1972).

Bourget, S., D. Elrick, and C. Tanner. 1958. Electrical Resistance Units for Moisture Measurements: Their Moisture Hysteresis, Uniformity, and Sensitivity. Soil Science 86:298-304.

Bouwer, H. and R.D. Jackson. 1974. Determining Soil Properties. In: Drainage for Agriculture, J. van Schilfgaarde (ed.), ASA Agronomy Monograph No. 17, American Society of Agronomy, Madison, WI, pp. 611-672.

Bouyoucos, G. 1949. Nylon Electrical Resistance Unit for Continuous Measurement of Soil Moisture in the Field. Soil Science 67:319-330.

Bouyoucos, G. 1952. Methods for Measuring the Moisture Content of Soils Under Field Conditions. In: Frost Action in Soils, A Symp., Highway Research Board, Special Rept. No. 2, National Res. Council Publ. 213, Washington, DC, pp. 64-74.

Bouyoucos, G.J. 1953. More Durable Plaster-of-Paris Moisture Blocks. Soil Science 76:447-451.

Bouyoucos, G. 1954. New Type Electrode for Plaster of Paris Moisture Blocks. Soil Science 78:339-342.

Bouyoucos, G. 1960. Measuring Soil Moisture Tension. Agric. Eng. 41:40-41.

Bouyoucos, G. and A. Mick. 1940. An Electrical Resistance Method for the Continuous Measurement of Soil Moisture Under Field Conditions. Mich. Agric. Exp. Sta. Tech. Bull. 172:3-38.

Bouyoucos, G.J. and A.H. Mick. 1947. Improvements in the Plaster-of-Paris Absorption Block Electrical Resistance Method for Measuring Soil Moisture under Field Conditions. Soil Science 63:455-465.

Bouyoucos, G. and A. Mick. 1948. A Fabric Absorption Unit for Continuous Measurement of Soil Moisture in the Field. Soil Science 66:217-232.

Box, J. 1965. Design and Calibration of a Thermocouple Psychrometer which Uses the Peltier Effect. In: Humidity and Moisture, Vol I., A. Weiler (ed.), Reinhold, New York, NY, pp. 110-121.

Brakensiek, D.L., H.B. Osborn, and W.J. Rawls. 1979. Field Manual for Research in Agricultural Hydrology. U.S. Dept. Agric. Handbook 224. [Soil water potential; soil moisture: gravimetric, nuclear methods]

Brewster, M.L., J.D. Redman, and A.P. Annan. 1992. Monitoring of a Controlled Injection of Perchloroethylene in a Sandy Aquifer with Ground Penetrating Radar and Time Domain Reflectometry. In: SAGEEP '92, Society of Engineering and Mineral Exploration Geophysicists, Golden, CO, pp. 611-618.

Bridge, B.J. and P.J. Ross. 1985. A Portable Microcomputer Controlled Drip Infiltrometer: Field Measurement of Sorptivity, Hydraulic Conductivity, and Time for Ponding. Aust. J. Soil Research 23:393-404.

Brisco, B., T.J. Pultz, R.J. Brown, G.C. Topp, M.A. Hares, and W.D. Zebchuk. 1992. Soil Moisture Measurement Using Portable Dielectric Probes and Time Domain Reflectometry. Water Resources Research 28(5):1339-1346.

Brown, R. 1970. Measurement of Water Potential with Thermocouple Psychrometers: Construction and Applications. INT-RP-80, U.S. Forest Service Intermountain Forest Research and Experiment Station, Ogden, UT, 27 pp.

Brown, R. and J. Collins. 1980. A Screen-Caged Thermocouple Psychrometer and Calibration Chamber for Measurements of Plant and Soil Water Potential. Agron. J. 72:851-853.

Brown, R. and R. Johnson. 1976. Extended Field Use of Screen-Covered Thermocouple Psychrometers. Agron. J. 68:995-996.

Brown, R. and B. Van Heveren (eds.). 1972. Psychrometry in Water Relations Research. Utah Agric. Exp. Station, Logan, UT.

Brown, R.H., A.A. Konoplyantsev, J. Ineson, and V.S. Kovalensky. 1983. Ground-Water Studies: An International Guide for Research and Practice. Studies and Reports in Hydrology No. 7, UNESCO, Paris. (Originally published in 1972, with supplements added in 1973, 1975, 1977, and 1983.)

Bruce, R.R. 1972. Hydraulic Conductivity Evaluation of the Soil Profile from Soil Water Retention Relations. Soil Sci. Soc. Am. Proc. 36:555-561.

Bruce, R.R. and A. Klute. 1956. The Measurement of Soil Moisture Diffusivity. Soil Sci. Am. Proc. 20:458-462.

Bruce, R.R. and R.J. Luxmore. 1986. Water Retention: Field Methods. In: Methods of Soil Analysis, Part 1, 2nd edition, A. Klute (ed.), Agronomy Monograph No. 9, American Society of Agronomy, Madison, WI, pp. 663-686.

Brust, K.J., C.H.M. van Bavel, and G.B. Stirk. 1968. Hydraulic Properties of a Clay Loam Soil and the Field Measurement of Water Uptake by Roots: III. Comparison of Field and Laboratory Data on Retention and of Measured and Calculated Conductivities. Soil Sci. Soc. Am. Proc. 32:322-326.

Brutsaert, W.H. 1976. The Concise Formulation of Diffusive Sorption of Water on Dry Soil. Water Resources Research 12:1118-1124.

Brutsaert, W.H. 1979. Universal Constants for Scaling the Exponential Soil Water Diffusivity? Water Resources Research 15:481-483.

Bumb, A.C., C.L. Murphy, and L.G. Everett. 1991. A Comparison of Three Functional Forms for Representing Soil Moisture Characteristics. Ground Water Management 5:501-518 (5th NOAC).

Burt, T. 1978. An Automatic Fluid-Scanning Switch Tensiometer System. Brit. Geomorphological Res. Gp. Tech. Bull., 30 pp.

Campbell, E. 1972. Vapor Sink and Thermal Gradient Effects on Psychrometer Calibration. In: Psychrometry in Water Relations Research, R. Brown and B. Van Heveren (eds.), Utah Agric. Exp. Station, Logan, UT, pp. 94-97.

Campbell, G.S. 1977. Introduction to Environmental Biophysics. Springer-Verlag, New York, NY. [Thermocouple psychrometers]

Campbell, G. 1979. Improved Thermocouple Psychrometers for Measurement of Soil Water Potential in a Temperature Gradient. J. Physics E. Scientific Instruments 12:739-743.

Campbell, G. and W. Gardner. 1971. Psychrometric Measurement of Soil Water Potential: Temperature and Bulk Density Effects. Soil Sci. Soc. Am. Proc. 35:8-12.

Campbell, G.S. and G.W. Gee. 1986. Water Potential: Miscellaneous Methods. In: Methods of Soil Analysis, Part 1, 2nd edition, A. Klute (ed.), Agronomy Monograph No. 9, American Society of Agronomy, Madison, WI, pp. 619-633.

Campbell, G., J. Trull, and W. Gardner. 1968. A Welding Technique for Peltier Thermocouple Psychrometers. Soil Sci. Soc. Am. Proc. 32:887-889.

Carsel, R.F. and R.S. Parrish. 1988. Developing Joint Distributions of Soil Water Retention Characteristics. Water Resources Research 24:755-769.

Cary, J.W., J.F. McBride, and C.S. Simmons. 1989. Electrooptic Detection of Liquid in Translucent Porous Material. Soil Sci. Soc. Am. J. 53:1591-1595.

Cary, J.W., G.W. Gee, and C.S. Simmons. 1991. Using an Electro-Optical Switch to Measure Soil Water Suction. Soil Sci. Soc. Am. J. 55:1798-1800.

Cassel, D.K. and A. Klute. 1986. Water Potential: Tensiometry. In: Methods of Soil Analysis, Part 1, 2nd edition, A. Klute (ed.), Agronomy Monograph No. 9, American Society of Agronomy, Madison, WI, pp. 563-596.

Cassel, D.K and D.R. Nielsen. 1986. Field Capacity and Available Water Capacity. In: Methods of Soil Analysis, Part 1, 2nd edition, A. Klute (ed.), Agronomy Monograph No. 9, American Society of Agronomy, Madison, WI, pp. 901-926.

Cassel, D.K., A.W. Warrick, D.R. Nielsen, and J.W. Biggar. 1968. Soil Water Diffusivity Values Based Upon Time Dependent Soil Water Content Distributions. Soil Sci. Soc. Am. Proc. 32:774-777.

Childs, E.C. 1969. An Introduction to the Physical Basis of Soil Water Phenomena. Wiley Interscience, New York, NY, 493 pp.

Chong, S.-K. 1983. Calculation of Sorptivity from Constant Rate Rainfall Infiltration Measurements. Soil Sci. Soc. Am. J. 47:627-630.

Chong, S.-K., R.E. Green, and L.R. Ahuja. 1982. Determination of Sorptivity Based on In-Situ Soil Water Redistribution Measurements. Soil Sci. Soc. Am. J. 46:228-230.

Chow, T. and T. DeVries. 1973. Dynamic Measurement of Soil and Leaf Water Potential with a Double Loop Peltier Type Thermocouple Psychrometer. Soil Sci. Soc. Am. Proc. 37:181-188.

Chudobiak, W.J., B.A. Syrett, and H.M. Hafaz. 1979. Recent Advances in Broad-Band VHF and UHF Transmission Line Methods for Moisture Content and Dielectric Constant Measurement. IEEE Trans. on Instrumentation and Measurement IM 28:284-289.

Cihlar, J. and F.T. Ulaby. 1974. Dielectric Properties of Soils as a Function of Moisture Content. RSL Technical Report No. 177-47, Univ. of Kansas Center for Research, Inc., Lawrence, KS.

Clausnitzer, V., J.W. Hopmans, and D.R. Nielsen. 1992. Simultaneous Scaling of Soil Water Retention and Hydraulic Conductivity Curves. Water Resources Research 28(1):19-31.

Clothier, D.E. and I. White. 1982. Water Diffusivity of a Field Soil. Soil Sci. Soc. Am. J. 46:155-158.

Colbeck, S. 1976. On the Use of Tensiometers in Snow Hydrology. J. Glaciology 17:135-140.

Cole, R.H. 1977. Time Domain Reflectometry. Ann. Rev. Phys. Chem. 28:283-300.

Colman, E. and T. Hendrix. 1949. Fiberglass Electrical Soil-Moisture Instrument. Soil Science 67:425-438.

Colman, E.A., W.B. Hanawalt, and C.R. Burck. 1946. Some Improvement in Tensiometer Design. J. Am. Soc. Agronomy 38:455-458

Croney, D., J. Coleman, and E. Currier. 1951. The Electrical Resistance Method of Measuring Soil Moisture. Brit. J. Appl. Phys. 2:85-91.

Cummings, R. and R. Chandler. 1940. A Field Comparison of the Electrothermal and Gypsum Block Electrical Resistance Methods with the Tensiometer Method for Estimating Soil Moisture In Situ. Soil Sci. Soc. Am. Proc. 5:80-85.

Dalton, F.N. 1989. Time Domain Reflectometry: Simultaneous In-Situ Measurement of Soil Water Content and Salinity. Final Report BARD Proj. US-868-84, U.S. Salinity Laboratory, Riverside, CA.

Dalton, F. and S. Rawlins. 1968. Design Criteria for Peltier-Effect Thermocouple Psychrometers. Soil Science 105:12-17.

Dalton, F.N. and M.Th. van Genuchten. 1986. The Time Domain Reflectometry Method for Measuring Soil Water Content and Salinity. Geoderma 38:237-250.

Dalton, F.N., W.N. Herkelrath, D.S. Rawlins, and J.D. Rhoades. 1984. Time Domain Reflectometry: Simultaneous Measurement of Soil Water Content and Electrical Conductivity with a Single Probe. Science 224:989-990.

Daniel, D.E. 1979. Thermocouple Psychrometers for Measuring Suction in Unsaturated Soils. A Report for the Project: A Study of Shallow Land Burial of Low-Level Radioactive Waste, Sponsored by Los Alamos Scientific Laboratory, Albuquerque, NM, 94 pp.

Daniel, D., J. Hamilton, and R. Olson. 1981. Suitability of Thermocouple Psychrometers for Studying Moisture Movement in Unsaturated Soils. In: Permeability and Groundwater Contaminant Transport, T. Zimmie and C. Riggs (eds.), ASTM STP 746, American Society for Testing and Materials, Philadelphia, PA, pp. 84-100.

Daniel, D.E., P.M. Burton, and S-D. Hwang. 1992. Evaluation of Four Vadose Zone Probes Used for Leak Detection and Monitoring. In: Current Practices in Ground Water and Vadose Zone Investigations, ASTM STP 1118, D.M. Nielsen and M.N. Sara (eds.), American Society for Testing and Materials, Philadelphia, PA, pp. 124-139. [Gypsum/fiberglass resistance sensors, heat dissipation sensors, four electrode resistivity sensor]

Dasberg, S. and F.N. Dalton. 1985. Time Domain Reflectometry Field Measurements of Soil Water Content and Electrical Conductivity. Soil Sci. Soc. Am. J. 49:293-297.

Dasberg, S. and J.W. Hopmans. 1992. Time Domain Reflectometry Calibration for Uniformly and Nonuniformly Wetted Sandy and Clayey Soils. Soil Sci. Soc. Am. J. 56:1341-1345.

Davis, J.L. and A.P. Annan. 1977. Electromagnetic Detection of Soil Moisture: Progress Report I. Can. J. Remote Sensing 3:76-86.

Davis, J.L. and W.J. Chudobiak. 1975. In Situ Meter for Measuring Relative Permittivity of Soils. Geol. Survey of Canada Paper 75-1A, pp. 75-79.

Davis, J.L., R. Singh, B.G. Steman, and M.J. Waller. 1984. Innovative Concepts for Detecting and Locating Leaks in Waste Impoundment Liner Systems: Acoustic Emission Monitoring and Time Domain Reflectometry. EPA/600/2-84/058 (NTIS PB84-161819), 105 pp.

Day, P.R., G.H. Bolt, and D.M. Anderson. 1967. Nature of Soil Water. In: Irrigation of Agricultural Lands, R.M. Hagan, H.R. Haise, and T.W. Edminster (eds.), Agronomy Monograph No. 11, American Society of Agronomy, Madison, WI, pp. 193-208.

Dean, T.J., J.P. Bell, and A.J.B. Baty. 1987. Soil Moisture Measurement by an Improved Capacitance Techniques, Part I. Sensor Design and Performance. J. Hydrology 93:67-78. (See also, Bell et al. [1987].)

DeJong, R. 1982. Assessment of Empirical Parameters that Describe Soil Water Characteristics. Can. Agric. Eng. 24:65-70.

Dennehy, K.F. and P.B. McMahon. 1989. Water Movement in the Unsaturated Zone at a Low-Level Radioactive-Waste Burial Site

Near Barnwell, South Carolina. U.S. Geological Survey Water Supply Paper 2345, 40 pp. [Tensiometers, resistance sensors, ET (Bowen ratio), ground-water balance]

DePlater, C.V. 1955. A Portable Capacitance Type Soil Moisture Meter. Soil Science 80:391-395.

DeVries, D. 1952. A Nonstationary Method for Determining Thermal Conductivity of Soil In Situ. Soil Science 73:83-89.

DeVries, D. 1953. Some Results of Field Determinations of the Moisture Content of Soil from Thermal Conductivity Measurements. Neth. J. Agric. Sci. 1:115-121.

DeVries, D. and K.M. King. 1961. Note on the Volume of Influence of a Neutron Surface Moisture Probe. Can. J. Soil Science 41:253-257.

DeVries, D. and A. Peck. 1958a. On the Cylindrical Probe Method of Measuring Thermal Conductivity with Special Reference to Soils, I: Extension of Theory and Discussion of Probe Characteristics. Austral. J. Phys. 11:225-271.

DeVries, D. and A. Peck. 1958b. On the Cylindrical Probe Method of Measuring Thermal Conductivity with Special Reference to Soils, II: Analysis of Moisture Effects. Austral. J. Phys. 11:409-423.

Dirksen, C. 1975. Determination of Soil Water Diffusivity by Sorptivity Measurements. Soil Sci. Soc. Am. Proc. 39:22-27.

Dunne, T. and L.B. Leopold. 1978. Water in Environmental Planning. W.H. Freeman, San Francisco, CA, 818 pp.

Elrick, D.E., R.G. Kachonoski, E.A. Pringle, and A.L. Ward. 1992. Parameter Estimates of Field Solute Transport Models Based on Time Domain Reflectometry Measurements. Soil Sci. Soc. Am. J. 56:1663-1666.

El-Samie, A. and A. Marsh. 1955. A Tube Containing Gypsum Blocks for Following Moisture Changes in Undisturbed Soil. Soil Sci. Soc. Am. Proc. 19:404-406.

Elzeftawy, A. and R.S. Mansell. 1975. Hydraulic Conductivity Calculations for Unsaturated Steady-State and Transient-State Flow in Sand. Soil Sci. Soc. Am. Proc. 39:599-603.

Enfield, C.G. and C.V. Gillaspy. 1980. Pressure Transducer for Remote Data Acquisition. Trans. Am. Soc. Agric. Eng. 23:1195-1196, 1200.

Enfield, C.G. and J.J.C. Hsieh. 1972. Application of Thermocouple Psychrometers to Soil Water Transport. Water Resources Research 7:1349-1353.

Enfield, C.G., J.J.C. Hsieh, and A.W. Warrick. 1973. Evaluation of Water Flux Above a Deep Water Table Using Thermocouple Psychrometers. Soil Sci. Soc. Am. Proc. 37:968-970.

Everett, L.G., L.G. Wilson, and E.W. Hoylman. 1983. Vadose Zone Monitoring for Hazardous Waste Sites. EPA/600/X-83/064 (NTIS PB84-212752). (Also published in 1984 by Noyes Data Corporation, Park Ridge, NJ.)

Fellner-Feldegg, H. 1969. The Measurement of Dielectrics in the Time Domain. J. Phys. Chem. 73:616-623.

Fellner-Feldegg, H. 1972. A Thin-Sample Method for the Measurement of Permeability, Permittivity, and Conductivity in the Frequency and Time Domain. J. Phys. Chem. 76:2116-2122.

Fitzsimmons, D.W. and N.C. Young. 1972. Tensiometer-Pressure Transducer Systems for Studying Unsteady Flow Through Soils. Trans. Am. Soc. Agr. Eng. 15(2):272-275.

Freeze, R.A. and J.A. Cherry. 1979. Groundwater. Prentice-Hall, Inc., Englewood Cliffs, NJ, 604 pp.

Fritschen, L.J. and L.W. Gay. 1979. Environmental Instrumentation. Springer-Verlag, New York, NY. [Thermocouple psychrometers]

Fritton, D., W. Busscher, and J. Alpert. 1974. An Inexpensive but Durable Thermal Conductivity Probe for Field Use. Soil Sci. Soc. Am. Proc. 38:854-855.

Fuchs, M. and A. Hadas. 1973. Analysis of the Performance of an Improved Soil Heat Flux Transducer. Soil Sci. Soc. Am. Proc. 37:173-175.

Fuchs, M. and C. Tanner. 1968. Calibration and Field Test of Soil Heat Flux Plates. Soil Sci. Soc. Am. Proc. 32:326-328.

Gairon, S. and A. Hadas. 1973. Measurement of Water Status in Soils. In: Arid Zone Irrigation, B. Yaron, E. Danfoss, and Y. Vaadia (eds.), Springer-Verlag, New York, NY, pp. 215-226.

Gardner, W.R. 1970. Field Measurement of Soil Water Diffusivity. Soil Sci. Soc. Am. Proc. 34:832-833.

Gardner, W.H. 1986. Water Content. In: Methods of Soil Analysis, Part 1, 2nd edition, A. Klute (ed.), Agronomy Monograph No. 9, American Society of Agronomy, Madison, WI, pp. 493-544.

Gardner, W.R. and M.S. Mayhugh. 1958. Solutions and Tests of the Diffusion Equation for the Movement of Water in Soil. Soil Sci. Soc. Am. Proc. 22:197-201.

Gardner, C.M.K., J.P. Bell, J.D. Cooper, T.J. Dean, M.G. Hodnett, and N. Gardner. 1991. Soil Water Content. In: Soil Analysis: Physical Methods, K.A. Smith and C.E. Mullins (eds.), Marcel Dekker, New York, NY, pp. 1-73.

Gee, G.W. and M.D. Campbell. 1991. A Wick Tensiometer to Measure Low Tensions in Coarse Soils. Soil Sci. Soc. Am. J. 54:1498-1500.

Gee, G.W., M.D. Campbell, G.S. Campbell, and J.H. Campbell. 1992. Rapid Measurement of Low Soil Water Potentials Using a Water Activity Meter. Soil Sci. Soc. Am. J. 56:1068-1070.

Gillham, R.S., A. Klute, and D.F. Heerman. 1976. Hydraulic Properties of a Porous-Medium--Measurement and Empirical Representation. Soil Sci. Soc. Am. Proc. 40:203-207.

Gillham, R.W., A. Klute, and D.F. Heerman. 1979. Measurement and Numerical Simulation of Hysteretic Flow in a Heterogeneous Porous Medium. Soil Sci. Soc. Am. J. 43:1061-1067. [Empirical equations]

Green, R.E., L.R. Ahuja, and S.K. Chang. 1986. Hydraulic Conductivity, Diffusivity, and Sorption of Unsaturated Soils: Field Methods. In: Methods of Soil Analysis, Part I, 2nd edition, A. Klute (ed.), Agronomy Monograph No. 9, American Society of Agronomy, Madison WI, pp. 771-798.

Gregson, K.D., J. Hector, and M. McGowan. 1987. A One-Parameter Model for the Soil Water Characteristic. J. Soil Science 38:483-486.

Gupta, S.C. and W.E. Larson. 1979. Estimating Soil Water Retention Characteristics from Particle Size Distribution, Organic Matter Percent and Bulk Density. Water Resources Research 15:1633-1635.

Haise, H. and O. Kelley. 1946. Relation of Moisture Tension to Heat Transfer and Electrical Resistance in Plaster of Paris Blocks. Soil Science 61:411-422.

Hancox, N. and J. Walker. 1966. The Influence of Liquid Resistivity Changes on Plaster of Paris Resistance and Capacitance Moisture Gages. Brit. J. Appl. Phys. 17:827-833.

Haridasan, M. and R.D. Jensen. 1972. Effect of Temperature on Pressure Head-Water Content Relationship and Conductivity of Two Soils. Soil Sci. Soc. Am. Proc. 36:703-708.

Haverkamp, R. and J.Y. Parlange. 1986. Predicting the Water-Retention Curve from Particle-Size Distribution: 1. Sandy Soils Without Organic Matter. Soil Science 142:325-339.

Hawley, M.E., R.H. McCuen, and T.J. Jackson. 1982. Volume Accuracy Relationship in Soil Moisture Sampling. J. Irr. Drain. Div. ASCE 108(IRI):1-11.

Heimovaara, T., F.N. Dalton, and J.A. Poss. 1988. Time Domain Reflectometry: A Method for Measurement Volumetric Water Content and Bulk Electrical Conductivity of Soils. U.S. Salinity Laboratory Research Report 88, Riverside, CA.

Hendrickx, J.M.H. 1990. Determination of Hydraulic Soil Properties. In: Process Studies in Hillslope Hydrology, M.G. Anderson and T.P. Burt (eds.), John Wiley & Sons, New York, NY, pp. 43-92. [Water content: gravimetry, neutron; water potential: tensiometry; water retention]

Hendrickx, J.M.H. and J.L. Nieber. 1985. Effect of Tensiometer Cup Size on Soil Water Tension Variability. Agronomy Abstracts (American Society of Agronomy Annual Meetings), American Society of Agronomy, Madison, WI, p. 140.

Hendrickx, J.M.H., P.J. Wierenga, and M.S. Nash. 1990. Variability of Soil Water Tension and Soil Water Content. Agric. Water Manage. 18:135-148.

Hendrickx, J.M.H., A.S. Khan, M.H. Bannink, D. Birch and C. Kidd. 1991. Numerical Analysis of Groundwater Recharge through Stony Soils Using Limited Data. J. Hydrology 127:173-192. [Soil water retention/hydraulic conductivity estimation using texture]

Hillel, D.I. and W.R. Gardner. 1970. Measurement of Unsaturated Conductivity and Diffusivity by Infiltration through an Impeding Layer. Soil Science 109:149-153. [Crust test]

Hipp, J.E. 1974. Soil Electromagnetic Parameters as a Function of Frequency, Soil Density, and Soil Moisture. Proc. IEEE 62:98-103.

Hoekstra, P. and A. Delaney. 1974. Dielectric Properties of Soils at UHF and Microwave Frequencies. J. Geophysical Research 79:1699-1708.

Hoffman, G., W. Herkelrath, and R. Austin. 1969. Simultaneous Cycling of Peltier Thermocouple Psychrometers for Rapid Water Potential Measurements. Agron. J. 61:597-601.

Hoffman, G., J. Oster, and S. Merrill. 1972. Automated Measurement of Water Potential and Its Components Using Thermocouple Psychrometers. In: Psychrometry in Water Relations Research, R. Brown and B. Van Heveren (eds.), Utah Agric. Exp. Station, Logan, UT, pp. 123-130.

Hokett, S.L., J.B. Chapman, and S.D. Cloud. 1992. Time Domain Reflectometry Response to Lateral Soil Water Content Heterogeneities. Soil Sci. Soc. Am. J. 56:313-316.

Holmes, J.W., S.A. Taylor, and J.J. Richards. 1967. Measurement of Soil Water. In: Irrigation of Agricultural Lands, R.M. Hagan, H.R. Haise, and T.W. Edminster (eds.), Agronomy Monograph No. 11, American Society of Agronomy, Madison, WI, pp. 275-298.

Hook, W.R., N.J. Livingston, Z.J. Sun, and P.B. Hook. 1992. Remote Diode Shorting Improves Measurement of Soil Water by Time Domain Reflectometry. Soil Sci. Soc. Am. J. 56:1384-1391.

Hooper, F. 1952. The Thermal Conductivity Probe. In: Frost Action in Soils, A Symp., Highway Res. Board Special Rept. No. 2., National Res. Council Publ. 213, Washington, DC, pp. 57-59.

Hooper, F. and F. Leeper. 1950. Transit Heat Flow Apparatus for the Determination of Thermal Conductivities. Trans. Am. Soc. of Heating and Ventilation Eng. 56:309-329.

Hsieh, J. and F. Hungate. 1970. Temperature Compensated Peltier Psychrometer for Measuring Plant and Soil Water Potential. Soil Science 110:253-257.

Hsieh, J., C. Enfield, and F. Hungate. 1972. Application of Temperature-Compensated Psychrometers to the Measurement of Water Potential Gradients. In: Psychrometry in Water Relations Research, R. Brown and B. Van Heveren (eds.), Utah Agric. Exp. Station, Logan, UT, pp. 154-158.

Huber, M. and C. Dirksen. 1978. Multiple Tensiometer Flushing System. Soil Sci. Soc. Am. J. 42:168-170.

Hunter, A.S. and O.J. Kelley. 1946. Changes in the Construction of Soil Moisture Tensiometers for Field Use. Soil Science 61:k215-218.

Ingvalson, R., J. Oster, S. Rawlins, and G. Hoffman. 1970. Measurement of Water Potential and Osmotic Potential in Soil with a Combined Thermocouple Psychrometer and Salinity Sensor. Soil Sci. Soc. Am. Proc. 34:570-574.

Jackson, R.D. 1963. Porosity and Soil-Water Diffusivity Relations. Soil Sci. Soc. Am. Proc. 27:123-126.

Jaeger, J. 1958. The Measurement of Thermal Conductivity and Diffusivity with Cylindrical Probes. Trans. Am. Geophys. Union 39:708-710.

Johnson, A.I. 1962. Methods of Measuring Soil Moisture in the Field. U.S. Geological Survey Water Supply Paper 1619-U, 25 pp.

Jones, T.L., G.W. Gee, and P.R. Heller. 1990. Psychrometric Measurement of Soil Water Potential: Stability of Calibration and Test

of Pressure-Plate Samples. Soil Science 150:535-541.

Jury, W.A., H. Frenkel, H. Fluhler, D. Devitt, and L.H. Stolzy. 1978. Use of Saline Irrigation Waters and Minimal Leaching for Crop Production. Hilgardia 96:169-192. [Field determination of moisture characteristic curve]

Kachonoski, R.G., I.J. Van Wesenbeeck, P. Von Bertoldi, A. Ward, and C. Hamlen. 1990. Measurement of Soil Water Content During Three-Dimensional Axial-Symmetric Water Flow. Soil Sci. Soc. Am. J. 54:645-649. [TDR]

Kachonoski, R.G., E. Pringle, and A. Ward. 1992. Field Measurement of Solute Travel Times Using Time Domain Reflectometry. Soil Sci. Soc. Am. J. 56:47-52.

Kelley, O. 1944. A Rapid Method of Calibrating Various Instruments for Measuring Soil Moisture In Situ. Soil Science 58:433-440.

Kemper, W. and M. Amemiya. 1958. Utilization of Air Permeability of Porous Ceramics as a Measure of Hydraulic Stress in Soils. Soil Science 85:117-124.

Kirkham, D. and W.L. Powers. 1972. Advanced Soil Physics. Wiley-Interscience, New York, NY.

Klute, A. 1965. Water Diffusivity. In: Method of Soil Analysis, C.A. Black (ed.), Mongograph No. 9, American Society of Agronomy, Madison, WI, pp. 262-272.

Klute, A. 1972. The Determination of the Hydraulic Conductivity and Diffusivity of Unsaturated Soils. Soil Science 113:264-276.

Klute, A. 1986. Water Retention: Laboratory Methods. In: Methods of Soil Analysis, Part 1, 2nd edition., A. Klute (ed.), Agronomy Monograph No. 9, American Society of Agronomy, Madison, WI, pp. 635-662.

Klute, A. and D.B. Peters. 1962. A Recording Tensiometer with a Short Response Time. Soil Sci. Soc. Am. Proc. 26:87-88.

Koorevaar, P. and A. Janse. 1972. Some Design Criteria of Thermocouple Psychrometers. In: Psychrometry in Water Relations Research, R. Brown and B. Van Heveren (eds.), Utah Agric. Exp. Station, Logan, UT, pp. 74-83.

Korven, H. and S. Taylor. 1959. The Peltier Effect and Its Use for Determining Relative Activity of Soil Water. Can. J. of Soil Science 29:76-85.

Kubo, J. 1953. A New Method for the Soil Moisture Measurement. J. Agric. Meteorol. of Tokyo 8:108-110.

Kuráž, V. 1981. Testing of a Field Dielectric Soil Moisture Meter. ASTM Geotechnical Testing Journal 4:111-116.

Kuráž, V., and J. Matousek. 1977. A New Dielectric Soil Moisture Meter for Field Measurement of Soil Moisture. Intl. Commission of Irrigation and Drainage Bull. 26:76-79.

Kuráž, V., M. Kutílek, and I. Kašpar. 1970. Resonance-Capacitance Soil Moisture Meter. Soil Science 110:278-279.

Kutílek, M. and J. Valentova. 1986. Sorptivity Approximations. Trans. Porous Media 1:57-62.

Lambert, J. and J. van Schilfgaarde. 1965. A Method of Determining the Water Potential of Intact Plants. Soil Science 100:1-9. [Thermocouple psychrometer]

Lang, A. 1967. Osmotic Coefficients and Water Potentials of Sodium Chloride Solutions from 0 to 40°C. Austral. J. Chem. 20:2017-2023.

Lang, A. and E. Trickett. 1965. Automatic Scanning of Spanner and Droplet Psychrometers Having Outputs of 30uV. J. Scientific Instruments 42:777-782.

Layman, R. 1979. Soil Moisture Sensor. Plasma Physics Lab. Rept. DCPPL-SM-3. Dartmouth College, Hanover, NH.

Leonard, R. and P. Low. 1962. A Self-Adjusting Null-Point Tensiometer. Soil Sci. Soc. Am Proc. 26:123-125.

Long, F. 1982. A New Solid-State Device for Reading Tensiometers. Soil Science 133:131-132.

Long, F. and M. Huck. 1980. An Automated System for Measuring Soil Water Potential Gradients in a Rhizotron Soil Profile. Soil Science 129:305-310.

Lopushinsky, W. 1971. An Improved Welding Jig for Peltier Thermocouple Psychrometers. Soil Sci. Soc. Am. Proc. 35:149-150.

Lopushinsky, W. and G. Klock. 1971. Construction Details of Ceramic Bulb Psychrometers. U.S. Forest Service, Forest Hydrology Lab., Wenatshee, WA, 8 pp.

Lowery, B., B.C. Datiri, and B.J. Andraski. 1986. An Electrical Readout System for Tensiometers. Soil Sci. Soc. Am. J. 50:494-496.

Mack, A. and E. Brach. 1966. Soil Moisture Measurement with Ultrasonic Energy. Soil Sci. Soc. Am. Proc. 30:544-548.

Madsen, H.B., C.R. Jensen, and T. Boysen. 1986. A Comparison of the Thermocouple Psychrometer and the Pressure Plate Methods for Determination of Soil Water Characteristics Curves. J. Soil Science 37:357-362.

Marshall, T.J. 1960. Relations Between Water and Soil. Technical Communication No. 50, Commonwealth Bureau of Soil Science, England.

Marthaler, H.P., V. Vogelsanger, F. Richard, and P.J. Wierenga. 1983. A Pressure Transducer for Field Tensiometers. Soil Sci. Soc. Am. J. 47:624-627.

Matthews, J. 1963. The Design of an Electrical Capacitance-Type Moisture Meter for Agricultural Use. J. Agric. Eng. Res. 8:17-30.

Matzkanin, G. and C. Gardner. 1974. Nuclear Magnetic Resonance Sensors for Moisture Measurement in Roadways. Frost, Moisture, and Erosion. Transportation Res. Record 532:77-86.

Matzkanin, G., E. Selig, and D. Wobschall. 1979. Instrumentation for Moisture Measurement--Bases, Subgrades, and Earth Materials (Sensor Evaluation). Trans. Res. Board NCHRP 21-2(3), 41 pp.

McKee, C.R. and A.C. Bumb. 1984. The Importance of Unsaturated Flow Parameters in Designing A Monitoring System for a Hazardous Waste Site. In: Hazardous Waste and Environmental Emergencies, Hazardous Materials Control Research Institute, Silver Spring, MD, pp. 50-58.

McKim, H., R. Layman, J. Walsh, and T. Pangburn. 1979. Comparison of Radio Frequency, Tensiometer and Gravimetric Soil Moisture Techniques. Plasma Physics Lab. Rept., Dartmouth College, Hanover, NH.

McKim, H.L., J.E. Walsh, and D.N. Arion. 1980a. Review of Techniques for Measuring Soil Moisture In Situ. CRREL Special Report 80-31, U.S. Army Corps of Engineers Cold Regions Research and Engineering Laboratory, Hanover, NH, 17 pp. [Neutron, gamma, NMR, capacitance, tensiometry, hygrometric methods]

McKim, H.L., J.E. Walsh, and T. Pangburn. 1980b. Comparison of Radio Frequency, Tensiometer and Gravimetric Soil Moisture Techniques. In: Proc. 3rd Colloquium on Planetary Water (Niagara Falls, NY), State Univ. of New York, Buffalo, NY, pp. 129-135.

McQueen, I.S. and R.F. Miller. 1968a. Determination of Soil Moisture Potential. In: Water in the Unsaturated Zone, P.E. Rijtema and H. Wassink (eds.), Int. Ass. Sci. Hyd. Pub. No. 82, pp. 147-155. [Filter-paper method]

McQueen, I.S. and R.F. Miller. 1968b. Calibration and Evaluation of a Wide Range Gravimetric Method for Measuring Moisture Stress. Soil Science 106(3):225-231. [Filter paper method]

McQueen, I.S. and R.F. Miller. 1974. Approximating Soil Moisture Characteristics from Limited Data: Empirical Evidence and Tentative Model. Water Resources Research 10(3):521-527.

Meeuwig, R. 1972. A Low-Cost Thermocouple Psychrometer Recording System. In: Psychrometry in Water Relations Research, R. Brown and B. Van Heveren (eds.), Utah Agric. Exp. Station, Logan, UT, pp. 131-135.

Merrill, S.D. and S.C. Rawlins. 1972. Field Measurement of Soil Water Potential with Thermocouple Psychrometers. Soil Science 113(2):102-109.

Merrill, S.D., F. Dalton, W. Herkelrath, G. Hoffman, R. Ingvalson, J. Oster, and S. Rawlins. 1968. Details of Construction of a Multipurpose Thermocouple Psychrometer. Research Rept. 115, U.S. Salinity Lab., Riverside, CA, 9 pp.

Meyn, R. and R. White. 1972. Calibration of Thermocouple Psychrometers: A Suggested Procedure for Development of a Reliable Predictive Model. In: Psychrometry in Water Relations Research, R. Brown and B. Van Heveren (eds.), Utah Agric. Exp. Station, Logan, UT, pp. 56-64.

Michelson, L. and W. Lord. 1962. The Use and Construction of Concentric Gypsum Soil Moisture Sensing Units and a Rapid Method of Determining Mean Resistance and Moisture Values. Am. Soc. Hort. Sci. 81:565-567.

Miller, R.D. 1951. A Technique for Measuring Tension in Rapidly Changing Systems. Soil Science 72:291-301. [Tensiometer]

Miller, R.D. and E. Bresler. 1977. A Quick Method for Estimating Soil Water Diffusivity Functions. Soil Sci. Soc. Am. J. 41:1020-1022.

Mishra, S. and J.C. Parker. 1990. On the Relation Between Saturated Conductivity and Capillary Retention Characteristics. Ground Water 28:775-777.

Mishra, S., J.C. Parker, and N.S. Singhal. 1989. Estimation of Soil Hydraulic Properties and Their Uncertainty from Particle Size Distribution Data. J. Hydrology 108:1-18.

Momin, A. 1945. A New Simple Method of Estimating the Moisture Content of Soil In Situ. Indian J. Agric. Sci. 17:81-85.

Monteith, J. and P. Owen. 1958. A Thermocouple Method for Measuring Relative Humidity in the Range 95-100%. J. Scientific Instruments 35:433-446.

Moore, R. and M. Caldwell. 1972. The Field Use of Thermocouple Psychrometers in Desert Soils. In: Psychrometry in Water Relations Research, R. Brown and B. Van Heveren (eds.), Utah Agric. Exp. Station, Logan, UT, pp. 165-169.

Morrison, R.D. 1983. Groundwater Monitoring Technology. Timco Mfg., Inc., Prairie du Sac, WI, 105 pp. [Sections on use of Teflon for suction lysimeters and casing for monitoring wells are out of date; see Sections 9.2.1 and A.1 in this guide for more current information]

Mualem, Y. and S.P. Friedman. 1991. Theoretical Prediction of Electrical Conductivity in Saturated and Unsaturated Soils. Water Resources Research 27:2771-2777. [Moisture-electrical conductivity relationship]

Mullins, C.E. 1991. Matric Potential. In: Soil Analysis: Physical Methods, K.A. Smith and C.E. Mullins (eds.), Marcel Dekker, New York, NY, pp. 75-109.

Nadler, A. 1991. The Effect of Soil Structure on Bulk Soil Electrical Conductivity (EC_a) Using the TDR and 4P Techniques. Soil Science 152:199-203.

Nadler, A., S. Dasberg, and I. Lapid. 1991. Time Domain Reflectometry Measurements of Water Content and Electrical Conductivity of Layered Soil Columns. Soil Sci. Soc. Am. J. 55:938-943.

Nielsen, D.R., R.D. Jackson, J.W. Cary, and D.D. Evans (eds.). 1972. Soil Water. American Society of Agronomy, Madison, WI, 175 pp. ([Might also be cited as Boersma et al. [1972].)

Nimmo, J.R. 1992. Semiempirical Model of Soil Water Hysteresis. Soil Sci. Soc. Am. J. 56:1723-1730.

Nimmo, J.R. and E.E. Miller. 1986. The Temperature Dependence of Isothermal Moisture vs. Potential Characteristics of Soils. Soil Sci. Soc. Am. J. 50:1105-1113.

Nyhan, J.W. and B.J. Drennon. 1990. Tensiometer Data Acquisition System for Hydrologic Studies Requiring High Temporal Resolution. Soil Sci. Soc. Am. J. 54:293-296. (See also, comment by J.S. Selker and reply by Nyhan and Drennon in SSSAJ 55:1803-1804.)

Oaksford, E.T. 1978. Water-Manometer Tensiometers Installed and Read from the Land Surface. Geotechnical Testing J. 1(4):199-202.

Overgaard, M. 1970. The Calibration Factor of Heat Flux Meters in Relation to the Thermal Conductivity of the Surrounding Medium. Agric. Meteorol. 7:401-410.

Parlange, J.-Y. 1971. Theory of Water Movement in Soils: I. One-Dimensional Absorption. Soil Science 111:134-137.

Parlange, J.-Y. 1975a. Determination of Soil Water Diffusivity by Sorptivity Measurements. Soil Sci. Soc. Am. Proc. 39:1011-1012.

Parlange, J.-Y. 1975b. A Note on the Moisture Diffusivity of Saturated Swelling Systems from Desorption Experiments. Soil Science 120:156-158.

Patterson, D.E. and M.W. Smith. 1981. The Measurement of Unfrozen Water Content by Time Domain Reflectometry: Results from Laboratory Tests. Can. Geotech. J. 18:131-144.

Peck, A. 1968. Theory of the Spanner Psychrometer: 1. The Thermocouple. Agric. Meteorol. 5:433-447.

Peck, A. and R. Rabbidge. 1966a. Soil-Water Potential: Direct Measurement by a New Technique. Science 151:1385-1386.

Peck, A. and R. Rabbidge. 1966b. Direct Measurement of Moisture Potential: A New Technique. In: Proc. UNESCO-Neth. Gov. Symp. Water in the Unsaturated Zone, Wageningen, Netherlands, 1:165-170.

Peck, A. and R. Rabbidge. 1969. Design and Performance of an Osmotic Tensiometer for Measuring Capillary Potential. Soil Sci. Soc. Am. Proc. 33:196-201.

Pereira, H. 1951. A Cylindrical Gypsum Block for Moisture Studies in Deep Soils. J. Soil Science 2:212-223.

Perrier, E. and D. Evans. 1961. Soil Moisture Evaluation by Tensiometers. Soil Sci. Soc. Am. Proc. 25:173-175.

Perrier, E. and A. Marsh. 1958. Performance Characteristics of Various Electrical Resistance Units and Gypsum Materials. Soil Science 86:140-147.

Perroux, K.M., D.E. Smiles, and I. White. 1981. Water Movement in Uniform Soils During Constant-Flux Infiltration. Soil Sci. Soc. Am. J. 45:237-245. [Laboratory measurement of diffusivity-water content relation]

Phene, C., G. Hoffman, and S. Rawlins. 1971a. Measuring Soil Matric Potential In Situ by Sensing Heat Dissipation within a Porous Body: I. Theory and Sensor Construction. Soil Sci. Soc. Am. Proc. 35:27-33.

Phene, C., S. Rawlins, and G. Hoffman. 1971b. Measuring Soil Matric Potential In Situ by Sensing Heat Dissipation within a Porous Body: II. Experimental Results. Soil Sci. Soc. Am. Proc. 35:225-229.

Phene, C., G. Hoffman, and R. Austin. 1973. Controlling Automated Irrigation With Soil Matric Potential Sensor. Trans. Am. Soc. Agric. Eng. 16:773-776.

Philip, J.R. 1955. Numerical Solution of Equations of the Diffusive Type with Diffusivity Concentration Dependent. Trans. Faraday Soc. 51:885-892. [Sorptivity from K or water content; Kirkham and Power (1972) provide worked example]

Philip, J. 1961. The Theory of Heat Flux Meters. J. Geophys. Res. 66:571-579.

Phogat, V.K., L.A.G. Ayimore, and R.D. Schullere. 1991. Simultaneous Measurement of the Spatial Distribution of Soil Water Content and Bulk Density. Soil Sci. Soc. Am. J. 55:908-915. [CAT]

Postlethwaite, J. and E. Trickett. 1956. The Measurement of Soil Moisture. J. Agric. Eng. Res. 1:89-95.

Prebble, R. and J. Currie. 1970. Soil Water Measurement by a Low-Resolution Nuclear Magnetic Resonance Technique. J. Soil Science 21:273-288.

Puckett, W.E., J.H. Dane, and B.F. Hajek. 1985. Physical and Mineralogical Data to Determine Soil Hydraulic Properties. Soil Sci. Soc. Am. J. 49:831-836. [Saturated hydraulic conductivity, soil moisture retention]

Rawlins, S. 1966. Theory for Thermocouple Psychrometers Used to Measure Water Potential in Soil and Plant Samples. Agric. Meteorol. 3:293-310.

Rawlins, S.L. and G.S. Campbell. 1986. Water Potential: Thermocouple Psychrometry. In: Methods of Soil Analysis, Part 1, 2nd edition, A. Klute (ed.), Agronomy Monograph No. 9, American Society of Agronomy, Madison, WI, pp. 597-618.

Rawlins, S. and F. Dalton. 1967. Psychrometric Measurements of Soil Water Potential Without Precise Temperature Control. Soil Sci. Soc. Am. Proc. 31:297-301.

Rawls, W.J. and D.L. Brakensiek. 1985. Prediction of Soil Water Properties for Hydrologic Modelling. In: Proc. ASCE Symp. on Watershed Management for the Eighties, E.B. James and T.J. Ward (eds.), pp. 293-299. [Soil water retention]

Rawls, W.J., D.L. Brakensiek, and K.E. Saxton. 1982. Estimation of Soil Water Properties. Trans. Am. Soc. Agric. Eng. 25:1316-1320, 1328.

Redman, J.D., B.H. Kueper, and A.P. Annan. 1991. Dielectric Stratigraphy of a DNAPL Spill and Implications for Detection with Ground Penetrating Radar. In: Ground Water Management 5:1017-1030 (5th NOAC). [GPR, TDR]

Reeve, M.J. and A.D. Carter. 1991. Water Release Characteristics. In: Soil Analysis: Physical Methods, K.A. Smith and C.E. Mullins (eds.), Marcel Dekker, New York, NY, pp. 111-160.

Reeves, T.L. and S.M. Elgezawi. 1992. Time Domain Reflectometry for Measuring Volumetric Water Content in Processed Oil Shale Waste. Water Resources Research 28(3):769-776.

Rehm, B.W., T.R. Stolzenburg, and D.G. Nichols. 1985. Field Measurement Methods for Hydrogeologic Investigations: A Critical Review of the Literature. EPRI EA-4301, Electric Power Research Institute, Palo Alto, CA.

Rehm, B.W., B.J. Christel, T.R. Stolzenburg, D.G. Nichols, B. Lowery, and B.J. Andraski. 1987. Field Evaluation of Instruments for the Measurement of the Unsaturated Hydraulic Properties of Fly Ash. EPRI EA-5011, Electric Power Research Institute, Palo Alto, CA. [Moisture: gravimetric, resistance cells, neutron probe; matric potential: tensiometers, resistance cells]

Reichardt, K. and P.L. Libardi. 1974. A New Equation to Estimate Soil-Water Diffusivity. In: Proc. Symp. on Isotopes and Radiation Techniques in Studies of Soil Physics, Irrigation, and Drainage in Relation to Crop Production, International Atomic Energy Agency, Vienna, pp. 45-51.

Reichardt, K., D.R. Nielsen, and J.W. Biggar. 1972. Scaling of Horizontal Infiltration into Homogenous Soils. Soil Sci. Soc. Am. Proc. 36:241-245. [Diffusivity-water content relation]

Reinhart, K.G. 1961. The Problem of Stones in Soil Moisture Measurement. Soil Sci. Soc. Am. Proc. 25:268-270.

Reynolds, S. 1970a. The Gravimetric Method of Soil Moisture Determination, Part I: A Study of Equipment and Methodological Problems. J. Hydrology 11(3):258-273.

Reynolds, S. 1970b. The Gravimetric Method of Soil Moisture Determination, Part II: Typical Required Sample Size and Methods of Reducing Variability. J. Hydrology 11(3):274-287.

Reynolds, S. 1970c. The Gravimetric Method of Soil Moisture Determination, Part III: An Examination of Factors Influencing Soil Moisture Variability. J. Hydrology 11(3):288-300.

Reynolds, W.D. and D.E. Elrick. 1990. Ponded Infiltration from a Single Ring: I. Analysis of Steady Flow. Soil Sci. Soc. Am. J. 54:1233-1241.

Rice, R. 1969. A Fast-Response Field Tensiometer System. Trans. Am. Soc. Agr. Eng. 12:48-50.

Richards, L.A. 1942. Soil Moisture Tensiometer Materials and Construction. Soil Science 53:241-248.

Richards, L.A. 1949. Methods of Measuring Soil Moisture Tension. Soil Science 68:95-112.

Richards, L.A. 1965. Physical Conditions of Water in Soils. In: Methods of Soil Analysis, Part 1, 1st edition, C.A. Black (ed.), Agronomy Monograph No. 9, American Society of Agronomy, Madison, WI, pp. 128-152. [Soil water retention; see also, Klute (1986)]

Richards, J.H. and M.M. Caldwell. 1987. Hydraulic Lift: Substantial Nocturnal Water Transport Between Soil Layers by *Artemesia Tridentata* Roots. Oecologia 73:486-489. [Thermocouple psychrometer]

Richards, L.A. and W. Gardner. 1936. Tensiometers for Measuring the Capillary Tension of Soil Water. J. Am. Soc. Agronomy 28:352-358.

Richards, L.A. and O.R. Neal. 1937. Some Field Observations with Tensiometers. Soil Sci. Soc. Am. Proc. 1:71-91.

Richards, L. and G. Ogata. 1958. The Thermocouple for Vapor Pressure Measurement in Biological and Soils Systems at High Humidity. Science 128:1089-1090.

Richards, L. and L. Weaver. 1943. The Sorption-Block Soil Moisture Meter and Hysteresis Effects Related to its Operations. J. Am. Soc. Agronomy 35:1002-1011.

Richards, L.A., M.B. Russell, and O.R. Neal. 1938. Further Developments on Apparatus for Field Moisture Studies. Soil Sci. Soc.

Am. Proc. 2:55-64. [Tensiometers]

Richards, S.J., L.S. Willardson, S. Davis, and J.R. Spencer. 1973. Tensiometer Use in Shallow Ground Water Studies. J. Irrigation and Drainage Div. ASCE 99(IR4):457-464.

Roberts, D.W. 1984. Soil Properties, Classification, and Hydraulic Conductivity Testing: Draft Technical Resource Document for Public Comment. EPA/530/SW-84/925 (NTIS PB87-155784), 184 pp. [Diffusivity: pressure outflow, hot-air method]

Rode, A.A. 1965. Theory of Soil Moisture, Vol. I: Moisture Properties of Soils and Movement of Soil Moisture. Israel Program for Scientific Translations, Jerusalem. (Translated from Russian.)

Rogers, W. 1935. A Soil Moisture Meter Depending on the Capillary Pull of the Soil. J. Agric. Sci. 25:326-343.

Rogowski, A.S. 1971. Watershed Physics: Model of the Soil Moisture Characteristic. Water Resources Research 7(6):1575-1582.

Rogowski, A.S. 1972. Estimation of the Soil Moisture Characteristic and Hydraulic Conductivity: Comparison of Models. Soil Science 114(6):423-429.

Rollwitz, W. 1965. Nuclear Magnetic Resonance as a Technique for Measuring Moisture in Liquids and Solids. In: Humidity and Moisture, Vol. 4, A. Wexler (ed.), Reinhold Publishing Co., New York, NY, pp. 149-162.

Ross, P.J., J. Williams, and K.L. Bristow. 1991. Equation Extending Water-Retention Curves to Dryness. Soil Sci. Soc. Am. J. 55:923-927.

Roth, M. 1966. How to Measure Moisture in Solids. Chem. Eng. 73:83-88.

Roundy, B.A. 1984. Estimation of Water Potential Components of Saline Soils of Great Basin Rangelands. Soil Sci. Soc. Am. J. 48:645-650. [Thermocouple psychrometers and EC saturation extract]

Salaruddin, M. and B. Khasbardar. 1967. An Instrument for Soil Moisture Determination. Indian J. Tech. 5:296-299.

Savage, M.J. and A. Cass. 1984. Measurement of Water Potential Using In Situ Thermocouple Hygrometers. Advances in Agronomy 37:73-126.

Savvides, L., R. Ayers, and M. Ashkar. 1977. A Modified Mercury Tensiometer. Soil Sci. Soc. Am. J. 41:660-661.

Saxton, K.E., W.J. Rawls, J.S. Romberger, and R.I. Papendick. 1986. Estimating Generalized Soil-Water Characteristics from Texture. Soil Sci. Soc. Am. J. 50:1031-1036.

Schlichter, C. 1963. Principles of Magnetic Resonance. Harper and Row, New York, NY, 397 pp.

Schlub, R. and J. Maine. 1979. Portable Recorder for the Continuous Monitoring of Soil Moisture Resistance Blocks. J. Agric. Eng. Res. 24:319-323.

Schmugge, T.J., T.J. Jackson, and H.L. McKim. 1980. Survey of Methods for Soil Moisture Determination. Water Resources Research 16(6):961-979.

Schuh, W.M., R.L. Cline, and M.D. Sweeney. 1988. Comparison of a Laboratory Procedure and a Textural Model for Predicting in Situ Soil Water Retention. Soil Sci. Soc. Am. J. 52:1218-1227.

Scotter, D.R. and B.E. Clothier. 1983. A Transient Method for Measuring Soil Water Diffusivity and Unsaturated Hydraulic Conductivity. Soil Sci. Soc. Am. J. 47:1068-1072. [K(θ) laboratory method]

Selig, E.T. and S. Mansukhani. 1975. Relationship of Soil Moisture to the Dielectric Property. J. Geotechnical Eng. Div. ASCE 101(GT8):755-770.

Selig, E.T., D.C. Wobschall, S. Mansukhani, and A. Motiwala. 1975. Capacitance Sensor for Soil Moisture Measurement. Trans. Res. Board Record 532:64-75.

Shani, U., R.J. Hanks, E. Bresler, and C.A.S. Oliveira. 1987. Field Method for Estimating Hydraulic Conductivity and Matric Potential-Water Content Relations. Soil Sci. Soc. Am. J. 51:298-302.

Shaw, B. and L. Baver. 1939a. An Electrothermal Method for Following Moisture Changes of the Soil In Situ. Soil Sci. Soc. Am. Proc. 4:78-83.

Shaw, B. and L. Baver. 1939b. Heat Conductivity as an Index of Soil Moisture. J. Am. Soc. Agronomy 31:866-891.

Silva, L.F., F.V. Schultz, and J.T. Zalusky. 1974. Electrical Methods of Determining Soil Moisture Content. LARS Information Note 112174, Purdue University, W. Lafayette, IN, 165 pp.

Slater, C. 1942. A Modified Resistance Block for Soil Moisture Measurements. J. Am. Soc. Agronomy 34:284-285.

Slusarchuk, W. and P. Fougler. 1973. Development and Calibration of Thermal Conductivity Probe Apparatus for Use in the Field and Laboratory. Natural Research Council of Canada, Div. of Building Res., TP388, NRCC132267, Ottawa, 18 pp.

Smiles, D.E. 1977. Further Comments on Estimating the Moisture Diffusivity of Saturated Swelling Materials Using Sorptivity Data. Soil Science 124:125-126.

Smiles, D.E. and A.G. Harvey. 1973. Measurement of Moisture Diffusivity in Wet Swelling Systems. Soil Science 116:391-399.

Smiles, D.E., K.M. Perroux, and J.J. Zegelin. 1981. Absorption of Water by Soil: Some Effects of a Saturated Zone. Soil Sci. Soc. Am. J. 45:1153-1158.

Smiles, D.E., J.H. Knight, and K.M. Perroux. 1982. Absorption of Water by Soil: The Effect of a Surface Crust. Soil Sci. Soc. Am. J. 46:476-481.

Smith, M.W. and A.R. Tice. 1988. Measurement of the Unfrozen Water Content of Soils: A Comparison of NMR and TDR Methods. In: 5th Int. Conf. on Permafrost (Trondheim, Norway), Tapir Publ., pp. 473-477.

Smith-Rose, R.L. 1933. The Electrical Properties of Soils for Alternating Currents at Radio Frequencies. Proc. Royal Soc. London 140:359.

Sophocleous, M. 1979. A Thermal Conductivity Probe Designed for Easy Installation and Recovery from Shallow Depths. Soil Sci. Soc. Am. J. 43:1056-1058.

Sorenson, S.K., R.F. Miller, M.R. Welch, D.P. Groeneveld, and F.A. Branson. 1989. Estimating Soil Matric Potential in Owens Valley, California. U.S. Geological Survey Water Supply Paper 2370-C, 18 pp.

Spanner, D. 1951. The Peltier Effect and Its Use in The Measurement of Suction Pressure. J. Experimental Botany 2:145-168.

Stannard, D.I. 1986. Theory, Construction, and Operation of Simple Tensiometers. Ground Water Monitoring Review 6(3):70-78.

Stannard, D.I. 1990. Tensiometers--Theory, Construction and Use. In: Ground Water and Vadose Zone Monitoring, D.M. Nielsen and A.I. Johnson (eds.), ASTM STP 1053, American Society for Testing and Materials, Philadelphia, PA, pp. 34-51.

Stein, J. and D.L. Kane. 1983. Monitoring the Unfrozen Water Content of Soil and Snow Using Time Domain Reflectometry. Water Resources Research 19:1573-1584. (See also comments by Patterson and Smith [WRR 21:1055-1056] and Topp and Davis [WRR 21:1059-1060].)

Su, C. and R.H. Brooks. 1980. Water Retention Measurement for Soils. J. Irrig. and Drain. Div. ASCE 106:105-112.

Talsma, T. 1969. In Situ Measurements of Sorptivity. Aust. J. Soil Research 7:269-276.

Tanner, C.B. and R.J. Hanks. 1952. Moisture Hysteresis in Gypsum Moisture Blocks. Soil Sci. Soc. Am. Proc. 16:48-51.

Taylor, S. 1955. Field Determinations of Soil Moisture. Agric. Eng. 36:654-659.

Tektronix. 1987. 1502B Metallic Time Domain Reflectometer: Operator Manual. Tektronix, Beaverton, OR.

Thiel, T., J. Fouss, and A. Leech. 1963. Electrical Water Pressure Transducers for Field and Laboratory Use. Soil Sci. Soc. Am. Proc. 27:601-602.

Thomas, A.M. 1966. In Situ Measurement of Moisture and Soil and Similar Substances by "Fringe" Capacitance. J. Scientific. Instruments 43:21-27.

Thomas, G.W. and R.E. Phillips. 1991. The Transient Instability of Tensiometer Readings During Infiltration. Soil Science 152:231-235.

Thompson, C.M., L.J. Holcombe, D.H. Gancarz, A.E. Behl, J.R. Erikson, I. Star, R.K. Waddell, and J.S. Fruchter. 1989. Techniques to Develop Data for Hydrogeochemical Models. EPRI EN-6637, Electric Power Research Institute, Palo Alto, CA.

Thony, J. and G. Vachaud. 1980. Automatic Measurement of Soil-Water Pressure Using a Capacitance Manometer. J. Hydrology 46:189-196.

Tice, A., D. Anderrson, and K. Sterret. 1981. Unfrozen Water Contents of Submarine Permafrost Determined by Nuclear Magnetic Resonance. Eng. Geol. 18:135-146.

Topp, G.C. and J.L. Davis. 1981. Detecting Infiltration of Water through Soil Cracks by Time-Domain Reflectometry. Geoderma 26:12-23.

Topp, G.C. and J.L. Davis. 1985a. Measurement of Soil Water Using Time-Domain Reflectometry (TDR): A Field Evaluation. Soil Sci. Soc. Am. J. 49:19-24.

Topp, G.C. and J.L. Davis. 1985b. Time Domain Reflectometry (TDR) and Its Application to Irrigation Scheduling. Advances in Irrigation 3:107-127.

Topp, G.C. and W. Zebchuck. 1979. The Determination of Soil-Water Desorption Curves for Soil Cores. Can. J. Soil Science 59:19-26.

Topp, G.C., J.L. Davis, and A.P. Annan. 1980a. Electromagnetic Determination of Soil Water Content: Measurement in Coaxial Transmission Lines. Water Resources Research 16:574-582.

Topp, G.C., J.L. Davis, and A.P. Annan. 1980b. Electromagnetic Determination of Soil Water Content: Applications of TDR to Field Measurements. In: Proc. Third Colloquium on Planetary Water (Niagara Falls, NY), State Univ. of New York, Buffalo, NY.

Topp, G.C., J.L. Davis, and A.P. Annan. 1982a. Electromagnetic Determination of Soil Water Content Using TDR: I. Applications to Wetting Fronts and Steep Gradients. Soil Sci. Soc. Am. J. 46:672-678.

Topp, G.C., J.L. Davis, and A.P. Annan. 1982b. Electromagnetic Determination of Soil Water Content Using TDR: II. Evaluation of Installation and Configuration of Parallel Transmission Lines. Soil Sci. Soc. Am. J. 46:678-684.

Topp, G.C., J.L. Davis, W.G. Bailey, and W.D. Zebchuck. 1984. The Measurement of Soil Water Content Using a Portable TDR Hand Probe. Can. J. Soil Sci. 64:313-321.

Topp, G.C., M. Yanuka, W.D. Zebchuck, and S. Zegelin. 1988. Determination of Electrical Conductivity Using Time Domain Reflectometry: Soil and Water Experiments in Coaxial Lines. Water Resources Research 16:574-582.

Towner, G.D. 1980. Theory of Time Response of Tensiometers. J. Soil Sci. 31:607-621.

Troolen, T.P., A.R. Bender, and J.H. Bischoff. 1986. The Transiometer: An Alternative Method of Soil Moisture Measurement in Slowly Permeable Soils. Ground Water Monitoring Review 6(2):99-105.

Troxler Electronic Laboratories. 1992. Moisture Determination Using the Sentry 200-AP. Troxler Application Brief. TEL, Research Triangle Park, NC, 8 pp. [Dielectric probe]

Tyler, S.W. and S.W. Wheatcraft. 1989. Application of Fractal Mathematics to Soil Water Retention Estimation. Soil Sci. Soc. Am. J. 53:987-996.

Van Duin, R. and D. DeVries. 1954. A Recording Apparatus for Measuring Thermal Conductivity, and Some Results Obtained with it in Soil. Neth. J. Agric. Sci. 2:166-175.

Van Heveren, B. 1972. Measurement of Relative Vapor Pressure in Snow with Thermocouple Psychrometers. In: Psychrometry in Water Relations Research, R. Brown and B. Van Heveren (eds.), Utah Agric. Exp. Station, Logan, UT, pp. 178-185.

Van Heveren, B. and R. Brown. 1972. The Properties and Behavior of Water in the Soil-Plant-Atmosphere Continuum. In: Psychrometry in Water Relations Research, R. Brown and B. Van Heveren (eds.), Utah Agric. Exp. Station, Logan, UT,

pp. 1-27.

Van Loon, W.K.P., E. Perfect, P.H. Groenevelt, and B.D. Kay. 1990. A New Method to Measure Bulk Electrical Conductivity in Soils with Time Domain Reflectometry. Can. J. Soil Sci. 70:403-410.

Vereecken, H., J. Diels, J. Van Orshoven, J. Feyen, and J. Bouma. 1992. Functional Evaluation of Pedotransfer Functions for Estimation of Soil Hydraulic Properties. Soil Sci. Soc. Am. J. 56:1371-1378. [Soil moisture-potential-hydraulic conductivity relationships]

Walkotten, W.J. 1972. A Recording Soil Moisture Tensiometer. Research Note PNW-180, U.S. Forest Service Pacific Northwest Experiment Station, Portland, OR.

Walsh, J., D. McQueeney, R. Layman, and H. McKim. 1979. Development of a Simplified Method for Field Monitoring of Soil Moisture. In: Proc. of 2nd Colloquium on Planetary Water and Polar Processes, U.S. Army Cold Regions Res. and Eng. Lab., Hanover, NH, pp. 40-44.

Wang, J. and T. Schmugge. 1978. An Empirical Model for the Complex Dielectric Permittivity of Soil as a Function of Water Content. NASA Tech. Memo 79659, 33 pp.

Wankiewicz, A. 1978. Water Pressure in Ripe Snowpacks. Water Resources Research 14:593-600.

Watson, K.K. 1965. Some Operating Characteristics of a Rapid Response Tensiometer System. Water Resources Research 1:577-586.

Watson, K.K. 1967. A Recording Field Tensiometer with Rapid Response Characteristics. J. Hydrology 5:33-39.

Watson, K.K. and R.D. Jackson. 1967. Temperature Effects in a Tensiometer-Pressure Transducer System. Soil Sci. Soc. Am. Proc. 31:156-160.

Wechsler, A., P. Glaser, and R. McConnell. 1965. Methods of Laboratory and Field Measurements of Thermal Conductivity of Soils. Special Rept. 82, Cold Regions Res. and Eng. Lab., Hanover, NH, 31 pp.

Weeks, L.V. and S.J. Richards. 1967. Soil Water Properties Computed from Transient Flow Data. Soil Sci. Soc. Am. Proc. 31:721-725. [Diffusivity]

Wendt, C., O. Wilke, and L. New. 1978. Use of Methanol-Water Solutions for Freeze Protection of Tensiometers. Agron. J. 70:890-891.

Wexler, A. 1965. Humidity and Moisture, Vol. 5. Reinhold, New York, NY, pp. 1-14.

White, I. 1979. Measurement of Approximate Flux-Concentration Relations for Absorption of Water by Soil. Soil Sci. Soc. Am. J. 43:1074-1079.

White, I. and K.M. Perroux. 1987. Use of Sorptivity to Determine Field Soil Hydraulic Properties. Soil Sci. Soc. Am. J. 51:1093-1101. [D(theta), K(theta), moisture characteristic curve]

White, I. and K.M. Perroux. 1989. Estimation of Unsaturated Hydraulic Conductivity from Field Sorptivity. Soil Sci. Soc. Am. J. 53:324-329.

White, I., D.E. Smiles, and K.M. Perroux. 1979. Absorption of Water by Soil: The Constant Flux Boundary Condition. Soil Sci. Soc. Am. J. 43:659-664.

Wiebe, H., G. Campbell, W. Gardner, S. Rawlins, J. Cary, and R. Brown. 1971. Measurement of Soil Water Status. Utah Agric. Exp. Station Bull. 484, Utah State Univ., Logan, UT, 71 pp.

Wiebe, H., R. Brown, and J. Barker. 1977. Temperature Gradient Effects on In Situ Hygrometer Measurement of Water Potential. Agron. J. 69:933-939.

Wilkinson, G.E. and A. Klute. 1962. The Temperature Effect on the Equilibrium Energy Status of Water Held by Porous Media. Soil Sci. Soc. Am. Proc. 26:326-329.

Williams, T. 1978. An Automatic Scanning and Recording Tensiometer System. J. Hydrology 39:175-183.

Williams, T. 1980. An Automatic Electrical Resistance Soil-Moisture Measuring System. J. Hydrology 46:385-390.

Williams, R.D., L.R. Ahuja, and J.W. Naney. 1992. Comparison of Methods to Estimate Soil Water Characteristics from Soil Texture, Bulk Density, and Limited Data. Soil Science 153:172-184.

Wilson, R.G. 1971. Methods of Measuring Soil Moisture. The Secretariat, Canadian, Nat. Comm. for the Int. Hydrol. Decade, Ottawa, Canada.

Wilson, L.G. 1980. Monitoring in the Vadose Zone: A Review of Technical Elements. EPA/600/7-80/134 (NTIS PB81-125817).

Wilson, L.G. 1981. Monitoring in the Vadose Zone: Part I. Ground Water Monitoring Review 1(3):32-41.

Wobschall, D. 1978. A Frequency Shift Dielectric Soil Moisture Sensor. IEEE Trans. on Geoscience Electronics GE-16:122-118.

Wu, T. 1964. A Nuclear Magnetic Resonance Study of Water in Clay. J. Geophys. Res. 69:1083-1091.

Yanuka, M., G.C. Topp, S.J. Zegelin, and W.D. Zebchuck. 1988. Multiple Reflections and Attenuation of TDR Pulses: Theoretical Considerations for Applications to Soil and Water. Water Resources Research 24:939-944.

Yates, S.R. and A.W. Warrick. 1987. Estimating Soil Water Content Using Cokriging. Soil Sci. Soc. Am. J. 51:23-30.

Yoshida, I., H. Kuona, and J. Chikkushi. 1985. A Study on the Prediction of a Soil Moisture Characteristic Curve from Particle-Size Distribution. J. Fac. Agric. Tottori Univ. 20:45-54.

Zanstra, P. 1976. Welding Uniform Sized Thermocouple Junction from Thin Wires. J. Physics E. Scientific Instruments 9:526-528.

Zegelin, S.J., I. White, and D.R. Jenkins. 1989. Improved Field Probes for Soil Water Content and Electrical Conductivity Measurements Using Time Domain Reflectometry. Water Resources Research 25:2367-2376.

Zollinger, W., G. Campbell, and S. Taylor. 1966. A Comparison of Water-Potential Measurements Made Using Two Types of Thermocouple Psychrometer. Soil Science 102:231-239.

SECTION 7

VADOSE ZONE HYDROLOGIC PROPERTIES (II): INFILTRATION, CONDUCTIVITY, AND FLUX

Characterization of water movement in the vadose zone is complicated by the fact that hydraulic conductivity varies as a function of pressure potential and moisture content. The introduction to Section 6 discusses the types of energy potentials that affect flow of water in the vadose zone. Various terms are used to describe hydraulic conductivity in the vadose zone:

1. **Saturated hydraulic conductivity** (K_{sat}) is the hydraulic conductivity at saturation with no entrapped air. This state rarely is achieved in the vadose zone, except, perhaps, in the zone of seasonal fluctuation of an unconfined water table.

2. **Field-saturated hydraulic conductivity** (K_{fs}), also called the **satiated** hydraulic conductivity, is the hydraulic conductivity when entrapped air is present, which can be as much as 50 percent below the true K_{sat} (Reynolds and Elrick, 1986). Methods for measuring saturated hydraulic conductivity above the water table usually measure K_{fs}. Another term, $K_{(sat)}$, has been proposed by Bouma (1982) for hydraulic conductivity measurements of the soil matrix without macropore flow (see Column-Crust method, Section 7.3.8 and Figure 7.3.8b[c]). $K_{(sat)}$ will be less than K_{sat} or K_{fs} because water flows more rapidly in macropores than in the soil matrix. The term K_{sat} often is loosely used for reporting measurements that should more accurately be termed K_{fs}.

3. **Unsaturated hydraulic conductivity** (K_{unsat}) is the hydraulic conductivity of soil at negative pressure potentials. $K(\phi)$ is the term usually used to describe the hydraulic conductivity-pressure potential function, and $K(\theta)$ to describe the hydraulic conductivity-moisture content function. Complete characterization of K_{unsat} requires measuring hydraulic conductivity at a range of moisture contents to develop a $K(\theta)$ curve or at a range of pressures to develop a $K(\phi)$ curve (see Section 6.4.1). These functions are subject to hysteresis (i.e., K_{unsat} might differ at the same water content or matric potential, depending on whether the soil is wetting or drying [Section 6.4.1]).

Infiltration

The infiltration capacity of a soil is a critical element of water budget calculations because it affects how much precipitation that reaches the ground surface enters the soil and how much moves off a site as surface runoff. The infiltration rate generally is the same as the unsaturated and saturated hydraulic conductivity, except that some processes, such as the initial moisture content (see Figure 7.1.4), crusting, or sediment clogging, might cause different infiltrations at the ground surface compared to the subsurface with all other soil factors being equal. Table 7-1 summarizes information on eight methods for measuring or estimating infiltration grouped into four categories: (1) **Impoundment** methods, where infiltration is below a water surface (Section 7.1.1); (2) **land surface** methods (Section 7.1.2), (3) **watershed** methods for estimating infiltration over larger areas (Section 7.1.3), and (4) **infiltration equations** (Section 7.1.4). In most situations infiltration can be estimated using empirical relations or infiltration equations using other measured variables, which can be measured with an air-entry permeameter (Section 7.3.4) and unsaturated hydraulic conductivity/pressure head relations (Section 6.3.1).

Measurement of Unsaturated Hydraulic Conductivity

Table 7-1 summarizes information on nine methods for measuring or estimating unsaturated hydraulic conductivity from field measurements. Most of these methods can be used to develop $K(\phi)$ or $K(\theta)$ relationships, which once established, allow subsequent monitoring to focus on either changes in pressure potential or moisture content. The **instantaneous profile** method (Section 7.2.1) is the most commonly used method for accurate measurement of unsaturated hydraulic conductivity in the field. Various **draining profile** methods (Section 7.2.2) are simpler and less expensive to use if the simplifying assumptions apply to the site of interest. Another common procedure is to collect undisturbed core samples and measure K_{unsat} in the laboratory (Klute and

Table 7-1 Summary Information on Vadose Hydraulic Conductivity Techniques[a]

Technique	K_{fs} or K_{sat}	K Direction[b]	Other Parameters Measured	Section	Tables
Infiltration (see also, Sections 7.2.3, 7.2.5, 7.2.6, 7.3.1, 7.3.4)					
Seepage Meters	Saturated	Undefined	I	7.1.1	
Instantaneous Rate	Saturated	Undefined	I	7.1.1	
Impoundment Water Budget	Saturated	Undefined	I	7.1.1	
Sprinkler Infiltrometer	Saturated	Vertical	I	7.1.2	
Infiltration Test Basins	Saturated	Undefined	I	7.1.2	
Watershed Average	Undefined	Undefined	I	7.1.3	
Watershed Empirical Relations	Undefined	Undefined	I	7.1.3	
Infiltration Equations	Both	Vertical	I	7.1.4	7-5
Unsaturated Hydraulic Conductivity					
Instantaneous Profile	Unsaturated	Vertical	D, F, K(ϕ), R	7.2.1	7-3
Draining Profile Methods	Unsaturated	Vertical	D, F, K(ϕ), R, S	7.2.2	7-3
Tension Infiltrometers	Both	Vertical	I, D, F, K(ϕ), R, S	7.2.3	7-3
Crust-Imposed Steady Flux	Unsaturated	Vertical	I, F, K(ϕ)	7.2.4	7-3
Sprinkler/Dripper Methods	Unsaturated	Vertical	I, F, K(ϕ), R, S	7.2.5	7-3
Entrapped Air Method	Unsaturated	Vertical	I, F	7.2.6	7-3
Parameter Identification	Both	Undefined	R	7.2.7	7-3
Empirical Equations	Both	Undefined	Varies	7.2.8	7-5
Column-Crust	Both	Vertical	F, K(ϕ)	7.3.8	7-4
Saturated Hydraulic Conductivity Above Shallow Water Table[c]					
Cylinder Infiltrometers	Saturated	Vertical	I, S	7.3.1	7-4
Constant Head Borehole Infiltration	Saturated	Horizontal	S	7.3.2	7-4
Guelph Permeameter	Both	Vert./Hor.	K(ϕ), S	7.3.3	7-4
Air-Entry Permeameter	Both	Vertical	I, K(ϕ), S	7.3.4	7-2, 7-4
Double Tube	Saturated	Vertical	--	7.3.5	7-2, 7-4
Cylinder Permeameter	Saturated	Vertical	--	7.3.6	7-2, 7-4
Infiltration Gradient	Saturated	Vertical[d]	--	7.3.7	7-4
Cube	Saturated	Vert./Hor.	--	7.3.8	7-2, 7-4
Column/Monoliths	Saturated	Vertical	--	7.3.8	7-2, 7-4
Boutwell Method	Saturated	Vert./Hor.	--	7.3.9	
Velocity Permeameter	Saturated	Vertical	--	7.3.10	
Percolation Test	--[e]	--[e]	--	7.3.11	7-4
CP Porous Probe	Saturated	Horizontal	--	2.2.2	
Collection Lysimeter	Saturated	Vertical	F	9.3.1	
Saturated Hydraulic Conductivity Above Deep Water Table[c]					
USBR Single Well	Saturated	Undefined	--	7.4.1	
USBR Multiple-Well	Saturated	Horizontal	--	7.4.2	
Stephens-Neuman Single Well	Saturated	Undefined	--	7.4.3	
Air Permeability	Saturated	Undefined	--	7.4.4	
Packer Tests	Saturated	Vert/Hor.	--	4.3.3	

D = diffusivity; F = Flux; I = Infiltration; K(ϕ) = hydraulic conductivity-pressure head relationship; R = Retention (pressure-moisture relationship); S = Sorptivity.

[a]Most methods for measuring or estimating unsaturated hydraulic conductivity also can be used to measure water flux in the vadose zone. Section 7.5 discusses the application of these and other methods for measuring soil water flux.
[b]Directional ratings are qualitative in nature. Different references might give different ratings depending on site conditions and criteria used to define directionality.
[c]These methods measure field-saturated or satiated hydraulic conductivity (K_{fs}), which is lower than saturated hydraulic conductivity, due to the presence of entrapped air.
[d]Differentiation of vertical and horizontal is possible when used with double tube method.
[e]The percolation test does not provide an accurate measure of saturated hydraulic conductivity. See Table 7-4 for sources on information on the relationship between percolation test results and K_{sat}.

Dirksen, 1986). ASTM (1990a) provides guidance on selecting field methods for measuring unsaturated hydraulic conductivity in the vadose zone.

Measurement of Saturated Hydraulic Conductivity

Table 7-1 summarizes information on 10 methods for measuring K_{fs} above a shallow water table (Section 7.2), and 5 methods for measuring K_{fs} above a deep water table (Section 7.3). The **cylinder** or **ring** infiltrometer (Section 7.3.1) is a widely used method that measures both infiltration and K_{fs} at the soil surface. Most other shallow methods require a borehole and devices at the surface to control the flow of water into the hole to achieve steady state infiltration before measurements are taken. The **constant-head borehole infiltration** or **shallow-well pump-in** method (Section 7.3.2) and the **Guelph permeameter** (Section 7.3.3) probably are the most commonly used methods for measuring K_{fs}. Most of these methods are restricted to depth of 2 meters or less, but recently developed **compact constant-head permeameter** (Section 7.3.2) can be used to depths of 10 meters. Most methods for measuring K_{fs} above a deep water table require drilling or relatively large diameter boreholes (at least 6 inches) and a large supply of water, which can be pumped into the borehole. ASTM (1990a) provides guidance on selecting field methods, for measuring saturated hydraulic conductivity in the vadose zone, and Table 7-2 provides comparative information on nine methods for measuring saturated hydraulic conductivity above and below a water table.

Measurement of Water Flux in the Vadose Zone

Various methods are available to measure or estimate the amount of water that passes through the vadose zone and enters the ground-water system. A **water budget** (Section 7.5.1) uses a mass balance by measuring inflows, outflows, and storage changes in the area of interest. More often, a simplified water budget approach can be used, in which only changes in **soil moisture** or **matric potential** are measured (Section 7.5.2). A variety of **tracers**, such as chloride and tritium, can be used to estimate the rate of recharge and water flux (Section 7.5.3). Localized water flux can be measured using a **soil-water flux meter** (Section 7.5.4). A variety of methods for measuring the **velocity** of water flow in the vadose zone are described in Section 7.5.5. Finally, a variety of physical and empirical equations can be used in combination with the methods above, or using site-specific data on hydraulic conductivity or soil physical characteristics, such as texture and bulk density. **Tile drains** or **collection lysimeters** (Section 9.3.1) also can be used to measure water flux in the vadose zone, provided the area of vertical infiltration is known and lateral ground-water flow can be excluded or quantified.

Table 7-2 Operational Aspects of Nine Methods for Measuring Saturated Hydraulic Conductivity

K_{sat} Method	Direction: horizontal	Direction: vertical	Direction: undefined	Below groundwater	Above groundwater	Time: preparation	Time: execution	Time: calculation	Costs: personnel	Costs: materials	Complexity	Accuracy
Column method		•		(•)	•							
Cube method	•	•		(•)	•							
Drain-cube method		•		•								
Air entry perm.		•			•							
Cylinder perm.		•			•							
Double-tube		•			•							
Augerhole method			•	•								
Piezometer method			•	•								
Four-holes method			•	•								

Source: Amoozegar and Warrick (1986), after Bouma (1983)

Dirksen, 1986). ASTM (1990a) provides guidance on selecting field methods for measuring unsaturated hydraulic conductivity in the vadose zone.

Measurement of Saturated Hydraulic Conductivity

Table 7-1 summarizes information on 10 methods for measuring K_{fs} above a shallow water table (Section 7.2), and 5 methods for measuring K_{fs} above a deep water table (Section 7.3). The **cylinder** or **ring** infiltrometer (Section 7.3.1) is a widely used method that measures both infiltration and K_{fs} at the soil surface. Most other shallow methods require a borehole and devices at the surface to control the flow of water into the hole to achieve steady state infiltration before measurements are taken. The **constant-head borehole infiltration** or **shallow-well pump-in** method (Section 7.3.2) and the **Guelph permeameter** (Section 7.3.3) probably are the most commonly used methods for measuring K_{fs}. Most of these methods are restricted to depth of 2 meters or less, but recently developed **compact constant-head permeameter** (Section 7.3.2) can be used to depths of 10 meters. Most methods for measuring K_{fs} above a deep water table require drilling or relatively large diameter boreholes (at least 6 inches) and a large supply of water, which can be pumped into the borehole. ASTM (1990a) provides guidance on selecting field methods, for measuring saturated hydraulic conductivity in the vadose zone, and Table 7-2 provides comparative information on nine methods for measuring saturated hydraulic conductivity above and below a water table.

Measurement of Water Flux in the Vadose Zone

Various methods are available to measure or estimate the amount of water that passes through the vadose zone and enters the ground-water system. A **water budget** (Section 7.5.1) uses a mass balance by measuring inflows, outflows, and storage changes in the area of interest. More often, a simplified water budget approach can be used, in which only changes in **soil moisture** or **matric potential** are measured (Section 7.5.2). A variety of **tracers**, such as chloride and tritium, can be used to estimate the rate of recharge and water flux (Section 7.5.3). Localized water flux can be measured using a **soil-water flux meter** (Section 7.5.4). A variety of methods for measuring the **velocity** of water flow in the vadose zone are described in Section 7.5.5. Finally, a variety of physical and empirical equations can be used in combination with the methods above, or using site-specific data on hydraulic conductivity or soil physical characteristics, such as texture and bulk density. **Tile drains** or **collection lysimeters** (Section 9.3.1) also can be used to measure water flux in the vadose zone, provided the area of vertical infiltration is known and lateral ground-water flow can be excluded or quantified.

7. VADOSE ZONE HYDROLOGIC PROPERTIES (II): INFILTRATION, CONDUCTIVITY, AND FLUX

7.1 INFILTRATION

7.1.1 Impoundment Methods

Other Names Used to Describe Method: Seepage meters (SCS, USBR, Bouwer-Rice), instantaneous rate method, water budget method.

Uses at Contaminated Sites: Measuring infiltration of surface water impoundments into the ground.

Method Description: **Seepage** meters are sealed infiltrometers placed in the bottom of a channel or pond that is connected by a tube to a small reservoir of water in a container, which can be raised or lowered in relation to the water surface of the impoundment (Figure 7.1.1). When the small reservoir is raised above the level of the natural water surface, the rate of fall is measured, or relative changes in pressure head inside the seepage meter and the water outside are measured. Infiltration rate can be calculated from these measurements. Types include the SCS, U.S. Bureau of Reclamation, and Bouwer-Rice seepage meters. The **instantaneous rate** method involves shutting down all inflows and discharges from a pond and observing the drop in water level. Assuming evaporation is negligible and there is no ground-water recharge to the pond, the rate of decline in water level is the infiltration (Wilson, 1982). The **water budget** method requires measurement of inflow to the pond from all sources, precipitation, discharge, and evaporation, and the relationship between head vs. surface area. When these parameters are known, infiltration can be solved from the water budget equation (Bouwer, 1978). Section 7.5.1 discusses the water budget method further, and Figure 7.5.1 illustrates an annual cumulative water balance used to determine seepage from a wastewater lagoon. Other methods for characterizing interactions between surface impoundments and ground-water systems include shoreline monitoring wells, mini-piezometers, well points, and core samples (Wolf et al., 1991).

Method Selection Considerations: Table 7.1.1 provides some general guidelines for selecting techniques for evaluating surface-ground water interactions. **Seepage Meter Advantages:** Relatively inexpensive and simple to operate. **Seepage Meter Disadvantages:** (1) A large number of measurements are required to obtain average infiltration rates, especially in unlined ponds with variable texture; (2) some underwater work is required to install the unit, which might be hazardous to personnel in waste ponds with toxic chemical; (3) measurements must be obtained on sides and bottoms of ponds and installation is difficult in ponds with steep-sided slopes; and (4) cannot be used in frozen ponds. **Instantaneous Rate Advantages:** Simple and inexpensive way to measure average infiltration rate. **Instantaneous Rate Disadvantages:** Results might be inaccurate if there is ground-water recharge or rates of decline are slow enough for evaporation to become significant. **Water Budget Advantages:** Can be used in most hydrogeologic settings. **Water Budget Disadvantages:** (1) Time consuming and expensive; (2) will not work where the water table is able to rise above the level of water in the pond; (3) requires accurate estimation of evaporation, which is not easy, especially if impoundment contains chemicals that change evaporation properties; (4) installing inflow and outflow measuring devices might be difficult at some sites; (5) errors in measurements of any auxiliary parameter affect the accuracy of estimated infiltration; and (6) calculation of changes in storage is difficult where water levels change slowly (can be overcome with special techniques for very accurate measurement such as laser equipment).

Frequency of Use: Seepage meters are most commonly used. Water budget is rarely used due to complexity and cost.

Standard Methods/Guidelines: **Seepage meter:** Bouwer and Rice (1963); **Water budget:** Bouwer (1978).

Sources for Additional Information: **Seepage meter:** Bouwer (1978, 1986), Kraatz (1977), Wilson (1982); **Other:** Everett et al. (1983), Wilson (1982), Wolf et al. (1991).

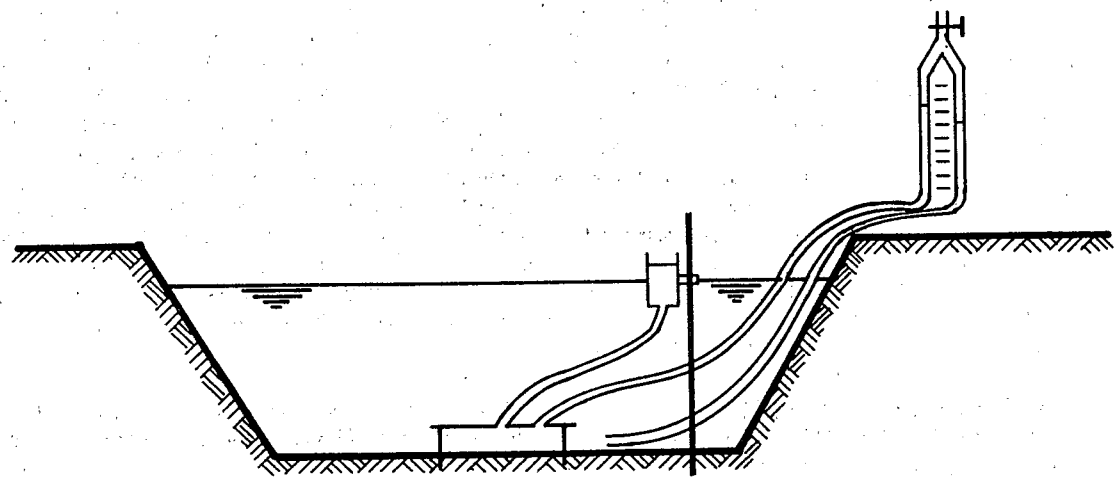

Figure 7.1.1 Schematic of seepage meter in open channel with a falling-level reservoir and U-tube manometer (Bouwer, 1986, by permission).

Table 7.1.1 Guidelines for Selecting Techniques to Assess Ground-Surface Water Interactions

Use	Shoreline Monitoring Well	Seepage Meter	Mini-Piezometer	Well Point	Core Sample
Determination of hydraulic gradient	B, C	NA	A	A	NA
Determination of hydraulic conductivity of sediments	B, C	B, C	C	A	C
Flux between ground water/surface water systems	D	C	B, C	B, C	NA
Determination of long term interaction of ground and surface water	B	D	C	B	NA
Collection of flux samples for field screening analysis	C	C	A	A	NA
Collection of flux samples for lab analysis	C	D	C	A	NA
Estimation of sediment transport properties	NA	NA	C (porosity only)	C (porosity only)	A

NA - not applicable
A - good performance in most conditions
B - acceptable when used in conjunction w/ another technique
C - acceptable under certain conditions
D - poor choice

Source: Wolf et al. (1991), by permission

7. VADOSE ZONE HYDROLOGIC PROPERTIES (II): INFILTRATION, CONDUCTIVITY, AND FLUX

7.1 INFILTRATION

7.1.2 Land Surface Methods*

Other Names Used to Describe Method: Infiltration test basins, sprinkler infiltrometer, cylinder infiltrometer.

Uses at Contaminated Sites: Measuring of ground-water recharge; determining soil infiltration capacity for land treatment of wastewater; calculating sorptivity (sprinkler infiltrometer [see also, Section 6.4.2]).

Method Description: **Infiltration test basins:** Large cylinder infiltrometers (Figure 7.1.2a and b) or basins (20 feet by 20 feet) are constructed at several locations in a field and flooded with water. Measurements are similar to cylinder infiltrometer for measuring infiltration rates. **Sprinkler infiltrometer:** Nozzles or drop-formers are used to simulate the size and fall velocity of natural raindrops over a plot, which is set up so that surface runoff can be accurately measured (see also, Section 7.2.5 and Figure 7.2.5). The difference between the amount of water applied and the surface runoff is the infiltration rate.

Method Selection Considerations: Infiltration can be estimated using empirical relations or infiltration equations (Section 7.1.4), using other measured variables that can be measured with an air-entry permeameter (Section 7.3.4), and from soil moisture content, if the $K(\phi)$ relationship is known (see Section 6.4.1). **Infiltration test basins** are relatively simple and provide more representative measurements than cylinder infiltrometers, but are relatively expensive, time consuming, and water availability can be a problem. **Sprinkler infiltrometers** are relatively complex, expensive to operate, and are not well adapted to routine field applications. Relatively recent developments of more portable equipment might make this a more attractive method (see Section 7.2.5).

Frequency of Use: Test basins are used primarily for the design of full-scale projects for the land treatment of municipal wastewater. Sprinkler infiltrometers have been widely used in agricultural research, but have not been commonly used for contaminated site characterization.

Standard Methods/Guidelines: **Sprinkler infiltrometer:** Peterson and Bubenzer (1986), **Test basin:** U.S. EPA (1981).

Sources for Additional Information: Dunne and Leopold (1978), Thompson et al. (1989), Wilson (1982). **Sprinkler infiltrometers:** Bertrand (1965), Clothier et al. (1981b), Dunne and Leopold (1978), Grierson and Oades (1977), Hamon (1979), Parr and Bertrand (1960), Peterson and Bubenzer (1986), Sidle (1979), Tovey and Pair (1963), U.S. EPA (1981), Zegelin and White (1982). Peterson and Bubenzer (1986) summarize information on over 30 rainfall simulator and sprinkler-infiltrometer studies and cite 66 references, which are not listed here on this topic. See also, Section 7.2.5. **Cylinder infiltrometers:** Bureau of Reclamation (1978), Haise et al. (1956), Hills (1971), Parr and Bertrand (1960); See also, Section 7.3.1 and Table 7-4. **Test basins:** Abele et al. (1980), Nielsen et al. (1973), Parr and Bertrand (1960), U.S. Army Corps of Engineers (1980).

*See also, cylinder infiltrometers (Section 7.3.1).

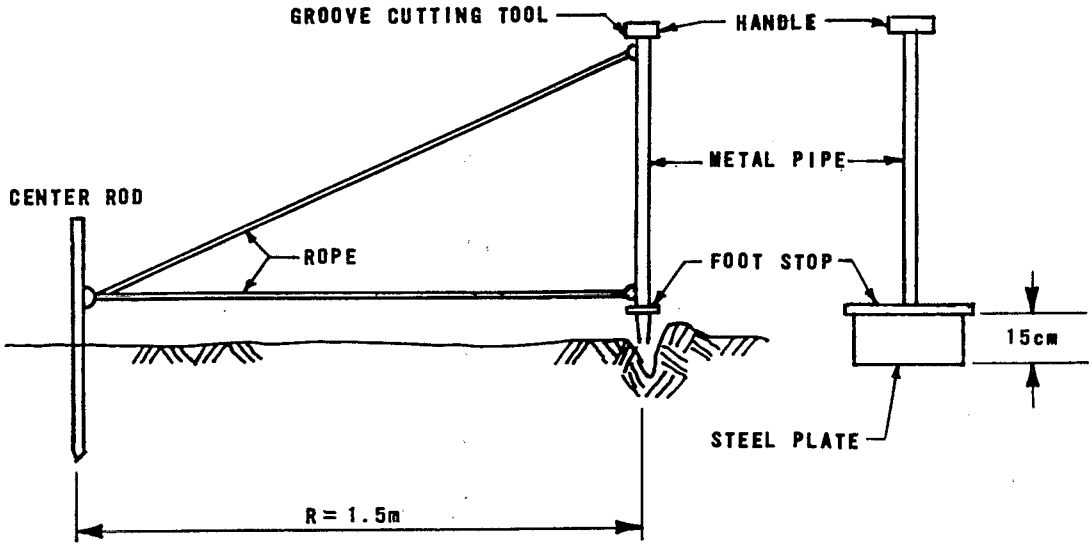

(a)

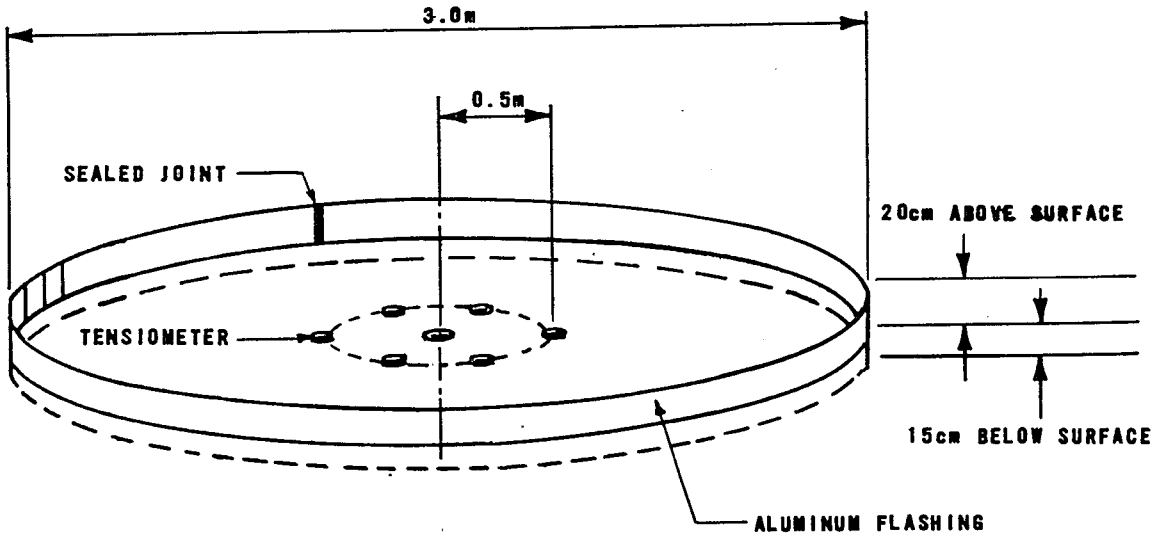

(b)

Figure 7.1.2 Infiltration test basin: (a) Groove preparation for flashing (berm); (b) Schematic of finished installation (U.S. EPA, 1981, after U.S. Army Corps of Engineers, 1980).

7. VADOSE ZONE HYDROLOGIC PROPERTIES (II): INFILTRATION, CONDUCTIVITY, AND FLUX

7.1 INFILTRATION

7.1.3 Watershed Methods

Other Names Used to Describe Method: Average infiltration method, point infiltration method, empirical relations.

Uses at Contaminated Sites: Estimating infiltration over large areas for water budget studies.

Method Description: **Average infiltration method:** Infiltration is estimated by measuring the rainfall duration and intensity from individual precipitation events, and subtracting the measured runoff. The difference between the two values is assumed to be the infiltration. Figure 7.1.3 illustrates how infiltration capacity curves are developed for a small watershed. **Empirical relationships:** Musgrave and Holtan (1964) have grouped soils into four basic classes and summarized infiltration rates for a large number of different soil types within these classes. The U.S. Soil Conservation Service has used this classification system to develop some empirical relationships for estimating infiltration based on soil-vegetation types to approximate infiltration over large watershed areas (SCS, 1975). Huggins and Monke (1966) developed an empirical infiltration equation in which infiltration is a function of soil moisture. Rankl (1990) has developed a **point infiltration** watershed model for estimating runoff using infiltration estimates based on soil types and several empirical infiltration parameters.

Method Selection Considerations: Methods for estimating infiltration in watersheds generally do not have enough accuracy for site specific applications. Empirical relationships might be useful when combined with limited infiltrometer measurements to obtain a gross approximation of infiltration.

Frequency of Use: Uncommon, mainly because site investigations tend to cover areas that are smaller than entire watersheds.

Standard Methods/Guidelines: --

Sources for Additional Information: **Average infiltration method:** Dunne and Leopold (1978); **Empirical relations:** Bras (1990-Huggins-Monke and SCS methods), Huggins and Monke (1966), Musgrave and Holtan (1964), Rankl (1982, 1990), SCS (1975); **Other:** Parr and Bertrand (1960).

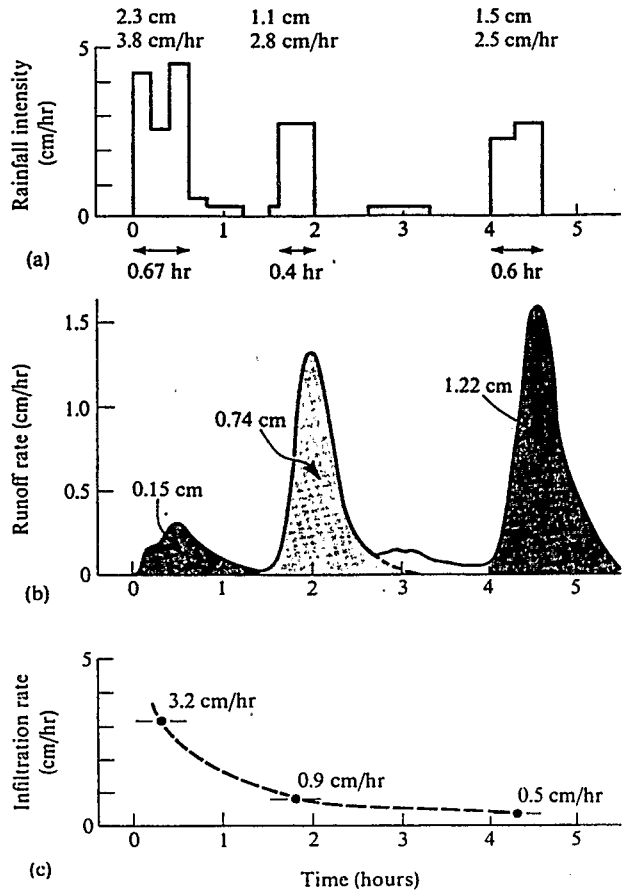

Figure 7.1.3 **Average infiltration method of computing an infiltration capacity curve for a small drainage basin (Dunne and Leopold, 1978). Bursts of rainfall plotted in the upper diagram (a) cause separate hydrograph rises (b). Each burst provides one point on the infiltration capacity curve (c). (From: *Water in Environmental Planning* by Dunne and Leopold, Copyright © 1978 by W.H. Freeman and Company, reprinted with permission).**

7. VADOSE ZONE HYDROLOGIC PROPERTIES (II): INFILTRATION, CONDUCTIVITY, AND FLUX

7.1 INFILTRATION

7.1.4 Infiltration Equations

Other Names Used to Describe Method: Green-Ampt, Richards, Philip equations (numerous other solutions and refinements have been derived from these equations); parametric infiltration equations; Horton equation; Huggins-Monke equation (see Section 7.1.3).

Uses at Contaminated Sites: Obtaining indirect estimations of soil infiltration rates.

Method Description: An alternative to direct measurement of infiltration is to measure variables required for analytical equations, such as the Richards', Green-Ampt, and Philip's equations. Variables typically required for these equations include the hydraulic conductivity of the wetted zone, pressure head at the wetting front, and sorptivity of the soil. Most of these variables can be measured in situ with an air entry permeameter (Section 7.3.4), from unsaturated hydraulic-conductivity/pressure head relations (Section 6.3.1), and from infiltrometer measurements (Section 7.3.1). When estimating infiltration, it also is important to take the initial water content of the soil into account. Infiltration rates in a dry soil will be initially higher, and take a longer time to reach saturated hydraulic conductivity than infiltration into a soil that already is relatively wet (Figure 7.1.4). The **Horton** empirical equation for infiltration has been commonly used by hydrologists, but has a basic problem in that it does not satisfy the theoretical requirement that the initial infiltration be of infinite value. It might be suitable for describing infiltration when water is applied by rain or sprinkling for short time periods. Most infiltration equations have been derived from the study of soil physics. The **Green-Ampt** equation is satisfactory for describing infiltration into initially dry coarse-textured soils, and requires data on the hydraulic conductivity of the wetted zone and an estimate of the critical pressure head of soil for wetting. The **Philip's** equation is a two-parameter algebraic equation derived from the **Richards'** basic partial differential equation for unsaturated flow, and requires measurement or estimation of sorptivity and an infiltration curve. Numerous solutions and refinements of the basic Green-Ampt and Richards' equations have been developed in recent years, as well other approaches, such as parametric infiltration equations. Each equation or model has its own assumptions and soil moisture conditions that must be satisfied. For example, the Broadbridge-White model (Broadbridge and White, 1988) spans a wide range of known soil hydraulic properties. Table 7-5 identifies over 50 references dealing with equations and models for infiltration and unsaturated flow in the vadose zone and this literature should be reviewed to identify the most appropriate equation or model.

Method Selection Considerations: All infiltration equations require field measurement and characterization of the spatial variability of the required parameters for accurate estimation of infiltration. **Advantages:** Might be the best method for evaluating vertical infiltration rates of soils that contain restricting layers at some depth. **Disadvantages:** If infiltrating water contains sediment or suspended solids, the reduction infiltration rate due to the accumulation of solids on the soil surface must be estimated.

Frequency of Use: The Green-Ampt and Philip's equations are probably the most commonly used. As noted above, numerous refinements and alternatives to these equations, which might merit consideration, have been developed in recent years.

Standard Methods/Guidelines: --

Sources for Additional Information: Bouwer (1986), Green and Ampt (1911), Philip (1957a, 1969), Thompson, et al. (1989). See also, references in Table 7-5 and Section 7.2.8 (Unsaturated Hydraulic Conductivity, Physical/Empirical Equations and Relationships).

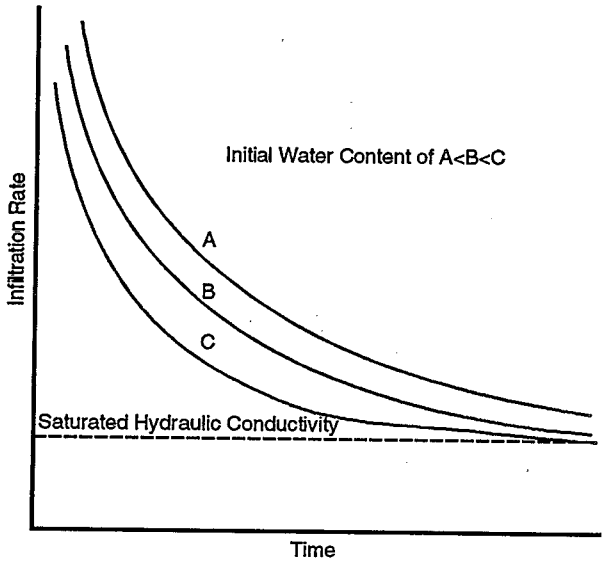

Figure 7.1.4 The effect of the initial water content of soil on infiltration rates (Everett et al., 1983).

7.2 UNSATURATED HYDRAULIC CONDUCTIVITY

7.2.1 Instantaneous Profile Method

Other Names Used to Describe Method: Unsteady drainage flux, plane of zero flux, instantaneous rate method, hot-air method (Arya et al., 1975, as cited by Bouma, 1982).

Uses at Contaminated Sites: Measuring unsaturated hydraulic conductivity and diffusivity for vadose zone contaminant transport evaluation. Also can be used for monitoring water flux (Section 7.5.2) and developing moisture characteristic curves (Section 6.3.1) or K-matric potential relationships.

Method Description: A field plot (Figure 7.2.1a) or a double-ring infiltrometer is placed on a soil plot (Figure 7.2.1b) and instrumented with a battery of tensiometers at different depths for measuring water pressures (see Section 6.2.1) and an access tube for neutron moisture logging (see Section 3.3.3 and 6.3.2). The soil is wetted to saturation throughout the study depth. Wetting is stopped and the surface covered to prevent evaporation. Water pressure and water content are measured at intervals as the soil drains. Any combination of methods for measuring soil water potential (see Section 6.2) and soil moisture content (see Section 6.3 and Table 6-1) can be used for this method. **Tensiometer/soil core method:** A variant of the instantaneous profile method in which only changes in soil water pressure are monitored in the field after the soil is wetted. Soil cores are collected from the depth increments that tensiometers have been placed and moisture characteristic curves are measured in the laboratory. Hydraulic conductivity at different matric potentials is calculated from the field-measured tensiometer data and the moisture characteristic curve. The entrapped air method (Section 7.2.6) also can be considered a variant of this method.

Method/Device Selection Considerations: **Instantaneous Profile Advantages:** (1) Simple and reasonably accurate at each measuring site; and (2) suitable for stratified soils. **Instantaneous Profile Disadvantages:** (1) Provides hydraulic conductivity values only for draining profiles and values will be different during wetting cycles; (2) time consuming and relatively expensive, especially if site variability requires a large number of sites to obtain mean values; (3) does not provide reliable data near saturation (0 to -15 centimeters) because of rapidly changing and poorly defined pressure head gradients; (4) primarily measures vertical conductivity and will underestimate flux if horizontal conductivity exceeds vertical conductivity; (5) interactions between wastewater and solids might affect results (such as dispersion of clays or clogging); and (6) not suitable for percolating water with sufficient concentration of chemical wastes (such as nonaqueous phase liquids) to change its physical properties that affect infiltration rates. **Tensiometer/Soil Core Advantages:** Similar to instantaneous profile method except that field data collection is less time consuming and expensive because only soil-water pressure is monitored. **Tensiometer/Soil Core Disadvantages:** Similar to instantaneous profile method, except that use of laboratory measurements on soil cores might not accurately reflect in situ conditions.

Frequency of Use: Probably the most commonly used field method for accurate measurement of unsaturated hydraulic conductivity.

Standard Methods/Guidelines: ASTM (1990a), Bouma et al. (1974), Green et al. (1986).

Sources for Additional Information: Bouwer and Jackson (1974), Everett et al. (1982, 1983), Hendrickx (1990), Thompson et al. (1989), Wilson (1980). See also, Table 7-3.

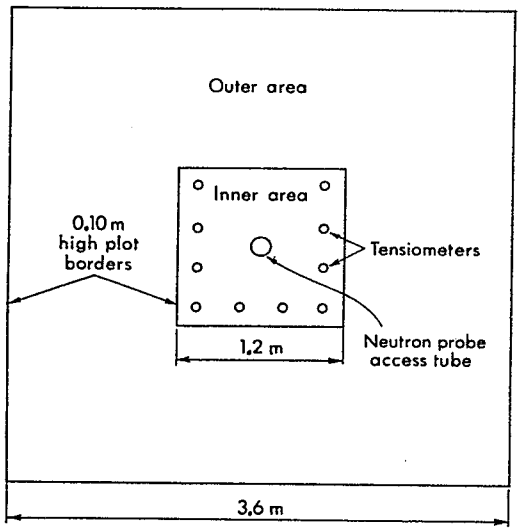

(a)

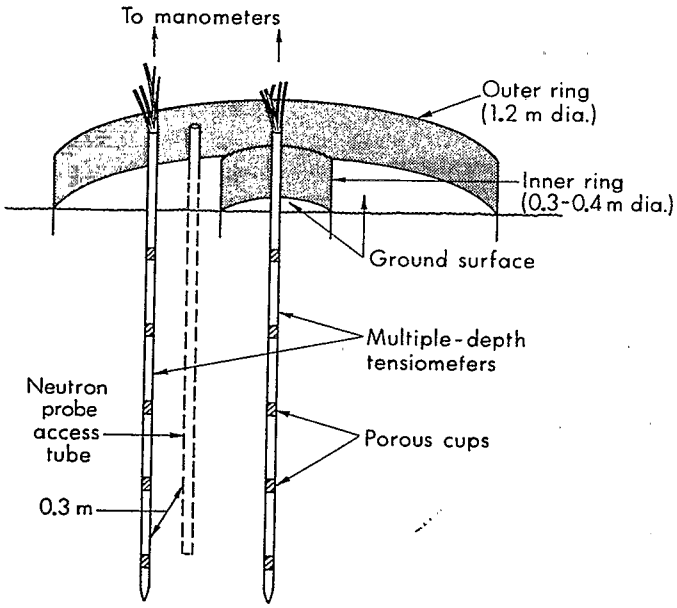

(b)

Figure 7.2.1 **Instantaneous profile method: (a) Planar view of field plot; (b) Double-ring infiltrometer with multiple-depth tensiometers (Green et al., 1986, by permission).**

7.2 UNSATURATED HYDRAULIC CONDUCTIVITY

7.2.2 Draining Profile Methods

Other Names Used to Describe Method: Simplified unsteady drainage flux method, unit gradient method, Theta (θ) method, flux method, CGA-method, water content measurement method (flux), tensiometric simplified functions method.

Uses at Contaminated Sites: Estimating unsaturated hydraulic conductivity and flux of water in the vadose zone.

Method Description: **Unsaturated hydraulic conductivity:** A number of approaches have been developed to simplify the instantaneous profile method so that only soil moisture content or soil water potential needs to be monitored in the field. Procedures are similar to the instantaneous profile method in that the soil is wetted until steady-state infiltration (field saturated) conditions are reached at the test plot or double-ring infiltrometer, at which time wetting is stopped and the surface covered to prevent evaporation. Changes in the draining profile are observed as a function of time either by monitoring soil water content at different depths, or by monitoring soil matric potential at different depths. Different equations are used to calculate hydraulic conductivity as a function of soil water content. In the **theta (θ)** method, changes in soil water content with time at different depths are used in the calculations. Figure 7.2.2a illustrates use of this method for a single soil horizon. In the **flux-** and **CGA-**methods, different formulas involving changes in average water content over the depth of interest are used. In the **pressure profile** method, tensiometric measurements taken over time at small depth increments are used to calculate hydraulic conductivity as a function of soil-water suction (Figure 7.2.2b). **Flux in the vadose zone:** Monitoring of changes in water content over time (neutron logging, tensiometers, resistance blocks, and psychrometers) allows calculation of the water flux for a given depth (Wilson 1980, 1982). See Section 7.5.2 for further discussion of flux measurement using these methods.

Method Selection Considerations: **Moisture Profile Advantages:** (1) Simpler instrumentation allows measurements to be made at more points than with more complex methods, allowing statistical analysis to characterize soil variability; and (2) works well on coarse- and fine-textured homogenous materials. **Moisture Profile Disadvantages:** (1) Point measurements are less accurate than instantaneous profile and crust methods; (2) most methods assume a unit hydraulic gradient and will not work if the assumption does not apply; and (3) separate measurements of matric potential-water content relationships are required. **Pressure Profile Advantages:** (1) Simpler instrumentation allows measurements to be made at more points than with more complex methods, allowing statistical analysis to characterize soil variability; (2) the assumption of unit hydraulic gradient is not required; (3) measurement of matric potential-water content relationships are not required; (4) a one-time measurement of the soil water content profile allows estimates of drainage fluxes and soil water storage in the profile with time and as a function of average matric potential; and (5) works well in coarse- and fine-textured soils and soil profiles with stratification. **Pressure Profile Disadvantages:** (1) Point measurements are less accurate than instantaneous profile and crust methods; (2) reliable, frequent tensiometric data at small time and depth intervals, especially at low suctions, are required; (3) accurate determination of the representative field-saturated hydraulic conductivity is required; and (4) curves are somewhat less accurate for depths greater than around 100 centimeters. **General Disadvantages:** (1) Generally requires uniform drainage over shallow water tables (in deeper soils the upper profile can be draining while the lower profile is wetting, so flux will not equal drainage); (2) chemical conditions affecting methods to measure water content changes might introduce errors (i.e., chlorine in solution affecting neutron logging); (3) drainage in well-structured soils might occur more rapidly than in soil blocks where water content changes are measured, resulting in underestimation of water flux; and (4) a large number of measurements is required to characterize spatial variability.

Frequency of Use: Relatively new methods with good potential for more extensive field application due to their relative simplicity.

Standard Methods/Guidelines: **θ and flux methods:** Libardi et al. (1980); **CGA-method:** Chong et al. (1981); **Pressure profile:** Ahuja et al. (1988). See also, Section 7.2.7 (Parameter Identification).

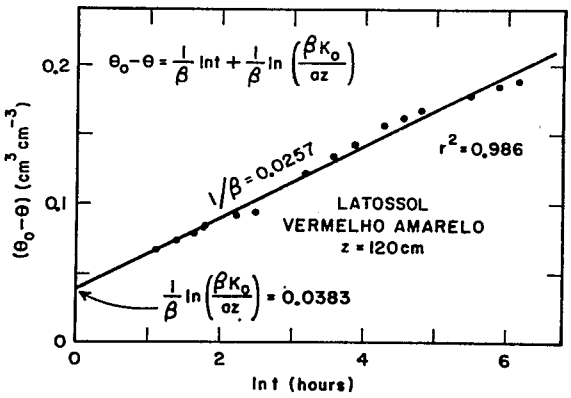

(a)

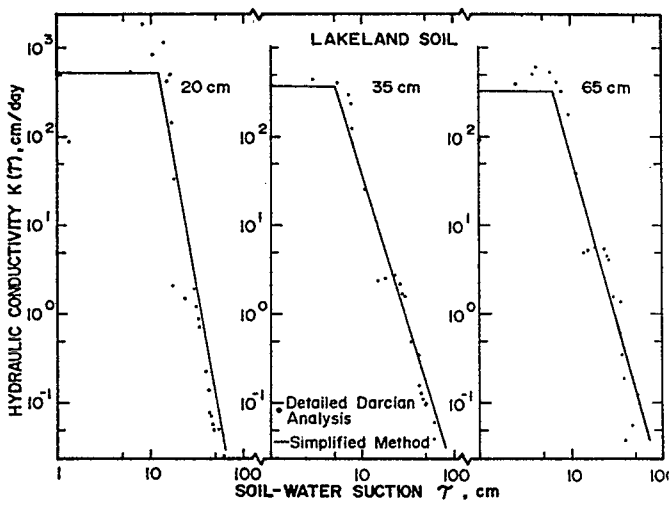

(b)

Figure 7.2.2 **Draining profile methods: (a) Theta method involves plotting the change in water content over time to determine empirical constant beta--hydraulic conductivity at any water content can then be calculated if steady state water content (θ_o) and steady state hydraulic conductivity (k_o) are known (Libardi et al., 1980, by permission); (b) Hydraulic conductivity as a function of soil-water suction: Calculations using the pressure profile method compared to detailed Darcian analysis (Ahuja et al., 1988, by permission).**

Sources for Additional Information: Everett et al. (1983), Green et al. (1986), Hendrickx (1990), Wilson (1980, 1982). See also, Table 7-3.

7.2.3 Tension Infiltrometers

Other Names Used to Describe Method: Tension disc permeameter, suction permeameter, porous plate infiltrometer, Guelph infiltrometer, sorptivity method.

Uses at Contaminated Sites: Measuring infiltration, sorptivity, hydraulic conductivity; characterizing macropore soil water flow and mean pore size.

Method Description: The tension infiltrometer originally was developed to measure soil sorptivity and diffusivity (see Section 6.3.2), but relatively recent improvements in instrument design (Figures 7.2.3a and b) have made this a versatile device for measuring and estimating a variety of soil hydrologic properties. The **tension disc permeameter** has three main components: (1) A nylon membrane that rests on the ground surface, (2) a calibrated reservoir, and (3) a bubble tower, which is used to control the starting tension in the calibrated reservoir (Figure 7.2.3a). At the beginning of the test, the water reservoir is full of water, and the water level in the bubble tower is set at a height to achieve the desired starting tension. The stopcock in the bubbler tower is opened to start the test, allowing air to enter the reservoir as water moves through the membrane into the soil. Multiple tests can be run in several ways by varying: (1) The starting tension, (2) the pore size of the nylon membrane, and (3) the size of the disc-membrane. Sorptivity is calculated from the rate at which the water level in the calibrated reservoir falls during the first 3 minutes, and hydraulic conductivity is determined when the infiltration rate reaches a steady flux. Measurements of sorptivity and hydraulic conductivity at different starting tensions allows development of a hydraulic conductivity-matric potential curve. The **positive pressure permeameter** (Figure 7.2.3b) looks similar to the tension permeameter, but operates quite differently. The unit is attached to a stainless steel cylinder, which is driven far enough into the ground to prevent water from leaking around the side. The supply pressure is the distance between the air bubble exit point and the soil surface, and can be adjusted by screws. The air entry side tube is filled with enough water to fill the space between the central water reservoir and the soil. This water is rapidly deposited on the soil surface by opening the side tube stopcock to start infiltration, and the rate of fall of water in the central calibirated water reservoir is measured.

Method Selection Considerations: **Advantages:** (1) Simpler than instantaneous profile, draining, and steady-flux methods because knowledge of initial water potential or content is not required, which eliminates requirements for installation of tensiometer or neutron access probes not required; (2) lower cost than more complex methods allows more extensive characterization of spatial variability of soil hydraulic characteristics; (3) rings do not need to be driven into the soil surface, avoiding possible disturbance of soil structure and allowing use of the method on rocky soils; and (4) control of tension at the surface allows characterization of flow in different pore sizes. **Disadvantages:** (1) Accurate measurements might be difficult in very wet and highly permeable soils; (2) methods requiring solution of simultaneous equations might be susceptible to errors resulting from soil heterogeneity; (3) measurements with instruments using different radii surface disks might be affected by spatial variability associated with different soil surfaces; and (4) measurements sample a relatively shallow depth of the soil surface (different depths can be tested by excavation, but the process become more cumbersome and time-consuming).

Frequency of Use: Tension infiltrometers have gained rapid acceptance in the last few years and are likely to become a standard tool for in situ determination of saturated and near-saturated soil hydraulic properties near the soil surface.

Standard Methods/Guidelines: Perroux and White (1988).

Sources for Additional Information: See Table 7-3.

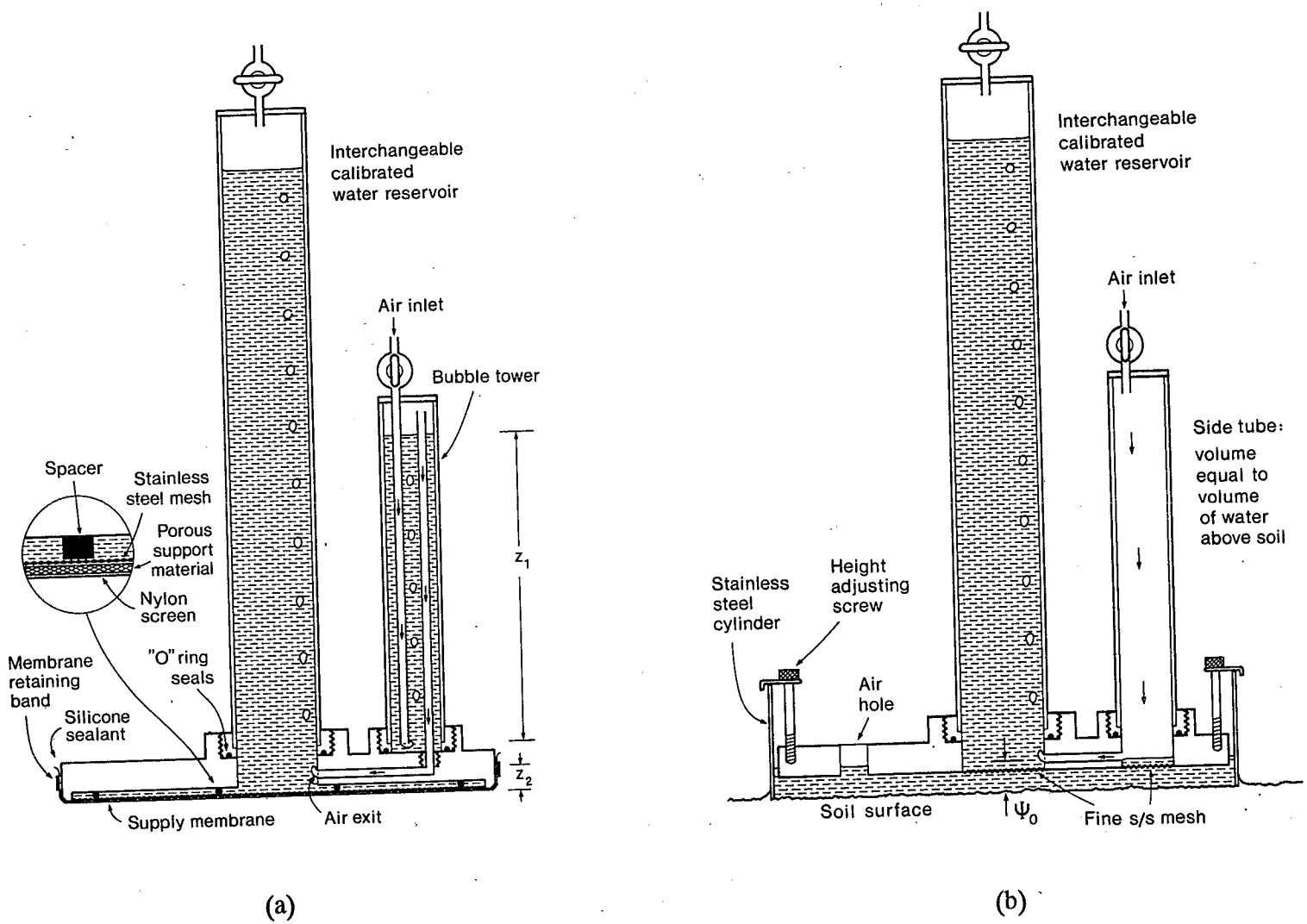

Figure 7.2.3 Disc permeameters: (a) For supplying water at pressures less than or equal to zero; (b) For supplying water at positive pressures (Perroux and White, 1988, by permission).

7.2 UNSATURATED HYDRAULIC CONDUCTIVITY

7.2.4 Crust-Imposed Steady Flux

Other Names Used to Describe Method: Unit-hydraulic gradient method, crust test.

Uses at Contaminated Sites: Measuring vertical unsaturated hydraulic conductivity during wetting portion of moisture characteristic curve.

Method Description: A pedestal soil about 25 cetimeters in diameter and 30 centimeters high is exposed by excavation, the exterior of which is covered with aluminum foil, and a tensiometer is inserted into the pedestal (Figure 7.2.4). Crusts with varying hydraulic conductivity by varying percentages of gypsum and sand or sand and quick-setting hydraulic cement. Each test run uses a crust placed on the soil surface, which is then covered by an infiltration ring with an air-tight cover, which fits tightly over the pedestal. A water source supplies water to the infiltration ring assembly at a constant head, with the crust controlling the flow of water to the soil pedestal to a rate below the maximum possible infiltration rates. Pressure head is monitored near the surface and at depth to determine when steady-state unsaturated flow has been reached. Successive steady-state flow systems, with increasing levels of saturation, are achieved by using crusts with increasingly higher permeabilities. Multiple tests allow plotting of hydraulic conductivity as a function of pressure head.

Method Selection Considerations: **Advantages:** (1) Measurements and calculations are reasonably simple; (2) a high degree of accuracy can be achieved if the crusts are carefully prepared; (3) can be used on sloping land surfaces; and (4) measurements can be made on large undisturbed soil columns to include effects of soil structure and other macroporosity, which might be missed by laboratory measurements of soil cores. **Disadvantages:** (1) Measurements are time and labor intensive; (2) a unit hydraulic gradient must exist in a vertical direction for measurements to be accurate (a reasonable assumption if steady-state flow is reached and the soil material is homogeneous); (3) only records the wetting portion of the soil water retention curve (see Section 6.4.1), so the effects of hysteresis are not determined; and (4) measurements apply to a relatively small area of soil.

Frequency of Use: Uncommon.

Standard Methods/Guidelines: ASTM (1990a), Green et al. (1986).

Sources for Additional Information: Bouma et al. (1974), Hendrickx (1990), Thompson et al. (1989), Wilson (1982). See also, Table 7-3.

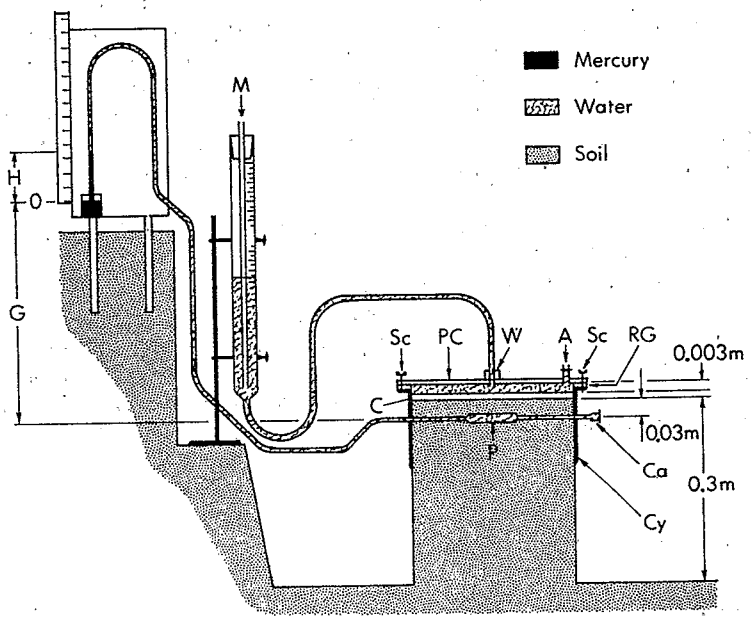

Figure 7.2.4 **Schematic diagram of field installation of the measurement apparatus for the crust-imposed steady flux method: M = constant-head device, Sc = wing nut, PC = plastic cover, W = water inlet, A = air outlet, RG = rubber gasket, C = gypsum-sand crust, Ca = tensiometer cap, Cy = metal cylinder with sharpened edge, H = height of mercury column above mercury pool, and G = height of mercury pool above tensiometer porous cup, P (Green et al., 1986, after Baker, 1977, by permission).**

7.2 UNSATURATED HYDRAULIC CONDUCTIVITY

7.2.5 Sprinkler/Dripper Methods

Other Names Used to Describe Method: Sprinkler-imposed steady flux, dripper method.

Uses at Contaminated Sites: **Sprinkler-impose steady flux:** Measuring vertical unsaturated hydraulic conductivity during wetting portion of moisture characteristic curve; **Dripper method:** Measuring of saturated hydraulic conductivity and sorptivity and estimating hydraulic conductivity-matric potential function, $K(\phi)$, and matric-potential (ϕ)-moisture (θ) function.

Method Description: The **sprinkler-imposed steady flux** method is similar in principle to the crust-imposed steady flux method (Section 7.2.4). A sprinkler (Figure 7.2.5) is used to apply a steady rate of water to the soil surface, which is below the rate sufficient to saturate the soil. Soil moisture content is monitored using a neutron access tube, and matric potential is measured using tensiometers placed at different depths. Moisture content and pressure head is measured when steady-state flow conditions are achieved. K is calculated by dividing flux per unit area by the hydraulic gradient. Successively higher sprinkler flux rates are used to create the next steady-state flow system. Typically, the vertical gradient is unity. The **dripper method** is a relatively new and different method for measuring and estimating a variety of soil hydrologic properties. A water storage bottle with Marriott type burette is connected to button drippers (used commercially for drip irrigation) in a cluster-like arrangement, which allows different rates of constant discharge by plugging different numbers of drippers. The drippers are located in the center of a level and relatively smooth plot (about 0.8 meters square). When water flow begins, the diameters of the horizontal wetted and ponded zones are measured until a constant value is reached (i.e., the water dripping onto the soil moves downward rather than outward on the soil surface). When a steady state is reached, the rate of dripping is increased and the diameter measured until it stabilizes again. Sorptivity is determined by measuring the horizontal wetting front advance from the ponded zone borders as a function of time. The hydraulic conductivity-matric-potential-water content functions are estimated from measurements of the saturated area on the soil surface and the distance from the ponded radius to the wetting front as a function of dripper discharge rate for several rates using equations such as Brooks-Corey (Section 7.2.8).

Method Selection Considerations: **Sprinkler-Imposed Steady Flux Advantages:** Measurements apply to a larger sample area than the crust method. **Sprinkler-Imposed Steady Flux Disadvantages:** (1) As with the crust method, K is determined only during wetting; (2) unlike the crust method, it works only at relatively high moisture contents; and (3) sprinklers are relatively expensive and cumbersome to use. **Dripper Method Advantages:** (1) Equipment is much simpler and more portable than conventional sprinkler devices; (2) rock fragments in the soil do no pose a limitation (rock at the soil surface might create problems); and (3) several hydrologic parameters are measured (infiltration, sorptivity, K_{fs}, $K[\phi]$, and ϕ-θ functions). **Dripper Method Disadvantages:** Requires a flat, relatively dry soil.

Frequency of Use: Uncommon.

Standard Methods/Guidelines: **Sprinkler-imposed steady flux:** Green et al. (1986); **Dripper method:** Shani et al. (1987).

Sources for Additional Information: Hendrickx (1990), Thompson et al. (1989). See also, Table 7-3 and references in Section 7.1.2.

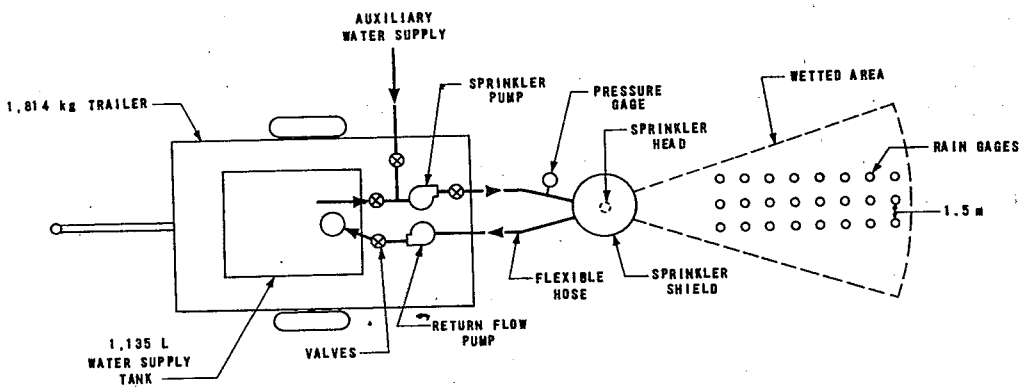

Figure 7.2.5 Layout of sprinkler infiltrometer (U.S. EPA, 1981, after Tovey and Pair, 1963).

7.2.6 Entrapped Air Method

Other Names Used to Describe Method: --

Uses at Contaminated Sites: Measuring unsaturated hydraulic conductivity and flux in the vadose zone.

Method Description: This method is a variant of the instantaneous profile method (Section 7.2.1). An initially saturated column of porous material, in the process of draining to a water table at its base, is rewet at its upper surface at an appropriate time, causing an increase in the pore air pressure in the zone of entrapped air in the profile between the wetting and draining fronts. When steady state is reached, soil-water pressure is measured at different depth increments in the column to calculate pressure-head gradients along the bell-shaped water content profile caused by the zone of entrapped air. The water content profile is measured directly, or inferred from a separately measured moisture characteristic curve. Since the flow is steady and the flow rate is known, hydraulic conductivity over a range of water contents can be readily calculated. Figure 7.2.6 illustrates the types of data plots that are used in this method.

Method Selection Considerations: **Advantages:** (1) Instrumentation for the instantaneous profile method also can be used for this method; and (2) total time for data collection might be somewhat shorter than for instantaneous profile method. **Disadvantages:** (1) Generally does not work well in fine-grained soils; and (2) requires more closely spaced instrumentation for moisture and matric potential measurement than a conventional instantaneous profile method.

Frequency of Use: Uncommon. More widespread use in coarse-grained soils might be merited.

Standard Methods/Guidelines: Watson (1967).

Sources for Additional Information: Bouwer and Jackson (1974). See also, Table 7-3.

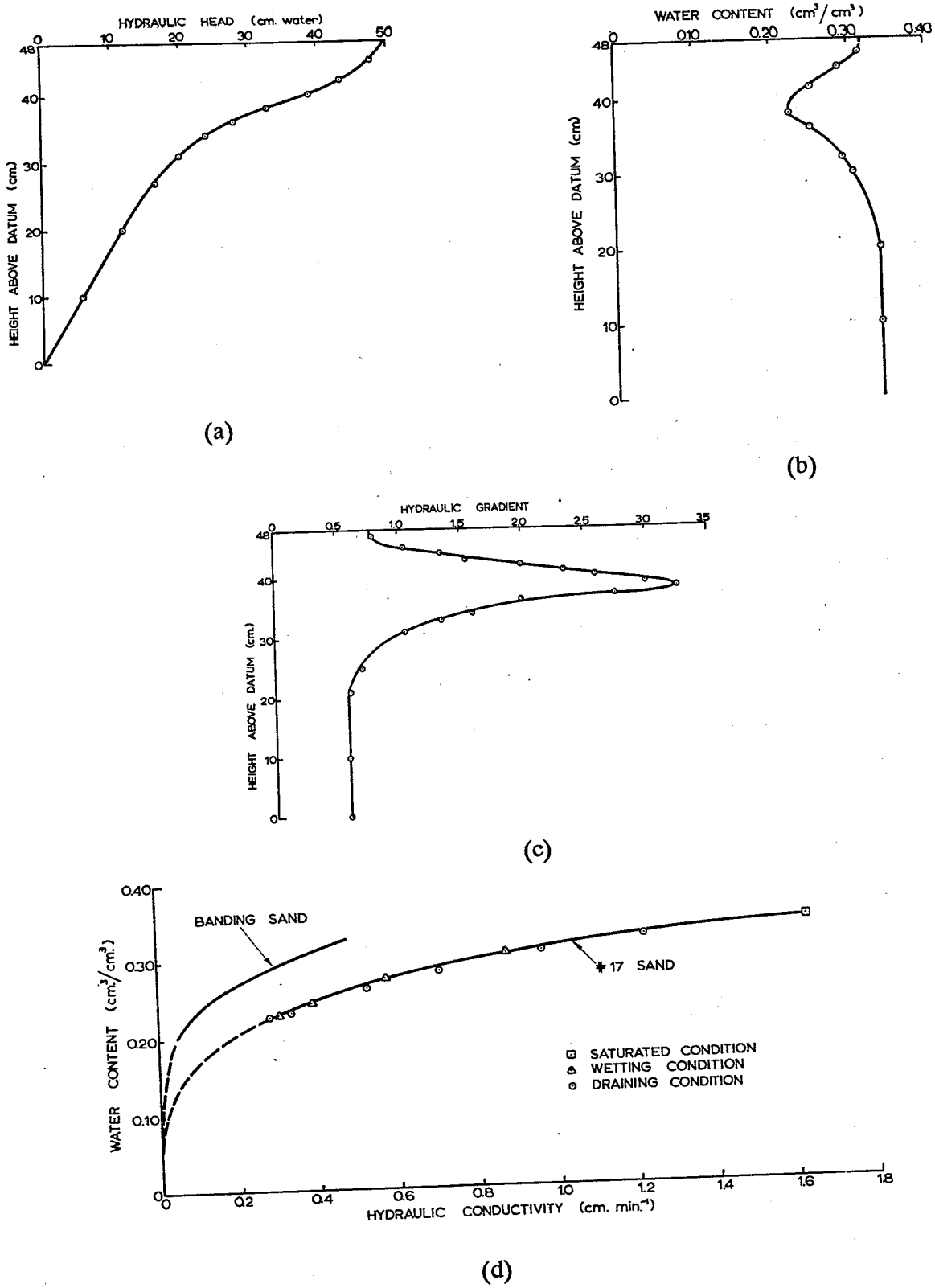

Figure 7.2.6 **Entapped air method (Watson, 1967, by permission): Hydraulic head (a) and water content profiles (b) are measured at the same time after draining soil has been rewetted and the entrapped air moved downward into the soil. The hydraulic gradient (c) is determined from the hydraulic head profile and conductivity values are determined by dividing the steady-state flux by the gradient, and these values are plotted against the corresponding water content (c) to develop the K(θ) relationship.**

7.2.7 Parameter Identification

Other Names Used to Describe Method: Parameter estimation/optimization.

Uses at Contaminated Sites: Estimating hydraulic conductivity at different water contents and other hydraulic properties from limited data.

Method Description: Results of one field or laboratory test are used to estimate hydraulic conductivity. Transient cumulative discharge of water from an initially saturated core (or in situ soil) are measured as a function of time. Numerical models coupled to statistical optimization routines analyze the result of the test by adjusting parameter values in the model until the measured response fits the model. Dane and Hruska (1983) used parameter estimation methods to estimate unsaturated hydraulic conductivity with varying hydraulic head using the draining profile method (see Section 7.2.2).

Method Selection Considerations: **Advantages:** (1) Relatively fast and inexpensive; and (2) measuring moisture content and hydraulic head as a function of time is not mandatory (but doing so will reduce the degree of uncertainty). **Disadvantages:** Incorrect solutions can result if incorrect models for soil hydraulic properties are used.

Frequency of Use: Relatively new method, which is being used with increasing frequency.

Standard Methods/Guidelines: --

Sources for Additional Information: Hendrickx (1990), Thompson et al. (1989). See also, Table 7-5.

7.2 UNSATURATED HYDRAULIC CONDUCTIVITY

7.2.8 Physical/Empirical Equations and Relationships

Other Names Used to Describe Method: --

Uses at Contaminated Sites: Estimating saturated and unsaturated hydraulic conductivity from other known or estimated soil parameters.

Method Description: Numerous empirical equations have been developed for estimating unsaturated hydraulic conductivity from other soil properties, such as: Pore-size distribution and moisture characteristic curves. Mualem (1986) classifies formulas into three major categories: (1) Empirical forms of $K(\phi)$ and $K(\theta)$ relationships; (2) macroscopic models, which derive an analytical formula for the $K(\theta)$ relationship; and (3) statistical models, which primarily rely on the soil moisture retention curve (see Section 6.4.1) as an analogy to the pore radii distribution function. The Childs-Collis George, Marshall, Millington-Quirk, Brooks-Corey, Mualem, and van Genuchten equations are well-known equations based on statistical models. Table 7-5 identifies over 30 references (Empirical Equations/Models), which cover theoretical aspects of these equations, and also 25 references, which focus on the estimation of soil hydraulic properties from soil physical properties.

Method Selection Considerations: Relatively fast; each empirical equation has its own application and limitations based upon the assumptions of the equations. Mualem (1986) provides guidance on which methods to use based on the type of soil data that are known or can be estimated.

Frequency of Use: Fairly Common. The Brooks-Corey (1964), Mualem (1976a), and Van Genuchten (1980) are among the more commonly used formulas in current use.

Standard Methods/Guidelines: Mualem (1986).

Sources for Additional Information: Bouwer and Jackson (1974), Hendrickx (1990), Thompson et al. (1989). See also, Table 7-5.

7.3 SATURATED HYDRAULIC CONDUCTIVITY (SHALLOW)

7.3.1 Cylinder Infiltrometers

Other Names Used to Describe Method: Open and sealed single-ring and double-ring infiltrometers.

Uses at Contaminated Sites: Measuring infiltration rates/potential, saturated hydraulic conductivity, and sorptivity; estimating ground-water recharge.

Method Description: An open ended cylinder (10 to 30 centimeters in diameter) is driven into the ground to a depth ranging from 5 to 50 centimeters. A shallow ponded depth (1 to 2 centimeters) is maintained in the cylinder for a long enough time to allow steady-state (saturated-flow) infiltration to develop. The rate at which water is added to maintain the ponded depth, or a constant head in the cylinder, is a direct measure of the maximum infiltration rate for the soil. One or two rings (with water maintained in both the inner and outer rings) can be used and the rings can be open or sealed (Figure 7.3.1a). Where infiltration rates are very slow, as in clay soils or testing of clay liners, sealed double-rings (Figure 7.3.1b) are recommended for measuring infiltration rates (Sai and Anderson, 1991). Sorptivity can be determined from infiltrometer measurements by plotting the rate of infiltration versus time during the first few minutes when flow is unsaturated (see Section 6.4.2).

Method Selection Considerations: Ring infiltrometers are the recommended method for testing the hydraulic conductivity of compacted soils (Sai and Anderson, 1991). **Advantages:** (1) Are simple, inexpensive, and portable; and (2) sealed ring infiltrometers can be used to evaluate macropore flow, but the process is more cumbersome than using a tension infiltrometer (see Section 7.2.3). **Disadvantages:** (1) Tend to overestimate natural infiltration due primarily to lateral divergence of flow with depth (especially single rings); (2) provide point measurements only, so numerous tests are required to characterize spatial variability; (3) results might be misleading if water used during the test is not similar to that which normally infiltrates (i.e., wastewater might reduce infiltration by clogging compared to rainwater); and (4) shallow impeding layers might promote lateral movement of water in preference to truly vertical flow, resulting in overestimation of intake rates over larger areas.

Frequency of Use: Standard method for measuring compacted soils. Less commonly used to measure infiltration potential of natural soils (see Section 7.1.1).

Standard Methods/Guidelines: **Cylinder infiltrometer:** Bouwer (1986); **Double-ring:** ASTM (1988, 1990a), Johnson (1963); **Sealed double-ring infiltrometer:** ASTM (1990a,b), U.S. EPA (1989).

Sources for Additional Information: Thompson et al. (1989), Wilson (1982). See also, Table 7-4.

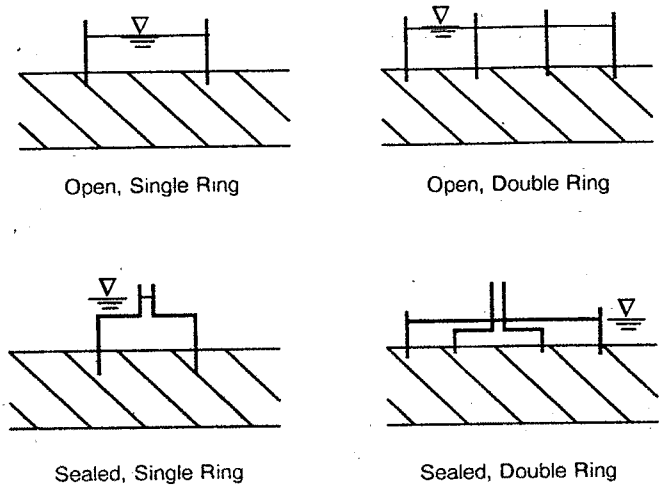

(a)

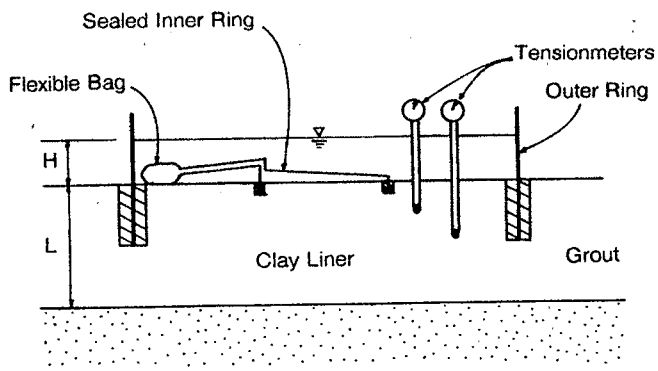

(b)

Figure 7.3.1 **Cylinder infiltrometers: (a) Open and sealed single- and double-ring infiltrometers; (b) Details of sealed double-ring infiltrometer (U.S. EPA, 1989).**

7.3 SATURATED HYDRAULIC CONDUCTIVITY (SHALLOW)

7.3.2 Constant-Head Borehole Infiltration

Other Names Used to Describe Method: Shallow-well pump-in, constant-head infiltrometer, borehole permeameter, dry/inverted auger hole method, compact constant-head (CCH) permeameter.

Uses at Contaminated Sites: Mainly measuring the horizontal component of saturated hydraulic conductivity in unsaturated soil.

Method Description: A hole is bored to the desired depth and a constant head of water is maintained in the hole (Figure 7.3.2). The test also can be used with a screened well point. When water flow into the soil reaches steady state conditions (i.e., water flow is constant to maintain constant head), the flow is measured. Hydraulic conductivity is calculated from equations using the following measurements: (1) Steady-state injection rate, (2) radius of the borehole, (3) height of water in the borehole, and (4) depth from the bottom of the borehole to the top of the impermeable layer. The calculated rate is the average hydraulic conductivity for the portion of the hole that was tested and, in a uniform soil, the measured rate of flow is dominated by the horizontal conductivity.

Method Selection Considerations: **Advantages:** (1) Recently developed compact constant-head permeameter can be used to depths up to 10 meters; (2) can be used in rocky or gravelly soil; and (3) tests a larger volume of soil compared to the Guelph permeameter. **Disadvantages:** (1) Test requires presence of an impermeable layer below the bottom of the borehole; (2) large quantities of water might be required; (3) a single test can take several days to complete; (4) requires soil that can maintain an open borehole; (5) smearing of the auger hole walls will result in underestimation of conductivity; and (6) measurements using water might not be applicable for evaluating potential for moving sewage wastewater or chemical waste liquids through the soil (can be overcome by using fluids in the test that are similar to the fluids of concern).

Frequency of Use: Commonly used method.

Standard Methods/Guidelines: Amoozegar and Warrick (1986, Section 29-3.2), ASTM (1990a).

Sources for Additional Information: Bureau of Reclamation (1978), Hendrickx (1990), Thompson et al. (1989). See also, Table 7-4.

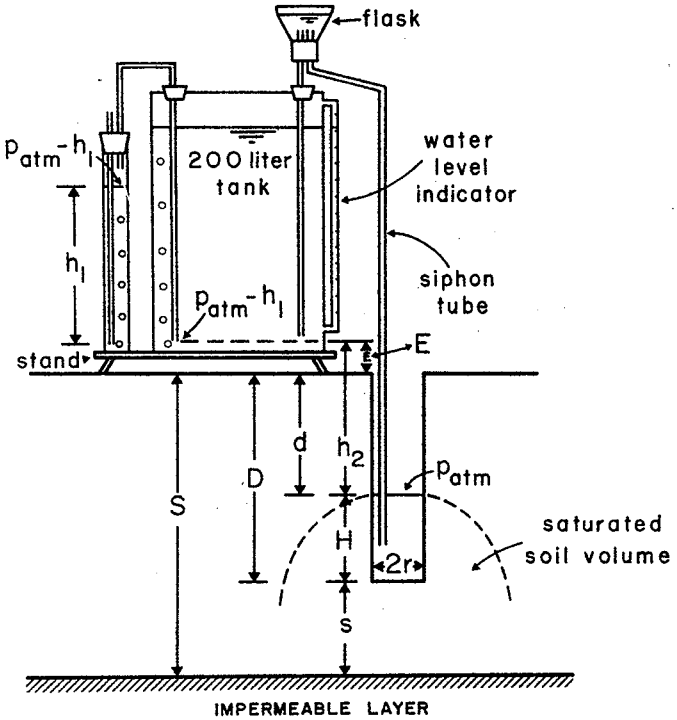

Figure 7.3.2 **Diagram of constant head device and geometry of the shallow well pump-in set up (Amoozegar and Warrick, 1986, by permission).**

7.3 SATURATED HYDRAULIC CONDUCTIVITY (SHALLOW)

7.3.3 Guelph Permeameter

Other Names Used to Describe Method: Constant head well permeameter.

Uses at Contaminated Sites: Measuring saturated and unsaturated hydraulic conductivity and sorptivity in unsaturated soil.

Method Description: The Guelph Permeameter is a constant-head apparatus designed for small-diameter boreholes (2 to 5 centimeters). A device, which controls hydraulic head and measures the injection rate, is inserted into an uncased borehole. Constant head is maintained until steady-state flow is achieved. The design differs for models used in high conductivity and low conductivity porous media (Figure 7.3.3a and b). A vertical profile of K can be developed by repeating the test at various depths. Measurements typically represent an average of horizontal and vertical hydraulic conductivity.

Method Selection Considerations: **Advantages:** (1) Only requires one operator and is fast (usually ranges from 5 to 60 minutes); (2) relatively small volumes of water are required; (3) other parameters, such as unsaturated hydraulic conductivity and sorptivity, can be estimated; and (4) is commercially available. **Disadvantage:** (1) A limited volume of soil is tested, so replication and multiple tests are required to characterize spatial variability; (2) requires materials that can maintain an open borehole; (3) smearing of clay on borehole walls will result in measurements lower than the actual K; (4) rests on bottom of hole, which might impede vertical water flow, especially in small diameter holes; (5) unsaturated hydraulic conductivity and sorptivity measurements are based on assumptions that will have varying degrees of validity for different porous media; (6) depth limited to about 2 meters; and (7) measurements using water might not be applicable for evaluating potential for movement of sewage wastewater or chemical waste liquids through the soil (can be overcome by using fluids in the test that are similar to the fluids of concern).

Frequency of Use: This is a relatively new technique, which has gained rapid acceptance.

Standard Methods/Guidelines: ASTM (1990a), Reynolds and Elrick (1986).

Sources for Additional Information: Hendrickx (1990), Thompson et al. (1989). See also, Table 7-4.

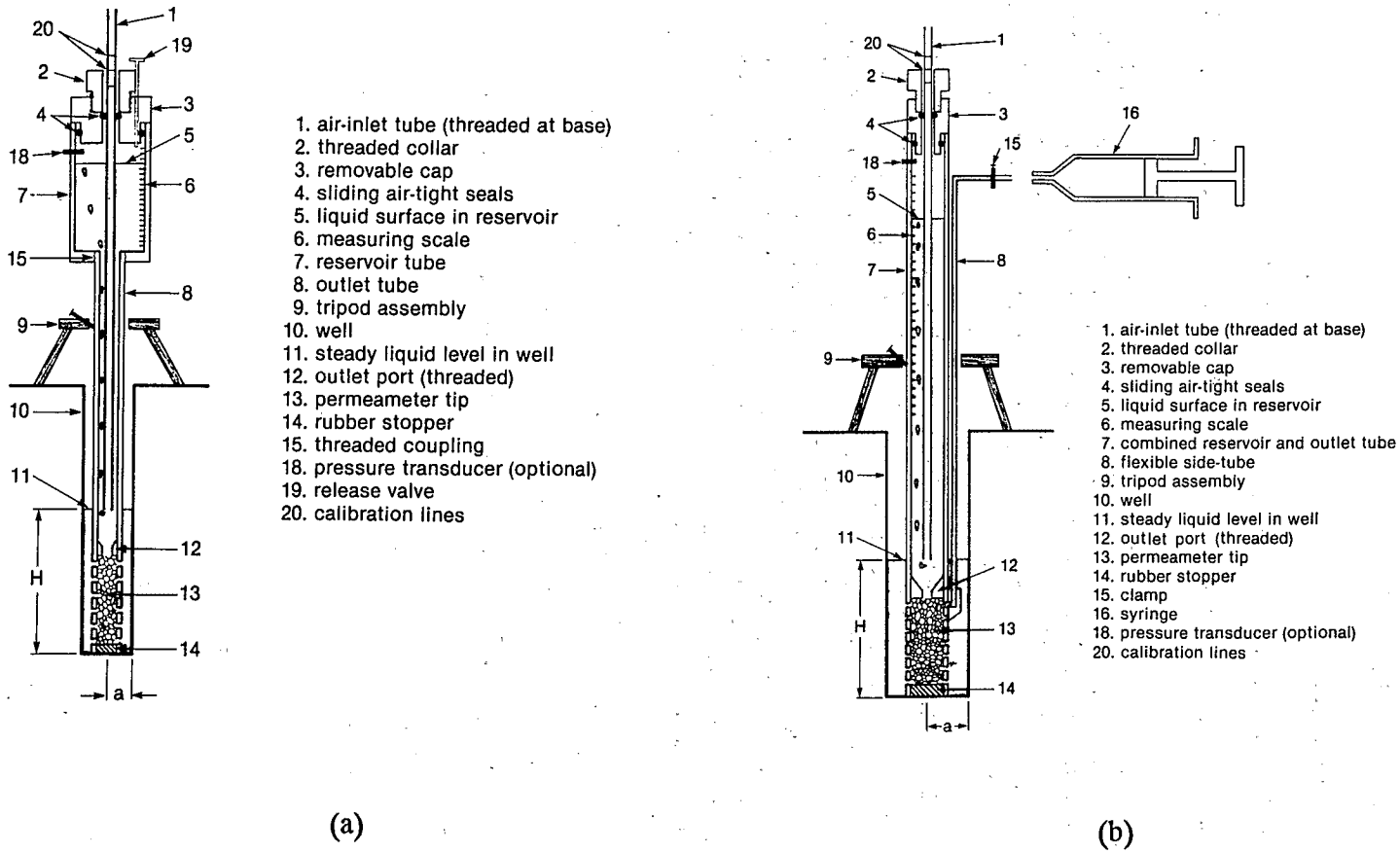

Figure 7.3.3 Schematic of Guelph permeameter: (a) Model 1 for high conductivity porous media; (b) Model 2 for low conductivity porous media (Reynolds and Elrick, 1986, by permission).

7.3 SATURATED HYDRAULIC CONDUCTIVITY (SHALLOW)

7.3.4 Air-Entry Permeameter

Other Names Used to Describe Method: --

Uses at Contaminated Sites: Measuring saturated hydraulic conductivity in unsaturated soil; estimating of $K(\phi)$ and $K(\theta)$ relationships.

Method Description: A cylinder 20 to 30 centimeters in diameter and over 10 centimeters long is driven about 10 centimeters into the soil. A layer of sand is placed inside the cylinder, and the cylinder is sealed with a top-plate assembly and water is supplied to the cylinder from a reservoir (Figure 7.3.4). An air valve allows air to escape from the cylinder until the cylinder is completely filled, at which time it is closed. When the wetting front reaches the bottom of the cylinder below the soil surface, the supply of water is shut off and a valve attached to a vacuum gage is opened. The time required for the wetting front can be estimated by a few trials before the procedure is started, or alternatively, it can be detected using a fine tensiometer probe. The pressure inside the cylinder decreases to a minimum (the **air-entry value**), at which time air begins to bubble up through the soil. At this point, the equipment is removed and the depth of wetting front is determined by digging. The air-entry pressure can be calculated from pressure measurements and the depth of the wetting front, which can in turn be used to calculate saturated hydraulic conductivity. Bresler et al. (1978) describe a method for estimating unsaturated hydraulic conductivity as a function of water content and matric potential using the air-entry value obtained using an air-entry permeameter.

Method Selection Considerations: More sensitive to vertical than horizontal K. **Advantages:** (1) Is fast (around 1 hour), requires a small volume of water (around 10 liters), and is relatively simple to use; and (2) tests larger volume of soil than the Guelph permeameter. **Disadvantages:** (1) Multiple tests are required to characterize spatial variability; (2) the presence of macropores and cracks might cause problems; (3) measurements using water might not be applicable for evaluating potential for movement of sewage wastewater or chemical waste liquids through the soil (can be overcome by using fluids in the test that are similar to the fluids of concern); (4) gravel within 10 to 20 centimeters of the ground surface can cause problems in placement of the cylinder. See Table 7-2 for additional information.

Frequency of Use: Fairly widely used.

Standard Methods/Guidelines: ASTM (1990a), Bouwer (1966).

Sources for Additional Information: Amoozegar and Warrick (1986), Bouma (1983), Hendrickx (1990), Thompson et al. (1989). See also, Table 7-4.

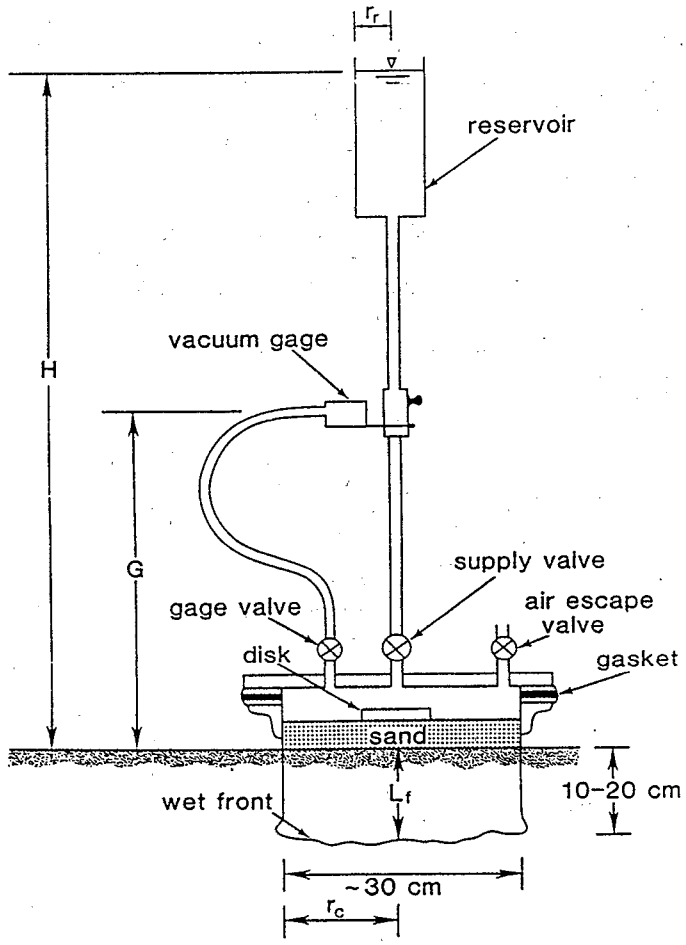

Figure 7.3.4 **Air entry permeameter (Thompson et al., 1989, after Bouwer, 1966, Copyright © 1989, Electric Power Research Institute, EPRI EN-6637, *Techniques to Develop Data for Hydrogeochemical Models*, reprinted with permission).**

7.3 SATURATED HYDRAULIC CONDUCTIVITY (SHALLOW)

7.3.5 Double Tube Method

Other Names Used to Describe Method: --

Uses at Contaminated Sites: Measuring saturated hydraulic conductivity in unsaturated soil.

Method Description: An auger hole is dug to the desired depth and cleaned with special tools. An outer tube is pushed into the bottom of the hole about 5 centimeters and an inner tube and a top-plate assembly are installed in the outer tube, with the inner tube pushed about 2 centimeters into the bottom of the hole (Figure 7.3.5). Each tube has a standpipe above the tube for observing the water levels in each tube. Both the inner and outer tubes are filled with water and equal head pressure is maintained in both by adjusting the water level in the inner tube, if necessary. After saturation of the bottom of the hole is achieved (usually after 1 hour for fine-textured soils), two sets of measurements are taken: (1) Water flow is shut off to the inner tube and the rate of fall of water in the standpipe is measured while a constant head is maintained in the outer tube, and (2) the water level in both tubes is brought back to the starting level, and the water level in the outer tube is controlled so that it falls at the same rate as the inner tube. Saturated hydraulic conductivity is calculated using the two head versus time graphs plotted from the measurements.

Method Selection Considerations: **Advantages:** (1) Is commercially available; and (2) characterization of anisotropic soils is possible when the method is combined with the infiltration gradient method (Section 7.3.7) **Disadvantages:** (1) Is relatively complex and time-consuming (depending on the permeability of the soil the test procedures takes from 2 to 6 hours to complete, and requires over 200 liters of water for each test); (2) is not suitable for rocky soils; (3) multiple measurements are required to characterize spatial variability; (4) is less accurate than other available methods (see Table 7-2); and (5) measurements using water might not be applicable for evaluating potential for movement of sewage wastewater or chemical waste liquids through the soil (can be overcome by using fluids in the test that are similar to the fluids of concern).

Frequency of Use: Fairly uncommon.

Standard Methods/Guidelines: ASTM (1990a), Amoozegar and Warrick (1986).

Sources for Additional Information: Bouma (1983), Hendrickx (1990). See also, Table 7-4.

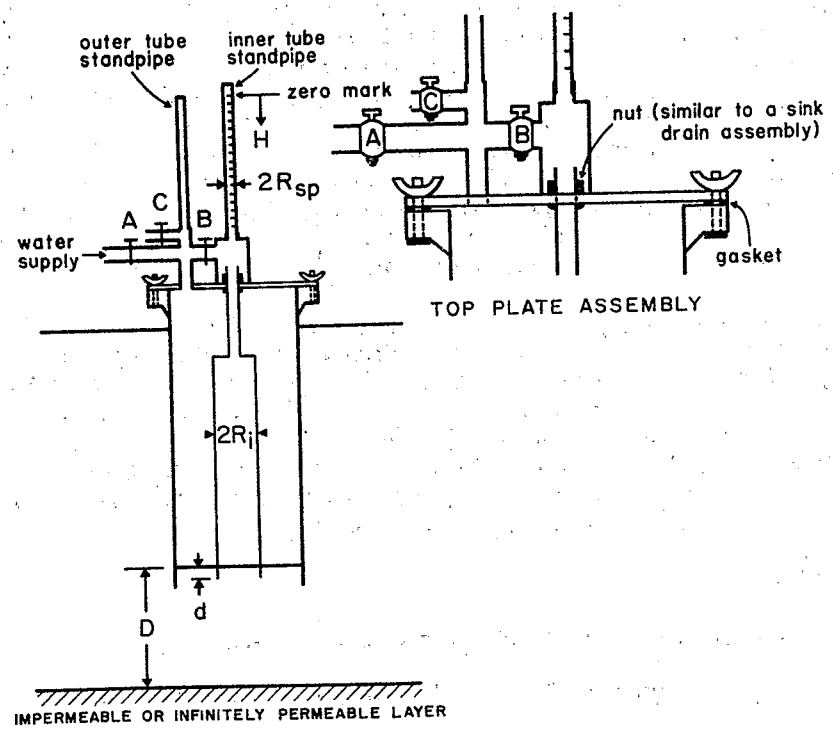

Figure 7.3.5 Diagram of equipment used for double-tube method (Amoozegar and Warrick, 1986, by permission).

7.3 SATURATED HYDRAULIC CONDUCTIVITY (SHALLOW)

7.3.6 Cylinder Permeameter

Other Names Used to Describe Method: Permeameter, ring permeameter.

Uses at Contaminated Sites: Measuring saturated hydraulic conductivity in unsaturated soil.

Method Description: A cylinder 45 to 50 centimeters in diameter and greater than 35 centimeters long is placed in a dug hole, which is wider than the cylinder. The cylinder is driven about 15 centimeters into the soil, and four tensiometers are placed symmetrically around the cylinder 10 centimeters from its sides and about 23 centimeters below the bottom of the hole (Figure 7.3.6). The hole and inside of the cylinder are maintained at a depth of about 15 centimeters The tensiometers are monitored until they read zero (saturation is achieved), at which time the rate of flow of water into the soil from the cylinder is measured. Conductivity is measured using Darcy's equation.

Method Selection Considerations: **Advantages:** (1) Is relatively simple; and (2) calculations are easy. **Disadvantages:** (1) Is time-consuming and requires in excess of 100 liters of water; (2) is not suitable for rocky soils; (3) measurements are not very accurate; and (4) measurements using water might not be applicable for evaluating potential for movement of sewage wastewater or chemical waste liquids through the soil (can be overcome by using fluids in the test that are similar to the fluids of concern). See Table 7-2 for additional information.

Frequency of Use: Uncommon.

Standard Methods/Guidelines: Boersma (1965).

Sources for Additional Information: Bouma (1983), Bureau of Reclamation (1978), Hendrickx (1990), Roberts (1984), U.S. EPA (1981), Winger (1960).

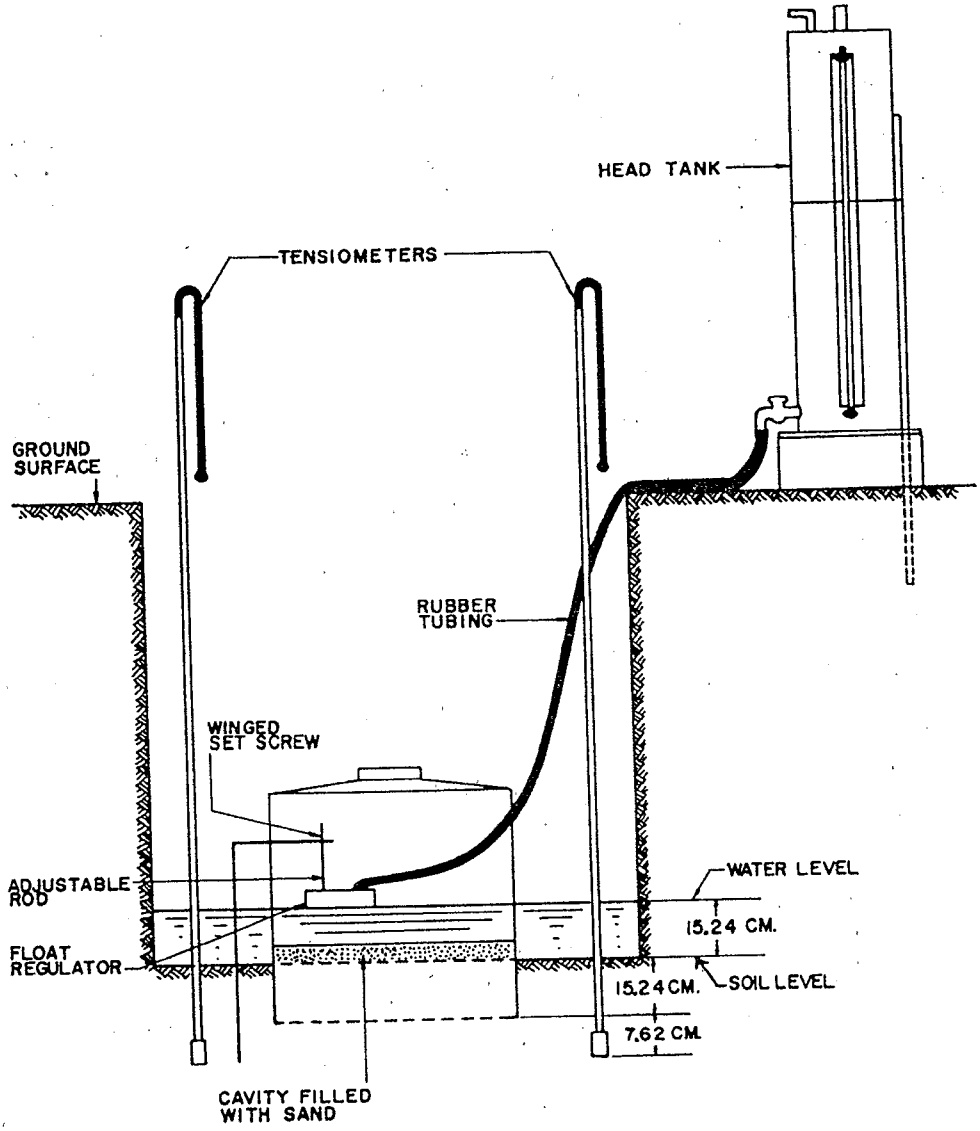

Figure 7.3.6 Schematic diagram of equipment for the cylinder permeameter method (Boersma, 1965, by permission).

7.3 SATURATED HYDRAULIC CONDUCTIVITY (SHALLOW)

7.3.7 Infiltration Gradient Method

Other Names Used to Describe Method: --

Uses at Contaminated Sites: Measuring saturated hydraulic conductivity in unsaturated soil.

Method Description: This method combines elements of the cylinder permeameter (Section 7.3.6) and the double tube methods (Section 7.3.5). Two concentric cylinders are placed in an auger hole with small, fast-reacting piezometer tubes placed at different depths inside the inner tube (Figure 7.3.7). Changes in vertical hydraulic gradient are recorded as the hydraulic head in both tubes is kept equal and varied from 20 to over 200 centimeters When combined with the double tube method in the same hole, vertical and horizontal hydraulic conductivity components can be separated out.

Method Selection Considerations: **Advantages:** (1) Measures primarily vertical hydraulic conductivity; and (2) when used with the double tube method, vertical and horizontal components of hydraulic conductivity can be differentiated. **Disadvantages:** (1) Requires about 3 hours to complete and about 100 liters of water; (2) is not suitable for stony soils; (3) measurements using water might not be applicable for evaluating potential for movement of sewage wastewater or chemical waste liquids through the soil (can be overcome by using fluids in the test that are similar to the fluids of concern).

Frequency of Use: Uncommon.

Standard Methods/Guidelines: Bouwer (1978).

Sources for Additional Information: Bouwer and Jackson (1974). See also, Table 7-4.

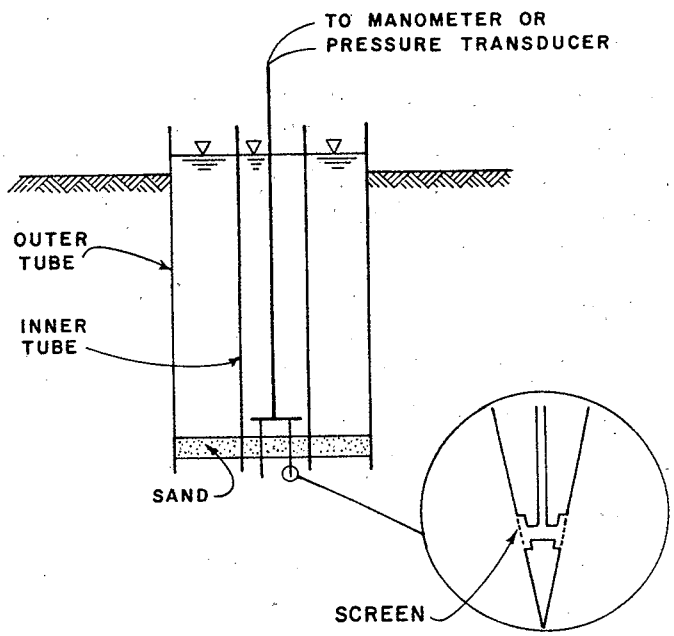

Figure 7.3.7 Schematic of infiltration gradient technique (Bouwer and Jackson, 1974, by permission).

7.3 SATURATED HYDRAULIC CONDUCTIVITY (SHALLOW)

7.3.8 In Situ Monoliths

Other Names Used to Describe Method: Column method, cube method.

Uses at Contaminated Sites: Measuring vertical saturated hydraulic conductivity; measuring K_{sat} in soils with continuous macropores (column-crust method).

Method Description: **Column method:** A soil column (30 centimeters in diameter and 30 centimeters thick) is carved out in situ and encased in gypsum or resin. Water is applied to the top of the column until steady-state infiltration is reached. Flow through the column is measured volumetrically, either by collecting outflow from a column that has been detached from the soil, or by measuring the flow rate once steady-state infiltration has been reached. **Cube method:** This is a variant of the column method, which allows measurement of both vertical and horizontal saturated hydraulic conductivity. A cube of soil (30 centimeters by 30 centimeters by 30 centimeters) is excavated in situ and encased in gypsum. The cube is removed, and vertical hydraulic conductivity is measured using procedures similar to the column method. Next, the open ends of the cube are sealed with gypsum, the cube is turned sideways, and the gypsum removed from the top and bottom for a second measurement of hydraulic conductivity (Figure 7.3.8a). **Column-crust method:** This combines elements of the crust test (Section 7.2.4) with the column method in order to differentiate between the macropore and soil matrix components of saturated flow. A column of soil is excavated in situ and tensiometers are placed in the column before it is encased in gypsum. Macropore flow is measured by adding water until steady-state infiltration is reached with the column detached (Figure 7.3.8b-A). A light crust then is placed on the column and water applied until steady infiltration is reached at zero pressure head (Figure 7.3.8b-C). The latter measurement represents K_{sat} without macropore flow. Macropore flow is the difference between the first and second measurements. By using crusts of different thicknesses, unsaturated hydraulic conductivity can be measured with this method as well.

Method Selection Considerations: **Advantages:** (1) Are relatively simple; (2) calculations are simple and accurate; (3) cube method allows accurate measurement of vertical and horizontal saturated-hydraulic conductivity; and (4) column-crust method allows differentiation of macropore and soil matrix saturated flow. **Disadvantages:** (1) Preparation and execution are relatively time consuming; and (2) measurements using water might not be applicable for evaluating potential for movement of sewage wastewater or chemical waste liquids through the soil (can be overcome by using fluids in the test that are similar to the fluids of concern). See Table 7-2 for additional information.

Frequency of Use: Uncommon.

Standard Methods/Guidelines: --

Sources for Additional Information: Bouma (1983). See also, Table 7-4.

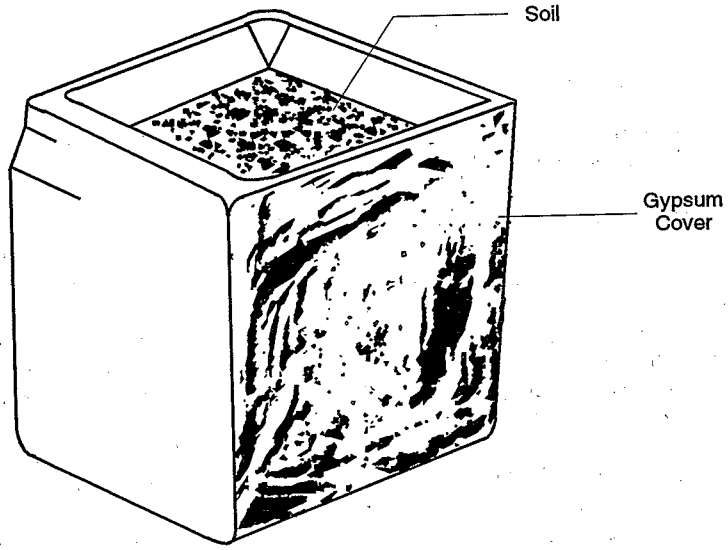

(a)

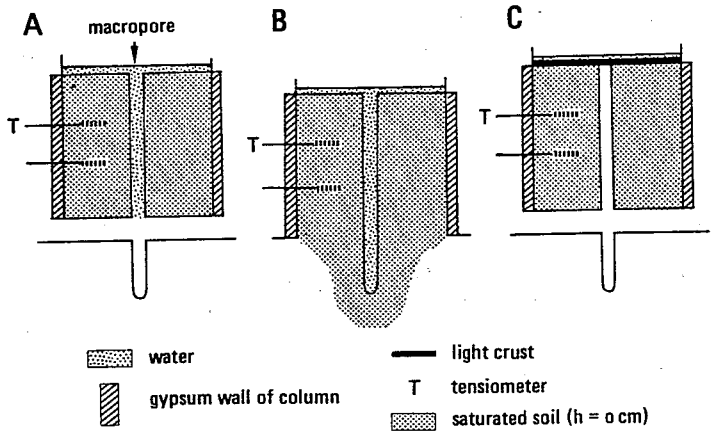

(b)

Figure 7.3.8 Monolith methods: (a) Gypsum covered cube of soil used to measure vertical and horizontal saturated-hydraulic conductivity (Bouma and Dekker, 1981, by permission); (b) Schematic representation of three types of flux measurements using the column-crust method (Bouma, 1982, by permission).

7.3 SATURATED HYDRAULIC CONDUCTIVITY (SHALLOW)

7.3.9 Boutwell Method

Other Names Used to Describe Method: --

Uses at Contaminated Sites: Measuring vertical and horizontal components of saturated hydraulic conductivity at the ground surface, especially clay liners.

Method Description: The Boutwell method is a two-stage falling-head borehole test used to calculate vertical and horizontal hydraulic conductivity. In Stage I, a borehole is cased, grouted, and filled with water (Figure 7.3.9a). The casing and standpipe are filled with water and flow out of the bottom of the borehole is monitored until steady-state conditions are reached. In Stage II, the hole is extended beyond the bottom of the borehole, with the ratio of the length to diameter of the uncased zone between 1 and 1.5 (Figure 7.3.9a). The casing and standpipe are reassembled and the rate of fall of water in the stand pipe is monitored until steady-state conditions are reached again. Sai and Anderson (1991) provide the equations for calculating vertical and horizontal hydraulic conductivity.

Method Selection Considerations: **Advantages:** (1) Is relatively fast, inexpensive, simple, and convenient to use; (2) can measure very low hydraulic conductivities (1×10^{-9} meters/second); (3) allows determination of vertical and horizontal components of hydraulic conductivity. **Disadvantages:** (1) Measures small volume, so might miss soil macropores and other flaws in soil liner construction; (2) short test periods do not allow entrapped air to dissolve; (3) method does not account for the effects of soil suction; and (4) effects of incomplete and variable suction are not known.

Frequency of Use: Relatively new method, which has not been widely tested.

Standard Methods/Guidelines: Sai and Anderson (1991).

Sources for Additional Information: Boutwell and Derric (1986).

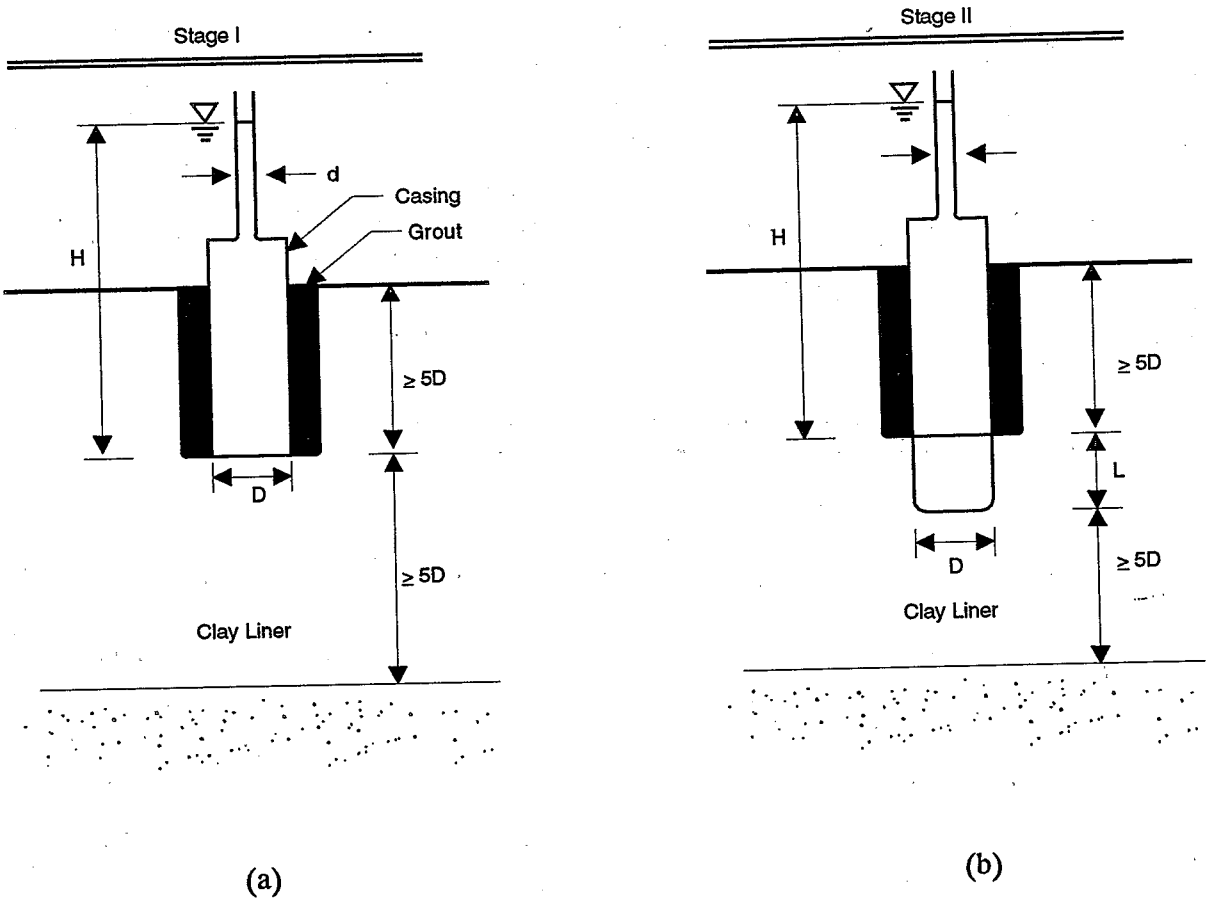

Figure 7.3.9 Schmatic diagram of Boutwell borehole permeameter: (a) Stage I; (b) Stage II (Sai and Anderson, 1991).

7.3 SATURATED HYDRAULIC CONDUCTIVITY (SHALLOW)

7.3.10 Velocity Permeameter

Other Names Used to Describe Method: Velocity head permeameter, falling head permeameter.

Uses at Contaminated Sites: Measuring vertical saturated hydraulic conductivity.

Method Description: The velocity permeameter estimates hydraulic conductivity based on the rate of fall of water in a head tube above a soil core enclosed within a coring tube (Figure 7.3.10a). This is a falling-head test in which data on change of water level in the head tube is entered into small programmable calculator equipped with a timing module. The data on varying rates of fall are used to calculate a series of hydraulic conductivity values, which are plotted against time since the test began (Figure 7.3.10b). The field saturated hydraulic conductivity is the lowest value on the graph.

Method Selection Considerations: **Advantages:** Is a relatively simple and rapid method (about an hour), provided the velocity of the fall of water in the head tube can be measured accurately (accuracy increases as the ratio of the soil-core diameter to the head-tube diameter increases). **Disadvantages:** (1) Maintaining a seal around the edges of the coring device might be difficult under high liquid heads; and (2) field measurements and data reduction require a skilled operator.

Frequency of Use: Relatively new method, which has not been widely tested.

Standard Methods/Guidelines: --

Sources for Additional Information: Kanwar et al. (1987), Sai and Anderson (1991).

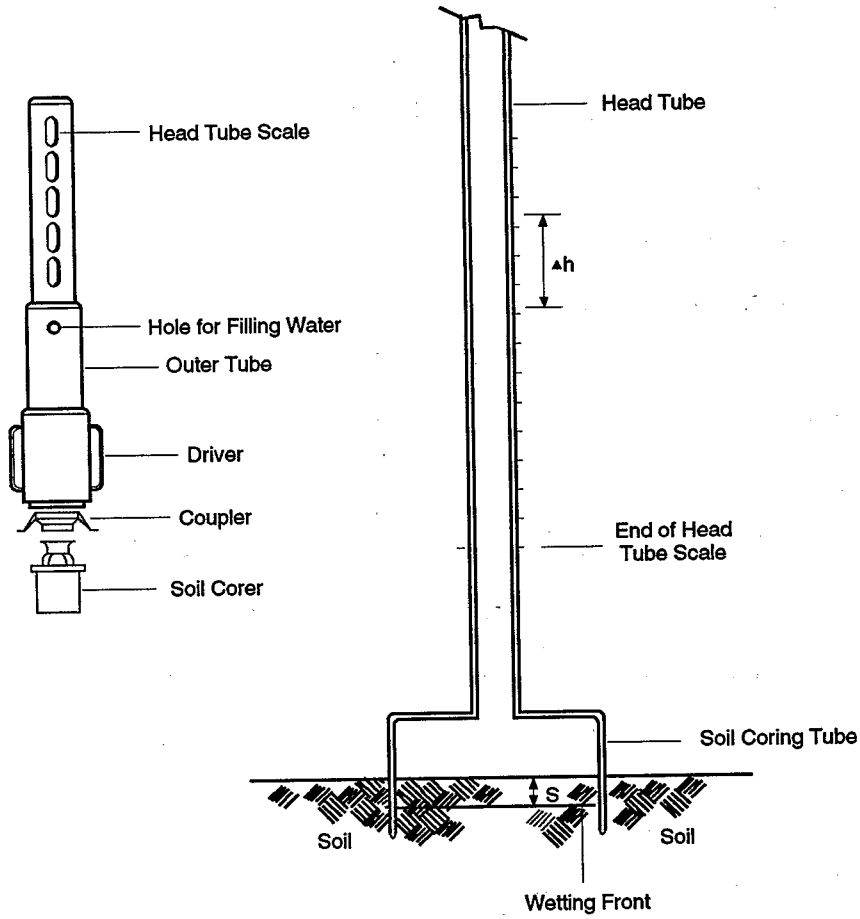

(a)

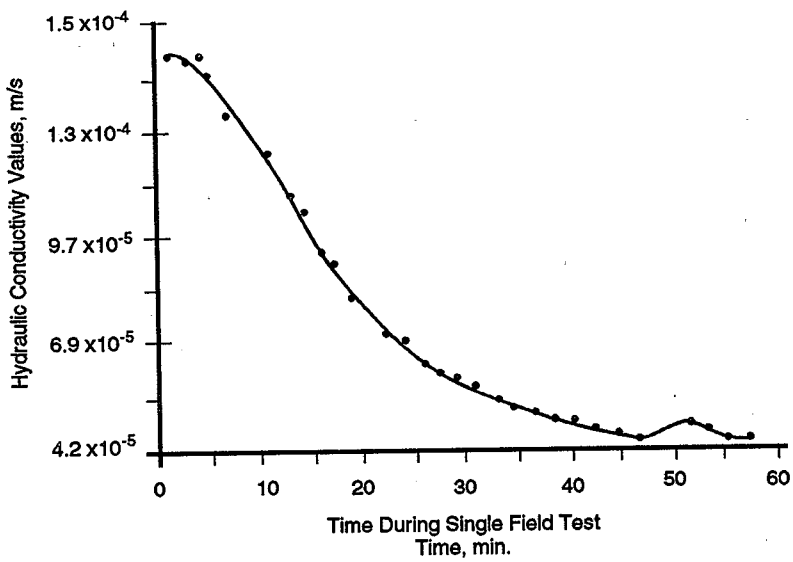

(b)

Figure 7.3.10 Velocity permeameter: (a) Front view and operational schematic; (b) Measured hydraulic conductivity versus time (Sai and Anderson, 1991).

7.3 SATURATED HYDRAULIC CONDUCTIVITY (SHALLOW)

7.3.11 Percolation Test

Other Names Used to Describe Method: Perc test, falling head test.

Uses at Contaminated Sites: --

Method Description: This test is similar to the constant head shallow-well pump-in method, except that a constant head is not maintained for the test. A 6-inch diameter hole is augered or dug to the depth of interest and 2 inches of gravel are placed in the bottom to prevent scouring by water poured into the hole (Figure 7.3.11). Water is maintained at a depth of 12 inches in the hole until the soil around the hole is saturated (generally 4 to 12 hours). The water level is adjusted to 6 inches above the gravel and the amount of fall over a 30 minute period is measured. The water level is adjusted to 6 inches above the gravel after each measurement, and measurements are repeated until two successive water drops do not vary by more than 1/16 inches. Results are reported in minutes/inch or inches/hour.

Method Selection Considerations: **Advantages:** Is simple and easy to calculate. **Disadvantages:** (1) Results can be highly variable due to soil moisture conditions at the time of the test and the individual performing the test; and (2) when properly done, still only provides an approximate measure of saturated hydraulic conductivity.

Frequency of Use: Widely used for assessing soil suitability and design of septic tank soil absorption systems for sewage treatment. Not recommended for measuring saturated hydraulic conductivity.

Standard Methods/Guidelines: U.S. EPA (1980).

Sources for Additional Information: See Table 7-4.

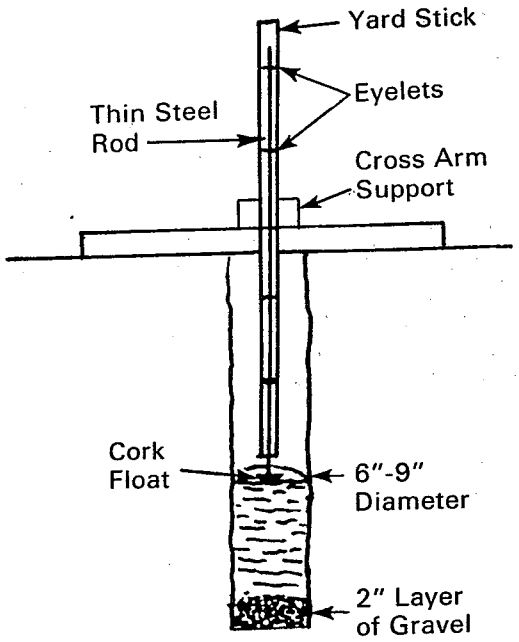

Figure 7.3.11 Floating indicator for percolation test (U.S. EPA, 1980).

7.4 SATURATED HYDRAULIC CONDUCTIVITY (DEEP)

7.4.1 USBR Single-Well Methods

Other Names Used to Describe Method: Gravity permeability tests.

Uses at Contaminated Sites: Estimating saturated hydraulic conductivity in deep boreholes in the vadose zone.

Method Description: Water is pumped into a borehole at a rate that maintains a uniform water level in a basal test section. Saturated hydraulic conductivity is estimated from appropriate curves and equations based on: (1) Dimensions of the hole and inlet pipes, (2) length in contact with formation, (3) height of water above the base of the borehole, (4) depth to water table, and (5) intake rate at steady state. **Method 1** (Figure 7.4.1a) uses an open borehole of 6 inches or more in diameter. The bottom of a feed pipe and observation pipe are set near the bottom of the borehole, and the open portion of the borehole is filled with gravel pack if required to maintain stability. Where gravel pack is required for stability, 40 feet is about the maximum depth that this test can be economically carried out. **Method 2** (Figure 7.4.1b) uses a perforated casing for the depth of interest into which water is pumped and an observation pipe set near the top of the perforations. The casing is sunk by drilling, jetting or driving, whichever give the tightest fit. This method generally is less accurate than Method 1 for unconsolidated materials, but might be the only practical method for determining permeabilities in streambeds or lakebeds below water. **Method 3** uses a hardened drive shoe to drive the casing where Method 2 will not work, and is used only where Method 2 will not work because it is the least accurate of the three methods.

Method Selection Considerations: All methods require some form of a casing advancement drilling method. **Advantages:** (1) Allows estimating saturated hydraulic conductivity at great depths in the vadose zone; (2) a series of tests as the borehole is deepened allows developing of profile of K values; and (3) can be conducted in unconsolidated formations where packer testing (Section 4.2.3) might not be feasible. **Disadvantages:** (1) K_{sat} tends to be underestimated because solution method assumes the flow region is entirely saturated, which is not true; (2) expensive and time-consuming (especially in dry, coarse-grained material), so multiple tests to adequately characterize spatial variability might be prohibitive; and (3) requires skilled personnel to conduct tests. Method descriptions above indicate specific conditions under which the different methods are used. Packer testing (Section 4.2.3) is probably the preferred method where boreholes are in consolidated rock.

Frequency of Use: Most likely to be used in the western United States where the saturated zone is far below the ground surface.

Standard Methods/Guidelines: Bureau of Reclamation (1981).

Sources for Additional Information: Everett et al. (1982), Schmid (1967), Stephens and Neuman (1982a,b), Wilson (1982), Zanger (1953).

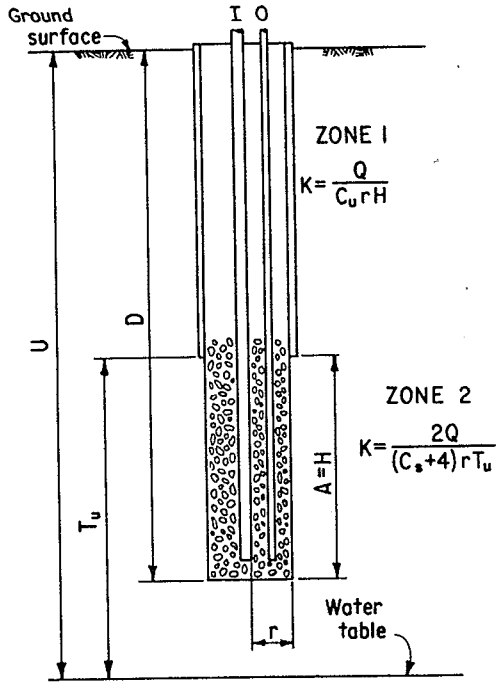

K = coefficient of permeability, feet per second under a unit gradient
Q = uniform flow into well, ft^3/s
r = radius of test section, ft
H = height of column of water in well, ft
A = length of test section, ft (for this method, A = H)
C_u and C_s = conductivity coefficients
$X = \frac{H}{T_u}(100)$ = percent of unsaturated stratum
$T_u = U - D + H$ = distance from water surface in well to water table, ft
U = thickness of unsaturated permeable bed, ft
D = distance from ground surface to bottom of test section, ft
I = feed pipe for pouring water into well (a 2-inch standard pipe is usually satisfactory)
O = observation pipe ($1\frac{1}{4}$-inch o.d. pipe is satisfactory)
a = surface area of test section (area of wall plus area of bottom), ft^2
Limitations:
$A \geq 10r$ and $\frac{Q}{a} \leq 0.10$

(a)

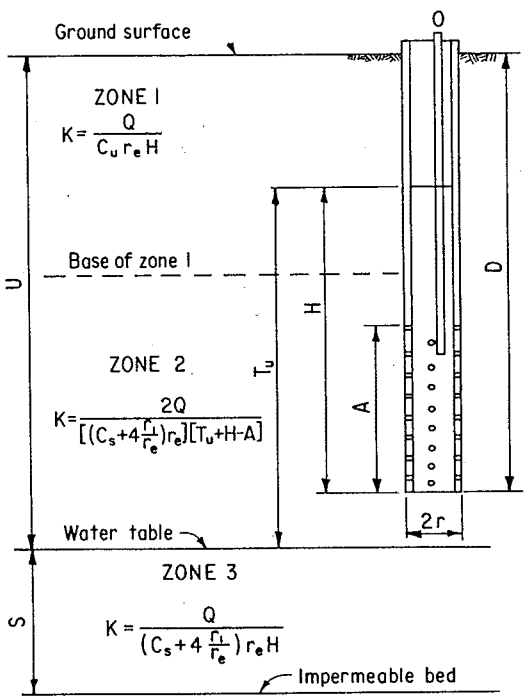

K = coefficient of permeability, feet per second under a unit gradient
Q = steady flow into well, ft^3/s
H = height of water in well, ft
A = length of perforated section, ft
r_i = outside radius of casing (radius of hole in consolidated material), ft
r_e = effective radius of well = r_i (area of perforations)/(outside area of perforated section of casing); $r_i = r_e$ in consolidated material that will stand open and is not cased
C_u and C_s = conductivity coefficients
T_u = distance from water level in casing to water table, ft
a = surface area of test section (area of perforations plus area of bottom), ft^2; where clay seal is used at bottom, a = area of perforations
S = thickness of saturated permeable material above an underlying relatively impermeable stratum, ft
$X = \frac{H}{T_u}(100)$ = percent of unsaturated stratum
U = thickness of unsaturated material above water table, ft
D = distance from ground surface to bottom of test section, ft
O = observation pipe (1 to $1\frac{1}{4}$-inch pipe)
Limitations:
$S \geq 5A$, $A \geq 10r$, and $\frac{Q}{a} \leq 0.10$
Notes:
In zone 3, H is the difference in elevation between the normal water table and the water level in the well. In zones 2 and 3, if a clay seal is placed at the bottom of the casing, the factor $4\frac{r_i}{r_e}$ is omitted from the equations. Where the test is run with "A" as an open hole, $\frac{r_i}{r_e} = 1$ and $(C_s + 4\frac{r_i}{r_e}) = (C_s + 4)$.

(b)

Figure 7.4.1 USBR single-well hydraulic conductivity tests: (a) Method 1; (b) Method 2 (Bureau of Reclamation, 1981).

7.4 SATURATED HYDRAULIC CONDUCTIVITY (DEEP)

7.4.2 USBR Multiple-Well Method

Other Names Used to Describe Method: Gravity permeability test.

Uses at Contaminated Sites: Estimating saturated hydraulic conductivity where lenses of slowly permeable material are widespread.

Method Description: A 6-inch intake well and at least three observation wells are installed to the top of an impermeable layer (Figure 7.4.2). Water is pumped into the central well at a steady rate and changes in water levels in the piezometers are measured. K_{sat} is calculated using the appropriate curves and equations.

Method Selection Considerations: **Advantages:** Results can be used to estimate lateral flow rates in perched ground-water regions. **Disadvantages:** (1) Is expensive and time-consuming; and (2) requires trained personnel.

Frequency of Use: Relatively uncommon.

Standard Methods/Guidelines: Bureau of Reclamation (1981-Method 4).

Sources for Additional Information: Wilson (1982).

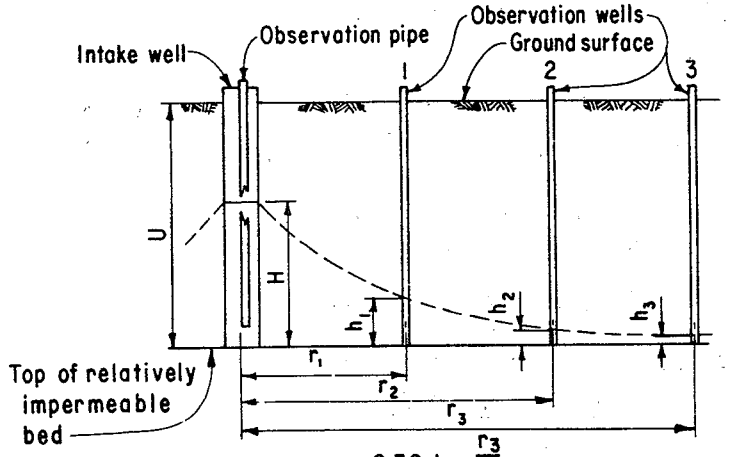

$$K = \frac{2.3Q \log \frac{r_3}{r_2}}{\pi (h_2^2 - h_3^2)}$$

K = coefficient of permeability, feet per second under a unit gradient

Q = uniform flow into intake well, ft^3/s

r_1, r_2, and r_3 = distance from intake well to observation holes, ft

h_1, h_2, and h_3 = height of water in observation holes r_1, r_2, and r_3 respectively, above elevation of top of impermeable layer, ft

H = height of column of water in intake pipe above top of impermeable stratum, ft

U = distance from ground surface to impermeable bed, ft

Figure 7.4.2 USBR multiple-well method (Bureau of Reclamation, 1981).

7.4 SATURATED HYDRAULIC CONDUCTIVITY (DEEP)

7.4.3 Stephens-Neuman Single-Well Method

Other Names Used to Describe Method: Unsteady flow permeability test.

Uses at Contaminated Sites: Estimating saturated hydraulic conductivity in the deep vadose zone.

Method Description: Water is pumped into a well drilled to the depth of interest, and changes in water level with time are measured and used to estimate steady-state infiltration, rather than pumping until steady-state infiltration is achieved, as in the USBR single-well tests (Section 7.4.1). Empirical formulas based on numerical simulations using the unsaturated characteristics of four soils allows correction for unsaturated flow conditions during the test.

Method Selection Considerations: **Advantages:** (1) Provides more accurate estimation of the saturated hydraulic conductivity of unsaturated soil than the USBR single-well methods; (2) less time is required for the test because steady-state flow conditions are not required; (3) allows estimating saturated hydraulic conductivity at great depths in the vadose zone; (4) a series of tests as the borehole is deepened allows developing of a profile of K values; and (5) can be conducted in unconsolidated formations where packer testing (Section 4.2.3) might not be feasible. **Disadvantages:** The cost of drilling deep boreholes makes it difficult to characterize spatial variability of hydraulic conductivity with this method. Packer testing (Section 4.2.3) probably is the preferred method where boreholes are in consolidated rock.

Frequency of Use: Uncommon.

Standard Methods/Guidelines: Stephens and Neuman (1980, 1982c).

Sources for Additional Information: Everett et al. (1982), Wilson (1982).

7.4 SATURATED HYDRAULIC CONDUCTIVITY (DEEP)

7.4.4 Air Permeability Method

Other Names Used to Describe Method: --

Uses at Contaminated Sites: Estimating saturated hydraulic conductivity in the deep vadose zone.

Method Description: Air pressure changes in the subsurface in response to change in the barometric pressure at the land surface are measured in specially constructed piezometers (Figure 7.4.4). Pressure response data combined with information on the air-filled porosity allow calculation of air permeability. If the Klinkenberg effect is small, hydraulic conductivity can be calculated from air permeability. Section 9.4.4 provides further information of methods for measuring air permeability in shallow zones.

Method Selection Considerations: **Advantages:** Can be used to estimate hydraulic conductivity in layered materials in the vadose zone. **Disadvantages:** (1) Is indirect; (2) soils must be dry, since too much soil water inhibits air flow; (3) is expensive and time consuming; (4) is complex, requiring trained personnel; (5) in fine-grained materials, the permeability to air is greater than the hydraulic permeability because of the Klinkenberg effect; and (6) presence of clays with high shrink-swell make it difficult to accurately calculate hydraulic conductivity from air permeability.

Frequency of Use: Uncommon.

Standard Methods/Guidelines: Weeks (1978).

Sources for Additional Information: Everett et al. (1982), Wilson (1982).

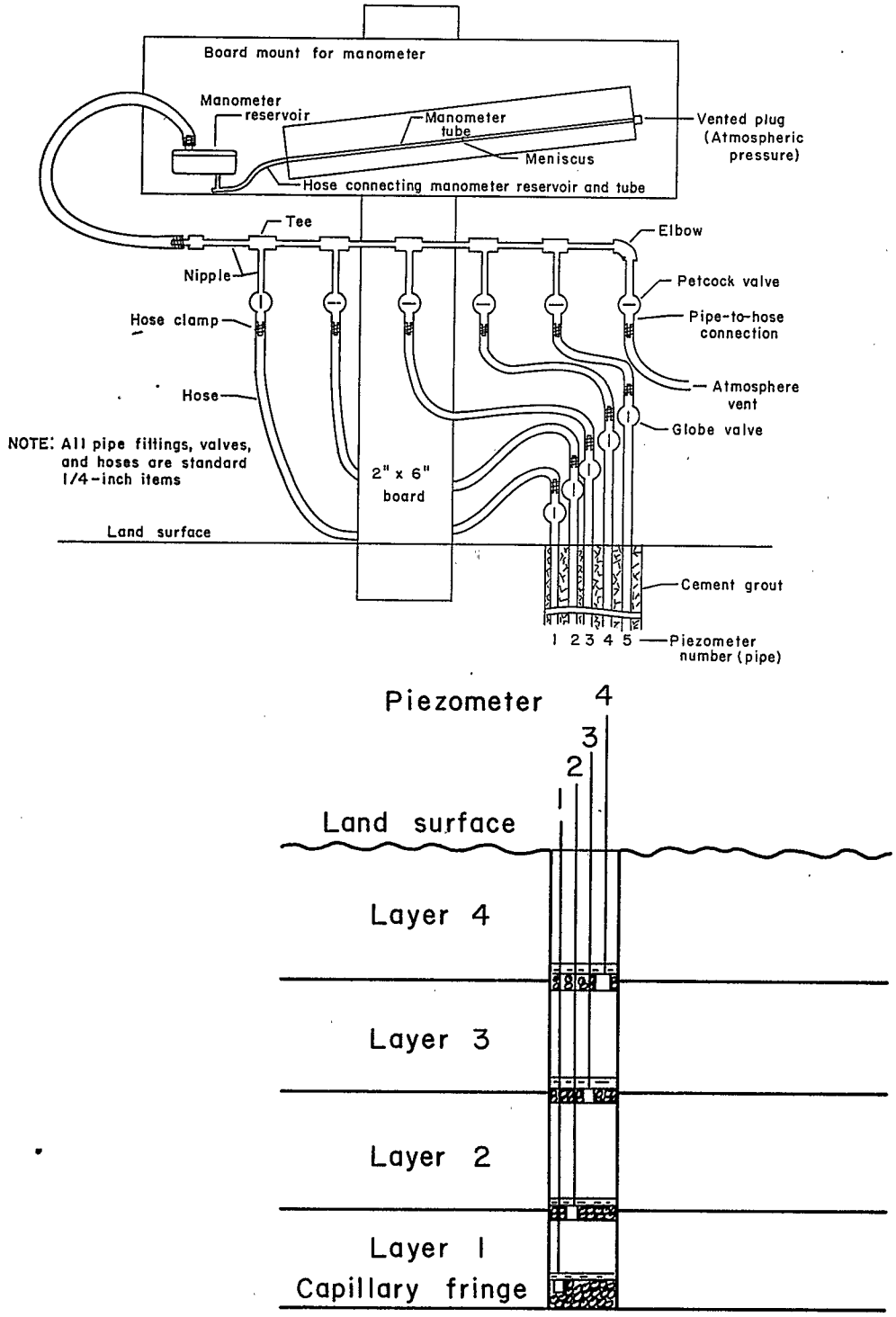

Figure 7.4.4 Schematic diagram of manifold and connections to a piezometer nest to determine air pressure at selected depths in the vadose zone (adapted from Weeks, 1978).

7. VADOSE ZONE HYDROLOGIC PROPERTIES (II): INFILTRATION, CONDUCTIVITY, AND FLUX

7.5 WATER FLUX (UNSATURATED ZONE)

7.5.1 Water Budget Methods

Other Names Used to Describe Method: Water balance method, water content method.

Uses at Contaminated Sites: Estimating leachate generation by percolating water in the subsurface; estimating solute velocity.

Method Description: **Water flux:** The method itself involves calculations of water flux in the subsurface based on inflow (precipitation), outflow (runoff, evapotranspiration), and changes in storage (water content). Parameters, which must be estimated or measured in the field, include: (1) Precipitation (Sections 8.1.1 and 8.1.2), (2) evapotranspiration (Sections 8.3 and 8.4), and (3) available water capacity (Section 6.3.3) or changes in water content or soil matric potential with time (using methods described in Sections 6.2 and 6.3). Figure 7.5.1 shows a cumulative water balance used to determine seepage from a wastewater lagoon to ground water. Simplified versions of this approach include: (1) The instantaneous profile method (Section 7.2.1); (2) Wilson (1980) describes a variant of this method, which provides a profile-specific water budget by measuring changes in water content at different depths by assuming all terms of the water budget calculation are zero except for flux and soil-water storage changes (similar to draining profile method, Section 7.2.2); and (3) the Thornthwaite method, which can be used with climatic data (monthly precipitation and temperature) and soil water holding characteristics. Vadose-zone solute-transport models involving the soil rooting zone are based primarily on water budget principles and allow estimation of water and contaminant flux. **Velocity:** Everett et al. (1983) describe a simplified method for estimating vertical travel time to a water table where the vadose zone is very thick. Depth of penetration (dv2) equals depth of percolating water during a specified time period (dw), divided by the volumetric water content at field capacity (θ): $dv2 = dw/\theta$. Dividing this value into the thickness of the vadose zone provides an estimate of how long it will take water to percolate below the rooting zone to reach the water table if no preferential flow paths occur.

Method Selection Considerations: **Advantages:** (1) Provides estimates of flux for an entire area, rather than point estimates; and (2) relatively simple if most parameters in the water budget equation can be estimated with acceptable accuracy or set equal to zero. **Disadvantages:** (1) Accurate field measurement of some parameters, such as evapotranspiration, is difficult and field measurement of all required parameters is expensive and time consuming; (2) errors in measurement or estimation of components (inflow and outflow, evapotranspiration, rainfall, and ambient temperature) might accumulate in flux estimates; (3) difficult to use where water table is high and changes in water storage are minimal; (4) contaminant chemical reactions in soil solution, which change water transmission and water holding properties, reduce accuracy of estimates; (5) flux calculations based on soil-water storage changes will be underestimated in highly structure soils where water flow occurs primarily in cracks and macropores; and (6) in poorly leveled fields, water might pond in low spots, and run off rapidly in other areas, resulting in actual local fluxes, which can vary considerably from average fluxes calculated assuming uniform water application.

Frequency of Use: Relatively common (most vadose zone computer models use some form of water budget)

Standard Methods/Guidelines: Wagenet (1986).

Sources for Additional Information: Everett et al. (1983), Wilson (1980, 1982). See also, Table 7-6.

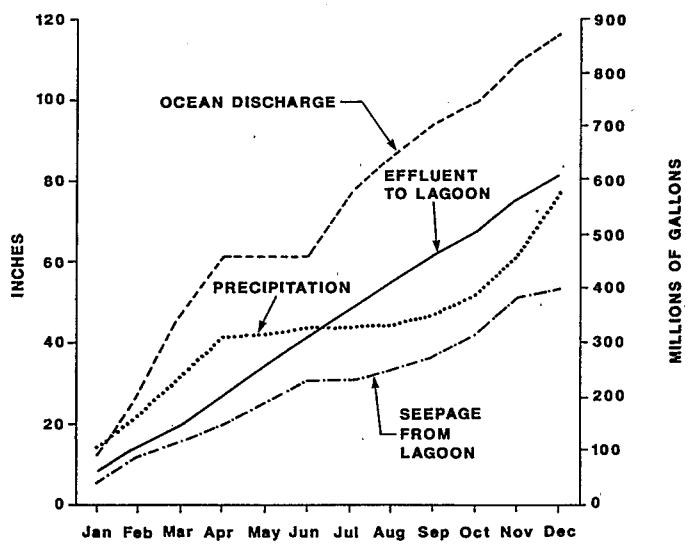

Figure 2A - Cummulative Water Balance Plot.

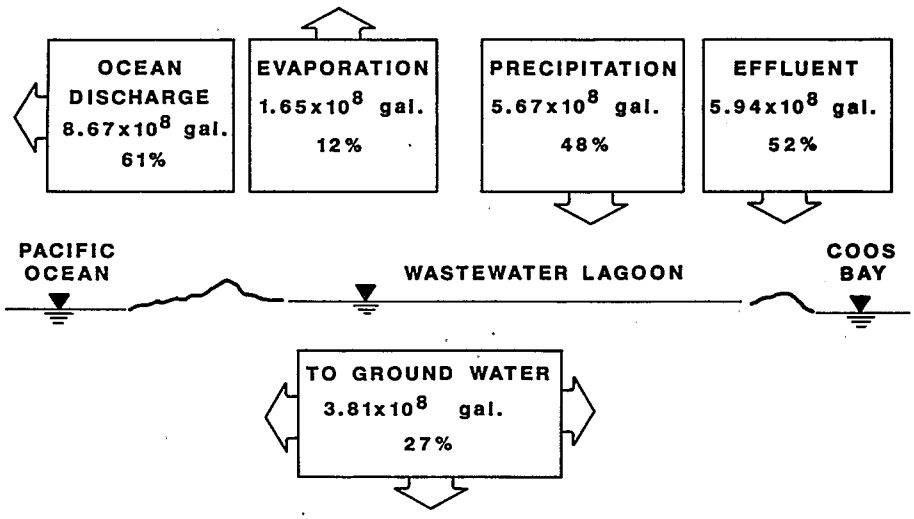

Figure 7.5.1 **Schematic annual cumulative water balance to determine seepage from a wastewater lagoon to ground water (Wells, 1988, by permission).**

7.5 WATER FLUX (UNSATURATED ZONE)

7.5.2 Soil Moisture/Matric Potential Methods

Other Names Used to Describe Method: Hydraulic gradient/unit hydraulic gradient methods, instantaneous profile method (Section 7.2.1), draining profile methods (7.2.2).

Uses at Contaminated Sites: Estimating water flux in the vadose zone.

Method Description: A variety of methods are available to estimate flux in the vadose, based on measurements of changes in soil moisture and/or matric potential with depth and over time. Depending on the specific method, various types of calibration curves, such as matric potential versus water content and hydraulic conductivity as a function of matric potential and/or water content, can be used. The **instantaneous profile** method (Section 7.2.1) and various **draining profile** methods (Section 7.2.2) can be used to calculate water flux. The **hydraulic gradient** method uses the basic approach of the instantaneous profile method (Section 7.2.1), except that evapotranspiration and infiltration of natural precipitation can be allowed. Hydraulic gradients in the unsaturated zone are measured in the subsurface by installing tensiometers or psychrometers (Sections 6.2.1 and 6.2.2). For each textural change, calibration curves are required to relate negative pressure measurement to water content (moisture retention curves, see Section 6.4.1) and water content to unsaturated hydraulic conductivity (see methods allowing measurement of the $K(\theta)$ function in Table 7-1). The **unit hydraulic gradient** method is similar to the hydraulic gradient method, except that a hydraulic gradient of 1 is assumed, requiring only one pressure measuring unit at each depth of interest. Curves relating water content to matric potential (Section 6.3.1), and water content to hydraulic conductivity, allow calculation of the amount of water flowing at the time of each measurement, and measurements taken over time allow calculation of water flux. Alternatively, curves directly relating hydraulic conductivity to matric potential can be used (see Table 7-1).

Method Selection Considerations: **Instantaneous Profile:** See Section 7.2.1. **Draining Profile:** See Section 7.2.2. **Hydraulic Gradient Advantages:** Allows accurate measurement over a relatively large area. **Hydraulic Gradient Disadvantages:** (1) Is relatively expensive to install enough units to characterize spatial variability for statistical analysis; (2) generally is restricted to shallow depths in the vadose zone and might not be suitable for ponds or landfills; (3) results are subject to hysteresis in the calibration curves (i.e., water content-pressure relations differ depending on whether the soil is wetting or drying.); (4) requires obtaining calibration curves (water content versus matric potential and hydraulic conductivity as a function of water content/matric potential) for each change in texture; (5) requires measurement units in depthwise increments throughout the vadose zone, and gradients across layers might suggest vertical flow when horizontal flow is actually predominant; and (6) might not be suitable at sites underlain by fractured media. **Unit Hydraulic Gradient Advantages:** Simpler and less expensive than the unit hydraulic gradient method because fewer calibration relationships are required. **Unit Hydraulic Gradient Disadvantages:** (1) A large number of units are still required to characterize spatial variability; (2) the assumption of unit hydraulic gradients might not apply, particularly in layered media; (3) might not be suitable for ponds or landfills; and (4) as with the hydraulic gradient method, calibration measurements are required for each change in texture and results are subject to hysteresis in calibration curves.

Frequency of Use: Commonly used in research applications, less commonly used for monitoring flux at contaminated sites.

Standard Methods/Guidelines: Everett et al. (1983) describe steps, equations, and sample calculations for several draining profile and hydraulic gradient methods.

Sources for Additional Information: Bouwer and Jackson (1974), Everett et al. (1983), Wilson (1980, 1982). See also, Table 7-6.

7.5 WATER FLUX (UNSATURATED ZONE)

7.5.3 Tracers

Other Names Used to Describe Method: Chloride mass balance, bomb-pulse radionuclides (tritium, chlorine-36), stable isotopes (deuterium and oxygen-18), other tracers.

Uses at Contaminated Sites: Estimating flux and velocity.

Method Description: A wide variety of tracers can be used to estimate flux and velocity in the vadose zone. The **chloride mass-balance flux** method is a geochemical technique in which vertical profiles of chloride concentration are developed by analysis of soil samples. Flux is calculated based on assumed flux contributed to the soil from precipitation. The **tritium** and **chloride-36 flux methods** are used to identify water that has infiltrated in the last 30 to 40 years (see Section 4.3.5). The technique involves extracting soil water from core samples and analyzing for tritium concentration (liquid scintillation counting technique) or extracting chloride as AgCl for analysis of chloride-36 on using a tandem accelerator mass spectrometer. The **stable isotope flux method** is a relatively new method based on the movement of deuterium and oxygen-18 in water molecules through the vadose zone (the same isotopes have long been used to date ground water [see Section 4.3.4]). Water from soil cores is extracted using a vacuum distillation procedure and the soil water is processed using CO2/H2O equilibration or hydrogen reduction for analysis of stable isotope ratios on a ratio mass spectrometer. **Velocity methods:** A conservative tracer (iodide, bromide) is introduced into the liquid source. Samples obtained from suction samplers and/or free drainage samplers at successive depths are used to plot tracer breakthrough. **Artificial tracers** are used by applying a known amount of a conservative tracer, such as chloride or bromide, to the ground surface and collecting samples (from vertically spaced suction and/or free drainage samplers) at intervals to trace the speed of flow. Analysis of changes in concentration with time also allows estimation of flux by mass balance analysis.

Method Selection Considerations: **Chloride Mass-Balance Advantages:** Is relatively inexpensive and easy to use. **Chloride Mass Balance Disadvantages:** Is inaccurate if the following key assumptions do not apply: (1) Average rate of chloride deposition from precipitation to the soil is constant; and (2) chloride does not move below the root zone by preferential flow paths. **Bomb-Pulse Advantages:** Good method for determining whether water has infiltrated in the last 30 to 40 years. **Bomb-Pulse Disadvantages:** Extraction and analytical techniques are relatively complex and expensive and required equipment might not be readily available. **Stable Isotope Advantages:** In addition to estimating recharge rate, other soil-water movement processes, such as evaporation and liquid/vapor flux, can be estimated. **Stable Isotope Disadvantages:** (1) Extraction and analytical techniques are relatively complex and expensive and required equipment might not be readily available; (2) requires sampling to be done during a lengthy period of little or no precipitation, or infiltration into the soil from other sources will occur (i.e., the method is restricted to arid and semi-arid areas); and (3) requires vertical movement of soil water because significant lateral soil-water movement would invalidate assumptions used to calculate flux. **Artificial Tracer Velocity Advantages:** (1) Direct and simple method; (2) reflect flow in actual pores if free-drainage samplers are used; and (3) more accurate than methods requiring measurements of parameters in Darcy's equation. **Artificial Tracer Velocity Disadvantages:** (1) Use of nonconservative tracers (i.e., tracers that move slower than the velocity of water) will underestimate flux/velocity; (2) use of suction samplers might alter flow field and suction samplers cannot be used to sample soil water in very dry soil; (3) in structured media, actual velocity might be higher than measured because of flow in cracks (can be dealt with by also using zero-tension samplers [Section 9.3.1]); (4) if velocities are slow, long time periods might be required for tests; and (5) average velocity of water-borne tracers might not be the same as average velocity of chemical liquids.

Frequency of Use: **Tracer velocity:** Relatively common.

Standard Methods/Guidelines: ASTM Draft Guide for Comparison of Techniques to Quantify the Soil-Moisture Flux (in preparation).

Sources for Additional Information: Everett et al. (1983). See also, Table 7-6 and Sections 4.3.6 and 4.3.7.

7.5 WATER FLUX (UNSATURATED ZONE)

7.5.4 Soil-Water Flux Meters

Other Names Used to Describe Method: Soil water flowmeter, direct flow/intercepting/hydraulic-resistance type, thermal/heat probe type.

Uses at Contaminated Sites: Measuring soil-water flux (amount of water moving through a unit cross-sectional area of soil in a unit time period).

Method Description: Two major types of instruments have been developed for direct measurement of in situ unsaturated soil-water flux: (1) Units that measure flow directly (intercepting meters), and (2) thermal meters, which measure the movement of a thermal pulse in a porous cup. The intercepting-type **hydraulic-resistance** meter, first developed by Cary (1968, 1970) and refined by Dirksen (1972, 1974), involves intercepting part or all of the soil-water flux and determining its magnitude by measuring the hydraulic-head loss across the inflow and outflow portions of the meter. Tensiometers are installed nearby to monitor head loss in the undisturbed soil and hydraulic resistance of the valve in the meter adjusted to match conditions in the soil. A recent refinement combines features of the methods by Dirksen (1974) and by Duke and Haise (1973--see Section 9.2.6). In this instrument, soil-water flow is intercepted by a porous plate in which the suction is automatically adjusted to maintain the same matric potentials above the plate and in the surrounding undisturbed soil (Figure 7.5.4). Both the hydraulic-resistance type and suction type meters require excavation of a pit and installation of the meter in the side of the pit at the desired depth.

Method Selection Considerations: **Advantages:** (1) Information on hydraulic conductivity or hydraulic gradient is not required; (2) can provide reasonable direct water flux measurements if properly used; (3) most useful for localized and specialized studies; (4) suction-type meter overcomes most of the major disadvantages of other types by eliminating the need for extensive laboratory or in situ calibrations, is not adversely affected by air bubbles, and can sample flux over a larger area. **Disadvantages:** (1) Is relatively expensive and complex method; (2) localized nature of measurement does not allow estimating flux over large areas unless many flux meters are installed; (3) soil is disturbed during installation of most types and might interrupt normal soil-water flow patterns; (4) calibration procedures are tedious, especially for multilayered media (Dirksen hydraulic-resistance type and suction type do not require much calibration); (5) requirement for trench installation limits use to relatively shallow depths; (6) hydraulic-resistance type meters require fairly wet soils to perform effectively and the presence of air bubbles in soil water or in filter cloth and tubing will reduce flow into the meter; (7) most types involve the measurement of flow in disturbed soil, and meters are especially difficult to install in layered media without affecting flow lines; (8) most units require contact with relatively fine-grained porous media and will not work well in coarse-grained or fractured media (not a problem with suction type); and (9) thermal meter will give erroneous readings if chemical waste fluids have different heat conducting properties than water and have not been thoroughly tested in the field.

Frequency of Use: Uncommon.

Standard Methods/Guidelines: **Hydraulic-resistance type:** Wagenet (1986); **Suction type:** van Grinsven et al. (1988).

Sources for Additional Information: Bouwer and Jackson (1974), Everett et al. (1983), Wilson (1980). See also, Table 7-6.

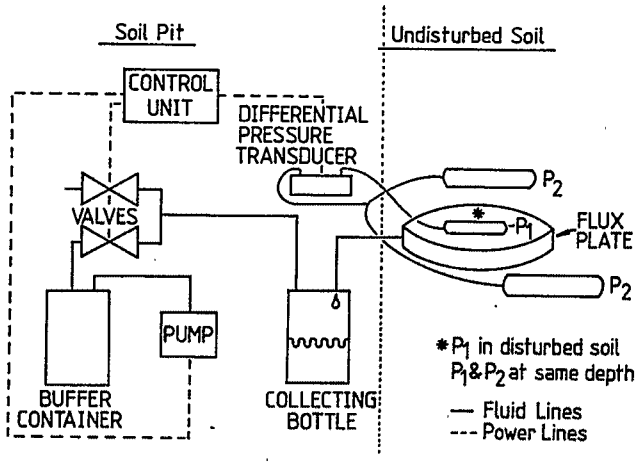

Figure 7.5.4 **Schematic diagram of suction soil-water flux meter components as used in field; P_1, P_2, and P_3 are tensiometers (van Grinsven et al., 1988, by permission).**

7.5 WATER FLUX (UNSATURATED ZONE)

7.5.5 Velocity Estimation

Other Names Used to Describe Method: Velocity-flux/velocity-long-term infiltration calculation, velocity from suction cups.

Uses at Contaminated Sites: Measuring or estimating velocity with which water travels in the vadose zone.

Method Description: **Flux or long-term infiltration calculation:** Velocity can be calculated by dividing flux values obtained by methods described above (Sections 7.5.1 to 7.5.4), or dividing the long-term infiltration rate (as determined using methods in Sections 7.1.1 or 7.1.4) by average water content. Both methods assume that: (1) Hydraulic gradients are unity, (2) an average water content can be determined, (3) flow is vertical, and (4) a homogenous media exists. Indirect estimates of velocity can be obtained using **suction** samplers (Section 9.2). Apparent vertical velocity is estimated by observing the time it takes a wetting front from a surface source to reach vertically placed suction samplers, as indicated by a change from little or no soil-water retrieval during sampling to ready collection of soil water during suction. Section 7.5.1 (flux water budget methods) describes a simplified method for estimating velocity using **water budget data**, and 7.5.3 (tracers) describes use of **tracers** to estimating velocity.

Method Selection Considerations: **Flux/Infiltration Calculation Advantages:** (1) Is simple and inexpensive when coupled with other methods; and (2) is suitable for making a preliminary estimate of travel time of pollutants in the vadose zone. **Flux/Infiltration Calculation Disadvantages:** (1) Underestimates velocity in structured media; (2) is not valid if perching layers cause lateral flow; (3) for multi-layered media, an average moisture content value might be difficult to obtain; (4) might be difficult to obtain equivalent water content values where liquid wastes have different properties than water.

Frequency of Use: **Flux/infiltration calculations:** Relatively common.

Standard Methods/Guidelines: **Flux calculation:** Bouwer (1980), Wilson (1980); **Suction cup:** Everett et al. (1983).

Sources for Additional Information: Wilson (1982), Everett et al. (1983); **Case studies:** Biggar and Nielsen (1976), Jury and Sposito (1985).

7.5 WATER FLUX (UNSATURATED ZONE)

7.5.6 Physical and Empirical Equations

Other Names Used to Describe Method: --

Uses at Contaminated Sites: Estimating water flux in the vadose zone.

Method Description: A soil-physics based approach to quantifying soil-water flux requires measurement or estimation of hydraulic characteristic data and the use of physically or empirically-based equations to calculate flux. Any technique that measures hydraulic conductivity as a function of water content or matric potential (see Section 6.3.1 and Section 7.2 generally) allows calculation of water flux if the appropriate parameter (water content or matric potential) is monitored. Most of the methods in Section 7.5.2 (Soil Moisture/Matric Potential Methods) use this approach in one way or another. Numerous physically- and empirically-based equations have been developed to model infiltration and flow in the unsaturated zone. Sections 7.1.4 (Infiltration Equations) and Section 7.2.8 (Physical/Empirical Equations and Relationships) provide an overview of these approaches. The **catalog-of-hydraulic-properties** approach involves the use of "typical" hydraulic properties associated with physical soil properties, such as texture, porosity, and bulk density, to estimate both saturated and unsaturated hydraulic conductivity, provided that physical characteristics of the soils of interest are similar to soils for which data are available.

Method Selection Considerations: **Physical and empirical equations:** See Sections 7.1.4 and 7.2.8. **Catalog-of-hydraulic-properties advantages:** (1) Simple, quick, and can be used to estimate relative variations in hydraulic conductivity caused by stratification; and (2) is good for sensitivity analysis. **Catalog-of-hydraulic-properties disadvantages:** Might be prone to large errors because of lack of comparability between soil properties and because of spatial variability in soil properties.

Frequency of Use: Most methods for measuring soil hydraulic properties are based on, or require the use of, one or more physical and/or empirical models. Estimation of hydraulic properties from other soil physical properties is commonly used to obtain "ballpark" estimates of flux.

Standard Methods/Guidelines: --

Sources for Additional Information: Warrick et al. (1977). See generally, references for Sections 7.1.4, 7.2.8, and Table 7-5.

Table 7-3 Reference Index for Measurement of Unsaturated Hydraulic Conductivity and *Flux in the Vadose Zone*

Topic	References
Reviews	Bouma (1977), Bouma et al. (1974), Bouwer and Jackson (1974), Dirksen (1991), Green et al. (1986), Hendrickx (1990), Hillel and Benyamini (1974), Stephens and Neuman (1982a), U.S. EPA (1986)
Instantaneous Profile	Ahuja et al. (1976), Arya et al. (1975), Baker et al. (1974), Cassel (1974), Dane (1980), Davidson et al. (1969), Flühler et al. (1976), Hillel and Benyamini (1974), Hillel et al. (1972), Hsieh and Enfield (1974), Klute (1972), Nagpal and DeVries (1976), Nielsen and Biggar (1973), Nielsen et al. (1964, 1973), Ogata and Richards (1957), Richards et al. (1956), Roberts (1984), Rose and Krishnan (1967), Rose et al. (1965), Schuh and Cline (1990), Shouse et al. (1992), Simmons et al. (1979), Stone et al. (1973), Stoner (1985), Unlu et al. (1989, 1990), van Bavel et al. (1968), Warrick and Amoozegar-Fard (1980), Watson (1966); In Situ Soil Block: Cheng et al. (1975), Luxmoore et al. (1981); Tensiometers/Soil Cores: Cassel (1971), Carvallo et al. (1976), Miller et al. (1965)
Draining Profile	Moisture Profile: Chong et al. (1981), Dane (1980), Dane and Hruska (1983), Libardi et al. (1980), Luxmoore et al. (1981), Sisson et al. (1980); Pressure Profile: Ahuja et al. (1980, 1982, 1988), Schuh et al. (1984), Wall and John (1982)
Tension Infiltrometers	Designs: Ankeny et al. (1988), Perroux and White (1988); Hydraulic Conductivity: Ankeny et al. (1991), Baumgartner et al. (1987), Clothier and Smettem (1990), Cook (1991), Elrick et al. (1987), Havlena and Stephens (1992), Reynolds and Elrick (1991), Sai and Anderson (1991), Smettem and Clothier (1989), Warrick (1992), White and Perroux (1987, 1989); Sorptivity/Diffusivity: Chong and Green (1983), Clothier and Smettem (1990), Clothier and White (1981), Dirksen (1975), Russo and Bresler (1980), Smettem and Clothier (1989), Smiles and Harvey (1973), Walker and Chong (1986), White and Perroux (1987, 1989); Infiltration/Macroporosity: Ankeny et al. (1990), Clothier et al. (1981a), Jarvis et al. (1984), Watson and Luxmoore (1986), Wilson and Luxmoore (1988).
Crust-Imposed Steady Flux	Anderson and Bouma (1977-laboratory), Baker (1977), Baker and Bouma (1976), Booltinck et al. (1991), Bouma (1975), Bouma and Denning (1972), Bouma et al. (1971), Hillel and Gardner (1969, 1970), Reinds (1988-laboratory), Roberts (1984), Spaans et al. (1990), Stoner (1985)
Sprinkler/Dripper Methods	Sprinkler-Imposed Flux: Chong (1983-sorptivity), Hillel and Benyamini (1974), Hills et al. (1989), McQueen (1963), Morin et al. (1967), Rawitz et al. (1972), Reinds (1988-laboratory), van de Pol et al. (1977), Youngs (1964-laboratory); Dripper Infiltrometers: Bridge and Ross (1985), Shani et al (1987); Infiltration Rates: See Section 7.1.2.
Entrapped Air Method	Dixon and Linden (1972), Peck (1965), Starr et al. (1978), Takagi (1960); see also, references on effects of entrapped air on hydraulic conductivity in Table 7-4

Table 7-4 Reference Index for Measurement of Saturated Hydraulic Conductivity in the Vadose Zone

Topic	References
Saturated Hydraulic Conductivity (Above Shallow Water Table)	
Reviews	Amoozegar and Warrick (1986), Boersma (1965), Bouwer and Jackson (1974), Hamilton et al. (1981), Hendrickx (1990), Kessler and Oosterbaan (1974), Lambe (1955), Sai and Anderson (1991), Stephens et al. (1988), Winger (1960), Youngs (1991); Method Comparisons: Havlena and Stephens (1992), Lee et al. (1985), Reynolds et al. (1983), Roberts (1984), Sai and Anderson (1991), U.S. EPA (1986); Chemical Effects on Clays: Brown (1988), Roberts (1984)
Effect of Entrapped Air	Bouwer (1966, 1978), Bouwer and Jackson (1974), Chahal (1964), Corey (1957), Jarrett and Fritton (1978), McWhorter et al. (1973), Peck (1969), Stephens et al. (1984)
Temperature Effects	Chahal (1964), Constantz (1982), Giakoumakis and Tsakiris (1991), Haridasan and Jensen (1972), Hopmans and Dane (1986)
Cylinder Infiltrometers	Aronovici (1955), Bouwer (1963), Burgy and Luthin (1956), Dixon (1975-sealed infiltrometer), Havlena and Stephens (1992), Johnson (1963), Priksat et al. (1992), Reynolds and Elrick (1990), Roberts (1984), Sai and Anderson (1991), Scotter et al. (1982), Swartzendruber and Olsen (1961a,b); Compacted Liner Tests: Daniel (1984, 1989), Daniel and Trautwein (1986), Elsbury et al. (1988), Panno et al. (1991), Pederson et al. (1988), Rogowski (1990), Sai and Anderson (1991), U.S. EPA (1989), Youngs (1991)
Constant-Head Borehole Infiltration	Amoozegar (1989a,b), Banton (1993), Boersma (1965), Bouwer (1978), Elrick and Reynolds (1992), Fritton et al. (1986), Havlena and Stephens (1992), Heinen and Raats (1990), Kanwar et al. (1987), Philip (1985a), Picornell and Guerra (1992), Reynolds et al. (1983, 1985), Stephens et al. (1987, 1988), Talsma (1987), Zanger (1953)
Guelph Permeameter	Elrick and Reynolds (1992), Elrick et al. (1987, 1988), Havlena and Stephens (1992), Heinen and Raats (1990), Jabro and Fritton (1990), Lee et al. (1985), Logsdon et al. (1990), Reynolds and Elrick (1985a, 1985b, 1986, 1987), Reynolds et al. (1983), Sai and Anderson (1991), Stephens et al. (1988), Talsma (1987), Talsma and Hallam (1980), Wilson et al. (1989)
Air-Entry Permeameter	Aldabagh and Beer (1971), Bouma (1983), Bouwer (1966, 1978), Bresler et al. (1978-K^{unsat}), Havlena and Stephens (1992), Lee et al. (1985), Reynolds et al. (1983), Roberts (1984), Russo and Bresler (1980), Sai and Anderson (1991), Shani et al. (1987), Stephens et al. (1988), Topp and Binns (1976), U.S. EPA (1981), Youngs (1991)
Double Tube Method	Boersma (1965), Bouma (1971, 1983), Bouma and Hole (1971), Bouwer (1961, 1962, 1964a, 1978), Bouwer and Rice (1964, 1967), Brust et al. (1968), Kessler and Oosterbaan (1974), U.S. EPA (1981)
Infiltration Gradient	Bouwer (1964a, 1978), Bouwer and Jackson (1974), Bouwer and Rice (1967), Rice (1967)

Table 7-4 (cont.)

Topic	References
In Situ Monoliths	Cube Method: Bouma and Dekker (1981), Roberts (1984); Column Method: Baker and Bouma (1975), Bouma (1980), Bouma et al. (1976, 1979, 1981), Vroon et al. (1988); Column-Crust Method: Bouma (1982); Monoliths: Jager and van der Voort (1966), Mielke (1973), Sai and Anderson (1991), Stibbe et al. (1970), Tzimas (1979)
Percolation Test	Barbarick et al. (1976), Chan (1976), Elrick and Reynolds (1986), Hill (1966), Jabro and Fritton (1990), U.S. EPA (1980), U.S. PHS (1969); Percolation Test Relationship to Ksat: Bicki et al. (1988), Bouma (1971), Fritton et al. (1986), Healy and Laak (1973), Jabro and Fritton (1990), Mellon (1973), Paige and Veneman (1993), Winneberger (1974)
Saturated Hydraulic Conductivity (Deep Water Table)	See Section 7.4

Table 7-5 Reference Index for Physical and Empirical Equations and Models of Hydraulic Properties in the Vadose Zone

Topic	References
Infiltration/Saturated Hydraulic Conductivity	
Infiltration Theory/Equations	Bouwer (1964b), Brandt et al. (1971), Broadbridge and White (1988), Childs (1967), Clothier et al. (1981b), Hanks and Bowers (1962), Hanks et al. (1969), Hogarth et al. (1989), Horton (1935, 1939, 1940), Knight (1983), Knight and Philip (1974), Kutilek (1980), Panikar and Nanjappa (1977), Parlange (1972), Parlange and Smith (1976), Parlange et al. (1982, 1985), Parr and Bertrand (1960), Philip (1954, 1957a,b, 1958a,b, 1969, 1973, 1975, 1985b, 1989a,b), Philip and Knight (1974), Pullan (1990), Raats (1973), Reichardt et al. (1972), Richards (1931, 1965), Rijtema and Wassink (1969), Rubin and Steinhardt (1963), Rubin et al. (1964), Sharma et al. (1980), Stallman (1967), Swartzendruber (1987a,b), Swartzendruber and Clague (1989), Swartzendruber and Hogarth (1991), Talsma and Parlange (1972), Warrick (1985), Warrick and Hussen (1993), White and Broadbridge (1988), White and Sully (1987), White et al. (1989), Wilson and Luthin (1963), Wooding (1968)
Unsaturated Hydraulic Conductivity	
Parameter Identification	Dane and Hruska (1983), Hornung (1983), Kool and Parker (1988), Kool et al. (1985, 1987), Parker et al. (1985), Ravi and Jennings (1990-laboratory measurements), Sisson et al. (1980), van Dam et al. (1992), Van Genuchten et al. (1989), Zachmann (1981, 1982)
Empirical Equations/Models (See also, Table 6-3)	Empirical Equations: Bresler et al. (1978), Brooks and Corey (1964, 1966), Gardner (1958), Laliberte et al. (1966-values for use with BC equation), Messing (1989), Raats and Gardner (1971), Ritjema (1965), Wind (1955); Macroscopic Models: Irmay (1954), Mualem (1978); Statistical Models: Burdine (1953), Childs and Collis-George (1950), Marshall (1958), Millington and Quirk (1959, 1961, 1964), Mualem (1976a), Mualem and Dagan (1978), Purcell (1949), Rieu and Sposito (1991a,b), Ross and Smettem (1993), Vachaud (1967), Van Genuchten (1979, 1980), Weeks and Richards (1967); Use/Comparisons: Bruce (1972), Brust et al. (1968), Brutsaert (1967), Green and Corey (1971), Jackson (1972), Jackson et al. (1965), Kunze et al. (1968), Nielsen et al. (1960), Rogers and Klute (1971), Roulier et al. (1972), Stockton and Warrick (1971),
Hydraulic Properties from Soil Physical Properties (See also, Table 6-3)	Ahuja et al. (1984), Alexander and Skaggs (1987), Anderson and Bouma (1973), Basak (1972), Bloeman (1980), Burdine (1953), Campbell (1974), Clapp and Hornberger (1978), Clausnitzer et al. (1992), de Jong (1982), Hanks et al. (1969), Laliberte and Corey (1967), Marshall (1958), Mason et al. (1957), McCuen et al. (1981), Mehuys et al. (1975), Mishra et al. (1989), Mualem (1976b), Puckett et al. (1985), Rawls and Brakensiek (1985), Rawls et al. (1982), Reichardt et al. (1975), Rogowski (1972), Saxton et al. (1986), Schuh et al. (1988), Tyler and Wheatcraft (1989), Van Genuchten and Nielsen (1985), White and Perroux (1989-sorptivity), Williams et al. (1992), Wösten and Van Genuchten (1988)

Table 7-6 Reference Index for Water Flux Methods

Topic	References
General Reviews	Allison (1987), Gee and Hillel (1988), Roth et al. (1990), Simmons et al. (1979), U.S. EPA (1986-vadose zone travel time), Wagenet (1986)
Water Budget	Fenn et al. (1975), Gee and Hillel (1988), Jensen (1974), Kmet (1982), Simmers (1987), Sokolow and Chapman (1974), Warrick and Amoozegar-Fard (1981), Zepp and Belz (1992); Thornthwaite Method: Dunne and Leopold (1978), Thornethwaite and Mather (1957), Wilmott (1977); Case Studies: Aguilar and Aldon (1991), Dreiss and Anderson (1985), Fenn et al. (1975), Forslund and Daily (1990), Mather and Rodriguez (1978), Orr et al. (1990), Panno et al. (1991), Young and Clapp (1989)
Soil Moisture/Potential	Case Studies: Aguilar and Aldon (1991), Enfield et al. (1973), LaRue et al. (1968), Simmons et al. (1979), van Bavel et al. (1968)
Tracers	Chloride: Allison (1987), Allison and Huges (1978, 1983), Allison et al. (1985), Johnston (1987), Knowlton et al. (1992), Scanlon (1991), Sharma and Hughes (1985), Sukhija et al. (1988), Walker et al (1991); Tritium: Allison and Huges (1978), Evans et al. (1976), Frissel et al. (1974), Knowlton et al. (1992), Phillips et al. (1988); Other: Allison et al. (1985), Frissel et al. (1974), Knowlton et al. (1992), Sharma and Hughes (1985)
Soil-Water Flux Meters	Thermal: Byrne (1971), Byrne et al. (1967, 1968); Hydraulic Resistance: Cary (1968, 1970, 1971, 1973), Dirksen (1972, 1974); Suction-Hydraulic Resistance: van Grinsven et al. (1988).

SECTION 7 REFERENCES

Abele, G., et al. 1980. Infiltration Characteristics of Soils at Apple Valley, Minn.; Clarence Cannon Dam, Mo.; and Deer Creek Lake, Ohio, Land Treatment Sites. CRREL Special Report 80-36, U.S. Army Cold Regions Research and Engineering Laboratory, Hanover, NH, 52 pp. [Test basins]

Ahuja, L.R., S.A. El-Swaify, and A. Rahman. 1976. Measuring Hydrologic Properties of Soil with a Double-Ring Infiltrometer and Multiple-Depth Tensiometers. Soil Sci. Soc. Proc. 40:494-499. [Instantaneous profile]

Ahuja, L.R., R.E. Green, S.K. Chong, and D.R. Nielsen. 1980. A Simplified Functions Approach for Determining Soil Hydraulic Conductivities and Water Characteristics In Situ. Water Resources Research 16:947-953. [Draining pressure profile]

Ahuja, L.R., R.E. Green, S.K. Chong, and D.R. Nielsen. 1982. Reply to the Comments on "A Simplified Functions Approach for Determining Soil Hydraulic Conductivities and Water Characteristics In Situ." Water Resources Research 18:1300-1301. [Draining pressure profile]

Ahuja, L.R., J.W. Naney, R.E. Green, and D.R. Nielsen. 1984. Macroporosity to Characterize Spatial Variability of Hydraulic Conductivity and Effects of Land Management. Soil Sci. Soc. Am. J. 48:499-702.

Ahuja, L.R., J.D. Ross, R.R. Bruce, and D.K. Cassel. 1988. Determining Unsaturated Hydraulic Conductivity from Tensiometric Data Alone. Soil Sci. Soc. Am. J. 52:27-34. [Draining pressure profile]

Aguilar, R. and E.F. Aldon. 1991. Seasonal Water Flux and Potential for Leaching in a Semiarid Rangeland Soil. Ground Water Management 5:669-683. [Water balance, soil moisture monitoring]

Aldabagh, A.S.Y. and C.E. Beer. 1971. Field Measurement of Hydraulic Conductivity Above a Water Table with Air-Entry Permeameter. Trans. Am. Soc. Agric. Eng. 14:29-31.

Alexander, L. and R.W. Skaggs. 1987. Predicting Unsaturated Hydraulic Conductivity from Soil Texture. J. of Irr. and Drain. Eng. 113:184-197. [Estimation from soil-water retention relationship]

Allison, G.B. 1987. A Review of Some of the Physical, Chemical and Isotopic Techniques for Estimating Groundwater Recharge. In: Estimation of Natural Groundwater Recharge, I. Simmers (ed.), Reidel, Dordrecht, pp. 49-72. [Chloride tracer]

Allison, G.B. and M.W. Hughes. 1978. The Use of Environmental Chloride and Tritium to Estimate Total Recharge to an Unconfined Aquifer. Aust. J. Soil Res. 16:181-195.

Allison, G.B. and M.W. Hughes. 1983. The Use of Natural Tracers as Indicators of Soil-Water Movement in a Temperate Semi-Arid Region. J. Hydrology 60:157-173. [Chloride tracer]

Allison, G.B., W.J. Stone, and M.W. Hughes. 1985. Recharge in Karst and Dune Elements of a Semi-Arid Landscape as Indicated by Natural Isotopes and Chloride. J. Hydrology 76:1-26.

American Society for Testing and Materials (ASTM). 1988. Standard Test Method for Infiltration Rate of Soils in Field Using Double-Ring Infiltrometers. D3385-88, (Vol. 4.08), ASTM, Philadelphia, PA.

American Society for Testing and Materials (ASTM). 1990a. Guide for Comparison of Field Methods for Determining Hydraulic Conductivity in the Vadose Zone. D5126-90, (Vol. 4.08), ASTM, Philadelphia, PA. [Saturated: single-/double-ring infiltrometer, double tube, air-entry permeameter, borehole permeameter (constant head-borehole infiltration, Guelph permeameter), empirical; unsaturated: instantaneous profile, crust, empirical]

American Society for Testing and Materials (ASTM). 1990b. Standard Test Method for Field Measurement of Infiltration Rate Using a Double-Ring Infiltrometer With a Sealed-Inner Ring. D5093-90, (Vol. 4.08), ASTM, Philadelphia, PA.

Amoozegar, A. 1989a. A Compact Constant-Head Permeameter for Measuring Saturated Hydraulic Conductivity in the Vadose Zone. Soil Sci. Soc. Am. J. 55:1356-1362. (See also, errata for equations 1 and 2 in Soil Sci. Soc. Am. J. 54:216.)

Amoozegar, A. 1989b. Comparison of the Glover Solution with the Simultaneous Equations Approach for Measuring Hydraulic Conductivity, Soil Sci. Soc. Am. J. 53:1362-1367.

Amoozegar, A. and A.W. Warrick. 1986. Hydraulic Conductivity of Saturated Soils: Field Methods. In: Methods of Soil Analysis, Part 1, 2nd edition, A. Klute (ed.), Agronomy Monograph No. 9, American Society of Agronomy, Madison, WI, pp. 735-798.

Anderson, J.L. and J. Bouma. 1973. Relationship Between Saturated Hydraulic Conductivity and Morphometric Data of an Argillic Horizon. Soil Sci. Soc. Am. Proc. 37:408-413.

Anderson, J.L. and J. Bouma. 1977. Water Movement Through Pedal Soils II: Unsaturated Flow. Soil Sci. Soc. Am. J. 41:419-423.

Ankeny, M.D., T.C. Kaspar, and R. Horton. 1988. Design for an Automated Tension Infiltrometer. Soil Sci. Soc. Am. J. 52:893-896.

Ankeny, M.D., T.C. Kaspar, and R. Horton. 1990. Characterization of Tillage and Traffic Effects on an Unconfined Infiltration Measurement. Soil Sci. Soc. Am. J. 54:837-840. [Tension infiltrometer]

Ankeny, M.D., M. Ahmed, T.C. Kaspar, and R. Horton. 1991. Simple Field Method for Determining Unsaturated Hydraulic Conductivity. Soil Sci. Soc. Am. J. 55:467-470. [Tension infiltrometer]

Aronovici, V.S. 1955. Model Study of Ring Infiltrometer Performance under Low Initial Soil Moisture. Soil Sci. Soc. Am. Proc. 19:1-6.

Arya, L.M., D.A. Farrell, and G.R. Blake. 1975. A Field Study of Soil Water Depletion Patterns in the Presence of Growing Soybean Roots, 1: Determination of Hydraulic Properties of the Soil. Soil Sci. Soc. Am. Proc. 39:424-436. [Instantaneous profile]

Baker, F.G. 1977. Factors Influencing the Crust Test for In Situ Measurement of Hydraulic Conductivity. Soil Sci. Soc. Am. J. 41:1029-1032.

Baker, F.G. and J. Bouma. 1975. Variability of Hydraulic Conductivity in Two Subsurface Horizons in Two Silt Loam Soils. Soil Sci. Soc. Am. J. 40:210-222. [Column method]

Baker, F.G. and J. Bouma. 1976. Variability of Hydraulic Conductivity in Two Subsurface Horizons of Two Silt Loam Soils. Soil Sci. Soc. Am. J. 40:219-222. [Crust test]

Baker, F.G., P.L.M. Veneman, and J. Bouma. 1974. Limitations of the Instantaneous Profile Method for Field Measurement of Unsaturated Hydraulic Conductivity. Soil Sci. Soc. Am. Proc. 38:885-888.

Banton, O. 1993. Field- and Laboratory-Determined Hydraulic Conductivities Considering Anisotropy and Core Surface Area. Soil Sci. Soc. Am. J. 47:10-15. [Constant-head permeameter]

Barbarick, K.A., A.W. Warrick, and D.F. Poot. 1976. Percolation Tests for Septic Tank Suitability of Typical Southern Arizona Soils. J. Soil and Water Conservation 31:110-112.

Basak, P. 1972. Soil Structure and Its Effect on Hydraulic Conductivity. Soil Science 114:417-422.

Baumgartner, N., D.E. Elrick, and K.L. Bradshaw. 1987. In-Situ Hydraulic Conductivity Measurements of Slowly Permeable Materials Using a Modified Guelph Permeameter and the Guelph Infiltrometer. In: Proc. of the 1st Nat. Outdoor Action Conf. on Aquifer Restoration, Ground Water Monitoring and Geophysical Methods, National Water Well Association, Dublin, OH, pp. 469-481.

Bertrand, A.R. 1965. Rate of Water Intake in the Field. In: Methods of Soil Analysis, 1st edition, C.A. Black (ed.), Agronomy Monograph 9, American Society of Agronomy, Madison, WI, pp. 197-208. (Updated by Peterson and Bubenzer [1986].)

Bicki, T.J., T.E. Fenton, H.D. Luce, and T.A. DeWitt. 1988. Comparison of Percolation Test Results and Estimated Hydraulic Conductivities for Mollisols and Alfisols. Soil Sci. Soc. Am. J. 52:1708-1714.

Biggar, J.W. and D.R. Nielsen. 1976. Spatial Variability of the Leaching Characteristics of a Field Soil. Water Resources Research 12:78-84.

Bloemen, G.W. 1980. Calculation of Hydraulic Conductivities of Soils from Texture and Organic Matter Content. Z. Planzenernaehr, Bodendk. 143:581-605.

Boersma, L. 1965. Field Measurement of Hydraulic Conductivity above a Water Table. In: Methods of Soil Analysis, Part 1, 1st edition, C.A. Black (ed.), Soil Science Society of American, Madison, WI, pp. 234-252.

Booltink, H.W.G., J. Bouma, and D. Gimenez. 1991. Suction Crust Infiltrometer for Measuring Hydraulic Conductivity of Unsaturated Soil Near Saturation. Soil Sci. Soc. Am. J. 55:566-568.

Bouma, J. 1971. Evaluation of the Field Percolation Test and an Alternative Procedure to Test Soil Potential for Disposal of Septic Tank Effluent. Soil Sci. Soc. Am. Proc. 35:871-875. [Double-tube method]

Bouma, J. 1975. Unsaturated Flow Phenomena During Subsurface Disposal of Septic Tank Effluent. J. Environ. Eng. Div. ASCE 191:967-983.

Bouma, J. 1977. Soil Survey and the Study of Water in Unsaturated Soil. Soil Survey Paper 13, Soil Survey Institute, Wageningen, Netherlands.

Bouma, J. 1980. Field Measurement of Soil Hydraulic Properties Characterizing Water Movement Through Swelling Clay Soils. J. Hydrology 45:149-158. [Column method]

Bouma, J. 1982. Measuring the Hydraulic Conductivity of Soil Horizons with Continuous Macropores. Soil Sci. Soc. Am. J. 46:438-441. [Column-crust method]

Bouma, J. 1983. Use of Soil Survey Data to Select Measurement Techniques for Hydraulic Conductivity. Agric. Water Manage. 6:177-190.

Bouma, J. and L.W. Dekker. 1981. A Method of Measuring the Vertical and Horizontal K_{sat} of Clay Soils with Macropores. Soil Sci. Soc. Am. J. 45:662-663. [Cube method]

Bouma, J. and J.L. Denning. 1972. Field Measurement of Unsaturated Hydraulic Conductivity by Infiltration through Gypsum Crusts. Soil Sci. Soc. Am. Proc. 36:846-847.

Bouma, J. and F.D. Hole. 1971. Soil Structure and Hydraulic Conductivity of Adjacent Virgin and Cultivated Pedons at Two Sites: A Typic Argiudoll (Silt Loam) and a Typic Eutrochrept (Clay). Soil Sci. Soc. Am. Proc. 35:316-319. [Double tube method]

Bouma, J., D.I. Hillel, F.D. Hole, and C.R. Amerman. 1971. Field Measurement of Hydraulic Conductivity by Infiltration through Artificial Crusts. Soil Sci. Soc. Am. Proc. 35:362-364.

Bouma, J., F.G. Baker, and P.L.M. Veneman. 1974. Measurement of Water Movement in Soil Pedons above the Water Table. University of Wisconsin-Extension, Geological and Natural History Survey, Information Circular No. 27.

Bouma, J., L.W. Dekker, and H.L. Verlinden. 1976. Drainage and Vertical Hydraulic Conductivity of Some Dutch "Knik" Clay Soils. Agric. Water Manage. 1:67-78. [Column method]

Bouma, J., L.W. Dekker, and J.C.F.M. Haans. 1979. Drainability of Some Dutch Clay Soils: A Case Study of Soil Survey Interpretation. Geoderma 22:193-203. [Column method]

Bouma, J., J.W. Van Hoorn, and G.H. Stoffelsen. 1981. Measuring the Hydraulic Conductivity of Soil Adjacent to Tile Drains in a Heavy Clay Soil in The Netherlands. J. Hydrology 50:371-381. [Column method]

Boutwell, G.P. and R.K. Derric. 1986. Sanitary Landfills in the Saturated Zone. Paper presented at Waste Tech '86, National Solid Waste Management Association, Chicago, IL. (Cited in Sai and Anderson [1991].)

Bouwer, H. 1961. A Double Tube Method for Measuring Hydraulic Conductivity of Soil In Situ Above a Water Table. Soil Sci. Soc. Am. Proc. 25:334-339.

Bouwer, H. 1962. Field Determination of Hydraulic Conductivity above a Water Table with the Double-Tube Method. Soil Sci. Soc. Am. Proc. 26:330-335.

Bouwer, H. 1963. Theoretical Effects of Unequal Water Levels on the Infiltration Rate Determined with Buffered Cylinder Infiltrometers. J. Hydrology 1:29-34.

Bouwer, H. 1964a. Measuring Horizontal and Vertical Hydraulic Conductivity of Soil with the Double-Tube Method. Soil Sci. Soc. Am. Proc. 28:19-23. [Infiltration gradient]

Bouwer, H. 1964b. Unsaturated Flow in Ground-Water Hydraulics. J. Hydraulic Div. ASCE 90(HY5):121-144.

Bouwer, H. 1966. Rapid Field Measurement Air Entry Value and Hydraulic Conductivity of Soil as Significant Parameters in Flow System Analysis. Water Resources Research 2:729-738.

Bouwer, H. 1978. Groundwater Hydrology. McGraw-Hill, New York, NY. [Chapter 5 covers seepage meters, air-entry permeameter, infiltration gradients, and double-tube methods]

Bouwer, H. 1980. Deep Percolation and Ground-Water Management. In: Proc. Deep Percolation Symposium, Arizona Department of Water Resources Report No. 1, pp. 13-19.

Bouwer, H. 1986. Intake Rate: Cylinder Infiltrometer. In: Methods of Soil Analysis, Part 1, 2nd edition, A. Klute (ed.), Agronomy Monograph No. 9, American Society of Agronomy, Madison, WI, pp. 825-844.

Bouwer, H. and R.D. Jackson. 1974. Determining Soil Properties. In: Drainage for Agriculture, J. van Schilfgaarde (ed.), ASA Agronomy Monograph No. 17, American Society of Agronomy, Madison, WI, pp. 611-672.

Bouwer, H. and R.C. Rice. 1963. Seepage Meters in Seepage and Recharge Studies. J. Irrigation and Drainage Division (ASCE) 89(IR1):451-462.

Bouwer, H. and R.C. Rice. 1964. Simplified Procedure for Calculation of Hydraulic Conductivity with the Double-Tube Method. Soil Sci. Soc. Am. Proc. 28:133-134.

Bouwer, H. and R.C. Rice. 1967. Modified Tube Diameters for the Double-Tube Apparatus. Soil Sci. Soc. Am. Proc. 31:437-439.

Brakensiek, D.L., H.B. Osborn, and W.J. Rawls. 1979. Field Manual for Research in Agricultural Hydrology. U.S. Dept. Agric. Handbook 224.

Brandt, A., E. Bresler, N. Diner, I. Ben-Asher, J. Heller, and D. Goldberg. 1971. Infiltration from a Trickle Source: I. Mathematical Models. Soil Sci. Soc. Am. Proc. 35:625-682.

Bras, R.L. 1990. Hydrology: An Introduction to Hydrologic Science. Addison-Wesley, New York, NY. [Review of empirical infiltration formulas]

Bresler, E., D. Russo, and R.D. Miller. 1978. Rapid Estimate of Unsaturated Hydraulic Conductivity Functions. Soil Sci. Soc. Am. J. 42:170-172.

Bridge, B.J. and P.J. Ross. 1985. A Portable Microcomputer Controlled Drip Infiltrometer: Field Measurement of Sorptivity, Hydraulic Conductivity, and Time for Ponding. Aust. J. Soil Research 23:393-404.

Broadbridge, P. and I. White. 1988. Constant Rate Rainfall Infiltration: A Versatile Nonlinear Model: I. Analytic Solution. Water Resources Research 244:145-154.

Brooks, R.H. and A.T. Corey. 1964. Hydraulic Properties of Porous Media. Hydrology Paper 3, Colorado State University, Fort Collins, CO, 27 pp.

Brooks, R.H. and A.T. Corey. 1966. Properties of Porous Media Affecting Fluid Flow. J. Irr. Drain. Div. ASCE 92:(IR2):61-88.

Brown, K.W. 1988. Review and Evaluation of the Influence of Chemicals on the Conductivity of Soil Clays. EPA/600/2-88/016 (NTIS PB88-170808).

Bruce, R.R. 1972. Hydraulic Conductivity Evaluation of the Soil Profile from Soil Water Retention Relations. Soil Sci. Soc. Am. Proc. 36:555-561.

Brust, K.J., C.H.M. van Bavel, and G.B. Stirk. 1968. Hydraulic Properties of a Clay Loam Soil and the Field Measurement of Water Uptake by Roots: III. Comparison of Field and Laboratory Data on Retention and of Measured and Calculated Conductivities. Soil Sci. Soc. Am. Proc. 32:322-326. [Double tube method]

Brutsaert, W. 1967. Some Methods of Calculating Unsaturated Permeability. Trans. Am. Soc. Agric. Eng. 10:400-404.

Burdine, N.T. 1953. Relative Permeability Calculation Size from Distribution Data. Trans. Petrol. Div., Am. Inst. Min. Metal. Eng. 198:71-78.

Bureau of Reclamation. 1978. Drainage Manual, 1st edition. U.S. Department of the Interior, Bureau of Reclamation, Denver, CO. [Cylinder infiltrometers]

Bureau of Reclamation. 1981. Ground-Water Manual--A Water Resources Technical Publication, 2nd edition. U.S. Department of the Interior, Bureau of Reclamation, Denver, CO.

Burgy, R.H. and J.N. Luthin. 1956. A Test of the Single and Double Ring Types of Infiltrometers. Trans. Am. Geophys. Union 37:189-191.

Byrne, G.F. 1971. An Improved Soil Water Flux Sensor. Agric. Meteorol. 9:101-104.

Byrne, G.F., J.E. Drummond, and C.W. Rose. 1967. A Sensor for Water Flux in Soil. "Point Source" Instrument. Water Resources Research 3:1073-1078.

Byrne, G.F., J.E. Drummond, and C.W. Rose. 1968. A Sensor for Water Flux in Soil: 2. "Line Source" Instrument. Water Resources Research 4:607-611.

Campbell, G.S. 1974. A Simple Method for Determining Unsaturated Conductivity from Moisture Retention Data. Soil Science 117:311-314.

Carvallo, H.O., D.K. Cassel., J. Hammond, and A. Bauer. 1976. Spatial Variability of In Situ Unsaturated Hydraulic Conductivity of Maddock Sandy Loam. Soil Science 121:1-8. [Instantaneous profile with tensiometers/soil cores]

Cary, J.W. 1968. An Instrument for Measurements of Soil Moisture Flow and Suction. Soil Sci. Soc. Am. Proc. 32:3-5.

Cary, J.W. 1970. Measuring Unsaturated Soil Moisture Flow with a Meter. Soil Sci. Soc. Am. Proc. 34:24-27.

Cary, J.W. 1971. Calibration of Soil Heat and Water Flux Meters. Soil Science 111:399-400.

Cary, J.W. 1973. Soil Water Flowmeters with Thermocouple Outputs. Soil Sci. Soc. Am. Proc. 37:176-181.

Cassell, D.K. 1971. Water and Solute Movement in Svea Loam for Two Water Management Regimes. Soil Sci. Soc. Am. Proc. 35:859-966.

Cassell, K.D. 1974. In Situ Unsaturated Hydraulic Conductivity for Selected North Dakota Soils. North Dakota, Agric. Exp. Stn. Bull. 494. [Instantaneous profile]

Chahal, R.S. 1964. Effect of Temperature and Trapped Air on the Energy Status of Water in Porous Media. Soil Science 98:107-112.

Chan, H.T. 1976. Effect of Hole Size on Percolation Rate in a Field Percolation Test. Publ. No. S60, Pollution Control Branch, Ministries of the Environment, Toronto.

Cheng, J.D., T.A. Black, and R.P. Willington. 1975. A Technique for the Field Determination of the Hydraulic Conductivity of Forest Soils. Can. J. Soil Sci. 55:79-82. [Instantaneous profile]

Childs, E.C. 1967. Soil Moisture Theory. Adv. Hydroscience 4:73-117.

Childs, E.C. and G.N. Collis-George. 1950. The Permeability of Porous Materials. Royal Soc. London, Proc. A 201:392-405.

Chong, S.-K. 1983. Calculation of Sorptivity From Constant Rate Rainfall Infiltration Measurements. Soil Sci. Soc. Am. J. 47:627-630.

Chong, S.K. and R.E. Green. 1983. Sorptivity Measurement and Its Application. In: Proc. Nat. Conf. Adv. Infiltration (Chicago), Am. Soc. Agric. Eng., Publ. 11-83, St. Joseph, MI, pp. 82-91. [Tension infiltrometer]

Chong, S.K., R.E. Green, and L.R. Ahuja. 1981. Simple In Situ Determinations of Hydraulic Conductivity by Power Function Descriptions of Drainage. Water Resources Research 17:1109-1114. [Draining profile]

Clapp, R.B. and G.M. Hornberger. 1978. Empirical Equations for Some Soil Hydraulic Properties. Water Resources Research 14:601-604.

Clausnitzer, V., J.W. Hopmans, and D.R. Nielsen. 1992. Simultaneous Scaling of Soil Water Retention and Hydraulic Conductivity Curves. Water Resources Research 28(1):19-31.

Clothier, B.E. and K.R.J. Smettem. 1990. Combining Laboratory and Field Measurements to Define the Hydraulic Properties of Soil. Soil Sci. Soc. Am. J. 54:299-304. [Tension infiltrometer]

Clothier, B.E. and I. White. 1981. Measurements of Sorptivity and Soil Water Diffusivity in the Field. Soil Sci. Soc. Am. J. 45:241-245. [Tension infiltrometer]

Clothier, B.E., I. White, and G.J. Hamilton. 1981a. Constant-Rate Rainfall Infiltration: Field Experiments. Soil Sci. Soc. Am. J. 45:245-249. [Tension infiltrometer, sprinkler infiltrometer]

Clothier, B.E., J.H. Knight, and I. White. 1981b. Burgers' Equation: Application to Field Constant-Flux Infiltration. Soil Science 132:215-261.

Constantz, J. 1982. Temperature Dependence of Unsaturated Hydraulic Conductivity of Two Soils. Soil Sci. Soc. Am. J. 46:466-470.

Cook, F.J. 1991. Calculation of Hydraulic Conductivity from Suction Permeameter Measurements. Soil Science 152:321-325. [Tension infiltrometer]

Corey, A.T. 1957. Measurement of Water and Air Permeability in Unsaturated Soil. Soil Sci. Soc. Am. Proc. 11:93-99.

Dane, J.H. 1980. Comparison of Field and Laboratory Determined Hydraulic Conductivity Values. Soil Sci. Soc. Am. J. 44:228-231. [Instantaneous profile, draining profile]

Dane, J.H. and S. Hruska. 1983. In Situ Determination of Soil Hydraulic Properties During Drainage. Soil Sci. Soc. Am. J. 47:619-624.

Daniel, D.E. 1984. Predicting Hydraulic Conductivity of Clay Liners. J. Geotech. Eng. 110(2):285-300.

Daniel, D.E. 1989. In Situ Hydraulic Conductivity Tests for Compacted Clay. J. Geotech. Eng. (ASCE) 115:1205-1226.

Daniel, D.E. and S.J. Trautwein. 1986. Field Permeability Test for Earthen Liners. In: Use of In-Situ Tests in Geotechnical Engineering, S.P. Clemence (ed.), American Society of Civil Engineers, New York, NY, pp. 146-160.

Davidson, J.M., L.R. Stone, D.R. Nielsen, and M.E. LaRue. 1969. Field Measurement and Use of Soil Water Properties. Water Resources Research 5:1312-1321. [Instantaneous profile]

de Jong, R. 1982. Assessment of Empirical Parameters that Describe Soil Water Characteristics. Can. Agric. Eng. 24:65-70.

Dirksen, C. 1972. A Versatile Soil Water Flux Meter. In: Proc. 2nd Symp on Fundamentals of Transport Phenomena in Porous Media, Vol. 2, IAHR, ISSS, Guelph, Ontario, pp. 425-442.

Dirksen, C. 1974. Field Test of Soil Water Flux Meters. Trans. Am. Soc. Agric. Eng. 17:1038-1042.

Dirksen, C. 1975. Determination of Soil Water Diffusivity by Sorptivity Measurements. Soil Sci. Soc. Am. Proc. 39:22-27. [Early tension infiltrometer]

Dirksen, C. 1991. Unsaturated Hydraulic Conductivity. In: Soil Analysis: Physical Methods, K.A. Smith and C.E. Mullins (eds.), Marcel Dekker, New York, NY, pp. 209-269. [Sprinkler/dripper, crust, instantaneous profile, draining profile methods]

Dixon, R.M. 1975. Design and Use of Closed-Top Infiltrometers. Soil Sci. Soc. Am. Proc. 39:755-763.

Dixon, R.M. and D.R. Linden. 1972. Soil Air Pressure and Water Infiltration Under Border Irrigation. Soil Sci. Soc. Am. Proc. 36:948-953.

Dreiss, S.S. and L.D. Anderson. 1985. Estimating Vertical Soil Moisture Flow at a Land Treatment Site. Ground Water 23:503-511.

Dunne, T. and L.B. Leopold. 1978. Water in Environmental Planning. W.H. Freeman, San Francisco, CA, 818 pp.

Elrick, D.E. and W.D. Reynolds. 1986. An Analysis of the Percolation Tests Based on Three Dimensional Saturated-Unsaturated Flow from a Cylindrical Test Hole. Soil Science 142:308-321.

Elrick, D.E. and W.D. Reynolds. 1992. Methods for Analyzing Constant-Head Well Permeameter Data. Soil Sci. Soc. Am. J. 56:320-323. (See also, 1993 discussion by A. Amoozegar and reply by D.E. Elrick and W.D. Reynolds 57:559-563.)

Elrick, D.E., W.D. Reynolds, N. Baumgartner, K.A. Tan, and K.L. Bradshaw. 1987. In Situ Measurements of Hydraulic Properties of Soils Using the Guelph Permeameter and the Guelph Infiltrometer. In: Proc. 3rd Int. Workshop on Land Drainage, Dept. of Agric. Eng., Ohio State Univ., Columbus, OH, pp.13-23. [Tension infiltrometer]

Elrick, D.E., W.D. Reynolds, and K.A. Tan. 1988. A New Analysis for the Constant Head Well Permeameter Technique. In: Proc. Int. Conf. and Workshop on the Validation of Flow and Transport Models for the Unsaturated Zone (Ruidoso, NM), P.J. Wierenga and D. Bachelet (eds.), New Mexico State University, Las Cruces, NM, pp. 88-95.

Elsbury, B.R., G.A. Sraders, D.C. Anderson, J.A. Rehage, and J.O. Sai. 1988. Field and Laboratory Testing of a Compacted Soil Liner. EPA/600/2-88/067 (NTIS PB89-125942), 156 pp. [Cylinder infiltrometers]

Enfield, C.G., J.J.C. Hsieh, and A.W. Warrick. 1973. Evaluation of Water Flux above a Deep Water Table Using Thermocouple Psychrometers. Soil Sci. Soc. Am. Proc. 37:968-970.

Evans, D.D., T.W. Sammis, and A.W. Warrick. 1976. Transient Movement of Water and Solutes in Unsaturated Soils Systems. Phase II Project Completion Report, OWRT Project No. B040-ARIZ, Dept. of Hydrology and Water Resources, University of Arizona, Tucson. [Temperature and tritium tracers]

Everett, L.G., L.G. Wilson, and L.G. McMillion. 1982. Vadose Zone Monitoring Concepts for Hazardous Waste Sites. Ground Water 29(3):312-324.

Everett, L.G., L.G. Wilson, and E.W. Hoylman. 1983. Vadose Zone Monitoring for Hazardous Waste Sites. EPA/600/X-83/064 (NTIS PB84-212752). (Also published in 1984 by Noyes Data Corporation, Park Ridge, NJ.)

Fenn, D.C., K.J. Hanley, and T.V. DeGeare. 1975. Use of the Water Balance Method for Predicting Leachate Generation from Solid Waste Disposal Sites. EPA/530/SW-168 (NTIS PB87-194643), 39 pp. [Thornthwaite water balance]

Flühler, H., M.S. Arkadkani, and L.H. Stolzy. 1976. Error Propagation in Determining Hydraulic Conductivities from Successive Water Content and Pressure Head Profiles. Soil Sci. Soc. Am. J. 40:830-836. [Instantaneous profile]

Forslund, B.L. and D.A. Daily. 1990. Artificial Recharge of Stormwater Runoff From a Shopping Center. Ground Water Management 1:653-667 (Proc. of the 1990 Cluster of Conferences: Ground Water Management and Wellhead Protection). [Thornthwaite water balance]

Freeze, R.A. and J.A. Cherry. 1979. Groundwater. Prentice-Hall, Englewood, NJ, 604 pp.

Frissel, M.J., P. Poelstra, K. Marsen, and G.H. Bolt. 1974. Tracing Soil-Moisture Migration with ^{36}Cl, ^{60}Co, and Tritium. In: Isotopes and Radiation Techniques in Soil Physics and Irrigation Studies. International Atomic Energy Agency, Vienna.

Fritton, D.D., T.T. Ratvasky, and G.W. Petersen. 1986. Determination of Saturated Hydraulic Conductivity form Soil Percolation Test Results. Soil Sci. Soc. Am. J. 50:273-276.

Gardner, W.R. 1958. Some Steady State Solutions of the Unsaturated Moisture Flow Equation with Application to Evaporation from a Water Table. Soil Science 85:228-232.

Gee, G.W. and D. Hillel. 1988. Groundwater Recharge in Arid Regions: Review and Critique of Estimation Methods. Hydrol. Process. 2:255-266. [Conventional water balance methods likely to yield large errors]

Giakoumakis, S.G. and G.P. Tsakiris. 1991. Eliminating the Effect of Temperature from Unsaturated Soil Hydraulic Functions. J. Hydrology 129:109-125.

Green, W.H. and C.A. Ampt. 1911. Studies on Soil Physics, I: Flow of Air and Water Through Soils. J. Agric. Sci. 4:1-24.

Green, R.E. and J.C. Corey. 1971. Calculations of Hydraulic Conductivity: A Further Evaluation of Some Predictive Methods. Soil Sci. Soc. Am. Proc. 35:3-8.

Green, R.E., L.R. Ahuja, and S.K. Chong. 1986. Hydraulic Conductivity, Diffusivity, and Sorptivity of Unsaturated Soils: Field Methods. In: Methods of Soil Analysis, Part 1, 2nd edition, A. Klute (ed.), Agronomy Monograph No. 9, American Society of Agronomy, Madison, WI, pp. 771-798.

Grierson, I.T. and J.M. Oades. 1977. A Rainfall Simulation for Field Studies in Run-off and Soil Erosion. J. Agric. Eng. Res. 22:37-44.

Haise, H.R., et al. 1956. The Use of Cylinder Infiltrometers to Determine the Intake Characteristics of Irrigated Soils. ARS Publ. No. 41-7, U.S. Dept. Agric., Agricultural Research Service, Washington, DC.

Hamilton, J.M., D.E. Daniel, and R.E. Olson. 1981. Measurement of Hydraulic Conductivity of Partially Saturated Soils. In: Permeability and Groundwater Contaminant Transport, T.F. Zimmie and C.O. Riggs (eds.), ASTM STP 746, American Society for Testing and Materials, Philadelphia, PA, pp. 182-196.

Hamon, W.R. 1979. Infiltrometer Using Simulated Rainfall for Infiltration Research. In: Infiltration Research Planning Workshop, Part I, State of the Art Reports. ARM-NC-4, U.S. Dept. of Agriculture.

Hanks, R.J. and S.A. Bowers. 1962. Numerical Solution of the Moisture Flow Equation for Infiltration into Layered Soils. Soil Sci. Soc. Am. Proc. 26:530-534.

Hanks, R.J., A. Klute, and E. Bresler. 1969. A Numeric Method for Estimating Infiltration, Redistribution, Drainage and Evaporation of Water from Soil. Water Resources Research 5:1064-1068.

Haridasan, M. and R.D. Jensen. 1972. Effect of Temperature on Pressure Head-Water Content Relationship and Conductivity of Two Soils. Soil Sci. Soc. Am. Proc. 36:703-708.

Havlena, J.A. and D.B. Stephens. 1992. Vadose Zone Characterization Using Field Permeameters and Instrumentation. In: Current Practices in Ground Water and Vadose Zone Investigations, ASTM STP 1118, D.M. Nielsen and M.N. Sara (eds.), American Society for Testing and Materials, Philadelphia, PA, pp. 93-110. [Air-entry permeameter, air and gas permeameters, constant head borehole, Guelph permeameter, tension infiltrometer, sealed double-ring infiltrometer]

Healy, K.H. and R. Laak. 1973. Factors Affecting the Percolation Test. J. Water Pollut. Control Fed. 45:1508-1516.

Heinen, M. and P.A.C. Raats. 1990. Evaluation of Two Models Describing the Steady Discharge for a Constant Head Well Permeameter into Unsaturated Soil. Soil Science 150:401-412. [Constant head borehole infiltration, Guelph permeameter]

Hendrickx, J.M.H. 1990. Determination of Hydraulic Soil Properties. In: Process Studies in Hillslope Hydrology, M.G. Anderson and T.P. Burt (eds.), John Wiley & Sons, New York, NY, pp. 43-92. [Saturated: double tube, cylinder permeameter, constant head borehole infiltration, Guelph permeameter, air entry permeameter; unsaturated: crust, sprinkler, instantaneous profile, draining profile, sorptivity (tension infiltrometer), parameter estimation]

Hill, D.E. 1966. Percolation Testing for Septic Tank Drainage. Bulletin 678, Conn. Agric. Exp. Sta., Storrs, CT.

Hillel, D.I., and Y. Benyamini. 1974. Experimental Comparison of Infiltration and Drainage Methods for Determining Unsaturated Hydraulic Conductivity of a Soil Profile In Situ. In: Isotope and Radiation Techniques in Soil Physics and Irrigation Studies 1973, International Atomic Energy Agency, Vienna, pp. 271-275. [Instantaneous profile, sprinkler-imposed flux]

Hillel, D.I. and W.R. Gardner. 1969. Steady Infiltration into Crust-Topped Profiles. Soil Science 107:137-142.

Hillel, D.I. and W.R. Gardner. 1970. Measurement of Unsaturated Conductivity and Diffusivity by Infiltration through an Impeding Layer. Soil Science 109:149-153. [Crust test]

Hillel, D.I., V.D. Krentos, and Y. Stylianon. 1972. Procedure and Test of an Internal Drainage Method for Measuring Soil Hydraulic Conductivity Characteristics in Situ. Soil Science 114:395-400. [Instantaneous profile]

Hills, R.C. 1971. Lateral Flow Under Cylinder Infiltrometers: A Graphical Correction Procedure. J. Hydrology 13:153-162.

Hills, R.G., D.B. Hudson, I. Porro, and P.J. Wierenga. 1989. Modeling One-Dimensional Infiltration into Very Dry Soils: 2. Estimation of the Soil Water Parameters and Model Predictions. Water Resources Research 25:1271-1282. [Sprinkler method]

Hogarth, W.L., J.-Y. Parlange, R., R. Haverkamp, B. Davidoff, and H.M. Selim. 1989. Application of an Infiltration Model to Experimental Data. Soil Sci. Soc. Am. J. 53:1913-1914.

Hopmans, J.W. and J.H. Dane. 1986. Temperature Dependence of Soil Hydraulic Properties. Soil Sci. Soc. Am. J. 50:4-9.

Hornung, U. 1983. Identification of Nonlinear Soil Physical Parameters form an Input-Output Experiment. In: Workshop on Numerical Treatments of Inverse Problems in Differential and Integral Equations, P. Deuflhard and E. Hairer (eds.), Birkhäuser, Boston, MA, pp. 227-237.

Horton, R.E. 1935. Surface Runoff Phenomena: Part 1, Analysis of the Hydrograph. Horton Hydrology Laboratory Pub. 101, Ann Arbor, MI. [Empirical infiltration equation]

Horton, R.E. 1939. Analysis of Runoff Plot Experiments with Varying Infiltration Capacity. Trans. Am. Geophys. Union IV:693-711.

Horton, R.E. 1940. An Approach Toward a Physical Interpretation of Infiltration Capacity. Soil Sci. Soc. Am. Proc. 5:399-417.

Hsieh, J.J.C. and C.G. Enfield. 1974. Steady-State Method of Measuring Unsaturated Hydraulic Conductivity. Commun. in Soil Sci. and Plant Analysis 5(2):123-129.

Huggins, L.F. and E.J. Monke. 1966. The Mathematical Simulation of Hydrology of Small Watershed. Purdue University Water Resource Center Tech. Rept. No. 1, Lafayette, IN. [Empirical infiltration-soil moisture relationship]

Irmay, S. 1954. On the Hydraulic Conductivity of Unsaturated Soils. Trans. Am. Geophys. Union 35:463-467.

Jabro, J.D. and D.D. Fritton. 1990. Simulation of Water Flow from a Percolation Test Hole in a Layered Soil. Soil Sci. Soc. Am. J. 54:1214-1218. [Guelph permeameter]

Jackson, R.D. 1972. On the Calculation of Hydraulic Conductivity. Soil Sci. Soc. Am. Proc. 36:380-382.

Jackson, R.D., R.J. Reginato, and C.H.M. van Bavel. 1965. Comparison of Measured and Calculated Hydraulic Conductivities of Unsaturated Soils. Water Resources Research 1:375-380.

Jager, A. and W.J.M. van der Voort. 1966. Collection and Preservation of Monoliths from Sandy Soils and Ripened Clay Soils Above and Below the Water Table. Soil Survey Paper No. 2, Netherlands Soil Survey Institute, Wageningen.

Jarrett, A.R. and D.D. Fritton. 1978. Effect of Entrapped Air on Infiltration. Trans. Am. Soc. Agric. Eng. 21:901-906.

Jarvis, N.J., P.B. Leeds-Harrison, and J.M. Dosser. 1984. The Use of Tension Infiltrometers to Assess Routes and Rates of Infiltration in a Clay Soil. J. Soil Science 38:633-640.

Jensen, M.E. (ed.). 1974. Consumptive Use of Water and Irrigation Requirements: A Report Prepared by the Technical Committee on Irrigation Water Requirements. American Society of Civil Engineers, New York, NY, 215 pp. [Water budget flux estimation]

Johnson, A.I. 1963. A Field Method for Measurement of Infiltration. U.S. Geological Survey Water-Supply Paper 1544-F, 27 pp. [Cylinder infiltrometer]

Johnston, C.D. 1987. Distribution of Environmental Chloride in Relation to Subsurface Hydrology. J. Hydrology 94:67-88.

Jury, W.A. and G. Sposito. 1985. Field Calibration and Validation of Solute Transport Models for the Unsaturated Zone. Soil Sci. Soc. Am. J. 49:1331-1341.

Kanwar, R.S., H.A. Rizvi, M. Ahmed, R. Horton, Jr. and S.J. Marley. 1987. A Comparison of Two Method for Rapid Measurement of Saturated Hydraulic Conductivity of Soils. In: Proc. 3rd Int. Workshop on Land Drainage, Ohio State University, Dept. Agric. Eng., Columbus, OH, pp. G35-G53. [Constant-head borehole infiltration, falling head permeameter]

Kessler, J. and R.J. Oosterbaan. 1974. Determining Hydraulic Conductivity of Soils. In: Drainage Principles and Applications, International Institute for Land Reclamation and Improvement/ILRI Pub. 16, Wageningen, Vol. III, Chapter 24, pp. 254-296. (Revised chapter for new edition of ILRI Pub. 16 in preparation by R.J. Oosterbaan and H.J. Nijland.) [Double tube, infiltrometer, inverse auger hole methods]

Klute, A. 1972. The Determination of the Hydraulic Conductivity and Diffusivity of Unsaturated Soils. Soil Science 113:264-276.

Klute, A. and C. Dirksen. 1986. Hydraulic Conductivity and Diffusivity: Laboratory Methods. In: Methods of Soil Analysis, Part 1, 2nd edition, A. Klute (edition), Agronomy Monograph No. 9, American Society of Agronomy, Madison, WI, pp. 687-734.

Kmet, P. 1982. EPA's 1975 Water Balance Method--Its Use and Limitations. Wisconsin Department of Natural Resource Guidance Report, Madison, WI. [Thornthwaite water balance]

Knowlton, Jr., R.G., A.M. Parsons, and K.N. Gaither. 1992. Techniques for Quantifying the Recharge Rate through Unsaturated Soils. In: Current Practices in Ground Water and Vadose Zone Investigations, ASTM STP 1118, D.M. Nielsen and M.N. Sara (eds.), American Society for Testing and Materials, Philadelphia, PA, pp. 111-123. [Tracers: stable isotope (deuterium, oxygen-18), chloride mass balance, tritium and Cl-36]

Knight, J.H. 1983. Infiltration Functions for Exact and Approximate Solutions of Richards' Equation. In: Proc. Nat. Conf. Advances in Infiltration (Chicago), Am. Soc. Agric. Eng., St. Joseph, MI, pp. 24-33.

Knight, J.H. and J.R. Philip. 1974. On Solving the Unsaturated Flow Equation: 2. Critique of Parlange's Method. Soil Science 407-416.

Kool, J.B. and J.C. Parker. 1988. Analysis of the Inverse Problem for Transient Unsaturated Flow. Water Resources Research 24:817-830. [Parameter identification]

Kool, J.B., J.C. Parker, and M.Th. Van Genuchten. 1985. Determining Soil Hydraulic Properties from One-Step Outflow Experiments by Parameter Estimation: I. Theory and Numerical Studies. Soil Sci. Soc. Am. J. 49:1348-1354.

Kool, J.B., J.C. Parker, and M.Th. Van Genuchten. 1987. Parameter Estimation for Unsaturated Flow and Transport Models--A Review. J. Hydrology 91:255-293.

Kraatz, D.B. 1977. Irrigation Canal Lining. FAO Land and Water Development Series No. 1. United Nations Food and Agriculture Organization, Rome. [Seepage meters]

Kunze, R.J., G. Uehara, and K. Graham. 1968. Factors Important in the Calculation of Hydraulic Conductivity. Soil Sci. Soc. Am. Proc. 32:760-765.

Kutilek, M. 1980. Constant-Rainfall Infiltration. J. Hydrology 45:289-303.

Laliberte, G.E. and A.T. Corey. 1967. Hydraulic Properties of Disturbed and Undisturbed Soils. In: Permeability and Capillarity of Soils, ASTM STP 417, American Society for Testing and Materials, Philadelphia, PA, pp. 56-71.

Laliberte, G.E., A.T. Corey, and R.H. Brooks. 1966. Properties of Unsaturated Porous Media. Hydrology Paper No. 17, Colorado State University, Fort Collins, CO.

Lambe, T.W. 1955. The Permeability of Fine-Grained Soils. ASTM STP 163, American Society for Testing and Materials, Philadelphia, PA, pp. 56-67.

LaRue, M.E., D.R. Nielsen, and R.M. Hagan. 1968. Soil Water Flux Below a Rye-Grass Root Zone. Agronomy J. 60:625-629. [Hydraulic-gradient, draining profile]

Lee, D.M., W.D. Reynolds, D.E. Elrick, and B.E. Clothier. 1985. A Comparison of Three Techniques for Measuring Saturated Hydraulic Conductivity. Can. J. Soil Sci. 65(3):563-573. [Guelph permeameter, air entry permeameter, soil core]

Libardi, P.L., K. Reichardt, D.R. Nielsen, and J.W. Biggar. 1980. Simple Field Methods for Estimating Soil Hydraulic Conductivity. Soil Sci. Soc. Am. J. 44:3-7.

Logsdon, S.D., R.R. Allmaras, L. Wu, J.B. Swan, and G.W. Randall. 1990. Macroporosity and Its Relation to Saturated Hydraulic Conductivity under Different Tillage Practices. Soil Sci. Soc. Am. J. 54-1096-1101. [Guelph permeameter]

Luxmoore, R.J., T. Grizzard, and M.R. Patterson. 1981. Hydraulic Properties of Fullerton Cherty Silt Loam. Soil Sci. Soc. Am. J. 45:692-698. [Instantaneous profile, draining profile]

Marshall, T.J. 1958. The Relation between Permeability and Size Distribution of Pores. J. Soil Science 9:1-8.

Mason, D.D., J.F. Lutz, and R.G. Petersen. 1957. Hydraulic Conductivity as Related to Certain Soil Properties in a Number of Great Soil Groups--Sample Errors Involved. Soil Sci. Soc. Am. Proc. 21:554-561.

Mather, J.R. and D.A. Rodriguez. 1978. The Use of the Water Budget in Evaluating Leaching through Solid Waste Landfills. Water Resources Center Contribution No. 25, University of Delaware, Newark, DE. [Thornthwaite water balance]

McCuen, R.H., W.J. Rawls, and D.L. Brakensiek. 1981. Statistical Analysis of the Brooks-Corey and the Green Ampt Parameters Across Soil Textures. Water Resources Research 17:1005-1013.

McQueen, I.S. 1963. Development of a Hand Portable Rainfall-Simulator Infiltrometer. U.S. Geological Survey Circular 482, 16 pp.

McWhorter, D.B., A.T. Corey, and K.M. Adam. 1973. The Elimination of Trapped Gas from Porous Media by Diffusion. Soil Science 116:18-25.

Mehuys, G.R., L.H. Stolzy, J. Letzy, and L.V. Weeks. 1975. Effect of Stones on the Hydraulic Conductivity of Relatively Dry Desert Soils. Soil Sci. Soc. Am. Proc. 39:47-42.

Mellon, W.L. 1973. Septic Systems: Effect of Surface and Subsurface Water. J. Soil and Water Conservation 28(5):221-223. [Percolation test]

Messing, I. 1989. Estimation of the Saturated Hydraulic Conductivity in Clay Soils from Soil Moisture Retention Data. Soil Sci. Soc. Am. J. 53:665-668.

Mielke, L.N. 1973. Encasing Undisturbed Soil Cores in Plastic. Soil Sci. Soc. Am. Proc. 37:325-326.

Miller, R.J., J.W. Biggar, and D.R. Nielsen. 1965. Chloride Displacement in Panoche Clay Loam in Relation to Water Movement and Distribution. Water Resources Research 1:63-73.

Millington, R.J. and J.P. Quirk. 1959. Permeability of Porous Media. Nature 183:387-389.

Millington, R.J. and J.P. Quirk. 1961. Permeability of Porous Solids. Trans Faraday Society 57:1200-1206.

Millington, R.J. and J.P. Quirk. 1964. Formation Factor and Permeability Equations. Nature 202:143-145.

Mishra, S., J.C. Parker, and N. Singhal. 1989. Estimation of Soil Hydraulic Properties and Their Uncertainty from Particle Size Distribution Data. J. Hydrology 108:1-18.

Morin, J., D. Goldberg, and I. Seginer. 1967. A Rainfall Simulator with a Rotating Disk. Trans. Am. Soc. Agric. Eng. 10:74-77.

Mualem, Y. 1976a. A New Model for Predicting the Hydraulic Conductivity of Unsaturated Porous Media. Water Resources Research 12(3):513-522.

Mualem, Y. 1976b. A Catalog of the Hydraulic Properties of Unsaturated Soils. Research Project 442, Technicon, Israel Institute of Technology, Haifa, 100 pp.

Mualem, Y. 1978. Hydraulic Conductivity of Unsaturated Porous Media: Generalized Macroscopic Approach. Water Resources Research 14:325-334.

Mualem, Y. 1986. Hydraulic Conductivity of Unsaturated Soils: Prediction and Formulas. In: Methods of Soil Analysis, Part 1, 2nd edition, A. Klute (ed.), Agronomy Monograph No. 9, American Society of Agronomy, Madison, WI, pp. 799-823.

Mualem, Y. and G. Dagan. 1978. Hydraulic Conductivity of Soils: Unified Approach to the Statistical Models. Soil Sci. Soc. Am. J. 42:393-395.

Musgrave, G.W. and H.N. Holtan. 1964. Infiltration. In: Handbook of Applied Hydrology, V.T. Chow (ed.), McGraw-Hill, New York, NY, Section 12.

Nagpal, N.K. and J. DeVries. 1976. An Evaluation of the Instantaneous Profile Method for In Situ Determination of Hydrologic Properties of Layered Soil. Can. J. Soil Science 56:453-461.

Nielsen, D.R. and J.W. Biggar. 1973. Analyzing Soil Water and Solute Movement under Field Conditions. In: Soil Moisture and Irrigation Studies II, International Atomic Energy Agency, Vienna.

Nielsen, D.R., D. Kirkham, and E.R. Perrier. 1960. Soil Capillary Conductivity: Comparison of Measured and Calculated Values. Soil Sci. Soc. Am. Proc. 24:157-160.

Nielsen, D.R., J.M. Davidson, J.W. Biggar, and R.J. Miller. 1964. Water Movement through Panoche Clay Loam Soil. Hilgardia 35:491-506. [Instantaneous profile]

Nielsen, D.R., J.W. Biggar, and K.T. Erh. 1973. Spatial Variability of Field-Measured Soil Water Properties. Hilgardia 42:215-259. [Instantaneous profile]

Ogata, G., and L.A. Richards. 1957. Water Content Changes Following Irrigation of Bare Field Soils that Is Protected from Evaporation. Soil Sci. Soc. Am. Proc. 21:355-356. [Instantaneous profile]

Orr, B.D., T.H. Chestnut, and G.W. Smolley. 1990. Water Balance in the Interior Uplands: A Standard Hydrologic Tool Provide Easily Interpreted Information about Soil Moisture and Site Productivity. In: Proc. 6th Biennial Southern Silvicultural Research Conf., SE-GTR-70, Southeastern Forest Exp. Sta., Asheville, NC, Vol. 1, pp. 485-495. [Thornthwaite water balance]

Paige, G.B. and P.L.M. Veneman. 1993. Percolation Tests and Hydraulic Conductivity. Soil Survey Horizons 34(1):1-3.

Panikar, J.T. and G. Nanjappa. 1977. Suction Head at Wet Front in Unsaturated Flow Problems--A New Definition. J. Hydrology 33:1-14.

Panno, S.V., B.L. Herzog, K. Cartwright, K.R. Rehfeldt, I.G. Krapac, and B.R. Hensel. 1991. Field-Scale Investigation of Infiltration into a Compacted Soil Liner. Ground Water 29:915-921.

Parker, J.C., J.B. Kool, and M. Th. Van Genuchten. 1985. Determining Soil Hydraulic Properties from One-Step Outflow Experiments by Parameter Estimation: II. Experimental Studies. Soil Sci. Soc. Am. J. 49:1354-1359.

Parlange, J.-Y. 1972. Theory of Water Movement in Soils: 8. One-Dimensional Infiltration with Constant Flux at the Surface. Soil Science 114:1-4.

Parlange, J.-Y. and R.E. Smith. 1976. Ponding Time for Variable Rainfall Rates. Can. J. Soil Sci. 56:121-123.

Parlange, J.-Y., I. Lisle, R.D. Braddock, and R.E. Smith. 1982. The Three-Parameter Infiltration Equation. Soil Science 133:337-341.

Parlange, J.-Y., R. Haverkamp, and J. Touma. 1985. Infiltration Under Ponded Conditions: 1. Optimal Analytical Solution and Comparison with Experimental Observations. Soil Science 139:305-311.

Parr, J.F. and A.R. Bertrand. 1960. Water Infiltration into Soils. Advances in Agronomy 12:311-363. [Sprinkler and cylinder infiltrometers, basin and watershed methods]

Peck, A.J. 1965. Moisture Profile Development and Air Compression during Water Uptake by Bounded Porous Bodies. Soil Science 100:49-51.

Peck, A.J. 1969. Entrapment, Stability and Resistance of Air Bubbles in Soil Water. Aust. J. Soil Res. 7:79-90.

Pederson, T.A., J. Gallagher, and J. Vitale. 1988. Comparison of Sealed Double Ring Infiltrometer and Laboratory Derived Permeability Values for Closure of a Superfund Landfill. In: Superfund '88, Hazardous Waste Control and Research Institute, Silver Spring, MD, pp. 199-201.

Perroux, K.M. and I. White. 1988. Designs for Disc Permeameters. Soil Sci. Soc. Am. J. 52:1205-1215.

Peterson, A.E. and G.D. Bubenzer. 1986. In: Methods of Soil Analysis, Part 1, 2nd edition, A. Klute (ed.), Agronomy Monograph No. 9, American Society of Agronomy, Madison, WI, pp. 845-870.

Philip, J.R. 1954. An Infiltration Equation with Physical Significance. Soil Science 77:153-157.

Philip, J.R. 1957a. The Theory of Infiltration: 1. The Infiltration Equation and Its Solution. J. Soil Science 83:345-357.

Philip, J.R. 1957b. The Theory of Infiltration: 4. Sorptivity and Algebraic Infiltration Equations. Soil Science 84:257-264.

Philip, J.R. 1958a. The Theory of Infiltration: 6. Effect of Water Depth over Soil. Soil Science 85:278-286.

Philip, J.R. 1958b. The Theory of Infiltration: 7. Soil Science 85:333-357.

Philip, J.R. 1969. Theory of Infiltration. Advances in Hydroscience 5:215-296.

Philip, J.R. 1973. On Solving the Unsaturated Flow Equation: 1. The Flux-Concentration Relation. Soil Science 116:328-335.

Philip, J.R. 1975. Stability Analysis of Infiltration. Soil Sci. Soc. Am. Proc. 39:1042-1049.

Philip, J.R. 1983. Infiltration in One, Two and Three Dimensions. In: Proc. Nat. Conf. Advances in Infiltration (Chicago), Am. Soc. Agric. Eng., St. Joseph, MI, pp. 1-13.

Philip, J.R. 1985a. Approximate Analysis of the Bore Hole Permeameter in Unsaturated Soil. Water Resources Research 21:1025-1033.

Philip, J.R. 1985b. Reply to "Comments on Steady Infiltration from Spherical Cavities." Soil Sci. Soc. Am. J. 49:788-789.

Philip, J.R. 1989a. Multidimensional Steady Infiltration to a Water Table. Water Resources Research 25:109-116.

Philip, J.R. 1989b. The Scattering Analog for Infiltration in Porous Media. Rev. Geophysics 27:431-448.

Philip, J.R. and J.H. Knight. 1974. On Solving the Unsaturated Flow Equation: 3. New Quasi-Analytical Technique. Soil Science 117:1-13.

Phillips, F.M., J.L. Mattick, and T.A. Duval. 1988. Chlorine 36 and Tritium from Nuclear Weapons Fallout as Tracers for Long-Term Liquid Movement in Desert Soils. Water Resources Research 24:1877-1891.

Picornell, M. and A. Guerra. 1992. A Comparison of Field and Laboratory Measurements of Hydraulic Conductivity. In: Current Practices in Ground Water and Vadose Zone Investigations, ASTM STP 1118, D.M. Nielsen and M.N. Sara (eds.), American Society for Testing and Materials, Philadelphia, PA, pp. 346-361. [Borehole constant head infiltration]

Priksat, M.A., M.D. Ankeny, and T.C. Kaspar. 1992. Design for an Automated, Self-Regulating, Single-Ring Infiltrometer. Soil Sci. Soc. Am. J. 56:1409-1411.

Puckett, W.E., J.H. Dane, and B.F. Hajek. 1985. Physical and Mineralogical Data to Determine Soil Hydraulic Properties. Soil Sci. Soc. Am. J. 49:831-836. [Saturated hydraulic conductivity, soil moisture retention]

Pullan, A.J. 1990. The Quasilinear Approximation of Unsaturated Porous Media Flow. Water Resources Research 26:1219-1234.

Purcell, W.R. 1949. Capillary Pressures--Their Measurement Using Mercury and the Calculation of Permeability Therefrom. Pet. Trans. Am. Inst. Min., Metall. Pet. Eng. 186:39-48.

Raats, P.A.C. 1973. Unstable Wetting Fronts in Uniform and Nonuniform Soils. Soil Sci. Soc. Am. Proc. 37:681-685.

Raats, P.A.C. and W.R. Gardner. 1971. Comparison of Empirical Relationships Between Pressure Head and Hydraulic Conductivity and Some Observations on Radially Symmetric Flow. Water Resources Research 7:709-714.

Rankl, J.G. 1982. An Empirical Method for Determining Average Soil Infiltration Rates and Runoff, Powder River Structural Basin, Wyoming. U.S. Geological Survey Water-Resources Investigations Report 81-76, 38 pp.

Rankl, J.G. 1990. A Point-Infiltration Model for Estimating Runoff from Rainfall on Small Basins in Semiarid Areas of Wyoming. U.S. Geological Survey Water Supply Paper 2366, 28 pp.

Ravi, V. and A.A. Jennings. 1990. Penetration Model Parameter Estimation from Dynamic Permeability Measurements. Soil Sci. Soc. Am. J. 54:13-19.

Rawls, W.J. and D.L. Brakensiek. 1985. Prediction of Soil Water Properties for Hydrologic Modelling. In: Proc. ASCE Symp. on Watershed Management, American Society of Civil Engineers, New York, NY, pp. 293-299. [Soil water retention, average hydraulic conductivity curves for 10 texture classes]

Rawls, W.J., D.L. Brakensiek, and K.E. Saxton. 1982. Estimation of Soil Water Properties. Trans. Am. Soc. Agric. Eng. 25:1316-1320, 1328.

Rawtiz, E., M. Margolin, and D. Hillel. 1972. An Improved Variable Intensity Sprinkling Infiltrometer. Soil Sci. Soc. Am. Proc. 36:533-535.

Reichardt, K.D., D.R. Nielsen, and J.W. Biggar. 1972. Scaling of Horizontal Infiltration into Homogeneous Soils. Soil Sci. Soc. Am.

Proc. 36:241-245.

Reichardt, K., P.L. Libardi, and D.R. Nielsen. 1975. Unsaturated Hydraulic Conductivity Determination by a Scaling Technique. Soil Science 120:165-168.

Reinds, G.J. 1988. Comparison of Three Methods for Determination of Unsaturated Hydraulic Conductivity. Report No. 95, Netherlands Soil Survey Institute, Wageningen, 63 pp. [All laboratory methods including crust method, and modified crust method using a sprinkler]

Reynolds, W.D. and D.E. Elrick. 1985a. In Situ Measurement of Field-Saturated Hydraulic Conductivity, Sorptivity and the (alpha)-Parameter Using the Guelph Permeameter. Soil Science 140:292-302.

Reynolds, W.D. and D.W. Elrick. 1985b. Measurement of Field-Saturated Hydraulic Conductivity, Sorptivity and the Conductivity-Pressure Head Relationship Using the "Guelph-Permeameter." In: Proc. [2nd] NWWA Conf. on Characterization and Monitoring of the Vadose (Unsaturated) Zone, National Water Well Association, Worthington, OH, pp. 9-33.

Reynolds, W.D. and D.E. Elrick. 1986. A Method for Simultaneous In Situ Measurement in the Vadose Zone of Field Saturated Hydraulic Conductivity, Sorptivity and the Conductivity-Pressure Head Relationship. Ground Water Monitoring Review 6(4):84-95.

Reynolds, W.D. and D.E. Elrick. 1987. A Laboratory and Numerical Assessment of the Guelph Permeameter Method. Soil Science 144:282-299.

Reynolds, W.D. and D.E. Elrick. 1990. Ponded Infiltration from a Single Ring: I. Analysis of Steady Flow. Soil Sci. Soc. Am. J. 54:1233-1241.

Reynolds, W.D. and D.E. Elrick. 1991. Determination of Hydraulic Conductivity Using a Tension Infiltrometer. Soil Sci. Soc. Am. J. 55:633-639.

Reynolds, W.D., D.E. Elrick, and G.C. Topp. 1983. A Reexamination of the Constant Head Well Permeameter Methods for Measuring Saturated Hydraulic Conductivity Above the Water Table. Soil Science 136:250-268. [Constant head borehole infiltration, Guelph permeameter, air entry permeameter]

Reynolds, W.D., D.E. Elrick, and B.E. Clothier. 1985. The Constant Head Well Permeameter: Effect of Unsaturated Flow. Soil Science 139:172-180.

Rice, R.C. 1967. Dynamic Response of Small Piezometers. Trans. Am. Soc. Agric. Eng. 10:80-83.

Richards, L.A. 1931. Capillary Conduction of Liquids in Porous Mediums. Physics 1:318-333.

Richards, L.A. 1965. Physical Condition of Water in Soils. In: Methods of Soil Analysis, 1st edition, A. Black (ed.), Agronomy Monograph 9, American Society of Agronomy, Madison, WI, pp. 128-152.

Richards, L.A., W.R. Gardner, and G. Ogata. 1956. Physical Processes Determining Water Loss from Soil. Soil Sci. Soc. Am. Proc. 20:310-314. [Instantaneous profile]

Rieu, M. and G. Sposito. 1991a. Fractal Fragmentation, Soil Porosity, and Soil Water Properties: I. Theory. Soil Sci. Soc. Am. J. 55:1231-1238.

Rieu, M. and G. Sposito. 1991b. Fractal Fragmentation, Soil Porosity, and Soil Water Properties: II. Applications. Soil Sci. Soc. Am. J. 55:1239-1244.

Rijtema, P.E. 1965. An Analysis of Actual Evapotranspiration. Agric. Res. Rept. 659. Center for Agricultural Publications and Documentation, Wageningen, The Netherlands.

Rijtema, P.E. and H. Wassink (eds.). 1969. Water in the Unsaturated Zone (Proc. Wageningen Symp), 2 Vols. IASH-UNESCO Studies and Reports in Hydrology 2, UNESCO, Paris.

Roberts, D.W. 1984. Soil Properties, Classification, and Hydraulic Conductivity Testing. EPA/SW-925 (NTIS PB87-155784). [K_{sat}: double-ring infiltrometer, cylinder permeameter, modified air-entry permeameter, cube method; K_{unsat}: crust, instantaneous profile]

Rogers, J.S. and A. Klute. 1971. The Hydraulic Conductivity Water Content Relationships During Non-Steady Flow through a Sand Column. Soil Sci. Soc. Am. Proc. 35:695-700.

Rogowski, A.S. 1972. Estimation of the Soil Moisture Characteristic and Hydraulic Conductivity: Comparison of Models. Soil Science 114:423-429.

Rogowski, A.S. 1990. Relationship of Laboratory and Field Determined Hydraulic Conductivity in Compacted Liners. EPA/600/2-90/025 (NTIS PB90-257775), 204 pp.

Rose, C.W. and A. Krishnan. 1967. A Method of Determining Hydraulilc Conductivity Characteristics for Non-Swelling Soils In Situ and of Calculating Evaporation from Bare Soil. Soil Science 103:369-373. [Instantaneous profile]

Rose, C.W., W.R. Stern, and J.E. Drummond. 1965. Determination of Hydraulic Conductivity as a Function of Depth and Water Content for Soil In Situ. Aust. J. Soil Res. 3:1-9. [Instantaneous profile]

Ross, P.J. and K.R.J. Smettem. 1993. Describing Soil Hydraulic Properties with Sums of Simple Functions. Soil Sci. Soc. Am. J. 57:26-29.

Roth, K., H. Flühler, W.A. Jury, and J.C. Parker (eds.). 1990. Field-Scale Water and Solute Flux in Soils. Birkhäuser Verlag, Boston, MA. [26 papers]

Roulier, N.H., L.H. Stolzy, J. Letey, and L.V. Weeks. 1972. Approximation of Field Hydraulic Conductivity by Laboratory Procedures on Intact Cores. Soil Sci. Soc. Am. Proc. 36:387-392. [Marshall, Millington-Quirk, Weeks-Richards equations]

Rubin, J. and R. Steinhardt. 1963. Soil Water Relations During Rain Infiltration: I. Theory. Soil Sci. Soc. Am. Proc. 27:246-251.

Rubin, J., R. Steinhardt, and P. Reiniger. 1964. Soil Water Content Relationships During Rain Infiltration: II. Moisture Content Profiles During Rains of Low Intensities. Soil Sci. Soc. Am. Proc. 28:1-5.

Russo, D. and E. Bresler. 1980. Field Determination of Soil Hydraulic Properties for Statistical Analysis. Soil Sci. Soc. Am. J. 44:697-702. [Dirksen tension infiltrometer]

Sai, J.O. and D.C. Anderson. 1991. State-of-the-Art Field Hydraulic Conductivity Testing of Compacted Soils. EPA/600/2-91/022 (NTIS PB91-206243), 95 pp. [Air entry permeameters, Guelph permeameter, Boutwell method, surface infiltrometers (ASTM double-ring, modified double-ring, box, single-ring, sealed double-ring), collection lysimeters (in situ monoliths), velocity permeameter, porous plate (tension) infiltrometers]

Saxton, K.E., W.J. Rawls, J.S. Romberger, and R.I. Papendick. 1986. Estimating Generalized Soil-Water Characteristics from Texture. Soil Sci. Soc. Am. J. 50:1031-1036. [Unsaturated hydraulic conductivity-texture relationships]

Scanlon, B.R. 1991. Evaluation of Moisture Flux from Chloride Data in Desert Soils. J. Hydrology 128:137-156.

Schmid, W.E. 1967. Field Determination of Permeability by the Infiltration Test. In: Permeability and Capillarity of Soils, ASTM STP 417, American Society for Testing and Materials, Philadelphia, PA, pp. 142-159. [USBR single-well methods]

Schuh, W.M. and R.L. Cline. 1990. Effect of Soil Properties on Unsaturated Hydraulic Conductivity Pore-Interaction Factors. Soil Sci. Soc. Am. J. 54:1509-1519. [Instantaneous profile]

Schuh, W.M., J.W. Bauder, and S.C. Gupta. 1984. Evaluation of Simplified Methods for Determining Unsaturated Hydraulic Conductivity of Layered Soils. Soil Sci. Soc. Am. J. 48:730-736. [Draining moisture and pressure profile, instantaneous profile]

Schuh, W.M., R.L. Cline, and M.D. Sweeney. 1988. Comparison of a Laboratory Procedure and a Textural Model for Predicting in Situ Soil Water Retention. Soil Sci. Soc. Am. J. 52:1218-1227.

Science and Education Administration. 1979. Infiltration Research Planning Workshop, Part I, State of the Art Reports. ARM-NC-4, U.S. Dept. of Agriculture.

Scotter, D.R., B.E. Clothier, and E.R. Harper. 1982. Measuring Saturated Hydraulic Conductivity and Sorptivity Using Twin Rings. Aust. J. Soil Research 20(4):295-304.

Shani, U. R.J. Hanks, E. Bresler, and C.A.S. Oliveira. 1987. Field Method for Estimating Hydraulic Conductivity and Matric

Potential-Water Content Relations. Soil Sci. Soc. Am. J. 51:298-302. [Dripper method, air entry permeameter]

Sharma, M.L. and M.W. Huges. 1985. Groundwater Recharge Estimation Using Chloride, Deuterium, and Oxygen-18 Profiles in the Deep Coastal Sands of Western Australia. J. Hydrology 81:93-109.

Sharma, M.L., G.A. Gardner, and C.G. Hunt. 1980. Spatial Variability of Infiltration in a Watershed. J. Hydrology 45:101-122.

Shouse, P.J., J.B. Sisson, T.R. Ellsworth, and J.A. Jobes. 1992. Estimating In Situ Unsaturated Hydraulic Properties of Vertically Heterogenous Soils. Soil Sci. Soc. Am. J. 56:1673-1679. [Instantaneous profile method]

Sidle, R.C. 1979. Infiltration Measurement and Soil Hydraulic Characteristics. In: Infiltration Research Planning Workshop, Part I, State of the Art Reports. ARM-NC-4, U.S. Dept. of Agriculture. [Sprinkler infiltrometers]

Simmers, I. (ed.). 1987. Estimation of Natural Groundwater Recharge. D. Reidel Publishing Co., Boston, MA, 510 pp. [32 papers presented at Symposium on Recharge of Groundwater, Antalya, Turkey, 1987]

Simmons, C.S., D.R. Nielsen, and J.W. Biggar. 1979. Scaling of Field-Measured Soil-Water Properties, I: Methodology; II: Hydraulic Conductivity and Flux. Hilgardia 47:77-173. [Instantaneous profile]

Sisson, J.B., A.H. Ferguson, and M. Th. Van Genuchten. 1980. Simple Method for Predicting Drainage from Field Plots. Soil Sci. Soc. Am. J. 44:1147-1152.

Smettem, K.R.J. and B.E. Clothier. 1989. Measuring Unsaturated Sorptivity and Hydraulic Conductivity Using Multiple Disc Permeameters. J. Soil Science 40:563-568.

Smiles, D.E. and A.G. Harvey. 1973. Measurement of Moisture Diffusivity in Wet Swelling Systems. Soil Science 116:391-399. [Tension infiltrometer]

Soil Conservation Service (SCS). 1975. Estimating Runoff. In: Engineering Field Manual, Soil Conservation Service, U.S. Department of Agriculture, Chapter 2.

Sokolow, A.A. and T.G. Chapman (eds.). 1974. Methods for Water Balance Computations: An International Guide for Research and Practice. The Unesco Press, Paris. [Precipitation, runoff, evaporation]

Spaans, E.J.A., J. Bouma, A.L.E. Lansu, and W.G. Wielemaker. 1990. Measured Soil Hydraulic Properties after Clearing of Tropical Rain Forest in a Costa Rican Soil. Trop. Agric. (Guildford, UK) 67:61-65.

Stallman, R.W. 1967. Flow in the Zone of Aeration. Adv. Hydroscience 4:151-195.

Starr, J.L., H.C. DeRoo, C.R. Frink, and J.-Y. Parlange. 1978. Leaching Characteristics of a Layered Field Soil. Soil Sci. Soc. Am. J. 42:386-391.

Stephens, D.B. and S.P. Neuman. 1980. Analysis of Borehole Infiltration Tests above the Water Table. Technical Report No. 35, Department of Hydrology and Water Resources, University of Arizona, Tucson, AZ.

Stephens, D.B. and S.P. Neuman. 1982a. Vadose Zone Permeability Tests: Summary. J. Hydrology Div. ASCE 108(HY5):623-639. [Review of USBR Methods]

Stephens, D.B. and S.P. Neuman. 1982b. Vadose Zone Permeability Tests: Steady State Results. J. Hydrology Div. ASCE 108(HY5):640-659.

Stephens, D.B. and S.P. Neuman. 1982c. Vadose Zone Permeability Tests: Unsteady Flow. J. Hydrol. Div. ASCE 108(HY5):660-677.

Stephens, D.B., K. Lambert, and D. Watson. 1984. Influence of Entrapped Air on Field Determinations of Hydraulic Properties in the Vadose Zone. In: Proc. Conf. Characterization and Monitoring of the Vadose Zone, National Water Well Association, Worthington, OH, pp. 57-76.

Stephens, D.B., D. Lambert, and D. Watson. 1987. Regression Models for Hydraulic Conductivity and Field Test of the Borehole Permeameter. Water Resources Research 23:2207-2214.

Stephens, D.B., M. Unruh, J. Havlena, R.G. Knowlton, E. Mattson, and W. Cox. 1988. Vadose Zone Characterization of Low-

Permeability Sediments Using Field Permeameters. Ground Water Monitoring Review 8(2):59-66. [Air entry, Guelph, constant-head, gas-pressure permeameters]

Stibbe, E., T.J. Thiel, and G.S. Taylor. 1970. Soil Hydraulic Conductivity Measurement by Field Monolith. Soil Sci. Soc. Am. Proc. 34:952-954.

Stockton, J.G. and A.W. Warrick. 1971. Spatial Variability of Unsaturated Hydraulic Conductivity. Soil Sci. Soc. Am. Proc. 35:847-848. [Millington-Quirk equation]

Stone, L.R., T.C. Olson, and M.L. Horton. 1973. Unsaturated Hydraulic Conductivity for Water Management Measured In Situ. South Dakota Acad. Sci. 52:168-178. [Instantaneous profile]

Stoner, D.W. 1985. Comparison of Two Techniques for In-Situ Measurement of the Hydraulic Conductivity Curve. In: Proc. [2nd] NWWA Conf. on Characterization and Monitoring of the Vadose (Unsaturated) Zone, National Water Well Association, Worthington, OH, pp. 1-8. [Instantaneous profile and crust methods]

Sukhija, B.S., D.V. Reddy, P. Nagabhushanam, and R. Chand. 1988. Validity of the Environmental Chloride Method for Recharge Evaluation of Coastal Aquifers, India. J. Hydrology 99:349-366.

Swartzendruber, D. 1987a. Rigorous Derivation and Interpretation of the Green and Ampt Equation. In: Proc. Int. Conf. Infiltration Dev. Appl. (Honolulu), Y.-S. Folk (ed.), Water Resour. Res. Center, Univ. of Hawaii, Manoa, pp. 28-37.

Swartzendruber, D. 1987b. A Quasi-Solution of Richards' Equation for the Downward Infiltration of Water into Soil. Water Resources Research 23:809-817.

Swartzendruber, D. and F.R. Clague. 1989. An Inclusive Infiltration Equation for Downward Water Entry Into Soil. Water Resources Research 25:619-626.

Swartzendruber, D. and W.L. Hogarth. 1991. Water Infiltration into Soil in Response to Ponded-Water Head. Soil Sec. Soc. Am. J. 55:1511-1515.

Swartzendruber, D. and T.C. Olson. 1961a. Sand-Model Study of Buffer Effects in the Double-Ring Infiltrometer. Soil Sci. Soc. Am. Proc. 25:5-8.

Swartzendruber, D. and T.C. Olson. 1961b. Model Study of the Double Ring Infiltrometer as Affected by Depth of Wetting and Particle Size. Soil Science 92:219-225.

Takagi, S. 1960. Analysis of the Vertical Downward Flow of Water through a Two-Layered Soil. Soil Science 90:98-103.

Talsma, T. 1987. Re-Evaluation of the Well Permeameter as a Field Method for Measuring Hydraulic Conductivity. Aust. J. Soil Res. 25:361-368.

Talsma, T. and P.M. Hallam. 1980. Hydraulic Conductivity Measurement of Forest Catchments. Aust. J. Soil Research 30:139-148. [Constant-head borehole infiltration]

Talsma, T. and J.-Y. Parlange. 1972. One-Dimensional Vertical Infiltration. Aust. J. Soil Res. 10:143-150.

Thompson et al. 1989. Techniques to Develop Data for Hydrogeochemical Models. EPRI EN-6637, Electric Power Research Institute, Palo Alto, CA.

Thornthwaite, C.W. and J.R. Mather. 1957. Instructions and Tables for Computing Potential Evapotranspiration and Water Balance. Publications in Climatology Vol. X, No. 3, Drexel Institute of Technology, Laboratory of Climatology, Centerton, NJ.

Topp, G.C. and M.R. Binns. 1976. Field Measurement of Hydraulic Conductivity with a Modified Air-Entry Permeameter. Can. J. Soil Sci. 56:139-147.

Tovey, R. and C.H. Pair. 1963. A Method of Measuring Water Intake Rate into Soil for Sprinkler Design. In: Proceedings of the Sprinkler Irrigation Association Open Technical Conference, pp. 109-118.

Tyler, S.W. and S.W. Wheatcraft. 1989. Application of Fractal Mathematics to Soil Water Retention Estimation. Soil Sci. Soc. Am. J. 53:987-996.

Tzimas, E. 1979. The Measurement of Soil-Water Hysteretic Relationships on a Soil Monolith. J. Soil Science. 30:529-534.

Unlu, K., M.L. Kavvas, and D.R. Nielsen. 1989. Stochastic Analysis of Field Measured Unsaturated Hydraulic Conductivity. Water Resources Research 25:2511-2519.

Unlu, K., D.R. Nielsen, J.W. Biggar, and F. Morkoc. 1990. Statistical Parameters Characterizing the Spatial Variability of Selected Soil Hydraulic Properties. Soil Sci. Soc. Am. J. 54:1537-1547. [Instantaneous profile]

U.S. Army Corps of Engineers. 1980. Simplified Field Procedures for Determining Vertical Moisture Flow Rates in Medium to Fine Textured Soils. Engineer Technical Letter, 21 pp. [Infiltration test basins]

U.S. Environmental Protection Agency (EPA). 1980. Design Manual: On-Site Waste Treatment and Disposal Systems. EPA/626/1-80/012.

U.S. Environmental Protection Agency (EPA). 1981. Process Design Manual for Land Treatment of Municipal Wastewater. EPA/625/1-81/013. U.S. Army Corps of Engineers, U.S. Department of the Interior, and the U.S. Department of Agriculture also are authors of this report. (Replaces design manual with same title published in 1977 as EPA/625/1-77/008.)

U.S. Environmental Protection Agency (EPA). 1986. Criteria for Identifying Areas of Vulnerable Hydrogeology Under RCRA: A RCRA Interpretive Guidance. EPA/530/SW-86/022 (Complete set: NTIS PB86-224946). [See Appendix C, Technical Methods for Calculating Time of Travel in the Unsaturated Zone, EPA/530/SW-86/022C (NTIS PB86-224987)]

U.S. Environmental Protection Agency (EPA). 1989. Requirements for Hazardous Waste Landfill Design, Construction, and Closure. EPA/625/4-89/022, 127 pp. Available from CERI.*

U.S. Public Health Service (PHS). 1969. Manual of Septic Tank Practice. Publ. No. 526, Government Printing Office, Washington DC, 85 pp.

Vachaud, G. 1967. Determination of the Hydraulic Conductivity of Unsaturated Soils from an Analysis of Transient Flow Data. Water Resources Research 3:697-705.

van Bavel, C.H.M., G.B. Stirk, and K.J. Brust. 1968. Hydraulic Properties of a Clay Loam Soil and the Field Measurement of Water Uptake by Roots: I. Interpretation of Water Content and Pressure Profiles. Soil Sci. Soc. Am. Proc. 32:310-317. [Instantaneous profile]

van Dam, J.C., J.N.M. Stricker, and P. Droogers. 1992. Inverse Method for Determining Soil Hydraulic Functions from One-Step Outflow Experiments. Soil Sci. Soc. Am. J. 56:1042-1050. [Parameter estimation]

van de Pol, R.M., P.J. Wierenga, and D.R. Nielsen. 1977. Solute Movement in a Field Soil. Soil Sci. Soc. Am. J. 41:10-13. [Sprinkler-imposed flux]

Van Genuchten, M.Th. 1979. Calculating the Unsaturated Hydraulic Conductivity with a New Closed-Form Analytical Model. Research Report No. 78-WR-08, Princeton University, Princeton, NJ.

Van Genuchten, M.Th. 1980. A Closed Form Equation for Predicting the Hydraulic Conductivity of Unsaturated Soils. Soil Sci. Soc. Am. J. 44:892-898.

Van Genuchten, M.T. and D.R. Nielsen. 1985. On Describing and Predicting the Hydraulic Properties of Soils. Annales Geophysical 3(5):615-628.

Van Genuchten, M.Th., F. Kaveh, W.B. Russell, and S.R. Yates. 1989. Direct and Indirect Methods for Estimating to Hydraulic Properties of Unsaturated Soils. In: Land Qualities in Space and Time, J. Bouma and A.K. Bregt (eds.), Pudoc, Wageningen, The Netherlands, pp. 61-72. [Parameter estimation]

van Grinsven, J.J.M., H.W.G. Booltink, C. Dirksen, N. van Breemen, N. Bongers, and N. Waringa. 1988. Automated In Situ Measurement of Unsaturated Water Flux. Soil Sci. Soc. Am. J. 52:1215-1218.

Vroon, H.R.J., L.W. Dekker, and J.M.H. Hendrickx. 1988. A Method for Measuring Hydraulic Properties of Brittle Soil Horizons. Soil Sci. Soc. Am. J. 52:292-295. [Column method]

Wagenet, R.J. 1986. Water and Solute Flux. In: Methods of Soil Analysis, Part 1, 2nd edition, A. Klute (ed.), Agronomy

Monograph No. 9, American Society of Agronomy, Madison, WI, pp. 1055-1088.

Walker, J. and S.K. Chong. 1986. Characterization of Compacted Soil Using Sorptivity Measurements. Soil Sci. Soc. Am. J. 50:288-291. [Tension infiltrometer]

Walker, G.R., I.D. Jolly, and P.G. Cook. 1991. A New Chloride Leaching Approach to the Estimation of Diffuse Recharge Following a Change in Land Use. J. Hydrology 128:49-67.

Wall, B.H. and R.D. John. 1982. Comment on "A Simplified Functions Approach for Determining Soil Hydraulic Conductivities and Water Characteristics In Situ." Water Resources Research 18:1299. [Draining pressure profile]

Warrick, A.L. 1985. Point and Line Infiltration Calculations of the Wetted Soil Surface. Soil Sci. Soc. Am. J. 49:1581-1583.

Warrick, A.W. 1992. Models for Disk Infiltrometers. Water Resources Research 28(5):1319-1327.

Warrick, A.W. and A. Amoozegar-Fard. 1981. Areal Prediction of Water and Solute Flux in the Unsaturated Zone. Final Report, U.S. EPA Grant No. R-804751 (NTIS PB81-191124).

Warrick, A.W. and A.A. Hussen. 1993. Scaling of Richards' Equation for Infiltration and Drainage. Soil Sci. Soc. Am. J. 57:15-18.

Warrick, A.W., G.J. Mullen, and D.R. Nielsen. 1977. Predictions of the Soil Water Flux Based upon Field-Measured Soil-Water Properties. Soil Sci. Soc. Am. J. 41:14-19.

Watson, K.K. 1966. An Instantaneous Profile Method for Determining the Hydraulic Conductivity of Unsaturated Porous Materials. Water Resources Research 2:709-715.

Watson, K.K. 1967. The Measurement of the Hydraulic Conductivity of Unsaturated Porous Material Utilizing a Zone of Entrapped Air. Soil Sci. Soc. Am. Proc. 31:716-720.

Watson, K.W. and R.J. Luxmoore. 1986. Estimating Macroporosity in a Forest Watershed by Use of a Tension Infiltrometer. Soil Sci. Soc. Am. J. 50:578-582.

Weeks, E.P. 1978. Field Determination of Vertical Permeability to Air in the Unsaturated Zone. U.S. Geological Survey Professional Paper 1051, 41 pp.

Weeks, L.V. and S.J. Richards. 1967. Soil Water Properties Computed from Transient Flow Data. Soil Sci. Soc. Am. Proc. 31:721-725.

Wells, C.E. 1988. Design and Installation of a Simple, Cost Effective Multi-Level Monitoring Well System. In: Proc. 2nd Nat. Outdoor Action Conf. on Aquifer Restoration, Ground Water Monitoring and Geophysical Methods, National Water Well Association, Dublin, OH, pp. 415-433. [Wastewater lagoon water budget]

White, I. and P. Broadbridge. 1988. Constant Rate Rainfall Infiltration: A Versatile Nonlinear Model: 2. Applications and Solutions. Water Resources Research 24:155-162.

White, I. and K.M. Perroux. 1987. Use of Sorptivity to Determine Field Soil Hydraulic Properties. Soil Sci. Soc. Am. J. 51:1093-1101. [Laboratory core/tension infiltrometer]

White, I. and K.M. Perroux. 1989. Estimation of Unsaturated Hydraulic Conductivity from Field Sorptivity Measurements. Soil Sci. Soc. Am. J. 53:324-329.

White, I. and M.J. Sully. 1987. Macroscopic and Microscopic Capillary Length and Time Scale from Field Infiltration. Water Resources Research 23:1514-1522.

White, I, M.J. Sully, and M.D. Melville. 1989. Use and Hydrological Robustness of Time-to-Incipient Ponding. Soil Sci. Soc. Am. J. 53:1343-1346.

Williams, R.D., L.R. Ahuja, and J.W. Naney. 1992. Comparison of Methods to Estimate Soil Water Characteristics from Soil Texture, Bulk Density, and Limited Data. Soil Science 153:172-184.

Wilmott, C.J. 1977. WATBUG: A FORTRAN IV Algorithm for Calculating the Climate Water Budget. Water Resources Center Contribution No. 23, University of Delaware, Newark, DE.

Wilson, L.G. 1980. Monitoring in the Vadose Zone: A Review of Technical Elements. EPA/600/7-80/134 (NTIS PB81-125817).

Wilson, L.G. 1982. Monitoring in the Vadose Zone, Part II. Ground Water Monitoring Review 2(4):31-42.

Wilson, L.G. and J.N. Luthin. 1963. Effect of Air Flow Ahead of the Wetting Front on Infiltration. Soil Science 96:136-143.

Wilson, G.V. and R.J. Luxmoore. 1988. Infiltration, Macroporosity, and Mesoporosity Distributions in Two Forested Watersheds. Soil Sci. Soc. Am. J. 52:329-335. [Double-ring and tension infiltrometers]

Wilson, G.V., J.M. Alfonsi, and P.M. Jardine. 1989. Spatial Variability of Saturated Hydraulic Conductivity of the Subsoil of Two Forested Watersheds. Soil Sci. Soc. Am. J. 53:679-685.

Wind, G.P. 1955. Field Experiment Concerning Capillary Rise of Moisture in Heavy Clay Soil. Neth. J. Agric. Sci. 3:60-69.

Winger, Jr., R.J. 1960. In-Place Permeability Tests and Their Use in Subsurface Drainage. In: Trans. Int. Congr. Comm. Irrig. Drain., (4th, Madrid), pp. 11.417-11.469.

Winneberger, J.T. 1974. Correlation of Three Techniques for Determining Soil Permeability. J. Environ. Health 37:108-118.

Wolf, S.H., J.C. LaChance, and L.J. Wolf. 1991. Techniques for Monitoring Flux and Transport Between Ground Water and Surface Water Systems. Ground Water Management 5:179-192 (5th NOAC).

Wooding, R.A. 1968. Steady Infiltration from a Shallow Circular Pond. Water Resources Research 4:1259-1273.

Wösten, J.H.M. and M.Th. Van Genuchten. 1988. Using Texture and Other Soil Properties to Predict the Unsaturated Hydraulic Conductivity Functions. Soil Sci. Soc. Am. J. 52:1762-1770.

Young, S.C. and R.B. Clapp. 1989. The Importance of Climatological Variability and the Rate at which Waste Is Added to Modeling Water Budgets at Landfills. In: Proc. 4th Int. Conf. on Solving Ground Water Problems with Models (Indianapolis, IN), National Water Well Association, Dublin, OH, pp. 879-898.

Youngs, E.G. 1964. An Infiltration Method of Measuring the Hydraulic Conductivity of Unsaturated Porous Materials. Soil Science 97:307-311. [Sprinkler-imposed flux]

Youngs, E.G. 1991. Hydraulic Conductivity of Saturated Soils. In: Soil Analysis: Physical Methods, K.A. Smith and C.E. Mullins (eds.), Marcel Dekker, New York, NY, pp. 161-207. [Above water table: borehole permeameter, air-entry permeameter, ring infiltrometers]

Zachmann, D.W., P.C. DuChateau, and A. Klute. 1981. The Calibration of the Richards Flow Equation for a Draining Column by Parameter Identification. Soil Sci. Soc. Am. J. 45:1012-1015.

Zachmann, D.W., P.C. DuChateau, and A. Klute. 1982. Simultaneous Approximation of Water Capacity and Soil Conductivity by Parameter Identification. Soil Science 134:157-163.

Zanger, C.N. 1953. Theory and Problems of Water Percolation. Engineering Monograph No. 8, U.S. Dept. of the Interior, Bureau of Reclamation, Denver, CO.

Zegelin, S. and I. White. 1982. Design for a Field Sprinkler Infiltrometer. Soil Sci. Soc. Am. J. 46:1129-1133.

Zepp, H. and A. Belz. 1992. Sensitivity and Problems in Modelling Soil Moisture Conditions. J. Hydrology 131:227-238.

*ORD Publications, U.S. EPA Center for Environmental Research Information, P.O. Box 19963, Cincinnati, OH 45268-0963 (513-569-7562).

SECTION 8

VADOSE ZONE WATER BUDGET CHARACTERIZATION METHODS

Water movement and transport of contaminants in the vadose zone is determined by the amount of **precipitation** that enters the ground by **infiltration**, and the amount of water that is removed from the soil by **evaporation** from bare soil or by **evapotranspiration** where vegetation covers the soil. This section contains information on more than 50 techniques for measuring or estimating: (1) Hydrometeorological parameters, and (2) evaporation and evapotranspiration for water budget calculations in the vadose zone and shallow groundwater systems. Methods for measuring and estimating infiltration are covered in Section 7.1.

Hydrometeorological Data

Table 8-1 provides some general summary information on 38 techniques for measuring six major hydrometeorological parameters and identifies sections of this guide were more detailed information can be found. **Precipitation** is a primary input into water budget calculations, and devices for measuring precipitation fall into two main categories: (1) **Manual** gages (Section 8.1.1), and (2) **recording** gages (Section 8.1.2). Measurement of **humidity** (Sections 8.1.3 and 8.1.4) might be required during field work for protection of health and safety and are required with most micrometeorological methods for measuring evapotranspiration (Section 8.4). Other hydrometeorological measurements might be required for monitoring weather conditions, such as **temperature** (Sections 8.2.1 and 8.2.2), **windspeed** (Section 8.2.3), and **wind direction** (Section 8.2.4). Measurement or estimation of these same parameters, as well as **atmospheric pressure** (Section 8.2.5) and **insolation** or **radiation** measurement (Sections 8.2.6 and 8.2.7), might be required in order to quantify the evapotranspiration component of water budget studies (discussed further below). Although numerous techniques and devices have been developed for hydrometeorological measurements, most of the parameters of interest usually can be estimated for purposes of vadose zone water budget studies by using data from nearby weather stations or interpolations using hydrometeorological tables or maps. Consequently, only those methods relevant to health and safety (temperature, humidity, windspeed, and direction) are likely to be used routinely during site investigations. Table 8-1 identifies the specific hydrometeorological techniques or devices that are most commonly used for site investigations. ASTM (1986) provides guidance on determining the operational comparability of meteorological measurements.

Evaporation and Evapotranspiration

Water that reaches the earth's surface can return to the atmosphere either by **evaporation** from free water surfaces or bare soil, or by **transpiration** by plants. The term **evapotranspiration** (ET) specifically refers to the combined effects of evaporation and transpiration from the land surface, but also might be used loosely to refer to the combined effects of evaporation from water and soil surfaces and transpiration. ET is a critical component of vadose zone water budget calculations, and is one of the most difficult of these components to measure accurately. The numerous methods that have been developed for measuring or estimating ET can be broadly classified as **water budget** or **balance** methods and **micrometeorological** methods. Table 8-1 summarizes information on 10 water balance methods and 6 micrometeorological methods, and identifies specific applications for each method (water evaporation, bare soil evaporation, evapotranspiration, and transpiration). Most of these methods are too complex and time-consuming for routine site investigations.

Lysimeters (Section 8.3.1) and **soil moisture** monitoring (Section 8.3.2) probably are the most commonly used methods for measuring evapotranspiration where site-specific data are required. Most vadose zone hydrologic models use **empirical equations** (Section 8.4.1) and use data from nearby weather stations data and published maps. The physically-based **Penman equation** (and various methods developed as refinements and adaptations of the Penman equation) probably is the most commonly used method for estimation of evaporation and/or evapotranspiration, where some measurements of meteorological data are feasible but the more complex measurements and instrumentation of other micrometeorological methods are not feasible.

Table 8-1 Summary Information on Vadose Zone Water Budget Characterization Methods

Technique	Parameters Measured	Manual/ Automatic	S/A/R	Section	Tables
Water-Related Hydrometeorological Measurements			A		
Sacramento Gage	Rain	Manual	± 1 mm[a]	8.1.1	8-2
Storage Gage	Rain	Manual	"	8.1.1	8-2
Automatic Wet/Dry Collectors	Rain/Snow	Either	"	8.1.1	8-2
Weighing Gage	Rain/Snow	Automatic	"	8.1.2	8-2
Tipping Bucket Gage	Rain	Automatic	"	8.1.2	8-2
Float Gage	Rain	Automatic	"	8.1.2	8-2
			S/A/R		
Sling Psychrometer	Humidity	Manual	0.1/0.5/--	8.1.3	8-2
Aspirated Psychrometer	Humidity	Either	0.02/0.1/--	8.1.3	8-2
Thermocouple Psychrometer	Humidity	Either	?	6.1.2	6-1, 6-3
Mechanical Hygrometers	Humidity	Either	1.0/5.0/20 to 100%	8.1.4	8-2
Dew-/Frost-Point Hygrometer	Humidity	Either	.05/0.25/--	8.1.4	8-2
Dew Cell/Probes	Humidity	Automatic	0.5/2.0/10 to 100%	8.1.4	8-2
Electric Hygrometers	Humidity	Either	0.5/2.0/5.0 to 98%	8.1.4	8-2
Diffusion Hygrometers	Humidity	?	?	8.1.4	8-2
Absorption Spectra Hygrometers	Humidity	?	?	8.1.4	8-2
Other Hydrometeorological Measurements			A/R		
Liquid-in-Glass Thermometer	Temperature	Manual	±0.5°C/-40 to +60[b]	8.2.1	
Bi-Metal Thermometer	Temperature	Either	"	8.2.1	
Bourdon Tube Thermometer	Temperature	Either	"	8.2.1	
Thermocouple	Temperature	Either	"	8.2.2	
Metallic Resistance Bulb	Temperature	Either	"	8.2.2	
Thermistor	Temperature	Either	"	8.2.2	
Cup Anemometers	H windspeed	Either	1.0 to 50/±0.5m/s[a]	8.2.3	8-2
Windmill Anemometers	V-H windspeed	Either	"	8.2.3	8-2
Pressure Anemometers	H windspeed	Manual	"	8.2.3	8-2
Hot-Wire Anemometer	V-H windspeed	Automatic	"	8.2.3	8-2
Acoustic Anemometer	V-H windspeed	Automatic	"	8.2.3	8-2
Wind Vanes	Direction	Either	0.5 to 50/±5°	8.2.4	8-2
Wind Cones	Direction	Manual	"	8.2.4	8-2
			S/A		
Mercury Barometer	Air pressure	Manual	?	8.2.5	
Altimeter	Air pressure	Manual	2 hPa/±0.2%	8.2.5	
Precision Aneroid	Air pressure	Either	0.5 hPa/?	8.2.5	
			A		
Thermopile Pyranometers	Global rad.	Automatic	±0.1 to 0.5 mW/cm^2	8.2.6	8-2
Bimetallic Pyranometer	Global rad.	Either	±1.0 mW/cm^2	8.2.6	8-2
Photovoltaic Pyranometer	Global rad.	Either	?	8.2.6	8-2
Net Radiometers	Net flux	Either	?	8.2.7	8-2
Pyrheliometers	Direct rad.	Either	?	8.2.7	8-2

Boldface = Most commonly used instruments/methods.
S = Sensitivity = The smallest fraction of a division on a scale on which a reading can be made directly or by estimation; A = Accuracy = The closeness with which an observation approaches the true value; R = Range of relative humidity that can be measured.

[a]Recommended accuracy by World Meteorological Organization. Less precise measurements might be acceptable, depending on the purpose of measurements.
[b]Range and accuracy of specific thermometers can range considerably, value shown is the recommended specification in U.S. EPA (1987b).

Table 8-1 (cont.)

Technique	Parameters Measured	Manual/ Automatic	Accuracy	Section	Tables
Evapotranspiration (Water Balance Methods)					
Lysimeters	WE,SE,ET,T	Either	Moderate to high[a]	8.3.1	8-3
Soil Moisture Monitoring	SE,ET,T	Manual	Moderate to high[a]	8.3.2	8-3
Water Budget Methods	WE,SE,ET,T	Manual	Low to high	8.3.3	8-3
Evaporation Pans	WE	Manual	Moderate	8.3.4	8-3
Evaporimeter	SE	Manual	High[a]	8.3.5	
Atmometers	SE,T	Manual	Moderate	8.3.5	8-3
Chloride Tracer	SE,ET,T	Manual	Moderate	8.3.6	
Ground-Water Fluctuation	SE,ET	Manual	Moderate	8.3.7	8-3
Other Transpiration Methods	T	Manual	Moderate to high[a]	8.3.8	8-3
Thermal Infrared	WE,SE,ET	Either	Low to moderate	1.1.3	1-3
Evapotranspiration (Micrometeorological)					
Empirical Equations	WE,SE,ET,T	Manual	Moderate to high	8.4.1	8-3
Physically-Based Equations	WE,SE,ET	Either	Moderate to high	8.4.2	8-3
Mass Transfer Methods	WE,ET,T	Either	Moderate to high	8.4.3	8-3
Energy Budget Methods	WE,SE,ET,T	Either	Moderate to high	8.4.4	8-3
Profile/Gradient Method	WE,SE,ET	Either	Low to moderate	8.4.5	8-3
Eddy Correlation	WE,ET	Either	High	8.4.6	8-3

Boldface = Most commonly used methods.
WE = Water evaporation; SE = Bare soil evaporation; ET = Evapotranspiration; T = transpiration.

[a]For high accuracy, numerous measurements at different locations might be required to adequately characterize the variability of evapotranspiration.

8. VADOSE ZONE WATER BUDGET CHARACTERIZATION METHODS

8.1 WATER-RELATED HYDROMETEOROLOGICAL DATA

8.1.1 Precipitation (Nonrecording Gages)

Other Names Used to Describe Method: Standard gage, sacramento gage, conduit gage.

Uses at Contaminated Sites: Monitoring of site conditions during field work; measuring precipitation for water budget analysis.

Device Description: Nonrecording gages require visual observation or manual measurement to record the amount of precipitation, even though some types might involve automated handling of collected precipitation. **Sacramento gage:** An 8-inch diameter receiving funnel, routes precipitation into a measuring tube with a cross-sectional area one-tenth that of the gage. The funnel attached to the collector both directs the precipitation into the tube and minimizes evaporation loss (Figure 8.1.1). Accumulated precipitation is measured periodically. Snow and other forms of frozen water are melted before measurement in order to give the equivalent amount of rainfall. The receiving cylinder can be clear with graduated markings for direct readings, or depth is measured using a measuring stick. **Storage gages** are similar to funnel gages, except that the storage container is large enough to store the seasonal catch and oil or other evaporation suppressing material is added to reduce evaporation between measurement. **Automatic wet/dry precipitation collectors** are specialized nonrecording instruments, where chemical and/or radioactive analysis of precipitation is required. The collector is built with a sensor, which detects the onset and cessation of precipitation, and automatically releases a lid to open and cover the collector, which prevents evaporation of the samples collected between precipitation events. **Other manual gages:** A wide variety of inexpensive gages, with various shapes for openings and graduated scales for measuring precipitation, are available.

Device Selection Considerations: **Sacramento Gage Advantages:** (1) Is inexpensive and easy to use; and (2) has no moving parts or electronic equipment to malfunction. **Sacramento Gage Disadvantages:** (1) Accurate characterization of precipitation events requires measurement after each precipitation event, which is difficult unless personnel are readily available to take readings at the required intervals; and (2) tend to underestimate precipitation that falls as snow. **Storage Gages:** Used at inaccessible sites where seasonal measurements are adequate for data needs. **Automatic Precipitation Collectors:** Used to collect bulk samples of precipitation for chemical analysis. Standard collectors require manual recording of the precipitation that is collected, but recent advances allow both automated recording of precipitation amounts and collection of snow and rain samples for chemical analysis (Purcell and Brown, 1991).

Frequency of Use: The Sacramento gage is the standard nonrecording gage used in the United States.

Standard Methods/Guidelines: NWS Specification No. 450.2301.

Sources for Additional Information: Brakensiek et al. (1979), Brock and Nicolaidis (1984), Lockhart (1989a), Malone (1951), National Weather Service (1972), U.S. EPA (1985), U.S. Geological Survey (1980), WMO (1971). See also, Table 8-2. Most of the general hydrology texts listed in Table 8-3 also discuss methods for measuring precipitation.

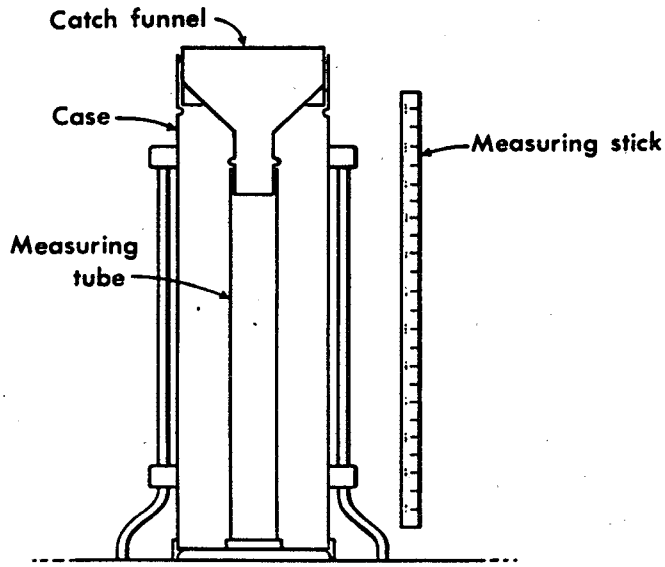

Figure 8.1.1 Typical non-recording rain gage (Kazmann, 1988, by permission).

8. VADOSE ZONE WATER BUDGET CHARACTERIZATION METHODS

8.1 WATER-RELATED HYDROMETEOROLOGICAL DATA

8.1.2 Precipitation (Recording Gages)

Other Names Used to Describe Devices: Weighing, Fergusson, or universal gage; tipping bucket gage; float gage.

Uses at Contaminated Sites: Measuring precipitation at remote sites or where accurate characterization of the amount and intensity of precipitation is required for water budget analysis.

Device Description: **Weighing gage:** A mechanical recording device is attached to a scale, which provides continuous weight measurements of precipitation that enters a cylinder gage (Figure 8.1.2a). Changes in weight are recorded on a chart recorder. **Tipping bucket gage:** A pair of small containers designed so that when a certain amount of rainfall (typically 0.01 inches) falls in one of the containers, it tips, and moves the other container into position to receive the next rainfall (Figure 8.1.2b). When the collection container empties into a storage container, an electrical contact is closed and the event is recorded on an electronic data logger. **Float gages** are cylinder gages equipped with a float and a recording device to automate measurement (used in Great Britain). Special features, which can be used with any gage, include: (1) **Shields** to improve collection efficiency of snow, (2) **heaters** to melt frozen precipitation so it will not clog the collectors or funnels of the gage, and (3) suppressants to reduce evaporation losses.

Device Selection Considerations: **Weighing Gage Advantages:** (1) Are very reliable; (2) equipment is readily available; and (3) measures both rain and frozen precipitation. **Weighing Gage Disadvantages:** (1) Manual reading of the chart recorder is required; (2) collection container usually must be emptied manually; and (3) measurements of snow might not be accurate (accuracy can be increased by shielding [Simmons and Bigelow (1990)]. **Tipping Bucket Gage Advantages:** (1) Data are generated electronically, which facilitates data analysis, and (2) is reliable and equipment is readily available. **Tipping Bucket Gage Disadvantages:** (1) Requires more maintenance than weighing gages; (2) is not accurate for measuring snowfall; and (3) requires power source for recording.

Frequency of Use: The weighing gage is the official precipitation measurement device of the National Weather Service. Tipping bucket gages are both readily available and widely used.

Standard Methods/Guidelines: **Weighing gage:** NWS Specification No. 450.2201.

Sources for Additional Information: Brakensiek et al. (1979), Brock and Nicolaidis (1984), Lockhart (1989a), Malone (1951), National Weather Service (1972), U.S. EPA (1985), U.S. Geological Survey (1980), WMO (1971). See also, Table 8-2. Most of the general hydrology texts listed in Table 8-3 also discuss methods for measuring precipitation.

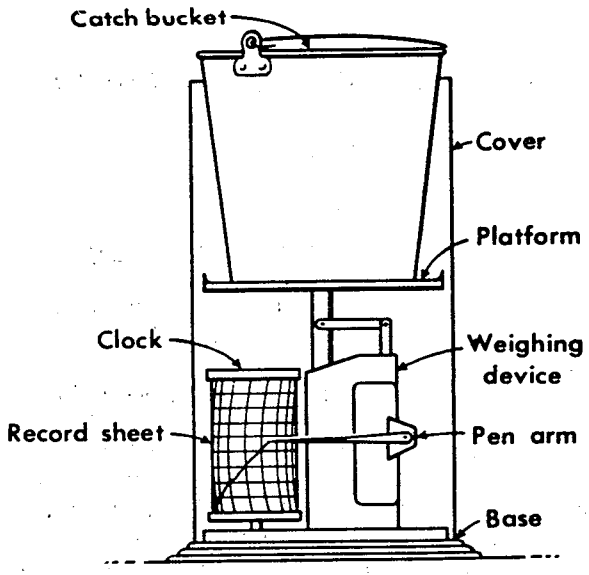

(a)

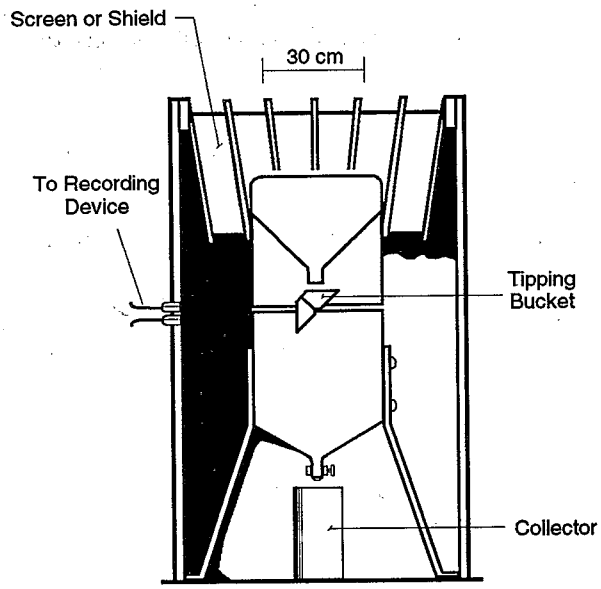

(b)

Figure 8.1.2 **Recording rain gages: (a) Typical weighing rain gage (Kazmann, 1988, by permission); (b) Typical tipping bucket rain gage (Dunne and Leopold, 1978, from: *Water in Environmental Planning* by Dunne and Leopold, Copyright © 1978 by W.H. Freeman and Company, reprinted with permission).**

8. VADOSE ZONE WATER BUDGET CHARACTERIZATION METHODS

8.1 WATER-RELATED HYDROMETEOROLOGICAL DATA

8.1.3 Humidity Measurement (Psychrometers)

Other Names Used to Describe Device: Sling psychrometer, dry-bulb/wet-bulb thermometer, aspirated psychrometer, thermocouple psychrometers.

Uses at Contaminated Sites: Estimating effective air temperature when it is very hot; psychrometers are required for several micrometeorological evapotranspiration methods (profile, eddy correlation, mass transfer).

Device Description: Psychrometers operate on the principle of reduction of temperature by evaporation.* **Sling pychrometer:** A dry-bulb/wet-bulb thermometer (two matched mercury-in-glass thermometers mounted on a metal frame with the bulb of one covered by a moistened wick) is attached to a handle with a chain so that the thermometer can swing around to equilibrate (Figure 8.1.3). Charts are used to determine relative humidity based on the difference in temperature between the two thermometers. Readings from a static dry-bulb/wet-bulb thermometer also can be used, but are not quite as accurate. **Aspirated psychrometers** are dry-bulb/wet-bulb thermometers in which a motor-driven fan or blower draws air over the thermometers at a constant rate. As with the sling psychrometer, humidity is determined using charts. **Thermocouple psychrometers** are discussed in Section 6.1.2.

Device Selection Considerations: Sling psychrometers are accurate, readily available, and easy to use. Aspirated psychrometers provide greater accuracy (Table 8-1), but require a power source and involve more complex installation procedures, such as use of a radiation shield. Humidity should be monitored whenever use of protective clothing in hot temperatures creates a possibility of heat stress.

Frequency of Use: Commonly used.

Standard Methods/Guidelines: ASTM (1982, 1984a).

Sources for Additional Information: Berry et al. (1945), Lockhart (1989a), Spilhaus and Middleton (1973), U.S. EPA (1987a,b), U.S. Geological Survey (1980), Wexler (1965), WMO (1971). See also, Table 8-2.

*Note that the terms "psychrometer" and "hygrometer" might be used interchangeably in the published literature. In this guide, the term psychrometer is applied to methods involving evaporation and hygrometer to any other method of measuring humidity.

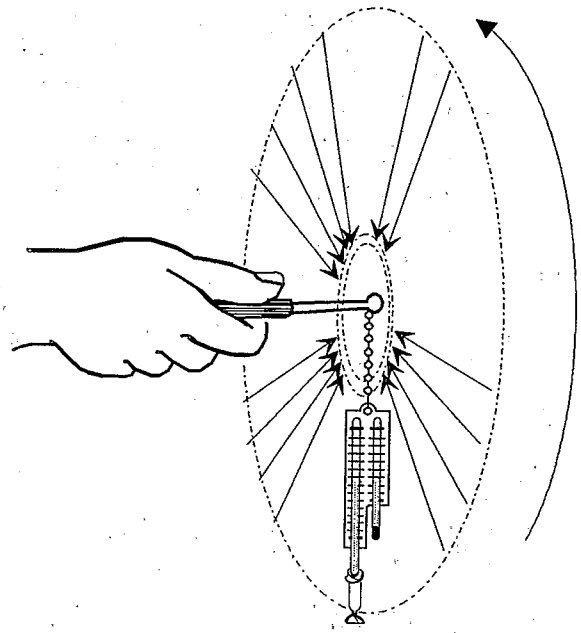

Figure 8.1.3 Sling psychrometer (in motion) for obtaining wet-bulb and dry-bulb temperatures for calculating relative humidity and dew point (Cameron et al., 1966).

8. VADOSE ZONE WATER BUDGET CHARACTERIZATION METHODS

8.1 WATER-RELATED HYDROMETEOROLOGICAL DATA

8.1.4 Humidity Measurement (Hygrometers)

Other Names Used to Describe Device: Mechanical hygrometer, dew-point or frost-point hygrometer, dew cell or dew probe, electric hygrometers (resistance, capacitance, or Dunmore Cell), diffusion hygrometer, absorption spectra hygrometers (infrared, ultraviolet, alpha radiation).

Uses at Contaminated Sites: Estimating effective air temperature when it is very hot; hygrometers required for several micrometeorological evapotranspiration methods (profile, eddy correlation, mass transfer).

Device Description: Hygrometers* include a wide variety of instruments that measure humidity by methods other than evaporative effects on temperature (psychrometry, previous section). **Mechanical hygrometer:** Operates on a similar principle to a bi-metal thermometer (Section 8.1.1), except that materials with differing response to air moisture (hair, wood, and natural and synthetic fibers) are used. Mechanical hygrometers usually are read manually, but can be attached to chart recorders. **Dew-point** and **frost-point** hygrometers measure the temperature at which dew or frost condenses from the air on a cooled surface, usually a polished mirror. The temperature can be converted into vapor pressure from vapor-pressure formulations or tables. For relative humidity, the dry-bulb temperature also must be measured, and measurement of atmospheric pressure is required for calculating the mixing ratio. **Dew cells** operate on the principle that the equilibrium vapor pressure of a saturated solution is a function of the temperature of the solution. The dew cell consists of a temperature sensor surrounded by a wick impregnated with a saturated solution of a salt, such as lithium chloride. A control circuit maintains the solution at the temperature at which the equilibrium vapor pressure of the solution is equal to the vapor pressure of the ambient air. The output from the sensor is indicated on a dial or is recorded on a chart, which is calibrated in terms of the dew-point temperature of the ambient air. Figure 8.1.4 illustrates a typical dew cell sensor housing and transmitter. **Electric** hygrometers measure changes in resistance or capacitance of a thin film of hygroscopic material. Most instruments consist of a sensor and a measuring circuit with the output indicated on a meter or recorded. The response of the sensor is an empirical function of relative humidity and temperature. **Diffusion** hygrometers involve the diffusion of moisture through porous membranes. **Absorption-spectra** hygrometers use the absorption spectra of water vapor, in response to infrared, ultra-violet, or alpha radiation.

Device Selection Considerations: **Mechanical hygrometers** are simple and inexpensive, but the least accurate of available methods. **Dew-/frost-point** hygrometers are the most accurate of available methods. **Dew cells** are less accurate than sling psychrometers, but can be adapted for automatic data collection. **Electric** hygrometers are comparable to dew cells in terms of accuracy, allow automatic data collection, and have the added advantage being able to measure a somewhat wider range of relative humidity. **Diffusion and absorption spectra hygrometers** are very accurate but require frequent attention and are expensive to purchase and maintain.

Frequency of Use: Mechanical hygrometers are widely used when a high degree of accuracy is not required. Diffusion and absorption spectra hygrometers are used primarily for specialized research purposes

Standard Methods/Guidelines: ASTM (1982, 1983, 1985b).

Sources for Additional Information: Berry et al. (1945), Lockhart (1989a), Spilhaus and Middleton (1973), U.S. EPA (1987a,b), U.S. Geological Survey (1980), Wexler (1957, 1965), Wexler and Brombacher (1951), WMO (1971). See also, Table 8-2.

* Note that the terms "psychrometer" and "hygrometer" might be used interchangeably in the published literature. In this guide, the term psychrometer is applied to methods involving evaporation and hygrometer to any other method of measuring humidity.

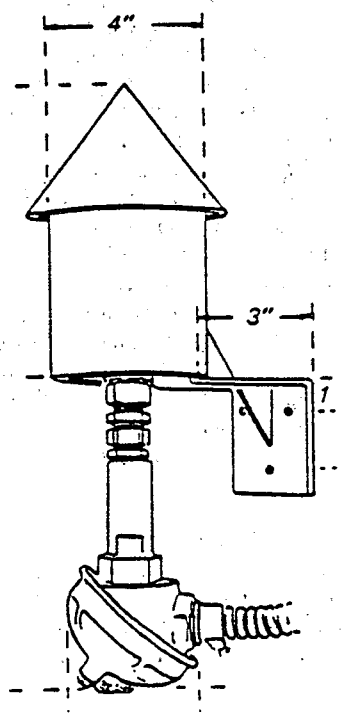

Figure 8.1.4 A typical dew cell sensor housing and transmitter (Lockhart, 1989a).

8.2 OTHER HYDROMETEOROLOGICAL DATA

8.2.1 Air Thermometry (Manual)

Other Names Used to Describe Device: Liquid-in-glass thermometer; deformation thermometers: Bi-metallic (flat spiral, single helix, multiple helix) and filled systems/Bourdon tubes (liquid-filled, vapor-pressure systems, gas-filled systems, mercury-in-steel).

Uses at Contaminated Sites: Measuring air temperature for calculating evaporation and relative humidity; health and safety monitoring for potential heat or cold stress.

Device Description: **Liquid-in-glass thermometer:** Liquid in a sealed glass tube expands and contracts in response to changes in temperature, and changes in the level read from a calibrated scale. The most common liquid-in-glass thermometer is the **mercury** thermometer (Figure 8.2.1a), which measures to -38.9°C or -38.0°F. Other liquids can be used if extremely low temperatures must be measured (**spirit thermometers**, ethyl alcohol freezes at -117°C, and **mercury-thallium** thermometers record to -59°C). **Deformation Thermometers:** Metals with different coefficients of expansion (**bi-metallic**, Figure 8.2.1b), or **filled systems** in which liquid, gas, or mercury in a sealed, coiled metal tube (**Bourdon tube**, Figure 8.2.1c), expand and contract in response to temperature changes, which are recorded by a moving pointer or pen on a calibrated scale. The accuracy of filled-systems depends on the extent to which the differential responses of different components in the system are compensated for. The most accurate types have **full compensation**, others provides for compensation of the detecting element only. See section 8.1.4 for discussion of radiation shields for air temperature measurements. Bi-metallic and filled-system thermometers can be used for continuous recording of temperature changes by attaching them to a rotating drum recorder.

Device Selection Considerations: Unless required data can be obtained easily and cost-effectively with manual temperature readings, these methods are not recommended. **Liquid-in-Glass Advantages:** (1) Have a simple design; (2) are easy to use; (3) are inexpensive; and (4) are accurate. **Liquid-in-Glass Disadvantages:** (1) Are very fragile; (2) have a relatively long time constant (the time required to respond to a temperature change is relatively long). **Bimetallic Advantages:** Are rugged. **Bimetallic Disadvantages:** (1) Severe mechanical shock or vibration can cause distortion resulting in large shifts in their calibration; (2) have time constant about the same as liquid-in-glass thermometers; and (3) are less accurate and more expensive the liquid-in-glass thermometers. **Filled System Advantages:** (1) Fundamental simplicity allows rugged construction; and (2) bulb and detection element can be separated by some distance. **Filled System Disadvantages:** (1) Are sensitive to severe shock, vibration, or other forms of mechanical abuse; and (2) capillary tube is not highly flexible or convenient to handle.

Frequency of Use: Liquid-in-glass thermometers are commonly used for monitoring temperature conditions under which field personnel are operating.

Standard Methods/Guidelines: ASTM (annual).

Sources for Additional Information: Brock and Nicolaidis (1984), Hardy and Fisher (1972-Chapter 1), Lockhart (1989a), Meteorological Office (1956-Chapter 1), Spilhaus and Middleton (1973), National Weather Service (1975-Chapter A.9), Stevens et al. (1975), Thompson et al. (1989), U.S. Geological Survey (1980), WMO (1971-Chapter 4, 1974-Chapter 4).

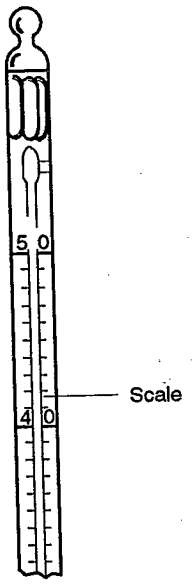

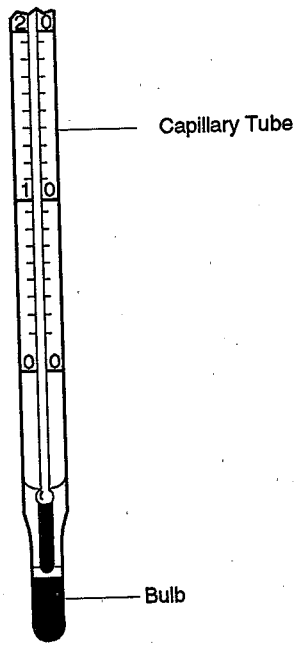

(a)

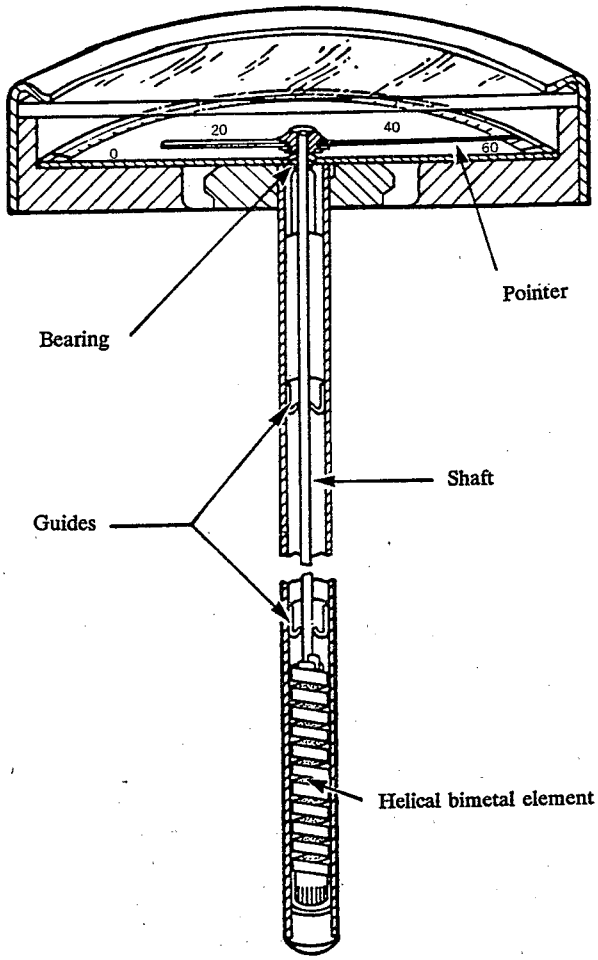

(b)

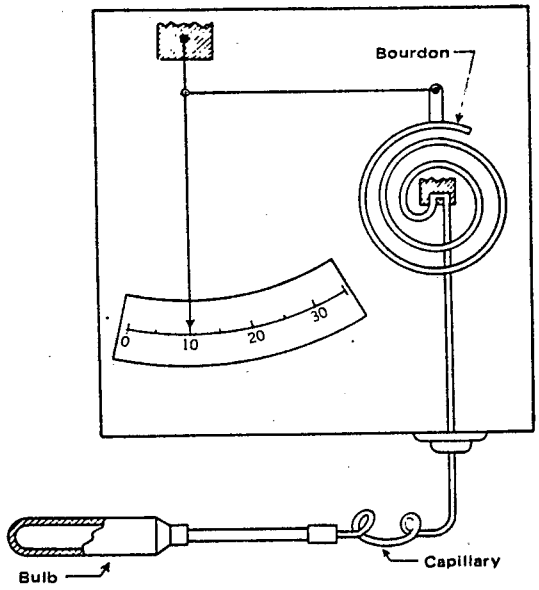

(c)

Figure 8.2.1 Manual thermometers: (a) Liquid-in-glass; (b) Deformation thermometer with helical-type bimetal elements; (c) Deformation thermometer with Bourdon tube (Stevens et al., 1975).

8.2 OTHER HYDROMETEOROLOGICAL DATA

8.2.2 Air Thermometry (Electric)

Other Names Used to Describe Device: Thermocouple, wire bobbin probe, wire resistance probe, wire bobbin bulb, wire resistance bulb, thermistor.

Uses at Contaminated Sites: Measuring temperature of air, soil, and/or water (see also, Sections 1.6 and 3.5.2).

Device Description: A **thermocouple** is a circuit made of two dissimilar metals (See Figure 1.6.1). A current is produced in the circuit when the two junctions are at different temperatures. Maintaining one junction at a known temperature and exposing the other allows sensitive and accurate measurement of temperature, provided that the temperature is calibrated. The two major types of **electrical-resistance thermometers** are: (1) **Metallic resistance thermometers**, which pass an electrical current through a wire (platinum and nickel-iron being the most commonly used wires), the resistance of which is proportional to temperature; and (2) **thermistors**, which are glass insulated semiconductors with a negative coefficient of resistance such that electrical resistance varies sharply with changes in temperature. For all types of thermometers, measurement of ambient air temperature requires some form of shielding so that the air temperature measurements are not influenced by radiant heat. Figure 8.2.2 provides examples of 14 types of radiation shields.

Device Selection Considerations: All electrical temperature measuring devices are well suited for electronic data logging. Thermocouples or thermistors are the recommended method for temperature measurement when automatic data recording is desired. **Thermocouple Advantages:** (1) Can be separated a considerable distance from the measuring instrument; (2) have very rapid response time (slower in water because they have to be cased); and (3) are relatively inexpensive. **Thermocouple Disadvantages:** (1) Measuring instruments used with thermocouples are relatively expensive; and (2) insertion of electric leads of different metals between the thermocouple and the measuring can cause errors as a result of extraneous voltages. **Resistance Thermometer Advantages:** (1) Both types can be separated a considerable distance from the measuring instrument; (2) metallic resistance thermometers are more sensitive to small temperature changes than thermocouples; and (3) thermistors are less expensive that metallic resistance bulbs and even more sensitive. **Resistance Thermometer Disadvantages:** (1) Metallic thermometers have slightly longer response time than thermocouples to changes in temperature; and (2) thermistor's response to temperature might change with time, requiring recalibration.

Frequency of Use: Thermistors and thermocouples are most commonly used.

Standard Methods/Guidelines: ASTM (annual).

Sources for Additional Information: Brock and Nicolaidis (1984), Hardy and Fisher (1972-Chapter 1), Lockhart (1989a), Meteorological Office (1956-Chapter 1), Spilhaus and Middleton (1973), National Weather Service (1975-Chapter A.9), Stevens et al. (1975), Thompson et al. (1989), U.S. Geological Survey (1980), WMO (1971-Chapter 4, 1974-Chapter 4).

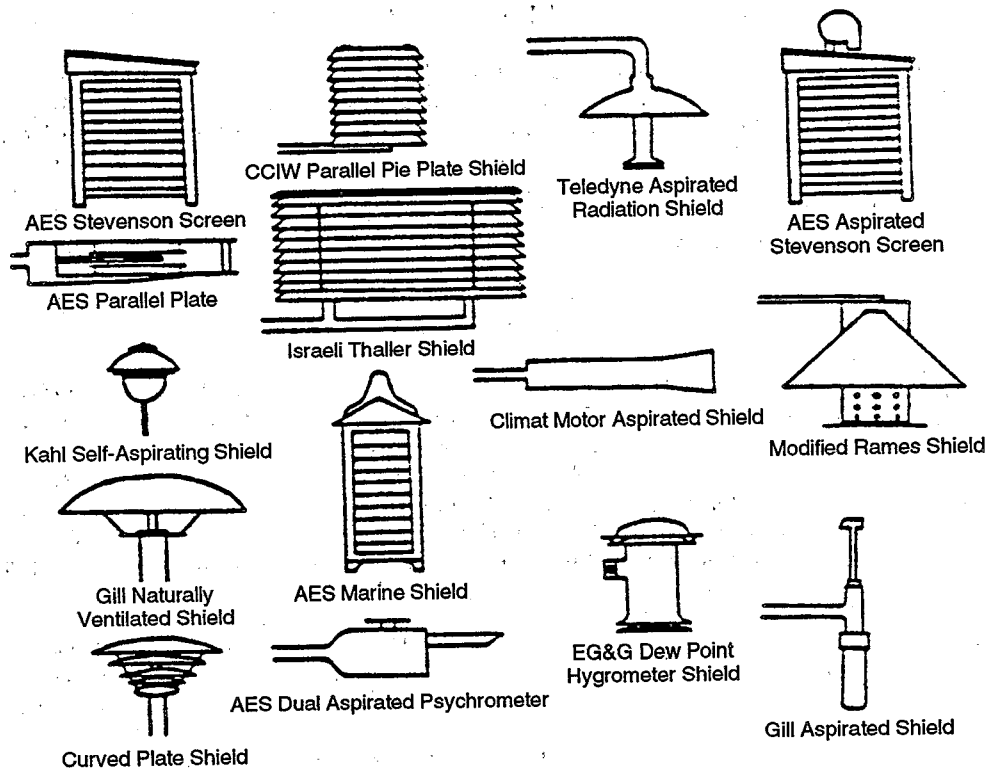

Figure 8.2.2 Examples of various types of radiation shields for air temperature measurements (Lockhart, 1989a, after McKay and McTaggart-Cowan, 1977).

8.2.3 Wind Speed

Other Names Used to Describe Device: Cup/bridled cup, windmill (air meter, propeller/aerovane), pressure anemometers (hand-held/pith-ball wind meter, Dines), hot-wire anemometer; acoustic/sonic anemometer, contact anemometer, condenser-discharge anemometer.

Uses at Contaminated Sites: Evaluating transport of atmospheric pollutants or dust from disposal sites; evaluating evaporation rates; evaluating wind chill for field work in the winter.

Device Description: Numerous specific types of anemometers have been developed to measure wind speed. Six major types of anemometers are described here. **Cup** anemometers consist of three or four cups mounted around a vertical axis on radial arms at equal angles, which allow the anemometer to be equally responsive to wind in any direction (Figure 8.2.3). The vertical shaft transfers the motion of the cups either to a counter or to a generator for electronic recording. **Windmill** anemometers include: (1) **Propeller** anemometers with helicoidal vanes, which rotate about an axis and drive a miniature generator with an electrical output that is proportional to the wind speed, and (2) **air meters** with flat vanes that records the number of linear feet (or meters) of air that has passed the instrument during its exposure. Propeller anemometers are usually combined with a wind vane to maintain an orientation directly into the wind, but sometimes are built with three propellers oriented at right angles to each other to measure horizontal and vertical components separately. Manually operated **pressure** anemometers consist of a thin tube open at one end. The pressure change produced by air moving across the opening is proportional to the wind speed. In a variant of this, a pith ball rises in a graduate tube. **Hot-wire** and **acoustic** (or **sonic**) anemometers are very precise instruments, which measure velocity by measuring the change in resistance of a heated tungsten wire and accurately measuring sound velocity, respectively. A **contact** anemometer actuates an electrical contact at a rate that depends on windspeed. The number of contacts during a given time is indicated by the number of flashes of a lamp or sounds of a buzzer. A **condenser-discharge** anemometer is a type of contact device with an electrical circuit that indicates average windspeed.

Device Selection Considerations: Propeller and cup anemometers are the most common types because they are rugged, reliable, and accurate to within a few percent or less. Both are well suited for electronic data logging. Propeller-type anemometers can measure wind speeds up to 200 miles per hour; cup-type anemometers measure up to 100 miles per hour and can be constructed to be extremely sensitive to slight changes in speed. Pressure anemometers are not recommended unless manual measurement is acceptable. Hot-wire and acoustic anemometers are for specialized applications where accurate measurement of turbulence is required.

Frequency of Use: Both propeller and cup-type anemometers are widely used.

Standard Methods/Guidelines: ASTM (1985a, 1990).

Sources for Additional Information: Hardy and Fisher (1972-Chapter 3), Lockhart (1989a), Meteorological Office (1956-Chapter 5), National Weather Service (1975-Chapter A10), Spilhaus and Middleton (1973-Chapter 6), Thompson et al. (1989), U.S. EPA (1987a,b), U.S. Geological Survey (1980). See also, Table 8-2.

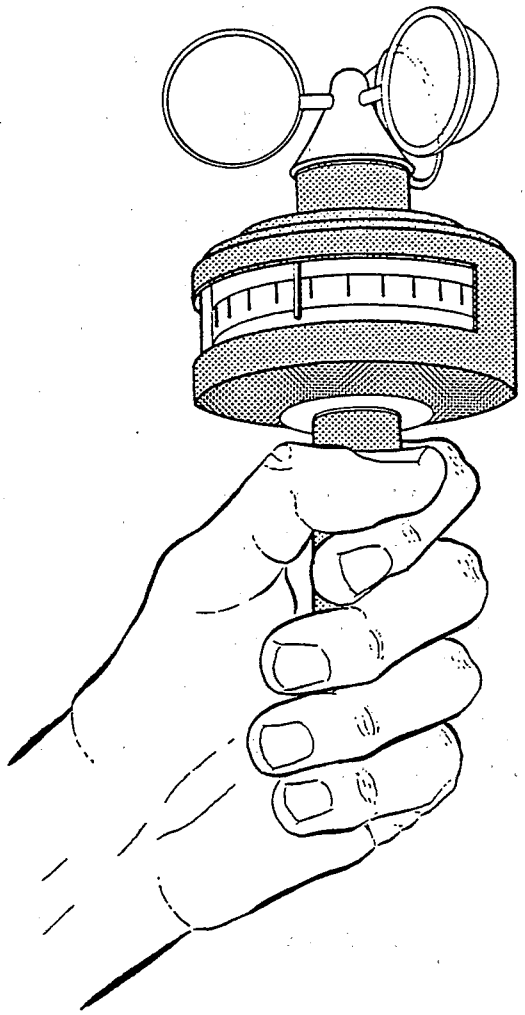

Figure 8.2.3 Portable hand cup anemometer for measuring windspeed (Cameron et al., 1966).

8.2 OTHER HYDROMETEOROLOGICAL DATA

8.2.4 Wind Direction

Other Names Used to Describe Method: Wind cone/sleeve/sock, vanes (flat-plate, aerodynamic-shaped, splayed, bivanes).

Uses at Contaminated Sites: Assessing possible directions of air-borne contaminant transport and deposition.

Method Description: Wind direction can be determined visually by observing the direction of movement of any freely moving substance or object, such as smoke or ribbons attached to poles. **Wind cones** are made of a tapered fabric sleeve, which is shaped like a truncated cone and pivoted to a standard at its larger end. Various types of **wind vanes** also can serve as indicators of wind direction. A **flat-plate** vane is mounted on a horizontal shaft, which is attached to a vertical bearing shaft that is free to rotate (Figure 8.2.4). **Aerodynamic-shaped** vanes use an airfoil section instead of a flat plate, and are usually heavier than the flat plate type. **Splayed** vanes have two flat plates joined at a small angle at the end of the horizontal shaft, and react to small changes in the wind somewhat better than flat-plate or aerodynamic vanes. **Bivanes** consist of two light-weight airfoil sections mounted orthogonally on the end of a counter-balanced rod, which is free to rotate in the horizontal and vertical planes and is used in turbulence studies to record horizontal and vertical components of wind. **Wind roses** can be developed from manual recording of wind direction at specified intervals or automatic recorders attached to wind vanes. The frequency with which the wind blows in various directions can be useful information in designing soil sampling plans where a point source has released contaminants to the air that have been deposited at downwind locations.

Method Selection Considerations: Some kind of wind direction indicator should be used any time site activities could result in release of contaminants to the air.

Frequency of Use: Commonly used for health and safety purposes; less common for obtaining hydrometeorological applications.

Standard Methods/Guidelines: ASTM (1985a).

Sources for Additional Information: Hardy and Fisher (1972-Chapter 3), Lockhart (1989a), Meteorological Office (1956-Chapter 5), National Weather Service (1975-Chapter A10), Spilhaus and Middleton (1973-Chapter 6), Thompson et al. (1989), U.S. EPA (1987a,b), U.S. Geological Survey (1980). See also, Table 8-2.

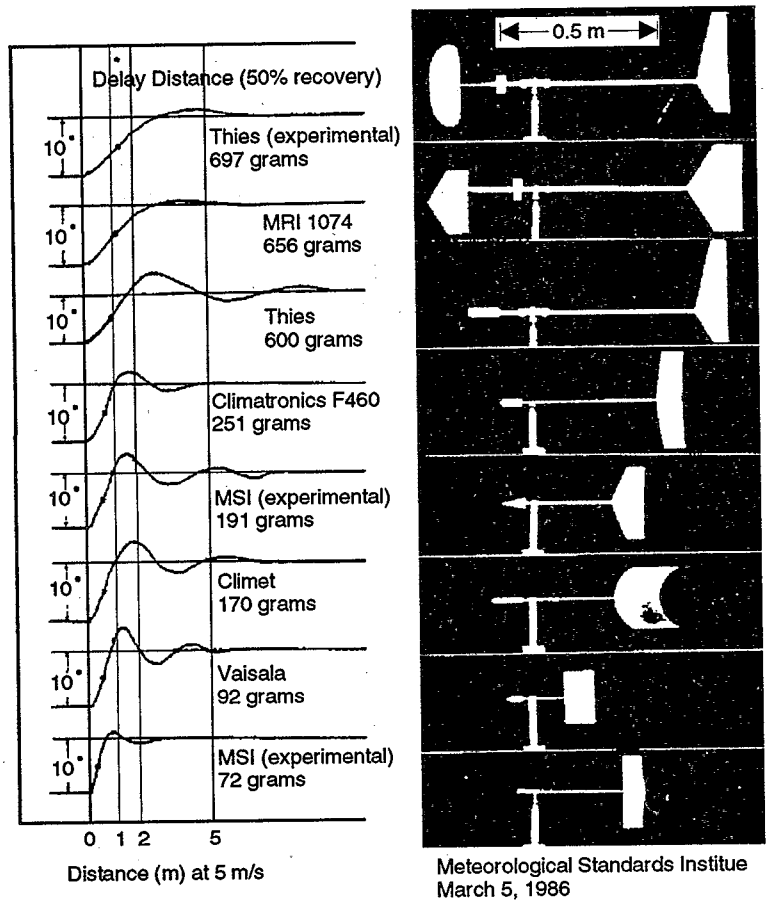

Figure 8.2.4 Sample of dynamic response of some wind vanes (Lockhart, 1989a).

8.2.5 Atmospheric Pressure

Other Names Used to Describe Method: Mercury barometers (Fortin-type, fixed-cistern type), aneroid barometer, altimeter.

Uses at Contaminated Sites: Interpreting ground-water level measurements; required for several methods of measuring or estimating evapotranspiration using micrometeorological method (Section 8.4); required for calculations involving humidity measurement (Sections 8.1.3 and 8.1.4); estimating altitude in remote locations.

Method Description: There are two major types of instruments for measuring atmospheric pressure. **Mercury barometers** use changes in the level of mercury in a container to measure changes in atmospheric pressure. The **Fortin-type mercury barometer** is used by the National Weather Service as the official station pressure instrument. A cistern containing mercury has a pointer made of noncorrodible materials, such as ivory or stainless steel, projected down from the roof. The level of mercury within the cistern is raised or lowered by turning a thumb screw beneath the cistern, until it just touches the tip of the pointer (called the ivory point, index point, or zero point). Pressure is read from mercury in a graduated column connected to the cistern that can be read to a thousandth of an inch or a tenth of a millibar with a vernier on the scale. **Aneroid barometers** measure pressure by the response of a capsule that is practically evacuated of gas. The response can be measured either by deflection of a spring connected to the cell, by the change in curvature of a Bourdon tube, or by a change in natural resonant frequency. The barometer must be temperature compensated at a given pressure level by adjusting the residual gas in the aneroid or by a bimetallic-link arrangement. **Altimeters** are aneroid barometers that have a pointer and a dial calibrated for elevation or pressure readings (Figure 8.2.5). **Precision aneroids** can be of the direct-reading kind, similar to altimeters, but are designed for more accurate measurements. A relatively recent development is the accurate digital-readout precision aneroids, which use electronic indicators rather than mechanical linkages. Sensor types used in these instruments can be a fused quartz Bourdon tube (**quartz barometer**), an aneroid capsule with which the natural frequency as related to pressure is measured (**vibrating diaphragm barometer**), or the conventional aneroid capsule in which spring deflection is measured.

Method Selection Considerations: **Fortin barometers** are very accurate (can be read to a thousandth of an inch), but require permanent installation. **Aneroid barometers** have the main advantage of being portable. Disadvantages include requirements for periodic calibration against mercury barometers, and the requirement for temperature compensation.

Frequency of Use: Not commonly used at contaminated sites.

Standard Methods/Guidelines: ASTM (1984c).

Sources for Additional Information: Brock and Nicolaidis (1984), Lockhart (1989a), U.S. Geological Survey (1980), U.S. Weather Bureau (1963b), National Weather Service (1975-Chapter 8), WMO (1971).

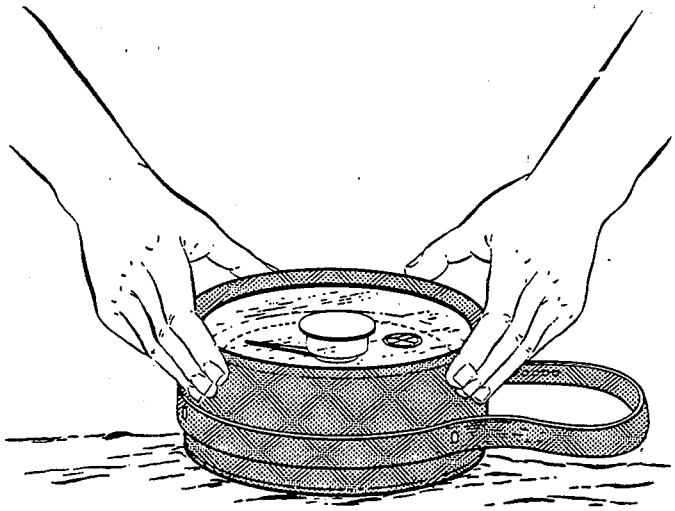

Figure 8.2.5 Rugged precision altimeter for measurement of elevation (Cameron et al., 1966).

8.2.6 Solar Radiation (Pyranometers)

Other Names Used to Describe Methods: Thermopile, photovoltaic, bimetallic (Robitzsch-type, actinograph), thermo-electric pyranometers, incident solar radiation meter, solarimeter.

Uses at Contaminated Sites: Global radiation data are needed for some empirical and physically-based equations for estimation of evaporation and evapotranspiration (Sections 8.4.1 and 8.4.2).

Device Description: A **pyranometer** measures global **solar** radiation (direct plus diffuse radiation falling on a horizontal surface, see Figure 8.2.6a), and is the most commonly measured type of radiation. It does not measure terrestrial or atmospheric radiation. Most pyranometers incorporate a sensor that responds to the temperature difference caused by differential absorption of radiation of a black surface and a white surface (Figure 8.2.6b). The most commonly used temperature sensor is a **thermopile**, but **bimetallic** sensors also can be used. **Photovoltaic** pyranometers use silicon cells that respond to solar radiation by generating an electric current, which is proportional to the amount energy hitting the cell. WMO (1971) has established criteria for classification of pyranometers according to physical response characteristics, with 1st class being the most sensitive and 3rd class being the least sensitive. A **net pyranometer** measures the net upward and downward solar radiation flux through a horizontal surface. A **spherical** pyranometer measures solar radiation on a spherical surface.

Device Selection Considerations: **Thermopile Advantages:** (1) A variety of instruments of this type have been developed and are commercially available; (2) are the most accurate and responsive of available instruments (most are 1st or 2nd class); (3) the thermopile pyranometer is the standard instrument to use if direct measurements are required; and (4) can be readily configured for output to an electronic recording device. **Bimetallic Advantages:** (1) Are simple; (2) can be attached to a chart recorder for continuous recording; and (3) are suitable for measurements in which daily or longer interval data are acceptable. **Bimetallic Disadvantages:** (1) Are relatively inaccurate (3rd class) compared to thermopile pyranometers; (2) have relatively slow response time; and (3) require use of temperature-correction factor or some temperature compensation mechanism. **Photovoltaic Advantages:** (1) Are simple and inexpensive; (2) have a nearly instantaneous response; (3) have high current output, which can be used for automatic data recording; and (4) use can be acceptable as long as integration periods are 1 day or longer. **Photovoltaic Disadvantages:** Least accurate of available methods due to variations in sensitivity to different wavelengths.

Frequency of Use: Rare. Often estimated from nearby meteorologic station or from charts or maps.

Standard Methods/Guidelines: --

Sources for Additional Information: Brock and Nicolaidis (1984), Carter et al. (1977), Coulson (1975), Latimer (1972), Lockhart (1989a), Monteith (1972), Norris (1974), Selcuk and Yellott (1962), Thompson et al. (1989), U.S. Army (1975), U.S. Geological Survey (1980), WMO (1971). See also, Table 8-2.

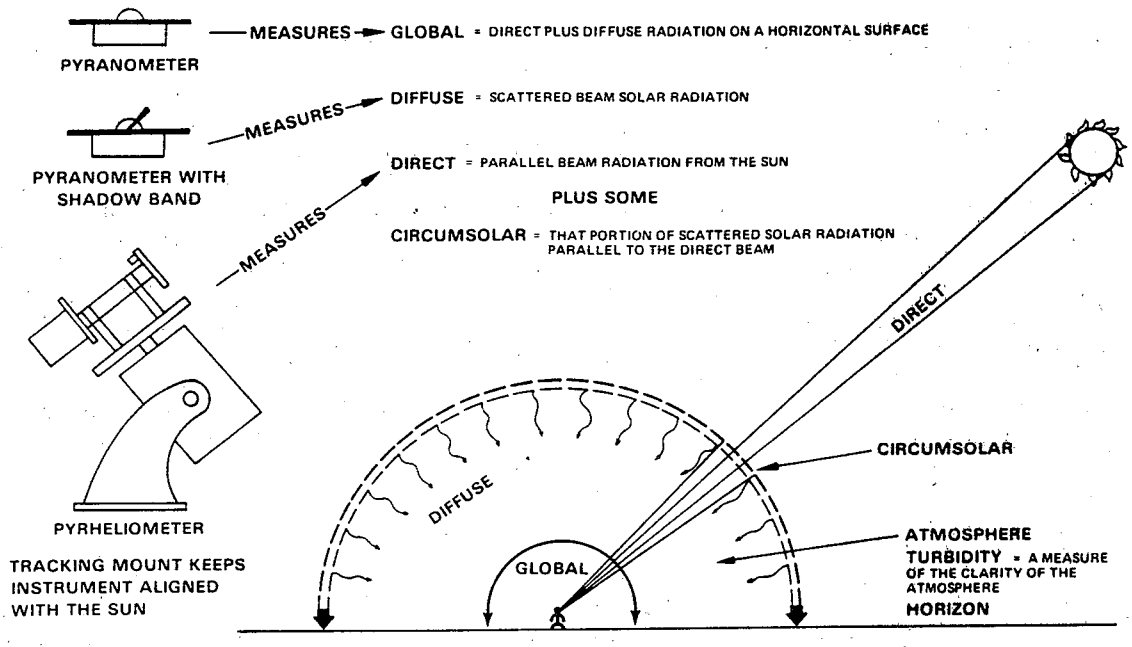

(a)

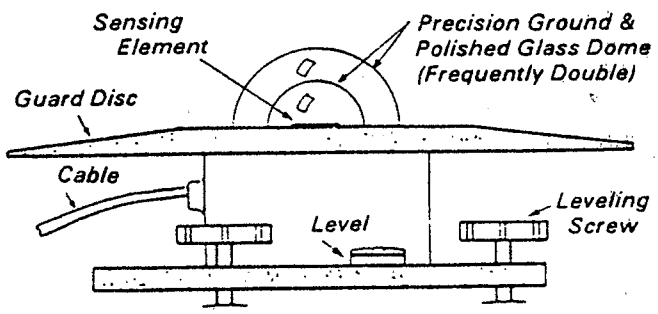

(b)

Figure 8.2.6 **Measurement of solar radiation: (a) Kinds of insolation and types of measuring instruments (U.S. Geological Survey, 1980); (b) Features of a typical pyranometer (Carter et al., 1977).**

8.2.7 Solar Radiation (Other Radiometers)

Other Names Used to Describe Method: Net radiometer/pyrradiometer, pyrheliometer (Angstrom electrical compensating, silver-disk, absolute, operational)

Uses at Contaminated Sites: Measuring net radiation flux for energy budget measurements of evapotranspiration (Section 8.4.4).

Method Description: Other radiometers measure different types of radiation. **Pyrradiometers** measure total radiation falling on a horizontal surface (combined solar, atmospheric and terrestrial radiation), and are similar in design to pyranometers (Section 8.2.6). **Net pyrradiometers** or **radiometers** are designed to measure the difference between downward and upward total radiation. Most commercially available net radiometers are made with a small disc-shaped thermopile covered by polyethylene hemispheres. **Pyrheliometers** measure the intensity of direct solar radiation and normal incidence, and are mounted in trackers that keep the devices pointed toward the sun as the traverses from east to west (Figure 8.2.6a and 8.2.7).

Method Selection Considerations: Unlikely to be used unless an energy budget method for computing evapotranspiration is used.

Frequency of Use: Uncommon for site characterization. Net radiometers are sometimes used in air-pollution related programs.

Standard Methods/Guidelines: ASTM (1984b).

Sources for Additional Information: Brock and Nicolaidis (1984), Carter et al. (1977), Coulson (1975), Latimer (1972), Lockhart (1989a), Monteith (1972), Norris (1974), Selcuk and Yellott (1962), Thompson et al. (1989), U.S. Army (1975), U.S. Geological Survey (1980), WMO (1971). See also, Table 8-2.

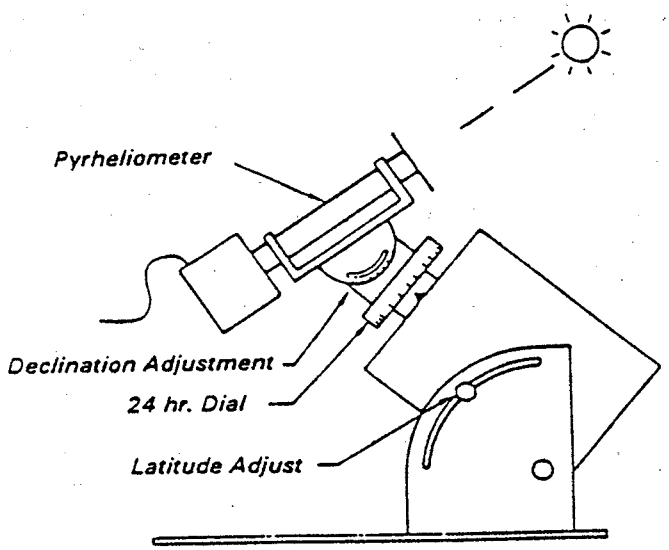

Figure 8.2.7 Features of a typical pyrheliometer and tracking mount (Carter et al., 1977).

8. VADOSE ZONE WATER BUDGET CHARACTERIZATION METHODS

8.3 EVAPOTRANSPIRATION (WATER BALANCE METHODS)

8.3.1 Lysimeters

Other Names Used to Describe Method: Pan/filled-in lysimeters (nonweighable, weighing, hydraulic/floating), monolith/soil block lysimeter, monolith/soil block evapotranspirimeter, microlysimeter.

Uses at Contaminated Sites: Measuring evaporation from vegetated soil (pan lysimeter) or unvegetated soil (microlysimeter), in order to separate out the transpiration component of evapotranspiration (ET).

Method/Device Description: A **lysimeter** consists of a block os soil, usually planted with some vegetation that is enclosed in a container, which isolates the lysimeter hydrologically from its surroundings. Lysimeters used for sampling soil solutions are discussed in Section 9.3.1 (Free-Drainage Samplers). There are three main types of **filled-in lysimeters**, in which disturbed soil is used for measuring ET: (1) **Nonweighing lysimeters** (Figure 8.3.1a); (2) **hydraulic** or **floating lysimeters**, which rest on rubber bags or other water-filled tubing or bolsters that allow recording of changes in pressure in response to changes in weight (Figure 8.3.1b); and (3) **weighing lysimeters**, in which changes in moisture contents are measured by changes in the weight of the soil block (Figure 8.3.1c). A typical **pan lysimeter** is 1 meter in diameter (range from 0.1 to 10 square meters) and range from 0.5 to 3 meters deep. Soil and vegetation representative of the area are placed in the lysimeter with the surface level the same as the surrounding soil. **Monolith lysimeters** are constructed of undisturbed soil. In nonweighing lysimeters, changes in soil moisture are determined by various soil moisture determination methods, such as neutron-moisture logging, gamma-ray transmission, electrical resistance blocks, or tensiometers (see Section 6.3). Weighing and hydraulic lysimeters measure changes in moisture content by recording changes in the total weight of the lysimeter over time with a sensitive scale or transducer. Most lysimeters record ET over relatively large areas. An exception is the **microlysimeter**, where a thin-walled cylinder is pushed into the soil, the sample is removed, sealed at the bottom, and weighed. The sample is replaced in the original hole to subject it to the same evaporative conditions as the soil, and is removed periodically for reweighing (Figure 8.3.1d).

Method Device Selection Considerations: **Pan Lysimeter Advantages:** (1) Probably are the most accurate of the water balance methods; (2) allow measurement of ET from a medium or large area; and (3) cost is moderate to low. **Pan Lysimeter Disadvantages:** (1) Are relatively complicated to install; and (2) must be surrounded by a considerable area of the same vegetation to avoid horizontal diversion in energy for ET. **Microlysimeter Advantages:** (1) Measure evaporation under a wide range of soil moisture conditions; and (2) are inexpensive and easy to use. **Microlysimeter Disadvantages:** Have small areal coverage.

Frequency of Use: Lysimeters are a commonly used method, if field measurement of ET is required.

Standard Methods/Guidelines: **Pan lysimeter:** Aboukhaled et al. (1982); **Microlysimeter:** Boast (1986).

Sources for Additional Information: Dunne and Leopold (1978), Sharma (1985), Thompson et al. (1989), U.S. Geological Survey (1982), Veihmeyer (1964). See also, Table 8-3.

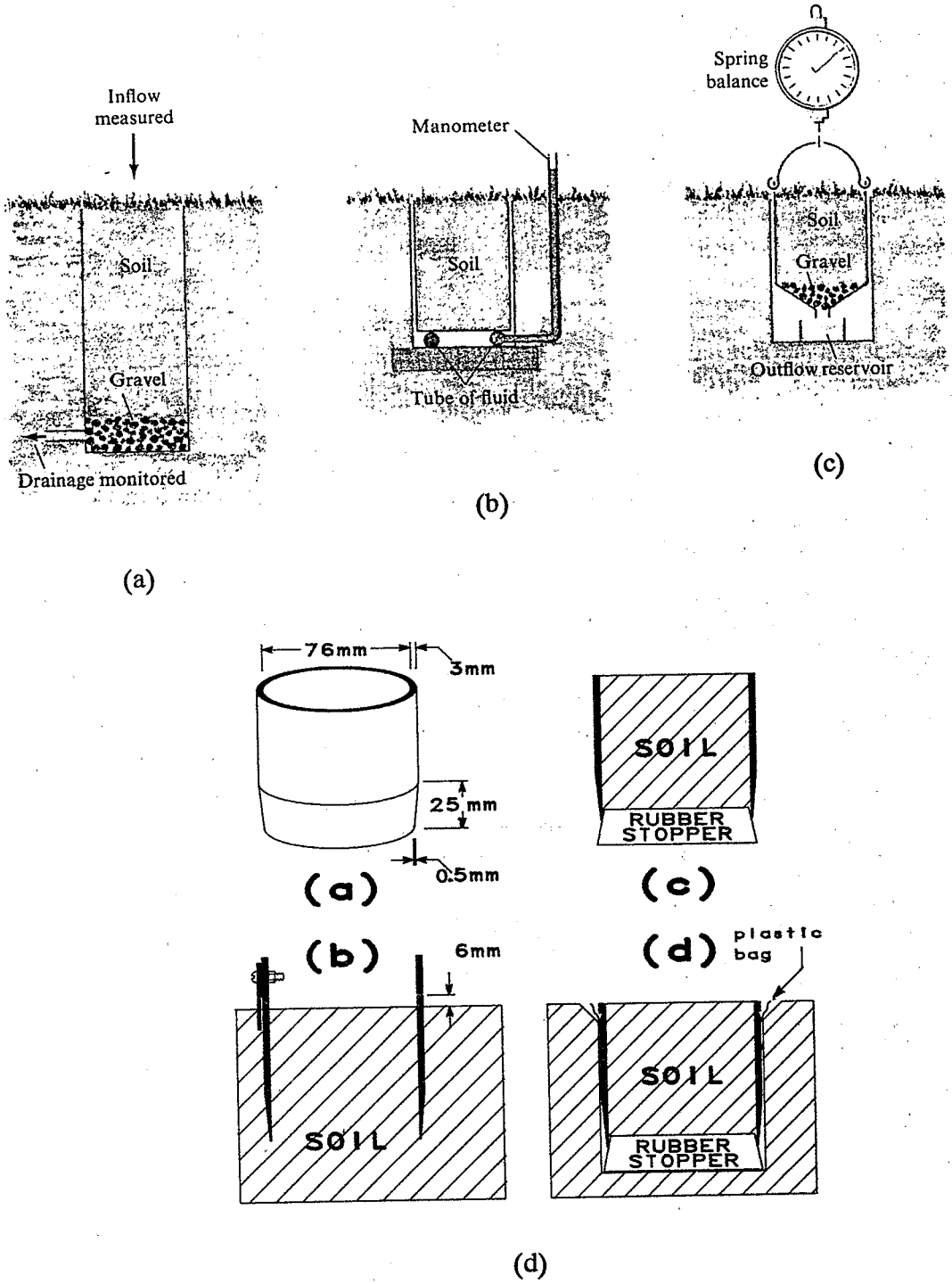

Figure 8.3.1 **Lysimetric methods: (a) Nonweighing, drainage type; (b) Weighing float type; (c) Spring-balance weighing type (Dunne and Leopold, 1978, from: *Water in Environmental Planning* by Dunne and Leopold, Copyright © 1978 by W.H. Freeman and Company, reprinted with permission); (d) Procedure for microlysimeter determination of evaporation (Boast, 1986, after Boast and Robertson, 1982, by permission).**

8.3 EVAPOTRANSPIRATION (WATER BALANCE METHODS)

8.3.2 Soil Moisture Budget

Other Names Used to Describe Method: --

Uses at Contaminated Sites: Measuring evapotranspiration (ET).

Method Description: Soil moisture content is measured over the entire root zone using one or more methods described in Section 6.3, before and after irrigation events. Assuming that irrigation brings the soil to field capacity, the initial moisture content after irrigation will be the available water capacity of the root zone. The evapotranspiration rate is the difference in moisture content between the two sampling periods divided by the time interval.

Method Selection Considerations: **Advantages:** Relatively simple method with the added advantage that soil moisture monitoring is often required for other objectives (see Section 6). **Disadvantages:** (1) Requires uniform soil type and texture and a water table deep enough that it does not influence the soil root zone; (2) precipitation events will disrupt the method; and (3) calculation of ET requires adjustments (modulation) to account for the fact that ET rates might change as soil moisture decreases.*

Frequency of Use: Probably the oldest and most commonly used method for determining ET.

Standard Methods/Guidelines: --

Sources for Additional Information: Thompson et al. (1989), U.S. Geological Survey (1982), Veihmeyer (1964). See also, Table 8-3.

*There is not universal agreement on the need for such corrections (see, for example, Veihmeyer and Hendrickson, 1955), although Gray (1973) reviews some of the literature on this question and recommends that "modulated" values of ET be used when doing soil moisture budget calculations. See also, references identified in Table 8-3.

8.3 EVAPOTRANSPIRATION (WATER BALANCE METHODS)

8.3.3 Water Budget Methods

Other Names Used to Describe Method: River basin water balance, inflow-outflow measurement, integration method.

Uses at Contaminated Sites: Estimating evaporation and evapotranspiration (ET).

Method Description: **Inflow-outflow method:** All inflows (precipitation), outflows (surface runoff, ground water leaving basin), and changes in storage in a watershed, are measured or estimated except for ET. ET is calculated using a water-balance equation. Figure 8.3.3 illustrates the components of the water balance equation. Figure 8.4.1 compares evaporation from a lake in Canada, which was computed using a water budget, to six other methods. **Integration method:** Evaporation and ET for an area is calculated by the summation of the products of ET for each crop times its area, plus the ET of natural vegetation times its areas, plus water-surface evaporation times its surface areas, plus evaporation from bare land times its areas. This method requires knowledge of unit ET and the areas of various classes of agricultural crops, natural vegetation, bare land, and water surfaces. Often this can be done using sequential remote sensing data (satellite, airphotos) to identify crop/vegetation patterns (see Raymond and Rezin, 1989, for a recent example of this approach).

Method Selection Considerations: **Advantages:** Water budget methods can be manageable to difficult, with moderate to low cost. **Disadvantages:** (1) Small errors in measuring or estimating various components of the water-balance equation (such as deep percolation) can cumulatively result in a large error in the calculated ET value; (2) suitable for application to a specific site only if ET at the site can be assumed to be close to the average ET for the watershed or area of interest; and (3) use of water budgets to calculate evaporation from lakes is not recommended for time periods of less than 1 month in duration if the estimate is expected to be within plus or minus 5 percent of the actual amount (Gray, 1973).

Frequency of Use: Commonly used in hydrologic studies; rarely used at the site-specific level.

Standard Methods/Guidelines: --

Sources for Additional Information: Bras (1990), Dunne and Leopold (1978), Rosenberg et al. (1983), Sharma (1985), Thompson et al. (1989), U.S. Geological Survey (1982), Veihmeyer (1964). See also, Table 8-3.

$$P = I + AET + OF + \Delta SM + \Delta GWS + GWR$$

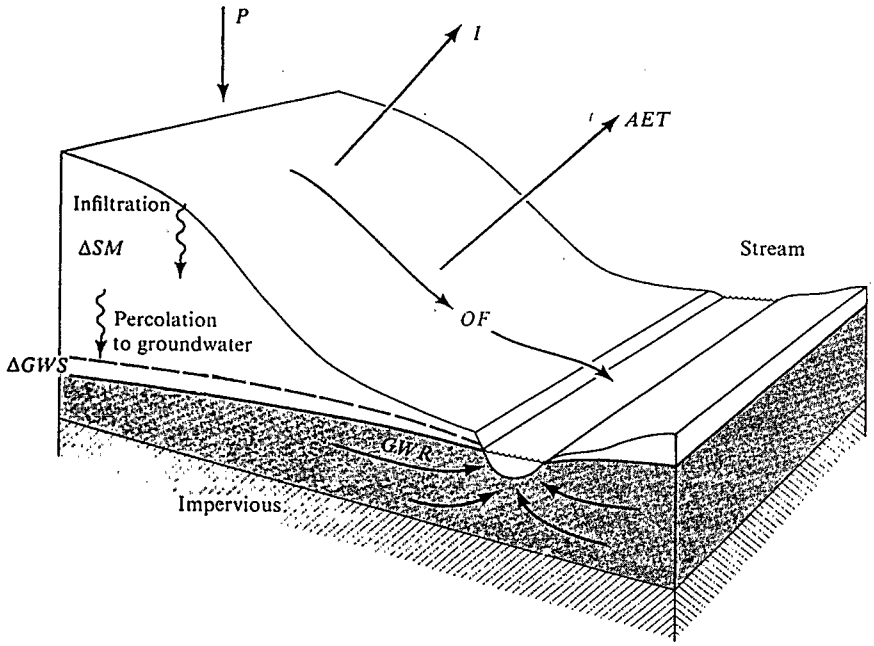

Figure 8.3.3 **Water balance equation and schematic diagram for a hillside or a small catchment (Dunne and Leopold, 1978). P = precipitation; I = interception; AET = actual evapotranspiration; OF = overland flow; ΔSM = change in soil moisture; ΔGWS = change in ground-water storage; GWR = ground-water outflow. Solving for ET requires measurement or estimation of other elements in the equation.**

8.3 EVAPOTRANSPIRATION (WATER BALANCE METHODS)

8.3.4 Evaporation Pans

Other Names Used to Describe Method: Class A land pan, U.S Bureau of Plant Industry sunken pan, Colorado sunken pan, U.S. Geological Survey floating pan, insulated evaporation pan.

Uses at Contaminated Sites: Estimating of evaporation from water impoundment surfaces; can also be used to indirectly estimate potential evapotranspiration (ET) (Veihmeyer, 1964).

Method Description: The standard U.S. Weather Service **Class A pan** is built of unpainted galvanized iron. It is 4 feet in diameter, 10 inches deeps, and mounted 12 inches above the ground on a wooden frame (Figure 8.3.4a). The rate of evaporation of water from the pan is measured. Precipitation also must be measured to correct for additions to the pan. A pan coefficient is used (generally from .70 to .75) for large bodies of water, to estimate actual evaporation from the water body of interest (Figure 8.4.1 illustrates the tendency of Class-A pans to overestimate actual evaporation). The **insulated evaporation pan** is constructed of fiberglass with 8 centimeters of freon-blown polyethylene (Figure 8.3.4b). The insulation reduces effects of climate and season on variability of coefficients used to calculate actual evaporation. Other commonly used types of evaporation pans include the U.S. Bureau of Plant Industry sunken pan, Colorado sunken pan, and U.S. Geological Survey floating pan.

Method Selection Considerations: **Advantages:** (1) The Class A pan is the standard method for measuring evaporation; (2) data on pan evaporation for the vicinity of a site in question might be published or available; and (3) insulated pans allow use of standard coefficients. **Disadvantages:** (1) Several years of data are required to characterize seasonal and annual variations in evaporation; (2) use of incorrect pan coefficient can bias results; (3) coefficients measured using noninsulated evaporation pans can vary with location, climate, or season; (4) cannot be used when temperature is below freezing; and (5) sunken pans are difficult to install and maintain, they tend to collect trash, leaks are hard to detect, and it is difficult to evaluate heat loss from the pan to the surround soil. **Floating pans** probably give the best estimates of lake evaporation (see Figure 8.4.1), but are not widely used due to operational difficulties (inaccessibility and water splashing into or out of the pan).

Frequency of Use: Uncommon for site specific field measurement. Other methods usually are available for estimating evaporation. Pan evaporation data are commonly used to estimate potential ET.

Standard Methods/Guidelines: **Class A pan:** National Weather Service (1972). **Insulated pan:** U.S. Geological Survey (1982).

Sources for Additional Information: Dunne and Leopold (1978), Thompson et al. (1989), U.S. Geological Survey (1982), Veihmeyer (1964). See also, Table 8-3.

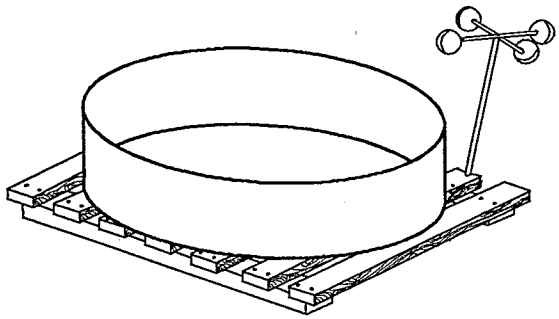

(a)

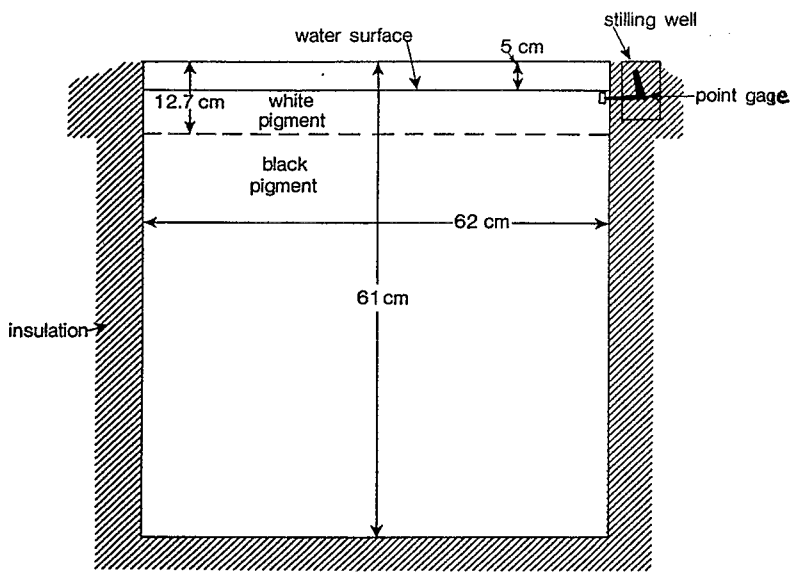

(b)

Figure 8.3.4 Evaporation Pans: (a) U.S. Weather Bureau Class A land pan (after Veihmeyer, 1964); (b) Cross section of National Weather Service insulated evaporation pan (U.S. Geological Survey, 1982).

8.3.5 Evaporimeters and Atmometers

Other Names Used to Describe Method: First-stage evaporimeter; Piche/Bellani/Livingston/Wilde atmometer.

Uses at Contaminated Sites: **Evaporimeter:** Measuring evaporation from unvegetated soil; **Atmometers:** Measuring latent evaporation (mainly a measure of the drying power of the air).

Method/Device Description: **Evaporimeter:** A flat, soil-covered tray 0.1 meters in area is connected to a constant suction water supply (Figure 8.3.5a). The rate of water loss from the water supply equals the evaporation rate. **Atmometer:** A water-filled glass tube that has an open end through which water evaporates from a filter paper (**Piche** type) or porous plate (**Bellani** type, Figure 8.3.5b). The tube supplying water is graduated to read evaporation in millimeters. Atmometer measurements require different conversion factors related to evaporation rate and location to estimate evaporation from water bodies.

Method Selection Considerations: **Evaporimeter Advantages:** Are relatively simple and easy to use. **Evaporimeter Disadvantages:** (1) Only measure evaporation during the stage when evaporation equals potential evaporation; and (2) have small areal coverage. **Atmometer Advantages:** (1) Are inexpensive; (2) are portable and easily maintained and installed; (3) are representative of conditions affecting moisture loss from plants; and (4) require a small amount of water to operate. **Atmometer Disadvantages** (1) Value for estimating evaporation loss from water bodies is questionable because they are more responsive to windspeed than radiant energy; (2) observations are difficult to interpret; (3) Class-A pans are better for estimating evaporation from lakes; and (4) cannot be used when temperature is below freezing.

Frequency of Use: **Evaporimeters:** Uncommon. Generally measurement or estimates of total evapotranspiration will meet the requirements for most water budget calculations. **Atmometers** commonly are used in agricultural studies but their use has not been reported at contaminated sites.

Standard Methods/Guidelines: --

Sources for Additional Information: **Evaporimeters:** Adams et al. (1976), Arkin et al. (1974), Boast (1986). **Atmometers:** U.S. Geological Survey (1982), Veihmeyer (1964). See also, Table 8-3.

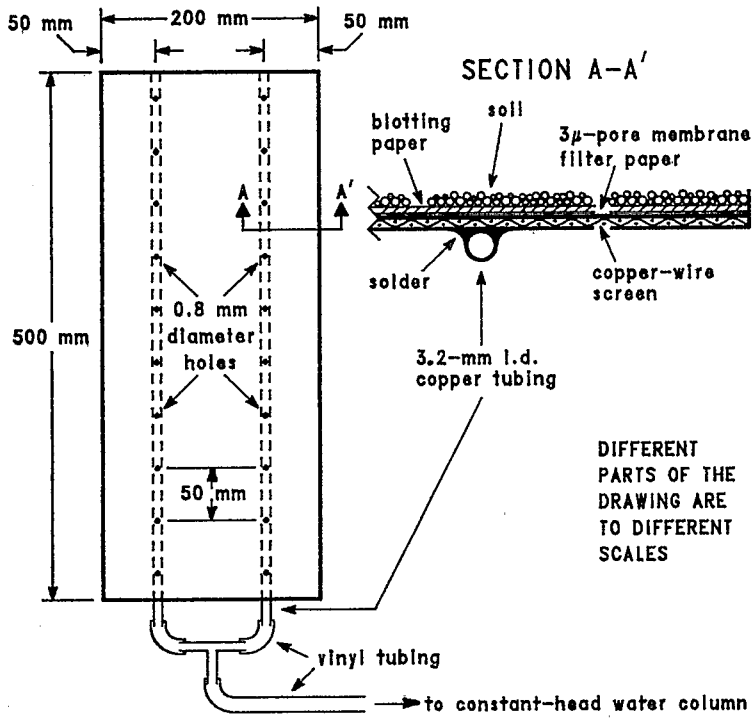

(a)

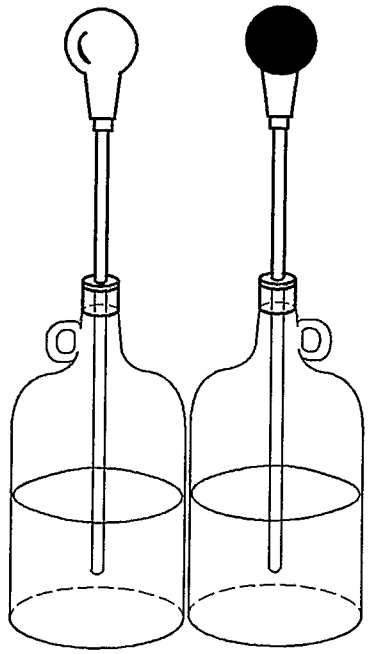

(b)

Figure 8.3.5 **Evaporation measurement instruments: (a) Top view and cross section of the first-stage evaporimeter tray (Boast, 1986, after Arkin et al., 1974, by permission); (b) Set of black-and-white Livingston atmometers (after Veihmeyer, 1964).**

8.3.6 Chloride Tracer

Other Names Used to Describe Method: --

Uses at Contaminated Sites: Indirectly estimating evapotranspiration (ET).

Method Description: The chloride content of precipitation and shallow ground water samples is measured at intervals to obtain average chloride concentrations of the precipitation and ground water. Annual ET is calculated by multiplying the ratio of chloride concentration in precipitation to chloride in ground-water times the long-term average precipitation.

Method Selection Considerations: The following site conditions need to apply if this method is to be used: (1) There is a shallow water table; (2) chloride in the ground water comes only from precipitation; and (3) runoff is negligible. Laboratory analysis of samples is required and collection of precipitation samples results in moderate to high cost.

Frequency of Use: Uncommon.

Standard Methods/Guidelines: --

Sources for Additional Information: Sharma (1985), Thompson et al. (1989).

8.3.7 Ground-Water Fluctuation

Other Names Used to Describe Method: --

Uses at Contaminated Sites: Indirectly estimating evapotranspiration (ET).

Method Description: Aquifer storage values are measured or estimated, and continuous measurement of water-level fluctuations are continuously measured or measurements are taken at sufficiently close intervals to plot diurnal fluctuations in ground-water level (Figure 8.3.7). Estimation of average ET rates requires continuing measurements over months. A variant of this approach in floodplain areas is to analyze diurnal fluctuations in stream hydrographs to estimate daily ET rates (Reigner, 1966), or based flow recession curves for monthly estimates of ET (Langbein, 1942).

Method Selection Considerations: This method requires; (1) A shallow water-table, (2) uniform coarse or medium soil texture that results in measurable, diurnal fluctuations in water table in response to ET, and (3) limited precipitation unless precipitation is accurately measured as well. Where conditions are suitable, the cost is moderate to low.

Frequency of Use: Uncommon.

Standard Methods/Guidelines: Davis and DeWiest (1966).

Sources for Additional Information: Thompson et al. (1989), U.S. Geological Survey (1982), Veihmeyer (1964). See also, Table 8-3.

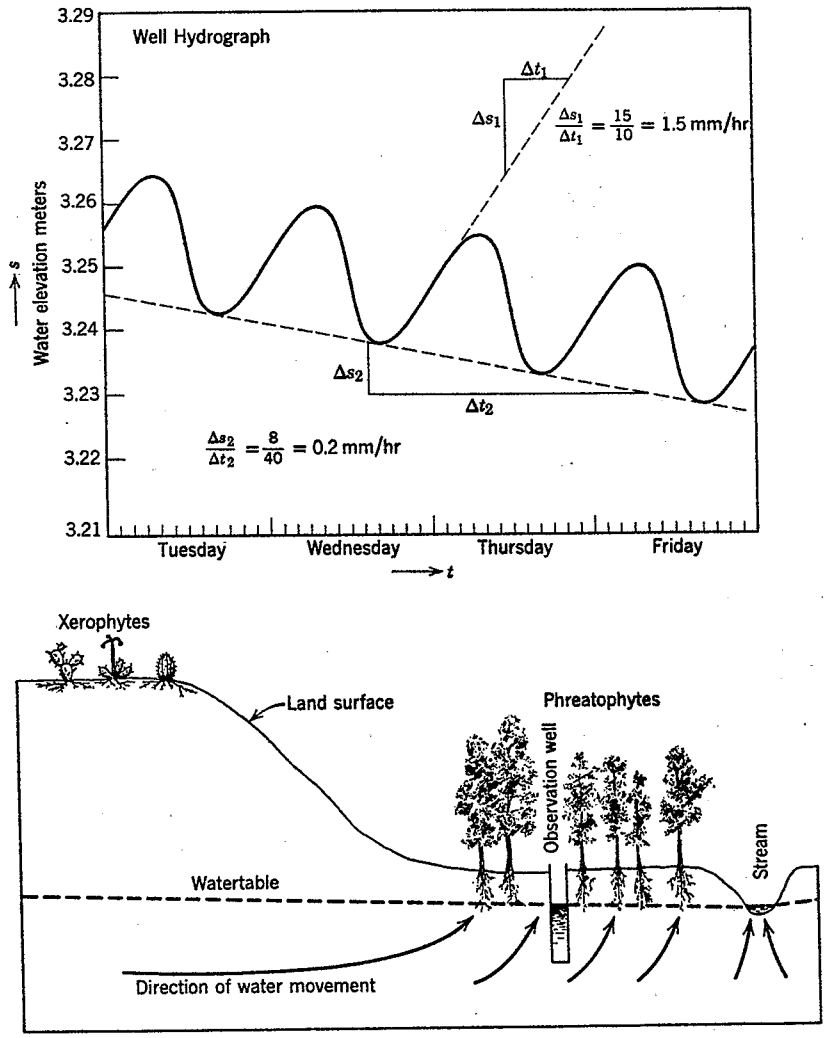

Figure 8.3.7 **Estimation of evapotranspiration by phreatophytes from daily water-level fluctuations in a water well (Davis and DeWiest, 1966, reprinted by permission of John Wiley & Sons, Inc. from *Hydrogeology* by S.N. Davis and R.J.M. DeWiest, Copyright © 1966).**

8.3.8 Other Transpiration Methods

Other Names Used to Describe Method: Enclosures, physico-biological methods, heat-pulse method, radioisotopes.

Uses at Contaminated Sites: Directly or indirectly measuring the transpiration component of evapotranspiration is not likely to be required.

Method Description: The transpiration component of evapotranspiration can be measured or estimated by a number of the methods discussed elsewhere in this section: Lysimeters (Section 8.3.1, considered one of the best approach), soil moisture depletion (Section 8.3.2), mass transfer methods (Section 8.4.3), and energy balance methods (Section 8.4.4). Other field methods for indirect estimation of transpiration include: (1) **Enclosures**, in which changes in air moisture resulting from transpiration are measured; (2) **heat-pulse** methods, where plants with woody stems are heated quickly and the rate of ascent of the heated sap is timed; and (3) injecting **radioisotopes** into trees and tracing their movement through the plant (see Section 4.4.5 for additional information on radioisotope tracers). Methods for direct measurement of transpiration (such as the use of phytometers, photometers, porometers, thermocouple psychrometry, and corona analysis) is generally are done in the laboratory.

Method Selection Considerations: If transpiration needs to be estimated, lysimeter or soil moisture depletion methods probably are the best for use with water budget studies.

Frequency of Use: Rare.

Standard Methods/Guidelines: --

Sources for Additional Information: See Table 8-3.

8.4 EVAPOTRANSPIRATION (MICROMETEOROLOGICAL METHODS)

8.4.1 Empirical Equations

Other Names Used to Describe Method: Equations are often identified by the names of individuals who developed the equation.

Uses at Contaminated Sites: Estimating evaporation and evapotranspiration (ET).

Method Description: **Evapotranspiration:** Numerous empirical equations have been developed that allow estimation of **potential evapotranspiration (PET)** using climatic data, which can be available from nearby weather stations or charts and maps. Once PET is known, empirical factors based primarily on the type of vegetation are used to estimate **actual evapotranspiration (AET).** Three of the most commonly used empirical methods are described here. **Thornthwaite:** This equation requires data on mean monthly air temperature. Latitude, month, and average monthly daylight are required to determine adjustment factors to take into account the total numbers of days and hours available for ET. The main advantage of this equation is that it allows general estimates in areas where climatic records and ET data are limited. **Blaney-Criddle:** This equation requires mean monthly temperature, monthly percentage of daylight hours per year, and an empirical coefficient for the month, which depends on the crop. A modified equation accounts for changes in the sun's zenith angle to correct for reduced power of the sun's rays during winter, allowing use of a single empirical coefficient for crop/vegetation type. **Jensen-Haise:** This equation requires mean air temperature, solar radiation, and the saturated vapor pressures at the mean maximum and mean minimum temperature for the warmest month of the year. Numerous other empirical equations have been developed (Table 8.4.1 shows eight of these equations), but the above mentioned ones are the most commonly used equations. **Evaporation equations:** A number of empirical equations have been developed for estimating lake evaporation. Most are based on simple aerodynamic equations, which require measurement or estimation of: (1) Windspeed, (2) vapor pressure of saturated air at the temperature of the water surface, (3) actual vapor pressure of air at some height above the water surface, and (4) empirical constants appropriate to the type of water body. Table 8-3 identifies a number of references that review and present empirical evaporation equations. Figure 8.4.1 shows calculations of evaporation from a lake using three empirical formulas (Nordenson-Kohler-Fox, Lake Hefner "upwind formula," and Meyer formula) with four other methods (Class-A and floating pan, water budget, energy budget, and Penman formula). It is clear from this figure that empirical formulas can yield good results if the appropriate one is used, but can be very far off if the wrong formula is used.

Method Selection Considerations: **Evapotranspiration Equation Advantages:** (1) Is best for developing monthly, seasonal, or annual consumptive water use values; and (2) is very inexpensive if input data can be obtained from existing meteorological records. **Evapotranspiration Equation Disadvantages:** (1) Calculations might not be very accurate if site conditions are not typical of conditions upon which the equation is based (use of several equations and comparing the results can be useful for developing an estimated range); (2) should not be used to estimate short-term (hours to days) variations in ET because no allowance is made for variation in wind and relative humidity; and (3) equations tend to overestimate water use during vegetation emergence and underestimate water use for midseason, unless appropriate crop factors are used (such as Blaney-Criddle method). **Thornthwaite:** Works best in the central and eastern United States for sod with high moisture content in areas with limited advection; is inaccurate if short-term (less than one-month) data are used. **Blaney-Criddle:** Is widely used in the western United States; requires empirical coefficient for crop or vegetation type (already available for many crops and vegetation types). **Jensen-Haise:** Was developed for use with irrigated crops in the western United States. **Evaporation Equation Advantages:** Is very simple and allow estimates from standard meteorological data. **Evaporation Equation Disadvantages:** (1) Most equations of this type require measurement of the surface temperature of the body of water, which is difficult to obtain; (2) if mean air temperature is used instead, the failure to account for effects of advected energy to the lake on evaporation might cause considerable error because small errors in temperature induce large errors in the calculations; (3) measurement of wind speed and vapor pressure must be taken at heights specified in the equation; and (4) results will be inaccurate if the characteristics of the water body are not similar to the water body for which the empirical constants were developed.

Frequency of Use: All equations are commonly used. See method selection considerations for geographic limitations.

Table 8.4.1 Some Empirical and Physically-Based Evapotranspiration Equations

Name	Date	Period for U	Unit for U	Equation	
Hedke (Harding et al., 1930)	1930	Annual	Feet	$U = kH$	(11-20)
Lowry-Johnson (1942)	1942	Annual	Feet	$U = 0.000156H + 0.8$	(11-21)
Blaney-Morin (1942)	1942	m months	Inches	$U = k\sum_{1}^{m} pt(114-h)$	(11-22)
Thornthwaite and Wilm (1944)	1944	Monthly	Centimeters	$U = 1.6\left(\frac{10t}{TE}\right)^{a}$ where $a = 0.000000675(TE)^3 - 0.0000771(TE)^2 + 0.01792TE + 0.49239$	(11-23)
Penman (1948)	1948	Daily	Millimeters	$U = \frac{AH - 0.27E}{A - 0.27}$ where $E = 0.35(e_a - e_d)(1 + 0.0098w_2)$, $H = R(1 - r)(0.18 + 0.55S) - B(0.56 - 0.092e_d^{0.5})(0.10 + 0.90S)$	(11-24)
Blaney-Criddle (1950)	1950	m months	Inches	$U = k\sum_{1}^{m} pt = kF$ where $F = \sum_{1}^{m} pt$	(11-25)
Halkias-Veihmeyer-Hendrickson (1955)	1955	Monthly	Inches	$U = SD$	(11-27)
Hargreaves (1956)	1956	m months	Inches	$U = \sum_{1}^{m} kd(0.38 - 0.0038h)(t - 32)$	(11-26)

NOTATION

A = slope of saturated-vapor-pressure curve of air at absolute temperature in °F, or de_a/dt in mm Hg/°F (Fig. 11-8)
B = a coefficient depending on temperature (Table 11-7)
D = difference in evaporation between white and black atmometers in cm^3
d = monthly daytime coefficient dependent upon latitude (Table 11-9)
e_a = saturation vapor pressure at mean air temperature in mm Hg (Fig. 11-7)
e_d = saturation vapor pressure at mean dew point (i.e., actual vapor pressure in the air) in mm Hg, being equal to e_a multiplied by relative humidity in per cent
E = daily evaporation in mm
h = mean monthly relative humidity at noon, in Eq. (11-26), or annual mean relative humidity in per cent, in Eq. (11-22)
H = accumulated degree-days above minimum growing temperature for growing season, in Eq. (11-20); or accumulated degree-days of maximum daily temperature above 32°F for growing season, in Eq. (11-21); or daily heat budget at surface in mm of water, in Eq. (11-24)
k = annual, seasonal, or monthly consumptive-use coefficient
p = per cent of daytime hours of the year, occurring during the period, divided by 100 (Table 11-4)
r = estimated percentage of reflecting surface
R = mean monthly extraterrestrial radiation in mm of water evaporated per day (Table 11-6)
S = estimated ratio of actual duration of bright sunshine to maximum possible duration of bright sunshine; or slope of regression line between D and U in Eq. (11-27)
TE = Thornthwaite's *temperature-efficiency index*, being equal to the sum of 12 monthly values of *heat index* $i = (t/5)^{1.514}$, where t is mean monthly temperature in °C
t = mean monthly temperature in °F, in Eqs. (11-22), (11-25), and (11-26), or in °C in Eq. (11-23)
U = evapotranspiration or consumptive use for given period
w_2 = mean wind velocity at 2 m above the ground in miles/day, or equal to w_1 (log 6.6/log h), where w_1 is measured wind velocity in miles/day at height h in ft

Source: Veihmeyer (1964)

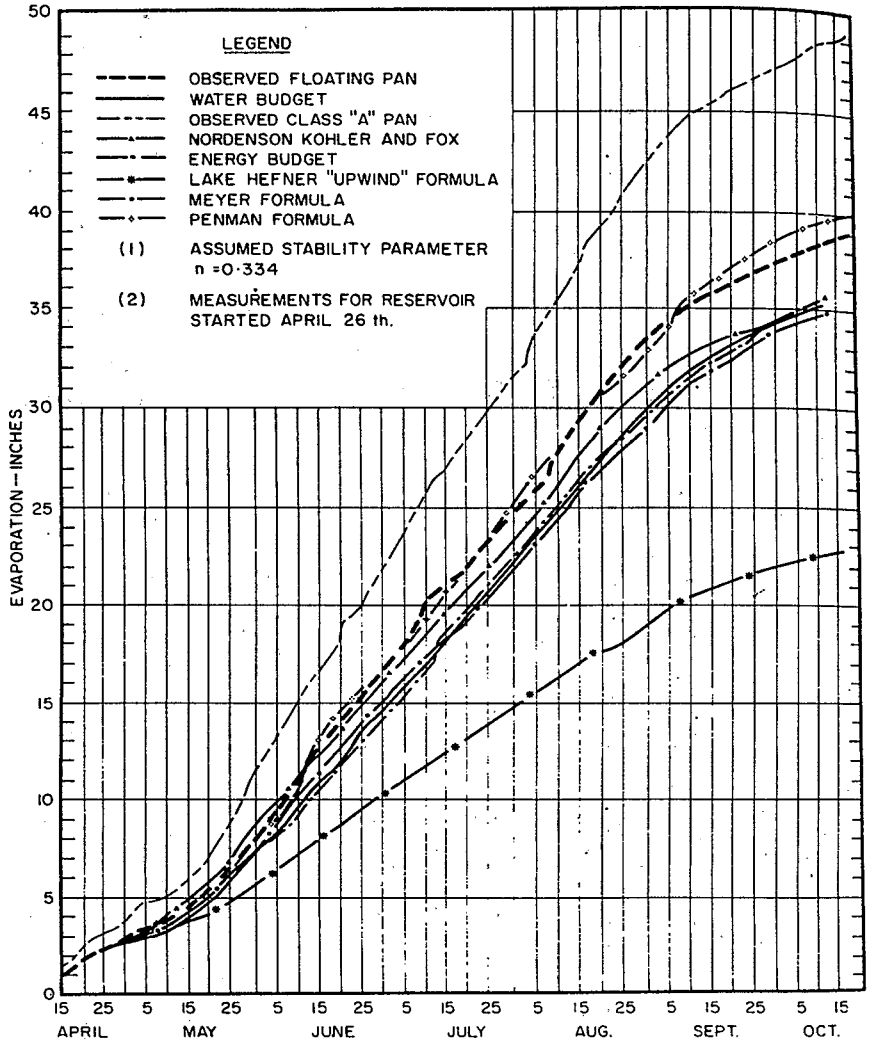

Figure 8.4.1 **Comparison of 1961 cumulative measured and computed evaporation for Weyburn reservoir, southern Saskatchewan, using eight methods (McKay and Stichling, 1961).**

Standard Methods/Guidelines: --

Sources for Additional Information: See Table 8-3.

8.4.2 Physically-Based Equations (Penman and Related Methods)

Other Names Used to Describe Method: Combination method, Penman (combination) equation, Penman-Monteith equation.

Uses at Contaminated Sites: Indirect field method for estimating evapotranspiration (ET).

Method Description: Physically-based process equations combine energy balance (Section 8.4.4) and aerodynamic transport of water vapor (Section 8.4.3) to calculate potential evapotranspiration (PET). Specific parameters that must be measured in the field vary slightly, depending on the equation, but can include: Surface temperature, surface resistance, saturation vapor pressure at mean air temperature, actual vapor pressure, mean monthly solar radiation, and wind velocity. Although these equations are physically-based, they require the measurement or estimation of various empirical constants. The **Penman** equation (Penman, 1948) was the first equation developed using this approach, and used weekly mean climatic data in empirically derived expressions for the energy and aerodynamic components. Figure 8.4.1 illustrates lake evaporation computed using the Penman formula compared to six other methods. Various modifications have been suggested since then, with the **Penman-Monteith** equation (which eliminated the need for surface temperature measurement) being the most commonly used. The theory of a complementary relationship between actual evapotranspiration (AET) and PET (Bouchet, 1963) has contributed to the further development of physically-based evaporation and ET models. In arid areas PET always exceeds AET, but as the amount of moisture available for removal from the soil increases, AET increases and PET decreases (because moisture in the air reduces the capacity for further additions of water vapor), until they converge on a value that is called **wet environment evapotranspiration (WET)**. The **Morton** or **Complementary Relationship Areal Evapotranspiration (CRAE)** model developed for calculating WET, replaces the wind function in the Penman equation with a vapor transfer coefficient. The **Brutsaert-Stricker**, or **Advection-Aridity Evaporation** model, has been developed for calculating evaporation and ET in arid areas.

Method Selection Considerations: **Penman and Related Equations Advantages:** (1) Empirical constants in the equations can be obtained from published tables and graphs, rather than being determined from additional measurements for a specific site; and (2) work well for daily or larger periods in relatively humid areas where horizontal heat divergence in negligible, there is a good vegetative cover, and water is not limiting. **Penman and Related Equations Disadvantages:** (1) Field measurements for a number of meteorological parameters are required and are relatively expensive (although generally less expensive than other micrometeorological methods); and (2) serious discrepancies can occur in dry areas where advected heat accounts for a significant proportion of ET, unless locally determined empirical correction factors are developed. **CRAE Model:** Provides comparable results to the Penman equation, with the advantage that wind speed measurement is not required. **Advection-Aridity Model:** Works well for daily evaporation predictions. The main advantage is that it does not require surface resistance, soil moisture content, or other land surface measures of aridity.

Frequency of Use: Equation has been widely in England and to some extent in the eastern part of the United States. Not recommended for routine field applications and assessments.

Standard Methods/Guidelines: --

Sources for Additional Information: See Table 8-3.

8.4 EVAPOTRANSPIRATION (MICROMETEOROLOGICAL METHODS)

8.4.3 Mass Transfer Methods

Other Names Used to Describe Method: Dalton's law.

Uses at Contaminated Sites: Measuring evaporation.

Method Description: Mass transfer methods use semi-empirical equations for calculating evaporation as a function of: (1) Windspeed, often called the **wind function**, (2) saturation vapor pressure calculated from the temperature of the water surface, and (3) vapor pressure of the air. The wind function represents the combined effect of many variables and requires the estimation or measurement of one or more empirical constants and a mass-transfer coefficient.

Method Selection Considerations: **Advantages:** Once the wind function has been determined, fewer measurements are required than for energy balance methods. **Disadvantages:** (1) Most accurate results require taking measurements in the center of a water body, which is difficult; (2) requires calibration with independently determined evaporation estimates; and (3) mass transfer methods for determining evapotranspiration (ET) generally require very complex instrumentation and well-trained personnel.

Frequency of Use: Widely used for measuring evaporation; rarely used for ET.

Standard Methods/Guidelines: --

Sources for Additional Information: Bras (1990), Dunne and Leopold (1978), U.S. Geological Survey (1982). See also, Table 8-3.

8.4 EVAPOTRANSPIRATION (MICROMETEOROLOGICAL METHODS)

8.4.4 Energy Budget Methods

Other Names Used to Describe Method: Energy balance/Bowen ratio method.

Uses at Contaminated Sites: Indirect field method for estimating evaporation and evapotranspiration (ET).

Method Description: The total energy available for evaporation or ET is measured. The equation for net radiation at the earth's surface is rearranged to solve for ET. Figure 8.4.4 illustrates the various components of the heat budget equation for a vegetated soil surface. Required field measurements include humidity (vapor pressure) and temperature profile above the ground or water surface, net radiation (Section 8.2.7), and soil heat flux (Section 1.6.3). Temperature gradients usually are measured using thermocouples. Humidity gradient is measured either by using two psychrometers or hygrometers (Sections 8.1.3 and 8.1.4) positioned at different elevations above the vegetative cover, or two tubes for collecting of samples for which moisture content is measured.

Method Selection Considerations: **ET Advantages:** (1) Is accurate in high humidity environments (within 5 to 10 percent of actual); and (2) can be used on hilly as well as flat terrain and for a wide variety of vegetation types, such as croplands and forests. **ET Disadvantages:** (1) Is expensive because of the large number of parameters that must be measured; (2) is less accurate where humidity is low; (3) heat divergence, sampling techniques, and advection can cause problems; (4) weekly instrumentation maintenance is required; (5) measurements over months or years are required to obtain average ET values; and (6) the energy required for photosynthesis (around 5 to 10 percent) is difficult to measure accurately, so it must be estimated. **Lake Evaporation Disadvantages:** (1) Does not consider flow of heat through the bottom of the lake, which can be significant in shallow lakes; (2) does not account for effects due to radiative diffusivity, stability of the air, and spray; and (3) is strongly affected by the ability to evaluate the advective energy component.

Frequency of Use: Well accepted for research applications. Not recommended for routine field applications and assessments.

Standard Methods/Guidelines: --

Sources for Additional Information: Bowen (1926), Bras (1990), DeVries and Afgan (1975), Dunne and Leopold (1978), Robins (1965), Rosenberg et al. (1983), Sharma (1985), Thompson et al. (1989), U.S. Geological Survey (1982). See also, Table 8-3.

$$H = R_N = S + ET + K + N + \text{Storage Terms} \quad \text{III.42}$$

in which H = heat budget,
R_N = net radiation,
S = energy to soil heat,
ET = energy used for evapotranspiration,
K = sensible heat to air, and
N = energy used by plant in photosynthesis.

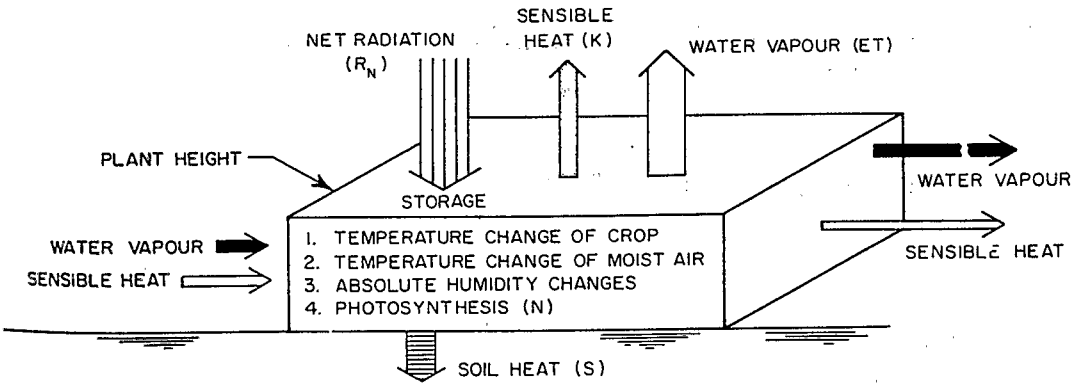

Figure 8.4.4 **The heat budget equation and diagram of energy balance over a vegetated surface (Gray, 1973, after King, 1961). R_N, S, K, and N must be measured or estimated to solve for evapotranspiration.**

8.4 EVAPOTRANSPIRATION (MICROMETEOROLOGICAL METHODS)

8.4.5 Profile/Gradient Method

Other Names Used to Describe Method: Aerodynamic/vapor transfer method.

Uses at Contaminated Sites: Indirect field method for estimating evapotranspiration (ET).

Method Description: The **profile** or **gradient** method relates the vertical gradients of humidity and horizontal wind velocity to the rate of evaporation or ET from the underlying surface. Field measurements include: (1) The humidity gradient above the vegetative cover, and (2) wind profiles to estimate a momentum transfer coefficient (Km). The turbulent transfer coefficient for water vapor (Ke) might need to be measured to determine an empirical coefficient in the equation used to calculate ET to account for observed differences between the two transfer coefficients. The **Thornthwaite-Holtzman** equation is the most widely used formula for calculating evaporation using this method.

Method Selection Considerations: **Advantages:** (1) Once required coefficients have been determined, only windspeed and humidity gradient need be measured; and (2) works best in large, flat areas with uniform plant cover. **Disadvantages:** (1) Requires relatively complicated humidity and wind profile measurements; (2) the turbulent transfer coefficient for water vapor (Ke) also must be measured, unless it can be assumed to equal the momentum transfer coefficient (Km); (3) is less suitable for areas that are aerodynamically unstable because of rough vegetation cover or topography; and (4) is less accurate than mass transfer and energy budget methods because calculation sensitivity of instruments is more critical for accurate results and errors are more likely from adverse boundary conditions.

Frequency of Use: Sometimes used for short-term intensive studies, but not recommended for routine field applications and assessments.

Standard Methods/Guidelines: --

Sources for Additional Information: Sharma (1985), Thompson et al. (1989), U.S. Geological Survey (1982), Veihmeyer (1964). See also, Table 8-3.

8.4.6 Eddy Correlation Method

Other Names Used to Describe Method: Eddy flux method.

Uses at Contaminated Sites: Indirect field method for estimating evaporation and evapotranspiration (ET).

Method Description: Accurate, closely spaced instantaneous measurements of vertical wind velocity and humidity are averaged over a period of 1/2 hour or more. Water vapor flux (ET) is calculated from an equation relating deviations of humidity and vertical wind velocity from the mean. Extremely sensitive instrumentation, such as a propeller anemometer or sonic anemometer, is required for vertical wind measurements. Infrared hygrometry or wet-bulb/dry-bulb psychrometers usually are used for humidity measurements. On sloping surfaces, three-dimensional wind measurements are required.

Method Selection Considerations: **Advantages:** Is the most direct means of measuring ET; (2) is independent of atmospheric conditions or types of underlying surfaces; (3) is accurate in low and high humidity environments. **Disadvantages:** Requires expensive and delicate instrumentation.

Frequency of Use: Well accepted for short-term research applications. Not recommended for routine field applications and assessments.

Standard Methods/Guidelines: --

Sources for Additional Information: Rosenberg et al. (1983), Sharma (1985), Thompson et al. (1989), U.S. Geological Survey (1982). See also, Table 8-3.

Table 8-2 Reference Index for Hydrometeorological Data Collection and Measurement Methods

Topic	References
Climatic Data Sources/Uses	Eder et al. (1989), Hatch (1988), Whiting (1975, 1976)
Meteorological Tables	Letestu (1966), List (1966)
General References	ASTM (1986), Berry et al. (1945), Brakensiek et al. (1979), Brock and Nicolaidis (1984), Brunt (1944), Fritschen and Gay (1979), Hardy and Fisher (1972), Huschke (1970), Lockhart (1989a), Malone (1951), Meteorological Office (1956), Monteith (1972), National Weather Service (1972, 1975), Spilhaus and Middleton (1973), Tanner (1963), UNESCO (1969), U.S. Army (1975), U.S. Geological Survey (1980), U.S. Weather Bureau (1955), WMO (1971, 1973, 1974, 1975), WMO-IASH (1965)
EPA Guidance Documents	U.S. EPA (1985, 1987a,b)
Precipitation Gages/Samplers	Gilman (1964), Neff (1977), Purcell and Brown (1991), Simmons and Bigelow (1990)
Precipitation Analysis	Butler (1957), DeWiest (1966), Kazmann (1988), Skeat (1969), Wisler and Brater (1959); Frequency/Probability Maps: Thomas and Whiting (1977), U.S. Department of Commerce (1961)
Wind Speed/Direction	ASTM (1985a, 1990), Finkelstein et al. (1986a,b), Hayashi (1987), Lockhart (1985a,b, 1987, 1989b), Snow et al. (1989), Stearns (1985), Turner (1986)
Humidity	ASTM (1982, 1983, 1984a, 1985b), U.S. Weather Bureau (1963a), Wexler (1957, 1965), Wexler and Brombacher (1951)
Solar Radiation	ASTM (1984b), Carter et al. (1977), Coulson (1975), Elsasser and Culbertson (1960-atmospheric radiation table), Gates (1962), Kennedy (1949-pyrheliometers), Latimer (1972), Norris (1974), Selcuk and Yellott (1962), Suomi and Kuhn (1958); Estimation methods: Anderson and Baker (1967), Koberg (1964)

Table 8-3 Reference Index for Evaporation and Evapotranspiration Measurement Methods

Topic	References
Hydrology Texts Covering ET	ASCE (1952), Branson et al. (1981), Bras (1990), DeWiest (1966), Dunne and Leopld (1978), Eagleson (1970), Gray (1973), Kazmann (1988), Linsley et al. (1949, 1982), Skeat (1969), Viessman et al. (1977), Wisler and Brater (1959); Symposia: Sokolow and Chapman (1974)
General Reviews	Anderson et al. (1950), Barry (1973), Bennett and Linstedt (1978), Black et al. (1969), Brutsaert (1982), Christian et al. (1970), Criddle (1958), Doorenbos and Pruitt (1977), Evans (1962), Gangopadhyaya et al. (1966), Hamon (1961), Hanks and Ashcroft (1980), Hide (1954), Hillel (1982), Jensen (1974), Kittredge (1941), Levine (1959), Lowry and Johnson (1942), Monteith (1965), Robins (1965), Robins and Haise (1961), Rosenberg et al. (1968), Saxton and McGuiness (1982), Sharma (1985), Stephens and Stewart (1964), Tanner (1967, 1968), Thompsen et al. (1989), Thornthwaite (1948), U.S. Geological Survey (1982), Veihmeyer (1964), Webb (1975), WMO (1966)
Water Balance Methods (See also, Tables 4-3 and 7-6)	
Lysimetric Methods	Aboukhaled et al. (1982), Harrold (1966), Kohnke et al. (1940), Pelton (1961), Robins (1965), Tanner (1967), van Bavel (1961), Visser (1962); Nonweighable Lysimeters: Colman and Hamilton (1947), Evans (1971), Gilbert and van Bavel (1954), Mather (1954), Patric (1961), Robinson (1970), Stevenson and van Schaik (1967); Weighable Lysimeters (see also, monolith lysimeters, Table 9-4): Harrold and Dreibelbis (1951, 1958), Katul and Parlange (1992), Mustonen and McGuinness (1968), Pruitt and Angus (1960), Ritchie and Burnett (1968), Rosenberg et al. (1967), van Bavel and Myers (1962), van Bavel and Reginato (1965), van Hylckama (1966, 1968), Williamson (1963), Wind Hzn (1958); Hydraulic Lysimeters: Black et al. (1968), Dagg (1970), DeBoodt et al. (1966), Ekern (1967), Forsgate et al. (1965), Hanks and Shawcroft (1965); Lysimeters (Unspecified): Blad and Rosenberg (1974), Blaney et al. (1930), King et al. (1956), Kittredge (1941), Makkink (1957), Martin and Rich (1948), McGuiness and Bordne (1972), Young and Blaney (1942); Microlysimeters: Abramova (1968), Al-Khafaf et al. (1978), Boast and Robertson (1982), Shawcroft and Gardner (1983), Staple (1974), Walker (1983)
Soil Moisture Budget	Bowman and King (1965), Bresler and Kemper (1970), DeBoodt et al. (1966), Hillel (1971), Idso et al. (1975), Jenson (1974), Ligon (1969), Lomen and Warrick (1978), McGowan and Williams (1980), Rose (1966), Rose and Krishnan (1967), Slaytor (1967), Tanner (1967, 1968), van Bavel and Stirk (1967); Methods of Modulating Potential Rates to Predict Soil Moisture Withdrawal: Holmes (1961), Robertson and Holmes (1959), Taylor and Haddock (1956)
Water Budget Methods	Eagleson (1978a,b); Evaporation: Anderson (1954), Hanks et al. (1969), Harbeck and Kennon (1954), Horton (1943b), Langbein et al. (1951), McKay and Stichling (1961), Winter (1981); Inflow-Outflow: Blaney et al. (1938, 1942), Jensen (1967), Lowry and Johnson (1942), Wilcox (1960), Yin and Brook (1992); Integration/Leaf Area Index Methods: Blaney et al. (1938, 1942), Hanks (1974), Jensen et al. (1970), Kristensen (1974), Raymond and Rezin (1989), Ritchie (1974); Watersheds: Hewlett et al. (1969), Lee (1970), Row and Reimann (1961), Williams (1940); Floodplains: Bowie and Kam (1968), Culler (1970), Gatewood et al. (1950), Hanson et al. (1972), Horton (1973-liteature review), Langbein (1942), Reigner (1966), Taylor and Nickle (1933)

Table 8-3 (cont.)

Topic	References
Water Balance Methods (cont.)	
Pan Evaporation	ASCE (1934), Bouwer (1959), Doorenbos and Pruitt (1977), Gangopadhyaya et al. (1966), Jensen (1974), Kohler et al. (1955), McKay and Stichling (1961), Mortenson and Hawthorn (1934), Mukammal (1961), Mukammal and Bruce (1960), Nordenson and Baker (1962), Peck and Munro (1976), Pruitt (1960), Rohwer (1931, 1934), U.S. Weather Bureau (1955), Young (1947); Modified Energy Budget with Insulated Pan: Cummings (1940), Kohler and Parmele (1967), U.S.Geological Survey (1982); Pan Coefficients: ASCE (1934), Ficke et al. (1977), Hall (1934), Kohler (1954), Rohwer (1931, 1934), Sonmor (1963), State of California (1973), White (1932), Young (1947); Pan Evaporation Maps: Horton (1943a), Kohler et al. (1959); ET Estimates from Pan Evaporation: Mortenson and Hawthorne (1934), Pruitt (1960), Pruitt and Jensen (1955), Robertson and Holmes (1956), Stanhill (1962), Yin and Brook (1992)
Atmometers	Abbe (1935), Halkias et al. (1955), Livingston (1935), Livingston and Haasis (1929), Mukammal (1961), Mukammal and Bruce (1960), O'Connor (1955), Sonmor (1963), State of California (1973)
Ground-Water Fluctuation	Blaney et al. (1933), Davis and DeWiest (1966), Gatewood et al. (1950), Troxell (1936), Weeks and Sorey (1973), White (1932)
Transpiration	Cohen et al. (1981), Jarvis et al. (1981), Koch et al. (1971), Reicosky and Peters (1977), Veihmeyer (1964). Also, U.S. Geological Survey (1982) contains over 50 other references on methods for measuring or estimating transpiration.
Micrometeorological Methods	
General	Cruff and Thompson (1967), DeVries and Afgan (1975), Ficke (1972), Halstead and Covey (1957), Hanks and Ashcroft (1980), Harbeck (1952), Hillel (1980, 1982), Hughes (1967), Lemon et al. (1957), Penman (1963), Penman et al. (1967), Szeicz (1975), Tanner (1967, 1968), Thom (1975), Van Wijk and De Vries (1954); Bare Soils: Black et al. (1969), Fuchs et al. (1969)
Empirical ET Equations	Reviews: Bras (1990), Criddle (1958), Cruff and Thompson (1967), Eagleson (1970), Gray (1973), Jensen (1966a), Pierson and Jackman (1975), Pruitt and Doorenbos (1977), Robins and Haise (1961), Sharma (1985), Tanner (1967), Thompson et al. (1989), U.S. Geological Survey (1982), Veihmeyer (1964); Blaney-Morin/(Modified) Blaney-Criddle: Blaney (1959), Blaney and Criddle (1950, 1962), Blaney and Morin (1942), Blaney et al. (1952), Criddle (1958), Cruff and Thompson (1967), Dunne and Leopold (1978), Pruitt and Doorenbos (1977), State of California (1973), Stephens and Stewart (1964), U.S. Weather Bureau (1905), Yin and Brook (1992); Jensen-Haise: Jensen (1966b), Jensen and Haise (1963), Jensen et al. (1970); Thornthwaite: Dunne and Leopold (1978), Pelton et al. (1960), Stephens and Stewart (1964), Thornthwaite (1931, 1948), Thornthwaite and Mather (1955, 1957), Thornthwaite and Wilm (1944), Yin and Brook (1992); Others: Behnke and Maxey (1969), Benson et al. (1992), Christiansen (1968), Christiansen and Hargreaves (1969), Gardner (1958), Halkias et al. (1955), Harding et al. (1930), Hargreaves (1956), Hargreaves and Samani (1985), Holdridge (1962), Kincaid et al. (1979), Lowry and Johnson (1942), Makkink (1957), Munson (1962), Priestly and Taylor (1972), Ritchie (1972), Saxton and McGuiness (1982), Tanner and Jury (1976)

Table 8-3 (cont.)

Topic	References
Empirical Evaporation Equations	Reviews: Bras (1990), Helfrich et al. (1982), McKay and Stichling (1961), Weisman (1975); Specific Equations: Harbeck (1962), Kohler (1954), Kohler et al. (1955), Kuzmin (1957), Marciano and Harbeck (1954), Meyer (1915, 1942), Rohwer (1931), Shulyakovsky (1969)
Physically-Based Equations	Benson et al. (1992), Bras (1990), Businger (1956), Chiew and McMahon (1991), Cordova and Bras (1981), Crago and Brutsaert (1992), Duell (1990), Gray (1973), Katul and Parlange (1992), Lemur and Zhang (1990), McKay and Stichling (1961), Monteith (1963), Morton (1978, 1983, 1991), Penman (1948, 1956), Pruitt and Doorenbos (1977), Robins (1965), Rosenberg et al. (1983), Sharma (1985), Staple (1974), Tanner (1968), Tanner and Pelton (1960), Thompson et al. (1989), Turner (1957), U.S. Geological Survey (1982), van Bavel (1966), Veihmeyer (1964); Advection Aridity Evaporation Model: Brutsaert and Stricker (1979), Lemeur and Zhang (1990), Morton (1991), Parlange and Katul (1992); Soil Evaporation Loss Equations: Philip (1957, 1991); Lake Evaporation Equations: Goodling et al. (1976), Weisman and Brutsaert (1973)
Mass-Transfer Methods	Evaporation: Brasklavskii and Vikulina (1954), Ficke (1972), Harbeck (1962), Harbeck et al. (1954, 1958), Hughes (1967), Jobson (1973), Marciano and Harbeck (1954), Munn (1961), Resch and Selva (1979), Richards and Irbe (1969), Sutton (1949), Sverdrup (1946), Thornthwaite and Holzman (1939), Turner (1966), Wunderlich (1972)
Energy Budget Methods	Evaporation: Anderson (1954), Levine (1959), McKay and Stichling (1961), Tanner (1960); Evapotranspiration: Angus and Watts (1984), Aston and van Bavel (1972), Black and McNaughton (1971), Blad and Rosenberg (1974, 1975), Denmead and McIlroy (1970), Dennehy and McMahon (1989), Duell (1990), Fritschen (1965), Jackson et al. (1977), Kohler et al. (1955), Lemon (1960), Munn (1961), Ohmura (1982), Pruitt (1963), Robins (1965), Tanner (1966, 1968, 1988), Webb (1975)
Profile/Gradient Method	Businger et al. (1971), Dyer (1963, 1965, 1974), King (1966), Marciano and Harbeck (1954), Pierson and Jackman (1975), Priestly (1959), Pruitt et al. (1973), Quinn (1979), Szeicz et al. (1969), Thornthwaite and Holzman (1939, 1942); Vapor Transfer Method: Pasquill (1949, 1950), Rider (1954, 1957), Rider and Robinson (1951), Tanner (1960), Veihmeyer (1964)
Eddy Correlation	Christian et al. (1970), Duell (1990), Dyer (1961, 1968), Easterbrook (1969), Gangopadhyaya et al. (1966), Goddard and Pruitt (1966), Goltz et al. (1970), Hicks (1973), Hicks et al. (1973), Jobson (1973), Swinbank (1951), Swinbank and Dyer (1967), Tanner (1966, 1988)

SECTION 8 REFERENCES

Abbe, C. 1935. Piche Evaporimeter. Monthly Weather Review 33:235-255.

Aboukhaled, A., A. Alfaro, and M. Smith. 1982. Lysimeters. Irrigation and Drainage Paper 39, United Nations Food and Agricultural Organization, Rome.

Abramova, M.M. 1968. Evaporation of Soil Water under Drought Conditions. Sov. Soil Sci. 1968:1151-1158. [Microlysimeter]

Adams, J.E., G.F. Arkin, and J.T. Ritchie. 1976. Influence of Row Spacing and Straw Mulch on First Stage Drying. Soil Sci. Soc. Am. J. 40:436-442.

Al-Khafaf, S., P.J. Wierenga, and B.C. Williams. 1978. Evaporative Flux from Irrigated Cotton as Related to Leaf Area Index, Soil Water, and Evaporative Demand. Agron. J. 70:912-917. [Microlysimeter]

American Society for Testing and Materials (ASTM). Annual. Temperature Measurement. (Vol. 14.03), ASTM, Philadelphia, PA. [E1-91a covers specifications for ASTM Thermometers]

American Society for Testing and Materials (ASTM). 1982. Standard Definitions of Terms Relating to Humidity Measurements. D4023-82a, (Vol. 11.03), ASTM, Philadelphia, PA.

American Society for Testing and Materials (ASTM). 1983. Standard Method of Measuring Humidity with Cooled-Surface Condensation (Dew Point) Hygrometer. D4030-83, (Vol. 11.03), ASTM, Philadelphia, PA.

American Society for Testing and Materials (ASTM). 1984a. Standard Test Method of Measuring Humidity with a Psychrometer (The Measurement of Wet- and Dry-Bulb Temperatures). E337-84, (Vol. 11.03), ASTM, Philadelphia, PA.

American Society for Testing and Materials (ASTM). 1984b. Calibration of Secondary Reference Pyrheliometers and Pyrheliometers for Field Use. E816-84, (Vol. 11.03), ASTM, Philadelphia, PA.

American Society for Testing and Materials (ASTM). 1984c. Standard Methods for Measuring Surface Atmospheric Pressure. D3631-84, (Vol. 11.03), ASTM, Philadelphia, PA.

American Society for Testing and Materials (ASTM). 1985a. Standard Test Method for Measuring Surface Wind by Means of Wind Vanes and Rotating Anemometers. D4480-85, (Vol. 11.03), ASTM, Philadelphia, PA.

American Society for Testing and Materials (ASTM). 1985b. Standard Practice for Maintaining Constant Relative Humidity by Means of Aqueous Solutions. E104-85, (Vol. 11.03), ASTM, Philadelphia, PA.

American Society for Testing and Materials (ASTM). 1986. Operational Comparability of Meteorological Measurements. D4430-86, (Vol. 11.03), ASTM, Philadelphia, PA.

American Society for Testing and Materials (ASTM). 1990. Standard Test Method for Determining the Performance of a Cup Anemometer or Propeller Anemometer. D5096-90, (Vol. 11.03), ASTM, Philadelphia, PA.

American Society of Civil Engineers (ASCE). 1934. Evaporation From Water Surfaces, A Symposium. Trans. ASCE 99:671-718.

American Society of Civil Engineers (ASCE). 1952. Hydrology Handbook. ASCE Manual of Engineering Practice No. 28, ASCE, New York, NY.

Anderson, J.A. 1954. Instrumentation for Mass-Transfer and Energy-Budget Studies. In: Water Loss Investigations: Lake Hefner Studies. U.S. Geological Survey Professional Paper 269, pp. 35-44.

Anderson, E.A. and D.R. Baker. 1967. Estimating Incident Terrestrial Radiation under All Atmospheric Conditions. Water Resources Research 3:975-988.

Anderson, E.R., J.L. Anderson, and J.J. Marciano. 1950. A Review of Evaporation Theory and Development of Instrumentation. U.S. Navy Electronics Laboratory Report 159, NE 121215, San Diego, CA.

Angus, D.E. and P.J. Watts. 1984. Evapotranspiration--How Good is the Bowen Ration Method. Agric. Water Manage. 8:133-150.

Arkin, G.F., J.T. Ritchie, and J.E. Adams. 1974. A Method for Measuring First-Stage Soil Water Evaporation in the Field. Soil Sci. Soc. Am. Proc. 38:951-954.

Aston, A.R. and C.H.M. van Bavel. 1972. Soil Surface Water Depletion and Leaf Temperature. Agron. J. 64:368-373.

Barry, R.G. 1973. Evaporation and Transpiration. In: Climate in Review, G. McBoyle (ed.), Houghton Mifflin, Boston, MA.

Beckett, S.H., H.F. Blaney, and C.A. Taylor. 1930. Irrigation Water Requirement Studies of Citrus and Avocado Trees in San Diego County, California, 1926 and 1927. Univ. of Calif. Agric. Exp. Stn. Bull. 489, 72 pp.

Behnke, J.J. and G.B. Maxey. 1969. An Empirical Method of Estimating Monthly Potential Evapotranspiration in Nevada. J. Hydrology 8(4):418-430.

Bennett, E.R. and K.D. Linstedt. 1978. Sewage Disposal by Evaporation-Transpiration. EPA/600/2-78/163 (NTIS PB288-588), 196 pp.

Benson, V.W., K.N. Potter, H.C. Bogusch, D. Goss, and J.R. Williams. 1992. Nitrogen Leaching Sensitivity to Evapotranspiration and Soil Water Storage Estimates in EPIC. J. Soil and Water Conservation 47(4):334-337. [Penman-Montheith, Penman, Priestly-Taylor, Hargreaves, EPIC Hargreaves modification methods]

Berry, Jr., F.A., E. Bollay, and N.R. Beers. 1945. Handbook of Meteorology. McGraw-Hill, New York, NY.

Black, T.A. and K.G. McNaughton. 1971. Psychometric Apparatus for Bowen-Ratio Determination over Forests. Boundary-Layer Meteorology 2:246-254.

Black, T.A., G.W. Thurtell, and C.B. Tanner. 1968. Hydraulic Load-Cell Lysimeter, Construction, Calibration and Tests. Soil Sci. Soc. Am. Proc. 32:623-629.

Black, T.A., W.R. Gardner, and G.W. Thurtell. 1969. The Prediction of Evaporation, Drainage, and Soil Water Storage for a Bare Soil. Soil Sci. Soc. Am. Proc. 33:655-660.

Blad, B.L. and N.J. Rosenberg. 1974. Lysimetric Calibration of the Bowen Ratio-Energy Balance Method for Evapotranspiration Estimates in the Central Great Plains. J. Appl. Meteor. 13:227-236.

Blad, B.L. and N.J. Rosenberg. 1975. Evapotranspiration of Subirrigated Vegetation in the Platte River Valley of Nebraska. Univ. of Nebraska Agric. Meteor. Progress Report 75-1, 178 pp. [Energy budget method]

Blaney, H.F. 1959. Monthly Consumptive Use Requirements for Irrigated Crops. J. Irr. and Drainage Div. ASCE 85(IR1,pt. 1):1-12.

Blaney, H.F. and W.D. Criddle. 1950. Determining Water Requirements in Irrigated Areas from Climatological and Irrigation Data. SCS TP-96. U.S. Dept. of Agriculture, Washington, DC.

Blaney, H.F. and W.D. Criddle. 1962. Determining Consumptive Use and Irrigation Water Requirements. U.S. Dept. Agric. Tech. Bulletin 1275, 59 pp. [Empirical equations]

Blaney, H.F. and K.V. Morin. 1942. Evaporation and Consumptive Use of Water Empirical Formulas. Trans. Am. Geophys. Union 23(I):76-83.

Blaney, H.F., C.A. Taylor, and A.A. Young. 1930. Rainfall Penetration and Consumptive Use of Water in Santa Ana River Valley and Coastal Plain. Calif. State Div. Water Resources Bull. 33.

Blaney, H.F., C.A. Taylor, M.G. Nickle, and A.A. Young. 1933. Water Losses under Natural Conditions from Wet Areas in Southern California, Part I. Calif. State Div. Water Resources Bull. 44. (Part II by H. Troxell.)

Blaney, H.F., P.A. Ewing, O.W. Israelsen, C. Rohwer, and F.C. Scokey. 1938. Water Utilization, Upper Rio Grande Basin, Part III. U.S. National Resources Committee.

Blaney, H.F., P.A. Ewing, K.V. Morin, and W.D. Criddle. 1942. Consumptive Water Use and Requirements, Report of the Participating Agencies. Pecos River Joint Investigation of the National Resources Planning Board, Washington, DC.

Blaney, H.F., L.F. Rich, W.D. Criddle, G.B. Gleason, and R.L. Lowry. 1952. Consumptive Use of Water. J. Hydrol. Div. ASCE

117:948-967. [Empirical equations]

Boast, C.W. 1986. Evaporation for Bare Soil Measured with High Spatial Resolution. In: Methods of Soil Analysis, Part 1, 2nd edition, A. Klute (ed.), Agronomy Monograph No. 9, American Society of Agronomy, Madison, WI, pp. 889-900.

Boast, C.W. and T.M. Robertson, 1982. A "Micro-Lysimeter" Method of Determining Evaporation from Bare Soil: Description and Laboratory Evaluation. Soil Sci. Soc. Am. J. 46:689-696.

Bouchet, R.J. 1963. Evapotranspiration Reelle et Potentielle Signification Climatique. Int. Ass. Sci. Hydrol. Pub. 62:134-142.

Bouwer, H. 1959. Integrating Rainfall-Evaporation Recorder. Agric. Eng. 40:278-279.

Bowen, I.S. 1926. The Ratio of Heat Losses by Conduction and by Evaporation from Any Water Surface. Physical Review 27:779-787.

Bowie, J.E. and W. Kam. 1968. Use of Water by Riparian Vegetation, Cottonwood Wash, Arizona. U.S. Geological Survey Water-Supply Paper 1858, 62 pp.

Bowman, D.H. and K.M. King. 1965. Determination of Evapotranspiration Using the Neutron Scattering Method. Can. J. Soil Science 45:117-126.

Brakensiek, D.L., H.B. Osborn, and W.J. Rawls (eds.). 1979. Field Manual for Research in Agricultural Hydrology. Agricultural Handbook No. 224, U.S. Department of Agriculture, Washington, DC. [6 Chapters cover: precipitation, runoff, climate, sedimentation, geology, and soil conditions and watershed characteristics]

Branson, F.A., G.F. Gifford, K.G. Denard, and R.F. Hadley. 1981. Rangeland Hydrology, 2nd edition. Kendall/Hunt, Dubuque, IA.

Bras, R.L. 1990. Hydrology: An Introduction to Hydrologic Science. Addison-Wesley, New York, NY. [Chapter 5 contains 14 empirical evaporation formulas and covers water balance, energy balance, mass-transfer methods and Penman equation]

Brasklavskii, A.P. and Z.A. Vikulina. 1954. Evaporation Norms from Water Reservoirs. U.S. Department of the Interior and the National Science Foundation (Trans. from Russian by Israel Program for Scientific Translations), 219 pp.

Bresler, E. and W.D. Kemper. 1970. Soil Water Evaporation as Affected by Wetting Methods and Crust Formation. Soil Sci. Soc. Am. Proc. 34:3-8.

Brock, F.V. and C.E. Nicolaidis. 1984. Instructor's Handbook on Meteorological Instrumentation. NCAR Technical Note NCAR/TN-237+1A, National Center for Atmospheric Research, Boulder, CO.

Brunt, D. 1944. Physical and Dynamical Meteorology. Cambridge University Press.

Brutsaert, W. 1982. Evaporation into the Atmosphere: Theory, History and Applications. D. Reidel Publishing Co., Dordrecht, Holland, 299 pp.

Brutsaert, W. and H. Stricker. 1979. An Advection-Aridity Approach to Estimate Actual Evapotranspiration. Water Resources Research 15(2):442-450.

Businger, J.A. 1956. Some Remarks on Penman's Equation for the Evapotranspiration. Netherlands J. Agric. Sci. 4:77-80.

Businger, J.A., et al. 1971. Flux-Profile Relationships in the Atmospheric Surface Layer. J. Atmos. Science 28:181-189.

Butler, S.S. 1957. Engineering Hydrology. Prentice-Hall, Englewood-Cliffs, NJ.

Cameron, R.E., G.B. Blank, and D.R. Gensel. 1966. Sampling and Handling of Desert Soils. NASA Technical Report No. 32-908. Jet Propulsion Laboratory, California Institute of Technology, Pasadena, CA.

Carter, E.A., et al. 1977. Catalog of Solar Radiation Measurement Equipment. ERDA/ORO/5361-1. U.S. Energy and Development Administration, Washington, DC.

Chiew, F.H.S. and T.A. McMahon. 1991. The Applicability of Morton's and Penman's Evapotranspiration Estimates in Rainfall-Runoff Modeling. Water Resources Bulletin 27(4):611-619.

Christian, C.S., R.O. Slaytor, C.E. Hounam, K.C Leverington, and W.C. Swinbank. 1970. Estimating Evapotranspiration: An Evaluation of Techniques. Australian Water Resources Council Hydrological Series No. 5, 23 pp.

Christiansen, J.E. 1968. Pan Evaporation and Evapotranspiration from Climatic Data. J. Irr. and Drainage Div. ASCE 94:243-265.

Christiansen, J.E. and G.H. Hargreaves. 1969. Irrigation Requirements from Evaporation. Trans. Int. Comm. on Irrigation and Drainage, Pt. 2, R.24-R.45, Question 23, p. 23.569-23.596.

Cohen, Y., M. Fuchs, and G.C. Green. 1981. Improvement of the Heat Pulse Method for Determining Sap Flow in Trees. Plant Cell Environ. 4:391-397. [Transpiration]

Colman, E.A. and E.L. Hamilton. 1947. The San Dimas Lysimeters. U.S. Forest Service Forest and Range Experiment Station Research Note 47, Berkeley, CA.

Cordova, J.R. and R.L. Bras. 1981. Physically-Based Probabilistic Models of Infiltration, Soil Moisture and Actual Evapotranspiration. Water Resources Research 17(1):93-106.

Coulson, K.L. 1975. Solar and Terrestrial Radiation--Methods and Measurements. Academic Press, New York, NY, 322 pp.

Crago, R.D. and W. Brutsaert. 1992. A Comparison of Several Evaporation Equations. Water Resources Research 28(3):951-955. [Penman, equilibrium evaporation adjusted with soil-moisture dependent coefficients, and Penman-Monteith equations]

Criddle, W.D. 1958. Methods of Computing Consumptive Use of Water. J. Irr. and Drain. Div., ASCE 84(IR1):1-27.

Cruff, R.W. and T.H. Thompson. 1967. A Comparison of Methods of Estimating Potential Evapotranspiration from Climatological Data in Arid and Subhumid Environments. U.S. Geological Survey Water Supply Paper 1839-M, 38 pp. [Thornthwaite, Weather Bureau/Kohler (1955), Lowry-Johnson, Haman, and Blaney Criddle methods]

Culler, R.C. 1970. Objective, Methods and Environment--Gila River Phreatophyte Project, Graham County, Arizona. U.S. Geological Survey Professional Paper 655-A, 25 pp. [Floodplain ET water budget]

Cummings, N.W. 1935. Evaporation from Water Surfaces: Status of Present Knowledge and Need for Further Investigations. Trans. Am. Geophys. Union 16(2):507-509.

Cummings, N.W. 1940. The Evaporation-Energy Equations and Their Practical Application. Trans. Am. Geophys. Union 21(2):512-522.

Dagg, M. 1970. A Study of Water Use of Tea in East Africa Using a Hydraulic Lysimeter. Agric. Meteor. 7:303-320.

Davis, S.N. and R.J.M. DeWiest. 1966. Hydrogeology. John Wiley & Sons, New York, NY, 463 pp.

DeBoodt, M., P. Moerman, and J. DeBoever. 1966. Comparative Study of the Water Balance in the Aerated Zones with Radio-Active Methods and Weighable Lysimeter. IASH Publ. No. 82, Int. Ass. Sci. Hydrology, Vol. 1, pp. 63-74.

Denmead, O.T. and I.C. McIlroy. 1970. Measurements of Nonpotential Evaporation from Wheat. Agric. Meteor. 7:285-302. [Energy budget method]

Dennehy, K.F. and P.B. McMahon. 1989. Water Movement in the Unsaturated Zone at a Low-Level Radioactive-Waste Burial Site Near Barnwell, South Carolina. U.S. Geological Survey Water Supply Paper 2345, 40 pp. [Bowen ratio]

DeVries, D.A. and N.H. Afgan (eds.). 1975. Heat and Mass Transfer in the Biosphere, Vol. 1, Transfer Processes in the Plant Environment. John Wiley & Sons, New York, NY, 594 pp.

DeWiest, R.J.M. 1966. Geohydrology. John Wiley & Sons, New York, NY.

Doorenbos, J. and W.O. Pruitt. 1977. Crop Water Requirements. FAO Irrigation and Drainage Paper 24, Food and Agriculture Organization, Rome, 170 pp.

Duell, Jr., L.F.W. 1990. Estimates of Evapotranspiration in Alkaline Scrub and Meadow Communities of Owens Valley, California, Using the Bowen Ratio, Eddy-Correlation, and Penman-Combination Methods. U.S. Geological Survey Water Supply Paper 2370-E, 39 pp.

Dunne, T. and L.B. Leopold. 1978. Water in Environmental Planning. W.H. Freeman, San Francisco, CA, 818 pp. [Evaporation: evaporation pans, water budget, energy budget, mass transfer; evapotranspiration: evaporation pans, lysimeters, energy-balance, Thornthwaite, Blaney-Criddle]

Dyer, A.J. 1961. Measurements of Evaporation and Heat Transfer in the Lower Atmosphere by an Automatic Eddy-Correlation Technique. Quart. J. Royal Meteor. Soc. 87:401-412.

Dyer, A.J. 1963. The Adjustment of Profiles and Eddy Fluxes. Quart. J. Royal Meteor. Soc. 89:276-280.

Dyer, A.J. 1965. The Flux-Gradient Relation for Turbulent Heat Transfer in the Lower Atmosphere. Quart. J. Royal Meteor. Soc. 91:151-157.

Dyer, A.J. 1968. An Evaluation of Eddy Flux Variation in the Atmospheric Boundary Layer. J. Appl. Meteor. 7:845-850.

Dyer, A.J. 1974. A Review of Flux-Profile Relationships. Bound. Layer Meteorol. 7:363-372.

Eagleson, P.S. 1970. Dynamic Hydrology. McGraw-Hill, New York, NY.

Eagleson, P.S. 1978a. Climate, Soil, and Vegetation, 1, Introduction to Water Balance Dynamics. Water Resources Research 14(5):705-712.

Eagleson, P.S. 1978b. Climate, Soil, and Vegetation, 4, The Expected Values of Annual Evapotranspiration. Water Resources Research 14(5):731-739.

Easterbrook, C.C. 1969. A Study on the Effects of Waves on Evaporation from Free Water Surfaces. Water Resource Technical Publication, Research Report No. 18, Bureau of Reclamation, Denver, CO, 58 pp.

Eder, B.K., L.E. Truppi, and P.L. Finkelstein. 1989. A Climatology of Temperature and Precipitation Variability in the United States. EPA/600/3-89/025 (NTIS PB89-165930).

Ekern, P.C. 1967. Pilot Evapotranspiration Study: Lysimeter Design. Tech. Report No. 13, Office of Water Resources Research, U.S. Department of the Interior, 26 pp.

Elsasser, W.M. and M.F. Culbertson. 1960. Atmospheric Radiation Tables. Meteorological Monographs 23(August):1-43.

Evans, G.N. 1962. Methods of Estimating Evapotranspiration of Water by Crops. In: Water Requirements of Crops, Special Publication SP-SW-0162, American Society of Agricultural Engineers, St. Joseph, MI.

Evans, G.N. 1971. Evaporation from Rice at Griffith, New South Wales. Agric. Meteor. 8:117-127. [Nonweighing lysimeter]

Ficke, J.F. 1972. Comparison of Evaporation Computation Methods, Pretty Lake, Lagrange County, Northeastern Indiana. U.S. Geological Survey Professional Paper 686-A, 48 pp.

Ficke, J.F., D.B. Adams, and T.W. Danielson. 1977. Evaporation for Seven Reservoirs in the Denver Water-Supply System, Central Colorado. U.S. Geological Survey Water-Resources Investigations Report 76-114.

Finkelstein, P.L., J.C. Kaimal, J.E. Gaynor, M.E. Graves, and T.J. Lockhart. 1986a. Comparison of Wind Monitoring Systems, Part I: In-Situ Sensors. J. Atmos. and Oceanic Technol. 3:583-593.

Finkelstein, P.L., J.C. Kaimal, J.E. Gaynor, M.E. Graves, and T.J. Lockhart. 1986b. Comparison of Wind Monitoring Systems, Part II: Doppler Sodars. J. Atmos. and Oceanic Technol. 3:594-604.

Forsgate, J.A., P.H. Hosegood, and J.S.G. McCulloch. 1965. Design and Installation of Semi-Enclosed Hydraulic Lysimeters. Agric. Meteor. 2:43-52.

Fritschen, L.F. 1965. Accuracy of Evaporation Determinations by the Bowen Ratio Method. Bull. Int. Ass. Sci. Hydrology 10(2):38-48.

Fritschen, L.J. and L.W. Gay. 1979. Environmental Instrumentation. Springer-Verlag, New York, NY.

Fuchs, M.R., C.B. Tanner, G.W. Thurtell, and T.A. Black. 1969. Evaporation from Drying Surface by the Combination Method. Agron. J. 61:22-26.

Gangopadhyaya, M.W., G.E. Harbeck, Jr., T.J. Nordenson, M.M. Omar, and V.A. Uryvaevc. 1966. Measurement and Estimation of Evaporation and Evapotranspiration. In: Technical Note No. 83 (WMO No. 201 TP.105), World Meteorological Organization, Geneva, pp. 40-61.

Gardner, W.R. 1958. Some Steady State Solutions of the Unsaturated Moisture Flow Equation with Application to Evaporation from a Water Table. Soil Science 85:228-232.

Gates, D.M. 1962. Energy Exchange in the Biosphere. Harper and Row, New York, NY.

Gatewood, J.S., T.W. Robinson, B.R. Colby, J.D. Hem, and L.C. Halpenny. 1950. Use of Water by Bottom-Land Vegetation in Lower Safford Valley, Arizona. U.S. Geological Survey Water-Supply Paper 1103, 210 pp.

Gilbert, M.J. and C.H.M. van Bavel. 1954. A Simple Field Installation for Measuring Maximum Evapotranspiration. Trans. Am. Geophys. Union 35:937-942. [Nonweighing lysimeter]

Gilman, C.S. 1964. Rainfall. In: Handbook of Applied Hydrology, V.T. Chow (ed.), McGraw-Hill, New York, NY, Section 9.

Goddard, W.B. and W.O. Pruitt. 1966. Mass Transfer-Eddy Flux Method. In: Proc. Conf. on Evapotranspiration and Its Role in Water Resources Management, Am. Soc. Agric. Eng., pp. 42-44.

Goltz, S.M., C.B. Tanner, and G.W. Thurtell. 1970. Evaporation Measurements by the Eddy Correlation Method. Water Resources Research 6(2):440-446.

Goodling, J.S., B.L. Sill, and W.J. McCabe. 1976. An Evaporation Equation for an Open Body of Water Exposed to the Atmosphere. Water Resources Bulletin 12(4):843-853.

Gray, D.M. (ed.). 1973. Handbook on the Principles of Hydrology (with special emphasis directed to Canadian conditions in the discussions, applications and presentation of data). Water Information Center, Port Washington, NY, 720 pp. (Reprint of 1970 edition published in Canada.) [Evaporation: pan, mass transfer, energy budget, water budget, empirical equations; evapotranspiration: lysimeter, ground water fluctuations, water balance, evaporimeters/atmometers, energy budget, Penman equation, soil moisture budget, empirical equations (Blaney-Criddle, Thornthwaite, Lowry-Johnson)]

Halkias, N.A., F.J. Veihmeyer, and A.H. Hendrickson. 1955. Determining Water Needs for Crops for Climatic Data. Hilgardia 24:207-233.

Hall, L.S. 1934. Evaporation from Water Surface. Trans. Am. Soc. Civil Eng. 99:715-724. [Pan coefficients]

Halstead, M.H. and W. Covey. 1957. Some Meteorological Aspects of Evapotranspiration. Soil Sci. Soc. Am. Proc. 21:461-464. [Lysimeters, energy balance, profile/gradient method]

Hamon, W.R. 1961. Estimating Potential Evapotranspiration. J. Hydraulics Div., ASCE 87(HY3):107-120.

Hanks, R.J. 1974. Model for Predicting Plant Yield as Influenced by Water Use. Agron. J. 66:660-665. [Leaf area index method]

Hanks, R.J. and G.L. Ashcroft. 1980. Applied Soil Physics. Springer-Verlag, New York, NY.

Hanks, R.J. and R.W. Shawcroft. 1965. An Economical Lysimeter to Evaporation Studies. Agron. J. 57:631-636. [Hydraulic lysimeter]

Hanks, R.J., A. Klute, and E. Bresler. 1969. A Numeric Method for Estimating Infiltration, Redistribution, Drainage and Evaporation of Water from Soil. Water Resources Research 5(5):1064-1069. [Water balance]

Hanson, R.L., F.P. Kipple, and R.C. Culler. 1972. Changing the Consumptive Use on the Gila River Floodplain, Southeastern Arizona. In: Age of Changing Priorities for Land and Water, Irr. and Drainage Div. Specialty Conf., ASCE, pp. 309-329.

Harbeck, G.E. 1952. The Lake Hefner Water Loss Investigations. U.S. Geological Circular 229, 153 pp.

Harbeck, Jr., G.E. 1962. A Practical Field Technique for Measuring Reservoir Evaporation Utilizing Mass-Transfer Theory. U.S. Geological Survey Professional Paper 272-E, pp. 101-105.

Harbeck, Jr., G.E. and F.W. Kennon. 1954. Water Budget Control. In: Water Loss Investigations: Lake Hefner Studies, U.S. Geological Survey Professional Paper 269, pp 17-34.

Harbeck, Jr., G.E., et al. 1954. Water-Loss Investigations, Vol. 1, Lake Hefner Studies, Technical Report. U.S. Geological Survey Professional Paper 269.

Harbeck, Jr. G.E., et al. 1958. Water-Loss Investigations, Lake Mead Studies. U.S. Geological Survey Professional Paper 298.

Harding, S.T., et al. 1930. Consumptive Use of Water in Irrigation: Progress Report of the Duty of Water Committee of the Irrigation Division. Trans. ASCE 94:1349-1399.

Hardy, C.E. and W.C. Fischer. 1972. Fire-Weather Observers' Handbook. U.S. Department of Agriculture, Ogden, UT.

Hargreaves, G.H. 1956. Irrigation Requirements Based on Climatic Data. J. Irr. and Drainage Div. ASCE 82(IR3):1-10.

Hargreaves, G.H. and Z.A. Samani. 1985. Reference Crop Evapotranspiration from Temperature. App. Eng. In Agric. 1:96-99.

Harrold, L.L. 1966. Measuring Evaporation by Lysimetry. In: Proc. Conf. on Evapotranspiration and Its Role in Water Resources Management, Am. Soc. Agric. Eng., pp. 28-33.

Harrold, L.L. and F.R. Dreibelbis. 1951. Agricultural Hydrology as Evaluated by Monolith Lysimeters. SCS Tech. Bull. No. 1050. U.S. Dept. of Agric., Soil Conservation Service, 149 pp.

Harrold, L.L. and F.R. Dreibelbis. 1958. Evaluation of Agricultural Hydrology by Monolith Lysimeters. U.S. Dept. of Agriculture Tech. Bull. No. 1179.

Hatch, W.L. 1988. Selective Guide to Climatic Data Sources. Key to Meteorological Records Documentation No. 4.11. NOAA National Climate Data Center, Asheville, NC.

Hayashi, T. 1987. Dynamic Response of a Anemometer. J. Atmos. Oceanic Technol. 4:281-287.

Helfrich, K.R., E.E. Adams, A.L. Godbey, and D.R.F. Harleman. 1982. Evaluation of Models for Predicting Evaporative Water Loss in Cooling Impoundments. EPRI CS-2325, Electric Power Research Institute, Palo Alto, CA. [Reviews 10 empirical evaporation equations]

Hewlett, J.D., H.W. Lull, and K.G. Reinhart. 1969. In Defense of Experimental Watershed. Water Resources Research 5(1):306-316. [ET water budget method]

Hicks, B.B. 1973. Eddy Fluxes Over a Vineyard. Agric. Meteor. 12(2):203-215.

Hicks, B.B., M.L. Wesely, and R.L. Hart. 1973. Field Studies at the Dresden Cooling Pond: An Introduction. Radiol. and Env. Res. Div. Annual Rept ANL-8060. Argonne National Laboratories, Argonne, IL, Pt. 4, pp. 1-25.

Hide, J.C. 1954. Observation on Factors Influencing the Evaporation of Soil Moisture. Soil Sci. Soc. Am. Proc. 18:234-239.

Hillel, D. 1971. Soil and Water Physical Principles and Processes. Academic Press, New York, NY, 288 pp.

Hillel, D. 1980. Application of Soil Physics. Academic Press, New York, NY.

Hillel, D. 1982. Introduction to Soil Physics. Academic Press, New York, NY.

Holdridge, L.R. 1962. The Determination of Atmospheric Water Movements. Ecology 43:1-9. [Temperature based method for estimating PET]

Holmes, R.M. 1961. Estimation of Soil Moisture Content Using Evaporation Data. In: Proc. of Hydrology Symposium, No. 2, Evaporation, Queens's Printer, Ottawa, pp. 184-196.

Holzman, B. 1941. The Heat-Balance Method for the Determination of Evaporation from Water Surfaces. Trans. Am. Geophys. Union 22(3):655-659.

Horton, R.E. 1943a. Evaporation Maps of the United States. Trans. Am. Geophys. Union 24(II):743-753.

Horton, R.E. 1943b. Hydrologic Interrelations Between Lands and Oceans. Trans. Am. Geophys. Union 24(2):753-764.

Horton, J.S. 1973. Evapotranspiration and Water Research as Related to Riparian and Phreatophyte Management. U.S. Forest

Service Misc. Publ. No. 1234, 192 pp.

Hounam, C.E. 1973. Comparison between Pan and Lake Evaporation. WMO Tech. Note 126, World Meteorologic Organization, Geneva, 52 pp.

Hughes, G.H. 1967. Analysis of Techniques Used to Measure Evaporation from Salton Sea. U.S. Geological Survey Professional Paper 272-H, pp. 151-176.

Huschke, R.E. (ed.). 1970. Glossary of Meteorology. American Meteorological Society, Boston, MA, 638 pp. (2nd printing of 1959 edition with corrections.)

Idso, S.B., R.D. Jackson, and R.J. Reginato. 1975. Estimating Evapotranspiration: A Technique Adaptable to Remote Sensing. Science 189:991-992. [Soil moisture energy budget]

Jackson, R.D., R.J. Reginato, and S.B. Idso. 1977. Wheat Canopy Temperature: A Practical Tool for Evaluating Water Requirements. Water Resources Research 13:651-656.

Jarvis, P.G., W.R. Edward, and H. Talbot. 1981. Models of Plant and Crop Water Use. In: Mathematics and Plant Physiology, D.A. Rose and D.A. Charles-Edwardo (eds.), Academic Press, New York, NY, pp. 151-194. [Transpiration]

Jensen, M.E. 1966a. Empirical Methods for Estimating or Predicting Evapotranspiration Using Radiation. In: Proc. Conf. on Evapotranspiration and Its Role in Water Resources Management, Am. Soc. Agric. Eng., pp. 49-53.

Jensen, M.E. 1966b. Discussion of Irrigation Water Requirement of Lawns. J. Irr. and Drainage Div., ASCE 92:95-100.

Jensen, M.E. 1967. Evaluating Irrigation Efficiency. J. Irr. and Drainage Div., ASCE 93(IR1):83-98.

Jensen, M.E. (ed.). 1974. Consumptive Use of Water and Irrigation Requirements: A Report Prepared by the Technical Committee on Irrigation Water Requirements. American Society of Civil Engineers, New York, NY, 215 pp..

Jensen, M.E. and H.R. Haise. 1963. Estimating Evapotranspiration from Solar Radiation. J. Irr. and Div., ASCE 89:15-41.

Jensen, M.E., D.C. Robb, and C.E. Franzoy. 1970. Scheduling Irrigation Using Climate-Crop-Soil Data. J. Irr. and Drainage Div., ASCE 96:25-38.

Jobson, H.E. 1972. Effect of Using Averaged Data on the Computed Evaporation. Water Resources Research 8(2):513-518.

Jobson, H.E. 1973. Evaluation of Turbulent Transfer Laws Used in Computing Evaporation Rates. U.S. Geological Survey Open-File Report, 169 pp.

Katul, G.G. and M.B. Parlange. 1992. A Penman-Brutsaert Model for Wet Surface Evaporation. Water Resources Research 28(1):121-126. [Lysimeter]

Kazmann, R.G. 1988. Modern Hydrology, 3rd edition. National Water Well Publishing, Dublin, OH, 426 pp. (1st edition 1965.)

Kennedy, R.E. 1949. Computation of Daily Insolation Energy. Am. Meteor. Soc. Bull. 30(6):208-213.

Kincaid, D.C., E.G. Kruse, H.R. Duke, and D.C. Champion. 1979. Evapotranspiration Computed to Estimate Leaching Fractions. Trans. Am. Soc. Agric. Eng. 22:310-314.

King, K.M. 1961. Evaporation from Land Surfaces. In: Proc. of Hydrology Symposium No. 2, Evaporation, Queen's Printer, Ottawa, pp. 55-80.

King, K.M. 1966. Mass Transfer-Profile Methods. In: Proc. Conf. on Evapotranspiration and Its Role in Water Resources Management, Am. Soc. Agric. Eng., pp. 49-53.

King, K.M., C.B. Tanner, and V.E. Soumi. 1956. A Floating Lysimeter and Its Evaporation Recorder. Trans. Am. Geophys. Union 37:738-742. (See also, 1957 discussion in Trans. Am. Geophys. Union 38:765-768.)

Kittredge, J. 1941. Report of Committee on Transpiration and Evaporation, 1940-1941. Trans. Am. Geophys. Union 22:906-915.

Koberg, G.E. 1964. Methods to Compute Long-Wave Radiation from the Atmosphere and Reflected Solar Radiation from a Water

Surface. U.S. Geological Survey Professional Paper 272-F, pp. 107-136.

Koch, W., O.L. Lange, and E.D. Schulze. 1971. Ecophysiological Investigations on Wild and Cultivated Plants in the Negev Desert , Part 1, Methods: A Mobile Laboratory for Measuring Carbon Dioxide and Water Vapor Exchange. Oecologia 8(3):296-309. [Transpiration]

Kohler, M.A. 1954. Lake and Pan Evaporation. In: Water Loss Investigations: Lake Hefner Studies: U.S. Geological Survey Professional Paper 269, pp. 127-148.

Kohler, M.A. and L.H. Parmele. 1967. Generalized Estimates of Free Water Evaporation. Water Resources Research 3(4):977-1005.

Kohler, M.A., T.J. Nordenson, and W.E. Fox. 1955. Evaporation from Pans and Lakes. U.S. Weather Bureau Research Paper 38, 21 pp.

Kohler, M.A., T.J. Nordenson, and D.R. Baker. 1959. Evaporation Maps for the United States. U.S. Weather Bureau Tech. Paper 37, 13 pp.

Kohnke, H., F.R. Dreibelbis, and J.M. Davidson. 1940. A Survey and Discussion of Lysimeters and a Bibliography on Their Construction and Performance. U.S. Dept. of Agriculture Misc. Pub. 372.

Kristensen, K.J. 1974. Actual Evapotranspiration in Relation to Leaf Area. Nordic Hydrology 5:173-182. [Leaf area index method]

Kuzmin, P.O. 1957. Hydrophysical Investigations of Land Waters. Int. Ass. Sci. Hydrology 3:468-478. [Empirical evaporation equation based on USSR reservoirs with surface >20-100 meters above bottom]

Langbein, W.B. 1942. Monthly Evapotranspiration Losses from Natural Drainage Basins. Trans. Am. Geophys. Union 23:604-612.

Langbein, W.B. and C.E. Hains, and R.C. Culler. 1951. Hydrology of Stock-Water Reservoir in Arizona. U.S. Geological Survey Circular 110.

Latimer, J.R. 1972. Radiation Measurement. Technical Manual Series No. 2, International Field Year for the Great Lakes, Canadian National Commission for the Hydrological Decade.

Lee, R. 1970. Theoretical Estimates versus Forest Water Yield. Water Resources Research 6(5):1327-1334. [Water budget methods]

Lemeur, R. and L. Zhang. 1990. Evaluation of Three Evapotranspiration Models in Terms of Their Applicability for an Arid Region. J. Hydrology 114:395-411. [Advection-aridity model, Morton CRAE model, Penman-Monteith model; see also, comment by Morton (1991)]

Lemon, E.R. 1960. Photosynthesis under Field Conditions II: An Aerodynamic Method for Determining the Turbulent CO_2 Exchange Between the Atmosphere and a Corn Field. Agronomy J. 52:697-703. [Energy-budget method]

Lemon, E.R., A.H. Glaser, and L.E. Satterwhite. 1957. Some Aspects of the Relationship of Soil, Plant and Meteorological Factors to Evapotranspiration. Soil Sci. Soc. Am. Proc. 21:464-468. [Lysimeters, energy balance]

Levine, G. 1959. Methods of Estimating Evaporation. Trans. Am. Soc. Agric. Eng. 2:32-34.

Letetsu, S. (ed.). 1966. International Meteorological Tables. WMO No. 188 TP 94, World Meteorological Organization, Geneva.

Libby, F.J. and P.R. Nixon. 1963. A Portable Lysimeter Adaptable to a Wide Range of Site Situations. IASH Publ. No. 62, Int. Ass. Hydrol. Sci., pp. 153-158.

Ligon, J.T. 1969. Evaluation of the Gamma Transmission Method for Determining Soil-Water Balance and Evapotranspiration. Trans. Am. Soc. Agric. Eng. 12:121-126.

Linsley, Jr., R.K., M.A. Kohler, and J.L.H. Paulhus. 1949. Applied Hydrology. McGraw-Hill, New York, NY.

Linsley, Jr., R.K., M.A. Kohler, and J.L.H. Paulhus. 1982. Hydrology for Engineers, 2nd edition. McGraw-Hill, New York, NY, 482 pp. (1st edition 1958.)

List, R.J. (ed.). 1966. Smithsonian Meteorological Tables, 6th edition. Smithsonian Misc. Collections, V. 114, Pub. 4014, Smithsonian Institution, Washington, DC.

Livingston, B.E. 1935. Atmometers of Porous Porcelain and Paper: Their Use in Physiological Ecology. Ecology 16(3):438-472.

Livingston, B.E. and F. Haasis. 1929. The Measurement of Evaporation in Freezing Weather. J. Ecology 17:315-328.

Lockhart, T.J. 1985a. Some Cup Anemometer Testing Methods. J. Atmos. Oceanic Technol. 2:680-683.

Lockhart, T.J. 1985b. Wind Measurement Calibration. Bull. Am. Meteor. Soc. 66:1545.

Lockhart, T.J. 1987. Performance of an Anemometer Determined by the ASTM Method. J. Atmos. Oceanic Technol. 4:160-169.

Lockhart, T.J. 1989a. Quality Assurance Handbook for Air Pollution Measurement Systems: Vol. IV. Meteorological Measurements, Revised August 1989. EPA/600/4-90/003. (Supersedes EPA/600/4-82/060 by Finkelstein et al. with the same title.)

Lockhart, T.J. 1989b. Accuracy of the Collocated Transfer Standard Method for Wind Instrument Auditing. J. Atmos. Oceanic Technol. 6:715-723.

Lomen, D.O. and A.W. Warrick. 1978. Linearized Moisture Flow with Loss at the Soil Surface. Soil Sci. Soc. Am. J. 42:396-400.

Lowry, Jr., R.L. and A.F. Johnson. 1942. Consumptive Use of Water for Agriculture. Trans. ASCE 107:1243-1266. [Effective heat-day degree–used for relatively large areas in the arid western United States]

Makkink, G.F. 1957. Testing the Penman Formula by Means of Lysimeters. J. Inst. Water Engr. 11(3):277-288.

Malone, T.F. (ed.). 1951. Compendium of Meteorology. American Meteorological Society, Boston, MA, 1334 pp.

Marciano, J.J. and G.E. Harbeck, Jr. 1954. Mass-Transfer Studies. In Water Loss Investigations: Lake Hefner Studies. U.S. Geological Survey Professional Paper 269, pp. 46-70. [Empirical evaporation equation based on 2200 acre reservoir]

Martin, W.P. and L.R. Rich. 1948. Preliminary Hydrologic Results, 1935-48, "Base Rock" Undisturbed Soil Lysimeters in Grassland Type, Arizona. Soil Sci. Soc. Am. Proc. 13:561-567.

Mather, J.R. 1954. A Summary of Evapotranspiration at Seabrook New Jersey. Publications in Climatology 7:7-51. [Nonweighing lysimeter]

McGowan, M. and J.B. Williams. 1980. The Water Balance of an Agricultural Catchment. I: Estimation of Evaporation for Soil Water Records. J. Soil Science 31:217-230. [Neutron probe]

McGuinness, J.L. and E.F. Bordne. 1972. Comparison of Lysimeter-Derived Potential Evapotranspiration with Computer Values. USDA Agric. Research Service Tech. Bull. No. 1452, 71 pp.

McKay, D.J. and J.D. McTaggert-Cowan. 1977. An Intercomparison of Radiation Shields for Auto Stations. WMO Pub. No. 480, World Meteorological Organization, Geneva, pp. 208-213.

McKay, G.A. and W. Stichling. 1961. Evaporation Computations for Prairie Reservoirs. In: Proc. of Hydrology Symposium No. 2, Evaporation, Queen's Printer, Ottawa, pp. 135-167. [Water budget, evaporation pans, energy budget, physical/empirical formulas: Penman, Meyer (1915), Kohler et al. (1955), Harbeck (1962)]

Meteorological Office. 1956. Handbook of Meteorological Instruments, Part 1: Instruments for Surface Observations. Her Majesty's Stationery Office, London.

Meyer, A.F. 1915. Computing Runoff from Rainfall and Other Physical Data. Trans. Am. Soc. Civil Engr. 79:1056-1155. [U.S. Shallow lakes]

Meyer, A.F. 1942. Evaporation from Lakes and Reservoirs. Minnesota Resources Commission, St. Paul, MN, 56 pp.

Monteith, J.L. 1963. Gas Exchange in Plant Communities. In: Environmental Control of Plant Growth, L.T. Evans (ed.), Academic Press, New York, NY, pp. 95-112. [Penman equation]

Monteith, J.L. 1965. Evaporation and Environment. Symp. Soc. Exp. Biol. 19:205-234.

Monteith, J.L. 1972. Survey of Instruments for Micrometeorology. International Biological Programs Handbook No. 22, Blackwell Scientific Publications, Osney Mead, Oxford, England.

Mortenson, E. and L.R. Hawthorn. 1934. The Use of Evaporation Records in Irrigation Experiments with Truck Crops. Am. Soc. Hortic. Sci. 30:466-469. [Evaporation pan]

Morton, F.I. 1978. Estimating Evapotranspiration from Potential Evaporation: Practicality of an Iconoclastic Approach. J. Hydrology 38:1-32. [Based on modification of Penman equation by Kohler and Parmele (1967)]

Morton, F.I. 1983. Operational Estimates of Actual Evapotranspiration and Their Significance to the Science and Practice of Hydrology. J. Hydrology 66:1-76. [Complementary Relationship Areal Evapotranspiration (CRAE) model]

Morton, F.I. 1991. Evaluation of Three Evapotranspiration Models in Terms of Their Applicability for an Arid Region--Comment. J. Hydrology 128:369-374.

Mukammal, E.I. 1961. Evaporation Pans and Atmometers. In: Proc. of Hydrology Symposium No. 2, Evaporation, Queen's Printer, Ottawa, pp. 84-105.

Mukammal, E.I. and J.P. Bruce. 1960 Evapotranspiration Measurements of Pan and Atmometer. CIR-300, TEC-315, Meteor. Branch, Canada.

Munn, R.E. 1961. Energy-Budget and Mass Transfer Theories of Evaporation. In: Proc. of Hydrology Symposium No. 2, Evaporation, Queen's Printer, Ottawa, pp. 8-26.

Munson, W.C. 1962. Method for Estimating Consumptive Use of Water for Agriculture. Trans. ASCE 127(III):200-212.

Mustonen, S.E. and J.L. McGuinness. 1968. Estimating Evapotranspiration in a Humid Region. ARS U.S. Dept. of Agric., Agricultural Research Service Tech. Bull No. 1389, 123 pp.

National Weather Service. 1972. Observing Handbook No. 2. Data Acquisition Division, Office of Meteorological Operations, Silver Spring, MD.

National Weather Service. 1975. Federal Meteorological Handbook No. 1, Surface Observations, 2nd edition. U.S. Government Printing Office, Washington, DC, 77 pp. (1st edition 1970.)

Neff, E.L. 1977. How Much Rain Does a Rain Gage Gage? J. Hydrology 35:213-220.

Nordenson, T.T. and D.R Baker. 1962. Comparative Evaluation of Evaporation Instruments. J. Geophys. Res. 67:671-679. [Class A and other pans]

Norris, D.J. 1974. Calibration of Pyranometers in Inclined and Inverted Positions. Solar Energy 16:53-55.

O'Connor, T.C. 1955. On the Measurement of Global Radiation Using Black and White Atmometers. Geofisica Pura Appl. (Milan) 30:130-136.

Ohmura, A. 1982. Objective Criteria for Rejecting Data for Bowen Ratio Flux Calculation. J. Appl. Meteor. 21(4):595-598.

Parlange, M.B. and G.G. Katul. 1992. An Advection-Aridity Evaporation Model. Water Resources Research 28(1):127-132.

Pasquill, F. 1949. Some Estimates of the Amount and Diurnal Variation of Evaporation from Pasture in Fair Spring Weather. Proc. Roy. Meteor. Soc., Ser. A, 198:116-140.

Pasquill, F. 1950. Some Further Considerations on the Measurement and Direct Evaluation of Natural Evaporation. Quart. J. Roy. Meteor. Soc. 76:287-301.

Patric, J.H. 1961. The San Dimas Large Lysimeters. J. Soil Water Conservation 16:13-17.

Peck, E.L. and J.C. Munro. 1976. Comments on Design of Evaporation Networks. In: Operational Hydrology Report 8, WMO No. 433, World Meteorological Organization, Geneva, pp 60-77.

Pelton, W.L. 1961. The Use of Lysimetric Methods to Measure Evapotranspiration. In: Proc. of Hydrology Symposium No. 2, Evaporation, Queen's Printer, Ottawa, pp. 106-127.

Pelton, W.L., K.M. King, and C.B. Tanner. 1960. An Evaluation of the Thornthwaite Method for Determining Potential Evapotranspiration. Agronomy J. 52:387-395.

Penman, H.L. 1948. Natural Evaporation from Open Water, Bare Soil, and Grass. Proc. Royal Soc. (London), A(193):120-145.

Penman, H.L. 1956. Estimating Evaporation. Trans. Am. Geophys. Union 37(1):43-50.

Penman, H.L. 1963. Vegetation and Hydrology. Commonwealth Bureau of Soils Technical Communication 53, Harpenden, England.

Penman, H.L., D.E. Angus, and C.H.M. van Bavel. 1967. Microclimatic Factors Affecting Evaporation and Transpiration. In: Irrigation of Agricultural Lands, R.M. Hagan, et al. (eds.), Agronomy Monograph No. 11, American Society of Agronomy, Madison, WI, Vol. 2, pp. 483-505.

Philip, J.R. 1957. Evaporation and Moisture and Heat Fields in the Soil. J. Meteorol. 14:354-366.

Philip, J.R. 1991. Upper Bounds on Evaporation Losses from Buried Sources. Soil Sci. Soc. Am. J. 55:1516-1520.

Pierson, F.W. and A.P. Jackman. 1975. An Investigation of the Predictive Ability of Several Evaporation Equations. J. Appl. Meteor. 13(4):477-487.

Priestly, C.H.B. 1959. Turbulent Transfer in the Lower Atmosphere. University of Chicago Press, 130 pp. [Profile method]

Priestly, C.H.B. and R.J. Taylor. 1972. On the Assessment of Surface Heat Flux and Evaporation Using Large Scale Parameters. Monthly Weather Review 100:81-92. [Empirical equations]

Pruitt, W.O. 1960. Relation of Consumptive Use of Water to Climate. Trans. Am. Soc. Agric. Eng. 3(1):9-17. [Evaporation pan]

Pruitt, W.O. 1963. Applications of Several Energy Balance and Aerodynamic Evaporation Equations under a Wide Range of Stability: U.S. Army Electronic Command Atmospheric Laboratory, Fort Huachuca, Arizona. University of California, Davis, CA, pp. 107-124.

Pruitt, W.O. and D.E. Angus. 1960. Large Weighing Lysimeter for Measuring Evapotranspiration. Trans. Am. Soc. Agric. Eng. 3(2):13-18.

Pruitt, W.O. and J.J. Doorenbos. 1977. Background and Development of Method to Predict Reference Crop Evapotranspiration (ET). In: Crop Water Requirements, FAO Irrigation and Drainage Paper No. 24, Food and Agricultural Organization, Rome, Appendix II, pp. 108-119.

Pruitt, W.O. and M.C. Jensen. 1955. Determining When to Irrigate. Agric. Eng. 36:389-393.

Pruitt, W.O., D.L. Morgan, and F.J. Lourence. 1973. Momentum and Mass Transfer in the surface Boundary Layer. Quart. J. Roy. Meteor. Soc. 99:370-386.

Purcell, R.G. and R.B. Brown. 1991. Snow/Rain Collector Sampler. EPA/600/3-91/005 (NTIS PB91-167601/AS).

Quinn, F.H. 1979. An Improved Aerodynamic Evaporation Technique for Large Lakes with Application to the International Field Year for the Great Lakes. Water Resources Research 15(4):935-940.

Raymond, L.H. and K.V. Rezin. 1989. Evapotranspiration Estimates Using Remote-Sensing Data, Parker and Palo Verde Valleys, Arizona and California. U.S. Geological Survey Water Supply Paper 2334, 18 pp. [Integration water budget method]

Reicosky, D.C. and D.B. Peters. 1977. A Portable Chamber for Rapid Evapotranspiration Measurements on Field Plots. Agron. J. 69:729-732. [Transpiration]

Reigner, I.C. 1966. A Method of Estimating Streamflow Loss by Evapotranspiration from the Riparian Zone. Forest Science 12:130-139.

Resch, F.H. and J.P. Selva. 1979. Turbulent Air-Water Mass Transfer Under Varied Stratification Conditions. J. Geophys. Res. 84(C7):3205-3217.

Richards, T.L. and J.G. Irbe. 1969. Estimates of Monthly Evaporation Losses from the Great Lakes, 1950 to 1968, Based on the

Mass Transfer Technique. In: Proc. 12th Conf. Great Lakes Research, Int. Ass. Great Lakes Res., pp. 469-487.

Richardson, B. 1931. Evaporation as a Function of Insolation. Trans. ASCE 95:996-1011.

Rider, N.E. 1954. Eddy Diffusion of Momentum, Water Vapour, and Heat Near the Ground. Phil. Trans. Royal Soc. (London), Series A 246:481-501. [Profile/gradient method]

Rider, N.E. 1957. Water Loss from Various Land Surfaces. Quart. J. Roy. Meteor. Soc. 83:181-193. [Profile/gradient method]

Rider, N.E. and G.D. Robinson. 1951. A Study of the Transfer of Heat and Water Vapor Above the Surface of Short Grass. Quart. J. Roy. Meteorol. Soc. 77:375-401.

Ritchie, J.T. 1972. Model for Predicting Evaporation from a Row Crop with Incomplete Cover. Water Resources Research 8(5):1204-1213.

Ritchie, J.T. 1974. Atmospheric and Soil Water Influences on the Plant Water Balance. Agric. Meteor. 14:183-198. [Leaf area index method]

Ritchie, J.T. and E. Burnett. 1968. A Precision Weighing Lysimeter for Row Crop Water Use Studies. Agron. J. 60:545-549.

Robertson, C.W. and R.H. Holmes. 1956. Estimating Irrigation Water Requirements. Canada Dept. Agric. Exp. Farm Ser.

Robertson, C.W. and R.M. Holmes. 1959. A Modulated Soil Moisture Budget. Monthly Weather Review 87:101-106.

Robins, J.S. 1965. Evapotranspiration. In: Methods of Soil Analysis, Part 1, 1st edition., C.A. Black (ed.), ASA Monograph No. 9, American Society of Agronomy, Madison, WI, pp. 286-298. [Blaney-Criddle, Thornthwaite, energy balance, Penman]

Robins, J.S. and H.R. Haise. 1961. Determination of Consumptive Use of Water by Irrigated Crops in the Western United States. Soil Sci. Soc. Am. Proc. 25:150-154.

Robinson, T.W. 1970. Evapotranspiration by Woody Phreatophytes in the Humboldt River Valley near Winnemucca, Nevada. U.S. Geological Survey Professional Paper 491-D, 41 pp. [Nonweighable lysimeter]

Rohwer, C. 1931. Evaporation from Free Water Surfaces. U.S. Dept. Agric. Tech. Bull. No. 271, 96 pp.

Rohwer, C.W. 1934. Evaporation from Water Surface. Trans. ASCE 99:673-703.

Rose, C.W. 1966. Agricultural Physics. Pergamon Press, London, 226 pp.

Rose, C.W. and A. Krishnan. 1967. A Method of Determining Hydraulic Conductivity Characteristics for Non-Swelling Soils In Situ and of Calculating Evaporation from Bare Soil. Soil Science 103:369-373.

Rosenberg, N.H., H.E. Hart, T.A. Hales, K.W. Brown, and R.L. Boller. 1967. Research in Evapotranspiration. Horticulture Progress Report 60, Nebraska Water Resource Research Institute. [Weighable lysimeters]

Rosenberg, N.J., H.E. Hart, and K.W. Brown. 1968. Evaporation--Review of Research. Nebraska Agric. Exp. Stn. Bull MP20.

Rosenberg, N.J., B.L. Blad, and S.B. Verma. 1983. Microclimate: The Biological Environment. John Wiley & Sons, New York, NY, 495 pp. [Water balance, energy balance, Penman-Monteith, eddy correlation methods]

Row, P.B., and L.F. Reimann. 1961. Water Use by Brush, Grass, and Grassforb Vegetation. J. Forestry 59(3):175-180. [Watershed budget]

Ryan, R.J. 1991. Results of Hydrologic Research at a Low-Level Radioactive Waste Disposal Site Near Sheffield, Illinois. U.S. Geological Survey Water Supply Paper 2367.

Saxton, K.E. and J.L. McGuiness. 1982. Evapotranspiration. In: Hydrologic Modeling of Small Watersheds, C.T. Haan, H.P. Johnson, and D.L. Brakensiek (eds.), Am. Soc. Agric. Eng., St. Joseph, MI, pp. 229-273. [Antecedent soil moisture coefficients to estimate AET from PET]

Selcuk, K. and J.I. Yellott. 1962. Measurements of Direct, Diffuse, and Total Solar Radiation with Silicon Photovoltaic Cells. Solar Energy 6:155-163.

Sharma, M.L. 1985. Estimating Evapotranspiration. Advances in Irrigation 3:213-281.

Shawcroft, R.W. and H.R. Gardner. 1983. Direct Evaporation from Soil Under a Row Crop Canopy. Agric. Meteorol. 28:229-238. [Microlysimeter]

Shulyakovsky, L.G. 1969. Formula for Computing Evaporation with Allowance for Temperature of Free Water Surface. Sov. Hydrol. Selected Papers 6:556-573.

Simmons, C.L. and D.S. Bigelow. 1990. Progress Report: Comparison of Precipitation Measurements by Nipher-Shielded and Standard Belfort Recording Rain Gages at NADP/NTN Sites. EPA/600/3-90/064 (NTIS PB90-261538/AS).

Skeat, W.L. (ed.). 1969. Manual of British Water Engineering Practice, Vol. II, Engineering Practice, 4th edition. W. Heffer and Sons, Cambridge.

Slaytor, R.D. 1967. Plant-Water Relationships. Academic Press, New York, NY, 366 pp.

Snow, J.T., D.E. Lund, M.D. Conner, S.B. Harley, and C.B. Pedigo. 1989. On the Dynamic Response of a Wind Measuring System. J. Atmos. Oceanic Technol. 6:140-146.

Sokolow, A.A. and T.G. Chapman (eds.). 1974. Methods for Water Balance Computations: An International Guide for Research and Practice. The Unesco Press, Paris. [Precipitation, runoff, evaporation]

Sonmor, L.G. 1963. Seasonal Consumptive Use of Water by Crops in Southern Alberta and Its Relationship to Evaporation. Can. J. Soil Sci. 43:287-297.

Spilhaus, A.F. and W.E. Middleton. 1973. Meteorological Instruments. University of Toronto Press, Toronto.

Stanhill, G.A. 1962. The Control of Field Irrigation Practice from Measurement of Evaporation. Israel J. Agric. Res. 12:51-62. [Pan evaporation]

Staple, W.J. 1974. Modified Penman Equation to Provide the Upper Boundary Condition in Computing Evaporation from Soil. Soil Sci. Soc. Am. Proc. 38:837-839. [Microlysimeter]

State of California. 1973. Vegetative Water Use in California. Calif. Dept. of Water Resources Bulletin No. 113-3, 104 pp. [Pan evaporation and atmometers coefficients]

Stearns, C.R. 1985. Wind-Measurement Calibration, Response. Bull. Am. Meteor. Soc. 66:1545.

Stephens, J.C. and E.H. Stewart. 1964. A Comparison of Procedures for Computing Evaporation and Evapotranspiration. Agricultural Research Service, Ft. Lauderdale, FL.

Stevens, Jr., H.H., J.F. Ficke, and G.F. Smoot. 1975. Water Temperature--Influential Factors, Field Measurement, and Data Presentation. U.S. Geological Survey Techniques of Water-Resources Investigations, TWRI 1-D1, 65 pp.

Stevenson, D.S. and J.C. van Schaik. 1967. Some Relations between Changing Barometric Pressure and Water Movement into Lysimeters Having Controlled Water Tables. J. Hydrology 5:187-196. [Nonweighing lysimeters]

Suomi, V.E. and P.M. Kuhn. 1958. An Economical Net Radiometer. Tellus 10:160-163.

Sutton, O.G. 1949. The Application to Micrometerology of the Theory of Turbulent Flow Over Rough Surfaces. Roy. Meteorol. Soc. Quart. J. 75:335-350.

Sverdrup, H.U. 1940. On the Annual and Diurnal Variation of the Evaporation from the Oceans. J. Marine Res. 3(2):93-104.

Sverdrup, H.U. 1946. The Humidity Gradient Over the Sea Surface. J. Meteorol. 3(1):1-8.

Swinbank, W.C. 1951. The Measurement of Vertical Transfer of Heat and Water Vapor by Eddies in the Lower Atmosphere. J. Meteor. 8(3):135-145. [Eddy correlation method]

Swinbank, W.C. and A.J. Dyer. 1967. An Experimental Study in Micrometerology. Quart. J. Roy. Meteor. Soc. 93:494-500. [Eddy correlation method]

Szeicz, G.G. 1975. Instruments and Their Exposure. In: Vegetation and the Atmosphere, J.L. Monteith (ed.), Academic Press, New York, NY, pp. 229-272.

Szeicz, G., G. Endrodi, and S. Tajchman. 1969. Aerodynamic and Surface Factors in Evaporation. Water Resources Research 5(2):380-394.

Tanner, C.B. 1960. Energy Balance Approach to Evapotranspiration from Crops. Soil Sci. Soc. Am. Proc. 24:1-9.

Tanner, C.B. 1963. Basic Instrumentation and Measurements for Plant Environments and Micro-Meteorology. Soils Bulletin 6, University of Wisconsin, Madison, WI.

Tanner, C.B. 1966. Comparison of Energy Balance and Mass Transport Methods for Measuring Evaporation. In: Proc. Conf. on Evapotranspiration and Its Role in Water Resources Management, Am. Soc. Agric. Eng., pp. 45-48.

Tanner, C.B. 1967. Measurement of Evapotranspiration. In: Irrigation of Agricultural Lands, R.M. Hagan et al. (eds.), Agronomy Monograph 11, American Society of Agronomy, Madison, WI, pp. 534-574.

Tanner, C.B. 1968. Evaporation of Water from Plants and Soil. In: Water Deficits and Plant Growth, Vol. 1, T.T. Kozlowski (ed.), Academic Press, New York, NY, pp. 73-106.

Tanner, C.D. 1988. Use Requirements for Bowen Ratio and Eddy Correlation Determination of Evapotranspiration. In: Proc. 1988 Specialty Conf. of the Irrigation and Drainage Div., ASCE, New York, NY.

Tanner, C.B. and W.A. Jury. 1976. Estimating Evaporation and Transpiration from a Row Crop During Incomplete Cover. Agron. J. 68:239-243.

Tanner, C.B. and W.L. Pelton. 1960. Potential Evapotranspiration Estimates by the Approximate Energy Balance Method of Penman. J. Geophys. Res. 65:3391-3413.

Taylor, S.A. and J.L. Haddock. 1956. Soil Moisture Availability Related to Power to Remove Water. Soil Sci. Soc. Am. Proc. 20:284-288.

Taylor, C.A. and H.G. Nickle. 1933. Investigation of Coldwater Canyon. In: Water Losses Under Natural Conditions from Wet Areas in Southern California, Calif. Div. of Water Research Bull. No. 44, pp. 88-121.

Thom, A.S. 1975. Momentum, Mass and Heat Exchanges in Plant Communities. In: Vegetation and the Atmosphere, J.L. Monteith (ed.), Academic Press, New York, NY, pp. 229-272.

Thomas, R.E. and D.M. Whiting. 1977. Annual and Seasonal Precipitation Probabilities. EPA/600/2-77/182 (NTIS PB272-588).

Thompson, C.M., et al. 1989. Techniques to Develop Data for Hydrogeochemical Models. EPRI EN-6637, Electric Power Research Institute, Palo Alto, CA.

Thornthwaite, C.W. 1931. The Climates of North America According to a New Classification. Geog. Rev. 21:633-655.

Thornthwaite, C.W. 1948. An Approach to a Rational Classification of Climate. Geog. Rev. 38:55-94.

Thornthwaite, C.W. and B. Holzman. 1939. The Determination of Evaporation from Land and Water Surfaces. Monthly Weather Review 67(1):4-11.

Thornthwaite, C.W. and B. Holzman. 1942. The Determination of Evaporation from Land and Water Surfaces. U.S. Dept. Agric. Tech. Bull. 817, 14 pp.

Thornthwaite, C.W. and J.R. Mather. 1955. The Water Balance. Publications in Climatology, Vol. 8, No. 1, Laboratory of Climatology, Centerton, NJ, 104 pp.

Thornthwaite, C.W. and J.R. Mather. 1957. Instructions and Tables for Computing Potential Evapotranspiration and Water Balance. Publications in Climatology Vol. X, No. 3, Drexel Institute of Technology, Laboratory of Climatology, Centerton, NJ.

Thornthwaite, C.W. and H.G. Wilm. 1944. Report of the Committee on Transpiration and Evaporation, 1943-44. Trans. Am. Geophys. Union 25(V):683-693.

Troxell, H.C. 1936. The Diurnal Fluctuation in the Ground Water and the Flow of the Santa Ana River and Its Meaning. Trans. Am. Geophys. Union 17(2):496-504.

Turner, J.A. 1957. A Nomographic Solution of Penman's Equation for the Computation of Evaporation. In: Proc. 3rd National Meeting of the Royal Meteorological Society, Toronto. [Nomograms included in Gray (1973)]

Turner, Jr., J.F. 1966. Evaporation Study in a Humid Region, Lake Michie, North Carolina. U.S. Geological Survey Professional Paper 272-G, pp. 137-150.

Turner, D.B. 1986. Comparison of Three Methods for Calculating the Standard Deviation of Wind Direction. J. Climate Appl. Meteor. 25:703-707.

UNESCO. 1969. Representative and Experimental Basins. An International Guide for Research and Practice. Studies and Reports in Hydrology No. 4, UNESCO, Paris, 348 pp.

U.S. Army. 1975. Engineering Design Handbook, Environmental Series: Part 2, Natural Environmental Factors. Material Command, Dept. of the Army.

U.S. Department of Commerce. 1961. Rainfall Frequency Atlas of the United States for Durations from 30 Minutes to 24 Hours and Return Periods from 1-100 Years. Technical Paper 40.

U.S. Environmental Protection Agency (EPA). 1981. Process Design Manual for Land Treatment of Municipal Wastewater. EPA/625/1-81/013. U.S. Army Corps of Engineers, U.S. Department of the Interior, and the U.S. Department of Agriculture also are authors of this report. (Replaces design manual with same title published in 1977 as EPA/625/1-77/008.)

U.S. Environmental Protection Agency (EPA). 1985. Quality Assurance Handbook for Air Pollution Measurement Systems, Vol. V, Precipitation Measurement Systems. EPA/600/4-82/042a.

U.S. Environmental Protection Agency (EPA). 1987a. Ambient Monitoring Guidelines for Prevention of Significant Deterioration. EPA/450/4-87/007 (NTIS PB90-168030), 97 pp.

U.S. Environmental Protection Agency (EPA). 1987b. On-Site Meteorological Program Guidance for Regulatory Modeling Applications. EPA/450/4-87/013 (NTIS PB87-227542), 187 pp.

U.S. Geological Survey. 1980. Hydrometeorological Observations. In: National Handbook of Recommended Methods for Water Data Acquisition. USGS Office of Water Data Coordination, Reston, VA, pp 10-1 to 10-72.

U.S. Geological Survey. 1982. Evaporation and Transpiration. In: National Handbook of Recommended Methods for Water Data Acquisition. USGS Office of Water Data Coordination, Reston, VA, pp 8-1 to 8-57.

U.S. Weather Bureau. 1905. Sunshine Tables. U.S. Weather Bureau Bulletin 805.

U.S. Weather Bureau. 1955. Instructions for Climatological Observers, 10th edition.. U.S. Weather Bureau Circular B.

U.S. Weather Bureau. 1963a. Relative Humidity Psychometric Table, (Celsius) Centigrade Temperatures. U.S. Weather Bureau, Washington DC.

U.S. Weather Bureau. 1963b. Manual of Barometry. Federal Meteorological Handbook No. 8, U.S. Government Printing Office, Washington, DC, 1004 pp.

van Bavel, C.H.M. 1961. Lysimetric Measurements of Evapotranspiration in the Eastern United States. Soil Sci. Soc. Am. Proc. 25:138-141.

van Bavel, C.H.M. 1966. Potential Evaporation: The Combination Concept and Its Experimental Verification. Water Resources Research 2(3):455-467. [Penman equation]

van Bavel, C.H.M. and L.E. Meyers. 1962. An Automatic Weighing Lysimeter. Agric. Eng. 43:580-583, 587-588.

van Bavel, C.H.M. and R.J. Reginato. 1965. Precision Lysimetry for Direct Measurement of Evaporative Flux. In: Methodology of Plant and Ecophysiology, F.E. Eckardt (ed.), UNESCO Arid Zone Research XXV, pp. 129-135.

van Bavel, C.H.M. and G. Stirk. 1967. Soil Water Measurement with an AM^{241}-Be Neutron Source and an Application to Evaporimetry. J. Hydrology 5:40-60.

van Hylckama, T.E.A. 1966. Effect of Soil Salinity on the Loss of Water from Vegetated and Fallow Soil. IASH Publ. No. 82, Int. Ass. Sci. Hydrol., pp. 635-644.

van Hylckama, T.E.A. 1968. Water Level Fluctuations in Evapotranspirimeters. Water Resources Research 4:761-766.

Van Wijk, W.R. and D.A. De Vries. 1954. Evapotranspiration. Netherlands J. Agric. Sci. 2:105-119. [Lysimeters, Blaney-Criddle method, +]

Veihmeyer, F.J. 1964. Evapotranspiration. In: Handbook of Applied Hydrology, V.T. Chow (ed.), McGraw-Hill, New York, NY, pp. 11-1 to 11-38.

Veihmeyer, F.J. and A.H. Hendrickson. 1955. Does Transpiration Decrease as the Soil Moisture Decreases? Trans. Am. Geophys. Union 36:425-428.

Viessman, Jr., W., J.W. Knapp, and T.E. Harbaugh. 1977. Introduction to Hydrology, 2nd edition. Intext Educational, New York, NY, 415 pp. [1st edition 1972]

Visser, W.C. 1962. A Method of Determining Evapotranspiration in Soil Monoliths. Institute for Land and Water Management Research, Wageningen, The Netherlands, Reprint 25, pp. 453-460.

Walker, G.K. 1983. Measurement of Evaporation from Soil Beneath Crop Canopies. Can. J. Soil Sci. 63:137-141. [Microlysimeter]

Webb, E.K. 1975. Evaporation from Catchments. In: Prediction in Catchment Hydrology, T.G. Chapman and F.X. Dunin (eds.), Aust. Academy of Sci., Canberra, pp. 203-236.

Weeks, E.P. and M.L. Sorey. 1973. Use of Finite-Difference Arrays of Observation Wells to Estimate Evapotranspiration from Ground Water in the Arkansas River Valley, Colorado. U.S. Geological Survey Water-Supply Paper 2029-C, 27 pp.

Weisman, R.N. 1975. Comparison of Warm Water Evaporation Equations. J. Hydraulics Div. ASCE 101(HY10):1303-1313.

Weisman, R.N. and W. Brutsaert. 1973. Evaporation and Cooling on a Lake Under Unstable Atmospheric Conditions. Water Resources Research 9(5):1242-1257.

Wexler, A. 1957. Electric Hygrometers. NBS Circular 586, National Bureau of Standards, Washington, DC.

Wexler, A. (ed.). 1965. Humidity and Moisture, Volumes 1,2,3, and 4. Reinhold, New York, NY.

Wexler, A. and W.G. Brombacher. 1951. Methods of Measuring Humidity and Testing Hygrometers. NBS Circular 512, National Bureau of Standards, Washington, DC.

White, W.N. 1932. A Method of Estimating Ground-Water Supplies Based on Discharge by Plants and Evaporation from Soil: Results of Investigations in Escalante Valley, Utah. U.S. Geological Survey Professional Paper 659-A, 105 pp.

Whiting, D.M. 1975. Use of Climatic Data in Design of Soils Treatment Systems. EPA/600/2-75/018 (NTIS PB-244098), 76 pp.

Whiting, D.M. 1976. Use of Climatic Data in Estimating Storage Days for Soils Treatment Systems. EPA/600/2-76/250 (NTIS PB263-597), 98 pp.

Wilcox, J.C. 1960. Rate of Soil Drainage Following Irrigation: Effects on Determination of Rate of Consumptive Use. Can. J. Soil Sci. 40:15-27. [Water budget methods]

Williams, G.R. 1940. Natural Water Loss in Selected Drainage Basins. U.S. Geological Survey Water-Supply Paper 846, 62 pp.

Williamson, R.E. 1963. The Management of Soil Salinity in Lysimeters. Soil Sci. Soc. Am. Proc. 27:580-583.

Wind Hzn, R. 1958. The Lysimeters in the Netherlands-Description of the Lysimeters with a Review of the Records to 1954. Committee for Hydrological Research, TNO Proceedings and Information No. 3, The Hague, 79 pp.

Winter, T.C. 1981. Uncertainties in Estimating the Water Balance of Lakes. Water Resources Bulletin 17(1):82-115.

Wisler, C.O. and E.F. Brater. 1959. Hydrology, 2nd edition. John Wiley & Sons, New York, NY.

World Meteorological Organization (WMO). 1966. Measurement and Estimation of Evaporation and Evapotranspiration. WMO Technical Note No. 83, WMO, Geneva.

World Meteorological Organization (WMO). 1971. Guide to Meteorological Instrument and Observing Practices, 4th edition. WMO No. 8 TP 3, WMO, Geneva.

World Meteorological Organization (WMO). 1973. Commission for Instruments and Methods of Observation, Abridged Final Report of the Sixth Session, WMO No. 363, WMO, Geneva.

World Meteorological Organization (WMO). 1974. Guide to Hydrological Practices, 3rd edition. WMO No. 168, WMO, Geneva. (1965 edition is titled Guide to Hydrometeorological Practices.)

World Meteorological Organization (WMO). 1975. Technical Regulations. WMO No. 49, WMO, Geneva.

World Meteorological Organization-IASH (WMO-IASH). 1965. Symposium on Design of Hydrological Networks, Vol 2. IASH Publ. 68, IASH, Brussels.

Wunderlich, W.O. 1972. Heat and Mass Transfer Between a Water Surface and the Atmosphere. Water Resources Research Laboratory Report No. 14, Tennessee Valley Authority, Norris, TN, 89 pp. (This report is sometimes cited with TVA as the author.)

Yin, Z.-Y. and G.A. Brook. 1992. Evapotranspiration in the Okefenokee Swamp Watershed: A Comparison of Temperature-Based and Water Balance Methods. J. Hydrology 131:293-312. [Inflow-outflow water budget, Thornthwaite, Blaney-Criddle, Holdridge, and pan evaporation methods]

Young, A.A. 1947. Evaporation from Water Surfaces in California: Summary of Pan Records and Coefficients, 1881-1946. U.S. Dept. Agric. Soil Conservation Service Bull. 54, 68 pp. (Also published as California Public Works Dept. Bull. 54.)

Young, A.A. and H.F. Blaney. 1942. Use of Water by Native Vegetation. Calif. State Div. Water Resources Bull. 50.

Youngs, E.G. 1972. Two- and Three-Dimensional Infiltration: Seepage from Irrigation Channels and Infiltrometer Rings. J. Hydrology 15:301-315.

SECTION 9

VADOSE ZONE SOIL-SOLUTE/GAS SAMPLING AND MONITORING METHODS

Monitoring of soil water in the vadose zone can serve as an early warning system at controlled waste disposal sites that contaminants are entering the subsurface, and can allow actions to be taken before contaminants reach the saturated zone. Methods for sampling and monitoring the vadose zone can be broadly categorized as: (1) **Indirect** (surface geophysical methods and probes that focus on measuring variations in soil salinity), and (2) **direct** (in which soil water is collected directly in the field, or extracted from samples of soil solids).

Indirect Soil Salinity Measurements

A variety of methods are available for locating and monitoring areas of high soil salinity. These methods primarily have been developed for agricultural applications to identify saline soils and control irrigation flows where soluble salts can affect crop productivity. Table 9-1 summarizes information on six indirect methods for monitoring soil salinity. The four-probe electrical method is a direct application of the electrical resistivity surface geophysical method (Section 1.2.1), with electrode configurations that measure near-surface resistivity. The electromagnetic induction sensor is an instrument that is specifically designed to measure conductivity in the near surface. The other indirect methods involve placement of probes or sensors in the subsurface. The main advantage of indirect methods is that data can be collected quickly. The main disadvantages are: (1) Instruments must be calibrated for each soil type by collection of samples where salinity is measured directly to obtain quantitative measurement of soil salinity; and (2) actual chemical constituents that are contributing to soil salinity cannot be determined. The four-probe electrical and porous matrix soil salinity sensors are the most commonly used indirect methods.

Direct Soil Solute Sampling Methods

The U.S. Environmental Protection Agency is placing increasing emphasis on vadose zone soil solute sampling as an early warning system to detect movement of contaminants before they reach the saturated zone (Cullen et al., 1992; Durant et al., 1993). Three major types of soil water can be identified in the context of sampling soil water: (1) **Macropore** or **gravitational** water, which flows through the soil relatively rapidly in response to gravity (excess of 0.1 to 0.2 bars suction); (2) **soil-pore** or **capillary** water, which is held in the soil at negative pressure potentials from around 0.1 to 31 bars of suction; and (3) **hygroscopic** water that is held at tensions greater than 31 bars suction. Soil-pore water moves through the vadose zone, but at much slower rates than gravitational water (see discussion of potential-conductivity relationships in Section 6.3.1), whereas hygroscopic moves primarily in the vapor form. The term **soil solute** or **solution** sampling has been used loosely in the literature to describe most sampling methods, whereas the term **soil pore liquid** is typically used in a more restricted sense (and is so used here) to apply to sampling of capillary water. The chemistry of soil solute sampling methods can differ significantly, depending the method used. Concentrations of inorganic species generally increase as the matric potential increases. In general, ceramic soil suction samplers (which use suctions up to around 0.8 bars) will collect samples that are most representative of the soil solution for the purpose of evaluating contaminant transport.

There are a large number of specific methods by which soil water can be sampled. **Suction** samplers draw water from the soil by applying a vacuum. A variety of **free-drainage** samples collect water percolating through the soil by gravity flow. Other methods include: (1) Use of absorbent materials with retrieval and extraction of water in the laboratory, (2) collection of soil solids with extraction of soil water in the laboratory by a variety of methods, and (3) preparation of a soil saturation extract from a solids sample. Table 9-1 summarizes some information on six types of suction samplers, seven methods of collecting samples by free drainage, and four miscellaneous methods. Table 9-1 also lists collection of soil solids for volatile constituents and soil microorganisms in the vadose zone.

The main advantages of suction samplers is that they are relatively easy to install, and there are essentially no limitations to the depth of sampling when a vacuum-pressure apparatus is used. The main

Table 9-1 Summary Information on Soil Solute Monitoring and Sampling Methods

Method	Sampling Method	Depth Limitation	Chapter Sections
Indirect Salinity Measurement Methods			
Four Probe Electrical	Resistivity	Near surface	9.1.1, 1.2.2
Portable EC Probe	Resistivity	1.5 m	9.1.2
In Situ EC Probe	Resistivity	None	9.1.2
Porous Matrix Salinity Sensors	Resistivity	None	9.1.3
Electromagnetic Induction Sensor	Conductivity	2 m	9.1.4, 1.3.1
Dielectric Sensors	Dielectric	2 m[a]	9.1.4, 6.2.3
Time Domain Reflectometry Sensor	Dielectric	Up to 20 m	9.1.4, 6.2.4
Neutron Probe	Nuclear	None	3.3.3, 6.2.2
Direct Soil Solute Sampling Methods			
Vacuum-Type Porous Cup	Suction	2 m	9.2.1
Vacuum-Pressure Porous Cup	Suction	45 ft	9.2.2
Vacuum High-Pressure Porous Cup	Suction	300 ft	9.2.2
Vacuum-Plate Sampler	Suction	2 m[a]	9.2.3
Membrane Filter	Suction	1-4 m[b]	9.2.4
Hollow Fiber	Suction	2 m[a]	9.2.5
Ceramic Tube Sampler	Suction	2 m[a]	9.2.6
Capillary Wick Sampler	Capillary	[d]	9.2.7
BAT Sampler	Suction	45 ft	5.5.2
Trench Lysimeter	Gravity[c]	[d]	9.3.1
Caisson Lysimeter	Gravity	3 m+	9.3.1
Pan Lysimeter	Gravity	[d]	9.3.1
Glass Block Lysimeter	Gravity	[d]	9.3.1
Wicking Type Sampler	Gravity	[d]	9.3.1
Tile Drain Outflow	Gravity	50+ ft	9.3.1
Perched Water Table	Gravity	None	9.3.2
Nylon Sponge	Absorbent	Near surface	9.3.3
Ceramic Rod	Absorbent	Near surface	9.3.3
Solid Soil Water Extraction	[e]	None	9.3.4
Soil Saturation Extract	Slurry	None	9.3.5
SEAMIST	Absorbent	100s ft	9.3.7
Methods for Sampling Sensitive Soil Constituents			
Static Soil-Gas Sampling	Absorbent	Near Surface	9.4.1
Soil-Gas Probes	Suction	[f]	9.4.2
Tank Leak Sensors	Various	Typically <2m	9.4.3
Soil Volatiles/Microorganisms	Core	[f]	9.3.6

Boldface = Most commonly used methods.

[a]With vacuum sampling apparatus; greater depths would be possible using vacuum-pressure sampling system.
[b]Upper limit would require modification of system to use vacuum-pressure sampling apparatus.
[c]Sample is collected by free-drainage in all gravity samplers, but suction can be used to bring sample to the surface.
[d]Depth limited by the depth to which a hole or trench can be safely dug for installation of sampler in the sidewall; typically 2 meters or less.
[e]Various methods can be used to extract soil water from a sample: Squeezing, displacement, displacement/centrifugation, centrifugation, and adsorption.
[f]Depends on density of subsurface material and method of penetration/coring. Soil gas probes used with cone penetration rigs (Sections 2.2.2, 5.5.1, and 5.5.2) can penetrate 100 to 150 feet with favorable soil conditions; greater depths are possible if holes are drilled before insertion of the soil gas probe. Coring depth limits are defined by the type of drilling/coring method used (Sections 2.3 and 2.4).

disadvantage of suction samplers is that they might not collect representative samples. Sampling for organic chemicals, microorganisms, volatile chemicals, and metals is especially problematic due to potential sorption/interferences by the porous cup. Vacuum-type and vacuum-pressure type porous cup samplers are by far the most commonly used types of suction samplers. The main advantage of free-drainage samplers is that relatively large volumes of water, which is representative of water that is actually percolating to deeper zones, is obtained. The main disadvantages are that installation procedures are time consuming and complex and limited to relatively shallow depths. Trench lysimeters with pan collectors are the most commonly used free-drainage samplers. Figure 9-1a illustrates generic vadose zone monitoring installations for an existing hazardous waste landfill and Figure 9-1b illustrates generic vadose zone monitoring installations for a new surface impoundment. **Capillary wick** samplers (Section 9.2.7) are a relatively new development, which appear to have good potential for collecting more representative samples of soil solutions than either porous cup or free-drainage samplers in the near surface.

Gaseous Phase Characterization

Sampling of soil gases (volatile contaminants or gases such as methane and carbon dioxide, which are indicators of increased microbial activity resulting for organic contaminants) has gained rapid acceptance as a method for preliminary mapping of contaminant plumes in ground water, and monitoring of underground storage tanks. Contaminant plume mapping can be done either by passive sampling, where absorbent collectors are buried for a period of time and retrieved for laboratory analysis (Section 9.4.1), or by using soil-gas sampling probes (Section 9.4.2). Various types of sensors can be used to detect leaks in underground storage tanks (Section 9.4.3). Monitoring of air pressure (Section 9.4.4) and measurement of air permeability (Section 9.4.5) might be required for modeling the transport of contaminants in the vadose zone.

Contaminant Flux

Section 9.5.1 (Solute Flux Methods) briefly describes four methods for estimating the mass transfer of pollutants from the vadose zone to ground water, and Section 9.5.2 (Soil-Gas Flux) describes several methods for estimating soil-gas flux to the atmosphere.

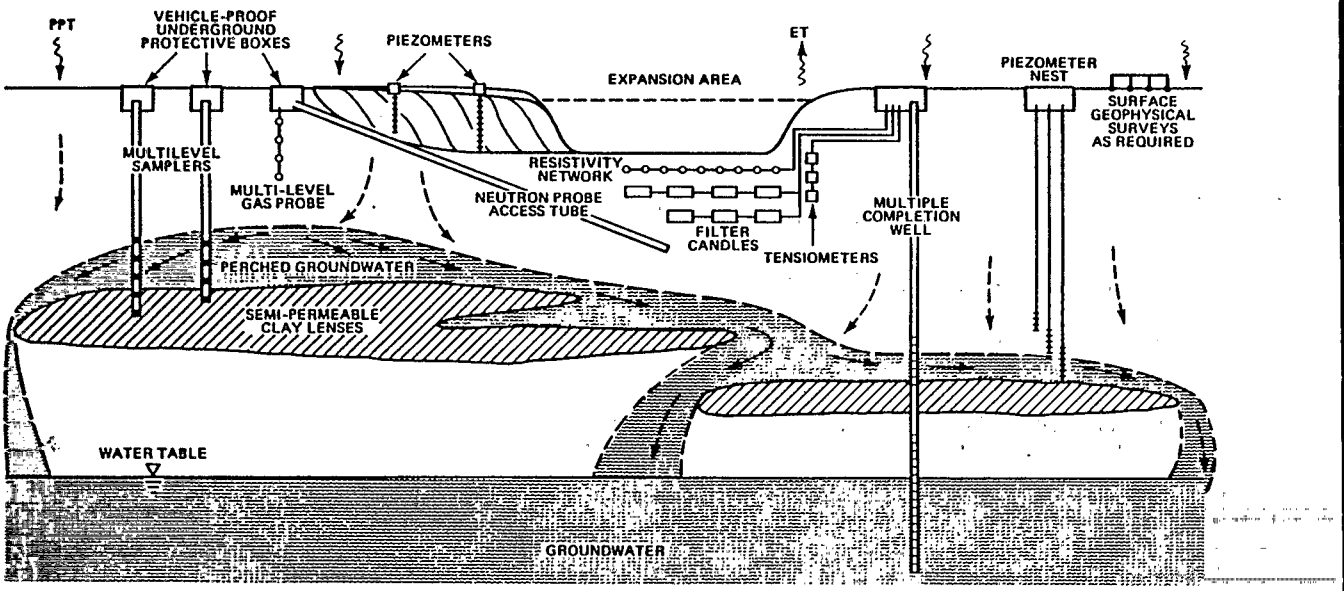

(a)

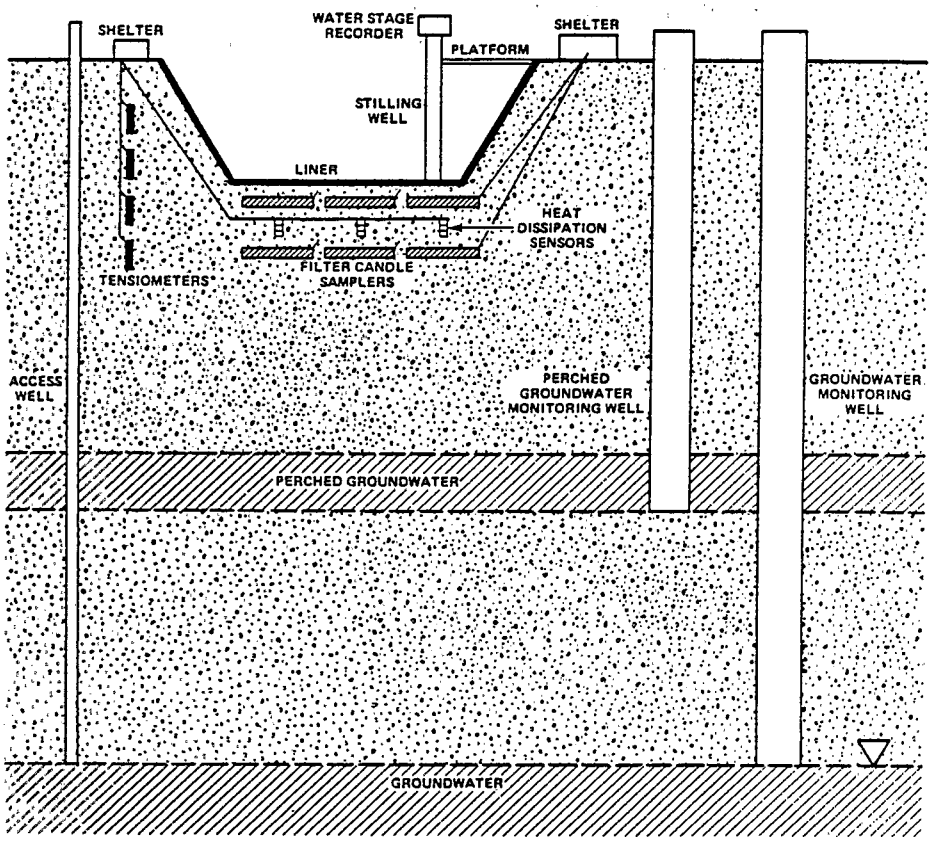

(b)

Figure 9-1 Vadose zone monitoring systems: (a) Generic monitoring design for existing hazardous waste landfill; (b) Water quality monitoring design for a new surface impoundment (Everett et al., 1983).

9. VADOSE ZONE SOIL-SOLUTE/GAS SAMPLING AND MONITORING METHODS

9.1 SOLUTE MOVEMENT (INDIRECT METHODS)

9.1.1 Four Probe Electrical Resistivity

Other Names Used to Describe Method: Four electrode technique/sensors.

Uses at Contaminated Sites: Measuring in situ soil salinity in the shallow vadose zone; locating brine and chloride plumes; estimating water content.

Method Description: A Wenner four probe electrode array (see Section 1.2.1) is used to detect areas of low electrical resistivity (high conductivity) in the soil. For a given soil type, electrical conductivity of the bulk soil and electrical conductivity of the saturation extract from the soil are directly related. Once a calibration curve has been developed (requiring multiple measurements of both soil conductivity and saturation extract conductivity at different locations in a single soil type), soil conductivity measurements can be related to saturation extract conductivity, which in turn can be related to salinity (see references in Table 9-2).

Method Selection Considerations: **Advantages:** (1) Is a nondestructive method (once calibration constants have been calculated); (2) readings are obtained rapidly and inexpensively; (3) is useful for detecting the presence of shallow saline ground water; (4) horizontal variations in salinity can be easily measured by lateral transects; (5) vertical changes in salinity can be evaluated by changing the electrode spacing; and (6) a large volume of soil can be measured compared to other methods. **Disadvantages:** (1) Obtaining calibration relationships can be tedious; (2) accuracy decreases in layered soils; (3) time-series monitoring is difficult due to the requirement of making multiple traverses; (4) is generally limited to shallow depths; (5) does not provide data on specific pollutants; and (6) will not detect pollutants that do not change the electrical conductivity of the subsurface. **Water Content Measurement:** Moisture content can be estimated from four electrode resistivity measurements if salinity, temperature, and bulk density can be quantified, and calibration curves are developed, however, other simpler and more reliable methods generally are used (see Sections 6.2 and 6.3).

Frequency of Use: Commonly used for identification of saline soils in agricultural studies. DC resistivity methods for detecting conductive contaminant plumes in the deeper subsurface are described in Section 1.2.1.

Standard Methods/Guidelines: **Salinity:** Rhoades and Oster (1986); **Water content:** Morrison (1983).

Sources for Additional Information: Everett et al. (1983). See also, Table 9-2.

9. VADOSE ZONE SOIL-SOLUTE/GAS SAMPLING AND MONITORING METHODS

9.1 SOLUTE MOVEMENT (INDIRECT METHODS)

9.1.2 EC Probes

Other Names Used to Describe Method: Four-electrode salinity probe, electrical conductivity probe*, portable salinity probe, burial type salinity probe, four-electrode conductivity cell.

Uses at Contaminated Sites: Obtaining small volume soil salinity measurements.

Method Description: A cylindrical **portable** probe containing electrodes at fixed spacing is attached to a rod with a handle (Figure 9.1.2a). A hole the same diameter as the probe is augered, and resistivity is measured at successive depths. Alternatively, a specially dedicated **burial-type** probe is placed permanently in the ground with a cable running to the surface for periodic measurements (Figure 9.1.2b). Calibration of probes is similar to the calibration method for the four probe electrical method (Section 9.1.1). The **four-electrode conductivity cell** is a variant of this approach, in which and undisturbed soil core is collected using a removable lucite columnar insert in a soil-core sampler. The lucite section is removed from the sampler and segmented to form individual cells. Electrodes are inserted into the soil through threaded holes in the lucite cell walls and resistivity is measured.

Method Selection Considerations: **Advantages:** (1) Salinity changes with depth in stratified soils can be measured; (2) burial probe measurements can be taken at a greater depth than with four electrode method; (3) in-place units allow easy monitoring of changes in salinity with time; (4) are well suited for mapping and diagnosis as well as monitoring; (5) compared to salinity sensor probes, are more versatile, durable, less subject to calibration change, and respond to changes in salinity with less time lag; and (6) can be used to measure different soil volumes. **Disadvantages:** (1) Developing individual calibration relationships for each strata is time consuming and expensive; (2) use is limited to relatively shallow depths; and (3) provide no data on specific pollutants nor will probes detect pollutants that do not change the electrical conductivity of the subsurface.

Frequency of Use: Primarily used for land treatment areas and irrigated fields.

Standard Methods/Guidelines: **Portable probe:** Rhoades and van Schilfgaarde (1976), Rhoades et al. (1977); **Burial probe:** Rhoades (1979).

Sources for Additional Information: Everett et al. (1983). See also, Table 9-2.

*This probe actually measures resistivity, but measurements typically are reported in its reciprocal, conductivity.

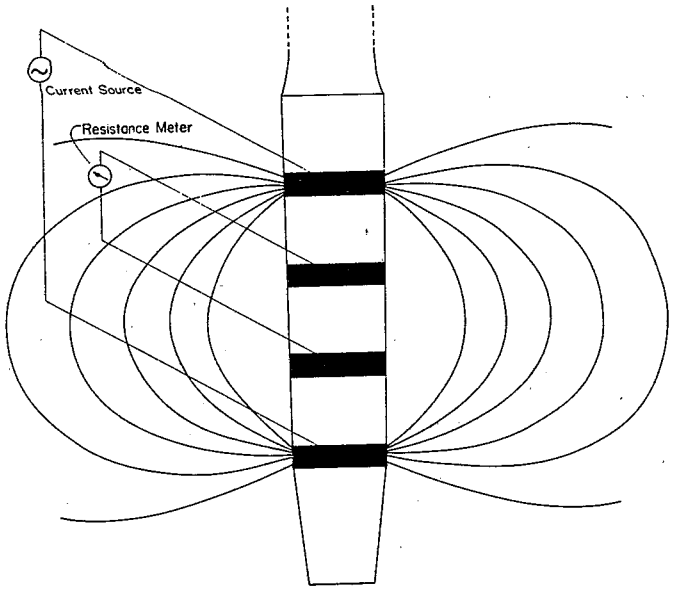

(a)

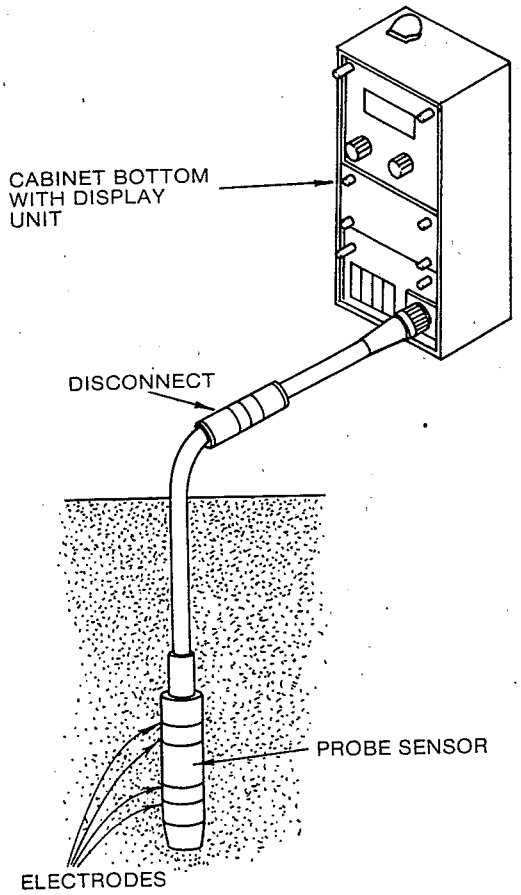

(b)

Figure 9.1.2 Electrical conductivity probes: (a) Schematic illustrating the principle of a soil-salinity probe (Rhoades and van Schilfgaarde, 1976, by permission); (b) Installation of in situ soil salinity sensor (Morrison, 1983).

9. VADOSE ZONE SOIL-SOLUTE/GAS SAMPLING AND MONITORING METHODS

9.1 SOLUTE MOVEMENT (INDIRECT METHODS)

9.1.3 Porous Matrix Salinity Sensors

Other Names Used to Describe Method: Ceramic salinity sensors, in situ salinity sensors.

Uses at Contaminated Sites: Monitoring soil salinity; determining dispersion coefficients from salinity gradients and evapotranspiration; measuring water content measurement.

Method Description: Electrodes and thermistors embedded in porous ceramic are placed in the soil. Many types of sensors have been developed. Figure 9.1.3a illustrates a cylindrical sensor, and Figure 9.1.3b a square salinity sensor. The specific conductance is measured when the soil solution equilibrates with the ceramic. As with the four probe electrical and EC probe, calibration curves that relate signal to salinity and/or water content must be developed to relate conductivity readings to salinity. Temperature also must be measured and used to develop calibration relationships.

Method Selection Considerations: Most suitable for land treatment areas and irrigated fields. Could be installed below ponds before they are filled with water. **Advantages:** (1) Are simple, easily read and sufficiently accurate for salinity monitoring; (2) readings are taken at same depth and location each time; (3) vertical migration of saline water can be monitored by installing units at different depths; and (4) output can be interfaced with data acquisition systems. **Disadvantages:** (1) Are more subject to calibration changes than the four-electrode method; (2) are more expensive and less durable than four-electrode method; (3) time lag in response to changing salinity can be several days; (4) cannot be used at soil-water pressures less than about -2 bars; (5) soil disturbance during installation can affect results (salinity readings will be lower compared to undisturbed soil if disturbed soil has greater leaching due to increased permeability); and (6) does not provide data on specific pollutants.

Frequency of Use: Commonly used in agricultural research where continuous monitoring of soil salinity is required.

Standard Methods/Guidelines: Rhoades and Oster (1986), Richards (1966).

Sources for Additional Information: Morrison (1983). See also, Table 9-2.

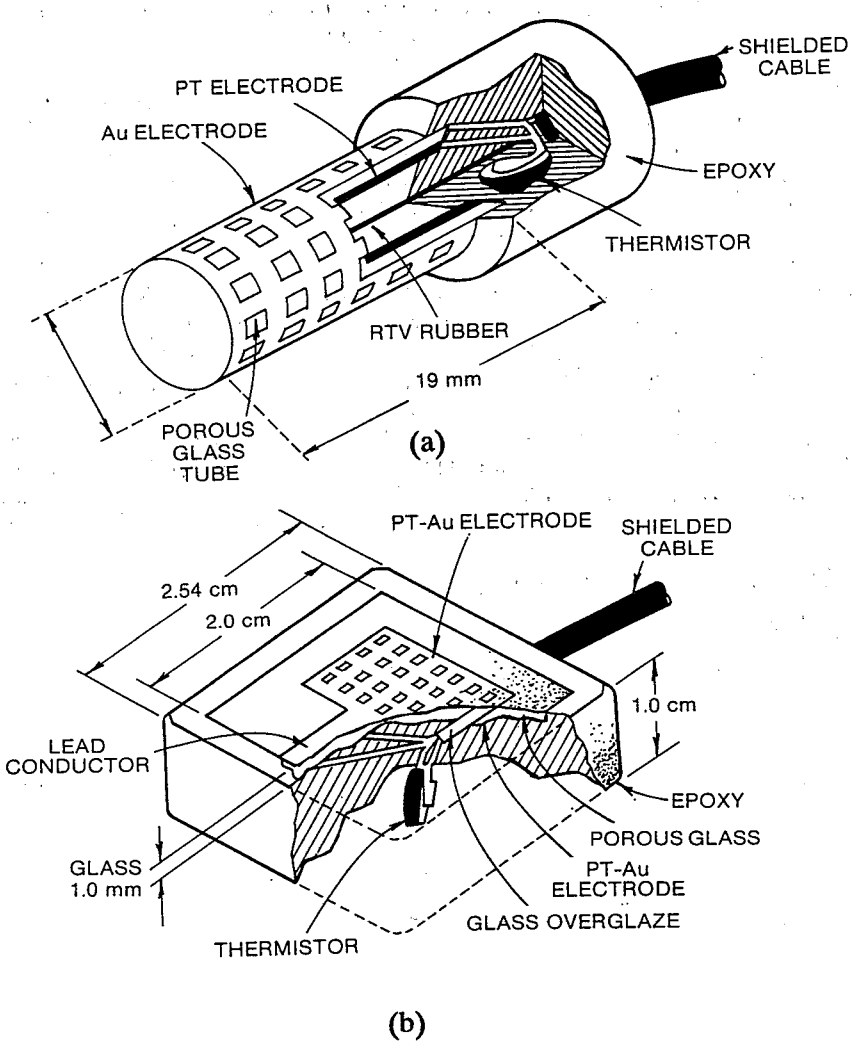

Figure 9.1.3 Soil salinity sensors: Cylindrial (a); Square (b) (Morrison, 1983, after Enfield and Evans, 1969, by permission).

9. VADOSE ZONE SOIL-SOLUTE/GAS SAMPLING AND MONITORING METHODS

9.1. SOLUTE MOVEMENT (INDIRECT METHODS)

9.1.4 Electromagnetic Sensors

Other Names Used to Describe Method: Electromagnetic induction sensor, inductive electromagnetic soil conductivity meter, soil conductivity sensor, EM soil salinity sensor, time domain reflectometry (TDR)/dielectric sensors.

Uses at Contaminated Sites: Monitoring soil salinity.

Method Description: The EM soil salinity sensor uses the principles of electromagnetic induction (see Section 1.3.1) to measure electrical conductivity in the soil rooting zone (1 to 2 meters). EM instruments are designed for measurement of conductivity of the near surface. **Dielectric** sensors (Section 6.2.3) and **time domain reflectometry** (Section 6.2.4) measure the dielectric properties of the subsurface using probes that transmit and receive electromagnetic signals.

Method Selection Considerations: **EM Soil Salinity Sensor Advantages:** (1) Equipment is very portable and easy to use; (2) direct contact with the ground is not necessary; and (3) continuous measurements are possible. **EM Soil Sensor Disadvantages:** Depth of penetration is limited to 1 to 2 meters. **Time Domain Reflectometry** has the advantage of allowing measurement of both moisture content and electrical conductivity (see Section 6.3.4 for additional discussion of advantages and disadvantages).

Frequency of Use: EM soil salinity sensors are used primarily for agricultural applications for measuring salinity of the soil rooting zone and locating saline seeps. TDR sensors are relatively new but have gained rapid acceptance.

Standard Methods/Guidelines: --

Sources for Additional Information: **Salinity sensors:** See Table 9-2. **TDR:** Kachonoski et al. (1992); see also, references listed in Table 6.3.

9.2 DIRECT SOIL-SOLUTE SAMPLING (SUCTION METHODS)

9.2.1 Vacuum-Type Porous Cup

Other Names Used to Describe Method: Suction/soil lysimeter, tension lysimeter, soil-water extractors

Uses at Contaminated Sites: Sampling of soil pore liquids in the vadose zone to characterize contaminated sites or provide early warning of break-through of pollutants at controlled disposal sites.

Method Description: A porous cup or plate (usually ceramic but other materials, such as alundum, fritted glass, and nylon can be used*) is attached to a small diameter tube (usually PVC), which is placed in the soil, making sure that there is good contact with the soil material. A one-hole rubber plug is placed in the other end of the tube and small diameter tubing beginning at the base of the ceramic cup runs through the hole to the surface (Figure 9.2.1a). A vacuum is applied to the small tubing and the soil solution is drawn into a small flask. Tensiometers (Section 6.1.1) can be installed in the vicinity to determine that amount of suction that should be applied during sampling. Figure 9.2.1b illustrates the use of vacuum-type porous cup lysimeters in a **barrel lysimeter.** A purge-and-trap device at the surface (Figure 9.2.1c) can be used for collection of volatiles from suction samplers.

Method Selection Considerations: **Advantages:** (1) Allows direct sampling of soil water; (2) successive samples can be obtained from the same depth; (3) is inexpensive and simple; and (4) can be installed below shallow impoundments and landfills prior to construction for monitoring of seepage when the facility is operating. **Disadvantages:** (1) Generally is limited to depths less than 6 feet; (2) is limited to soil water pressure less than air entry value of the cups (-1 atmosphere or -30 kPa), so will not work in very dry or frozen soils; (3) small volumes sampled might not be representative; (4) only samples pore water, water moving through cracks and macropores might have different chemical composition (can be overcome by also using zero suction samplers [Section 9.3.1]); (5) suction might affect soil-water flow patterns, so installation of tensiometers is required to determine the correct vacuum to apply; (6) samples might not be representative of pore water because method does not account for relationships between pore sequences, water quality and drainage rates; (7) contact between cup and soils difficult to maintain in very coarse textured soils, such as gravels, and exposure to freeze-thaw might break contact with soil; (8) cup might be plugged by solids or bacteria; (9) chemistry of solute might be altered in passage through cup (sorption of metals, ammonia, chlorinated hydrocarbons); (10) PTFE cups have relatively limited operational ranges (up to 7 centibars); (11) dead space, where fluid in the cup is not brought to the surface, might occur if the discharge tube hangs up on the lip of the cup during installation, and some PTFE samplers have a permanent dead space; (12) generally is not suitable for bacterial sampling due to screening and adsorption; and (13) heavy metals might be sorbed on the porous-cup matrix.

Frequency of Use: Very common where near-surface sampling is required.

Standard Methods/Guidelines: ASTM (1992).

Sources for Additional Information: See Table 9-3.

*Teflon also has been used as a material for suction lysimeters, but is not currently recommended because of problems with low bubbling pressure (ASTM, 1992).

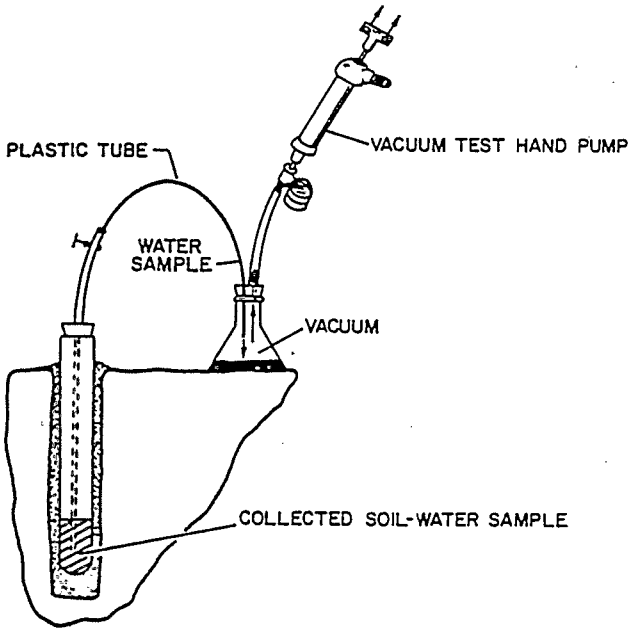

(a)

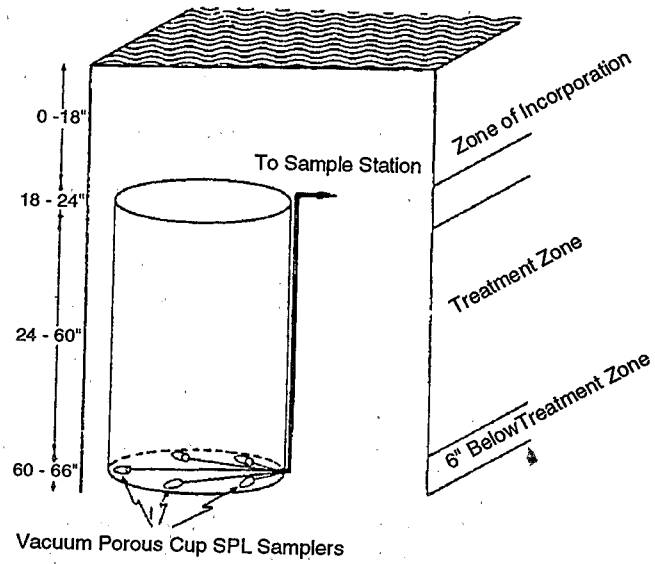

(b)

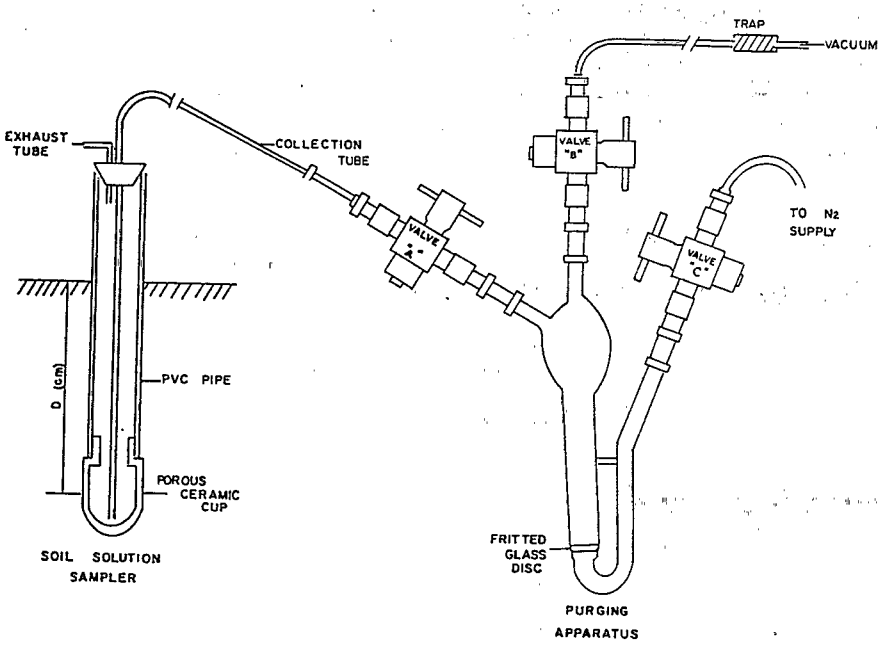

(c)

Figure 9.2.1 **Vacuum-type porous cup lysimeters: (a) Conventional system (Everett et al., 1983); (b) A barrel lysimeter with vacuum porous cup samplers installed within a hazardous waste land treatment facility (Hornby et al., 1986, by permission); (c) System for sampling volatile organics in soil water (Scalf et al., 1981).**

9.2.2 Vacuum-Pressure Type Porous Cup

Other Names Used to Describe Method: Suction/soil lysimeter, high pressure-vacuum type porous cup sampler, deep pressure vacuum lysimeter, ceramic points.

Uses at Contaminated Sites: Sampling of soil pore liquids in the vadose zone to characterize contaminated sites or provide early warning of break-through of pollutants at controlled disposal sites.

Method Description: **Vacuum-pressure type:** Similar to vacuum type porous cup, except that a second line is placed in the porous-cup-tipped tube, which ends just below the stopper. The shorter line is connected to a pressure-vacuum source. When the unit is in place, a vacuum is applied to draw soil water into the sampler. Then pressure is applied to push the sample into the flask. Figure 9.2.2a illustrates installation of two vacuum pressure lysimeters in the same hole at two levels. The **high pressure-vacuum** type sampler is similar to the vacuum-pressure type device, except that the sampler is divided into two chambers connected by the line with a one-way valve (Figure 9.2.2b). When vacuum is applied, the soil solute is pulled into the upper chamber. When pressure is applied to drive the sample into the container at the surface, the one-way valve prevents any of the sample from being pushed out the porous cup. Nightingale et al. (1985) have developed a pressure vacuum-type sampler suitable for both saturated and unsaturated conditions that uses a standpipe rather than a check valve to keep the sample from being forced back into the soil when pressure is applied. With modifications, conventional ceramic porous-cup soil-solution samplers can be used to sample volatile organic compounds in the soil solution (Wood et al., 1981 [see Figure 9.2.1c]).

Method Selection Considerations: In most cases, ceramic vacuum-pressure lysimeters will be the method of choice. **Advantages:** All the same advantages of the vacuum-type sampler (Section 9.2.1), plus: (1) Can be used at depths below the suction lift of water (down to 50 feet for vacuum-pressure type and down to 300 feet for high pressure-vacuum type); and (2) several units can be installed in the same borehole for sampling soil water at different depths. **Disadvantages:** Same as for vacuum-type sampler (Section 9.2.1) plus: Some solution is forced back through the walls of the cup when pressure is applied. The high pressure-vacuum type sampler overcomes this problem.

Frequency of Use: Probably the most commonly used method for soil-solute sampling.

Standard Methods/Guidelines: ASTM (1992), Everett (1990), Rhoades and Oster (1986), U.S. EPA (1986).

Sources for Additional Information: See Table 9-3.

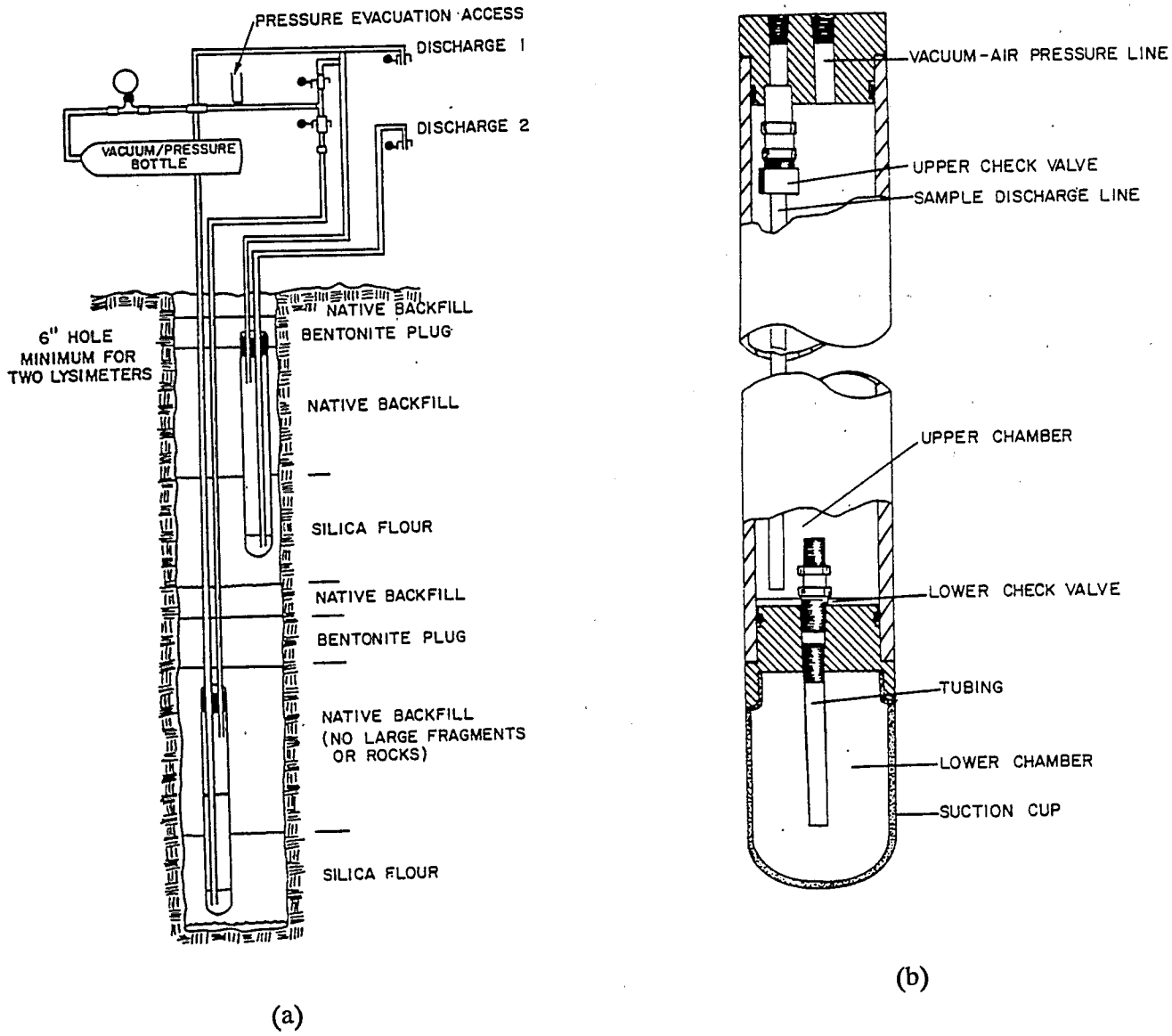

Figure 9.2.2 **Vacuum-pressure lysimeters: (a) Clustered vacuum-pressure suction cup lysimeters in a single borehole (Everett et al., 1983, after Hounslow et al., 1978); (b) High pressure-vacuum suction cup sampler (Everett et al., 1983).**

9.2 DIRECT SOIL-SOLUTE SAMPLING (SUCTION METHODS)

9.2.3 Vacuum-Plate Samplers

Other Names Used to Describe Method: Alundum tension plate.

Uses at Contaminated Sites: Sampling of soil pore liquids in the vadose zone to characterize contaminated sites or provide early warning of break-through of pollutants at controlled disposal sites.

Method Description: Principles are the same as porous cup samplers (Sections 9.2.1 and 9.2.2) except the geometry of the porous material is different. The vacuum plate consists of an Alundum or ceramic disc (range from 4.3 to 25.4 centimeters in diameter) attached to an extraction vacuum extraction tube (Figure 9.2.3). Installations reported in the literature use a vacuum sampling apparatus, but a vacuum-pressure system (Section 9.2.2) could be used as well. Installation is similar to that described in Section 9.3.1 for trench lysimeters.

Method Selection Considerations: Advantages and disadvantages essentially are the same as for porous cup suction samplers (Section 9.2.1 and 9.2.2) with the added advantage that a large sample volume can be obtained without disrupting adjacent flow pattern, and the added disadvantage that trench installation procedures are more complicated

Frequency of Use: Uncommon.

Standard Methods/Guidelines: ASTM (1992).

Sources for Additional Information: See Table 9-3.

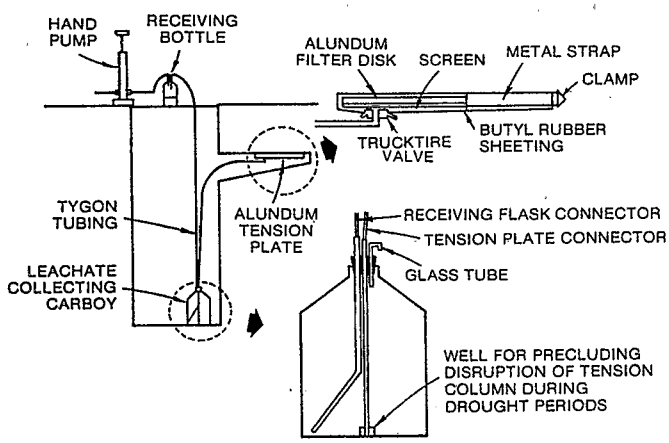

Figure 9.2.3 Vacuum-plate lysimeter (Morrison, 1983, after Cole, 1958, by permission).

9.2.4 Membrane Filter

Other Names Used to Describe Method: --

Uses at Contaminated Sites: Sampling of soil pore liquids in the vadose zone to characterize contaminated sites or provide early warning of break-through of pollutants at controlled disposal site.

Method Description: A membrane filter (polycarbonate or cellulose acetate) and a glass fiber prefilter are mounted in a Swinnex-type filter holder (used for filtration of fluids delivered by a syringe [see Figure 9.2.4a]). Installation involves digging a hole to the desired depth (up to 4 meters), and placing glass fiber collectors in the bottom of the hole (Figure 9.2.4b). Glass fiber discs that fit within the filter holder are placed on the fiber collectors and provide a wicking action between the collectors and the filter holder assembly (Figure 9.2.4c). The filter holder is placed in the hole, making sure that the glass fiber prefilter in the holder is in contact with the "wick" discs. The hole is then backfilled. The sample is drawn through a flexible tube attached to the filter holder using suction. The prototype (Stevenson, 1978) has been used at depths to 1 meter using suction apparatus similar to vacuum-type porous cup samplers (Section 9.2.1). Theoretically, installation could be as deep as 4 meters using a vacuum-pressure type apparatus for fluid collection.

Method Selection Considerations: **Advantages:** (1) Membrane filter is better for determining phosphorus concentrations than porous cup samplers; (2) samples are less susceptible to being drawn back into the soil when soil-moisture tension exceeds the vacuum in the sampler; (3) can be manufactured from inexpensive, readily available materials; (4) the wick-collector system provides contact with a relatively large soil area; and (5) satisfactory sampling rates can be maintained even when parts of the collector sheet become blocked by fine particles. **Disadvantages:** (1) Installation procedure is more complex than for porous-cup sampler; (2) under very dry soil conditions, the membrane dries out and rapid vacuum loss occurs; (3) depending on the membrane filter composition and manufacturer, a variety of contaminants, such as nitrogen, carbon particulate matter, and sodium, might be contributed to samples (thorough rinsing with distilled water can minimize these contributions); and (4) clogging by biofilm growth is a problem on cellulose acetate membranes (can be controlled, in part, with treatments of silver nitrate and sodium chloride).

Frequency of Use: Uncommon.

Standard Methods/Guidelines: ASTM (1992), Stevenson (1978).

Sources for Additional Information: See Table 9-3.

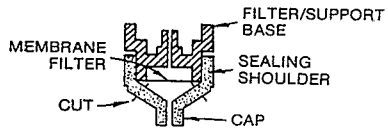

Preparation of "Swinnex" type filter holder for suction sampler.

(a)

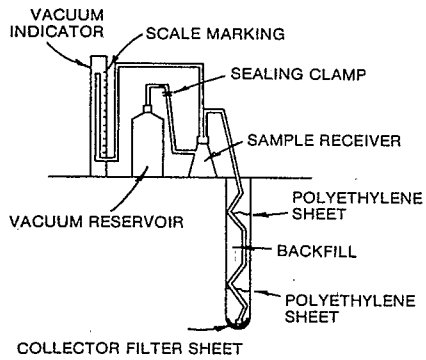

Installed sampler, sample receiver, and vacuum indicator.

(b)

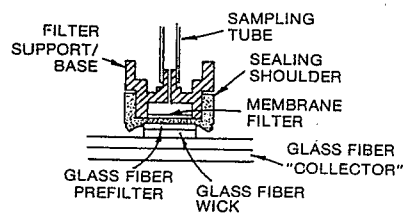

Installation of suction sampler showing glass fiber "wick" and "collector" arrangement.

(c)

Figure 9.2.4 Membrane filter sampler: (a) Preparation of Swinnex type filter holder; (b) Installation set-up; (c) Sampler; (Morrison, 1983, after Stevenson, 1978, by permission).

9.2.5 Hollow Fiber

Other Names Used to Describe Method: Cellulose-acetate hollow fiber sampler, hollow fiber filters.

Uses at Contaminated Sites: Sampling of soil pore liquids in the vadose zone to characterize contaminated sites or provide early warning of break-through of pollutants at controlled disposal sites.

Method Description: To date, this method has been applied only to soil cores and blocks in the laboratory. Bundles of semipermeable fibers (cellulose-acetate, or hollow fibers produced from a noncellulosic polymer solution) are installed vertically or horizontally (Figure 9.2.5) in a soil core by inserting them down a thin diameter (0.3 centimeter) metal tube. Once the fibers have been pushed into the core, the tube is withdrawn. The fibers also can be placed in a perforated length of PVC tubing that is pushed into place. The hollow fibers are attached to a vacuum pump and suction is applied (based on readings from separately installed tensiometers) to collect the soil solution.

Method Selection Considerations: Not recommended for use in the field at this time due to lack of field testing (Everett, 1990). **Advantages:** (1) The fibers used have been designed to function as molecular sieves, allowing more precise selection of pore size (macrosolute rejection levels from 500 to 300,000 molecular weight); (2) installing hollow fibers for solute sampling from laboratory core studies requires less disturbance than porous ceramic cup samplers; and (3) encasing a fiber bundle within a perforated plastic tube allows installation of a sampling unit along a long horizontal axis. **Disadvantages:** (1) Horizontal installation is difficult in the field; (2) cellulose acetate fibers might screen nitrate-nitrogen, phosphorus, and potassium; (3) biological clogging of fibers is a potential problem; (4) suitability for sampling metal and organic contaminants has not been evaluated; and (5) has a narrow operating range (20 to 50 centibars) because large pore diameters result in low bubbling pressure.

Frequency of Use: Uncommon.

Standard Methods/Guidelines: --

Sources for Additional Information: See Table 9-3.

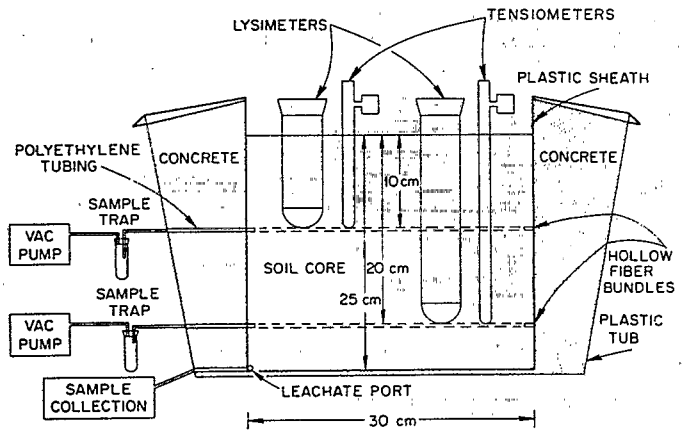

Figure 9.2.5 Schematic of experimental hollow fiber sampling system (Levin and Jackson, 1977, by permission).

9.2.6 Ceramic Tube Sampler

Other Names Used to Describe Method: Ceramic filter candle, vacuum (trough) extractor.

Uses at Contaminated Sites: Sampling soil pore liquids in the rooting zone.

Method Description: The sampling device is similar to the vacuum-type porous cup sampler, except that a porous ceramic candle (around 12 inches long and 1 inch in diameter) is used instead of a porous cup. Installation requires excavation of a vertical trench to below the depth of the rooting zone to provide a work area, as well as further excavation of a horizontal cavity at the desired depth of sampling. The filter candle assembly is placed horizontally in a galvanized sheet metal trough that has the approximate dimensions of the horizontal cavity (Figure 9.2.6). The trough is filled with soil and the assembly is placed in the horizontal hole. Contact with the soil above the trough is ensured by the use of an air pillow or mechanical jack. Sampling is accomplished by using a separately installed tensiometer to measure soil-water tension, and using a vacuum in the system to induce soil-water flow into the trough and candle at the same rate as the surrounding soil. A small diameter tube attached to the other end of the filter candle and extending to the work area in the vertical trench allows rewetting, if necessary.

Method Selection Considerations: **Advantages:** (1) Allows direct sampling of soil water; (2) successive samples can be obtained from the same depth; and (3) samples both pore water and water flowing through macropores that is intercepted by the trough. **Disadvantages:** The same as for vacuum-type porous cup samplers, except that disadvantages 4 and 6 do not apply, and the added disadvantage of being more difficult to install.

Frequency of Use: Uncommon, has mainly been used for sampling of irrigation return flow.

Standard Methods/Guidelines: Duke and Haise (1973).

Sources for Additional Information: See Table 9-3.

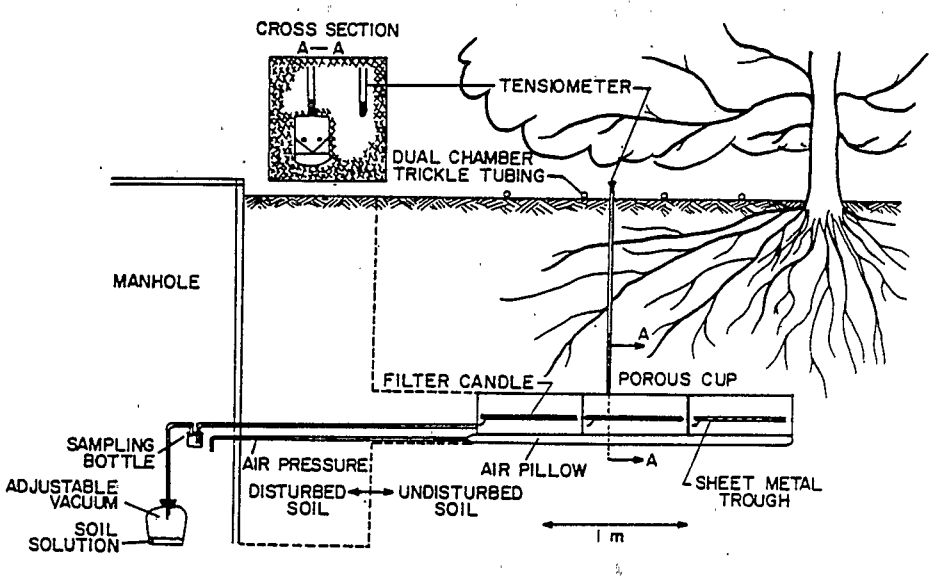

Figure 9.2.6 Filter candle sampling setup (Everett et al., 1983, after Hoffman et al., 1978).

9.2.7 Capillary Wick Sampler

Other Names Used to Describe Method: --

Uses at Contaminated Sites: Soil pore liquid sampling.

Method Description: Capillary wick samplers combine elements of the pan lysimeter (Section 9.3.1) and hollow fiber samplers (Section 9.2.5). A pan with a glass cloth is inserted in the soil below the soil column to be sampled (Figure 9.2.7). Lengths of fiberglass wick are placed in contact with the absorbent material in the pan and suspended vertically over a sampling bottle. When wetted, the wicks apply a continuous tension to the soil pore water equivalent to the wick length (up to -6.0 kPa). The collection chamber can be buried and samples periodically collected through a tube to the surface using a suction sampler (Figure 9.2.7), or the collection bottle can be accessed through a trench installation as with pan lysimeters (Figure 9.3.1a).

Method Selection Considerations: **Advantages:** (1) Continuous solute samples can be obtained from unsaturated soil without applying suction, minimizing possible affects on volatile contaminants (trench installations); and (2) samples might be more representative of water moving through the soil than samples collected by suction samplers or free-drainage samplers because they can collect soil water from both saturated and unsaturated pores. **Disadvantages:** (1) Installation is somewhat more complex than for free drainage samplers (Section 9.3.1); (2) solute characteristics might be altered as the solute travels up the wick; (3) is limited to relatively shallow installations (generally 2 meters or less in undisturbed soil); and (4) only custom-built, experimental samplers have been tested to date.

Frequency of Use: Relatively new method that has not been widely tested.

Standard Methods/Guidelines: --

Sources for Additional Information: See Table 9-3.

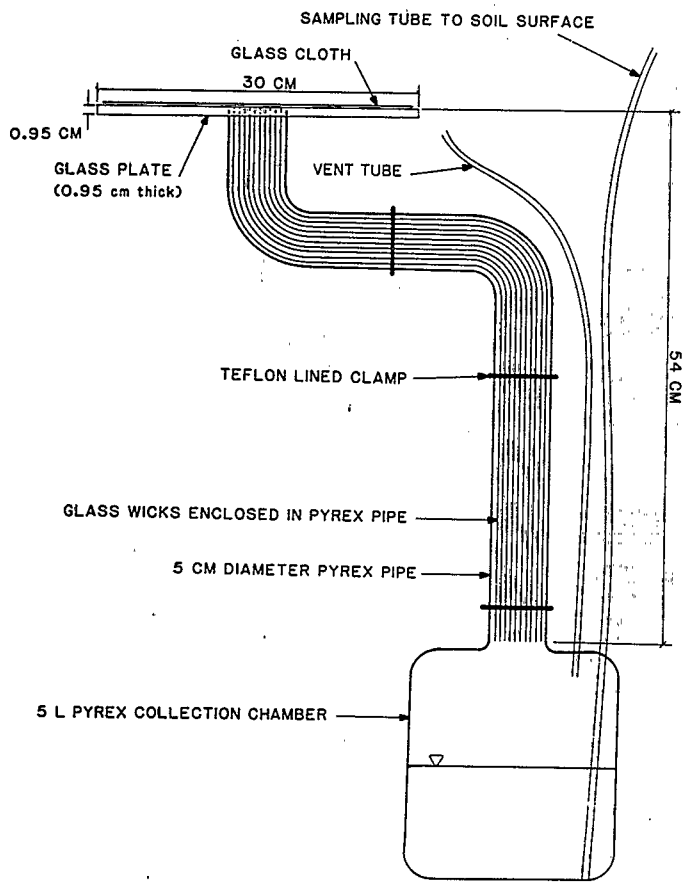

Figure 9.2.7 **Schematic diagram of a capillary wick unsaturated zone soil pore water sampler (Holder et al., 1991, by permission).**

9.3 DIRECT SOIL-SOLUTE SAMPLING (OTHER METHODS)

9.3.1 Free-Drainage Samplers

Other Names Used to Describe Method: Zero-tension samplers, tension-free lysimeter, pan lysimeter, collection lysimeter/manifold collector, trench lysimeter, caisson lysimeter, free-drainage glass block sampler, pan-type collectors, wicking-type sampler.

Uses at Contaminated Sites: Sampling water percolating through the vadose zone; measuring hydraulic conductivity/solute flux.

Method Description: Free-drainage samplers, which intercept and collect water flowing in saturated pores or fractures for delivery to a sample container, are installed in the soil, commonly at depths of interest in the side of a trench or buried culvert. Two major types of installations are possible: (1) **Open trench** or **caisson** (Figures 9.3.1a and b respectively), in which permanent access exists and in which samples are usually collected by simple gravity feed, and (2) **buried trench,** in which the access trench is backfilled after installation and samples are brought to the surface using a suction method (Figure 9.3.1c). Various designs have been developed, including stainless steel troughs, sand-filled funnels, and hollow glass blocks. Geotextile fabric can be used for wicking action. In each case, gravity drainage creates a slightly positive pressure at the soil-sampler interface, allowing the soil water to drip into the sampler. The collection of ground-water outflow from **tile drains** is another way to obtain samples that have recently moved from the vadose zone to the saturated zone. A variant in the tile drain collection method is a **collection lysimeter,** also called a **manifold collector,** installed at the based of a sanitary landfill to collect leachate (Figure 9.3.1d).

Method Selection Considerations: **Advantages:** (1) A larger volume of soil can be sampled compared to suction samplers, and the defined surface area might allow quantitative estimates of leachate flux; (2) samples include water moving through both large and small pores and are representative of the soil solute that is actually percolating to greater depths without disturbing natural flow patterns; (3) have less possibility of chemical alteration or loss of volatile compounds from the sample compared to porous-cup samplers; and (4) sampling is continuous without the need for externally applied vacuum. **Disadvantages:** (1) Installation procedures are time-consuming and complex; (2) samples will not be collected unless gravity flow is occurring; (3) installation under impoundments generally is not feasible; (4) if collection surfaces are not installed perfectly level, a sump or collection area can result in dead space where the soil water cannot be removed; (5) if the collection surface is uneven, the potential exists for cross contamination from residual samples; and (6) safety considerations might limit the depth to which trench lysimeters can be installed. **Tile Drain/Collection Lysimeter Advantages:** Existing tile drains require no installation, and manifold collectors are relatively easy to install where new landfill pits are excavated. **Tile Drain/Collection Lysimeter Disadvantages:** (1) NAPLs might not appear in tile drain outflow because they remain above the drain (light NAPLs) or might flow along the bottom of the perched water zone (dense NAPLs); (2) is limited to shallow depth for economic reasons; and (3) the presence of air in the tile lines might alter the chemistry of water flowing into the drain.

Frequency of Use: Relatively uncommon.

Standard Methods/Guidelines: ASTM (1992).

Sources for Additional Information: **Wicking-type sampler:** Hornby et al. (1986); **Trench pan lysimeter:** U.S. EPA (1986); **Pan lysimeter with tension plate:** Shaffer et al. (1979); **Free-drainage glass-block sampler:** Everett (1990); **Collection lysimeters:** Sai and Anderson (1991). See also, Table 9-3.

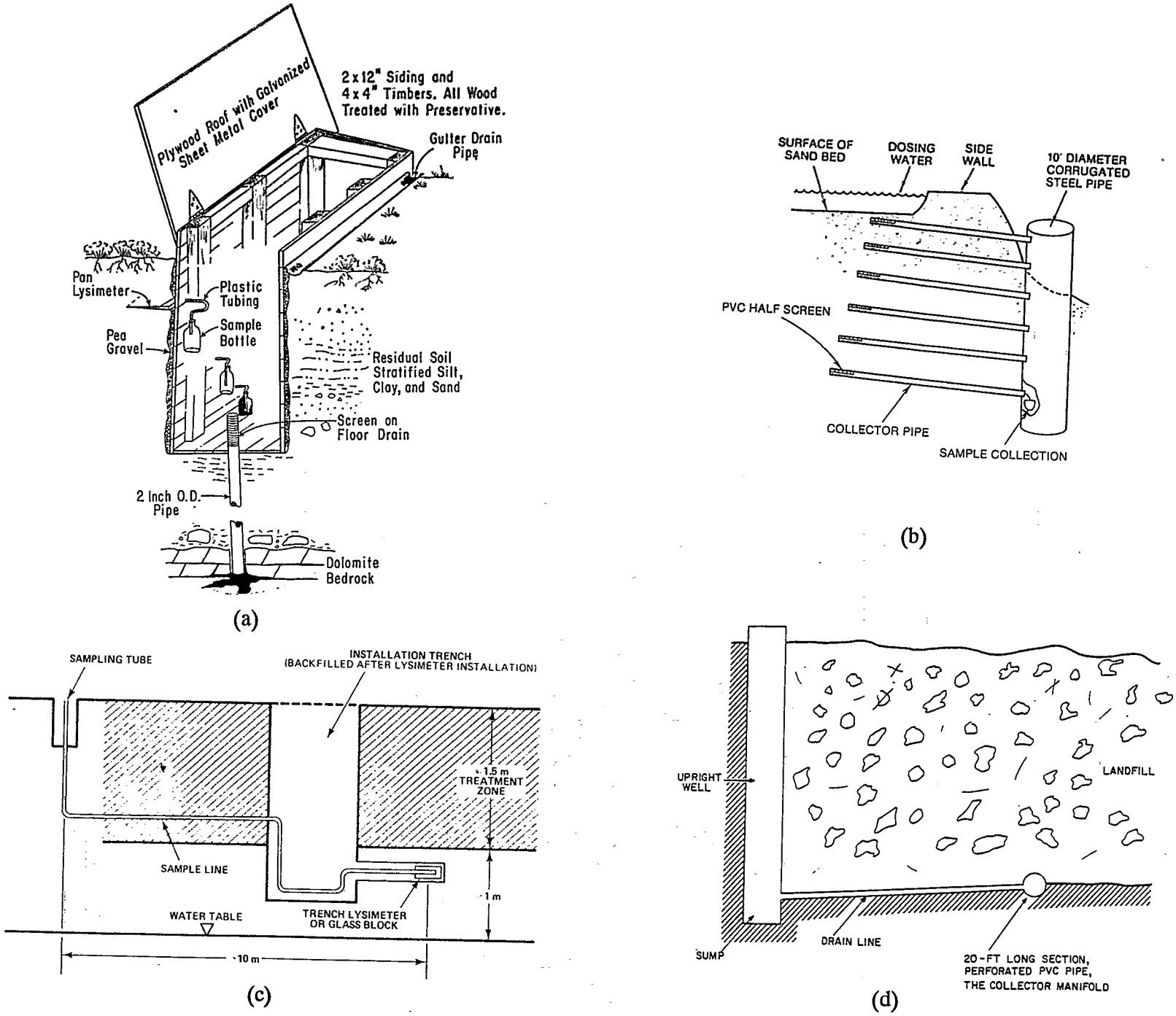

Figure 9.3.1 Free-drainage sampler installations: (a) Trench lysimeter (Parizek and Lane, 1970, by permission); (b) Caisson lysimeter (Morrison, 1983, after Aulenbach and Clesceri, 1980, by permission); (c) Pan lysimeter installation (U.S. EPA, 1986); (d) Leachate collector installed at base of sanitary landfill (Everett et al., 1983).

9.3 DIRECT SOIL-SOLUTE SAMPLING (OTHER METHODS)

9.3.2 Perched Water Table

Other Names Used to Describe Method: --

Uses at Contaminated Sites: Characterizing and monitoring vadose zone soil pore liquid.

Method Description: Perched ground water is sampled as representative of water that has percolated through the vadose zone. For shallow perched ground water, samples can be obtained by installing wells (Figure 9.3.2a), piezometer nests (Section 5.4.3), or multilevel samplers (Section 5.6.1), or by installing a tile drainage system and sampling at the outlet. Deeper perched ground water can be obtained by sampling cascading water in existing wells, or by constructing special wells (Figure 9.3.2b). Wells or piezometers screened in perched aquifers are sampled using the appropriate portable ground-water sampling device (see Section 5).

Method Selection Considerations: **Advantages:** (1) Larger sample volumes are obtained compared to suction and extraction methods (particularly desirable when sampling for organics and viruses); (2) samples are more representative than point samples obtained by suction and extraction methods, because they reflect the integrated quality of water draining from the overlying vadose zone; (3) is cheaper than installing deep wells with batteries of suction samplers; (4) can be located near ponds and landfills without concern about causing leaks; and (5) nested piezometers and multilevel samplers can be used to delineate the vertical and lateral extent of plumes and hydraulic gradients (see Sections 5.4 and 5.6). **Disadvantages:** (1) Perched zones must be present in the area of concern; (2) detection of perched water deep in the subsurface can be expensive, requiring test wells or geophysical methods; (3) some perched ground water is seasonal and might dry up (backup systems, such as described by Nightingale et al. [1985], are recommended in this situation [see Section 9.2.2]); (4) is most suitable for diffuse sources, such as land spreading areas or irrigated fields; and (5) multilevel sampling is restricted to shallower depths where vacuum pumping is possible.

Frequency of Use: Commonly used, if perched water table is present.

Standard Methods/Guidelines: **Sampling from cascading wells:** Wilson and Schmidt (1978).

Sources for Additional Information: Everett et al. (1983). See also, Table 9-3.

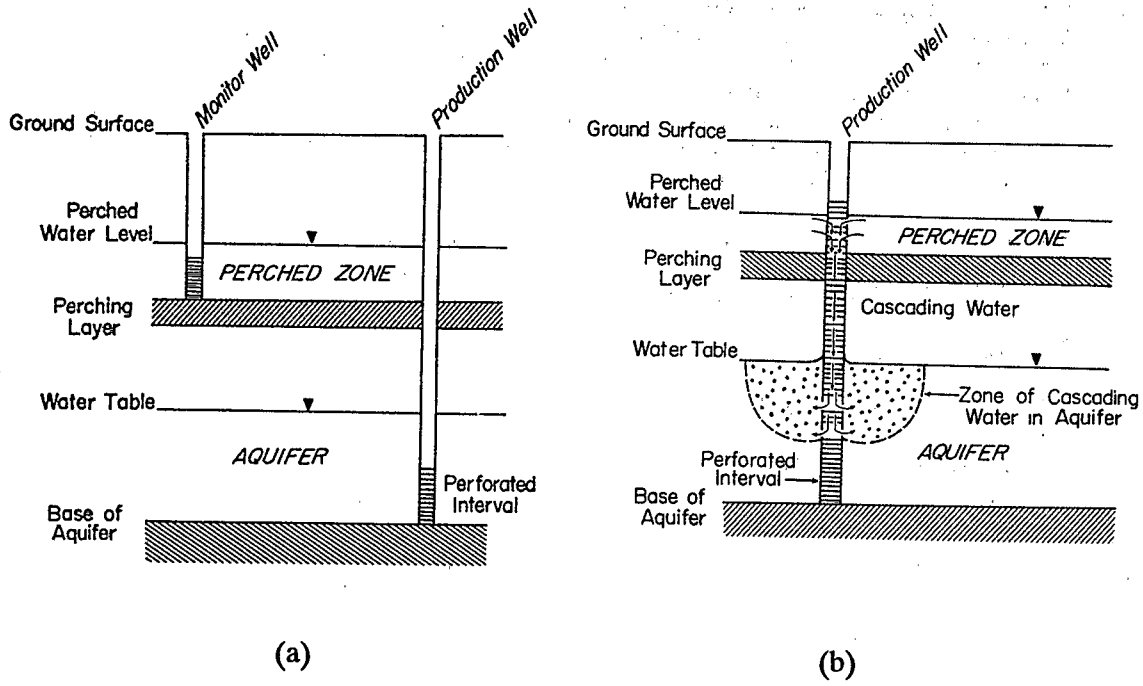

Figure 9.3.2 Perched water table sampling: (a) Well in perched water table; (b) Cascading water in an idle well (Wilson and Schmidt, 1978, by permission).

9.3 DIRECT SOIL-SOLUTE SAMPLING (OTHER METHODS)

9.3.3 Absorbent Methods

Other Names Used to Describe Method: Cellulose nylon sponge, ceramic rods or points.

Uses at Contaminated Sites: Collecting of soil pore liquids in the vadose zone.

Method Description: Absorbent methods use the ability of a porous material to absorb soil pore water. **Cellulose nylon sponge:** A sponge is place within a trough, which is positioned against the ceiling of a horizontal tunnel by a series of three-lever hinges. When the sponge has absorbed a certain volume of pore water, the trough is withdrawn and the sponge is placed in a moisture-tight container. In the laboratory, the solution is extracted from the sponge using rollers. **Ceramic rods:** Tapered ceramic rods or points (90 by 12 millimeters [Figure 9.3.3]) are prepared by boiling in distilled water, drying, and storage in a desiccator. In the field, the rods are taken out, weighed, and driven into the surface soil. After a period of time, the rods are withdrawn and weighed to determine the volume of absorbed water. The points are leached by boiling them in a known volume of distilled water. The solution is analyzed and the original pore water concentration determined from the ratio of water absorbed by the ceramic to the volume of boiling water. Section 9.3.7 describes uses of absorbent collectors with the SEAMIST system.

Method Selection Considerations: **Advantages:** No clear advantages over alternative methods. **Disadvantages:** (1) Require near saturated conditions; (2) procedures are relatively complex; (3) representativeness of samples extracted from porous points is questionable.

Frequency of Use: Uncommon.

Standard Methods/Guidelines: --

Sources for Additional Information: **Ceramic points:** Shimshi (1966); **Sponge:** Tadros and McGarity (1976).

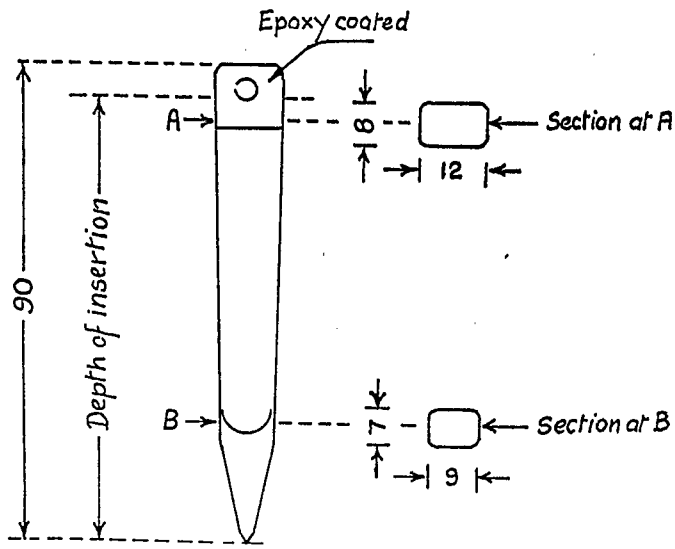

Figure 9.3.3 A point made from a discarded ceramic pressure plate used for collecting soil solute samples by absorption; units in millimeters (Shimshi, 1966, by permission).

9.3.4 Solids Sampling with Soil-Water Extraction

Other Names Used to Describe Method: Squeezing press, pressure extraction press/filter press, soil press.

Uses at Contaminated Sites: Soil pore water and/or solute sampling during site characterization; soil solute monitoring where suction methods will not work.

Method Description: Soil core samples are collected and soil water is extracted in the field or (more typically) the laboratory by one of a number of methods. **Column displacement** uses an immiscible fluid that displaces soil-pore water in a soil column by gravity. **Centrifugation** uses a double bottom centrifuge to remove soil water. The **displacement/centrifugation** method uses a combination an immiscible fluid and a centrifuge. Soil water also can be obtained by **squeezing** (Figure 9.3.4) or **vacuum** extraction. The resulting liquid is then analyzed for constituents of interest.

Method Selection Considerations: **Advantages:** (1) Vertical profiles of concentrations of specific pollutants can be obtained; (2) identification of variations of ionic concentrations in layered sequences is possible; and (3) solids samples can be used for additional analyses, such as grain size, cation exchange capacity, etc. **Disadvantages:** (1) A large number of samples is required to characterize spatial variability of soil solutes; (2) is expensive if deep sampling is required; (3) changes in soil-water chemistry might occur during preparation and extraction; (4) soil-water samples represent concentrations of moisture content at the time of sampling, ionic concentrations would be different at other moisture contents; (5) is a destructive method, which precludes comparing successive sampling results due to soil variability; (6) core holes might alter infiltration patterns and cause short-circuiting of pollutants to greater depths; and (7) the chemistry of soil water from various extraction methods might differ from the chemistry of soil pore liquid collected using suction and free-drainage samplers (especially if greater pressures are used).

Frequency of Use: Sometimes used during site characterization; rarely used for monitoring because of destructive nature of sampling.

Standard Methods/Guidelines: **Squeezing:** ASTM (1985).

Sources for Additional Information: See Table 9-3.

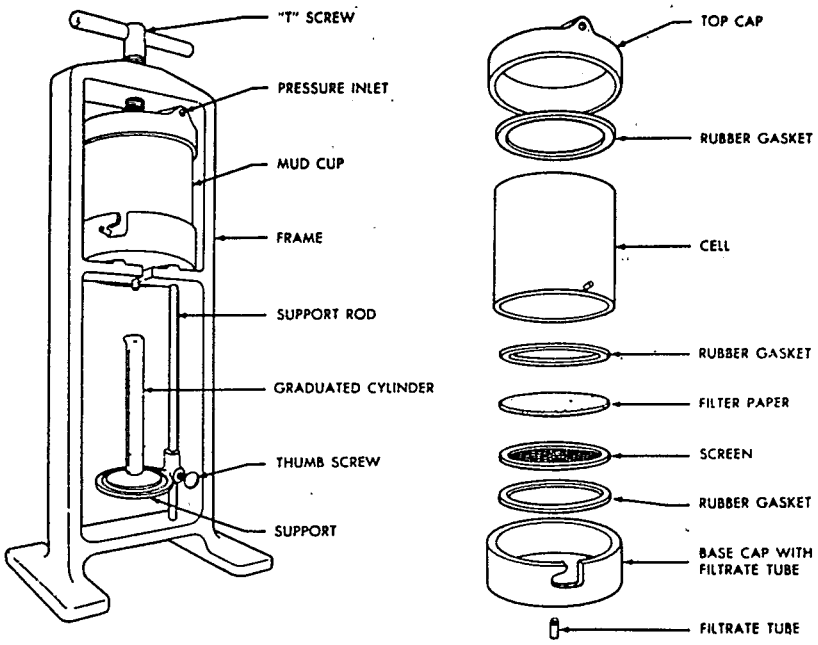

Figure 9.3.4 Filter press and chamber assembly for pore water extraction (Luscynski, 1961).

9.3 DIRECT SOIL-SOLUTE SAMPLING (OTHER METHODS)

9.3.5 Solids Sampling with Soil-Saturation Extract

Other Names Used to Describe Method: --

Uses at Contaminated Sites: Measuring water-soluble contaminants and soil minerals.

Method Description: Solids samples are collected using tube samplers or augers, and the electrical conductivity of a saturation extract (prepared in the field or laboratory) is measured. The electrical conductivity measurements are then interpreted in terms of salinity and other properties (Rhoades et al., 1989b,c)

Method Selection Considerations: **Advantages:** (1) Is a simple procedure; and (2) provides a measure of leaching potential from a soil sample. **Disadvantages:** (1) A large number of samples is required to characterize spatial variability of soil solutes; (2) is expensive if deep sampling is required; (3) changes in soil-water chemistry might occur during preparation and extraction; (4) sample saturation extract might not be representative of actual soil solution moving through the vadose zone; (5) is a destructive method, which precludes comparing successive sampling results due to soil variability; (6) core holes might alter infiltration patterns and cause short-circuiting of pollutants to greater depths; and (7) the chemistry of soil-saturation extracts will not be comparable to soil pore liquid collected using suction and free-drainage samplers.

Frequency of Use: Commonly used in arid and semi-arid areas where soluble salt concentrations in soils are high.

Standard Methods/Guidelines: Rhoades (1982), SCS (1984, Section 8E).

Sources for Additional Information: See Table 9-3.

9.3.6 Solids Sampling for Volatile and Microbial Constituents

Other Names Used to Describe Method: --

Uses at Contaminated Sites: Collecting uncontaminated samples for constituents that might be sensitive to exposure to air.

Method Description: Special sampling procedures are required for sampling contaminants that can change in concentration (degassing of volatile compounds) or chemical composition (redox-sensitive chemical species, such as ferrous and ferric iron) when exposed to the air. Similar care is required when sampling for microbiota in the subsurface, especially where oxygen content is low (typically in the zone of saturation). Even where exposure to the air is not a concern for microbiological sampling (typically in the vadose zone), special care is required to make sure that the sample has not been cross contaminated with soil microorganisms from higher soil horizons. The basic procedure involves collection of subsamples of power-driven sample cores (Section 2.4), using smaller diameter corers. Figure 9.3.6a shows suggested locations for microbial and volatile samples from a core. Samples for volatiles should be quickly transferred to the sample container and sealed with no air headspace in the container. Where cores contained anaerobic bacteria and chemical species of concern that are in a reduced state, samples need to be extracted in an oxygen-free environment. Figure 9.3.6b shows a plexiglass field glove box for collecting such samples. Sample containers are sterilized and filled with an inert gas such as nitrogen. In the field, the sealed containers are placed in the field glove box, before the box is filled with nitrogen. The core sample is pushed into the box through an iris port, and a core paring tool is used to collect subsamples in the oxygen-free environment for placement in sample containers.

Method Selection Considerations: Required whenever accurate measurement of volatiles and microorganisms in soil samples is necessary. The more complex glove box procedure should be used when accurate identification of reduced metal species and/or anaerobic microorganisms is required.

Frequency of Use: Relatively uncommon. Should probably be used more commonly.

Standard Methods/Guidelines: Dunlap et al. (1977), Leach et al. (1988).

Sources for Additional Information: Beeman and Suflita (1989), Board and Lovelock (1973), Bordner et al. (1978), Gilmore (1959), Phelps et al. (1989), Russell et al. (1992)

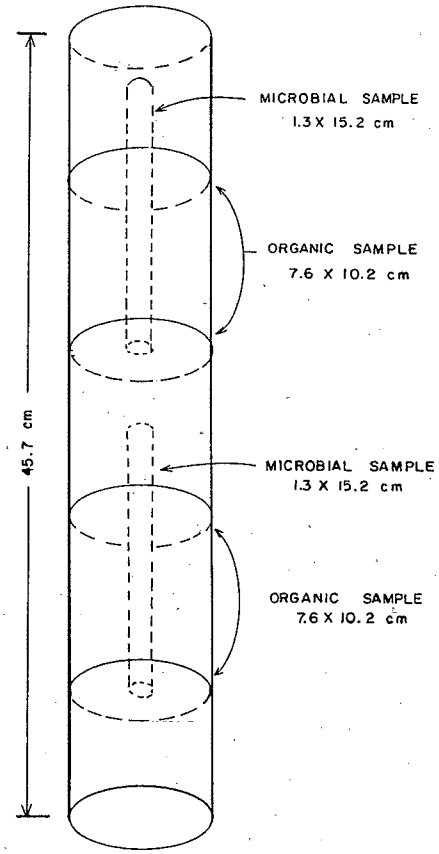

(a)

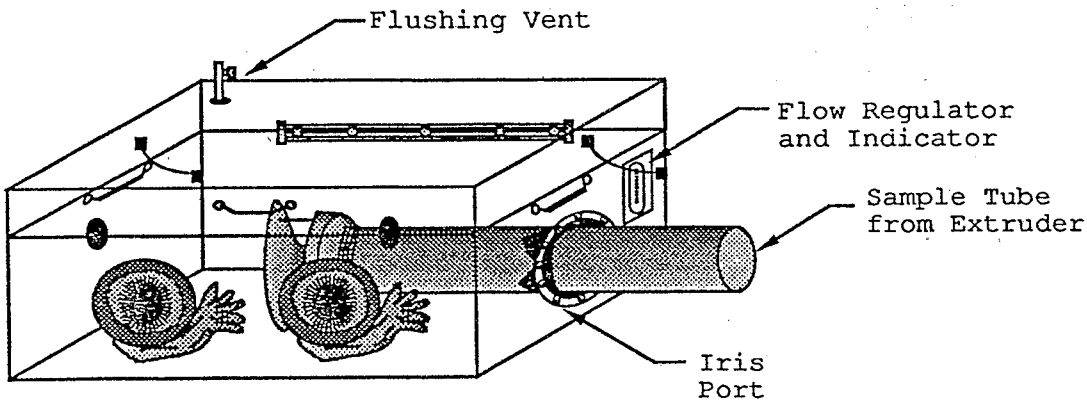

(b)

Figure 9.3.6 Solids sampling for microbiological and volatile contaminants: (a) Core subsample (Dunlap et al. 1977); (b) Field sampling glove box (Leach et al., 1988, by permission).

9.3.7 SEAMIST.

Other Names Used to Describe Method: --

Uses at Contaminated Sites: Sampling of soil-pore liquids and soil gases; measuring air permeability; might eventually be adapted for ground-water sampling.

Method Description: SEAMIST (Science and Engineering Associates Membrane Instrumentation and Sampling Technique) is a recently developed system that involves the placement of a membrane packer in an open borehole (Figure 9.3.7a-c). Soil-gas sampling ports attached to flexible tubing are attached to the membrane to create an in situ multilevel sampling system (Figure 9.3.7d). Multilevel soil pore liquid sampling is accomplished by the placement of absorbent collectors on the outside of the membrane, with leads for measuring electrical resistance running up the inside of the membrane (Figure 9.3.7d). Stabilization of the resistance readings serves as an indicator that the absorbent pad has equilibrated with the moisture content of the borehole wall. The flexible membrane is then retrieved by a reversal of the process shown in Figure 9.3.7a-c, and the absorbent pads are removed for fluid extraction in the laboratory (see Section 9.3.3).

Method Selection Considerations: **Advantages:** (1) A unit supports the hole wall against the sloughing, eliminating the need for casing and backfilling, provided the borehole is basically stable; (2) multi-level soil-pore liquid and gas sampling from the same borehole is possible, and the method potentially can be used with any type of instrumentation that can be fastened to the membrane fabric; and (3) materials are relatively inexpensive, allowing permanent installation, if desired. **Disadvantages:** (1) Cannot be used in unstable boreholes (i.e., heaving sands); and (2) is a new technique for which there has been relatively little experience or independent testing.

Frequency of Use: New method for which there is relatively little experience. The U.S Department of Energy is providing research and development funding for this technique.

Standard Methods/Guidelines: --

Sources for Additional Information: Keller (1991, 1992), Keller and Lowry (1990, 1991), Lowry and Narbutobskih (1991), Mallon et al. (1992).

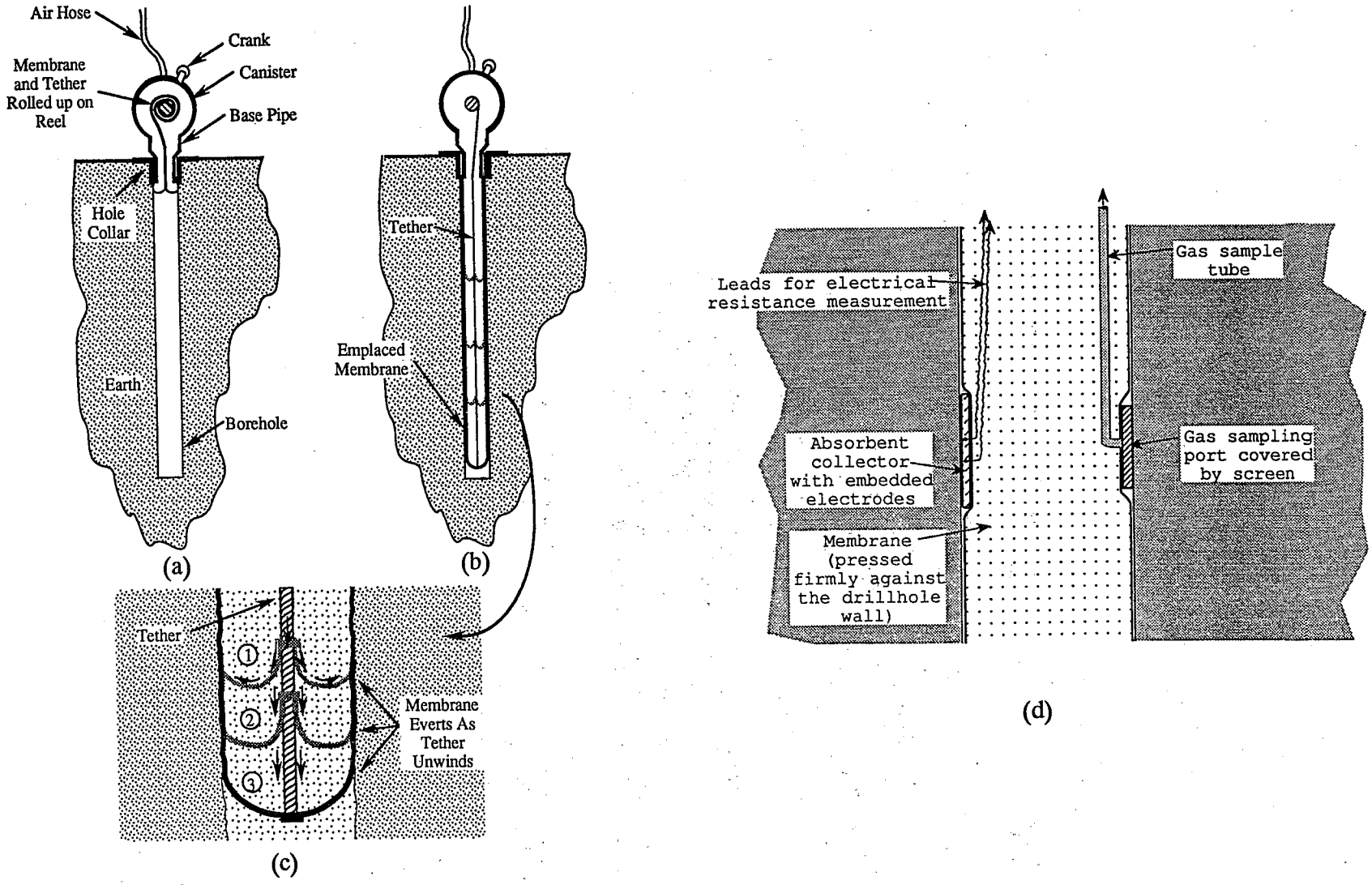

Figure 9.3.7 The basic operation of the SEAMIST system: (a) Insertion of packer; (b) Emplacement of membrane; (c) Enlarged view of bottom emplaced membrane (Lowry and Narbutovskih, 1991, by permission); (d) Collection of pore liquid with an absorbent pad and pore gas via an evacuated tube (Keller and Lowry, 1990).

9.4 GASEOUS PHASE CHARACTERIZATION

9.4.1 Soil-Gas Sampling (Static)

Other Names Used to Describe Method: Passive sampling.

Uses at Contaminated Sites: Detecting volatile contaminants in the unsaturated zone.

Method Description: Static sampling can be done in two ways. First, an in situ adsorbent (usually an activated charcoal rod) is buried in the soil for a few days to weeks (Figure 9.4.1a and b). The adsorbent is retrieved and analyzed for volatile organic compounds in a laboratory by mass spectrometry or gas chromatography. Second, static grab samples are collected from containers placed in the soil surface, which collect quiescent soil-gas samples. These samples usually are analyzed in the field using portable analytical instruments (see Sections 10.3.1 and 10.3.2).

Method Selection Considerations: **Advantages:** (1) Is inexpensive and easy to install; (2) laboratory analysis usually provides more precise measurement than field measurement of dynamic samples; (3) if sorption capacity of the sampler is not exceeded, average flux of contaminants to the surface can be calculated; and (4) field operations require minimal training. **Disadvantages:** (1) Is sensitive to exposure time and insufficient exposure might result in a false negative and overexposure (saturation of sorbent) might mask relative difference in soil-gas contamination at different sampling locations; (2) vertical profiles of soil-gas concentrations are more difficult to obtain than with soil probes; (3) results using in situ absorbent samplers are not available for days to weeks because desorption and laboratory analysis are time consuming; and (4) might not be appropriate for VOCs that have low boiling points (<5 degrees C) or compounds that are prone to thermal decomposition during pyrolysis.

Frequency of Use: Common.

Standard Methods/Guidelines: ASTM (1991a).

Sources for Additional Information: Vroblesky et al. (1992); see also, references for Section 9.4.2.

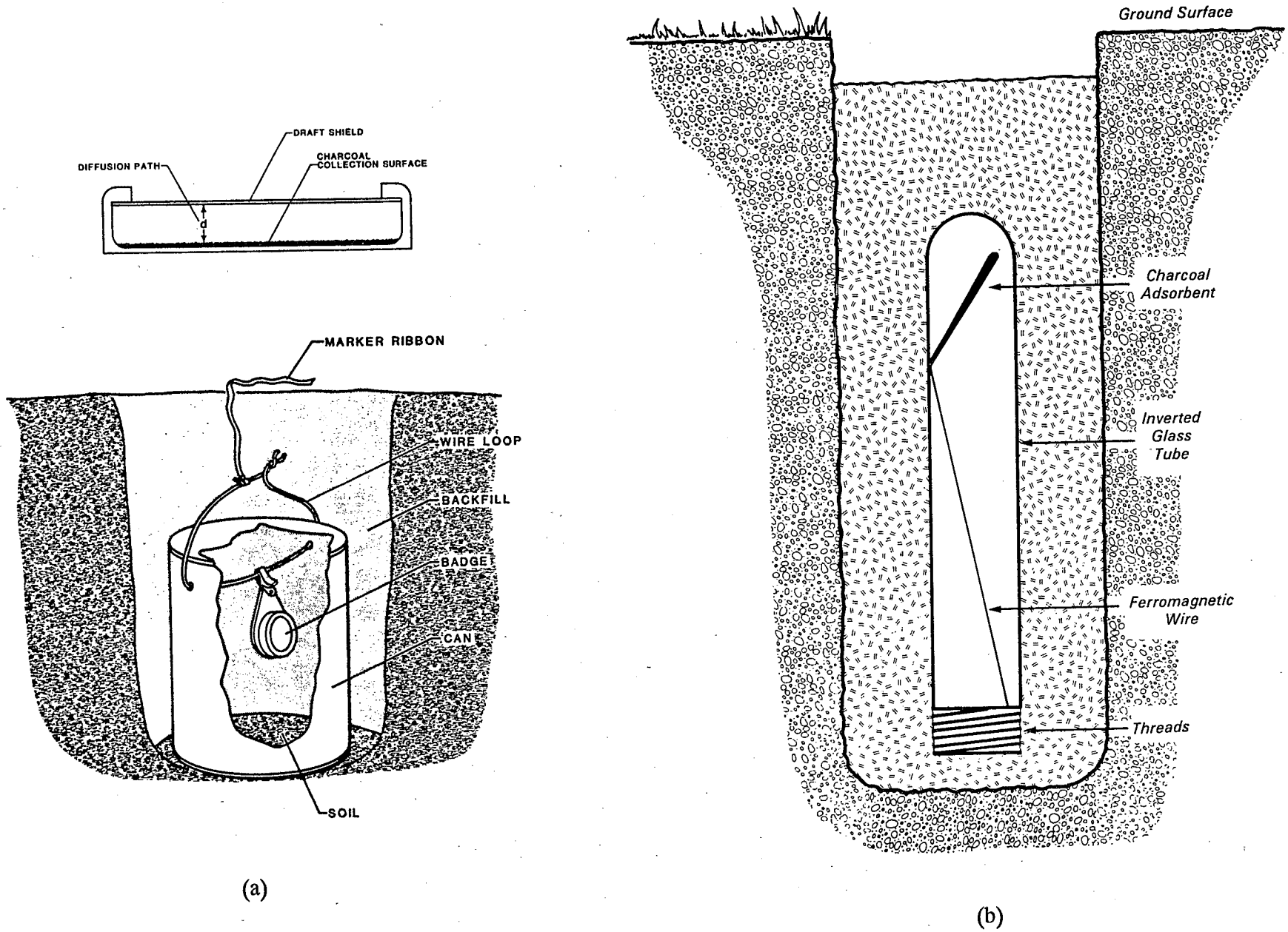

Figure 9.4.1 Passive soil-gas sampling installations: (a) Industrial hygiene badge (Pitchford et al., 1988); (b) Activated charcoal-coated wire (Kerfoot and Barrows, 1987).

9.4 GASEOUS PHASE CHARACTERIZATION

9.4.2 Soil-Gas Probes

Other Names Used to Describe Method: Dynamic grab samples, headspace sampling.

Uses at Contaminated Sites: Detecting and monitoring of volatile organic contaminants in the unsaturated zone.

Method Description: **Dynamic** soil-gas grab samples are collected from a moving stream of soil gas, which is pumped through a hollow probe that is driven into the soil (Figure 9.4.2a), or from permanently installed tubes at one or more levels in the soil (see Figure 5.5.2c). The probes can be manually or pneumatically driven, or installed in boreholes. Relatively nonvolatile NAPLs can be detected using steam injection (Figure 9.4.2b). The samples usually are analyzed in the field using portable analytical instruments. Grab samples usually are taken at the same depth at a number of surface locations for areal characterization of soil-gas concentrations. Where the vadose zone is thick, or discontinuous impermeable layers exist at a site, samples can be taken at different depths at the same location in order to define vertical changes in soil-gas concentration. An adaptation of the method has been used to detect zone of contaminated discharge to streams using bottom sediment gas bubbles (Figure 9.4.2c).

Method Selection Considerations: **Advantages:** (1) Is a nondestructive method; (2) hollow-probe samplers allow collection of multiple samples in a relatively short period of time; (3) when combined with on-site gas chromatography, results are available in a matter of minutes; and (4) problems associated with handling and transporting gas samples are minimized. **Disadvantages:** (1) Grab-sampling results are highly depth dependent and sampling results might be misleading if the correct depth is not sampled (based on site-specific factors, such as moisture conditions, air-filled porosity, and depth to ground water, and compound-specific factors, such as solubility, volatility, and degradability); (2) dynamic sampling perturbs local VOC concentrations as a result of pumping to retrieve sample; and (3) nonvolatile contaminants, if present, will not be detected. Table 9.4.2 provides specifications for a variety of commercially available soil-gas sampling probes.

Frequency of Use: Widely used for preliminary site characterization where volatile contaminants are known or suspected.

Standard Methods/Guidelines: ASTM (1991a). **Probe and well sampling:** Ford et al. (1984).

Sources for Additional Information: API (1985, 1991), Devitt et al. (1987), Kerfoot (1991), Kerfoot and Barrows (1987), Pitchford et al. (1988), Rector (1991-radon detection), Robbins (1990), Vroblesky and Lorah (1991).

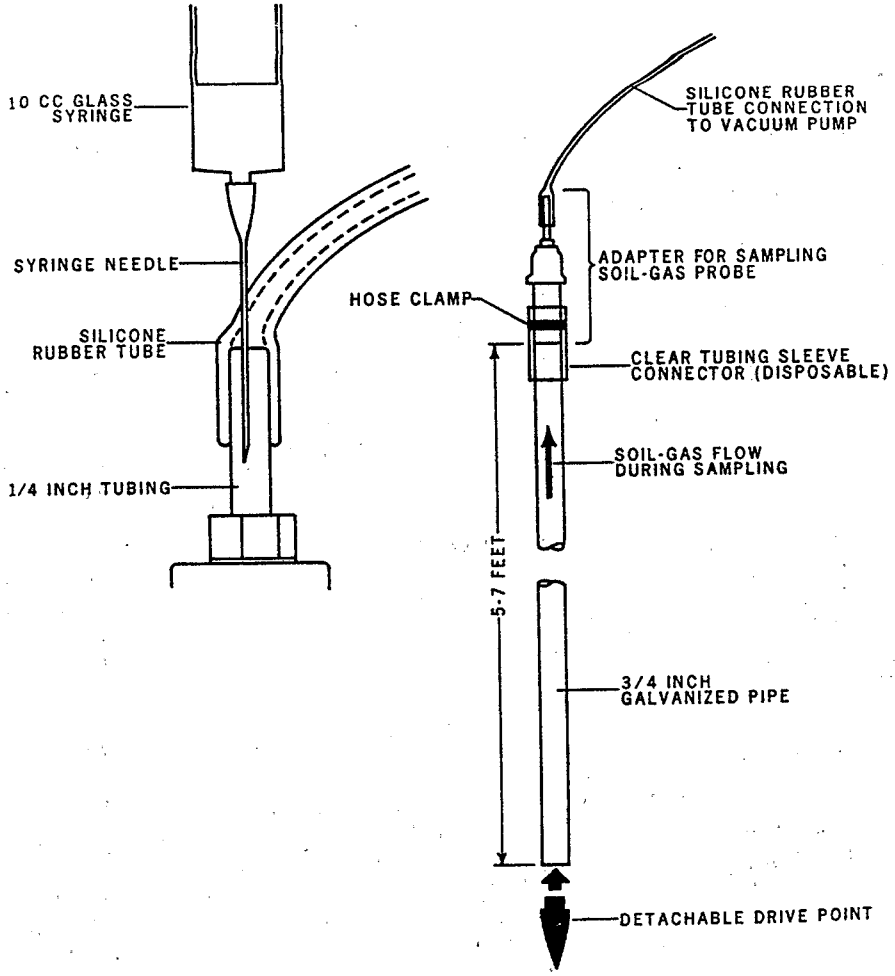

(a)

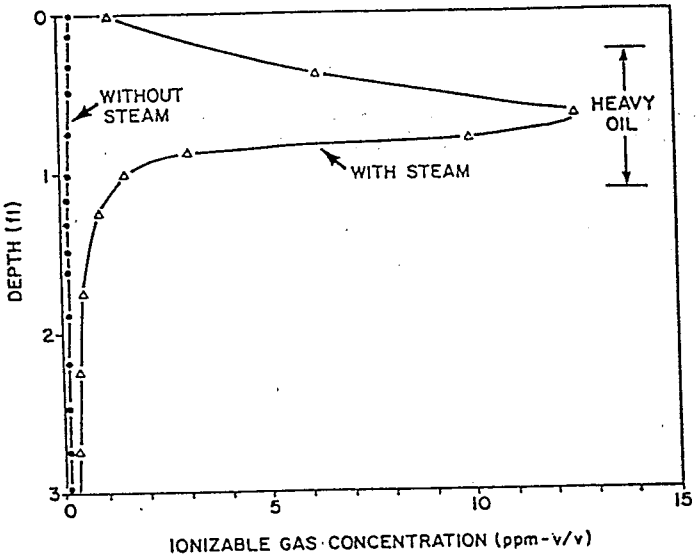

(b)

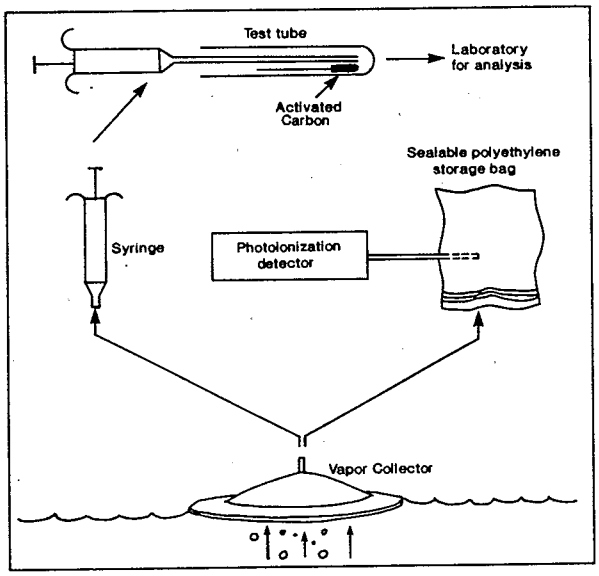

(c)

Figure 9.4.2 Dynamic soil-gas sampling systems: (a) Soil vacuum withdrawal (Pitchford et al., 1988); (b) Response of PID detector to soil-gas samples with and without steam injection (Kerfoot, 1991, by permission); (c) Water collection system (Vroblesky and Lorah, 1991, by permission).

Table 9.4.2 Commercial Sources for Soil-Gas Sampling Probes and Tank Leak Monitor Systems

MANUFACTURER	GROUNDWATER FLOW MONITORS		SOIL GAS PROBES				TANK LEAK MONITOR SYSTEMS					
	MAX DEPTH (FT)	MIN WELL DIAM. (IN)	DRIVE	POINTS	TUBE SECT. LENGTH (FT)	MAX DEPTH (FT)	SENSOR INPUTS (NO.)	ALARM TYPES	SENSOR TYPES	VAPOR SENSOR RANGE (PPM)	REPORTS	AUTO DIAL?
AGAR 713/464-4451							32	HI,LE SD	HY,LI CO,OT		AM	N
ARTS MANUFACTURING & SUPPLY 208/226-2017, 800/635-7330							X					
ATLANTIC SCREEN & MANUFACTURING 302/684-3197			MA	SS	5							
E L E INTERNATIONAL/SOILTEST PRODUCTS 708/295-9400, 800/323-1242							X					
ENVIRONMENTAL INSTRUMENTS 510/686-4474, 800/648-9355			MA	HS	50	20						
ENVIRONMENTAL MONITORING 206/486-8687, 800/468-3106	150	6					120	HI,LO SD			IR,AM,DE SR,IN	Y
FLUID COMPONENTS 619/744-6950, 800/854-1993							X					
FLUID CONTROLS 205/851-6000, 800/462-0860							X					
H N U SYSTEMS 617/964-6690, 800/724-5600							Various	HI,LO		10-2000		
HIGHLAND TANK & MANUFACTURING 814/893-5701							X					
IN-SITU 307/742-8213, 800/446-7488							3-8	LE,SD	HY,CO			
INVENTRON 313/473-9250							35	HI,LO LE			IR,LT,AM DE,SR,IN	Y
KECK INSTRUMENTS 517/655-5616, 800/542-5681			MA	SS	3	10						
LEAK-X 212/822-6767, 800/336-5325							X					
M S A, INSTRUMENT DIV. 800/672-4678							8	HI,LO LE,SD	HY,VA LI	20+		Y
M T S SYSTEMS, SENSOR DIV. 919/677-0100, 800/457-6620							X					
MAGNETEK B W CONTROLS 313/435-0700							X					
MARLEY PUMP/RED JACKET 913/831-5700, 800/468-7867							X					
NEOTRONICS OF NORTH AMERICA 706/535-0600, 800/535-0606							X					
OMNIDATA INTERNATIONAL 801/753-7760	300	2										
ONE PLUS, LEAK EDGE DIV. 708/498-0955							X					
PETRO VEND 708/485-4200							128	HI,LO LE,SD TV	FR,HY VA,LI CO	50-10,000	AM,DE IN,LT EV	N
PLASTIC FUSION FABRICATORS 205/534-0694, 800/356-1480							X					
POLLULERT SYSTEMS 317/328-4020, 800/343-2126							15	LE	HY,VA LI			Y
REMEDIAL SYSTEMS 508/543-1512							32	HI,LO LE	HY,LI		AM	Y
SOLINST CANADA 416/873-2255							2		HY,LI		LT	N
TELEDYNE ANALYTICAL 818/961-9221							X					
THERMO ENVIRONMENTAL INSTRUMENTS 508/520-0430								HI,LO		1-10,000	AM	N
TRACER RESEARCH 602/888-9400, 800/989-9929							X					
U.S. INDUSTRIAL PRODUCTS 213/926-9477							X					
UNITED SENSORS 516/253-0500							X					
UNIVERSAL SENSORS & DEVICES 818/998-7121, 800/899-7121							16	LE,SD	HY,VA LI,CO	20-7500	AM	Y
VEEDER ROOT 203/651-2700	20	2					64	HI,LO LE,TV	HY,VA LI,CO		AM,DE,SR IN,LT	Y
WARRICK CONTROLS 313/545-2512, 800/776-6622							16	HI,LO LE,SD	HY,VA LI,CO	0-4000		

KEY

AM	ALARMS
CO	COMBINATION
DE	DELIVERIES
EV	EVENT
FR	FREON
HI	HIGH
HS	HARDENED STEEL
HY	HYDROCARBONS
IN	INVENTORY
IR	INVENTORY RECONCILATION
LE	LEAK
LI	LIQUID
LO	LOW
LT	LEAK TEST RESULTS
OI	OIL THICKNESS
MA	MANUAL
SD	SELF DIAGNOSTIC
SR	SHIFT REPORT
SS	STAINLESS STEEL
TV	THEFT / VANDALISM
VA	VAPOR
X	TANK LEAK MONITORING SYSTE

Source: Pollution Equipment News (April 1993)

9.4.3 Tank/Pipeline Leak Sensors

Other Names Used to Describe Method: --

Uses at Contaminated Sites: Detecting leaks in underground storage tanks and pipelines.

Method Description: Numerous techniques have been developed to detect leaks in underground storage tanks and pipelines (Figure 9.4.3). **Inventory monitoring** involves identification of discrepancies in tank storage between additions and withdrawals and can be accomplished by manual tank gauging and reconciliation, statistical reconciliation, or using automatic gauging systems. Various methods can be used for **soil** or **ground-water release detection:** (1) Sampling of detection wells, (2) soil sampling, (3) using dyes and tracers, and (4) surface geophysics. **Vadose zone vapor detection** methods include: (1) Grab sampling or soil coring, (2) surface flux chambers (see Section 9.5.2), (3) downhole flux chambers; (4) accumulator systems, and (5) soil-gas probe testing (Section 9.4.2). **Secondary containment** with interstitial monitoring provides one of the safest leak detection methods because any releases are prevented from entering soil or ground water. **Physical** test methods include visual inspection using remote cameras (see Section 3.5.7) and tightness testing of tanks and piping. Over 90 leak detection systems are available that involve detection of organic vapors as an indication that underground storage tanks are leaking. Vapor wells and U-tubes are commonly used. More than 200 liquid hydrocarbon and hydrocarbon vapor detectors or sensors are available. Sensor systems can range from systems with alarms that go off when vapors are detected to systems that monitor product flow into and out of the tank and identify discrepancies that might be related to leakage. Table 9.4.2 provides information on a number of commercially available tank leak monitor systems.

Method Selection Considerations: The appropriate state and/or federal regulations should be consulted to determine the types of leak detection systems that should be used.

Frequency of Use: Standard requirement for any new installation of underground storage tanks containing hydrocarbons and other potentially hazardous liquids.

Standard Methods/Guidelines: ASTM (1991b, 1993).

Sources for Additional Information: Boone et al. (1991), Cochran (1987), Durgin and Young (1993), Eckert and Maresca (1992), Eklund and Crow (1987), Fromme et al. (1991), Lyman and Noonan (1990), Maresca and Hillger (1991), Maresca et al. (1991), Morrison and Mioduszewski (1986), Niaki and Broscius (1986), Portnoff et al. (1991), Scheinfeld and Schwendeman (1985), Scheinfeld et al. (1986), Schwendeman and Wilcox (1987), Starr et al. (1991b).

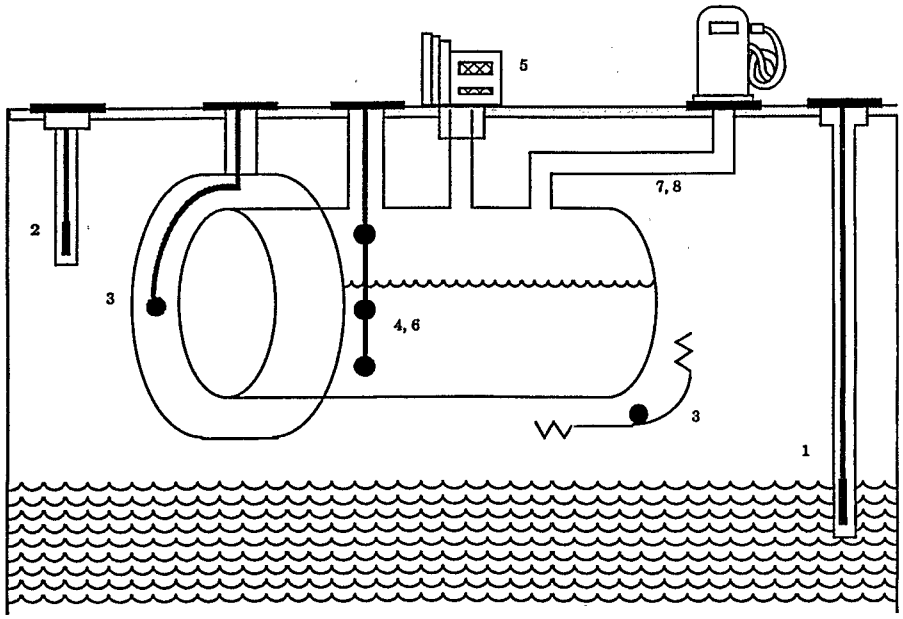

1 - Groundwater Monitoring
2 - Vapor Monitoring
3 - Secondary Containment with Interstitial Monitoring
4 - Automatic Tank Gauging
5 - Tank Tightness Testing with Interstitial Monitoring
6 - Manual Tank Gauging
7 - Leak Detection for Suction Piping
8 - Leak Detection for Pressurized Piping

Figure 9.4.3 Examples of leak detection methods for tanks and piping (Floyd, 1993).

9.4 GASEOUS PHASE CHARACTERIZATION

9.4.4 Air Pressure

Other Names Used to Describe Method: --

Uses at Contaminated Sites: Can be used as an indirect expression of soil structural properties because an air pressure buildup usually affects the relative magnitude of the air permeability and hydraulic conductivity, which are both indices of soil structure.

Method Description: Various types of manometers can be used, including: (1) Pressure transducers, (2) fluid manometers, and (3) aneroid barometers. The manometer is attached to an air-filled access tube that is placed in the soil (Figure 9.4.4). Changes in air pressure with time are measured in response to events like wetting of a dry soil. Care must be taken to ensure that the access tube fits tightly in the surrounding soil.

Method Selection Considerations: Flühler et al. (1986) consider soil-air pressure to be one of the most frequently neglected variables in soil physics research. Air pressure measurements might have value for site characterization, but their utility have not be evaluated in this context.

Frequency of Use: Uncommon.

Standard Methods/Guidelines: Flühler et al. (1986).

Sources for Additional Information: --

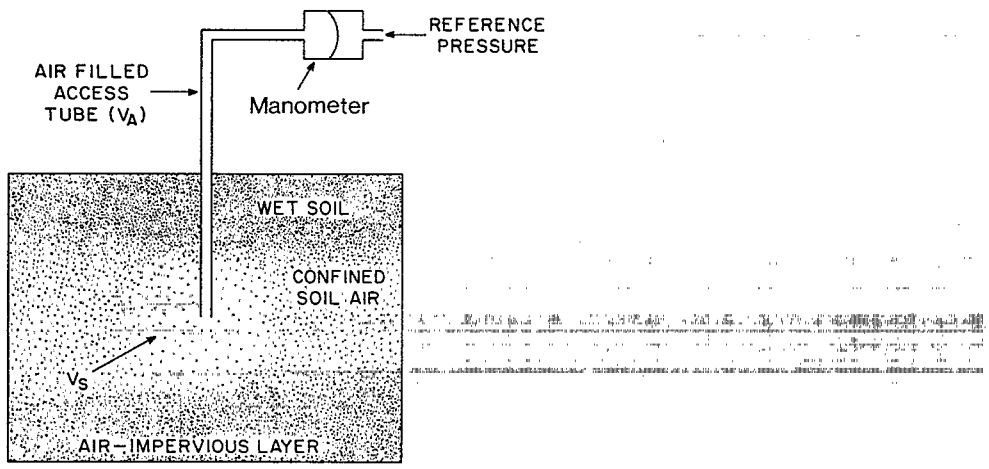

Figure 9.4.4 Diagram of a soil air pressure gauge (Flühler et al., 1986, by permission).

9.4 GASEOUS PHASE CHARACTERIZATION

9.4.5 Gas Permeability and Diffusivity

Other Names Used to Describe Method: Air permeability.

Uses at Contaminated Sites: Measuring gas permeability and diffusivity for modeling vapor transport in the vadose zone and designing vapor extraction remediation systems.

Method Description: The process of testing for **air permeability** is analogous to a multiple-well ground-water pumping test (Section 4.3.2). A vacuum is applied to a "pumping" well, with a screened interval in the soil zone of interest while changes in air pressure with time are monitored in pressure probes placed in the subsurface (Figure 9.4.5a). Johnson et al. (1990) provide formulas for calculating air permeability from the measured data. Baehr and Hult (1991) describe a more complex installation using multi-level pressure probes and two pumping wells separated by a confining bed. Section 7.4.4 describes use of air permeability in the deep vadose zone to estimated hydraulic conductivity. **Gas diffusion** is the principle mechanism for exchange of gases between the soil and the atmosphere, and hence is of interest for evaluating the potential for movement of volatile contaminants from the soil to the air. Gas diffusivity is measured in the field by injecting a known concentration of the gas of interest into a sealed cylinder (Figure 9.4.5b). The air in the confined space above the soil is kept stirred with a fan run by a hand drill, and the chamber is sampled over time to determine the change in gas concentration. Diffusivity is then calculated based on the decrease in concentration of the gas with time. A prototype probe for measuring gas diffusivity in a borehole has also been developed (Figure 9.4.5c).

Method Selection Considerations: If measurement of either air permeability or gas diffusivity is required, use of either method is relatively straightforward.

Frequency of Use: Will become increasingly common, especially where vapor extraction remediation activities are involved.

Standard Methods/Guidelines: **Air permeability:** ASTM Draft Standard Practice for Determining Air Permeability in Soils (Nielsen, 1991); Corey (1986-laboratory measurement using cores); **Gas diffusivity:** Rolston (1986a).

Sources for Additional Information: Baehr and Hult (1991), Bakker and Hidding (1970), Corey (1957, 1986), Evans and Kirkham (1949), Groenewoud (1968), Grover (1955), Havlena and Stephens (1992), Izadi and Stephenson (1992), Johnson et al. (1990), Kearl et al. (1990), Kirkham (1946), Lowry and Narbutobskih (1991), Marrin et al. (1991), Pirkle et al. (1992), Reeve (1953), Rogers and Nielsen (1991), Springer et al. (1991), Stonetrom and Rubin (1989), Weeks (1978), Weinig (1992); **Diffusion:** Jellick and Schnabel (1985), Kearl et al. (1988), Rolston et al. (1991).

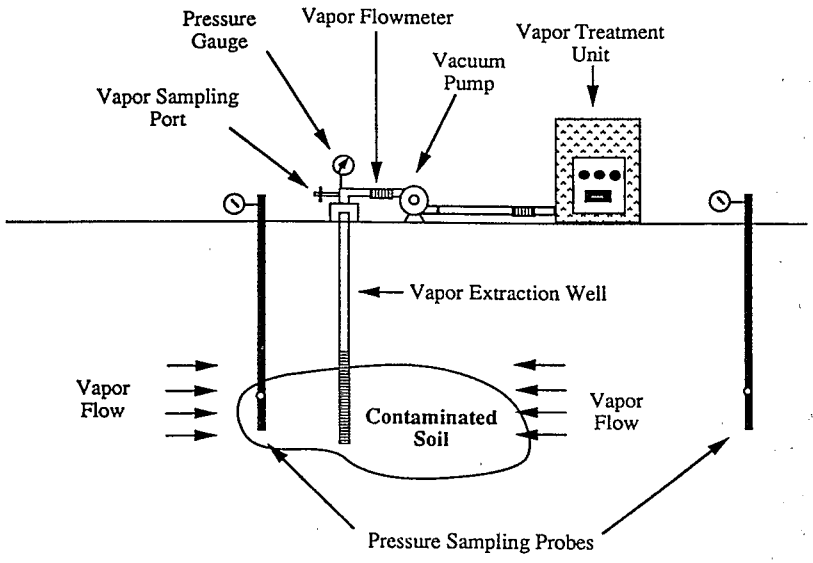

(a)

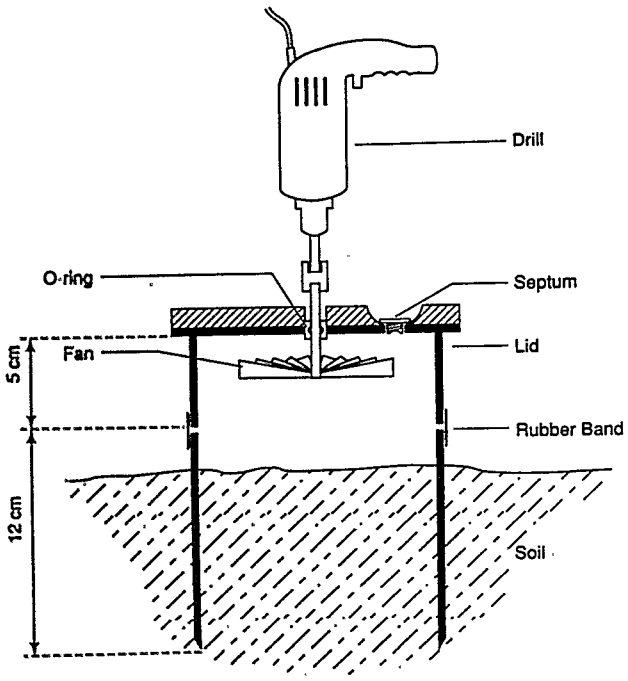

(b)

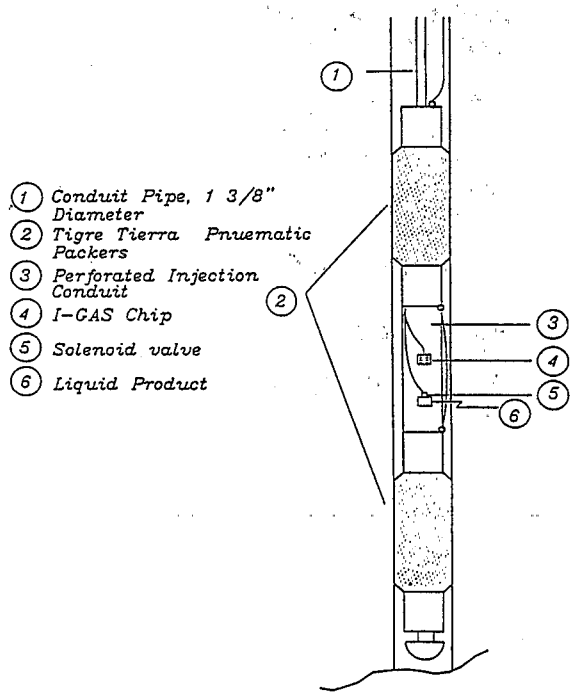

(c)

Figure 9.4.5 **Air permeability and gas diffusivity: (a) Schematic of air permeability test system (Johnson et al, 1990, by permission); (b) Schematic diagram of a field diffusion apparatus (Rolston et al., 1991); (c) Illustration of equipment configuration for in situ borehole gas diffusion measurements (Kearl et al., 1988).**

9.5 CONTAMINANT FLUX

9.5.1 Solute Flux Methods

Other Names Used to Describe Method: Various solute flux methods are available: (1) Average concentration method, (2) approximate analytic solution method, (3) long-term flux estimation method, and (4) short-term water and solute movement estimation method.

Uses at Contaminated Sites: Estimating the mass transfer of pollutants from the vadose zone to ground water.

Method Description: Several methods are available to calculate solute flux individual constituents or parameters of interest. **Average concentration method:** Soil-water concentrations from direct samples obtained using one of the methods described in this section for two different times are averaged. Average flux over the time period can be calculated using estimates of water flux during the same time period (using methods described in Section 7.5). **Approximate analytical solution method:** This is similar to the average concentration method, except an approximate analytic solution that considers diffusion-dispersion is used to estimate solute concentrations rather than measuring them directly. This method requires monitoring of soil-moisture changes with time (Section 6.3), adding a solution to the soil with known concentration, and estimating average water flux (Section 7.5). **Long term solute flux estimation method:** This is a simplified water balance method (see Section 7.5.1) requiring sampling of soil water at selected depth intervals at two times using one of the direct soil-water sampling methods discussed in this section. **Short-term water and solute flux estimation method:** This is a relatively complex method estimating peak solute concentration in the rooting zone after infiltration and redistribution of the soil water to field capacity.

Method Selection Considerations: These methods primarily have been developed for agricultural applications to calculate flux of nutrients and soluble salts in soil. The average concentration method is the simplest method, with potential use for mass balance analysis of pollutants at contaminated sites, provided that water flux can be estimated. The other methods require field water-budget measurements of varying complexity and are of relatively limited applicability to contaminated sites.

Frequency of Use: Commonly used in agricultural applications; use at contaminated sites increasing.

Standard Methods/Guidelines: Brown et al. (1983), Wagenet (1986).

Sources for Additional Information: Parker and Van Genuchten (1984), Philip (1973), Roth et al. (1990), U.S. EPA (1975).

9.5 CONTAMINANT FLUX

9.5.2 Soil-Gas Flux

Other Names Used to Describe Method: --

Uses at Contaminated Sites: Quantifying sources and sinks of gases within the soil; evaluating soil microbial activity; measuring the rate of flow of gases from volatile subsurface contaminants to the surface.

Method Description: Various methods have been developed: (1) Gas samples taken at different depths and over a period of time are collected and flux is calculated using Fick's law; (2) a closed chamber is placed over the soil surface and the increase in concentration of gas within the chamber is measured as a function of time (Figure 9.5.2); and (3) a capped cylinder is driven into the ground surface (flow-through chamber method). Ambient air is drawn through the chamber and concentration of the gas of interest is measured in both the input and output streams.

Method Selection Considerations: These methods primarily have been used in research related to gases of interest for agriculture (nitrogen and carbon dioxide).

Frequency of Use: Relatively common.

Standard Methods/Guidelines: Ball and Smith (1991), Rolston (1986b).

Sources for Additional Information: Aulach et al. (1991), Gholson et al. (1989), Loftfield et al. (1992), Matthias et al. (1980).

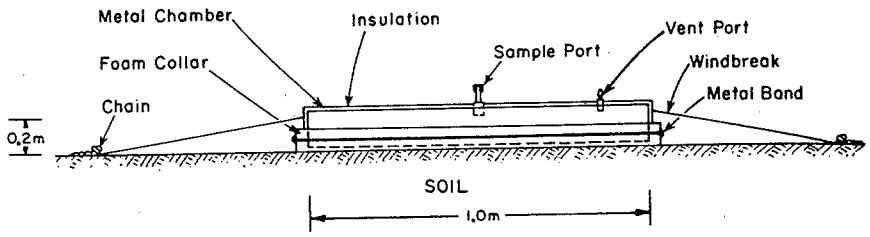

Figure 9.5.2 **Diagram of closed chamber for directly measuring gas flux at the soil surface (Rolston, 1986b, after Matthias et al., 1980, by permission).**

Table 9-2 Reference Index for Indirect Methods for Monitoring Solute Movement

Topic	References
Overviews	Everett et al. (1982, 1983), Kaufman et al. (1981), Rhoades (1978, 1984), Rhoades and Oster (1986), Wilson (1983), Yadav et al. (1979)
EC-Salinity Calibration	Bottraud and Rhoades (1985), Gupta and Hanks (1972), Halvorson et al. (1977), Klute and Letey (1958), Mualem and Friedman (1991), Rhoades (1980, 1981), Rhoades et al. (1976, 1977, 1989a-c, 1990), Shainberg et al. (1980), van Hoorn (1980)
Four Electrode	Austin and Rhoades (1979), Bohn et al. (1982), Cameron et al. (1981), Halvorson and Reule (1976), Halvorson and Rhoades (1974, 1976), Nadler (1981, 1991), Nadler and Frenkel (1980), Nadler et al. (1984, 1990), Rhoades and Halvorson (1977), Rhoades and Ingvalson (1971), Roux (1978), van Hoorn (1980); Soil Moisture: Bunnenberg and Kuhn (1980), Edlefson and Anderson (1941), Kirkham and Taylor (1950)
EC Probes	Nadler et al. (1982), Rhoades (1979), Rhoades and Halvorson (1977), Rhoades and van Schilfgaarde (1976), Shea and Luthin (1961)
Salinity Sensors	Austin and Oster (1973), Enfield and Evans (1969), Ingvalson et al. (1970, 1976), Kemper (1959), Oster and Ingvalson (1967), Oster and Willardson (1971), Oster et al. (1973, 1976), Reicosky et al. (1970), Rhoades (1972), Rhoades and Oster (1986), Richards (1966), Todd and Kemper (1972), U.S. Soil Salinity Staff (1981), Wesseling and Oster (1973), Wierenga and Patterson (1974), Wood (1978a), Yadav et al. (1979); Temperature Correction Coefficients: Campbell et al. (1948), Richards (1954), Richards and Campbell (1948), Whitney and Means (1897)
EMI Sensors	Cameron et al. (1981), Cook and Walker (1992), Corwin and Rhoades (1982, 1984), de Jong et al. (1979), Hendrickx et al. (1992), Kachonoski et al. (1988-soil-water content), McBride et al. (1990), Rhoades and Corwin (1981), Rhoades and Oster (1986), Williams and Baker (1982), Wollenhaupt et al. (1986)

Table 9-3 Reference Index for Direct Soil-Water Sampling Methods

Topic	References
Overviews	Dorrance et al. (1991), Everett (1990), Everett et al. (1982, 1990), Hornby et al. (1986), Kohnke et al. (1940), Litaor (1988), Morrison (1983), Nagpal (1982), Rhoades and Oster (1986), Robbins and Gemmell (1985), Silkworth and Grigal (1981), U.S. EPA (1986), Wilson (1983, 1990)
Suction Samplers	
Chemical Effects	Alberts et al. (1977), Anderson (1986), Bottcher et al. (1984), Creasy and Dreiss (1985), Dazzo and Rothwell (1974), England (1974), Grover and Lamborn (1970), Haines et al. (1982), Hansen and Harris (1975), Hornby et al. (1986), Levin and Jackson (1977), McGuire et al. (1992), Peters and Healy (1988), Rhoades and Bernstein (1971), Severson and Grigal (1976), Silkworth and Grigal (1981), Stearns et al. (1980), Suarez (1987), Tasi et al. (1980), Wagner (1962), Wolff (1967), Zabowski and Ugolini (1990)
Physical Effects	Cochran et al. (1970), Kung and Donohue (1991), Morrison and Lowery (1990-sampling radius), Narasimham and Dreiss (1986), Severson and Grilgal (1976), Talsma et al. (1979), van der Ploeg and Beese (1977), Warrick and Amoozegar-Fard (1977)
Porous Cup Cleaning Procedures	Aulenbach and Clesceri (1980), Creasey and Dreiss (1988), Grover and Lamborn (1970), Neary and Tomassini (1985)
Porous Cup (Vacuum)	Ahlert et al. (1976), Alberts et al. (1977), Angle et al. (1991), Ballestero et al. (1990), Barbarick et al. (1979), Barbee and Brown (1986), Bell (1974), Bourgeois and Lavkulich (1972a,b), Brooks et al. (1958), Brown (1986), Burns (1992), Chow (1977a, 1977b-fritted glass), Debyle et al. (1988), de Jong (1976), Dugan et al. (1975), Eleuterius (1980), Grier et al. (1977), Haines et al. (1982), Hansen and Harris (1975), Joslin et al. (1987), Knighton and Streblow (1981), Krone et al. (1951), Miller (1992), Nielsen and Phillips (1958-fritted glass), Quin and Forsyth (1976), Reeves and Doering (1965), Riekerk and Morris (1983), Shuford et al. (1977), Silkworth and Grigal (1981), Smith and Carsel (1986), Starr (1985), Starr et al. (1991a), Suarez (1986), Tyler and Thomas (1977), Wagner (1962, 1965), Wengel and Griffin (1971); Cup Material Comparisons: McQuire and Lowery (1992)
Porous Cup (Vacuum-Pressure)	Apgar and Langmuir (1971), Ball and Coley (1986), Banton et al. (1992), Biggar and Nielsen (1976, 1978), Biggar et al. (1975), Brose et al. (1986), Everett and McMillion (1985), Everett et al. (1984, 1988), Fenn et al. (1977), Gerhardt (1977), Hounslow et al. (1978), Johnson and Cartwright (1980), Johnson et al. (1981), Long (1978), Merry and Palmer (1985), Morrison (1982), Morrison and Szecsody (1985, 1987), Morrison and Tsai (1981), Parizek and Lane (1970), Peters and Healy (1988), Quin and Forsyth (1976-nylon), Rehm et al. (1987), Starr et al. (1978), Tsai et al. (1980), U.S. EPA (1986), Wood (1978b), Wood et al. (1981), Young (1985), Yu et al. (1978), Zimmermann et al. (1978); High-Pressure Vacuum: Bond and Rouse (1985), Wood (1973), Wood and Signor (1975)

Table 9-3 (cont.)

Topic	References
Suction Samplers (cont.)	
Vacuum Plates	Chow (1977b), Cochran et al. (1970), Cole (1958), Cole et al. (1961), Duke et al. (1970), Haines et al. (1982), Iskandar and Nakano (1978), Neary and Tomassini (1985), Tanner et al. (1954), van der Ploeg and Beese (1977)
Membrane Filter	Everett (1990), Everett et al. (1982), Stevenson (1978), U.S. EPA (1986), Wagemann and Graham (1974), Wilson (1990)
Hollow Fiber	Everett (1990), Jackson et al. (1976), Levin and Jackson (1977), Morrison (1982), Silkworth and Grigal (1981), U.S. EPA (1986), Wagemann and Graham (1974)
Ceramic Filter Candle	Duke and Haise (1973), Everett (1990), Hergert and Watts (1977), Hoffman et al. (1978), Montgomery et al. (1987), Smith and McWhorter (1977), van Shilfgaarde (1977), U.S. Soil Salinity Laboratory Staff (1981)
Monolith Lysimeters	Belford (1979), Brown (1986), Brown et al. (1974, 1985), Cameron et al. (1992), Merek et al. (1988), Persson and Bergström (1991)
Filled-Type Lysimeters	Tyler (1981), Upchurch et al. (1973)
Capillary Wick Samplers	Boll et al. (1991, 1992), Brown et al. (1988), Holder et al. (1991), Politeka et al. (1992)
Other Direct Soil Water Sampling Methods	
Free-Drainage Samplers	Aulenbach and Clesceri (1980), Barbee and Brown (1986), Boll et al. (1991), Fenn et al. (1977), Haines et al. (1982), Hornby et al. (1986), Jordon (1968), Kmet and Lindorf (1983), Parizek and Lane (1970), Radulovich and Sollins (1987), Rehm et al. (1987), Russell and Ewel (1985), Shaffer et al. (1979), Starr et al. (1991a), Tyler and Thomas (1977), U.S. EPA (1986), Wilson and Small (1973); Caisson Lysimeter: McMichael and McKee (1966), Schmidt and Clements (1978), Schnieder and Oaksford (1986), Schneider et al. (1983); Buried Cup: Miller (1992)
Tile-Drainage Sampling	Richard and Steenhuis (1988), Starr et al. (1991a), Thomas and Barfield (1974), Willardson et al. (1973)
Perched Water Table	Miller (1992), Starr et al. (1991a), Wilson and Schmidt (1978); Multi-Level Samplers: Cherry and Johnson (1982), Hansen and Harris (1974, 1980), Pickens et al. (1981), Smith at al. (1982); see also, Section 5.5.3

Table 9-3 (cont.)

Topic	References
Other Direct Soil Water Sampling Methods (cont.)	
Solids Sampling (Soil-Water Extraction)	Solvent/Fluid Column Displacement: Adams (1974), Adams et al. (1980), Barrow (1982), Batley and Giles (1979), Kittrick (1980, 1983); Double-Bottom Centrifuge: Adams et al. (1980), Dao and Lavy (1978), Davies and Davies (1963), Edmunds and Bath (1976), Elkhatib et al. (1986, 1987), Fenn et al. (1977), Gillman (1976), Zabowski (1989), Zabowski and Ugolini (1990); Immiscible Fluid Displacement/Centrifugation: Mubarak and Olsen (1976, 1977), Phillips and Bond (1989), Whelan and Barrow (1980); Squeezing Displacement: Fenn et al. (1977), Lusczynski (1961), Manheim (1966), Patterson et al. (1978); Vacuum Displacement: Fenn et al. (1977), Richards (1954-pressure membrane apparatus), Wolt and Graveel (1986); Unclassified[a]: Behel et al. (1983), Brown (1986), Kinniburgh and Miles (1983); Lucas and Reeves (1980), Pratt et al. (1976), Rible et al. (1976), Wellings and Bell (1980), Yamasaki and Kishita (1972)
Solids Sampling (Soil-Saturation Extract)	Barbarick et al. (1979), Campbell et al. (1948), Moran et al. (1978), Rhoades (1981, 1982), Rhoades and Bernstein (1971), Rhoades et al. (1989a-c), Richter and Jury (1986), SCS (1984), Wilson (1983); Chemical Effects: Reitmeier (1946)

[a]It was not possible to review these references to determine what extraction method was used.

SECTION 9 REFERENCES

Adams, F. 1974. Soil Solution. In: The Plant Root and Its Environment, E.W. Carson (ed.), University Press, Charlottesville, VA, pp. 441-481.

Adams, F., C. Burmester, N.V. Hue, and F.L. Long. 1980. A Comparison of Column-Displacement and Centrifuge Methods for Obtaining Soil Solutions. Soil Sci. Soc. Am. J. 44:733-735.

Ahlert, R.C., R.H. Gesumaria, and H.L. Motto. 1976. Subsurface Monitoring of Sludge Disposal Sites. In: Establishment of Water Quality Monitoring Programs, L.G Everett and K.D. Schmidt (eds.), American Water Resources Association, St. Paul, MN, pp. 106-121. [Vacuum porous cup]

Alberts, E.E., R.E. Burwell, and G.E. Schuman. 1977. Soil Nitrate-Nitrogen Determined by Coring and Solution Extraction Techniques. Soil Sci. Soc. Am. J. 41:90-92. [Vacuum porous cup]

American Petroleum Institute (API). 1985. Detection of Hydrocarbons in Ground Water by Analysis of Shallow Soil Gas/Vapor. API Publication 4394, API, Washington, DC, 80 pp.

American Petroleum Institute (API). 1991. An Evaluation of Soil Gas and Geophysical Techniques for Detection of Hydrocarbons. API Publication No. 4509, API, Washington, DC, 110 pp.

American Society for Testing and Materials (ASTM). 1985. Standard Test Method for Pore Water Extraction and Determination of the Soluble Salt Content of Soils by Refractometer. D4542-85, (Vol. 4.08), ASTM, Philadelphia, PA.

American Society for Testing and Materials (ASTM). 1991a. Standard Guide for Soil Gas Monitoring in the Vadose Zone. D5314-91, (Vol. 4.08), ASTM, Philadelphia, PA.

American Society for Testing and Materials (ASTM). 1991b. Standard Guide for Using Release Detection Devices with Underground Storage Tanks. E1430-91, (Vol. 11.04), ASTM, Philadelphia, PA.

American Society for Testing and Materials (ASTM). 1992. Standard Guide for Pore-Liquid Sampling From the Vadose Zone. D4696-92, (Vol. 4.08), ASTM, Philadelphia, PA.

American Society for Testing and Materials (ASTM). 1993. Standard Practice for Evaluating the Performance of Release Detection Systems for Underground Storage Tank Systems. E1526, Society Ballot, January, ASTM, Philadelphia, PA.

Anderson, L.D. 1986. Problems Interpreting Samples Taken with Large Volume, Falling Suction Soil-Water Samplers. Ground Water 24:761-769.

Angle, J.S., M.S. McIntosh, and R.L. Hill. 1991. Tension Lysimeters for Collecting Soil Percolate. In: Groundwater Residue Sampling, R.G. Nash and A.R. Leslie (eds.), ACS Symposium Series 465, American Chemical Society, Washington, DC, pp. 290-299. [Vacuum-type porous cup]

Apgar, M. and D. Langmuir. 1971. Ground-Water Pollution Potential of a Landfill Above the Water Table. Ground Water 9(6):76-96.

Aulach, M.S., J.W. Doran, and A.R. Mosier. 1991. Field Evaluation of Four Methods for Measuring Denitrification. Soil Sci. Soc. Am. J. 55:1332-1338. [Nitrogen gas flux measurement]

Aulenbach, D. and N. Clesceri. 1980. Monitoring for Land Application of Wastewater. Water, Air, and Soil Pollution 14:81-94.

Austin, R. and J. Oster. 1973. Oscillator Circuit for Automated Salinity Sensor Measurements. Soil Sci. Soc. Am. Proc. 37:327-329.

Austin, R.S. and J.D. Rhoades. 1979. A Compact, Low-Cost Circuit for Reading Four-Electrode Salinity Sensors. Soil Sci. Soc. Am. J. 43:808-810.

Baehr, A.L. and M.F. Hult. 1991. Evaluation of Unsaturated Zone Air Permeability Through Pneumatic Tests. Water Resources Research 27(10):2605-2617.

Bakker, J.W. and A.P. Hidding. 1970. The Influence of Soil Structure and Air Content on Gas Diffusion in Soils. Neth. J. Agric. Sci. 18:37-48. (Also reprinted as Tech. Bull. 71, Institute for Land and Water Management Research, Wageningen, The Netherlands.)

Ball, J. and D.M. Coley. 1986. A Comparison of Vadose Monitoring Procedures. In: Proc. 6th Nat. Symp. and Exp. on Aquifer Restoration and Ground Water Monitoring, National Water Well Association, Dublin, OH, pp. 52-61. [Vacuum pressure porous cup]

Ball, B.C. and K.A. Smith. 1991. Gas Movement. In: Soil Analysis: Physical Methods, K.A. Smith and C.E. Mullins (eds.), Marcel Dekker, New York, NY, pp. 511-549.

Ballestero, T.P., S.A. McHugh, and N.E. Kinner. 1990. Monitoring of Immiscible Contaminants in the Vadose Zone. In: Ground Water and Vadose Zone Monitoring, D.M. Nielsen and A.I. Johnson (eds.), ASTM STP 1053, American Society for Testing and Materials, Philadelphia, PA, pp. 25-33.

Banton, O., LaFrance, P., R. Martel, and J.P. Villeneuve. 1992. Planning of Soil-Pore Water Sampling Campaigns Using Pesticide Transport Modeling. Ground Water Monitoring Review 12(3):195-202. [Pressure-vacuum porous cup]

Barbarick, K.A., B.R. Sabey, and A. Klute. 1979. Comparison of Various Methods of Sampling Soil Water for Determining Ionic Salts, Sodium and Calcium Content in Soil Columns. Soil Sci. Soc. Am. J. 43:1053-1055.

Barbee, G.C. and K.W. Brown. 1986. Comparison Between Suction and Free-Drainage Soil Solution Samplers. Soil Science 141:149-154.

Barrow, N.J. 1982. An Evaluation of the Immiscible Displacement Method for Studying the Relation Between Soil and Phosphate. Fert. Res. 3:423-433.

Batley, G.E. and M.S. Giles. 1979. Solvent Displacement of Interstitial Waters Before Trace Metal Analysis. Water Research 13:879-886.

Beeman, R.E. and J.M. Suflita. 1989. Evaluation of Deep Subsurface Sampling Procedures Using Serendipitous Microbial Contaminants as Tracer Organisms. Geomicrobiol. J. 7(4):223-233.

Behel, Jr., D., D.W. Nelson, and L.E. Sommers. 1983. Assessment of Heavy Metal Equilibria in Sewage Sludge-Treated Soil. J. Environ. Qual. 12(2):181-186.

Belford, R.K. 1979. Collection and Evaluation of Large Soil Monoliths for Soil and Crop Studies. J. Soil Science 30:363-373.

Bell, R. 1974. Porous Ceramic Soil Moisture Samplers: An Application in Lysimeter Studies on Effluent Spray Irrigation. N. Zealand J. Experim. Agric. 2:173-175.

Biggar, J.W. and D.R. Nielsen. 1976. Spatial Variability of Leaching Characteristics of a Field Soil. Water Resources Research 12:78-84. [Vacuum-pressure porous cup]

Biggar, J.W. and D.R. Nielsen. 1978. Field Monitoring of Soil Water Constituents in the Unsaturated Zones. In: Establishment of Water Quality Monitoring Programs, L.G Everett and K.D. Schmidt (eds.), American Water Resources Association, St. Paul, MN, pp. 106-121. [Vacuum-pressure porous cup]

Biggar, J.W., D.R. Nielsen, and J.L. MacIntyre. 1975. Measurement of Water and Nitrogen Fluxes in Soil Profiles Planted to Maize. In: Isotope Ratios as Pollutant Source and Behavior Indicators, International Atomic Energy Agency, Vienna, pp. 417-428. [Vacuum-pressure porous cup]

Board, R.G. and D.W. Lovelock. 1973. Sampling-Microbiological Monitoring of Environments. Academic Press, New York, NY.

Bohn, H.L., J. Ben-Asher, H.S. Tabbara, and M. Marwan. 1982. Theories and Tests of Electrical Conductivity in Soils. Soil Sci. Soc. Am. J. 46:1143-1146.

Boll, J., J.S. Selker, B.M. Nijssen, T.S. Steenhuis, J. Van Winkle, and E. Jolles. 1991. Water Quality Sampling Under Preferential Flow Conditions. In: Lysimeters for Evapotranspiration and Environmental Measurements (Proc. ASCE Int. Symp Lysimetry, Honolulu, July 1991), R.G. Allen et al. (eds.), American Society of Civil Engineers, New York, NY, pp. 290-298. [Capillary wick sampler]

Boll, J., T.S. Steenhuis, and J.S. Selker. 1992. Fiberglass Wicks for Sampling Water and Solutes in the Vadose Zone. Soil Sci. Soc. Am. J. 56:701-707.

Bond, W.R. and J.V. Rouse. 1985. Lysimeters Allow Quicker Monitoring of Heap Leaching and Tailing Sites. Mining Engineering, April, pp. 314-319. [High-pressure vacuum]

Boone, S.E., P.J. Mraz, J.M. Miller, J.J. Mazza, and M. Borst. 1991. State-of-the-Art Procedures and Equipment for Internal Inspection of Underground Storage Tanks. EPA/600/2-90/061. Risk Reduction Engineering Laboratory, Cincinnati, OH, 121 pp.

Bordner, R., J. Winters, and P. Scarpino. 1978. Microbiological Methods for Monitoring the Environment: Water and Wastes. EPA/600/8-78/017 (NTIS PB290-329).

Bottcher, A.B., L.W. Miller, and K.L. Campbell. 1984. Phosphorus Adsorption in Various Soil-Water Extraction Cup-Materials: Effect of Acid Wash. Soil Science 137:239-244.

Bottraud, J.-C. and J.D. Rhoades. 1985. Referencing Water Content Effects of Soil Electrical Conductivity in Soils. Soil Sci. Soc. Am J. 49:1579-1581.

Bourgeois, W.W. and L.M. Lavkulich. 1972a. Application of Acrylic Plastic Tension Lysimeters to Sloping Land. Can. J. Soil Sci. 52:288-290.

Bourgeois, W.W. and L.M. Lavkulich. 1972b. A Study of Forest Soils and Leachates on Sloping Topography Using A Tension Lysimeter. Can. J. Soil Sci. 52:375-391.

Brooks, R.H., J.O. Goertzen, and C.A. Bower. 1958. Prediction of Changes in the Compositions of the Dissolved and Exchangeable Cations in Soils upon Irrigation with High-Sodium Waters. Soil Sci. Soc. Am. Proc 22:122-124.

Brose, R.J., R.W. Shatz, and T.M. Regan. 1986. An Alternate Method of Lysimeter and Flour Pack Placement in Deep Boreholes. In: Proc. 6th Nat. Symp. and Exp. on Aquifer Restoration and Ground Water Monitoring, National Water Well Association, Dublin, OH, pp. 88-95. [Pressure-vacuum porous cup]

Brown, K.W. 1986. Efficiency of Soil Core and Soil-Pore Water Sampling Systems. EPA/600/2-86/083 (NTIS PB87-106100).

Brown, K.W., C.J. Gerard, B.W. Hipp, and J.T. Ritchie. 1974. A Procedure for Placing Large Undisturbed Monoliths in Lysimeters. Soil Sci. Soc. Am. Proc. 38:981-983.

Brown, R.H., A.A. Konoplyantsev, J. Ineson, and V.S. Kovalensky. 1983. Ground-Water Studies: An International Guide for Research and Practice. Studies and Reports in Hydrology No. 7, UNESCO, Paris. (Originally published in 1972, with supplements added in 1973, 1975, 1977, and 1983.) [Section 5.6 covers salt balance and chemical composition of ground water]

Brown, K.W., J.C. Thomas, and M.W. Aurelius. 1985. Collecting and Testing Barrel Sized Undisturbed Soil Monoliths. Soil Sci. Soc. Am. J. 49:1067-1069.

Brown, K.W., J.C. Thomas, and M.W. Holder. 1988. Development of a Capillary Wick Unsaturated Zone Pore Water Sampler. EPA/600/4-88/001 (NTIS PB89-129100), 117 pp.

Bunneberg, C. and W. Kuhn. 1980. An Electrical Conductance Method for Determining Condensation and Evaporation Processes in Arid Soils with High Spatial Resolution. Soil Science 129-58-66.

Burns, C. 1992. The Use of Suction Lysimeters to Determine Contaminant Concentrations in Pore Water. Ground Water Management 13:371-384 (8th Focus Conf. Eastern GW Issues.) [Vacuum porous cup; wood treatment facility]

Cameron, D.R., E. DeJong, D.W.L. Read, and M. Oosterveld. 1981. Mapping Salinity Using Resistivity and Electromagnetic Inductive Techniques. Canadian J. Soil Science 61:67-78.

Cameron, K.C. et al. 1992. Lysimeters without Edge Flow: An Improved Design and Sampling Procedure. Soil Sci. Soc. Am. J. 56:1625-1628. [Monolith lysimeters]

Campbell, R., C. Bower, and L. Richards. 1948. Change of Electrical Conductivity with Temperature and the Relation of Osmotic Pressure to Electrical Conductivity and Ion Concentration for Soil Extracts. Soil Sci. Soc. Am. Proc. 13:66-69.

Cherry, J.A. and P.E. Johnson. 1982. A Multilevel Device for Monitoring in Fractured Rock. Ground Water Monitoring Review 2(3):41-44.

Chow, T.L. 1977a. A Porous Cup Soil-Water Sampler with Volume Control. Soil Science 124:173-176.

Chow, T. 1977b. Fritted Glass Bead Materials as Tensiometers and Tension Plates. Soil Sci. Soc. Am. J. 41-19-22.

Cochran, R. 1987. Underground Storage Tank Corrective Action Technologies. EPA/625/6-87/015 (NTIS PB87-171278), 205 pp.

Cochran, P.H., G.M. Marion, and A.L. Leaf. 1970. Variation in Tension Lysimeter Leachate Volumes. Soil Sci. Soc. Am. Proc. 34:309-311.

Cole, D.W. 1958. Alundum Tension Lysimeter. Soil Science 85:293-296.

Cole, D.W., S. Gessel, and E. Held. 1961. Tension Lysimeter Studies of Ion and Moisture Movement in Glacial Till and Coral Atoll Soils. Soil Sci. Soc. Am. J. 25:321-325.

Cook, P.G. and G.R. Walker. 1992. Depth Profiles of Electrical Conductivity from Linear Combinations of Electromagnetic Induction Measurements. Soil Sci. Soc. Am. J. 56:1015-1022.

Corey, A.T. 1957. Measurement of Water and Air Permeability in Unsaturated Soil. Soil Sci. Soc. Am. Proc. 11:93-99.

Corey, A.T. 1986. Air Permeability. In: Methods of Soil Analysis, Part 1, 2nd edition, A. Klute (ed.), ASA Monograph No. 9, American Society of Agronomy, Madison, WI, pp. 1121-1136. [Laboratory measurement]

Corwin, D.L. and J.D. Rhoades. 1982. An Improved Technique for Determining Soil Electrical Conductivity--Depth Relations From Above-Ground Electromagnetic Measurements. Soil Sci. Soc. Am. J. 46:517-520.

Corwin, D.L. and J.D. Rhoades. 1984. Measurement of Inverted Electrical Conductivity Profiles Using Electromagnetic Induction. Soil Sci. Soc. Am. J. 48:288-291.

Creasey, C.L. and S.J. Dreiss. 1985. Soil Water Samplers: Do They Significantly Bias Concentrations in Water Samples? In: Proc. NWWA Conf. on Characterization and Monitoring of the Vadose (Unsaturated) Zone, National Water Well Association, Dublin, OH, pp. 173-181.

Creasey, C.L. and S.J. Dreiss. 1988. Porous Cup Samplers: Cleaning Procedures and Potential Sample Bias from Trace Element Contamination. Soil Science 145:93-101.

Cullen, S.J., J.H. Kramer, L.G. Everett, and L.A. Eccles. 1992. Is Our Ground Water Monitoring Strategy Illogical? Ground Water Monitoring Review 12(3):103-107.

Dao, T.H. and T.L. Lavy. 1978. Extraction of Soil Solution Using a Simple Centrifugation Methods for Pesticide Adsorption-Desorption Studies. Soil Sci. Soc. Am. J. 42:375-377.

Davies, B.E. and R.J. Davies. 1963. A Simple Centrifugation Method for Obtaining Small Samples of Soil Solution. Nature 198:216-217.

Dazzo, F.B. and D.F. Rothwell. 1974. Evaluation of Porcelain Cup Water Samplers for Bacteriological Sampling. Applied Microbiology 27(6):1172-1174.

Debyle, N.V., R.W. Hennes, and G.E. Hart. 1988. Evaluation of Ceramic Cups for Determining Soil Solution Chemistry. Soil Science 146:30-36.

de Jong, E. 1976. Inexpensive Micro Soil Solution Sampler. Can. J. Soil Sci. 56:315-317.

de Jong, E., A.K. Ballantyne, D.R. Cameron, and D.W.L. Read. 1979. Measurement of Apparent Electrical Conductivity in Soils by an Electromagnetic Induction Probe to Aid Salinity Surveys. Soil Sci. Soc. Am. J. 43:810-812.

Devitt, D.A., R.B. Evans, W.A. Jury, T.H. Starks, B. Eklund, and A. Ghalsan. 1987. Soil Gas Sensing for Detection and Mapping of Volatile Organics. EPA/600/8-87/036 (NTIS PB87-228516).

Dorrance, D.W., L.G. Wilson, L.G. Everett, and S.J. Cullen. 1991. Compendium of In Situ Pore-Liquid Samplers for Vadose Zone. In: Groundwater Residue Sampling, R.G. Nash and A.R. Leslie (eds.), ACS Symposium Series 465, American Chemical Society, Washington, DC, pp. 300-331. [Vacuum/pressure vacuum porous cup, membrane filter, hollow fiber, vacuum plate]

Dugan, G.L., R.H.F. Young, L.S. Lau, P.C. Ekern, and P.C.S. Loh. 1975. Land Disposal if Wastewater in Hawaii. J. Water Pollut. Control Fed. 47(8):2067-87. [Porous-cup sampler]

Duke, H.R. and H.R. Haise. 1973. Vacuum Extractors to Assess Deep Percolation Losses and Chemical Constituents in Soil Water. Soil Sci. Soc. Am. Proc. 37:963-964.

Duke, H., E. Kruse, and G. Hutchinson. 1970. An Automatic Vacuum Lysimeter for Monitoring Percolating Rates. ARS 41-165, U.S. Dept. of Agriculture.

Dunlap, W.J., J.F. McNabb, M.R. Scalf, and R.L. Cosby. 1977. Sampling for Organic Chemicals and Microorganisms in the Subsurface. EPA/600/2-77/176 (NTIS PB272 679).

Durant, N.D., V.B. Myers, and L.A. Eccles. 1993. EPA's Approach to Vadose Zone Monitoring at RCRA Facilities. Ground Water Monitoring & Remediation 13(1):151-158

Durgin, P.B. and T.M. Young (eds.). 1993. Leak Detection for Underground Storage Tanks. ASTM STP 1161, American Society for Testing and Materials, Philadelphia, PA, 240 pp. [17 papers presented at symposium held in New Orleans in 1992]

Eckert, E.G., and J.W. Maresca, Jr. 1992. Acoustic Location of Leaks in Pressurized Underground Petroleum Pipelines. EPA/600/R-92/143 (NTIS PB92-207687).

Edlefson, N. and A. Anderson. 1941. The Four-Electrode Resistance Method for Measuring Soil Moisture Content Under Field Conditions. Soil Science 51:367-376.

Edmunds, W.M. and A.H. Bath. 1976. Centrifuge Extraction and Chemical Analysis of Interstitial Waters. Environ. Sci. Technol. 10:467-472.

Eklund, B. and W. Crow. 1987. Survey of Vendors of External Petroleum Leak Monitoring Devices for Use with Underground Storage Tanks. EPA/600/4-87/016 (NTIS PB87-212346), 149 pp.

Eleuterius, L. 1980. A Rapid In Situ Method of Extracting Water From Tidal Marsh Soils. Soil Sci. Soc. Am. J. 44:884-886. [Vacuum porous cup]

Elkhatib, E.A., O.L. Bennet, V.C. Baligar, and R.J. Wright. 1986. A Centrifuge Method for Obtaining Soil Solution Using an Immiscible Liquid. Soil Sci. Soc. Am. J. 40:329-331.

Elkhatib, E.A., J.L. Hern, and T.E. Staley. 1987. A Rapid Centrifugation Method for Obtaining Soil Solution. Soil Sci. Soc. Am. J. 51:578-583.

Enfield, C. and D. Evans. 1969. Conductivity Instrumentation for In Situ Measurement of Soil Salinity. Soil Sci. Soc. Am. Proc. 33:787-789.

England, C.B. 1974. Comments on "A Technique Using Porous Cups for Water Sampling at Any Depth in the Unsaturated Zone," by W.W. Wood. Water Resources Research 10:1049.

Evans, D.D. and D. Kirkham. 1949. Measurement of Air Permeability in Soil In Situ. Soil Sci. Soc. Am. Proc. 14:65.

Everett, L.G. 1990. Soil Pore-Liquid Monitoring. In: Subsurface Migration of Hazardous Wastes, by J.S. Devinny, L.G. Everett, J.S.C. Lu, and R.L. Stollar, Van Nostrand Reinhold, New York, NY, pp. 306-336.

Everett, L.G. and L.G. McMillion. 1985. Operational Ranges for Suction Lysimeters. Ground Water Monitoring Review 5(3):51-60.

Everett and Wilson (1986)–see U.S. EPA (1986).

Everett, L.G., L.G. Wilson, and L.G. McMillion. 1982. Vadose Zone Monitoring Concepts for Hazardous Waste Sites. Ground Water 20(3):312-324.

Everett, L.G., L.G. Wilson, and E.W. Hoylman. 1983. Vadose Zone Monitoring for Hazardous Waste Sites. EPA/600/x-83/064 (NTIS PB237 133).

Everett, L.G., E.W. Hoylman, L.G. Wilson, and L.G. McMillion. 1984. Constraints and Categories of Vadose Zone Monitoring Devices. Ground Water Monitoring Review 4(1):26-31.

Everett, L.G., L.G. McMillion, and L.A. Eccles. 1988. Suction Lysimeter Operation at Hazardous Waste Sites. In: Ground-Water Contamination: Field Methods, A.G. Collins and A.I. Johnson (eds.), ASTM STP 963, American Society for Testing and Materials, Philadelphia, PA, pp. 304-327.

Everett, L.G., S.J. Cullen, R.G. Fesler, D.W. Dorrance, and L.G. Wilson. 1990. Criteria for Selected Monitoring Devices and Indicator Parameters for Direct Pore-Liquid Sampling of Petroleum Liquid Hydrocarbon Contaminated Sites. EPA/600/4-90/035. U.S. EPA Environmental Monitoring Systems Laboratory, Las Vegas, NV.

Fenn, D., E. Cocozza, J. Isbister, O. Braids, and B. Yare. 1977. Procedures Manual for Ground Water Monitoring at Solid Waste Disposal Facilities. U.S. Environmental Protection Agency SW-611 (NTIS PB84-174820).

Floyd, C.M. 1993. UST Leak Detection a "Must" for Owners. Environmental Protection 4(4):32-38.

Flühler, H., A.J. Peck, and L.H. Stolzy. 1986. Air Pressure Measurement. In: Methods of Soil Analysis, Part 1, 2nd edition, A. Klute (ed.), Agronomy Monograph No. 9. American Society of Agronomy, Madison, WI, pp. 1161-1172.

Ford, P.J., P.J. Turina, and D.E. Seely. 1984. Characterization of Hazardous Waste Sites--A Methods Manual, Vol. II: Available Sampling Methods. EPA/600/4-84/076 (NTIS PB85-521596).

Fromme, C., B.P. Knape, and B. Thompson. 1991. Development of Remote Tank Inspection (RTI) Robotic System. In: 2nd Int. Symp. Field Screening Methods for Hazardous Wastes and Toxic Chemicals, EPA/600/9-91/028 (NTIS PB92-125764), pp. 197-204.

Gerhardt, R.A. 1977. Leachate Attenuation in the Unsaturated Zone Beneath Three Sanitary Landfills in Wisconsin. Wisconsin Geological and Natural History Survey Information Circular 35, 95 pp.

Gholson, A.R., J.R. Albritton, and R.K.M. Jayanty. 1989. Evaluation of the Flux Chamber Method for Measuring Volatile Organic Emissions from Surface Impoundments. EPA/600/3-89/008 (NTIS PB89-148589).

Gillman, G.P. 1976. A Centrifuge Method for Obtaining Soil Solution. Div. of Soils Rep. 16, Commonwealth Scientific and Industrial Research Organization (CSIRO), Adelaide, Australia.

Gilmore, A.G. 1959. A Soil Sampling Tube for Soil Microbiology. Soil Science 87:95-99.

Grier, H.E., W. Burton, and C. Tiwari. 1977. Overland Cycling of Animal Waste. In: Land as a Waste Treatment Alternative, Ann Arbor Science, Ann Arbor, MI, pp. 693-702. [Vacuum-suction samplers]

Groenewoud, H.V. 1968. Methods and Apparatus for Measuring Air Permeability of the Soil. Soil Science 106(4):275-279.

Grover, B.L. 1955. Simplified Air Permeameters for Soil in Place. Soil Sci. Soc. Am. Proc. 19:414-418.

Grover, B.L. and R.E. Lamborn. 1970. Preparation of Porous Ceramic Cups to Be Used for Extraction of Soil Water Having Low Solute Concentrations. Soil Sci. Soc. Am. Proc. 34:706-708.

Gupta, S.C. and R.J. Hanks. 1972. Influence of Water Content in Electrical Conductivity of the Soils. Soil Sci. Soc. Am. Proc. 36:835-857.

Haines, B.L., J.B. Waide, and R.L. Todd. 1982. Soil Solution Nutrient Concentrations Sampled with Tension and Zero-Tension Lysimeters: Report of Discrepancies. Soil Sci. Soc. Am. J. 46:658-661.

Halvorson, A.D. and C.A. Reule. 1976. Estimating Water Salinity with Geophysical Earth Resistivity Equipment. Soil Sci. Soc. Am. J. 40:152-153.

Halvorson, A.D. and J.D. Rhoades. 1974. Assessing Soil Salinity and Identifying Potential Saline Seep Areas with Field Soil Resistance Measurements. Soil Sci. Soc. Am Proc. 38:576-581.

Halvorson, A. and J. Rhoades. 1976. Field Mapping Soil Conductivity to Delineate Dryland Saline Seeps with Four-Electrode Technique. Soil Sci. Soc. Am. J. 40:571-575.

Halvorson, A.D., J.D. Rhoades, and C.A. Reule. 1977. Soil Salinity--Four Electrode Conductivity Relationships for Soils in the Northern Great Plains. Soil Sci. Soc. Am. J. 41:966-971.

Hansen, E.A. and A.R. Harris. 1974. A Ground-Water Profile Sampler. Water Resources Research 10(2):375.

Hansen, E.A. and A.R. Harris. 1975. Validity of Soil-Water Samples Collected with Porous Ceramic Cups. Soil Sci. Soc. Am. Proc. 39:528-536.

Hansen, E.A. and A.R. Harris. 1980. An Improved Technique for Spatial Sampling of Solutes in Shallow Ground-Water Systems. Water Resources Research 16(4):827-829.

Harris, A.R. and E.A. Hansen. 1975. A New Ceramic Cup Soil-Water Sampler. Soil Sci. Soc. Am. Proc. 39:157-158.

Havlena, J.A. and D.B. Stephens. 1992. Vadose Zone Characterization Using Field Permeameters and Instrumentation. In: Current Practices in Ground Water and Vadose Zone Investigations, ASTM STP 1118, D.M. Nielsen and M.N. Sara (eds.), American Society for Testing and Materials, Philadelphia, PA, pp. 93-110. [Air and gas permeameters]

Hendrickx, J.M.H., B. Baerends, Z.I. Raza, M. Sadig, and M. Akram Chaudhry. 1992. Soil Salinity Assessment by Electromagnetic Induction of Irrigated Land. Soil Sci. Soc. Am. J. 56:1933-1941.

Hergert, G.W. and D.C. Watts. 1977. Extraction Efficiency of Ceramic Candle Suction Systems Under Varying Soil Water Flux. Agronomy Abstracts (1977 Annual Meetings ASA, CSSA, SSSA), pp. 176-177.

Hoffman, G.J., et al. 1978. Minimizing Salt in Drain Water by Irrigation Management. Agricultural Water Management 1(3):233-252.

Holder, M., K.W. Brown, J.C. Thomas, D. Zabcik, and H.E. Murray. 1991. Capillary-Wick Unsaturated Zone Soil Pore Water Samplers. Soil Sci. Soc. Am. J. 55:1195-1202.

Hornby, W.J., J.D. Zabcik, and W. Crawley. 1986. Factors Which Affect Soil-Pore Liquid: A Comparison of Available Samplers with Two New Designs. Ground Water Monitoring Review 6(2):61-66.

Hounslow, A., J. Fitzpatrick, L. Cerrillo, and M. Freeland. 1978. Overburden Mineralogy as Related to Ground-Water Chemical Changes in Coal Strip Mining. EPA/600/7-78/156 (NTIS PB266-996). [Vacuum-pressure samplers]

Ingvalson, R., J. Oster, S. Rawlins, and G. Hoffman. 1970. Measurement of Water Potential and Osmotic Potential in Soil with a Combined Thermocouple Psychrometer and Salinity Sensor. Soil Sci. Soc. Am. Proc. 34:570-574.

Ingvalson, R.D., J.D. Rhoades, and A.L. Page. 1976. Correlation of Alfalfa Yield with Various Indices of Salinity. Soil Science 122:145-153.

Iskander, J. and Y. Nakano. 1978. Soil Lysimeters for Validating Models of Wastewater Renovation by Land Application. Special Report 78-12, U.S. Army Cold Regions Res. and Eng. Laboratory, Hanover, NH.

Izadi, M.T. and R.W. Stephenson. 1992. Measurement of Gas Permeability Through Clay Soils. In: Current Practices in Ground Water and Vadose Zone Investigations, ASTM STP 1118, D.M. Nielsen and M.N. Sara (eds.), American Society for Testing and Materials, Philadelphia, PA, pp. 331-345. [Laboratory test]

Jackson, D.R., F.S. Brinkley, and E.A. Bondietti. 1976. Extraction of Soil After Using Cellulose-Acetate Hollow Fibers. Soil Sci. Soc. Am. J. 40:327-329.

Jellick, G.J. and R.R. Schnabel. 1985. Field Determination of Gas Diffusion Coefficients. In: Proc. NWWA Conf. on Characterization and Monitoring in the Vadose (Unsaturated) Zone (2nd, Denver, CO), National Water Well Association, Dublin, OH, pp. 227-235.

Johnson, T.M. and K. Cartwright. 1980. Monitoring of Leachate Migration in the Unsaturated Zone in the Vicinity of Sanitary Landfills. Illinois State Geological Survey Circular 514, 82 pp.

Johnson, T.M., K. Cartwright, and R.M Schuller. 1981. Monitoring of Leachate Migration in the Unsaturated Zone in the Vicinity of Sanitary Landfills. Ground Water Monitoring Review 1(3):55-63.

Johnson, P.C., C.C. Stanley, M.W. Kemblowski, D.L. Byers, and J.D. Colthart. 1990. A Practical Approach to the Design, Operation, and Monitoring of In Situ Soil-Venting Systems. Ground Water Monitoring Review 10(2):159-178. [Field air permeability test]

Jordon, C.F. 1968. A Simple, Tension-Free Lysimeter. Soil Science 105:81-86.

Joslin, J.D., P.A. Mays, M.H. Wolfe, J.M. Kelly, R.W. Garber, and P.F. Brewer. 1987. Chemistry of Tension Lysimeter Water and Lateral Flow in Spruce and Hardwood Stands. J. Environ. Qual. 16:152-160.

Kachonoski, R.G., E.G. Gregorich, and I.J. Van Wesenbeeck. 1988. Estimating Spatial Variations of Soil Water Content Using Noncontacting Electromagnetic Inductive Methods. Can. J. Soil Sci. 68:715-722.

Kachonoski, R.G., E. Pringle, and A. Ward. 1992. Field Measurement of Solute Travel Times Using Time Domain Reflectometry. Soil Sci. Soc. Am. J. 56:47-52.

Kaufman, R.F., T.A. Gleason, R.B. Ellwood, and G.P. Lindsey. 1981. Ground-Water Monitoring Techniques for Arid Zone Hazardous Waste Disposal Sites. Ground Water Monitoring Review 1(3):47-54.

Kearl, P.M., T.A. Cronk, and N.E. Korte. 1988. An In Situ Technique for Measurement Soil-Gas Diffusivity. In: Proc. 1st International Symposium, Field Screening Methods for Hazardous Waste Site Investigations, EPA/600/D-89/189 (NTIS PB90-132572), pp. 149-153.

Kearl, P.M., R.J. Zinkl, and J.J. Dexter. 1990. Air Permeability Measurements of the Unsaturated Bandelier Tuff Near Los Alamos, New Mexico. J. Hydrology 117:225-240.

Keller, C. 1991. So, What Is the Practical Value of SEAMIST? Ground Water Management 5:59-73 (5th NOAC).

Keller, C. 1992. A Serious Vadose Defense of Ground Water from Landfill Contamination--New Concept, Old Principles. Ground Water Management 11:73-85 (6th NOAC). [SEAMIST]

Keller, C. and B. Lowry. 1990. A New Vadose Fluid Sampling System for Uncased Holes. Ground Water Management 2:3-10 (4th NOAC).

Keller, C. and B. Lowry. 1991. SEAMIST--A Technique for Rapid and Effective Screening of Contaminated Waste Sites. In: 2nd Int. Symp. Field Screening Methods for Hazardous Wastes and Toxic Chemicals, EPA/600/9-91/028 (NTIS PB92-125764), pp. 693-695.

Kemper, W. 1959. Estimation of Osmotic Stress in Soil Water from the Electrical Resistance of Finely Porous Ceramic Units. Soil Science 87:345-349.

Kerfoot, W.B. 1991. Site Use of Advective Flux Probes for Enhanced Soil Gas Analysis by In-Situ Steam Distillation. Ground Water Management 7:729-734 (Focus Conference on Easter Regional Ground Water Issues).

Kerfoot, H.B. and L.J. Barrows. 1987. Soil Gas Measurement for Detection of Subsurface Organic Contaminants. EPA/600/2-87/027 (NTIS PB87-174884).

Kinniburgh, D.G. and D.L. Miles. 1983. Extraction and Chemical Analysis of Water from Rocks. Environ. Sci. Technol. 17:362-368.

Kirkham, D. 1946. Field Methods for Determination of Air Permeability in Soil in Its Undisturbed State. Soil Sci. Soc. Am. Proc. 11:93-99.

Kirkham, D. and G.S. Taylor. 1950. Some Tests on a Four-Electrode Probe for Soil Moisture Measurement. Soil Sci. Soc. Am. Proc. 14:42-46.

Kittrick, J.A. 1980. Gibbsite and Kaolinite Solubilities by Immiscible Displacement of Equilibrium Solutions. Soil Sci. Soc. Am. J. 44:139-142.

Kittrick, J.A. 1983. Accuracy of Several Immiscible Displacement Liquids. Soil Sci. Soc. Am. J. 47:1045-1047.

Klute, A. and J. Letey. 1958. The Dependence of Ionic Diffusion on the Moisture Content of Non-Adsorbing Porous Media. Soil Sci. Soc. Am. Proc. 22:79-82.

Kmet, P. and D.E. Lindorff. 1983. The Use of Collection Lysimeters in Monitoring Sanitary Landfill Performance. In: Proc. NWWA Conf. on Characterization and Monitoring of the Vadose (Unsaturated) Zone, National Water Well Association, Dublin, OH, pp. 554-579.

Knighton, M.D. and P.E. Streblow. 1981. A More Versatile Soil Water Sampler. Soil Sci. Soc. Am. J. 45:158-159.

Kohnke, H., F.R. Feibelbis, and J.M. Davidson. 1940. A Survey and Discussion of Lysimeters and a Bibliography on Their Construction and Performance. U.S. Dept. Agric. Misc. Publ. 372.

Krone, R.B., H.F. Ludwing and J.F. Thomas. 1951. Porous Tube Device for Sampling Soil Solutions During Water-Spreading Operations. Soil Science 73:211-219.

Kung, K.-J.S. and S.V. Donohue. 1991. Improved Solute-Sampling Protocol in a Sandy Vadose Zone Using Ground-Penetrating Radar. Soil Sci. Soc. Am. J. 55:1543-1545.

Leach, L.W., F.P. Beck, J.T. Wilson and D.H. Kampbell. 1988. Aseptic Subsurface Sampling Techniques for Hollow-Stem Auger Drilling. In: 2nd Nat. Outdoor Action Conf. on Aquifer Restoration, Ground Water Monitoring and Geophysical Methods, National Water Well Association, Dublin, OH, pp. 31-51.

Levin, M.J. and D.R. Jackson. 1977. A Comparison of In-Situ Extractors for Sampling of Soil Water. Soil Sci. Soc. Am. J. 41:535-536.

Linden, D.R. 1977. Design, Installation and Use of Porous Ceramic Samplers for Monitoring Soil-Water Quality. U.S. Dept. Agric. Tech. Bull. 1562.

Litaor, M.I. 1988. Review of Soil Solution Samplers. Water Resources Research 24(5):727-733.

Loftfield, N.S., R. Brumme, and F. Beese. 1992. Automated Monitoring of Nitrous Oxide and Carbon Dioxide Flux from Forest Soils. Soil Sci. Soc. Am. J. 56:1147-1150.

Long, F.L. 1978. A Glass Filter Soil Solution Sampler. Soil Sci. Soc. Am. J. 42-834-835.

Lowry, W.E. and S.M. Narbutobskih. 1991. High Resolution Gas Permeability Measurements with the SEAMIST System. Ground Water Management 5:685-698 (5th NOAC).

Lucas, J.L. and G.M. Reeves. 1980. An Investigation into High Nitrate in Groundwater and Land Irrigation of Sewage. Prog. Water Tech. 13:81-88.

Lusczynski, N.J. 1961. Filter-Press Method of Extracting Water Samples for Chloride Analysis. U.S. Geological Survey Water Supply Paper 1533-A.

Lyman, W.J. and D.C. Noonan. 1990. Assessing UST Corrective Action Technologies: Site Assessment and Selection of Unsaturated Zone Treatment Technologies. EPA/600/2-90/011 (NTIS PB90-187220), 119 pp. [Site assessment, monitoring, soil venting, biorestoration, soil flushing, hydraulic barriers and excavation]

Mallon, B., S.A. Martins, J.L. Houpis, W. Lowry, and C.D. Cremer. 1992. SEAMIST® Soil Sampling for Tritiated Water: First Year's Results. Ground Water Management 11:161-175 (6th NOAC).

Manheim. F.T. 1966. A Hydraulic Squeezer for Obtaining Interstitial Water from Consolidated and Unconsolidated Sediments. U.S. Geological Survey Processional Paper 550-C, pp. C256-C261.

Maresca, J.W. and R.W. Hillger. 1991. Chemicals Stored in USTs: Characteristics and Leak Detection. EPA/600/2-91/042 (NTIS PB91-219592), 69 pp.

Maresca, Jr., J.W., R.M. Smedfjeld, R.F. Wise, and J.W. Starr. 1991. Standard Test Procedure for Evaluation Leak Detection Methods: Pipeline Leak Detection Systems. EPA/600/2-90/050 (NTIS PB91-106245).

Marrin, D.L., J.J. Adriany, and A.J. Bode. 1991. Estimating Small-Scale Differences in Air Permeability and Redox Conditions for the Design of Bioventing Systems. Ground Water Management 8:457-465 (8th NWWA/API Conf.).

Matthias, A.D., A.M. Blackmer, and J.M. Bremner. 1980. A Simple Chamber Technique for Field Measurement of Emissions of Nitrous Oxide from Soils. J. Environ. Qual. 9:251-256.

McBride, R.A., A.M. Gordon, and S.C. Shrive. 1990. Estimating Forest Soil Quality from Terrain Measurements of Apparent Electrical Conductivity. Soil Sci. Soc. Am. J. 54:290-293. [EMI sensor]

McGuire, P.E. and B. Lowery. 1992. Evaluation of Several Vacuum Solution Samplers in Sand and Silt Loam at Several Water Potentials. Ground Water Monitoring Review 12(4):151-160. [Ceramic, fritted-glass, stainless steel, and PTFE porous cup samplers]

McGuire, P.E., B. Lowery, and P.A. Helmke. 1992. Potential Sampling Error: Trace Metal Adsorption on Vacuum Porous Cup Samplers. Soil Sci. Soc. Am. J. 56:74-82.

McMichael, F.L. and S.E. McKee. 1966. Wastewater Reclamation at Whittier Narrows. State of California Water Quality Publication No. 33. [Caisson free drainage sampler]

Merek, T.H., A.D. Schneider, T.A. Howell, and L.L. Ebling. 1988. Design and Construction of Large Monolith Lysimeters. Trans. Am. Soc. Agric. Eng. 31:477-484.

Merry, W.M. and C.M. Palmer. 1985. Installation and Performance of a Vadose Zone Monitoring System. In: Proc. NWWA Conf. on Characterization and Monitoring of the Vadose (Unsaturated) Zone, National Water Well Association, Worthington, OH, pp. 75-80.

Miller, S.A. 1992. Monitoring Contaminant Removal and Migration Beneath Grass Lined, Storm Runoff Infiltration Basins. Ground Water Management 13:395-405 (Proc. [8th] Focus Conf. Eastern GW Issues). [Porous-cup vacuum, perched water table, buried cup free drainage sampler]

Montgomery, B.R., L. Prunty, and J.W. Bauder. 1987. Vacuum Trough Extractors for Measuring Drainage and Nitrate Flux Through Sandy Soils. Soil Sci. Soc. Am. J. 51:271-276. [Filter candle]

Moran, S.R., G.H. Groenewold, and J.A. Cherry. 1978. Geologic, Hydrologic, and Geochemical Concepts and Techniques in Overburden Characterization for Mined-Land Reclamation. Report of Investigation No. 63, North Dakota Geological Survey, 152 pp.

Morrison, R.D. 1982. A Modified Vacuum-Pressure Lysimeter for Soil Water Sampling. Soil Science 134(3):206-210.

Morrison, R.D. 1983. Ground-Water Monitoring Technology: Procedures, Equipment and Applications. Timco Mfg., Prairie du Sac, WI, 111 pp. (Note footnote in Section 9.2.1 concerning Teflon suction samplers.)

Morrison, R.D. and B. Lowery. 1990. Sampling Radius of a Porous Cup Sampler: Experimental Results. Ground Water 28(2):262-267.

Morrison, R. and D. Mioduszewski. 1986. Soil Moisture Monitoring and Sample Probe for Underground Storage Tanks and Surface Impoundments. In: Hazardous and Industrial Solid Waste Testing and Disposal: 6th Volume, Lorenzen, D. et al. (eds.), ASTM STP 933, American Society for Testing and Materials, Philadelphia, PA, pp. 343-352.

Morrison, R. and J. Szecsody. 1985. Sleeve and Casing Lysimeters for Soil Pore Water Sampling. Soil Science 139:446-451. [Vacuum-pressure porous cup]

Morrison, R. and J. Szecsody. 1987. A Tensiometer and Pore Water Sampler for Vadose Zone Monitoring. Soil Science 144:367-372.

Morrison, R.D. and T.C. Tsai. 1981. Modified Vacuum-Pressure Lysimeter for Vadose Zone Sampling. Calscience Research, Inc., Huntington Beach, CA.

Mualem, Y. and S.P. Friedman. 1991. Theoretical Prediction of Electrical Conductivity in Saturated and Unsaturated Soils. Water Resources Research 27:2771-2777.

Mubarak, A. and R.A. Olsen. 1976. Immiscible Displacement of the Soil Solution by Centrifugation. Soil Sci. Soc. Am. J. 40:329-331.

Mubarak, A. and R.A. Olsen. 1977. A Laboratory Technique for Appraising In Situ Salinity of Soil. Soil Sci. Soc. Am. J. 41:1018-1020.

Nadler, A. 1981. Field Application of the Four-Electrode Technique for Determining Soil Solution Conductivity. Soil Sci. Soc. Am. J. 45:30-34.

Nadler, A. 1991. The Effect of Soil Structure on Bulk Soil Electrical Conductivity (EC_a) Using the TDR and 4P Techniques. Soil Science 152:199-203.

Nadler, A. and H. Frenkel. 1980. Determination of Soil Solution Electrical Conductivity from Bulk Soil Electrical Conductivity Measurements by the Four-Electrode Method. Soil Sci. Soc. Am. J. 44:1216-1221.

Nadler, A., M. Margaritz, Y. Lapid, and Y. Levy. 1982. A Simple System for Repeated Soil Resistance Measurements at the Same Spot. Soil Sci. Soc. Am. J. 46:661-663.

Nadler, A., H. Frenkel., and A. Mantell. 1984. Applicability of the Four-Electrode Technique Under Extremely Variable Water Contents and Salinity Distribution. Soil Sci. Soc. Am. J. 48:1258-1261.

Nadler, A., M. Magaritz, and A. Naor. 1990. Effect of Instrument Parameters on the Accuracy of Bulk Soil Electrical Conductivity Measurement. Soil Science 150:413-418. [Four-electrode method]

Nagpal, N.K. 1982. Comparison Among and Evaluation of Ceramic Porous Cup Soil Water Samplers for Nutrient Transport Studies. Can. J. Soil Sci. 62:685-694.

Narasimhan, T.N. and S.J. Dreiss. 1986. A Numerical Technique for Modeling Transient Flow of Water to a Soil Water Sampler. Soil Science 141:230-236.

Neary, A.J. and F. Tomassini. 1985. Preparation of Alundum/Ceramic Plate Tension Lysimeters for Soil Water Collection. Can. J. Soil Sci. 65:169-177.

Niaki, S. and J.A. Broscius. 1986. Underground Tank Leak Detection Methods: A State-of-the-Art Review. EPA/600/2-86/001 (NTIS PB86-137155). [Covers more than 30 methods]

Nielsen, D.M. 1991. An Update on the ASTM Subcommittee on Ground Water and Vadose Zone Investigations. Ground Water Monitoring Review 11(3):92-96.

Nielsen, D. and R. Phillips. 1958. Small Fritted Glass Bead Plates for Determination of Moisture Retention. Soil Sci. Soc. Am. Proc. 22:574-575.

Nightingale, H.I., D. Harrison, and J.E. Salo. 1985. An Evaluation of Techniques for Ground Water Quality Beneath Urban Runoff Retention and Percolation Basins. Ground Water Monitoring Review 5(1):43-50.

Oster, J.D. and R.D. Ingvalson. 1967. In Situ Measurement of Soil Salinity with a Sensor. Soil Sci. Soc. Am. Proc. 31:572-574.

Oster, J.D. and L.S. Willardson. 1971. Reliability of Salinity Sensors for the Management of Soil Salinity. Agronomy Journal 63:695-698.

Oster, J.D., L.S. Willardson, and G.J. Hoffman. 1973. Sprinkling and Ponding Techniques for Reclaiming Saline Soils. Trans. Am. Soc. Agric. Eng. 16:89-91.

Oster, J.D., L.S. Willardson, J. van Schilfgaarde, and J.O. Goertzen. 1976. Irrigation Control Using Tensiometers and Salinity Sensors. Trans Am. Soc. Agric. Eng. 19:294-298.

Parizek, R. and B. Lane. 1970. Soil-Water Sampling Using Pan and Deep Pressure Vacuum Lysimeters. J. Hydrology 11(1):1-21.

Parker, J.C. and M.Th. Van Genuchten. 1984. Flux-Averaged and Volume-Averaged Concentrations in Continuum Approaches to Solute Transport. Water Resources Research 20:866-872.

Patterson, R.J., S.K. Frape, L.S. Dykes, and R.A. McLeod. 1978. A Coring and Squeezing Technique for the Detailed Study of Subsurface Water Chemistry. Can. J. Earth Science 15:162-169.

Persson, L. and L. Bergström. 1991. Drilling Methods for Collection of Undisturbed Soil Monoliths. Soil Sci. Soc. Am. J 55:285-287.

Peters, C.A. and R.W. Healy. 1988. The Representativeness of Pore Water Samples Collected from the Unsaturated Zone Using Pressure-Vacuum Lysimeters. Ground Water Monitoring Review 8(2):96-101.

Phelps, T.J., C.B. Fliermans, S.M. Pfiffner, and D.C. White. 1989. Recovery of Deep Subsurface Sediments for Microbiological Studies. J. Microbiol. Method. 9:267-279.

Philip, J.R. 1973. On Solving the Unsaturated Flow Equation: 1. The Flux-Concentration Relation. Soil Science 116:328-335.

Phillips, I.R. and W.J. Bond. 1989. Extraction Procedure for Determining Solution and Exchangeable Ions on the Same Soil Sample. Soil Sci. Soc. Am. J. 53:1294-1297.

Pickens, J.F., J.A. Cherry, G.E. Grisak, W.F. Merritt, and B.A. Risto. 1978. A Multi-Level Device for Ground-Water Sampling and Piezometric Monitoring. Ground Water 16:322-327.

Pickens, J.F., J.A. Cherry, R.M. Coupland, G.E. Grisak, W.F. Merritt, and B.A. Risto. 1981. A Multi-Level Device for Ground-Water Sampling. Ground Water Monitoring Review 1(1):48-51.

Pirkle, R.J., D.E. Wyatt, V. Price, and B.B. Looney. 1992. Barometric Pumping: The Connection Between the Vadose Zone and the Atmosphere. Ground Water Management 13:427-439 (8th Focus Conf. Eastern GW Issues).

Pitchford, A.M., A.T. Mazzella, and K.R. Scarbrough. 1988. Soil-Gas and Geophysical Techniques for Detection of Subsurface Organic Contamination. EPA/600/4-88/019 (NTIS PB88-208194).

Politeka, N.N., K. Roth, and W.A. Jury. 1992. Interpretation of Soil Transport Data Obtained with Fiberglass Wick Soil Solution Samplers. Soil Sci. Soc. Am. J. 56:1751-1753.

Portnoff, M.A., R. Grace, A.M. Guzman, and J. Hibner. 1991. Measurement and Analysis of Adsistor and Figaro Gas Sensors Used for Underground Storage Tank Leak Detection. In: 2nd Int. Symp Field Screening Methods for Hazardous Waste and Toxic Chemicals, EPA/600/9-91/028 (NTIS PB92-125764), pp. 741-745.

Pratt, P.F., J.E. Warnke, and P.A. Nash. 1976. Sampling the Unsaturated Zone in Irrigated Field Plots. Soil Sci. Soc. Am. J. 40:277-279.

Quin, B.F. and L.J. Forsythe. 1976. All-Plastic Suction Lysimeters for the Rapid Sampling of Percolating Soil Water. New Zealand J. of Science 19:145-148. [Nylon mesh]

Radulovich, R. and P. Sollins. 1987. Improved Performance of Zero-Tension Lysimeters. Soil Sci. Soc. Am. J. 51:1386-1388.

Rector, H.E. 1991. An Assessment of Soil-Gas Measurement Technologies. EPA/600/8-91/050 (NTIS PB91-219568), 85 pp. [Radon detection]

Reeve, R.C. 1953. A Method for Determining the Stability of Soil Structure Based Upon Air and Water Permeability Measurements. Soil Sci. Soc. Am. Proc. 17:324-329.

Reeves, R.C. and E.J. Doering. 1965. Sampling the Soil Solution for Salinity Appraisals. Soil Science 99:339-344.

Rehm, B.W., B.J. Christel, T.R. Stolzenburg, D.G. Nichols, B. Lowery, and B.J. Andraski. 1987. Field Evaluation of Instruments for the Measurement of the Unsaturated Hydraulic Properties of Fly Ash. EPRI EA-5011, Electric Power Research Institute. [Moisture: gravimetric, resistance cells, neutron probe; Matric potential: tensiometers, resistance cells; Pore water sampling: pressure-vacuum samplers, glass-block free drainage samplers]

Reicosky, D., R. Millington, and D. Peters. 1970. A Salt Sensor for Use in Saturated and Unsaturated Soils. Soil Sci. Soc. Am. Proc. 33:214-217.

Reitmeyer, R.F. 1946. Effect of Moisture Content on the Dissolved and Exchangeable Ions of Soils of Arid Regions. Soil Science 61(3):195-214.

Rhoades, J.D. 1972. Quality of Water for Irrigation. Soil Science 113:277-284.

Rhoades, J.D. 1978. Monitoring Soil Salinity: A Review of Methods. In: Establishment of Water Quality Monitoring Programs, L.G Everett and K.D. Schmidt (eds.), American Water Resources Association, St. Paul, MN, pp. 150-165.

Rhoades, J.D. 1979. Inexpensive Four-Electrode Probe for Monitoring Soil Salinity. Soil Sci. Soc. Am. J. 43:817-818.

Rhoades, J.D. 1980. Determining Leaching Fraction from Field Measurements of Soil Electrical Conductivity. Agricultural Water Management 3:205-215.

Rhoades, J. 1981. Predicting Bulk Soil Electrical Conductivity Versus Saturation Paste Extract Electrical Conductivity Calibrations for Soil Properties. Soil Sci. Soc. Am. J. 45:42-44.

Rhoades, J.D. 1982. Soluble Salts. In: Methods of Soil Analysis, Part 2, 2nd edition, A.L. Page, R.H. Miller, and D.R. Keeney (eds.), Agronomy Monograph No. 9, American Society of Agronomy, Madison, WI, pp. 167-179.

Rhoades, J.D. 1984. Principles and Methods of Monitoring Soil Salinity. In: Soil Salinity Under Irrigation--Processes and Management, Vol. 5, I. Shainberg and J. Shalhevet (eds.), Springer Verlag, Berlin.

Rhoades, J.D. and L. Bernstein. 1971. Chemical, Physical and Biological Characteristics of Irrigation and Soil Water. In: Water and Water Pollution Handbook, Vol. 1, L.L. Ciaccio (ed.), Marcel Dekker, New York, NY, pp. 142-222.

Rhoades, J.D. and D.L. Corwin. 1981. Determining Soil Electrical Conductivity-Depth Relations Using an Inductive Electromagnetic Soil Conductivity Meter. Soil Sci. Soc. Am. J. 45:255-260.

Rhoades, J.D. and A.D. Halvorson. 1977. Electrical Conductivity Methods for Detecting and Delineating Salines Seeps and Measuring Salinity in Northern Great Plains Soils. U.S. Dept. Agric. Rept. ARS W-42.

Rhoades, J.D. and R.D. Ingvalson. 1971. Determining Salinity in Field Soils with Soil Resistance Measurements. Soil Sci. Soc. Am. Proc. 35:54-60.

Rhoades, J.D. and J.D. Oster. 1986. Solute Content. In: Methods of Soil Analysis, Part 1, 2nd edition, A. Klute (ed.), Agronomy Monograph No. 9, American Society of Agronomy, Madison, WI, pp. 985-1006.

Rhoades, J.D. and J. van Schilfgaarde. 1976. An Electrical Conductivity Probe for Determining Soil Salinity. Soil Sci. Soc. Am. J. 40:647-651.

Rhoades, J.D., P.A.C. Raats, and R.J. Prather. 1976. Effects of Liquid-Phase Electrical Conductivity, Water Content, and Surface Conductivity on Bulk Soil Electrical Conductivity. Soil Sci. Soc. Am. J. 40:651-655.

Rhoades, J.D., M.T. Kaddah, A.D. Halvorson, and R.J. Prather. 1977. Establishing Soil Electrical Conductivity-Salinity Using Four-Electrode Cells Containing Undisturbed Soil Cores. Soil Science 123:137-141.

Rhoades, J.D., N.A. Manteghi, P.J. Shouse, and W.J. Alves. 1989a. Soil Electrical Conductivity and Soil Salinity: New Formulations and Calibrations. Soil Sci. Soc. Am. J. 53:433-439.

Rhoades, J.D., N.A. Manteghi, P.J. Shouse, and W.J. Alves. 1989b. Estimating Soil Salinity from Saturated Soil-Paste Electrical Conductivity. Soil Sci. Soc. Am. J. 53:428-433.

Rhoades, J.D., B.L. Waggoner, P.J. Shouse, and W.J. Alves. 1989c. Determining Soil Salinity from Soil and Soil-Paste Electrical Conductivities: Sensitivity Analysis of Models. Soil Sci. Soc. Am. J. 53:1368-1374.

Rhoades, J.D., P.J. Shouse, W.J. Alves, N.A. Manteghi, and S.M. Lesch. 1990. Determining Soil Salinity from Soil Electrical Conductivity Using Different Models and Estimates. Soil Sci. Soc. Am. J. 54:46-54.

Rible, J.M., P.A. Nash, P.F. Pratt, and L.S. Lund. 1976. Sampling the Unsaturated Zone of Irrigated Lands for Reliable Estimates of Nitrate Concentrations. Soil Sci. Soc. Am. J. 40:566-570.

Richard, T.L. and T.S. Steenhuis. 1988. Tile Drain Sampling of Preferential Flow on a Field Scale. J. Contaminant Hydrology 3:307-325.

Richards, L.A. (ed.). 1954. Diagnosis and Improvement of Saline and Alkali Soils. U.S. Dept. of Agric. Handbook 60, 160 pp.

Richards, L.A. 1966. A Salinity Sensor of Improved Design. Soil Sci. Soc. Am. Proc. 30:333-337.

Richards, L.A. and R. Campbell. 1948. Use of Thermistors for Measuring the Freezing Point of Solutions and Soils. Soil Science 65:429-436.

Richter, G. and W.A. Jury. 1986. A Microlysimeter Field Study of Solute Transport through a Structured Sand Loam Soil. Soil Sci. Soc. Am. J. 50:863-868.

Riekerk, H. and L.A. Morris. 1983. A Constant-Potential Soil Water Sampler. Soil. Sci. Soc. Am. J. 47:606-608. [Vacuum-porous cup]

Robbins, G.A. 1990. A Manual for Conducting Field Screening for Subsurface Gasoline Contamination. EPA/600/8-90/067. U.S. EPA Environmental Monitoring Systems Laboratory, Las Vegas, NV.

Robbins, G.A. and M.M. Gemmell. 1985. Factors Requiring Resolution in Installing Vadose Zone Monitoring Systems. Ground Water Monitoring Review 5(3):75-80.

Rogers, V.C. and K.K. Nielsen. 1991. Correlation of Florida Soil-Gas Permeabilities with Grain Size, Moisture and Porosity. EPA/600/8-91/039 (NTIS PB91-211904).

Rolston, D.E. 1986a. Gas Diffusivity. In: Methods of Soil Analysis, Part 1, 2nd edition, A. Klute (ed.), ASA Monograph No. 9, American Society of Agronomy, Madison, WI, pp. 1089-1102.

Rolston, D.E. 1986b. Gas Flux. In: Methods of Soil Analysis, Part 1, 2nd edition, A. Klute (ed.), ASA Monograph No. 9, American Society of Agronomy, Madison, WI, pp. 1103-1119.

Rolston, D.E., R.D. Glauz, G.L. Grundmann, and D.T. Louie. 1991. Evaluation of an In Situ Method for Measurement of Gas Diffusivity in Surface Soils. Soil Sci. Soc. Am. J. 55:1536-1542.

Roth, K., H. Flühler, W.A. Jury, and J.C. Parker (eds.). 1990. Field-Scale Water and Solute Flux in Soils. Birkhäuser Verlag, Boston, MA. [26 papers]

Roux, P.H. 1978. Electrical Resistivity Evaluations at Solid Waste Disposal Facilities. EPA/SW-729, 93 pp.

Russell, A.E. and J.J. Ewel. 1885. Leaching from a Tropical Andept During Big Storms: A Comparison of Three Methods. Soil Science 139:181-189.

Russell, B.F., T.J. Phelps, W.T. Griffin, and K.A. Sargent. 1992. Procedures for Sampling Deep Subsurface Microbial Communities in Unconsolidated Sediments. Ground Water Monitoring Review 12(1):96-104. [Wireline core sampler]

Sai, J.O. and D.C. Anderson. 1991. State-of-the-Art Field Hydraulic Conductivity Testing of Compacted Soils. EPA/600/2-91/022 (NTIS PB91-206243), 95 pp.

Scalf, M.R., J.F. McNabb, W.J. Dunlap, R.L. Cosby, and J. Fryberger. 1981. Manual of Ground-Water Quality Sampling Procedures. EPA/600/2-81/160 (NTIS PB82-103045). (Also published in NWWA/EPA Series, National Water Well Association, Dublin, OH.)

Scheinfeld, R.A. and T.G. Schwendeman. 1985. The Monitoring of Underground Storage Tanks: Current Technology. In: Proc. 2nd NWWA/API Petroleum Hydrocarbons and Organic Chemicals in Ground Water-Prevention, Detection and Restoration Conf., National Water Well Association, Dublin, OH, pp. 244-264.

Scheinfeld, R.A., J.B. Robertson, and T.G. Schwendeman. 1986. Underground Storage Tank Monitoring: Observation Well Based Systems. Ground Water Monitoring Review 6(4):49-55.

Schmidt, C. and E. Clements. 1978. Reuse of Municipal Wastewater for Groundwater Recharge. U.S. Environmental Protection Agency Contract 68-03-2140 (NTIS PB272-620). [Appendix A describes field investigations using caisson lysimeters]

Schneider, B.J. and E.T. Oaksford. 1986. Design and Monitoring Capability of an Experimental Artificial-Recharge Facility at East Meadow, Long Island, New York. U.S. Geological Survey Open File Report 84-070. [Caisson lysimeter]

Schneider, B.J., J. Oliva, H.F.H. Ku, and E.T. Oaksford. 1983. Monitoring the Movement and Chemical Quality of Artificial-Recharge Water in the Unsaturated Zone on Long Island, New York. In: Proc. NWWA Conf. on Characterization and Monitoring of the Vadose (Unsaturated) Zone, National Water Well Association, Worthington, OH, pp. 383-410. [Caisson lysimeter]

Schwendeman, T.G. and H.K. Wilcox. 1987. Underground Storage Systems: Leak Detection and Monitoring. Lewis Publishers, Chelsea, MI, 213 pp.

Severson, R.C. and D.F. Grigal. 1976. Soil Solutions Concentrations: Effect of Extraction Time Using Porous Ceramic Cups Under Constant Tension. Water Resources Bulletin 12:1161-1170.

Shaffer, K.A., D.D. Fritton, and D.E. Baker. 1979. Drainage Water Sampling in a Wet, Dual-Pore Soil System. J. Environ. Qual. 8:241-246.

Shainberg, I., J.D. Rhoades, and R.J. Prather. 1980. Effect of Exchangeable Sodium Percentage and Cation Exchange Capacity, and Soil Solution Concentration on Soil Electrical Conductivity. Soil Sci. Soc. Am. J. 44:469-473.

Shea, P.F. and J.N. Luthin. 1961. An Investigation of the Use of the Four-Electrode Probe for Measuring Soil Salinity in Situ. Soil Sci. 92:331-339.

Shimshi, D. 1966. Use of Ceramic Points for the Sampling of Soil Solution. Soil Science 101:98-103.

Shuford, J., D. Fritton, and D. Baker. 1977. Nitrate-Nitrogen and Chloride Movement Through Undisturbed Field Soil. J. Environ. Qual. 6:255-259.

Silkworth, G.R. and D.F. Grigal. 1981. Field Comparison of Soil Solution Samplers. Soil Sci. Soc. Am. J. 45:440-442.

Smith, C.N. and R.F. Carsel. 1986. A Stainless-Steel Soil Solution Sampler for Monitoring Pesticides in the Vadose Zone. Soil Sci. Soc. Am. J. 50:263-275. [Vacuum-porous cup]

Smith, J.L. and D.M. McWhorter. 1977. Continuous Subsurface Injection of Liquid Organic Wastes. In: Land as a Waste Treatment Alternative, Ann Arbor Science, Ann Arbor, MI, pp. 646-656. [Ceramic filter candle]

Smith, S.A., G.S. Small, T.S. Phillips, and M. Clester. 1982. Water Quality in the Salt River Project: A Preliminary Report. Salt River Project Water Resource Operations, Ground Water Planning Division, Phoenix, AZ. [Cascading perched groundwater sampling]

Soil Conservation Service (SCS). 1984. Procedures for Collecting Soil Samples and Methods of Analysis for Soil Survey. Soil Survey Investigations Report No. 1. U.S. Government Printing Office.

Springer, D.S., S.J. Cullen, and L.G. Everett. 1991. Determining Air Permeability Under Controlled Soil Water Conditions. Ground Water Management 5:119-129 (5th NOAC).

Starr, M.R. 1985. Variations in the Quality of Tension Lysimeter Soil Water Samples from a Finnish Forest Soil. Soil Science 140:453-461.

Starr, J.L., H.C. DeRoo, C.R. Frink, and J.-Y. Parlange. 1978. Leaching Characteristics of a Layered Field Soil. Soil Sci. Soc. Am. J. 42:386-391. [Vacuum-pressure sampler]

Starr, J.L., J.J. Meisinger, and T.B. Parkin. 1991a. Experiences and Knowledge Gained from Vadose Zone Sampling. In: Groundwater Residue Sampling, R.G. Nash and A.R. Leslie (eds.), ACS Symposium Series 465, American Chemical Society, Washington, DC, pp. 279-289. [Suction samplers, tile lines, pan lysimeter, water table sampling]

Starr, J.W., R.F. Wise, and J.W. Maresca. 1991b. Volumetric Leak Detection in Large Underground Storage Tanks, Vol 1. EPA/600/20-91/044A (NTIS PB92-114966).

Stearns, R., T. Tsai, and R. Morrison. 1980. Validity of the Porous Cup Vacuum/Suction Lysimeter as a Sampling Tool for Vadose Zone Waters. Univ. of Southern Calif. Environ. Eng. Lab., CE 513, 11 pp.

Stevenson, C.D. 1978. Simple Apparatus for Monitoring Land Disposal Systems by Sampling Percolating Soil Waters. Environ. Sci. Technol. 12:329-331.

Stonetrom, D.A. and J. Rubin. 1989. Air Permeability and Trapped-Air Content in Two Soils. Water Resources Research 25(9):1959-1969.

Suarez, D.L. 1986. A Soil Water Extractor that Minimizes CO2 Degassing and pH Errors. Water Resources Research 22:876-880.

Suarez, D.L. 1987. Prediction of pH Errors in Soil-Water Extractors Due to Degassing. Soil Sci. Soc. Am. J. 51:64-68.

Tadros, V.T. and J.W. McGarity. 1976. A Method for Collecting Soil Percolate and Soil Solution in the Field. Plant and Soil 44:655-667.

Talsma, T., P.M. Hallam, and R.S. Mansell. 1979. Evaluation of Porous Cup Soil-Water Extractors, Physical Factors. Aust. J. Soil Res. 17:417-422.

Tanner, C.B., S.J. Bourget, and W.E. Holmes. 1954. Moisture Tension Plates Constructed from Alundum Filter Discs. Soil Sci. Soc. Am. Proc. 18:222-223.

Thomas, G.W. and B.J. Barfield. 1974. The Unreliability of Tile Effluent for Monitoring Subsurface Nitrate-Nitrogen Losses from Soils. J. Environ. Qual. 3(2):183-185.

Todd, R.M. and W.D. Kemper. 1972. Salt Dispersion Coefficients Near an Evaporating Surface. Soil Sci. Soc. Am. Proc. 36:539-543.

Tsai, T.C., R.D. Morrison, and R.J. Stearns. 1980. Validity of Porous Cup Vacuum/Suction Lysimeter as a Sampling Tool for Vadose Waters. Unpublished report, Calscience Research, Inc., Huntington Beach, CA. (As cited in Everett et al., 1983.)

Tyler, G. 1981. Leaching of Metals from A Horizon of a Spruce Forest Soil. Water, Air, and Soil Pollution 15:353-369.

Tyler, D.D. and G.W. Thomas. 1977. Lysimeter Measurements of Nitrate and Chloride Losses with No-Tillage Corn. J. Environ. Qual. 6:63-66.

Upchurch, W.J., M.Y. Chowdhury, and C.E. Marshall. 1973. Lysimetric and Chemical Investigations of Pedological Changes, 1. Lysimeters and Their Drainage Waters. Soil Science 116:266-281.

U.S. Environmental Protection Agency (EPA). 1975. Use of the Water Balance Method for Predicting Leachate Generation from Solid Waste Disposal Sites. EPA/SW-168 (NTIS PB87-194643).

U.S. Environmental Protection Agency (EPA). 1986. Permit Guidance Manual on Unsaturated Zone Monitoring for Hazardous Waste Land Treatment Units. EPA/530/SW-86/040 (NTIS PB87-215463). (This report is sometimes cited as Everett and Wilson [1986].)

U.S. Soil Salinity Laboratory Staff. 1981. Minimizing Salt in Return Flow Through Irrigation Management. EPA/600/2-82/073 (NTIS PB82-257445), 160 pp. (1977 interim report with same title published as EPA/600/2-77/134 [NTIS PB272-637].) [Ceramic filter candle]

van der Ploeg, R.R. and F. Beese. 1977. Model Calculations for the Extraction of Soil Water by Ceramic Cups and Plates. Soil Sci. Soc. Am. J. 41:466-470.

van Hoorn, J. 1980. The Calibration of Four-Electrode Soil Conductivity Measurements for Determining Soil Salinity. In: Int. Symp. on Salt Affected Soils (Karnal, India), D. Bhumbla and J. Yadav (eds.), pp. 148-156.

van Schilfgaarde, J. 1977. Minimizing Salt in Return Flow by Improving Irrigation Efficiency. In: Proc. Nat. Conf. Irrigation Return Flow Quality Management, J. Law, Jr. and G Skogerboe (eds.), Colorado State University, Fort Collins, CO, EPA/600/9-77/040 (NTIS PB274-086), pp. 81-98.

Vroblesky, D.A. and M.M. Lorah. 1991. Prospecting for Zones of Contaminated Ground-Water Discharge to Streams Using Bottom-Sediment Gas Bubbles. Ground Water 29:333-340.

Vroblesky, D.A., J.F. Robertson, M. Fernandez, and C.M. Aelion. 1992. The Permeable-Membrane Method of Passive Soil-Gas Collection. Ground Water Management 11:3-16 (6th NOAC).

Wagemann, R. and B. Graham. 1974. Membrane and Glass Fiber Filter Contamination in Chemical Analysis of Fresh Water. Water Res. 8:407-412.

Wagenet, R.J. 1986. Water and Solute Flux. In: Methods of Soil Analysis, Part 1, 2nd edition, A. Klute (ed.), Agronomy Monograph No. 9, American Society of Agronomy, Madison, WI, pp. 1055-1088.

Wagner, G.H. 1962. Use of Porous Ceramic Cups to Sample Soil Water Within the Profile. Soil Science 94:379-386.

Wagner, G.H. 1965. Changes in Nitrate Nitrogen in Field Plot Profiles as Measured by the Porous Cup Technique. Soil Science 100:397-402.

Warrick, W.A. and A. Amoozegar-Fard. 1977. Soil Water Regimes Near Porous Cup Samplers. Water Resources Research 13:203-207.

Weeks, E.P. 1978. Field Determination of Vertical Permeability to Air in the Unsaturated Zone. U.S. Geological Survey Professional Paper 1051, 41 pp.

Weinig, W.T. 1992. Monitoring the Vadose Zone During Pneumatic Pumping Tests. Ground Water Management 11:133-146 (6th NOAC). [Air permeability]

Wellings, S.R. and J.P. Bell. 1980. Movement of Water and Nitrate in the Unsaturated Zone of Upper Chalk Near Winchester, Hants, England. J. Hydrology 48:119-136.

Wengel, R.W. and G.F. Griffin. 1971. Remote Soil-Water Sampling Technique. Soil Sci. Soc. Am. Proc. 35:661-664.

Wesseling, J. and J. Oster. 1973. Response of Salinity Sensors to Rapidly Changing Salinity. Soil Sci. Soc. Am. Proc. 37:553-557.

Whelan, B.R. and N.J. Barrow. 1980. A Study of A Method for Displacing Soil Solution by Centrifuging with an Immiscible Liquid. J. Environ. Qual. 9:315-320.

Whitney, M. and T. Means. 1897. An Electrical Method of Determining the Salt Content of Soils. U.S. Dept. of Agric., Bureau of Soils Bull. 8:1-30.

Wierenga, P.J. and T.C. Patterson. 1974. Quality of Irrigation Return Flow in the Meslla Valley. Trans. 10th Int. Congr. Soil Sci. 10:216-222.

Willardson, L.S., B.D. Meek, and M.J. Huber. 1973. A Flow Path Ground Water Sampling. Soil Sci. Soc. Am. Proc. 36:965-966.

Williams, B.G. and B.C. Baker. 1982. An Electromagnetic Induction Technique for Reconnaissance Surveys of Soil Salinity. Aust. J. Soil Res. 20:107-118.

Wilson, L.G. 1983. Monitoring in the Vadose Zone: Part III. Ground Water Monitoring Review 3(1):155-166.

Wilson, L.G. 1990. Methods for Sampling Fluids in the Vadose Zone. In: Ground Water and Vadose Zone Monitoring, D.M. Nielsen and A.I. Johnson (eds.), ASTM STP 1053, American Society for Testing and Materials, Philadelphia, PA, pp. 7-24.

Wilson, L.G. and K.D. Schmidt. 1978. Monitoring Perched Groundwater in the Vadose Zone. In: Establishment of Water Quality Monitoring Programs, L.G Everett and K.D. Schmidt (eds.), American Water Resources Association, St. Paul, MN, pp. 134-149.

Wilson, L.G. and G.G. Small. 1973. Pollution Potential of a Sanitary Landfill Near Tucson Arizona. In: Hydraulic Engineering and the Environment, Proc. 21st Annual Hydraulics Specialty Division Conference, ASCE, New York, NY. [Free drainage sampling]

Wolff, R.G. 1967. Weathering of Woodstock Granite Near Baltimore, Maryland. American Journal of Science 265:106-117.

Wollenhaupt, N.C., J.L. Richardson, J.E. Foss, and E.C. Doll. 1986. A Rapid Method for Estimating Weighted Soil Salinity from Apparent Soil Electrical Conductivity Measured with an Aboveground Electromagnetic Induction Meter. Can. J. Soil Sci. 66:315-321.

Wolt, J. and J.G. Graveel. 1986. Rapid Routine Method for Obtaining Soil Solution Using Vacuum Displacement. Soil Sci. Soc. Am. J. 50:602-605.

Wood, W.W. 1973. A Technique Using Porous Cups for Water Sampling at Any Depth in the Unsaturated Zone. Water Resources Research 9(2):468-488.

Wood, J.D. 1978a. Calibration Stability and Response Time for Salinity Sensors. Soil Sci. Soc. Am. J. 42:248-250.

Wood, W.W. 1978b. Use of Laboratory Data to Predict Sulfate Sorption During Artificial Ground-Water Recharge. Ground Water 16(1):22-31.

Wood, W.W. and D.C. Signor. 1975. Geochemical Factors Affecting Artificial Recharge in the Unsaturated Zone. Trans. Am. Soc. Agric. Eng. 18(4):677-683.

Wood, A.L., J.T. Wilson, R.L. Cosby, A.G. Hornsby, and L.B. Baskin. 1981. Apparatus and Procedure for Sampling Soil Profiles for Volatile Organic Compounds. Soil Sci. Soc. Am. J. 45:442-444.

Yadav, B.R., N.H. Rao, K.V. Paliwal, and P.B.S. Sarma. 1979. Comparison of Different Methods for Measuring Soil Salinity Under Field Conditions. Soil Science 127:335-339.

Yamasaki, A. and A. Kishita. 1972. Studies on Soil Solutions with Reference to Nutrient Availability. I. Effect of Various Potassium Fertilizers on Its Behavior in the Soil Solution. Soil Sci. Plant Nutr. 18:1-6.

Young, M. 1985. Use of Suction Lysimeters for Monitoring in the Landfill Liner Zone. In: Proc. of Monitoring Hazardous Waste Sites, Geotechnical Eng. Div. ASCE. [Vacuum-pressure porous cup]

Yu, Y., K. Chen, R. Morrison, and J. Mang. 1978. Physical and Chemical Characterization of Dredge Material Sediments and Leachates in Confined Land Disposal Areas. U.S. Army Corps of Engineers, Tech. Rept. D-78-43, 241 pp.

Zabowski, D. 1989. Limited Release of Soluble Organics from Roots During the Centrifugal Extraction of Soil Solution. Soil Sci. Soc. Am. J. 53:977-979.

Zabowski, D. and F.C. Ugolini. 1990. Lysimeter and Centrifuge Soil Solutions: Seasonal Differences Between Methods. Soil Sci. Soc. Am. J. 54:1130-1135.

Zimmermann, C.F., M.T. Price, and J.R. Montgomery. 1978. A Comparison of Ceramic and Teflon In Situ Samplers for Nutrient Pore Water Determinations. Estuarine Coastal Mar. Sci. 7:93-97.

SECTION 10

FIELD SCREENING AND ANALYTICAL METHODS

The term "field screening" has gained widespread use in recent years to describe a wide variety of methods for chemical characterization of contaminated sites. In this guide, a distinction is made between field screening and field analytical methods. **Field screening** methods provide an indication of the presence or absence of a particular chemical or chemical class of concern, or provide an indication of whether the chemical or chemical class of concern is above or below a predetermined threshold. Screening methods provide relative concentrations for chemical classes, but rarely provide chemical-specific information. This definition is more restrictive than those usually found in the literature. **Field analytical** methods include all chemical analysis methods capable of providing chemical-specific quantitative data in the field or non-laboratory setting. Field analytical techniques generally are more rapid and less expensive than similar chemical analyses performed in laboratories with fixed facilities. Field screening and analytical techniques can be classified as **portable** (require no external power source, are compact, and are rugged enough to be carried by hand into the field), **fieldable** (require limited external power, are compact, and are rugged enough to be transported in a small van, pick-up, or four-wheel drive), or **mobile** (are small enough to carry in a mobile laboratory, which is feasible for most analytical instruments although power considerations can be a limitation). The standard by which the sensitivity, precision, and accuracy of field screening techniques are measured are those obtained in fixed-base laboratories in EPA's **contract laboratory program** (CLP). An intermediate option for analysis of samples is the use of a **dedicated** laboratory using CLP procedures but involving more rapid turnaround time (as short as overnight) for sample results.

Field Analysis versus CLP Analytical Laboratory

Key advantages of field analytical techniques include: (1) Results can be obtained within hours, compared to the 20 to 40 days required for CLP laboratories, which allows for more rapid definition of the scope of contamination and allows for optimal selection of permanent monitoring wells/locations; (2) lower cost per sample (commonly one-tenth CLP cost) allows for more detailed characterization of contaminant distribution and/or reduced overall costs; and (3) the techniques are best suited for preliminary site characterization, emergency remedial actions, and monitoring of remediation activities. Some general disadvantages of field analytical techniques include: (1) Application of analytical QA/QC procedures is more difficult in the field; (2) generally, less sophisticated instrumentation and disadvantage #1 results in generally higher detection limits and lower precision and accuracy compared to CLP laboratories; and (3) disadvantages #1 and #2 mean that data are more liable to challenge by litigation.

Cost differences between field analysis and laboratory analysis are strongly dependent on the number of samples from a site that must be analyzed, with the cost advantage tending to shift to field analysis as the number of samples increases. For example, if less than 30 to 50 samples are required, laboratory gas chromatograph analyses are likely to be less expensive than using portable or mobile GCs. Similarly, around 50 to 80 samples for field X-ray fluorescence analysis of metals are required to save money over conventional laboratory XRF analyses.

Overview of Specific Techniques

Developments in miniaturization and computer processing of analytical signals and development of innovative analytical techniques mean that almost any instrumental or analytical technique has the potential for being used for field screening. Any attempt to publish a comprehensive compilation of techniques that have been proposed or tested is doomed to be out-of-date before it reaches print. This section, therefore, provides a reasonably comprehensive overview of the state-of-the-art as of early 1993. Table 10-1 provides summary information on over 80 techniques. Techniques are grouped into the following major categories: (1) Routine chemical field measurement techniques (Section 10.1 [chemical sensors covered in Chapter 5 also are indexed under this section in the table]); (2) major sample extraction procedures (Section 10.2); (3) analytical techniques that detect gases or require creation of a gaseous phase during the analytical process if the gaseous phase is not already present (Section 10.3); (4) luminescence, spectrophotometric, and other spectroscopic techniques (Section

Table 10-1 Summary Information on Sample Processing/Analytical Techniques

Technique/Instrumentation	Technology Status[a]	Sample Matrix[b]	Contaminant Type[c]	Detection Limit[d]	Section/Table
Chemical Field Measurement Techniques/Sensors					
ph/Alkalinity/Acidity	I/CP	W,S	--	--	10.1.1, 5.5.4
Eh	I/CP	W,S	--	--	10.1.2, 5.5.4
Dissolved Oxygen	I/CP	W	--	ppm	10.1.2, 5.5.4
Temperature	I/CP	W	--	--	10.1.3
Electrical Conductance	I/CP	W,S	--	--	10.1.3
Filterable Residue	I/CM	W	--	--	10.1.3
Other Specific Ion Electrodes	II/CP	W	EA	ppm	5.5.5
Solid/Porous Fiber Optic	IV	W,S,A	VOC	ppm	5.5.6
Immunochemical Fiber Optic	IV	W,S,A	SVO	ppb-ppm	5.5.6, 10.5.2
Electrochemical Sensors	IV	W,A	VOC,TG	pbb-ppm	10.6.5
SAW Probes	IV	A	VOC,TG	ppm	10.6.5
Piezoelectric Sensors	IV	A	VOC	ppm	10.6.5
Semiconductor Sensors	IV	A,W	VOC	ppm-%	10.6.5
Sample Extraction Procedures					
Headspace Analysis	I	A	VOC	--	10.2.1
Vacuum Extraction	I/CP	A	VOC	--	10.2.1
Purge and Trap	I/CP	W	VOC	--	10.2.2
Solvent Extraction	I/CP	S	SVO,VOC	--	10.2.3
Thermal Digestion	II/CP	W,S	EA,HM	--	10.2.4
Thermal Extraction	II/CP	W,S	SVO	--	10.2.4
Thermal Desorption	III/CP	W,S	VOC,SVO	--	10.2.4
Supercritical Fluid Extract.	III/CP	W,S	VOC,SVO	--	10.2.5
Membrane Extraction	IV	W	VOC	--	10.2.5
Sorbent Extraction	I/CP	A,W	VOC,SVO	--	10.2.5
Gaseous Phase Analytical Techniques					
Photo-Ionization Detector	I/CP	A	VOC	ppb-ppm	10.3.1
Flame-Ionization Detector	I/CP	A	VOC	ppb-ppm	10.3.1
Argon-Ionization Detector	III/CP	A	VOC	100s ppb-ppm	10.3.1
Explosimeter	I/CP	A	VOC	%	10.3.2
Catalytic Surface Oxidation	I/CP	A	VOC,TG	ppm-%	10.3.2
Detector Tubes	I/CP	A	VOC,TG	high ppm	10.3.2
Gas Chromatography (GC)	II/CP,CM	A,W	VOC,SVO,TR	ppb-ppm	10.3.3/Table 10-3
Mass Spectrometry (MS)	II/CF,CM	A	VOC,SVO,TR	ppm	10.3.4/Table 10-3
GC/MS	II/CM	A	VOC,SVO,TR	ppb	10.3.4/Table 10-3
Ion Trap MS	IV	A	VOC,SVO	ppb-ppm	10.3.4
AA Spectrometry	II/CM	A,W	EA,HM	ppb-ppm	10.3.5/Table 10-3
ICP-AES	II	A,W	EA,HM	ppb-ppm	10.3.6/Table 10-3
Ion Mobility Spectrometer	II/CP	A	VOC,SVO,TG	ppt-ppm	10.3.7
Luminescence/Spectroscopic Techniques					
X-Ray Fluorescence	II/CP,CM	S,W	HM	10s-100s ppm	10.4.1
UV Fluorescence	II	S,W	VOC	sub ppm	10.4.2/Tables 10-3, 10.4.2
Room-Temp. Phosphorimetry	III	S,W	VOC,SVO	ppb-ppm	10.4.2/Table 10.4.2
Synchronous Luminescence	III	W	VOC,SVO	ppm	10.4.2
Synchronous Fluorescence	III	W	VOC,SVO	ppm	10.4.2/Table 10.4.2
UV-Visible Spectrophotometry	III	A,W	VOC	ppb-ppm	10.4.3/Tables 10-3, 10.4.3
Infrared Spectroscopy	II	A,W,S	M,VOC,SVO	ppm-1000s ppm	10.4.3/Tables 10-3, 10.4.3

Table 10-1 (cont.)

Technique/Instrumentation	Technology Status[a]	Sample Matrix[b]	Contaminant Type[c]	Detection Limit[d]	Section/Table
Luminescence/Spectroscopic Techniques (cont.)					
FTIR Spectroscopy	II/CP,CM	A	VOC	ppb-%	10.4.4/Table 10.4.4
Scattering/Absorption Lidar	IV	A	VOC	ppm	10.4.4
Raman Spectroscopy/SERS	II	W,S	VOC,SVO	ppb-ppm	10.4.4/Table 10.4.4
Near IR Reflectance/Trans. Spect.	IV	S	VOC	100s-1000s ppm	10.4.4/Table 10.4.4
Wet Chemistry					
Chemical Colorimetric Kits	II/CP	W	EA,HM,SVO	ppb-100s ppm	10.5.1/Table 10-3
Other Colorimetric Methods	I/CP	W	TR	ppb-100s ppm	10.5.1/Table 10-3
Titrimetry	I/CP	W	EA,HM,TR	ppb-100s ppm	10.5.1
Immunoassay Colorimetric Kits	II/CP	W	SVO	ppb-ppm	10.5.2
Ion Chromatography	II	W	EA	ppm-100s ppm	10.5.3/Table 10-3
High-Pressure Liquid Chromatography	II/CM	W	SVO,TR	ppb-ppm	10.5.3/Table 10-3
Thin-Layer Chromatography	II	W	SVO	ppm	10.5.3
Coulometry	II	W	EA,TR	ppb-ppm	10.5.4
Polarography	II	W	EA	sub-100s ppm	10.5.4
Stripping Voltammetry	II	W	EA	ppt-ppm	10.5.4
Radiological					
Neutron Activation/INNA	II	S,W	EA,TR	10s ppm	10.6.1, 3.3.5, 3.3.6
PIXE	II	S,W	EA,HM	10s-100s ppm	10.6.1/Table 10-3
Radiation Detectors	I/CP	A,S,W	R,TR	varies	10.6.1, 3.3.1
X-Ray Diffraction	II	S	M	--	10.6.1
Gamma Spectrometry	I/CP	S	M	--	3.3.2
Other					
Gravimetric	I/CP	W,S	P,TDS	%	10.6.2
Volumetric	I/CP	S,W,A	P	--	10.6.2
Nuclear Magnetic Resonance	I/CP	S,W	M,P	--	10.6.3, 3.2.4
Magnetic Susceptibility	II	S	M	--	10.6.3
Electron Spin Resonance	II	S,W,A	M	--	10.6.3
Optical Microscope	II/CP	S	M,P	--	10.6.4
Scanning Electron Microscope	II	S	M	--	10.6.4
Electron Microprobe	II	S	M	high ppm	10.6.4
Field Bioassessment	II	--	VOC,HM	--	10.6.6
Toxicity Tests	II	W,S,A	VOC,SVO,HM	--	10.6.6
Biomarkers	III	W,S,A	VOC,SVO,HM	--	10.6.6

Boldface = Most commonly used/proven field techniques.

[a]I = Well established and routinely used field technology; II = Well established laboratory technology for which experience in field applications is moderate to limited; III = Relatively well established technology for which there is limited field experience; IV = Developing technology with potentially useful field applications. CP = Commercially available portable instruments; CF = Commercially available fieldable instruments; CM = Commercial/custom mobile laboratories available.
[b]A = Air/gaseous matrix; S = Soil/solid matrix; W = Water/aqueous/liquid matrix. Volatile and semivolatiles in water and solid samples can be extracted for analysis by gaseous phase analytical techniques. Similarly, analytes can be extracted from solids samples for analysis using wet chemistry techniques.
[c]EA = Elemental/ionic analysis; HM = Metals; M = Mineralogy; P = Physical characterization; R = Radioisotopes; SVO = Semivolatile organics; TG = Toxic gases; TDS = Total dissolved solids; TR = Tracer studies; VOC = Volatile organic compounds.
[d]Ranges for specific instruments and analytes might differ from range shown by orders of magnitude. In general, detection limits for soils will be higher than for ground water.

10.4); (5) wet chemistry techniques (Section 10.5), and (6) radiological and other miscellaneous techniques (Section 10.6).

Some Basic Analytical Concepts

For the nonchemist, terminology used to describe analytical techniques can be bewildering. A further source of potential confusion is that techniques can be used for different purposes in numerous combinations and configurations. For example, a flame ionization detector (FID) can be used by itself as a total vapor detector, or it can be used to detect specific compounds after they have been separated by a gas chromatograph (GC/FID). A gas chromatograph, on the other hand, can be used alone with a FID or other type of detector, or in combination with a mass spectrometer (GC/MS). An understanding of the basic principles of operation of major individual techniques makes it possible to have some idea of how an unfamiliar combination of techniques functions.

A further source of possible confusion is that the different terms can be applied to the same technique. For example, the terms fluorometry, fluorimetry, and spectrofluorometry can be used interchangeably. Furthermore, some terms can be applied to the same technique, but are not necessarily interchangeable. For example the term luminescence can be applied to any technique involving fluorescence, but the term fluorescence is not applicable to all luminescence techniques (which include phosphorescence). The following discussion might be helpful in developing an understanding of some of the basic principles involved in chemical analysis and in sorting out the relationship between similar techniques. It might also be helpful to think of techniques in terms of the major types of analytical signals as summarized in Table 10-2.

Chromatography refers to processes in which individual components of a mixture migrate through a stationary medium at different rates. In analytical chemistry, chromatography refers to a diverse group of separation methods such as **gas chromatography** (Section 10.3.3) and **liquid chromatography** (Section 10.5.3) used to separate, isolate, and identify components of mixtures that might otherwise be resolved with great difficulty.

A **spectrum** is the distribution of the phases of a radiated wave cycle or of the intensity of radiation when some property (frequency, mass, or energy) is allowed to vary. **Spectroscopy** encompasses a wide range of techniques involving optical instruments used to form and analyze spectra. **Spectrometry** is a spectroscopic technique in which the instrument measures: (1) The deviation of the refracted rays, and (2) wave lengths and angles between two faces of a prism. **Spectrophotometry** involves making comparisons of color intensity between corresponding parts of different spectra, or between parts of the same spectrum. **Photometry** involves the measurement of the intensity of light or the relative intensity of different lights. **Luminescence** involves the emission of light at temperatures below that of incandescent bodies and includes **fluorescence** (emission of radiation as a result of absorption of other radiation) and **phosphorescence** (light given off from slow oxidation of phosphorus).

Table 10-3 provides information on commercial sources for four major classes of analytical instruments: (1) Spectrophotometric instrumentation (atomic absorption, UV/visible, fluorescence, and infrared); (2) chromatographs (gas, ion, and liquid); (3) spectrometers (GC/MS, MS, optical emission, plasma emission, and x-ray); and (4) colorimeters.

Sources of Additional Information

SW-846 (U.S. EPA, 1986b) is the standard reference for solid waste test methods. A field screening methods catalog (U.S. EPA, 1988a) provides information on 26 field screening methods for which protocols have been developed and is available as an expert system for use on a microcomputer. This catalog is in the process of being updated and expanded into a format comparable to SW-846. Table 10-4, at the end of this section, provides an index of references providing overviews of field-screening techniques and more detailed references on sample extraction procedures. Table 10-5, also at the end of this section, provides a fairly detailed index of more than 300 references on specific field screening and other analytical techniques contained in this section.

Table 10-2 Major Analytical Signals and Methods

Signal	Analytical Methods Based on Measurement of Signal
Emission of radiation	Emission spectroscopy (X-ray, UV, visible, electron Auger); fluorescence and phosphorescence spectroscopy (X-ray, UV, visible); radiochemistry
Absorption of radiation	**Colorimetry** (visible), **UV-visible/X-ray/IR spectrophotometry**; photoacoustic spectroscopy; **nuclear magnetic resonance** and electron spin resonance spectroscopy
Scattering of radiation	Turbidimetry; nephelometry; **Raman spectroscopy**
Refraction of radiation	Refractometry; interferometry; X-ray diffraction
Rotation of radiation	Polarimetry; optical rotatory dispersion; circular dichroism
Electrical potential	**Potentiometry**; chronopotentiometry
Electrical current	Polarography; amperometry; **coulometry**; voltammetry
Mass-to-charge ratio	**Mass spectrometry**
Rate of reaction	Kinetic methods
Thermal properties	Thermal conductivity and enthalpy methods
Mass	**Gravimetric analysis**
Volume	**Volumetric analysis**

Boldface = Most commonly used in field screening applications.

Source: Modified from Skoog (1985)

Table 10-3 Commercial Sources for Spectrophotometric Instruments, Chromatographs, Spectrometers, and Colorimeters

MANUFACTURER	SPECTROPHOTOMETRIC INSTRUMENTATION	CHROMATOGRAPHS	SPECTROMETERS	COLORIMETERS
ACE GLASS 800/223-4524		LI		
AIR INSTRUMENTS & MEASUREMENTS 818/813-1466, 800/969-4246	IR,UV		OE	
ALLTECH ASSOCIATES 708/948-8600, 800/255-8324	UV	IO,LI	GC	
AMERICAN GAUGE 404/932-0550	IR			
AMERICAN ULTRAVIOLET 908/665-2211	UV			
AMETEK, PROCESS & ANALYTICAL DIV. 302/456-4400, 800/222-6789	AA,UV,IR		MS	CO
ANADATA 312/465-2688		GA		
ANALYTE 503/779-0334	AA			
ANARAD 805/963-6583	FL,IR,UV		XR	CO
ASOMA INSTRUMENTS 512/258-6608			XR	
ASTRO INTERNATIONAL 713/332-2484	IR			
BAIRD 617/276-6000			SM	
BALZERS HIGH VACUUM PRODS 603/889-6888			MS	
BASELINE INDUSTRIES 303/823-6661, 800/321-4665		GA		
BOMEM INTERNATIONAL 708/350-0550, 800/888-3847	SI		SM	
BRAINARD KILMAN DRILL CO. 404/469-2720, 800/241-9468		GA		
BUCK SCIENTIFIC 203/853-9444, 800/562-5566	IR,UV,AA	GA		
C E A INSTRUMENTS 201/967-5660			SM	CO
CHEMPLEX INDUSTRIES 914/337-4200			XR	
CHROMATOCHEM 406/728-5897, 800/426-7227		LI		
COLLOID ENVIRONMENTAL TECHNOLOGIES 708/392-5800			XR	
COLUMBIA SCIENTIFIC 800/531-5003	FL,UV			
DASIBI ENVIRONMENTAL 818/247-7601	IR,UV,FL			
DIONEX 408/737-0700, 800/346-6390		LI,IO		
DYNAMATION 313/769-0573				CO
E M SCIENCE 609/354-9200, 800/222-0342		CH		
E S INDUSTRIES 609/983-3616, 800/356-6140		GA		
FISONS INSTRUMENTS 508/524-1000		GA,LI	GC,OE,PE,XR,MS	
FOXBORO 800/521-0451	IR	GA		
FOXBORO E M O 508/378-5556	IR	GA,LI		
GENERAL ANALYSIS 203/852-8999, 800/327-2460	IR			
GOW MAC INSTRUMENTS 908/560-0600		GA,LI		
H F SCIENTIFIC 813/337-2116				CO
H N U SYSTEMS 617/964-6690, 800/724-5600		GA	XR	
HACH 303/669-3050, 800/227-4224	SI			CO
HAMILTON 702/786-7077, 800/648-5950		GA		
HEATH CONSULTANTS 713/947-9292, 800/432-8487		GA		
HORIBA INSTRUMENTS 714/250-4811, 800/446-7422	IR,UV		XR	
HOUSTON ATLAS 713/348-1700		GA		
I C M 503/648-2014, 800/262-3668				CO
IR ANALYTICAL 415/595-8200, 800/437-9701	AA,FL,IR,UV	GA,LI,IO	GC	
INSTRUMENTS SA 908/494-8660, 800/438-7739	FL		OE	
INTERNATIONAL LIGHT 508/465-5923	IR,UV			
IONICS, INSTRUMENT DIV. 617/926-2500	SI			
ISCO, INSTRUMENT DIV. 402/464-0231, 800/228-4250		LI		
L T INDUSTRIES 301/468-6777	IR,SI			
LA JOLLA SCIENTIFIC 619/549-2818	UV			
LAMOTTE 301/778-3100, 800/344-3100				CO
LEAP TECHNOLOGIES 919/929-8814, 800/229-8814		GA		
LEEMAN LABS 508/454-4442			SM	
M S A, INSTRUMENT DIV. 412/672-4678	IR,UV	GA	MS	
M T I ANALYTICAL INSTRUMENTS 510/490-0900		GA		

Table 10-3 (cont.)

MANUFACTURER	SPECTROPHOTOMETRIC INSTRUMENTATION	CHROMATOGRAPHS	SPECTROMETERS	COLORIMETERS
MCNEILL INTERNATIONAL 800/626-3455			SM	
MCPHERSON INSTRUMENTS 508/263-7733, 800/255-1055	UV,FL			
METROSONICS 716/334-7300	IR			
MIDAC 714/645-4096	IR			
MILTON ROY, ANALYTICAL PRODUCTS 716/248-4000, 800/654-9955	SI,UV			CO
MILTON ROY, PROCESS & ENVIRONMENTAL INSTRUMENTS 714/974-5560	IR			
MONITEK TECHNOLOGIES 510/471-8300	UV			CO
NATIONAL DRAEGER 412/787-2207	IR			
O I ANALYTICAL 409/690-1711		GA		
PERKIN ELMER 203/762-1000, 800/762-4000	IR,UV,AA,FL	GA,LI	GC,PE,MS	
PHOTOVAC INTERNATIONAL 516/254-4199		GA		
PROCESS ANALYZERS 215/736-2596		CH		
QUANTUM ANALYTICS 415/570-5656, 800/992-4199	AA,FL,IR,UV	GA,LI,IO	GC,NM,OE,PE,MS	
RESPONSE RENTALS 716/266-3910, 800/242-3910	IR	GA		
S R I INSTRUMENTS 213/214-5090		GA		
SENSIDYNE 813/530-3602, 800/451-9444		GA	SM	CO
SENTEX SYSTEMS 201/945-3694		GA		
SERVOMEX 617/769-7710, 800/862-0200	IR			
SIEMENS ENERGY AND AUTOMATION 404/740-3931	IR	GA		
SIERRA MONITOR 408/262-9042	IR		SM	
SHIMADZU SCIENTIFIC 410/381-1227, 800/477-1227	IR,UV,AA,FL	GA,LI,IO	GC,OE	CO
SIEVERS RESEARCH 303/444-2009		GA		
SPECTRA HARDWARE 412/863-7527			PE	
SPECTRA PHYSICS ANALYTICAL 408/432-3333, 800/424-7666		LI		
SPECTRACE INSTRUMENTS 415/967-6316			XR	
SPECTREX 415/365-6567			OE	
SPECTRO ANALYTICAL INSTRUMENTS 508/342-3400, 800/548-5809	AA			
SUPREX 412/826-5200		CH		
T N TECHNOLOGIES/MANNING PRODUCTS 512/388-9100, 800/736-0801			XR	
TEXMAR 513/247-7000, 800/543-4461		GA		
TELEDYNE ANALYTICAL 818/961-9221	IR,UV			CO
THERMO JARRELL ASH 508/520-1880	AA		OE,PE	
TIMBERLINE INSTRUMENTS 303/494-4104		CH		
TREMETRICS 512/251-1555, 800/876-6711		GA	GC	
TURNER DESIGNS 408/749-0994	FL			
TYTRONICS 617/894-0550	SI			
U V P 818/285-3123, 800/452-6788	UV			
UNOCAL UNIPURE 714/525-9225, 800/323-8647		CH		
VALCO INSTRUMENTS 713/688-9345, 800/367-8424		CH		
VARIAN ANALYTICAL INSTRUMENTS 415/945-2173, 800/926-3000	AA,FL,UV	GA,LI	GC	
VESTEC 713/796-9677		CH		
VIKING INSTRUMENT CORP. 703/758-9339			GC	
WHATMAN 201/773-5800, 800/922-0361		LI		
WYATT TECHNOLOGY 805/963-5904		LI		

KEY

AA ATOMIC ABSORPTION SPECTROPHOTOMETERS
CH CHROMATOGRAPHS PRODUCED
CO COLORIMETERS PRODUCED
FL FLUORESCENCE SPECTROPHOTOMETERS
GA GAS
GC GC/MS
IO ION
IR INFRARED SPECTROPHOTOMETERS
LI LIQUID
MS MASS SPECTROMETERS
NM NMR SPECTROMETERS
OE OPTICAL EMISSION SPECTROMETERS
PE PLASMA EMISSION SPECTROMETERS
SI SPECTROPHOTOMETRIC INSTRUMENTATION PRODUCED
SM SPECTROMETERS PRODUCED
UV UV/VIS SPECTROPHOTOMETERS
XR X-RAY SPECTROMETERS

Source: Pollution Equipment News (February, 1993)

10. CHEMICAL FIELD SCREENING AND ANALYTICAL METHODS

10.1 FIELD MEASURED GENERAL CHEMICAL PARAMETERS

10.1.1 pH/Alkalinity/Acidity

Other Names Used to Describe Method: --

Uses at Contaminated Sites: pH is used as an indicator during purging before ground-water sampling (see Section C.1) and is a fundamental parameter for chemical characterization of ground water and soils. In addition pH is used to classify corrosivity of wastes (a pH of less than or equal to 2 and greater than or equal to 12.5 is considered hazardous). Alkalinity and acidity are indicators of the buffer capacity of a solution (the resistance to change in pH with the addition of a strong acid or base). Alkalinity is required for chemical equilibrium calculations related to carbonate minerals.

Method Description: The **pH** is the negative logarithm of the hydrogen ion activity in aqueous solutions and is a significant water quality parameter because it affects solute concentrations perhaps more than any other single variable. **Electrometric** measurement of pH involves comparison of a glass hydrogen ion electrode in the solution of interest against a reference electrode of known potential by means of a pH meter or other potential measuring device. Measurement of pH in soil and solids by this technique requires preparation of a saturation extract. **Colorimetric** measurement involves use of reagents or litmus paper and estimation of pH by comparison of the resulting color with color charts. Flow-through cells (see Figure 10.1.2) provide the most accurate measurement of pH because it can be altered when samples are exposed to the atmosphere. The pH electrode and buffer solutions must be about the same temperature as the sample. This can be accomplished by allowing sample water to run over them or by using a portable water bath. **Alkalinity** and **acidity** are measured titrimetrically from the initial condition by the addition of a strong base or acid to an inflection point on the titration curve or to a fixed endpoint (titrimetry is discussed further in Section 10.5.1). In ground water, alkalinity is measured as carbonate and bicarbonate.

Method Selection Considerations: Electrometric measurement of pH using pH electrodes and a pH meter is the recommended technique for accurate measurement of both ground water and soil. Colorimetric techniques, which are less precise but somewhat easier to use in the field, are satisfactory for general characterization of soils. Field measurement of alkalinity (as carbonate and bicarbonate) is required for chemical equilibrium calculations related to carbonate minerals because this parameter is subject to change during sample handling. The acidity obtained from titration analysis gives a measure to total ionizable hydrogen that can be used as input to some geochemical computer programs.

Frequency of Use: Field measurement of the pH of ground water should be a standard procedure during sampling. Field measurement of the pH of soil samples often is required for accurate classification of soils and is a useful characterization technique, but is not necessarily required for soil samples collected for laboratory analysis unless redox sensitive species are of special concern.

Standard Methods/Guidelines: See Table 10.1.1.

Sources for Additional Information: Barnes (1964), Garvis and Stuermer (1980), Hem (1985-interpretation), Korte and Ealey (1983), Ritchey (1986), Thompson et al. (1989-Chapter 15).

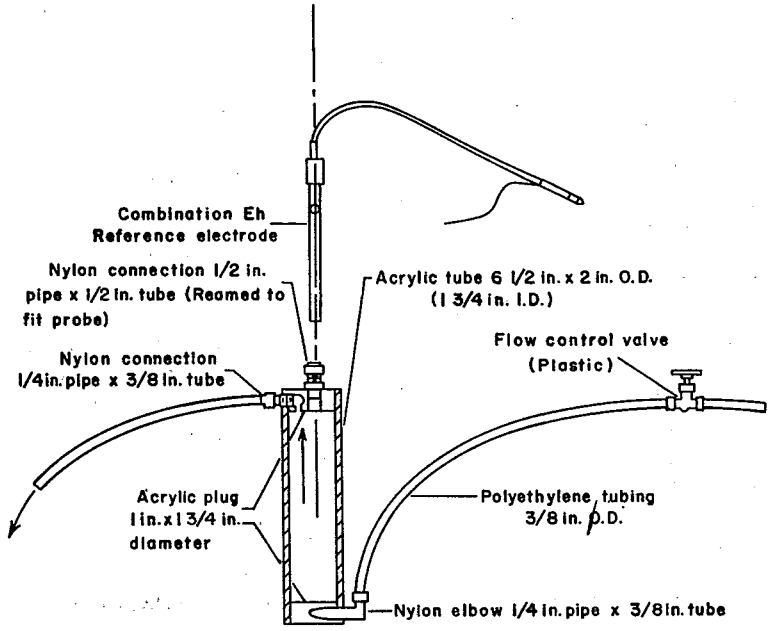

(a)

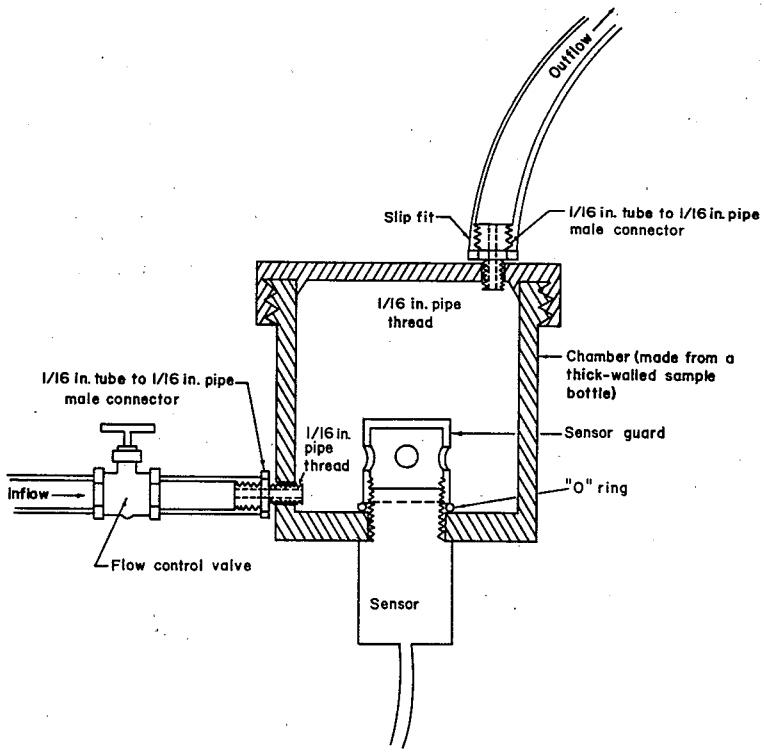

(b)

Figure 10.1.2 Oxidation-reduction status: (a) Eh measuring cell; (b) Flow chamber for determination of dissolved oxygen from a pumped well (Wood, 1976).

Table 10.1.1 Summary of Ground-Water and Soil Measurements to Be Made in the Field

Property/Section	Filtration	Sample Collection	Method Description	Reference
Wellhead Ground-Water Measurements				
Temperature (10.1.3)	No	Dewar flask or flow through	Thermometer	USGS (1980); EPA Method 170.1 (Kopp and McKee, 1983)
pH (10.1.1)	No	Flow through	pH electrodes and meter	USGS (1980); Wood (1976)
Carbonate/Bicarbonate (Alkalinity)(10.1.1)	Membrane	Closed titration vessel	Potentiometric (pH electrode) titration with strong acid	USGS (1980); Wood (1976); D1067-82 (ASTM, 1982)
Acidity (10.1.1)	Membrane	Closed titration vessel	Potentiometric (pH electrode) titration with strong base	D1067-82 (ASTM, 1982)
Eh (Redox Potential) (10.1.2)	No	Flow through	Potentiometric (Pt electrode)	D1498-76 (ASTM, 1976); Wood (1976)
Dissolved Oxygen (10.1.2)	No	Flow through	Potentiometric with oxygen probe or titrimetric	EPA Method 360.1/.2 (Kopp and McKee, 1983); USGS(1980); Wood(1976)
Specific Conductance (10.1.3)	Membrane	Flow through	Wheatstone Bridge conductivity meter	USGS (1980); Wood (1976)
Field Laboratory Ground-Water Measurements				
Filterable Residue (10.1.3)	No	Collect in bottle	Gravimetric	EPA Method 160.1 (Kopp and McKee, 1983)
Nitrate-Nitrite (Separately)(10.1.3)	Membrane	Collect in bottle	Spectrophotometric	EPA Method 353.3 (Kopp and McKee, 1983)
Sulfite (10.1.3)	Membrane	Collect in buffered iodine	Iodine-thiosulfate titration	Method M2 (Radian, 1988)
Soil/Solids				
Soil pH (10.1.1)	--	Grab or core	pH electrodes and meter in saturated paste	Method 8C (SCS, 1984) D4972-89 (ASTM, 1989)
Solid waste pH (10.1.1)	--	Grab or core		EPA Method 9045A* (U.S. EPA, 1986b)
Soil Conductivity/ Resistivity (10.1.3)	--	Grab or core	Wheatstone Bridge conductivity meter	Method 8E (SCS, 1984)

*Revision 1 of this method is dated November, 1990.

Source: Compiled from Boulding (1991) and Thompson et al. (1989)

10. CHEMICAL FIELD SCREENING AND ANALYTICAL METHODS

10.1 FIELD MEASURED GENERAL CHEMICAL PARAMETERS

10.1.2 Redox Potential (Eh)/Dissolved Oxygen

Other Names Used to Describe Method: --

Uses at Contaminated Sites: Characterizing oxidation-reduction conditions in the subsurface for evaluation of potential for mobility of heavy metals and biodegradation of organic contaminants.

Method Description: **Redox potential** (Eh) is measured electrometrically using a platinum electrode and a reference electrode to provide a reference potential and to provide an electrical connection to the solutions. Measurement of pH and temperature also are required. Eh readings can be strongly affected by exposure to atmospheric oxygen, consequently, flow-through cells must be used (Figure 10.1.2a). It is sometimes difficult to obtain precise readings of Eh because redox couples might not be in mutual equilibrium. More accurate characterization of the redox status of a sample requires analysis of the valence state of redox sensitive species (ferrous/ferric iron, nitrate/nitrite, and sulfate/hydrogen sulfide being most important in natural systems), which involves more complex chemical analytical procedures. Redox status of ground water and soil strongly affect the mobility and toxicity of arsenic, chromium, and selenium. Accurate chemical analysis of valence state is required to confirm Eh measurements. Arsenic and selenium forms usually are measured using hydride AAS (see Section 10.3.5), and chromium species can be determined colorimetrically (Hach kits for total and hexavalent chromium recently have been developed in cooperation with EPA). **Dissolved oxygen** (DO) is another indicator of the oxidation-reduction state of an aqueous solution, with low concentrations indicating reducing conditions. In the field, DO is measured electrometrically using a membrane electrode, a reference electrode, and a meter to measure electrode response. As with Eh, flow-through cells are used to prevent alteration of the sample by contact with the atmosphere (Figure 10.1.2b). Dissolved oxygen also can be measured titrimetrically using the Modified Winkler method.

Method Selection Considerations: Along with pH, redox potential and dissolved oxygen are the most significant parameters affecting the chemistry of ground water.

Frequency of Use: Eh and dissolved oxygen in ground-water samples are not measured as routinely as pH, but probably should be.

Standard Methods/Guidelines: See Table 10.1.1.

Sources for Additional Information: Garvis and Stuermer (1980), Hem (1985-interpretation), Holm et al. (1986), Korte and Ealey (1983), Langmuir (1971), Newman and Kimball (1991-DO), Ritchey (1986), Rose and Long (1988-DO), Thompson et al. (1989-Chapter 17).

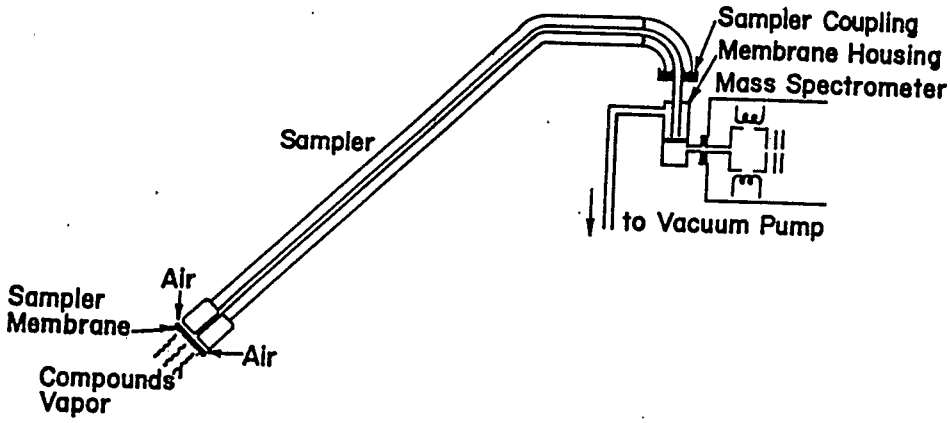

(a)

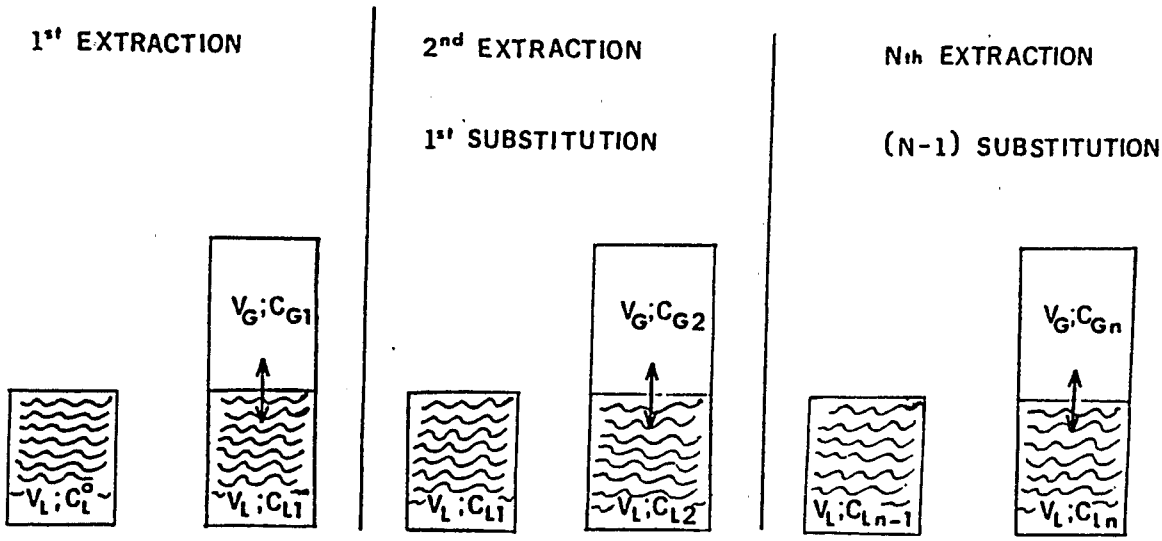

(b)

Figure 10.2.1 Field gas extraction techniques: (a) Vacuum extraction (Hadka and Dickinson, 1988); (b) Diagram of multiple headspace extraction (Ho et al., 1988).

10. CHEMICAL FIELD SCREENING AND ANALYTICAL METHODS

10.1 FIELD MEASURED GENERAL CHEMICAL PARAMETERS

10.1.3 Other Parameters

Other Names Used to Describe Method: Specific conductance/electrical conductivity, temperature, suspended solids (filterable residue), sensitive chemical species (nitrate/nitrite and sulfite).

Uses at Contaminated Sites: **Specific conductance:** Monitoring of well purge water; performing qualitative assessment of water quality; estimating total dissolved solids; detecting conductance contaminant plumes; performing ionic tracer tests. **Temperature:** Monitoring of well purge water; correcting for pH and Eh measurements; performing temperature tracer tests; monitoring air temperature. **Sensitive chemical species:** Performing field measurement for evaluation of water quality. **Filterable residue:** Characterizing subsurface transport of heavy metals on particles.

Method Description: Temperature measurement techniques are discussed in some detail in other sections of the guide (Sections 1.6.1, 1.6.2, 3.5.2, 8.2.1, and 8.2.3). Temperature of ground water usually is measured with a mercury-filled thermometer, which is placed in a sample that is continuously pumped into a dewar flask. Pumping continues until three identical consecutive readings of temperature are obtained. **Specific conductance** is measured using a Wheatstone bridge conductivity meter. During well purging, measurement of specific conductance at intervals until there is no significant change between measurements serves as an indication that stagnant water has been completely removed from the well and water quality samples can be collected. Specific conductance typically shows a linear correlation with total dissolved solids, and consequently can be used instead of separate measurement of TDS, provided a correlation curve for the specific area of interest has been developed. **Filterable residues** are measured gravimetrically after filtering. **Sensitive chemical species:** The U.S. Geological Survey (1980) recommends that certain sensitive chemical species be analyzed in the field because of potential for alteration with holding times required for laboratory analysis. Sulfite can be analyzed using an iodine-thiosulfate titration, and nitrate/nitrite forms of nitrogen can be analyzed colorimetrically.

Method Selection Considerations: Temperature measurement of ground-water samples is simple, inexpensive, and a necessary complement to pH and Eh measurements. Specific conductance of ground-water samples is simple and inexpensive and is useful for monitoring purge water and estimating total dissolved solids (TDS). A well-designed and constructed monitoring well should produce samples with a minimum of filterable residue, but if significant amounts are present, this measurements should probably be taken, especially if subsurface particle transport of heavy metals is a possibility. Analysis of sensitive species should be performed when they are considered of geochemical significance at the site.

Frequency of Use: Temperature and specific conductance of ground-water samples are standard measurements. Use of specific conductance to estimate total dissolved solids is more commonly used for surface waters, but can be useful for monitoring of contaminant plumes. Filterable residue and analysis of sensitive species are performed less commonly.

Standard Methods/Guidelines: See Table 10.1.1.

Sources for Additional Information: Davis et al. (1985), Hem (1985-interpretation), Korte and Ealey (1983), Thompson et al. (1989).

10.2 CONTAMINANT SAMPLE EXTRACTION PROCEDURES

10.2.1 Gas Headspace/Vacuum Extraction

Other Names Used to Describe Method: --

Uses at Contaminated Sites: Collecting volatile organic compounds in soil gas, soils, and ground water for chemical analysis.

Method Description: **Vacuum extraction** of pore gases involves the use of a vacuum pump to pull samples of air or soil gas directly into an analytical instrument. Figure 10.2.1a illustrates a vacuum sample probe used to obtain soil-gas samples for analysis by a mass spectrometer (see also, Figure 10.3.3b). Alternatively, a syringe can be used to sample the stream of gas that is created by the vacuum pump (see Figure 9.4.2a). **Gas headspace** extraction involves the use of a dead space to collect gases that are moving through water or soil, or from a solid or liquid phase to a gaseous phase. This can involve placement of a water or soil sample in a container that is partly filled with air (headspace), and collecting a sample of the headspace gas (usually with a syringe) once the vapors in the sample have equilibrated with the headspace gas. Since not all vapors are likely to degas the first time, **multiple headspace extraction** is sometimes used (Figure 10.2.1b). Figure 9.4.2c illustrates a field headspace collection device for sampling gases moving through a surface water body.

Method Selection Considerations: **Advantages:** Is an extremely simple procedure. **Disadvantages:** Might not result in full extraction of volatiles in ground-water and soil.

Frequency of Use: Vacuum extraction of pore gases and headspace techniques are commonly used for extraction of volatile organic compounds for analysis.

Standard Methods/Guidelines: **Headspace techniques:** Ford et al. (1984), U.S. EPA (1988b-FM-4 to FM-9, FM-11); **Vacuum extraction:** U.S. EPA (1988b-FM-12 to FM-14, FM-16, FM-17).

Sources for Additional Information: See Table 10-4.

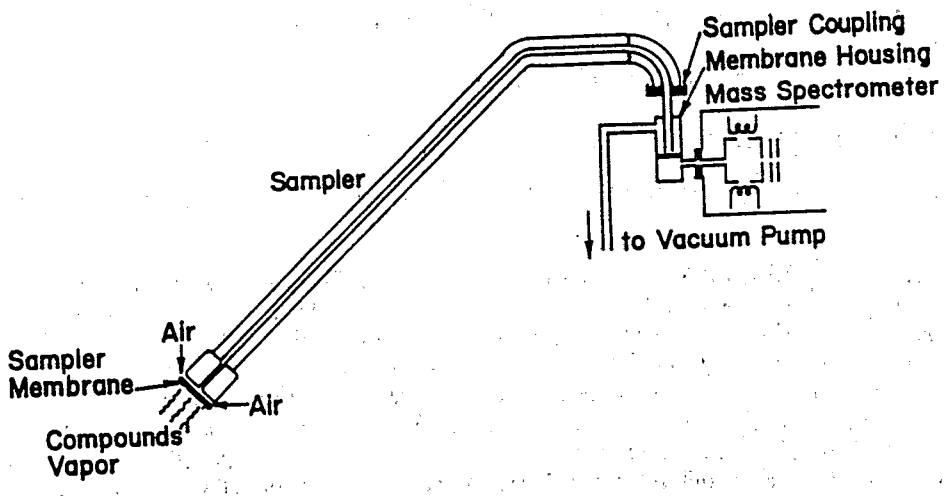

(a)

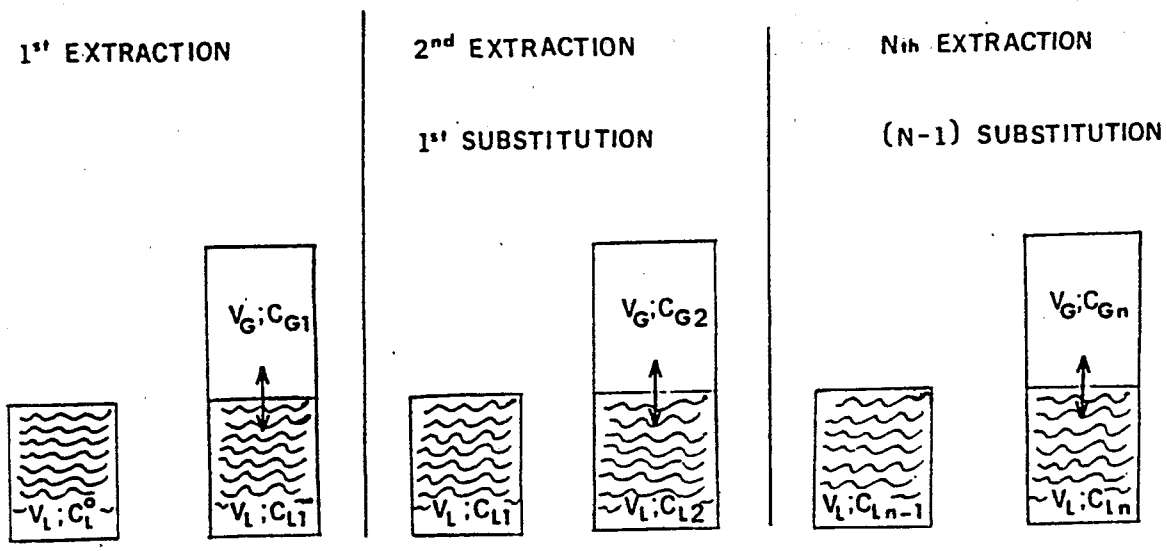

(b)

Figure 10.2.1 Field gas extraction techniques: (a) Vacuum extraction (Hadka and Dickinson, 1988); (b) Diagram of multiple headspace extraction (Ho et al., 1988).

10.2.2 Purge and Trap Methods

Other Names Used to Describe Method: P/T, purge with whole column cryotrapping (P/WCC).

Uses at Contaminated Sites: Extracting volatile organics from soil and water samples.

Method Description: **Purge and trap** techniques involve the forcing of a gas (usually helium) through a sample of water or soil slurry, which entrains the volatile compounds. The entrained volatiles can be fed directly into the analytical instrument (Figure 10.2.2a) or can be used in combination with a sorbent trap (see Section 10.2.5) to concentrate the samples for later thermal extraction (see Section 10.2.4). Figure 10.2.2b shows a schematic of concentrator/purge and trap device.

Method Selection Considerations: **Advantages:** Provides better recovery than vacuum/headspace extraction from water and soil samples. **Disadvantages:** (1) Requires somewhat more complex equipment than vacuum/headspace extraction and also requires a purge gas; and (2) more specialized training is required compared to gas headspace/vacuum extraction.

Frequency of Use: Commonly used for mobile laboratory analysis of volatiles in soil and ground water.

Standard Methods/Guidelines: --

Sources for Additional Information: See Table 10-4.

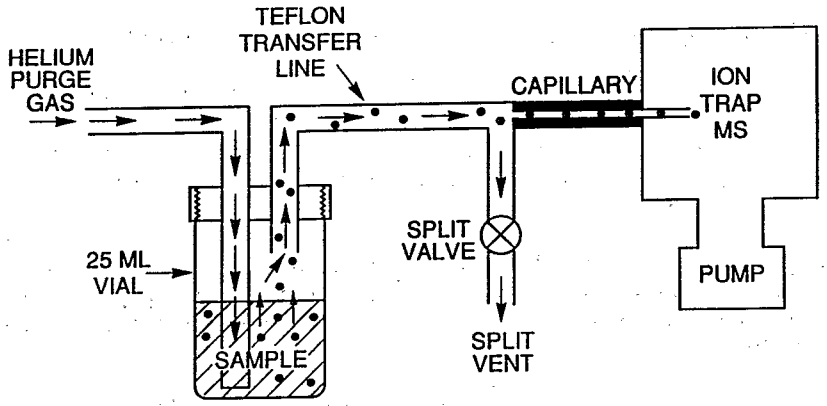

(a)

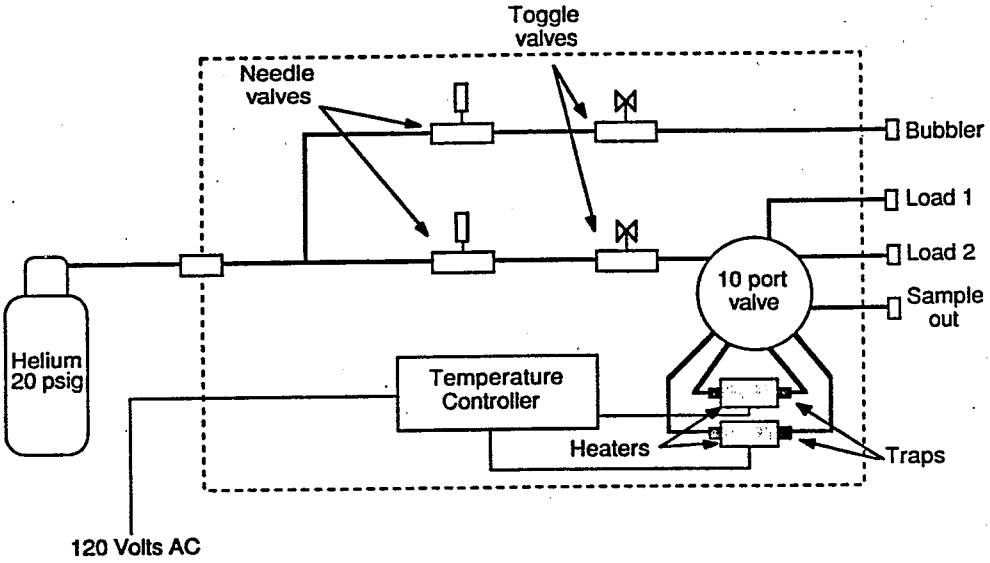

(b)

Figure 10.2.2 Purge and trap techniques: (a) Conventional (Wise et al., 1991a); (b) With concentrator (Sherman et al., 1988a).

10.2.3 Solvent/Chemical Extraction/ Microextraction

Other Names Used to Describe Method: Soil-solvent extraction, liquid-liquid extraction, ultrasonication.

Uses at Contaminated Sites: Extracting volatile, semi-volatile, and non-volatile organic compounds from ground water and soils.

Method Description: **Solvent extraction** procedures involve the use of one or more organic solvents, acids, or other chemical substances and measures, such as filtration and centrifugation, to remove and concentrate the analyte of interest from a soil or ground-water sample (Figure 10.2.3a). Commonly used solvents include acetone, hexane, and methanol. **Microextraction** procedures require only a very small sample for extraction. Each analyte of concern requires its own specific extraction procedure. Simplified extraction procedures can sometimes be used for field screening purposes. Figure 10.2.3b compares a field screening and standard EPA laboratory extraction procedures for PCBs. **Ultrasonication** uses ultrasonic sound waves to accelerate the extraction of chemical species into a solvent.

Method Selection Considerations: **Advantages:** (1) Extraction procedures are compound specific; and (2) simplified extraction procedures have been developed for field screening of PCBs, PAHs, phenols, and pesticides. **Disadvantages:** Depending on the compounds, procedures can be complex and time-consuming.

Frequency of Use: Required for many EPA standard laboratory methods. Standard or simplified field screening extraction procedures are being increasingly used with a variety of field screening and analytical techniques.

Standard Methods/Guidelines: ASTM (in preparation-microextraction), U.S. EPA (1988b-Soil: PCBs, pesticides; Liquid/Liquid: Phenol; Soil or water: Total PNA).

Sources for Additional Information: See Table 10-4.

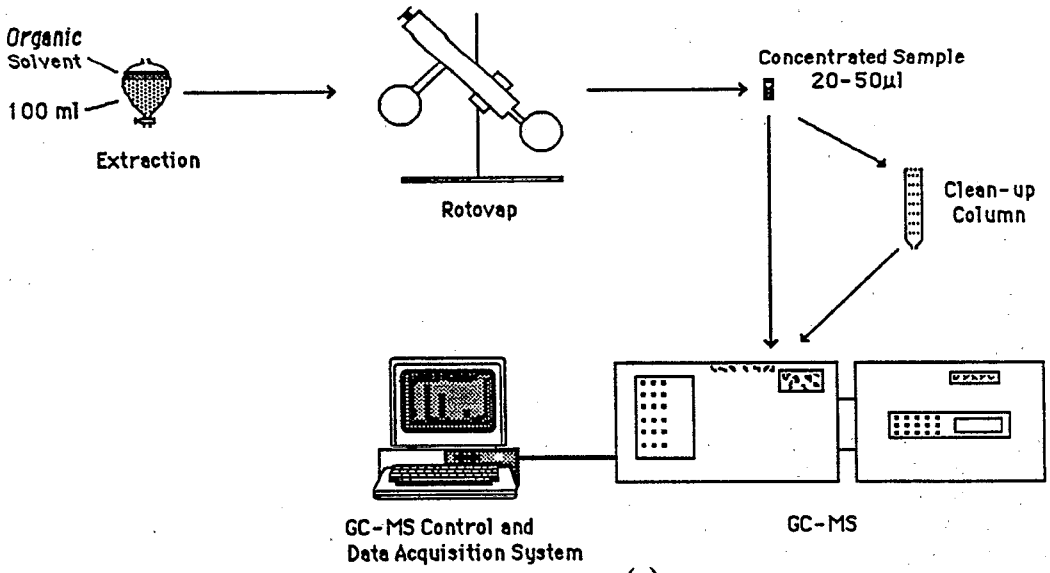

(a)

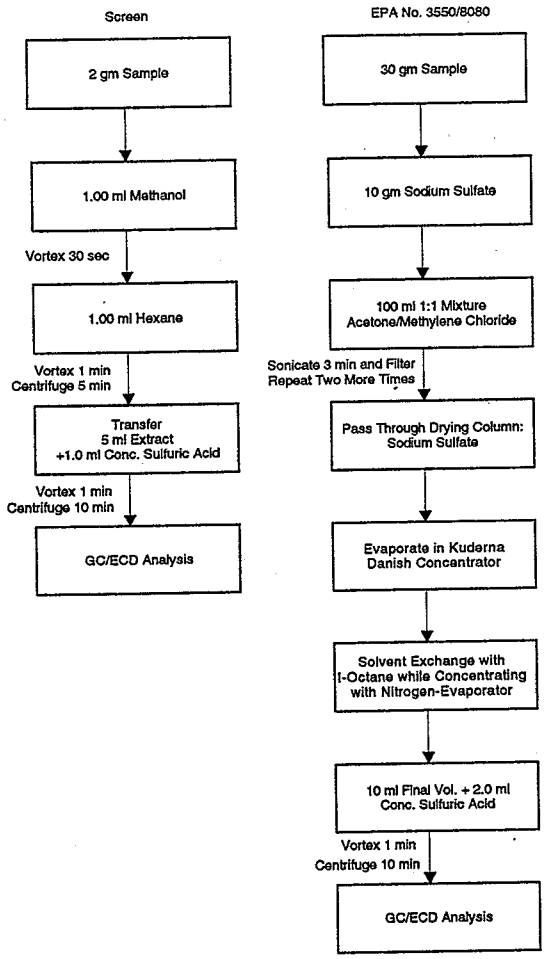

(b)

Figure 10.2.3 Soil extraction: (a) General schematic of organic solvent extraction from soil samples (Overton et al., 1988b); (b) Detailed field screening and EPA 3550/8080 extraction procedures for PCBs (Moy, 1989, by permission).

10.2.4 Thermal Treatment Methods

Other Names Used to Describe Method: Thermal/microwave-assisted digestion, thermal extraction (Ruskan/Pyran thermal chromatograph/Pyrocell), thermal desorption.

Uses at Contaminated Sites: Preparing soil and water samples for instruments requiring a gaseous phase for analysis (Section 10.3); preparing soil and water samples for wet chemistry/colorimetric analysis.

Method Description: **Thermal extraction** techniques have in common the use of heat to prepare samples for subsequent stages of analysis. This can be as simple as using an electric or microwave oven to dry samples (required for soil moisture content determinations and XRF analysis in the laboratory), to highly sophisticated instruments for vaporizing samples (such as ICP torches for atomic emission spectrometry [see Section 10.3.6]). The term **digestion** is commonly used when heating is involved in wet chemistry analytical procedures. Figure 10.2.4a shows a thermal extraction device used with a flame ionization detector, and Figure 10.2.4b shows a schematic of a column thermal extractor used with a mass spectrometer.

Method Selection Considerations: Most thermal treatment techniques and devices are small enough that they can be used in mobile laboratories. Thermal digestion is required for many wet chemistry analytical procedures. Thermal extraction/desorption can sometimes be used as an alternative to solvent extraction for analysis of non-gaseous phase samples in analytical instruments, such as gas chromatographs and mass spectrometers, which require a gaseous phase (see Section 10.3).

Frequency of Use: Colorimetric wet chemistry field test kits for liquids, oils, and solids (see Section 10.5.1) often involve an initial digestion step. Use of thermal extraction procedures in conjunction with gas chromatographs and mass spectrometers in mobile laboratories is a relatively new approach that is becoming more common.

Standard Methods/Guidelines: U.S. EPA (1988b-PAHs using GC with heated column).

Sources for Additional Information: See Table 10-4.

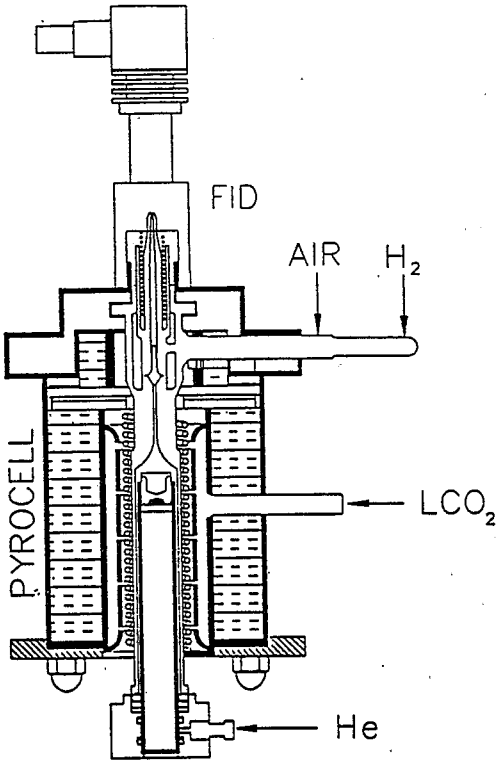

(a)

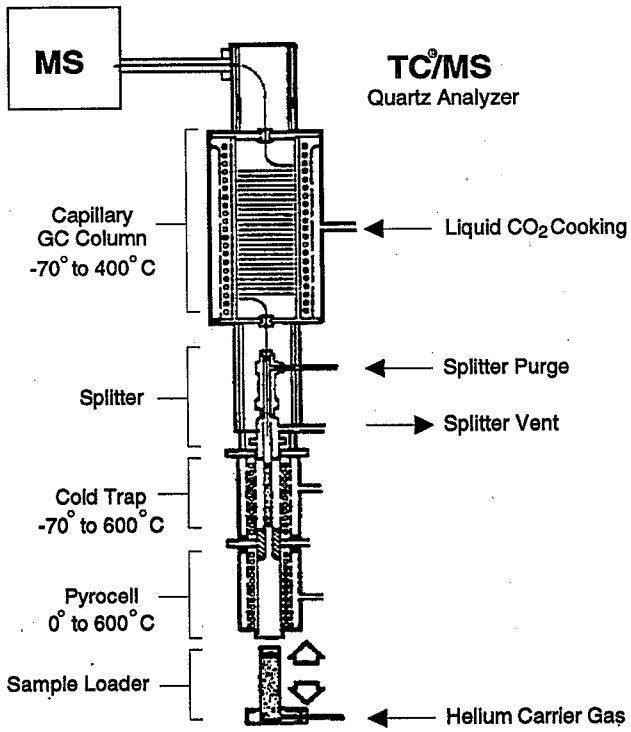

(b)

Figure 10.2.4 Thermal extraction devices: (a) Pyrocell for FID; (b) Column thermal extractor for mass spectrometer (Overton et al., 1988b).

10.2.5 Other Extraction Methods

Other Names Used to Describe Method: Membrane extraction, extraction disks, sorbent/solid phase extraction cartridges, Tenex tubes, cyclohexyl-bonded phase extraction column, supercritical fluid/gas extraction (SFE).

Uses at Contaminated Sites: Extracting contaminants in ground water (sorbent and membrane) and air/soil gases (sorbent).

Method Description: **Sorbent extraction** involves the contact of air or water through a material, such as granular activated carbon (GAC), polyurethane, or resins, which trap organic compounds by sorption or filtration. Figure 10.2.5a illustrates the use of a polyurethane sorbent for air quality sampling. Bonded sorbents have been used for pesticides, PAHs, and phenols. Resin cartridges can be used for concentration of VOCs obtained from purge and trap (see Figure 10.2.2b). GAC is commonly used for passive soil sampling (see Figures 9.4.1a and b) and sometime to extract volatiles from ground-water samples. Once the sample is collected, a thermal extraction technique (Section 10.2.4) typically is used to extract the concentrated sample for instrumental analysis. **Membrane extraction** uses extractant fluids containing organic solvents, such as hexane, flowing through a tubular silicone rubber membrane to selectively extract and concentrate organic compounds of interest from a sample flowing outside the tube. In the simplest application, extractant fluid flows directly to the analytical instrument for analysis (Figure 10.2.5b). For more complex samples, additional separation steps might be required. **Supercritical fluid extraction** (SFE) allows extraction of components from different matrices by means of a supercritical fluid, such as carbon dioxide.

Method Selection Considerations: **Sorbent Advantages:** (1) Is a simple and inexpensive extraction technique for gaseous and water samples; and (2) is most applicable where preconcentration or precise measurements are required. **Sorbent Disadvantages:** (1) Concentrations will be underestimated if sorption is not complete or the sorbent becomes saturated; and (2) typically requires a second extraction step for instrumental analysis. **Membrane Extraction Advantages:** (1) Is a relatively simple technique; and (2) has the potential for automation to eliminate sample handling before it goes into the instrument for analysis. **Membrane Extraction Disadvantages:** (1) Is limited to aqueous samples; and (2) satisfactory extraction might be difficult with complex samples.

Frequency of Use: Sorbents are being widely used where preconcentration of samples is required. Membrane extraction and SFE are relatively new methods that have not been used extensively.

Standard Methods/Guidelines: **Sorbent:** U.S. EPA (1988b-FM-10, FM-16).

Sources for Additional Information: U.S. EPA (1988b-FM-D2, FM-D3). See also, Table 10-4.

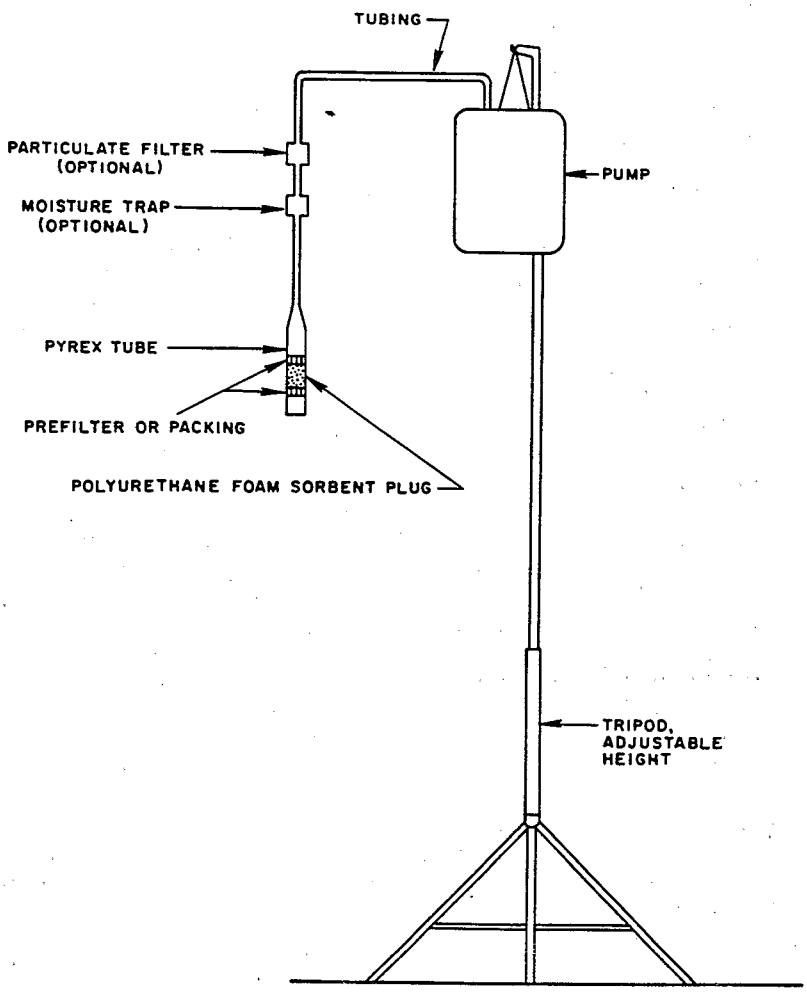

(a)

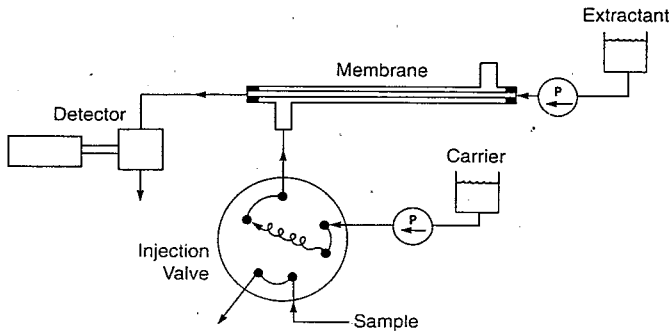

(b)

Figure 10.2.5 Other extraction techniques: (a) Polyurethane sorbent plug sampling train for air quality samples (Ford et al., 1984), (b) Membrane/flow injection system (Melcher and Morabito, 1991).

10.3 GASEOUS PHASE ANALYTICAL TECHNIQUES

10.3.1 Total Organic Vapor Survey Instruments

Other Names Used to Describe Method: OV detectors, photoionization detector (PID/HNU meter), flame ionization detector (FID/Organic vapor analyzer/OVA), argon ionization detector (AID), combustible-gas indicator (explosimeter [ED]/catalytic surface oxidation device).

Uses at Contaminated Sites: **PID:** Surveying aliphatics and aromatics; **AID:** Surveying aliphatics, aromatics, halomethanes, and halethanes. PIDs, FIDs and AIDs also can be used in combination with a gas chromatograph for detecting specific compounds (Section 10.3.3). Explosimeters are used to test manhole/sewers, pipeline leaks, confined areas in sewage plants, and inside tanks for combustible gases.

Method Description: **Photoionization detector** (PID): Uses an ultraviolet lamp as an ionizing source and responds to volatile organic compounds that have an ionization potential less than or equal to the lamp. A PID reports concentrations as total ionizable compounds. **Flame ionization detector** (FID): (Uses a hydrogen flame to ionize organic vapors entering the detector and reports concentrations of total organics as the ppm equivalent to a calibration compound (usually methane).) **Argon ionization detector** (AID): Similar to a PID, except that an argon lamp is used. **Explosimeters** use a sensor (hotwire, catalytic, solid state, etc.) to produce a signal, which is processed and displayed as the percentage of the combustible gas present to the total required to reach the lower explosive limit (LEL) and/or the percent combustible gas by volume. Various calibration gases can be used (butane, pentane, natural gas, and petroleum vapors), but methane is the most common.

Method Selection Considerations: Figure 10.3.1 shows sensitivity ranges for organic vapor monitoring instruments. **Total Detector Advantages:** (1) Are highly portable (FID somewhat less portable than PID) and easy to use; (2) are relatively inexpensive (around $5,000); (3) FID is sensitive to a larger number of volatile organic compounds than PID (including low molecular weight compounds, such as methane, ethane, and certain toxic gases with high ionization potential, such as carbon tetrachloride and HCN); (4) have very rapid response time (seconds); and (5) AID is the most durable detector. **Total Detector Disadvantages:** (1) Are non-specific (they indicate if something is present but do not identify); (2) FID is more complicated than PID and requires hydrogen gas; and (3) AID is somewhat less sensitive than FID and PID. **Explosimeters** are inexpensive and portable.

Frequency of Use: PIDs and FIDs are widely used as survey instruments whenever volatile organics are suspected, and also are commonly used in conjunction with gas chromatographs (see Section 10.3.3). Explosimeters are commonly used where explosive gases are suspected.

Standard Methods/Guidelines: Ford et al. (1984-PID, FID, ED), U.S. EPA (1988b-Section 15).

Sources for Additional Information: Aller (1984-combustible gas indicator). See also, Table 10-5.

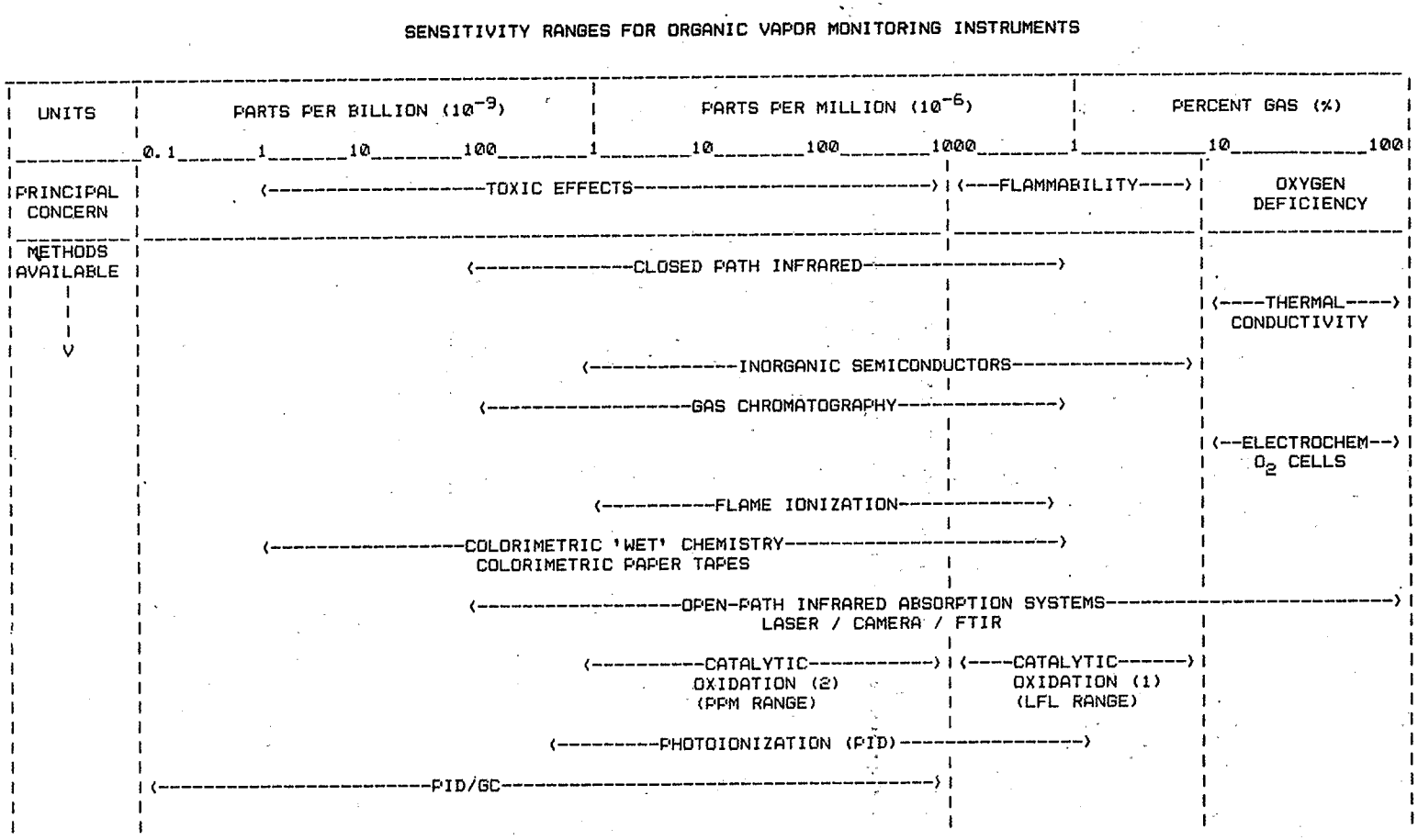

Figure 10.3.1 Sensitivity ranges for organic vapor monitoring instruments (Moore, 1991).

10.3.3 Gas Chromatography (GC)

Other Names Used to Describe Method: Portable, fieldable, or mobile gas chromatograph with a: Flame ionization detector (FID), photoionization detector (PID), argon ionization detector (AID), electron capture detector (ECD), thermal conductivity detector (TCD), flame-photometric detector (FPD), Hall-electrolytic conductivity detector (ELCD), ion trap detector (ITD), microwave [induced] plasma detector (M[I]PD); GC/atomic emission spectroscopy (AES); GC/Fourier transform infrared spectroscopy (FTIR) (see section 10.4.4); GC/mass spectrometry (MS) (see Section 10.3.4).

Uses at Contaminated Sites: **Portable GC:** Assessing volatile organics and other gases (using headspace or purge and trap), soil PAHs, PCP, and PCBs (using extraction techniques). **GC/AES:** Assessing Cl, Br, O, N, P, and S levels.

Method Description: **Gas chromatography** involves the separation of gaseous constituents on a stationary phase in a column, which is either a solid or liquid held on a solid support. **Thermal desorption gas chromatographs** (TD-GC), with a unit for vaporizing samples before entering the column, are used when samples are in liquid phases or soil. Once the analytes have been separated in the column, they are eluted one after another, and then enter a detector attached to the column exit. Numerous types of detectors can be used with a gas chromatograph as listed above under other names. An FID or PID (see Section 10.3.1) can be used to detect specific compounds after they have been separated in the GC and FIDs and PIDs commonly are used in portable GCs. The electron capture detector (ECD) is another commonly used detector. Figure 10.3.3 shows several portable GC units. GC commonly is used as a sample preparation step for other types of instrumentation, such as the mass spectrometer (see Section 10.3.4). Relatively new combinations that show promise for use at contaminated sites include: (1) **GC/MPD-AES**, an experimental technique using GC in combination with a microwave plasma detector (MPD) and atomic emission spectrometry (see Section 10.3.6); and (2) **GC/Fourier Transform Infrared** (see Section 10.4.4).

Method Selection Considerations: **GC Advantages:** (1) Are fairly portable; (2) have very good specificity, depending on detector used, with excellent ability to resolve most components in very complex mixtures; (3) have fair sensitivity (ppb to ppm); and (4) inexpensive compared to mass spectrometer ($10,000 to $20,000 vs. $50,000 to $200,000). **GC Disadvantages:** (1) Are less sensitive than mass spectrometers; (2) have slower response time than mass spectrometers (tens of minutes vs. seconds) and their calibration can be time-consuming; (3) require a library of retention times to identify compounds and non-target compounds might be difficult to identify if detected analytes are not in the library or the quality of the library match is too low to make positive identification; and (4) require bottled gas. **GC/FID:** Universal capability in screening samples. **GC/MS:** Allow better resolution of components in complex mixtures than MS alone and are most commonly used for unequivocal identification of hazardous compounds. **GC/FTIR:** Allow elucidation of chemical structure and are able to identify additional hazardous compounds not detected by GC/MS. **GC/AES Advantages:** (1) Allow detection of elements that have been impossible or difficult to monitor with other GC detectors; (2) element-specific detection can save time in sample preparation; (3) multiple element detection reduces need for GCs with multiple detectors; (4) element ratios can reduce time for interpretation of GC/MS and GC/FTIR data for nontarget compounds; (5) size and weight and other requirements similar to GC/MS field laboratory instrumentation; and (6) detection limits comparable to GC/FID and GC/FPD. **GC/AES Disadvantages:** Instrumentation still in developmental stages. **Other Detectors:** ECDs are highly sensitive to halogenated organic molecules and can be used to analyze for PCBs in the presence of unhalogenated hydrocarbons, such as oil. Detectors, such as NPD, ECD and ELCD (Hall detector), have lower detection limits for specific elements.

Frequency of Use: GC is the most well developed and accurate field analytical technique for organic compounds when used with an appropriate detector. The most commonly used detectors include PID, FID, AID, ECD, Hall detector (ELCD), and TCD.

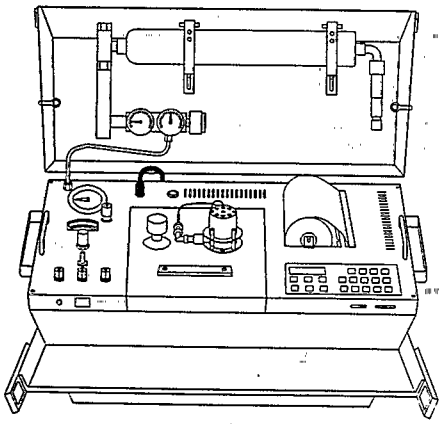

(a)

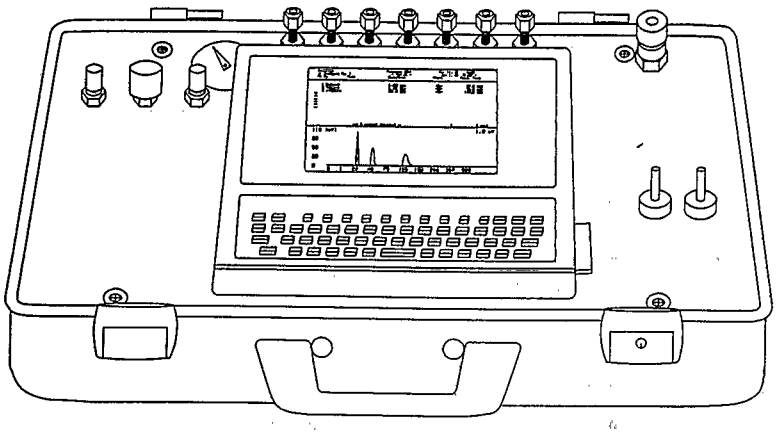

(b)

Figure 10.3.3 Portable gas chromatographs: (a) HNU System GC 311; (b) Photovac 10S PLUS (U.S. EPA, 1991b).

Standard Methods/Guidelines: Ford et al. (1984), U.S. EPA (1987-Exhibit 7A-1, mobile lab protocol for organics), U.S. EPA (1988b-TD/GC, GC/ECD, Mobile GC).

Sources for Additional Information: Davis et al. (1985), Nielsen et al. (1992), Szelewski and Wilson (1988), U.S. EPA (1991b, 1992), Weslowski and Alwan (1991). See also, Table 10-5.

10.3.4 Mass Spectrometry (MS) and GC/MS

Other Names Used to Describe Method: Fieldable/mobile mass spectrometer (MS), mobile tandem MS (MS/MS, MINITMASS), GC/MS, GC/ITMS or ITD (ion trap mass spectrometer or ion trap detector), thermal desorption (TD) or thermal extraction (TE), GC/MS.

Uses at Contaminated Sites: **TD-GC/MS:** Assessing VOCs (water, soil/sediment, soil gas, air), PCBs, PAHs, and pesticides (soil/sediment); **GC/ITMS:** Assessing VOCs (air, water, soil) (Wise et al. [1991a] list detection limits for 30 VOCS in air, and 21 VOCs in water).

Method Description: **Mass spectrometry** techniques involve conversion of compounds in a sample into charged ionic particles that consist of the parent ion and ionic fragments of the original molecule. Distinctive mass/charge ratios allows for identification of compounds, while the magnitude of ion currents at various mass settings is related to concentration. Major components of a mass spectrometer include: (1) The inlet system, (2) the ion source, (3) the electrostatic accelerating system, and (4) the detector and readout system that gives a mass spectrum recording the numbers of different kinds of ions (Figure 10.3.4a). Mass spectrometers often are used in conjunction with gas chromatography (see Section 10.3.3). Figure 10.3.4 illustrates portable, fieldable, and mobile laboratory mass spectrometers.

Method Selection Considerations: **MS Advantages:** (1) Have very good specificity in noncomplex matrix; (2) are very sensitive (ppb); (3) have rapid response time (seconds); and (4) very small sample sizes (milligram to microgram) can be used. **MS Disadvantages:** (1) Have poor resolution in complex mixtures (can be overcome by using GC/MS); (2) are expensive ($50,000 to $200,000); (3) are large, heavy, and not very rugged; (4) require high vacuum pumps and a large amount of power; (5) are complex instruments requiring long set up time; (6) require a library of spectra; and (7) calibration procedures are more time-consuming than for GC.

Frequency of Use: Some use in mobile laboratories. Field instruments are in developmental stages.

Standard Methods/Guidelines: U.S. EPA (1988b-GC/ITMS, MS/MS).

Sources for Additional Information: Davis et al. (1985). See also, Table 10-5.

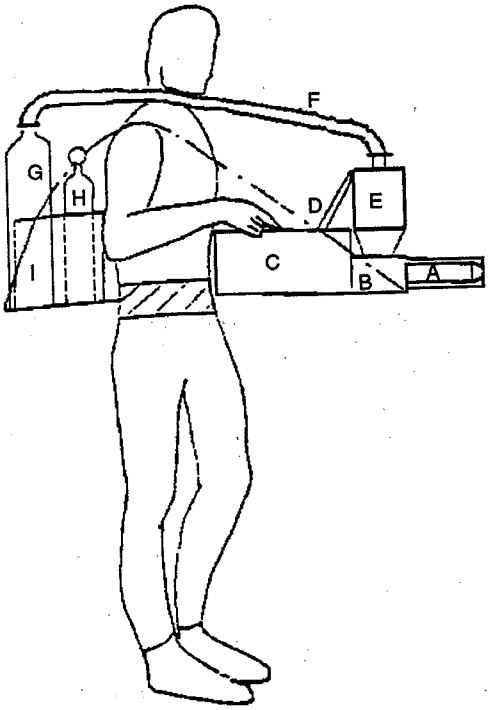

(a)

(b)

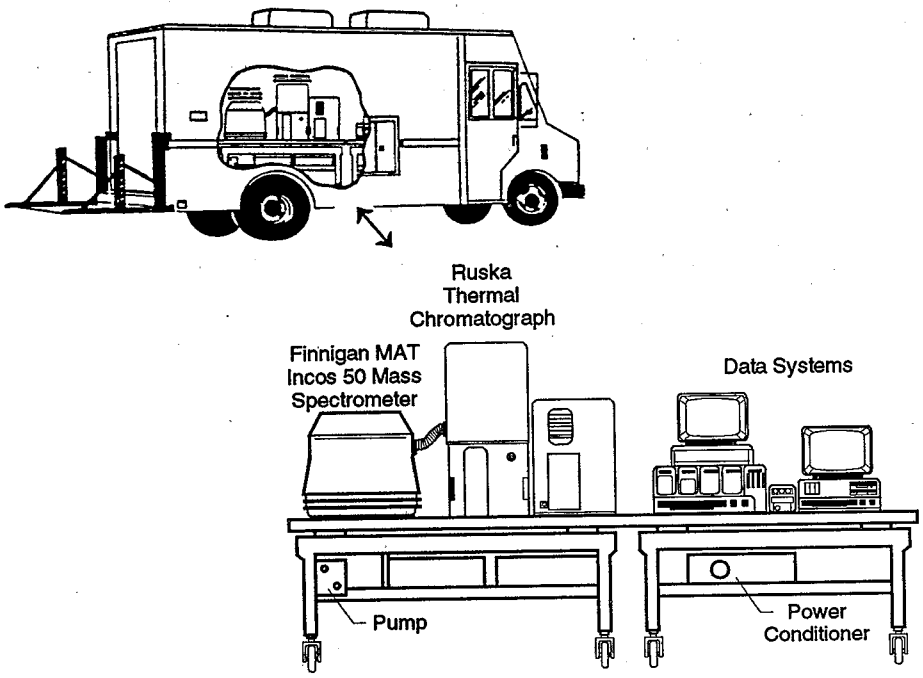

Figure 10.3.4 Mass spectrometers: (a) Schematic of man-portable GC/MS system: (A) Vapor inlet/transfer GC column, (B) MSD analyzer, (C) control electronics, (D) portable 386 computer, (E) molecular drag pump, (F) vacuum hose, (G) vacuum reservoir, (H) carrier gas, and (I) 24v DC battery (Meuzelaar et al., 1991), (b) Fieldable mass spectrometer mounted in a 4-wheel drive vehicle (Hadka and Dickinson, 1988), (c) Mobile thermal chromatograph/mass spectrometer (Greenlaw et al., 1989, by permission).

10.3.5 Atomic Absorption Spectrometry (AAS)

Other Names Used to Describe Method: --

Uses at Contaminated Sites: Analyzing heavy metals, organometallic compounds, and other elements in water and soil/solids.

Method Description: AAS involves the measurement of radiation absorbed by electrons in a vaporized liquid sample. All AAS instruments have the following basic features (Figure 10.3.5a): (1) A light/radiant energy source that emits resonance line radiation; (2) a sample chamber in which the sample is fed as an aerosol and vaporized; (3) a device for selecting only one of the characteristic wavelengths (visible or ultraviolet) of the element being determined; (4) a detector, usually a photomultiplier tube, which measures the amount of absorption; and 5) a readout system (strip chart recorder, digital display, meter, or printer). Techniques for vaporizing the sample include **flame** (aerosol mixed with fuel and oxidant gas), **furnace** or **electrothermal** (sample is deposited at room temperature in a graphite tube and vaporized by heating), **hydride generation** or derivitization (elements such as As, Se, Sb, and Sn are converted to gaseous hydrides before being vaporized in small quartz tube furnaces), and **cold vapor** (for mercury only). AAS instruments can have one or two beams (Figure 10.3.5b and c), and more sophisticated (and more expensive) instruments have more than one channel for simultaneous determination of more than one element. Multi-element sequential AAS instruments can be programmed to automatically determine chosen elements sequentially.

Method Selection Considerations: **Advantages:** (1) Simpler instruments, such as single-beam flame AAS, are relatively inexpensive (around $6,000 in 1986); (2) operation is very simple and can be partially automated; (3) in many determinations, standardization is easy and straightforward; and (4) have low detection limits (ppb) and high accuracy (furnace AAS has the lowest detection limits; flame AAS is generally 10 to 100 times higher). **Disadvantages:** (1) Flame AAS can only measure one element at a time and is not well suited for refractory elements, such as boron and vanadium; (2) time required for heating cycle of furnace AAS makes it slow compared to flame AAS; (3) sample preparation requires great care and can be time consuming; and (4) matrix interferences might affect results for specific elements (for example Al, phosphate, and sulfate interfere with Ca determinations).

Frequency of Use: AAS and inductively coupled plasma atomic emission spectrometry (Section 10.3.6) are probably the two most widely used laboratory techniques for elemental analysis of aqueous and solid samples. Many mobile laboratories have AAS for analysis of heavy metals and hydride derivitization. AA has been used less commonly in mobile laboratories for analysis of organometallics.

Standard Methods/Guidelines: U.S. EPA (1988b-FM-1), U.S. EPA (1987-protocol 7A-3).

Sources for Additional Information: Baker and Suhr (1982), Fishman and Friedman (1989), Thompson et al. (1989).

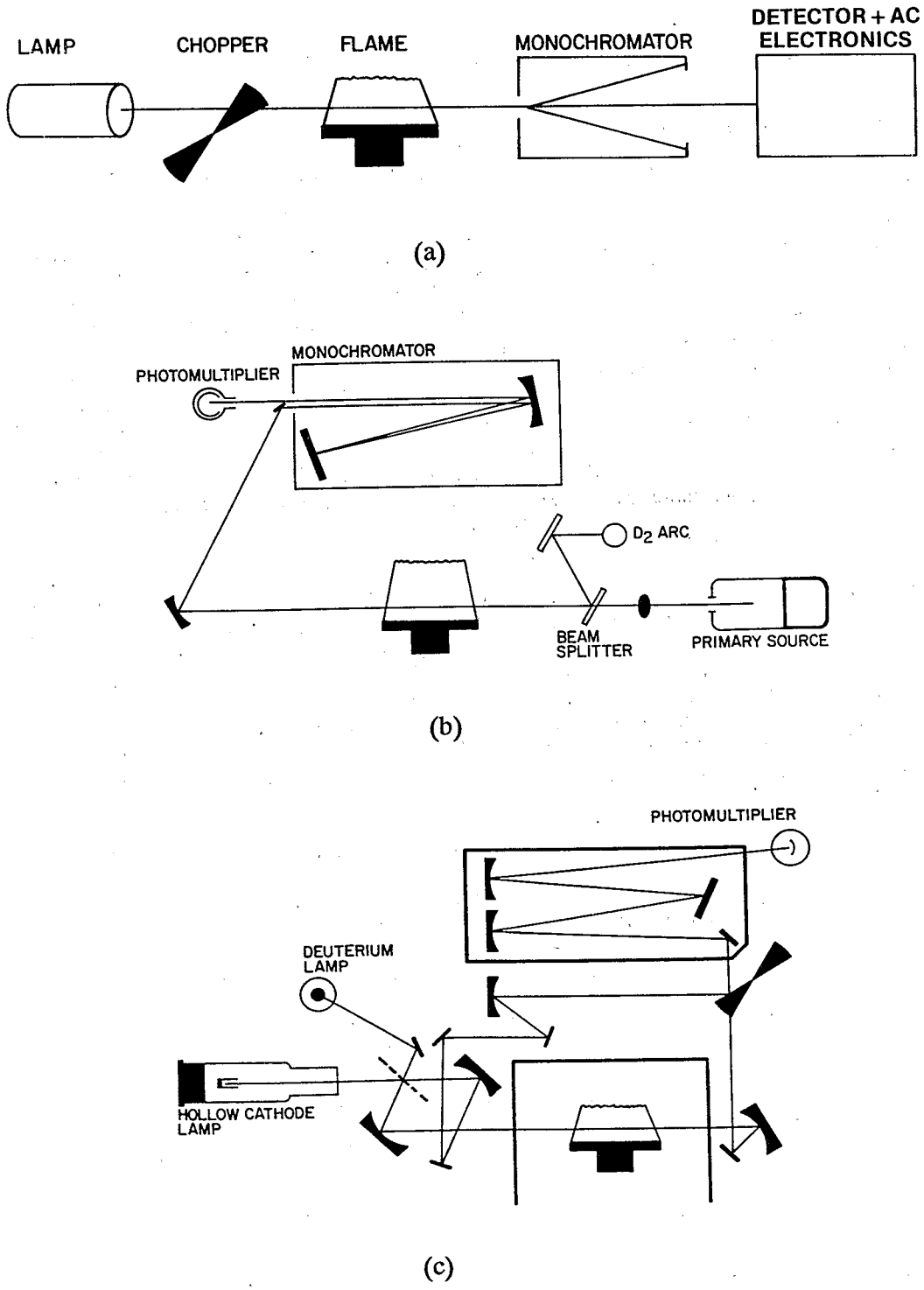

Figure 10.3.5 Atomic absorption spectrometers: (a) Essential components; (b) Single-beam instrument; (c) Double-beam instrument with background correction using a deuterium lamp (Baker and Suhr, 1982, by permission).

10.3.6 Atomic Emission Spectrometry (AES)

Other Names Used to Describe Method: Optical emission spectrometry (OES), flame emission spectrometry (FES)/flame photometry.

Uses at Contaminated Sites: Analyzing heavy metals and other elements in water and soil/solids.

Method Description: AES involves the excitation of electrons in liquid samples and measurement of the radiation emitted when they relax to an unexcited state. Each element emits radiation of a characteristic wavelength and concentrations are proportional to the intensity. AES using a flame as an excitation source, called **flame emission spectrometry** (FES) or flame photometry, has been in use since the 1860s. A variety of other excitation sources can be used (such as direct current arc, alternating current spark, and direct current discharge plasmas), but the most commonly used source today is the inductively coupled radiofrequency plasma (**ICP**) torch (Figure 10.3.6).

Method Selection Considerations: **Advantages:** (1) A large number of elements can be measured simultaneously (10 to 20 for FES and 20 to 35 to ICP-AES), making analysis for any one element very rapid; (2) ICP-AES linear range for detection is greater than AAS, reducing the amount of sample handling and dilution for analysis; (3) FESs are simple and inexpensive to operate; and (4) ICP provides a highly stable, sensitive and relatively interference-free excitation source for solution samples, and is able to handle refractory elements that AAS and FES cannot. **Disadvantages:** (1) Furnace AAS provides greater sensitivity for arsenic, lead, and selenium; and (2) solids samples requires careful preparation of solutions for analysis.

Frequency of Use: ICP-AES and AAS (Section 10.3.5) are probably the two most widely used laboratory techniques for elemental analysis of aqueous and solid samples.

Standard Methods/Guidelines: --

Sources for Additional Information: Baker and Suhr (1982-FES), Fishman and Friedman (1989), Soltanpour et al. (1982-ICP-OES), Thompson et al. (1989-ICP-AES).

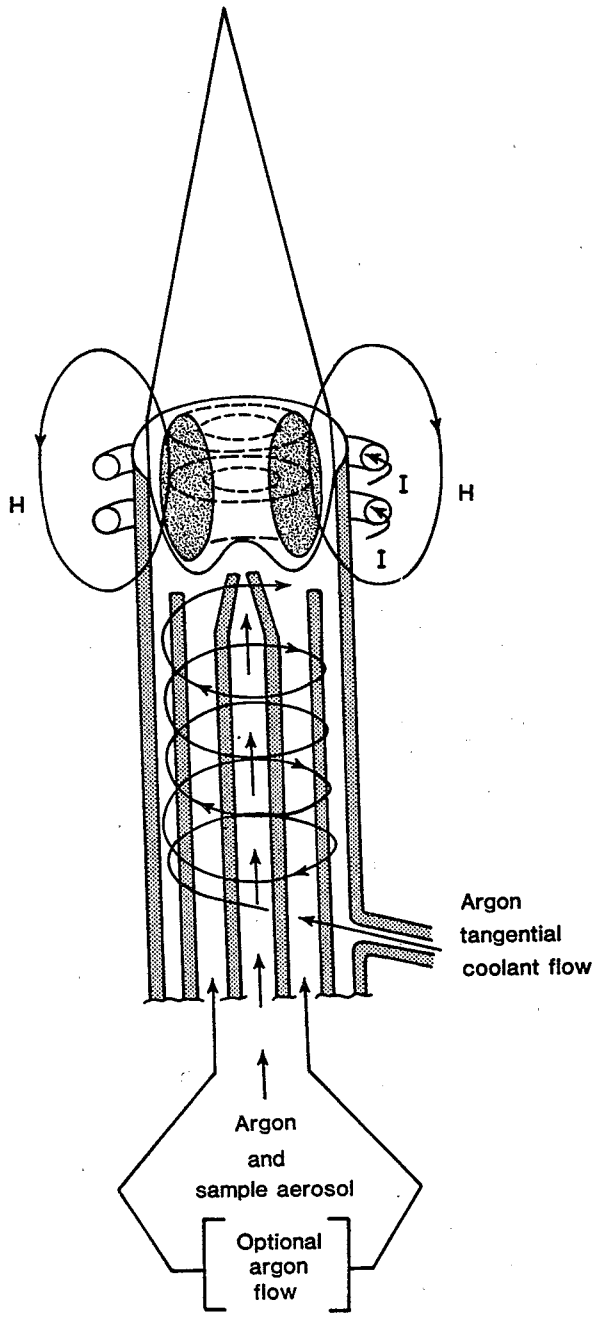

Figure 10.3.6 Plasma torch configuration for ICP-AES (Fishman and Friedman, 1989).

10.3.7 Ion Mobility Spectrometry (IMS)

Other Names Used to Describe Method: Plasma chromatography.

Uses at Contaminated Sites: **IMS:** Detecting microorganisms, anilines, nitrosoamines, organophosphorus esters, organic sulfides and arsenicals, selected explosives, and many other organic compounds (Reategui et al. [1988] identify more than 40 organic and inorganic compounds or groups of compounds that can be detected by IMS); **GC/IMS:** Detecting alcohols, ketones, BTEX, aldehydes, halocarbons, and chlorinated aromatics.

Method Description: **IMS** resembles a cross between a flame ionization detector and a mass spectrometer. Figure 10.3.7 shows the operation of an IMS cell. A sampling pump draws air though a semipermeable membrane, which is selected to exclude or attenuate possible interferents. The sample is ionized in a reaction region through interaction with a weak plasma of positive and negative ions produced by a radioactive source. A shutter grid allows periodic introduction of the ions into a drift tube, where they separate based on charge, mass, and shape, with the arrival time recorded by a detector. The identity of the molecules is determined using a computer to match the signals to IMS signatures held in memory. If the IMS signature is known it also is possible to program the instrument to detect specific compounds of interest.

Method Selection Considerations: **IMS Advantages:** (1) Combines the simplicity and sensitivity of ionization detectors (Section 10.3.1) with the ability to distinguish specific compounds in complex matrix; (2) has very good sensitivity (sub ppb to ppm); (3) has very fast response time (seconds); (4) is portable and rugged; and (5) is inexpensive compared to MS and comparable in price to GC ($5,000 to $25,000). **IMS Disadvantages:** (1) Provides specific identification of fewer compounds than GC or MS; (2) is better than MS at identifying certain target compounds in a complex mixture, but GC provides better resolution in this situation; and (3) requires a library of ion mobilities.

Frequency of Use: **IMS:** Recent development of portable IMS detectors might make the technique an alternative to FID and GC.

Standard Methods/Guidelines: --

Sources for Additional Information: U.S. EPA (1991b, 1992). See also, Table 10-5.

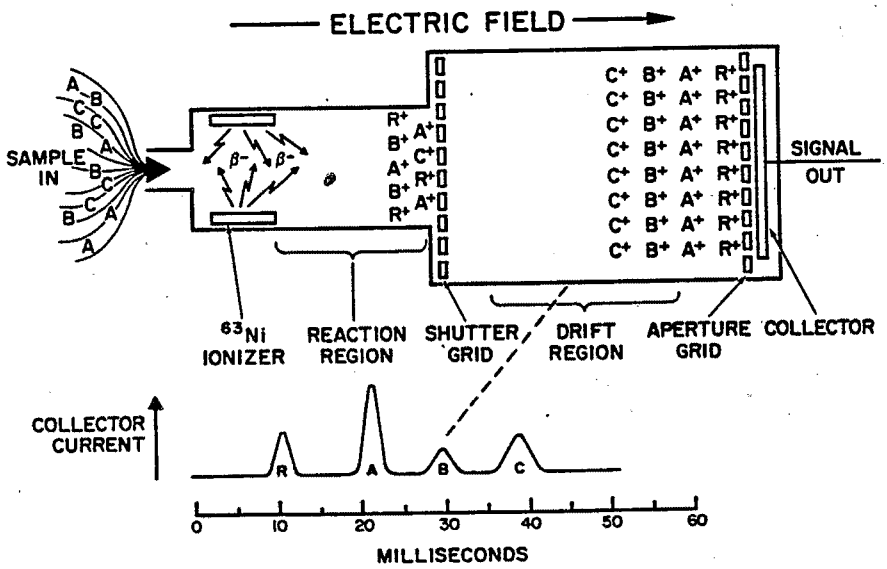

Figure 10.3.7 Theory of operation of ion mobility spectrometer (Reategui et al., 1988).

10.4 LUMINESCENCE/SPECTROSCOPIC ANALYTICAL TECHNIQUES

10.4.1 X-Ray Fluorescence (XRF)

Names Used to Describe Methods: Portable XRF, X-ray fluorescence spectroscopy/spectrometry, x-ray emission spectrography, x-ray spectrochemical analysis.

Uses at Contaminated Sites: Detecting heavy metals and other elements in soil/solids samples. Reported elements As, Cd, Cr, Cu, Fe, Hg, Mn, Ni, Pb, Sn, and Zn.

Method Description: **XRF** uses primary x-rays to irradiate a solid sample, which causes elements in the sample to emit secondary radiation of a characteristic wavelength (Figure 10.4.1a). Concentration of an element is proportional to the intensity of the secondary radiation emission. Two basic types of detectors are used to detect and analyze the secondary radiation. **Wavelength-dispersive** XRF spectrometry uses a crystal to diffract the x-rays, as the range of angular positions are scanned using a proportional or scintillation detector (see Section 1.5.4 for description of these detectors). **Energy-dispersive** XRF spectrometry uses a solid-state, Si(Li) detector from which peaks representing pulse-height distributions of the x-ray spectra can be analyzed. It is the latter type of detector that has allowed development of field-portable instruments (Figure 10.4.1b). Figure 10.4.1c shows the effective depth of penetration of various materials. Various terms have been used to describe this technique, but XRF is the most commonly used term in the literature on investigation of contaminated sites.

Method Selection Considerations: **Advantages:** (1) Is about one-tenth the cost of conventional laboratory analyses; (2) sample preparation is minimal compared to conventional analytical techniques; (3) allows simultaneous determination of several elements; and (4) very portable energy-dispersive XRF instruments are now available (Figure 10.4.1b) and more accurate wavelength-dispersive XRF instruments can be used in mobile laboratories. **Disadvantages:** (1) Detection limits for portable instruments (10s to 100s ppm) typically are an order of magnitude higher than ICP-AES; (2) laboratory use with liquid samples requires preconcentration or precipitation, which is time consuming; and (3) the relatively shallow depth of penetration of soil materials (mm) means that collection and processing by grinding samples is generally required to obtain reproducible readings using a portable probe.

Frequency of Use: Along with total/specific organic vapor detectors and gas chromatographs, XRF is the most mature of the portable field screening techniques that have developed in recent years.

Standard Methods/Guidelines: **Laboratory XRF:** Jones (1982); **Field screening:** U.S. EPA (1987-Protocol 7A-4), U.S. EPA (1988b).

Sources for Additional Information: Raab et al. (1991), Thompson et al. (1989). See also, Table 10-5.

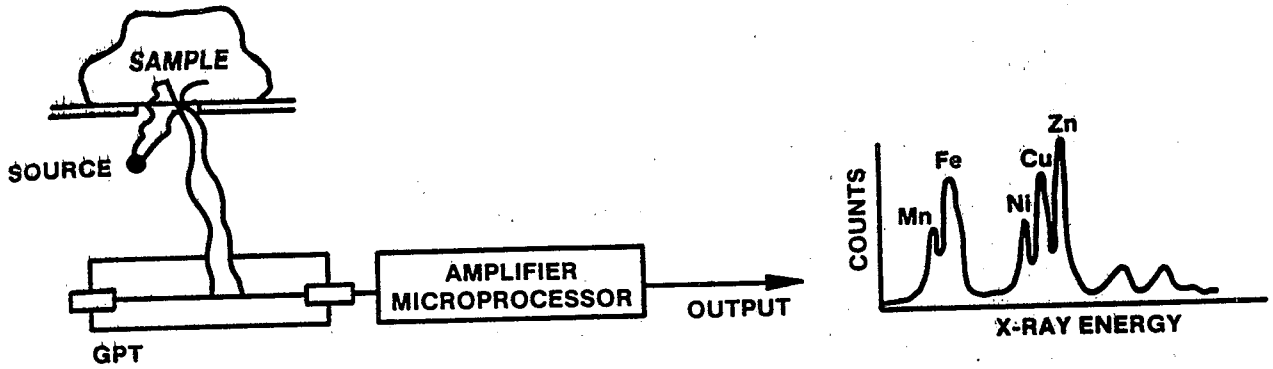

(a)

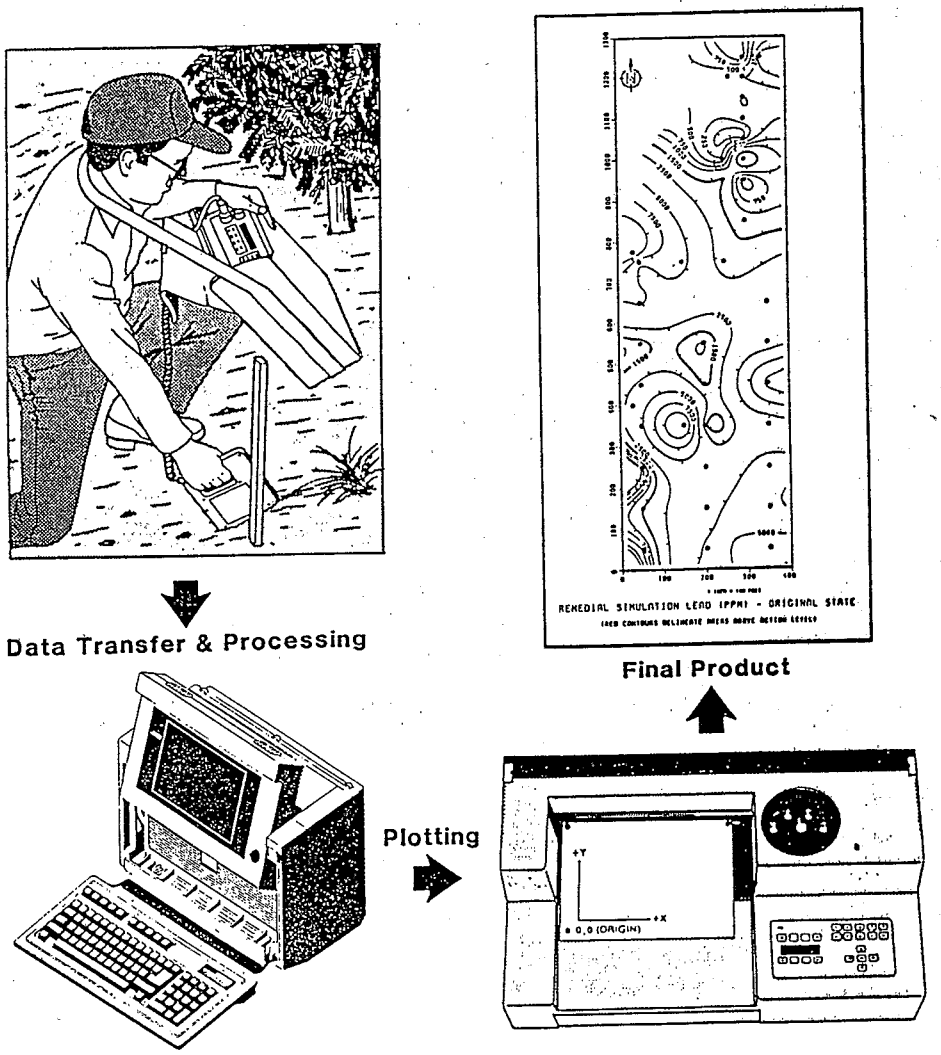

(b)

Figure 10.4.1 X-ray fluorescence: (a) Schematic indicating the field-portable XRF analytical process (Glanzman, 1988); (b) Process for real time, on-site XRF measurements, data transfer, processing and plotting (Raab et al., 1991, by permission).

10.4.2 LUMINESCENCE/SPECTROSCOPIC ANALYTICAL TECHNIQUES

10.4.2 Other Luminescence Techniques

Names Used to Describe Methods: Fluorometry/fluorimetry/spectrofluorometry: UV fluorescence spectrophotometer; synchronous fluorescence/luminescence (SF/SL); laser fluorometry/laser induced fluorescence (LIF); solid state fluorescence, x-ray fluorescence (Section 10.4.1); room-temperature phosphorimetry (RTP).

Uses at Contaminated Sites: **UV and synchronous fluorescence:** Performing semiquantitative analysis of semivolatile polynuclear aromatic hydrocarbons (PAHs/PNAs); field screening of BTEX. **RTP:** Analyzing PCBs.

Method Description: **Fluorometry** is a photoluminescent technique in which the electronic state of a molecule is elevated by absorption of electromagnetic radiation. When the molecule returns to its ground state, radiation is emitted (typically ultraviolet or visible radiation for most fluorometric techniques) to produce a distinctive excitation and emission spectrum. Instruments used for fluorometric analysis range from simple filter fluorometers to very sophisticated spectrophotofluorometers. These instruments contain four principal components: (1) A source of excitation energy (UV, laser, x-rays, etc.), (2) a sample cuvette, (3) a detector to measure the photoluminescence, and (4) a pair of filters or monochromators for selecting the excitation and emission wavelengths. **UV fluorescence** has been used in a number of applications for field screening: (1) For semiquantitative analysis of solvent extracted PAHs, (2) for analysis of samples using high performance liquid chromatography (Section 10.5.3), (3) in conjunction with fiber optic sensors (Section 5.5.6), and (4) as a surface contamination detector, in which a non-fluorescing substance sprayed on the ground surface reacts chemically with the contaminant of interest to form a substances that fluoresces with UV excitation. Fiber optic sensors commonly use UV fluorescence (see Section 5.5.6). **Synchronous** fluorescence, or luminescence, involves the use of both emission and excitation monochromators to record the luminescence signal, which allows greater selectivity in the analysis of environmental samples. **RTP** is based on detecting the phosphorescence emitted from organic compounds adsorbed on solid substrates at ambient temperatures (conventional phosphorimetry requires cryogenic equipment). A recently developed test for PCBs using RTP involves a rapid extraction procedure (1 to 3 minutes), followed by placement of a few microliters of the sample solution on a filter paper. The sample is dried for about three minutes with a heating lamp and transferred to a spectrofluorimeter equipped with a phosphoroscope. The presence and concentration of PCBs can be determined by the spectral signature and intensity. Table 10.4.2 provides additional information on UV-visible luminescence, synchronous fluorescence, room-temperature phosphorescence, and low-temperature luminescence methods.

Method Selection Considerations: **Advantages:** (1) Instrumentation is relatively simple and portable; and (2) UV fluorescence can be used for rapid semiquantitative analysis of total PAHs in soil. **Disadvantages:** Analysis of complex samples can be difficult due to spectral overlap of different luminescing compounds (SF can partly overcome this).

Frequency of Use: Fluorometry in combination with fluorescent dyes probably is the most common technique used in karst limestone tracer studies. PAH-extract/UV fluorescence has been demonstrated as a good field screening technique for semiquantitative analysis of polynuclear aromatic compounds in soil. **Synchronous fluorescence** and **RTP** only recently have been tested for field screening of contaminants and are still in the developmental stages.

Standard Methods/Guidelines: U.S. EPA (1988b-total PNA with UV fluorescence).

Sources for Additional Information: Davis et al. (1985-fluorometry), Eastwood and Vo-Dinh (1991). See also, Table 10-5.

Table 10.4.2 General Characteristics of UV-Visible Luminescence, Synchronous Fluorescence, Room Temperature Phosphorescence, and Low Temperature Luminescence Techniques of Field Analysis (See end of Table 10.4.3 for definitions and abbreviations)

Applicability	Advantages	Limitations	Sensitivity	Current Field Applicability	Related Lab Techniques & Sensors
UV-vis Luminescence (Fluorescence and Phosphorescence)					
Polyaromatic Compounds Fluorescent Dyes Fluorometric Reaction Products PCBs Phenols Pesticides Semivolatiles Nonvolatiles Petroleum Oils	Most Sensitive Method for Trace and Ultratrace Analysis when Applicable Instrumentation Readily Available No Interference by Water Few Interferences by Nonaromatics Some Structural Specificity - Enhanced by Special Techniques Very Selective - Enhanced by Time and Wavelength Variability Can Distinguish Geometrical Isomers	Limited to Compounds with Fairly High Luminescence Yields (Usually PACs, unless Derivatized) Relatively Unspecific for Structural Information (Compared to IR) Quantitation Complicated by Differences in Quantum Yields, Quenching, Microenvironments Limited Reference Spectra Available	Excellent Sensitivity ppb (pptrillion or Less with Laser Excitation) Dependent on Quantum Yields	Portable Instruments Available Field Deployable Instruments Available Flow-through Oil-Water Monitors and HPLC with Multichannel Detectors Front Surface - RTP	Luminescence Techniques - Fluorescence - Phosphorescence - Synchronous - Time and Phase Resolution - Polarization - RT and LT - 3D - Microscopy Fiber Optic Fluorometric Sensors Multichannel Detectors - Diode Arrays - CCDs Fluorescence Quenching or Energy Transfer - Indirect Ways to Measure Non-luminescent Molecules
Synchronous Fluorescence					
Increased Specificity for Individual PACs or PAC Classes in Complex Mixture Petroleum Oils Creosotes	Increased Specificity Less Spectral Overlap Classification of PAHs by Number of Rings Useful for Screening Combine with Other Luminescence Techniques	Decrease in Sensitivity with Narrower Bandpasses and Wavelength Offset Loss of Vibrational Structure in Spectrum Need Dual Scanning Monochromators Need Polychromatic Source	Good Sensitivity Slightly Lower than Fluorescence Emission Dependent on Instrumental Conditions Dependent on Stokes Shift of Compound	Portable Instruments under Development Field Deployable Instruments Available	LT Measurements Time and Phase Resolution Derivative Remote Monitor under Development Synchronous Phosphorescence
Room Temperature Phosphorescence (RTP)					
Most Luminescent PACs, PCBs, PAHs Directly or with Heavy Atom Perturber	Easy Sample Prep Eliminates Scatter and Fluorescence Background Longer Lifetimes than Fluorescence No Need for Cryogenic Instrumentation Useful for Screening Additional Selectivity Due to Perturber	Oxygen may Quench in Solution Less Structure than LTP Substrate/Technique Dependent Quantitation may be Complicated Limited Corrected Spectra Available	Good Sensitivity ppb in Favorable Cases Dependent on Quantum Yield of Compound Dependent on Efficiency of Perturber	Portable Instruments Under Development Field Deployable Instruments Available Front Surface Rigid Medium - Filter Paper - TLC Plate Dosimetry Easy Sample Prep	Can Compare with LT Techniques for Optimization Time Resolution TLC Organized Medium - Micelle Solution - Cyclodextrin
Low Temperature Luminescence (Fluorescence and Phosphorescence)					
Luminescent PACs PCBs	Higher Sensitivity, Specificity than RT Vibrational Structure Similar to Raman Quantitation Over 6 Orders of Magnitude Distinguish Isomers Very Selective - Enhanced by Time and Wavelength Variability	Cryogenic Apparatus More Complicated Need Skilled Operator Less Reference Spectral Data than RT Some Analytes Matrix Dependent	Excellent Sensitivity pptrillion in Optimal Cases Improved with Laser	Limited Semi-Field Deployability	LT Techniques - Shpolskii Spectra - Laser-line Narrowing - Site Selection - Matrix Isolation Low Temperatures 77 K to 4 K

Source: Eastwood and Vo-Dinh (1991)

10.4.3 Other Spectrometric/Spectro-Photometric Techniques

Other Names Used to Describe Method: Ultraviolet (UV) spectroscopy, UV spectrophotometry, visible absorption spectroscopy, spectrophotometry, IR infrared (laser diode) spectrometry, photoacoustic spectrometry.

Uses at Contaminated Sites: **IR spectrometry:** Identifying and characterizing amorphous and crystalline inorganic or mineral phases; performing functional-group and qualitative analysis of organic compounds.

Method Description: **Spectrophotometry** encompasses a number of techniques involving measurement of the absorption spectra of narrow band-widths of radiation (visible and ultraviolet). Colorimetric techniques discussed in Section 10.5.1 require spectrophotometric measurements, as do luminescence techniques discussed in Section 10.4.2. **Infrared (IR) spectrometry** involves the measurement of infrared radiation absorption bands from low-level transitions between molecular energy levels. Different inorganic and organic functional groups have distinctive absorption spectra that help identify mineral or chemical phases in a sample. Table 10.4.3 provides additional information on UV-visible absorption, dispersive, and near-infrared methods.

Method Selection Considerations: **Spectrophotometry:** Integral to other techniques covered elsewhere. **IR Spectrometry Advantages:** Most useful when used in conjunction with x-ray diffraction (XRD) because it is capable of characterizing amorphous inorganic and mineral phases, which cannot be detected by XRD (Section 10.6.1). **IR Spectrometry Disadvantages:** (1) Results are primarily qualitative and require use of other techniques for definitive identification (quantitative analysis of multicomponent systems is possible, but very difficult); and (2) for solids samples, particle size must be less than the wavelength of the infrared radiation.

Frequency of Use: **IR Spectrometry:** Relatively common laboratory method for mineralogical study. Use for characterization of soils and waste has been limited.

Standard Methods/Guidelines: White and Roth (1986-IR spectrometry).

Sources for Additional Information: Eastwood and Vo-Dinh (1991).

Table 10.4.3 General Characteristics of UV-Visible Absorption, Dispersive Infrared, and Near Infrared Techniques for Field Analysis

Applicability	Advantages	Limitations	Sensitivity	Current Field Applicability	Related Lab Techniques & Sensors
		UV-vis Absorption			
Polyaromatic Compounds (PACs) Dyes Colorimetric Reaction Products	Mature Technique Instrumentation Readily Available Good Quantitative Accuracy for Single Compounds and Simple Mixtures Few Interferences by Nonaromatics Spectral Data Available	Unspecific (Compared to IR and Luminescence) Extensive Sample Preparation Quantitation may be Affected by Solvent, Polarity, or Medium, Chemical Complexation	Moderate Sensitivity ppm - ppb in Favorable Cases	Portable - Hand-held Colorimeter - Colorimetric Kits Field Deployable Instrumentation with Multichannel Detectors HPLC Detectors	UV-VIS Techniques - FT - Derivative LT Matrix Isolation Reflectance Photoacoustic Spectroscopy Fiber Optic Colorimetric Sensors Multichannel Detectors - Diode Arrays - CCDs
		Infrared (Dispersive)			
Organic and Inorganic Determination of Specific Functional Groups	Highly Specific Structural Data on Group Frequencies Mature Technique Instrumentation Widely Available Spectral Libraries Available	Mid/low Sensitivity Water is Interferent Requires Special Optics/Solvents Quantitation Difficulties Week Optical Sources and Detectors	Less Sensitive than UV-vis Absorbance Much Less Sensitive than Fluorescence ppthousand to ppm in Favorable Cases	Portable and Field Instruments Available Portable Unit with Gas Cell Quantitation of Grease and Oil ATR Attachments for Solids, Oils	FTIR GC/LC-FTIR
		Near Infrared			
Single Compounds Simple Matrices Organics Overtones	Sources and Optical Materials Better than Mid-IR Optically Good Sensor Materials Can Distinguish Major Components of Simple Matrix Fewer Interferences than Mid-IR	Less Spectral Structure than Mid-IR - Overtone Overlap - Less Specificity - Interpretation Complicated Not Useful for Complex Matrices Signal Processing and Pattern Recognition Required	Low Sensitivity 10-1 ppthousand	Portable Near-IR Instrument with Fiber Optic Probe Characterization of Oil Bulk Chemical Analysis	Surface/Pollutant Interaction Studies Near IR Sensors Process Control

Definitions of portable, field deployable, and semi-field deployable as used in this table are:

Portable:	Field Deployable:	Semi-field Deployable:
Battery powered	Generator powered	Can fit in mobile lab
One person can carry	Compact, two people can lift (several instruments in mobile lab)	Complex or fragile instrument
Little sample prep. (< 10 min.)	Relatively simple sample prep. (< 1 hr.)	Often considerable sample prep. (> 1 hr.)
Instrument cost < $30,000	Instrument cost $30,000 to $100,000	Instrument cost > $100,000
Analysis cost < $30	Analysis cost $30 - $200	Analysis cost > $200

Definitions of abbreviations as used in this table are:

ATR	Attenuated Total Reflectance	PAC	Polyaromatic Compounds
CARS	Coherent Anti-Stokes Raman Spectroscopy	PAH	Polyaromatic Hydrocarbons
CCD	Charge-Coupled Device	PCB	Polychlorinated Biphenyls
FTIR	Fourier Transform-Infrared Spectroscopy	ppb/ppm	part per billion/part per million (mg/mL, µg/mL)
GC	Gas Chromatography	RTP	Room Temperature Phosphorescence
HPLC	High Performance Liquid Chromatography	SERS	Surface-Enhanced Raman Spectroscopy
IR	Infrared Spectroscopy	SFC	Supercritical Fluid Chromatography
LC	Liquid Chromatography	TLC	Thin-Layer Chromatography
LT	Low Temperature	UV-vis	Ultraviolet-Visible Spectroscopy
NRS	Normal Raman Spectroscopy		

Source: Eastwood and Vo-Dinh (1991)

10.4.4 Other Spectroscopic Techniques

Other Names Used to Describe Method: Infrared (IR) spectroscopy, high resolution/long range Fourier transform infrared (FTIR) spectroscopy; Light detection and ranging spectroscopy (LIDAR), including differential scattering LIDAR (DISC) and differential absorption LIDAR (DIAL); IR reflectance/transmission spectroscopy; Raman spectroscopy (RS), (surface enhanced raman scattering (SERS).

Uses at Contaminated Sites: **FTIR:** Remote monitoring of air contaminants.

Method Description: **IR spectroscopy:** A field-deployable long-path Fourier transform infrared (FTIR) spectrometer currently is being tested by EPA. The instrument measures the absorption caused by infrared-active molecules. Pollutant inorganic and organic gas concentrations are determined by setting up a retroflector up to 1 kilometer from the spectrometer and transmitting an infrared beam that is returned to the detector (Figure 10.4.4a). Analysis is performed by using a reference spectrum of known concentration and least square fitting routines. The instrument measures various airborne vapors, including both organic and inorganic compounds. Figure 10.4.4b illustrates four applications of IR spectroscopy using differential scattering and absorption LIDAR, techniques that are being tested by the U.S. Army. **RS** encompasses a variety of techniques that involve detection and analysis of the scattering of radiation. Raman techniques differs from IR spectroscopy by using visible light to obtain structurally unique vibrational and rotational spectra. In the laboratory, RS can be used to identify functional groups to determine mineral phases. **SERS** is a relatively new analytical technique in which a sorptive surface provides a signal enhancement of up to a million times compared conventional IR spectroscopy, thus greatly reducing the detection limit. **Reflectance/transmission spectroscopy** in the near and far infrared portion of the electromagnetic spectrum has been proposed for airborne remote sensing identification of surface spills of benzene, toluene, TCE, and gasoline, but has not been field tested. Table 10.4.4 provides additional information about FTIR, normal RS, surface enhanced spectroscopy, and resonance raman methods.

Method Selection Considerations: **Long-Path FTIR Advantages:** (1) Measurements are rapid (a few minutes), allowing temporal profiles of pollutant gas concentrations; and (2) a range of volumes can be sampled by changing the distance between the instrument and the retroflector. **Long-Path FTIR Disadvantages:** Instrumentation is still in developmental stages. **RS Advantages:** (1) Is the best complement to IR spectrometry (Section 10.4.3) because it is able to discern vibrations from functional groups that are not discernible in the IR spectra; (2) resolution allows observation of particles as small as 1 micron, allowing characterization of individual particles; and (3) when combined with high pressure liquid chromotography (Section 10.5.3), can be used with solid and liquid samples to test for nearly all substances on EPA's priority pollutant list, including semivolatiles. **RS Disadvantages:** (1) Is nondefinitive and qualitative (only identifies functional groups); (2) data interpretation is complex; and (3) instrument availability is limited.

Frequency of Use: Uncommon.

Standard Methods/Guidelines: --

Sources for Additional Information: Eastwood and Vo-Dinh (1991), Thompson et al. (1989-IR and Raman Spectroscopy), U.S. EPA (1991b, 1992-portable FTIR). See also, Table 10-5.

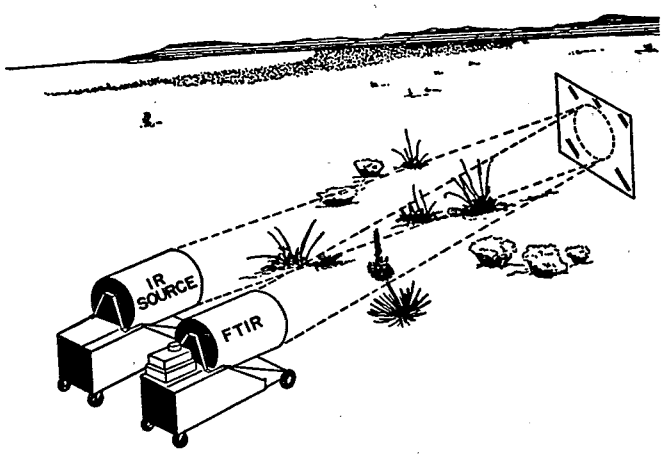

(a)

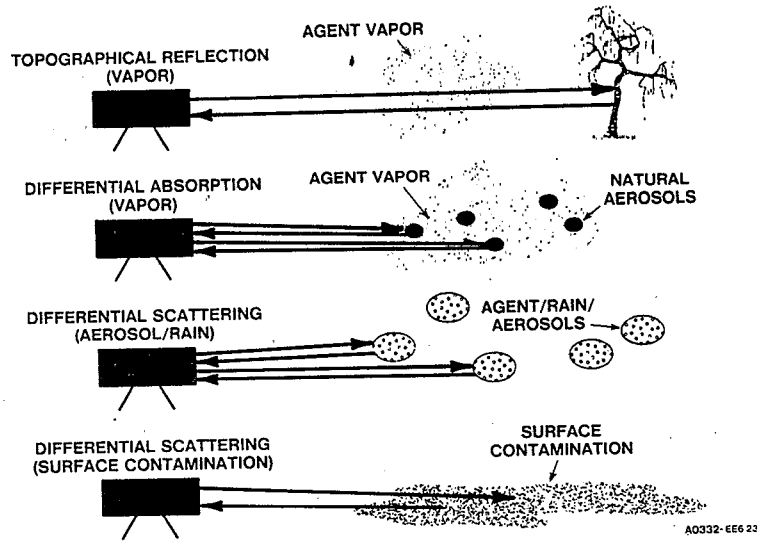

(b)

Figure 10.4.4 Several infrared spectroscopic techniques: (a) Schematic of an infrared radiation source, mirror, and FTIR spectrometer equipped with telescopes to allow long-path analysis (Moore et al., 1991); (b) Four applications of differential scattering and absorption Lidar (Mackay, 1991).

Table 10.4.4 General Characteristics of Fourier Transform Infrared, and Raman Spectroscopic Techniques for Field Analysis (See end of Table 10.4.3 for definitions and abbreviations)

Applicability	*Advantages*	*Limitations*	*Sensitivity*	*Current Field Applicability*	*Related Lab Techniques & Sensors*
		Infrared (Fourier Transform)			
Organic and Inorganic *Determination of Specific Functional Groups* *Routinely Used for Real-Time GC and Vapor Analysis*	*Highly Specific Structural Data on Group Frequencies* *Instrumentation Widely Available* *Real-Time Flow through Vapor Applications* *- GC-FTIR* *Spectral Libraries Available*	*Less Sensitive than Luminescence* *Requires Special Optics/Solvents* *Can Tolerate Some Water (Background Subtraction)* *Organics Detection 1-10 ppthousand in Water*	*More Sensitive than Dispersive IR* *- Signal Averaging* *ppm to subppm in Favorable Cases*	*Field and Semi-field Deployable* *- With or Without GC* *- Volatiles/Semivolatiles* *Adaptable to Use with SFC*	*GC/LC-FTIR* *Matrix Isolation* *- LT for Sensitivity* *Microscopy*
		Normal Raman Spectroscopy (NRS)			
Organic and Inorganic *Aqueous Solutions* *Biological Matrices* *Polymers*	*Specific as IR for Structural Information* *Different Selection Rules - Complements IR* *Fewer Interferences than IR in vis or near-IR Regions* *Water and Glass not Interferences* *Good Optics and Solvents Available* *Can Handle Unusual Sample Shapes/Sizes*	*Fluorescence Interference in UV-vis* *Requires Laser Source* *Relatively Complex Instrumentation* *Requires Skilled Operator* *Not as Mature as IR* *Relatively Poor Limits of Detection*	*Moderate Sensitivity 1000 - 20 ppm*	*Semi-field Deployable Instruments under Development*	*Research in:* *- Aqueous Solutions* *- Biological Matrices* *- Polymers* *Special Raman Techniques* *- SERS* *- Resonance* *- CARS* *- Microprobes* *- Microscopy* *LT Applications*
		Surface Enhanced Raman Spectroscopy (SERS)			
Many Pollutants *Demonstrated for:* *- Pyridine* *- Hydrazine* *- PAHs* *- Pesticides*	*Specific in Structural Information* *More Sensitive than Normal Raman* *As Sensitive as Luminescence in Favorable Cases* *No Interference by Water* *(See Also NRS)*	*Relatively New Tech.* *Surface/Substrate Material Dependent* *Reproducibility* *Requires Laser and Special Substrate* *Not all Analytes Enhanced Equally* *Few Spectral Libraries* *(See Also NRS)*	*Good Sensitivity for Selected Analytes* *ppm - ppb in Favorable Cases*	*Field Deployable Instrumentation under Development*	*Research to Optimize Techniques* *Microscopy* *Microprobes* *Surface Studies* *Fiber-Optic Sensors* *HPLC (under Development)* *Multichannel Detectors*
		Resonance Raman			
PACs Absorbing in UV *Phenols*	*Specific in Structure* *May Eliminate Fluorescence Background* *(See Also NRS)*	*Only Chromophore Vibrations Enhanced* *Limited to UV Absorbing Compounds* *- Mainly PACs* *Quantitation Difficult* *Not Comparable to Other Raman Techniques* *UV Laser Source* *Complex Instrumentation* *(See Also NRS)*	*Fair Sensitivity in Favorable Cases with Chromophore Vibrations*	*Many Practical Difficulties*	*Chromophore Characterization* *Biological Application*

Source: Eastwood and Vo-Dinh (1991)

10.5 WET CHEMISTRY ANALYTICAL TECHNIQUES

10.5.1 Colorimetric Techniques/Kits

Other Names Used to Describe Method: Colorimetry (various field kits using colorimeters/filter photometers/spectrophotometers [see Section 10.4.3]), titrimetry.

Uses at Contaminated Sites: **Hach kits:** Analyzing Al, Cd, Cr, Co, Cu, Fe, Pb, Mn, Ni, N, P, Ag, and Zn; **Hanby kits:** Analyzing petroleum hydrocarbons, PAHs; **Other kits:** Analyzing explosive (TNT/RDX), PCBs, chlorinated organics. Many ground-water tracers can be analyzed using colorimetric techniques.

Method Description: **Titrimetry** is a wet chemistry procedure by which a solution of known concentration (a standard solution) is added to a water sample or soil-solute extract with an unknown concentration of the analyte of interest until the chemical reaction between the two solutions is complete (the equivalence point of titration). Titrimetry requires an abrupt change in some property of the solution at the equivalence point, which is typically indicated by a change in color produced by an added dye, or by monitoring changes in pH with a meter (electrometric titrations). **Colorimetry** also involves mixing of reagents of known concentrations with a test solution, but in specified amounts that result in chemical reactions in which the absorption of radiant energy (color of the solution) is a function of the concentration of the analyte of interest. At the simplest level, concentrations can be estimated with visual comparators. **Filter photometers** can be used for many routine methods that do not involve complex spectra, and precise work is done with **spectrophotometers** (see Section 10.4.3). Titrimetric and colorimetric techniques are well suited for development of wet chemistry field test kits, and such kits are available commercially for many inorganic and some organic compounds. Figure 10.5.1 shows sample instructions for chromium using a Hach test kit. HNU/Hanby test kits use reagents that can be used in the field without use of a digester. Spectrochem has developed a kit that detects major classes of chemicals in water (chlorinated hydrocarbons, carbamates, and organic phosphated insecticides).

Method Selection Considerations: **Titrimetry and Colorimetry Advantages:** (1) Procedures are relatively simple and amenable to the development of field test kits for many analytes; (2) best suited for preliminary screening where only a few contaminants or analytes are of concern or interest; and (3) field test kits are available for most heavy metals. **Titrimetry and Colorimetry Disadvantages:** (1) Are time consuming if a large number of samples must be analyzed; (2) each analyte of interest requires different reagents and test procedures making analysis of multiple analytes time consuming; (3) strict QA/QC procedures are more difficult to follow in the field using test kits; and (4) availability of colorimetric field test kits for specific toxic organics is still relatively limited.

Frequency of Use: Colorimetric techniques are commonly used for field analysis of nutrients in soil and in ground-water tracer studies. Use of colorimetric field test kits for field screening of contaminants is a relatively new and promising field screening technique.

Standard Methods/Guidelines: --

Sources for Additional Information: Davis et al. (1985-colorimetry, titrimetry), Fishman and Friedman (1989-colorimetry, titrimetry), U.S. EPA (1987).

CHROMIUM, TOTAL

1,5-Diphenylcarbohydrazide Method — **Method 8023**

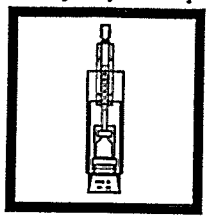

1. Select the sample amount from tables below and digest according to procedure in Section II.

Note: If sample cannot be analyzed shortly after sampling, see Section IV for storage and preservation information.

Note: This is an EPA-approved method only if preceded by an EPA-approved nitric acid digestion. The Digesdahl digestion procedure is not EPA approved and cannot be used for permit reporting purposes. (See digestion information on page 22.)

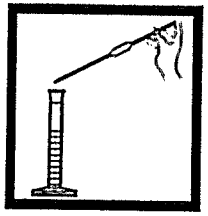

2. Use analysis volume in the tables below that corresponds to the sample amount selected in Step 1. Pipet analysis volume into a 25-ml mixing graduated cylinder. If aliquot is more than 0.5 ml, pH adjust according to the last step in the digestion procedure in Section II. Dilute to the 25-ml mark with deionized water, if necessary. Pour contents of cylinder into a 25-ml sample cell.

Note: For proof of accuracy, use a 0.25 mg/l chromium standard solution (preparation given in the Accuracy Check) in place of the sample.

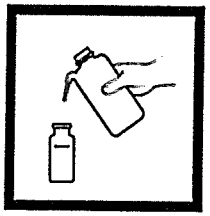

3. Fill a second 25-ml sample cell with deionized water to the 25-ml mark (the reagent blank).

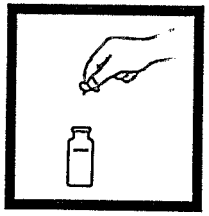

4. Add the contents of one Chromium 1 Reagent Powder Pillow to each cell. Swirl to mix.

LIQUID SAMPLES

Expected Conc. Chromium (mg/l)	Sample Amount (ml)	Analysis Volume (ml)
0.05–2.0	40.0	20.0
0.20–8	20.0	10.0
0.75–33	10.0	5.00
7.5–330	5.00	1.00
75–3300	1.00	0.500

OIL SAMPLES

Expected Conc. Chromium (mg/kg)	Sample Amount (g)	Analysis Volume (ml)
8–330	0.25	20
20–820	0.20	10
50–2200	0.15	5
350–16000	0.10	1

SOLID SAMPLES

Expected Conc. Chromium (mg/kg)	Sample Amount (g)	Analysis Volume (ml)
4.0–165	0.500	20.0
10–410	0.400	10.0
25–1100	0.300	5.00
190–8200	0.200	1.00
750–33000	0.100	0.500

CHROMIUM, continued

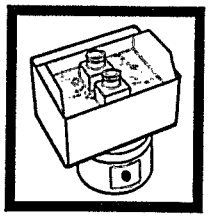

5. Place cells in a boiling water bath and wait for 5 minutes.

Note: If a precipitate forms while heating, add a second Chromium 1 Reagent Powder Pillow and continue heating.

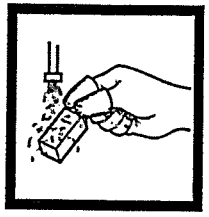

6. Remove cells from the water bath and cool to 25 °C under tap water. If necessary, add deionized water to the 25-ml mark of the sample cell.

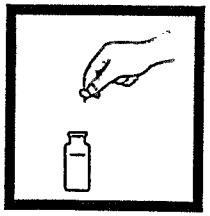

7. Add contents of one Chromium 2 Reagent Powder Pillow to each cell. Swirl to mix.

Note: Add the contents of a second Chromium 2 Reagent Powder Pillow if a second Chromium 1 Reagent Powder Pillow was added in Step 5.

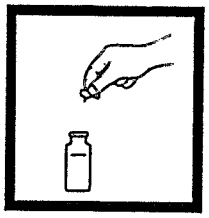

8. Add the contents of one Acid Reagent Powder Pillow to each cell. Swirl to mix.

Note: Test results will not be affected if a small portion of this reagent does not dissolve. Add contents of a second Acid Reagent Powder Pillow if a second Chromium 1 Reagent Powder Pillow was added in Step 5.

9. Add contents of one ChromaVer 3 Chromium Reagent Powder Pillow to each cell. Swirl to mix.

Note: A purple color will develop if chromium is present.

The Pour-Thru Cell can be used.

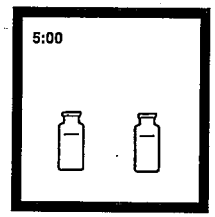

10. Wait 5 minutes for the color to develop.

Note: Do not wait more than 20 minutes before completing Steps 11 to 12.

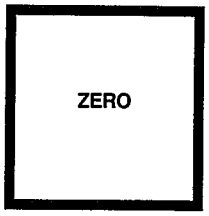

11. Zero instrument with reagent blank using settings below. Read the mg/l chromium of other cell.

DR/3000
Program No. 13
Wavelength 540 nm

DR/2000
Program No. 100
Wavelength 540 nm

DR/700
Module No. 55.01
Wavelength 550 nm

Note: See Section I for information on instrument standardization.

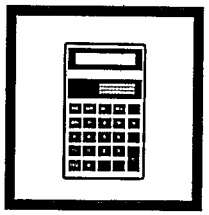

12. Calculate the total chromium (Cr) concentration of the sample using the following formula:

$$\text{total mg/l Cr} = \frac{A \times 2500}{B \times C}$$

WHERE
A = mg/l read, Step 11
B = ml (g) sample amount, Step 1
C = ml analysis volume, Step 2

Note: For solid and oil samples express the resulting concentration as mg/kg and not as mg/l.

Figure 10.5.1 Sample instructions for Hach Kit test procedures (Chromium); footnote under step 1 indicates modification required for EPA approval (Hach Company, 1991).

10.5.2 Immunochemical Techniques

Other Names Used to Describe Method: Enzyme immunoassay (EIA), enzyme linked immunosorbent assay (ELISA), radioimmunoassay (RIA), fluoroimmunoassay.

Uses at Contaminated Sites: **EIA:** Analyzing BTX (benzene, toluene, xylene), PCB, PCP (water, soil), cocaine, heroin, and pesticides.

Method Description: **EIA** techniques that involve the use of antibody reagents that react with the analyte of interest to produce reactions that can be analyzed colorimetrically are a recent development for trace organic analysis (see Section 10.5.1 for additional discussion of methods for colorimetric analysis). Figure 10.5.2 shows procedures for an EIA test for pentachlorophenol (PCP). Other types of immunoassay techniques include radioimmunoassay and fluoroimmunoassay. (See also, discussion of bioassays in Section 10.6.6.)

Method Selection Considerations: **EIA Advantages:** (1) Is the best suited technique for preliminary screening where only a few contaminants or analytes are of concern or interest; (2) EIA test kits are very simple, rapid (minutes), and inexpensive; and (3) have the potential for specific field tests for a large number of toxic organics with very low detection limits (ppb). **EIA Disadvantages:** (1) Is time consuming if a large number of samples must be analyzed; (2) each analyte of interest requires different reagents and test procedures making analysis of multiple analytes time consuming; (3) strict QA/QC procedures are more difficult to follow in the field using test kits; and (4) availability of kits for specific toxic organics is relatively limited at this time.

Frequency of Use: Enzyme immunoassays are a relatively new technique and have excellent potential for more extensive use in the future.

Standard Methods/Guidelines: --

Sources for Additional Information: U.S. EPA (1988b-immunoassays/FM-D4, 1991b, 1992). See also, Table 10-5.

NOTE: All components should be at room temperature.

1. Open foil package and remove test module, color development tube, and wash tube. (Just before use.)

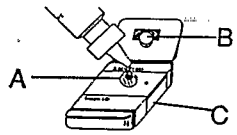

2. Sample application: Remove red cap from sample bottle and apply 10 drops (±5 drops) to the sample well of the module.

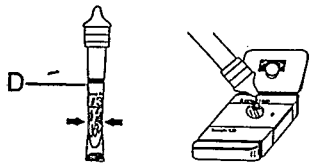

3. Wash application: Twist tab off wash tube and squeeze entire contents into sample well.

4. Color development tube application: Hold tube upright and squeeze tube where indicated to crush ampule inside. Shake vigorously for 10 seconds.

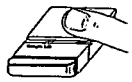

- Carefully apply ONE DROP of color development solution to sample well.
- Incubate for 1-2 minutes.

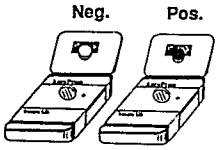

5. After incubation, press module closed for 2-3 seconds. Release and open. (Press only once.)

6. Open the module and monitor color development. Record the result at 5 minutes.

A POSITIVE RESULT WILL SHOW A GREEN COLOR AS DARK OR DARKER THAN THE REFERENCE COLOR.
A NEGATIVE RESULT WILL REMAIN WHITE OR BE LIGHTER THAN THE REFERENCE COLOR.

Figure 10.5.2 Procedures for enzyme immunoassay test for PCPs: (A) Antibody disks, (B) read-out disks, (C) absorbent blotting reservoir, (D) crush vial containing lyophilized antibody (DuQuette et al., 1991).

10.5.3 Liquid Chromatography

Other Names Used to Describe Method: High pressure/performance liquid chromatography (HPLC), thin-layer chromatography (TLC), ion (exchange) chromatography.

Uses at Contaminated Sites: **HPLC:** Analyzing PAHs and phenols; **TLC:** Analyzing nitrogen-containing aromatics; **Ion chromatography:** EPA Method 300.0 (Kopp and McKee, 1983) covers the following ions: Cl, F, nitrate-N, nitrite-N, orthophosphate-P, and sulfate; also can be used to analyze halide and fluorinated organic acid dyes in tracer studies.

Method Description: **Liquid chromatography** is a type of chromatography where the mobile liquid phase containing analytes of interest is injected into a stationary phase that is either liquid or solid. Numerous specific techniques, such as partition, adsorption, ion exchange, paper, and TLC, have been developed. **Ion chromatography** involves separation of ions (typically anions) on a column of ion exchange resin, which are detected conductimetrically (Figure 10.5.3). A **TLC** technique with potential for separation of nitrogen-containing compounds in the field has been developed. A field operable **HPLC** unit using UV/visible and fluorescence detectors (see Section 10.4.2) appears to be the best field screening technique for PAHs (see advantages below).

Method Selection Considerations: In general, liquid chromatography is able to detect more compounds than GC, but at generally higher detection limits. **Ion Chromatography Advantages:** (1) Is a well established technique for separation of both organic and inorganic species; (2) several ions can be measured in a single aqueous sample; (3) eliminates many of the interferences associated with other techniques, and is capable differentiating species of the same ion in some cases; and (4) sensitive and has a wider range of applicability so that accurate measurement can be made on samples containing moderate to substantial ionic concentrations. **Ion Chromatography Disadvantages:** (1) Very high concentrations of an ion relative to another ion of interest might interfere or preclude measurement of the ion present in lower concentrations; and (2) individual measurements have a relatively low dynamic range, so separate dilutions might be required to bring a sample concentration into the optimum analytical range. **HPLC (for PAHs) Advantages:** (1) Instrumentation requires fewer gases for field analyses; (2) use of in-series UV/visible and fluorescence detectors provides real-time confirmation of target analytes; (3) larger sample volumes can be injected compared to GC, yielding lower method quantitation limits; and (4) provides better resolution (ppb) than GC for comparable analysis time. **HPLC (for PAHs) Disadvantages:** New method for which there has been relatively little actual field experience.

Frequency of Use: Ion chromatography is commonly used for laboratory analysis of major anions. Field application of other liquid chromatographic techniques is a new development that appears promising for specific applications, such as detection of PAHs (HPLC) and nitrogen-containing and other polynuclear aromatic compounds (TLC).

Standard Methods/Guidelines: --

Sources for Additional Information: Davis et al. (1985), Fishman and Friedman (1989), Hassett (1982-high-pressure liquid chromatography), Thompson et al. (1989-ion chromatography). See also, Table 10-5.

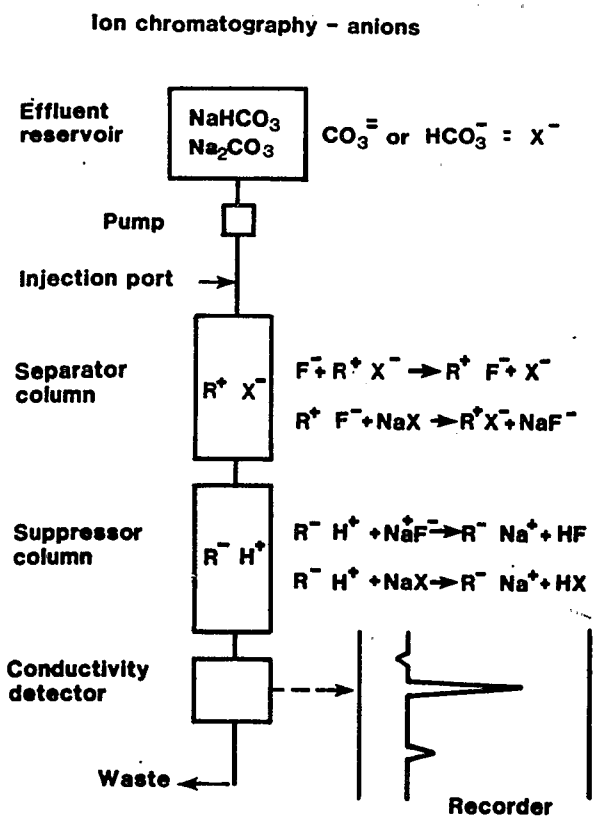

Figure 10.5.3 Ion chromatography system for anions (Fishman and Friedman, 1989).

10.5 WET CHEMISTRY ANALYTICAL TECHNIQUES

10.5.4 Electrochemical Techniques

Other Names Used to Describe Method: Coulometry, voltammetry, polarography. **Techniques covered elsewhere:** pH, Eh, DO, electrical conductance (Section 10.1); ion-selective electrodes (see Section 5.5.5); potentiometric/amperometric/conductometric electrochemical sensors (see Section 10.6.5).

Uses at Contaminated Sites: **Coulometry:** Detecting ionic tracers. **Voltammetry/polarography:** Determining if trace metals, ions, and organics are in soils, waters, and sediments.

Method Description: **Coulometric** methods of analysis measure the quantity of electricity (in coulombs, the amount of electricity flowing during the passage of a constant current of 1 ampere for 1 second) required to carry out a chemical reaction. Primary coulometric analysis involves direct reactions by oxidation or reduction at the proper electrode. Secondary coulometric analysis involves indirect reactions between the solution and a primary reactant produced at one of the electrodes. **Voltammetry** is the area of electroanalytical chemistry involved in measuring the current at an electrode as a function of potential or voltage. Numerous specific techniques have been developed and only a very general description is provided here. **Polarography** is a voltammetric method in which a dropping mercury electrode (DME), is used for very precise control of changes in currents applied to the electrode. Plots of current vs. potential allow identification of the analyte based on the shape of the curve and concentration based on wave height. **Stripping voltammetry** is a two-step process in which electrolytic deposition of the chemical species is followed by application of a voltage scan to cause electrolytic dissolution (stripping) of the species back into solution at characteristic potentials.

Method Selection Considerations: **Coulometric Advantages:** (1) Instrumentation is relatively simple; and (2) well suited for trace analysis of ionic tracers, such as chloride and bromide (see Section 4.3.1). **Coulometric Disadvantages:** Is not well suited for analysis of complex mixtures. **Polarography Advantages:** (1) Instrumentation is relatively simple; (2) depending on specific method, capable of sensitivity to sub-ppm; (3) good selectivity allows determination of many constituents without prior chemical separation; and (4) capable of measuring large ranges of concentration, ranging from concentrated extracts from solids to dilute natural waters. **Polarography Disadvantages:** Method is not likely to be useful for field or mobile laboratory. **Stripping Voltammetry Advantages:** (1) Is a relatively simple method requiring minimal sample preparation; and (2) is the most sensitive electroanalytical technique currently available (capable of metals analyses down to ppt level). **Stripping Voltammetry Disadvantages:** (1) Method is not likely to be useful for field or mobile laboratory; and (2) highest sensitivities are difficult to achieve for routine analysis.

Frequency of Use: Measurement of pH, Eh, and specific conductance (Section 10.1) are the most commonly used electrochemical techniques. Polarography and stripping voltammetry are not likely to be useful in field or mobile laboratory applications.

Standard Methods/Guidelines: --

Sources for Additional Information: Davis et al. (1985-coulometry), Fishman and Friedman (1989-voltammetry/polarography), Street and Peterson (1982-polarography and stripping voltammetry).

10.6 OTHER ANALYTICAL TECHNIQUES

10.6.1 Radiological Techniques

Other Names Used to Describe Method: **Analytical techniques:** X-ray diffraction (XRD), proton induced X-ray emission (PIXE), glancing incidence X-ray analysis (GIXA), (instrumental) neutron activation analysis([I])NAA); **Techniques covered elsewhere:** Nuclear borehole techniques (Section 3.3), radioisotope single-borehole tracer methods (3.5.4), radioisotope tracers (Section 4.4.5), X-ray fluorescence (Section 10.4.1), and electron microprobe analysis (Section 10.6.4).

Uses at Contaminated Sites: Detecting natural radioisotopes (i.e., gamma log, Section 3.3.1); performing elemental and mineralogical analysis (XRD, PIXE, INNA, gamma spectrometry, electron microprobe analysis, XRF); performing tracer studies (see Sections cited above).

Method Description: **XRD** involves the identification of minerals by directing a monochromatic x-ray beam at a powdered sample and using a scintillation, proportional, or geiger counter (see above) to detect the intensities and diffraction angles as the beam is rotated around the sample. Crystalline minerals can be identified by the characteristic position and intensities of the diffraction peaks. **PIXE** analysis uses a high-speed proton beam to displace inner-shell electrons of the sample elements. When the electrons return to their proper shells, x-rays are emitted that have energies characteristic of the elements and proportional to their mass. Computer processing provides data on all elements present in a given sample. In **INNA**, powdered samples are irradiated for specified times and neutron fluxes, depending on the elements of interest. Gamma-ray spectra of the irradiated samples are measured with Ge(Li) detectors coupled with multi-channel analyzers.

Method Selection Considerations: All radiological analytical methods have the disadvantage of requiring special health and safety precautions. **XRD Advantages:** (1) Is a relatively simple and inexpensive bulk sample method; (2) provides simultaneous multi-mineral characterization; and (3) is best used in conjunction with other more quantitative species-specific chemical methods. **XRD Disadvantages:** (1) Estimates of mineral percentages are only semi-quantitative; and (2) minerals present in small amounts often are difficult to discern in multicomponent mixtures. **PIXE Advantages:** (1) Provides simultaneous multi-element characterization; (2) is rapid (30 minutes/sample); and (3) is good for initial screening to identify presence of elements for which more precise analysis should be done. **PIXE Disadvantages:** (1) Instrumentation is expensive (but somewhat cheaper than ICP-AES); and (2) has relatively high detection limits (10s to 100s ppm). **INAA Advantages:** (1) Requires less sample preparation time compared to AAS and ICP-AES; and (2) sensitivity compares well with conventional spectrometric techniques for many elements. **INAA Disadvantages:** (1) Requires nuclear reactor for irradiation of samples; (2) sensitivity is highly dependent on the exact elements being measured and on the sample matrix; and (3) some elements, such as lead, cannot be measured.

Frequency of Use: **Analytical techniques:** XRD is a widely used method for mineral identification. PIXE and INAA are commonly used for analysis of coal fly ashes, but have received limited use for contaminated site characterization. All three methods are primarily laboratory methods, although XRD instrumentation probably could be used in a mobile laboratory. See neutron activation log (Section 3.3.5) and neutron-lifetime log (Section 3.3.6) for field applications using principles of neutron activation analysis.

Standard Methods/Guidelines: **Analysis of radioactive substances:** Thatcher et al. (1977); **XRD of soil samples:** ASTM (1985).

Sources for Additional Information: **Analytical techniques:** Davis et al. (1985-gamma, beta, NAA), Helmke (1986-neutron activation analysis), Thompson et al. (1989-INNA, PIXE, XRD), Whittig and Allardice (1986-XRD), Wong and Carlsen (1991-tritium field screening).

10.6 OTHER ANALYTICAL TECHNIQUES

10.6.2 Gravimetric/Volumetric Techniques

Other Names Used to Describe Method: --

Uses at Contaminated Sites: Characterizing particle size distribution; measuring bulk density; measuring dissolved/suspended solids; calculating contaminant concentrations/flux; measuring water flow during pumping tests (Section 4.2); measuring soil gravimetric moisture (Section 6.3.1).

Method Description: **Gravimetric** techniques involve measuring the mass of the material of interest. For chemical analyses, a mechanical or electronic analytical balance capable of measuring the mass of an object within 0.1 to 0.01 mg is used. Field applications require less sensitive devices, such as a hanging spring scale with a canvas sling or pail for weighing coarse fragments, and a scale or balance with 0.1 gram accuracy for weighing soil samples for field tests (Boulding, 1991). **Volumetric** techniques involve the measurement of volume. Volume of **liquid** samples for chemical analysis is easily measured by the use of graduated cylinders or sample containers of a known volume. For borehole aquifer characterization, volume is measured using flowmeters (Section 3.5.3), and in pumping tests, pumping rate can be determined in several ways: (1) Observing the time required to fill a container of known volume, (2) use of commercial water meters, (3) use of a circular orifice weir (Figure 10.6.2), or (4) channeling surface flow from the pump through flumes or weirs. For **gases**, volume typically is measured by using syringes of a known volume, or measuring the rate of gas flow through a tube of known diameter. Both gravimetric and volumetric measurements are required for soil characterization because the soils vary in **bulk density** (weight per unit volume), depending on the volume of pore space. There are four major methods for measuring bulk density: (1) The **core** method, which involves drying and weighing of an undisturbed core sample of known volume; (2) **gamma-gamma** logging (see Section 3.3.2); (3) the **excavation** method, which involves excavating an amount of soil (which is dried and weighed) and measuring the volume of sand required to fill the hole, or the volume of water required to fill a rubber-balloon; and (4) the **clod** method makes use of Archimedes' principle, and involves coating a clod of known weight with a water-repellent substance and weighing it first in air, then again while immersed in a liquid of known density.

Method Selection Considerations: A scale or balance of the required accuracy (see above) should be standard equipment for field investigations for soil characterization. Selection of appropriate volumetric measurement techniques for water and gases is straightforward. **Bulk density** is required for most vadose zone models (see Appendix C), and allows qualitative evaluation of the potential for transport of contaminants through the vadose zone. The **core** method is simple and accurate, but generally unsatisfactory in stony or very dry soils. Advantages and disadvantages of **gamma-gamma** logging are covered in Section 3.3.2. The **excavation** method is a simple and accurate field procedure, but lacks discrimination of localized horizons and is limited to around 12 centimeters below the surface. The **clod** method allows discrimination of localized horizons, but is more complex and usually gives higher bulk density values than other methods because interclod spaces are not taken into account. The core, excavation and clod methods can be used in the field provided an oven for drying and accurate scales for weighing samples are available (Section 6.3.1), and have the advantage of providing moisture content of the sample as well as bulk density.

Frequency of Use: Gravimetric and volumetric measurements are essential for the uses described above. The core method is probably the most commonly used method for measuring bulk density, followed by gamma-gamma logging.

Standard Methods/Guidelines: **Gravimetric:** Fishman and Friedman (1989). **Soil bulk density:** ASTM (1984-rubber balloon method), Blake and Hartge (1986), Campbell (1991), Flint and Childs (1984).

Sources for Additional Information: **Flow discharge measurement:** Johnson (1964), Jorgensen (1969).

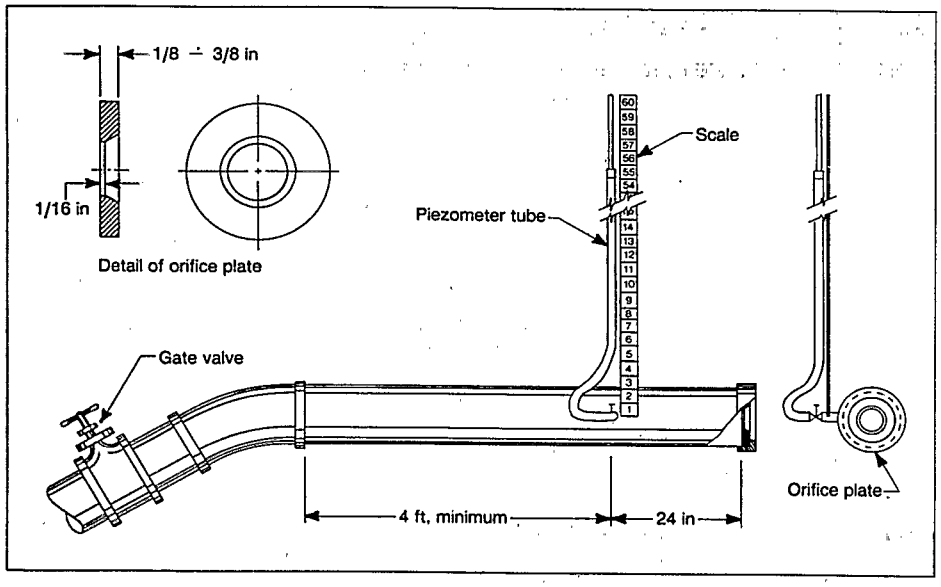

Figure 10.6.2 Volumetric techniques: Construction diagram of a circular orifice weir commonly used for measuring pumping rates of a high-capacity pump (Driscoll, 1986, by permission).

10.6 OTHER ANALYTICAL TECHNIQUES

10.6.3 Magnetic Methods

Other Names Used to Describe Method: Magnetic susceptibility (MGS), electron spin resonance (ESR), nuclear magnetic resonance (NMR).

Uses at Contaminated Sites: **MGS:** Performing qualitative soil mineral characterization; detecting lateral changes in soil characteristics; **ESR:** Characterizing clay minerals and sorption of metals; **NMR:** Characterizing clay minerals and soil organic matter; borehole logging and soil moisture monitoring (see Sections 3.2.4 and 6.2.5).

Method Description: **MGS** is the tendency of atoms or ions in a sample to become aligned when placed in a magnetic field, and is obtained by measuring the magnetic moment per unit volume or mass induced in a sample by an applied magnetic field. The Gouy (Figure 10.6.3a) and Faraday (Figure 10.6.3b) susceptibility balances are two commonly used types. **ESR** measures the electron magnetic moment in solid, water, or air samples. The instrument consists of an electromagnet inducing a continuous magnetic field that can be varied in strength, a resonance cavity where the sample is positioned, a microwave source, and a detector that measures the sorption response of the sample (Figure 10.6.3c). **NMR** operates on the same principle as ESR, except that the nuclear magnetic moment (carbon or proton spectra) is measured instead of the electron magnetic moment. Figure 10.6.3d shows a NMR spectrometer using a radio frequency transmitter and receiver/detector that records proton or carbon spectra in response to variations in magnetic field. See also, section 3.2.4 for application of NMR as a borehole logging technique and for soil moisture monitoring.

Method Selection Considerations: **MGS Advantages:** Instrumentation and measurement procedures are relatively simple. **MGS Disadvantages:** Provides qualitative rather than quantitative information on mineralogy. **ESR/NMR Advantages:** (1) Are more amenable to quantitative interpretation than MGS; and (2) are well suited for controlled laboratory study of contaminant-soil interactions. **ESR/NMR Disadvantages:** (1) Are not well suited for the chemical characterization of complex soil chemistry; and (2) instrumentation is generally too bulky for use in mobile laboratories.

Frequency of Use: Laboratory applications for study of soil mineralogy and organic matter are relatively recent, but are becoming more widely used. Use for contaminated site characterization has been limited.

Standard Methods/Guidelines: McBride (1986).

Sources for Additional Information: **MGS:** Fine et al. (1992), Mullins (1977), Williams and Cooper (1990), Woolcock and Zafar (1992); **NMR:** Bleam (1991), Thorn (1987). See also, references for Section 3.2.4 and 6.2.5.

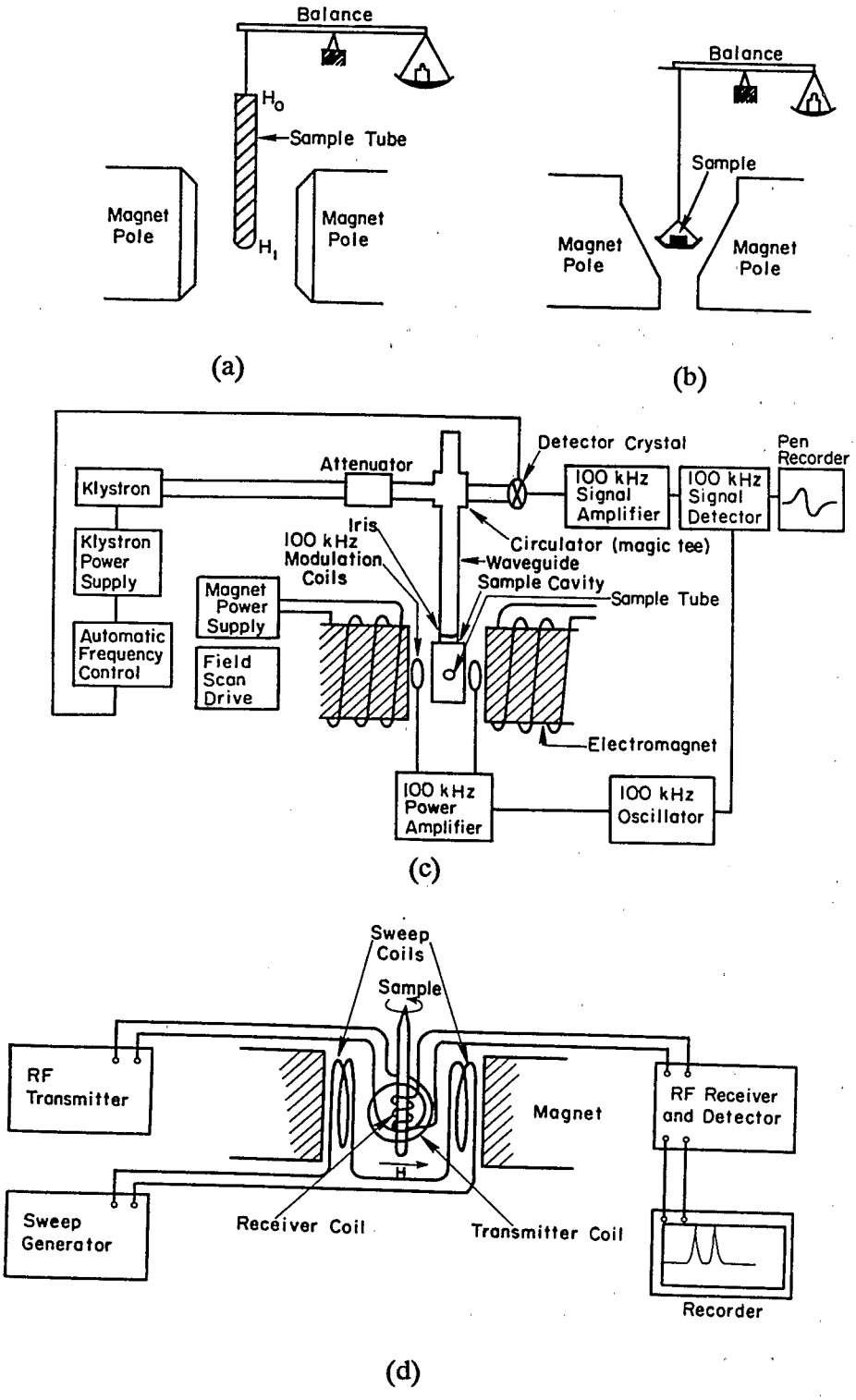

Figure 10.6.3 Magnetic methods: (a) Gouy magnetic susceptibility balances; (b) Faraday magnetic susceptibility balance; (c) Diagram of typical X-band ESR spectrometer; (d) Diagram of NMR spectrometer (McBride, 1986, by permission).

10.6 OTHER ANALYTICAL TECHNIQUES

10.6.4 Microscopic Techniques

Other Names Used to Describe Method: Optical microscopy, scanning electron microscopy (SEM), electron microprobe analysis (EMPA).

Uses at Contaminated Sites: **Optical microscopy:** Observating soil morphologic features; identification of coarse-grained minerals. **SEM and EMPA:** Assessing morphology, composition, and identity of minerals.

Method Description: Microscopic techniques involve the visual identification and characterization of soil/solid waste morphologic features and minerals with instruments ranging from magnification of up to 20 times, using a simple hand lens, to magnifications of 50,000 times using an electron microscope. As magnification increases, resolution increases, but the area viewed decreases (Figure 10.6.4a). **Optical microscopy:** Stereoscopic microscopes can be used in the field for more detailed visual inspection of soil morphologic features at magnifications of 20 to 80 times. **Petrographic** microscopes for mineral identification require the preparation of thin sections by impregnating samples with epoxy resin and grinding the samples to a precise thickness. The thin sections are examined with magnifications ranging from 50 to 400 times. Minerals are distinguished by their color in polarized and nonpolarized light, refractive index, and crystal morphology. **SEM** involves the irradiation of a sample with a focused electron beam with very short wavelengths (about 100,000 times shorter than that for visible light) that can provide high image resolution. Secondary electrons emitted from the sample produce a topographical image of the sample, and backscattered electrons provide some qualitative information on elemental composition. **EMPA** is similar to SEM, except that the electron beam also produces X-ray fluorescence (see Section 10.4.1), which allows for quantitative interpretation of elemental concentration as well as topographic images (Figure 10.6.4b).

Method Selection Considerations: **Optical Microscopy Advantages:** (1) Is a simple, nondestructive technique that allows mineral identification without intermediate calculations or inferences; (2) sample preparation and examination are relatively quick, simple, and inexpensive; and (3) use of stereoscopic microscopes in field (5 to 6 inches working distance, 20 to 80 power) allows for observation of soil features that cannot be readily seen by eye or with a hand lens. **Optical Microscopy Disadvantages:** (1) Preparation of thin sections for accurate identification of minerals is not readily done in the field; (2) accurate mineral identification requires an experienced and skilled observer; and (3) identification of fine-grained material can be very difficult and might require other methods, such as X-ray diffraction (Section 10.6.1). **SEM Advantages:** (1) Has very high resolution (magnification from 20 to 50,000 times; and (2) can differentiate heterogeneity among fine-grained particles as well as heterogeneity within individual particles. **SEM Disadvantages:** (1) Equipment is nonportable and expensive; and (2) elemental information and topographic image interpretation is largely qualitative. **EMPA Advantages:** Able to produce images that depict elemental distribution; **EMPA Disadvantages:** (1) Analyses are expensive and relatively few instruments are available; (2) quantitative results for most elements are limited to concentrations of 50 to 100 ppm; and (3) has lower resolution than SEM (up to 2500 times).

Frequency of Use: **Optical microscopy** and **SEM** are commonly used in the laboratory for mineral identification and characterization. Hand lenses are standard equipment for observation of soils in the field; use of optical microscopes in the field is uncommon, but more widespread use for examination of soils would be beneficial. **EMPA** is most commonly used in the field of metallurgy, but could be used more widely in soil and waste studies if limitations of expense and limited instrument availability were reduced.

Standard Methods/Guidelines: --

Sources for Additional Information: Cady et al. (1986-optical microscope), Goldstein et al. (1981), Sawhney (1986-electron microprobe), Thompson et al. (1989-Chapter 16).

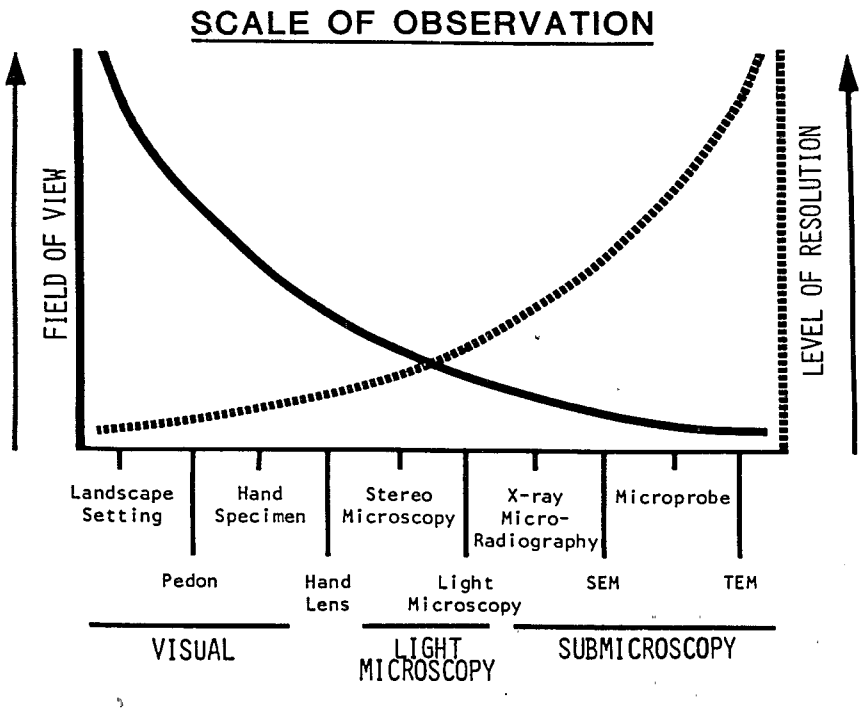

(a)

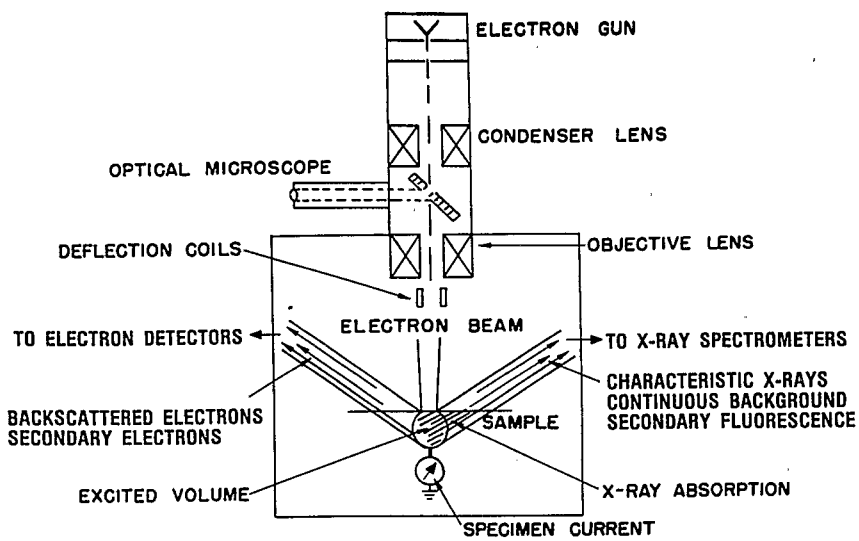

(b)

Figure 10.6.4 Microscopy: (a) Schematic illustration of the relationship between increasing levels of resolution and the area of the field under view (Cady et al., 1986, by permission); (b) Schematic diagram showing components of an electron microprobe and the signal produced from a specimen surface irradiated with an electron beam (Sawhney, 1986, by permission).

10.6.5 Other Chemical Sensors

Other Names Used to Describe Method: Electrochemical sensors (amperometric/galvanic cell sensors, semiconductor sensors, spectroelectrochemical sensors), piezoelectric sensors (piezoelectric quartz microbalance, surface acoustic wave [SAW] sensor).

Uses at Contaminated Sites: Field screening of contaminants in air, soil, and ground-water samples; **SAW:** Screening for toxic/organophosphorus gases; **Semiconductor:** Screening for organochlorine; **Pyrolysis-EC:** Screening for alcohols, epoxide, formaldehyde, CO, and H2S.

Method Description: **Electrochemical sensors:** As the name implies, these sensors measure an electrochemical response when the sensor comes in contact with the analyte(s) of interest. **Amperometric** gas sensors are the best developed sensor of this type (see Section 10.3.2). These sensors typically consist of electrodes in contact with an electrolyte-saturated insulator. Selective membranes allow the gas of interest to enter the insulator and redox reactions on the sensing-electrode surface generate a current that is proportional to the analyte concentration. Figure 10.6.5 illustrates an exploded view of a typical amperometric sensor. Amperometric sensors are capable of detecting levels as low as ppb of many organic and inorganic air pollutants. Use of amperometric sensors for detecting contaminants in ground water is in developmental stages at this time. **Semiconductor** sensors are designed to respond electrically to the substance of interest. A semiconductor sensor designed to detect low concentrations of chlorinated and brominated organic compounds in vapor and water (using membrane extraction [see Section 10.2.5]) has recently been tested in the laboratory. **Piezoelectric sensors:** Several types of sensors using piezoelectric materials, which develop an electrical response to changes in pressure, have been developed. Typically, oscillating crystals are used as sensitive gravimetric detectors. Selective coatings allow specific organic solvent vapors to be sorbed on the crystal. The changed mass of the crystal resulting from sorption changes the frequency of oscillation, which can be correlated with concentration. **SAW sensors** also use piezoelectric materials and coatings that selectively sorb the vapor or gas of interest. Changes in the mass or mechanical modulus of the surface coating are measured by the change in velocity of electrically generated Rayleigh (surface) waves, as measured by travel time from the source of receiving electrodes in the sensor. Concentration with SAW sensors is related to changes in velocity.

Method Selection Considerations: **Amperometric Sensor Advantages:** (1) Is inexpensive; (2) is simple and reliable (no moving parts and sensor output is usually a linear function of concentration); and (3) is portable (units with sensor, electronics, battery, and readout device can easily fit in a shirt pocket). **Amperometric Sensor Disadvantages:** (1) Separate sensor required for each compound of interest; and (2) applications for ground-water monitoring are in early developmental stages. **Piezoelectric and SAW Sensor Advantages:** (1) Are portable; and (2) SAW vapor sensors have higher sensitivity than gravimetric piezoelectric sensors. **Piezoelectric and SAW Sensor Disadvantages:** (1) General difficulty in developing selective coatings that are not affected by complex mixtures; and (2) separate sensor required for each compound of interest.

Frequency of Use: **Amperometric sensors:** Commonly used in ambient air quality monitoring. **Other sensors:** Emerging technology area.

Standard Methods/Guidelines: --

Sources for Additional Information: See Table 10-5.

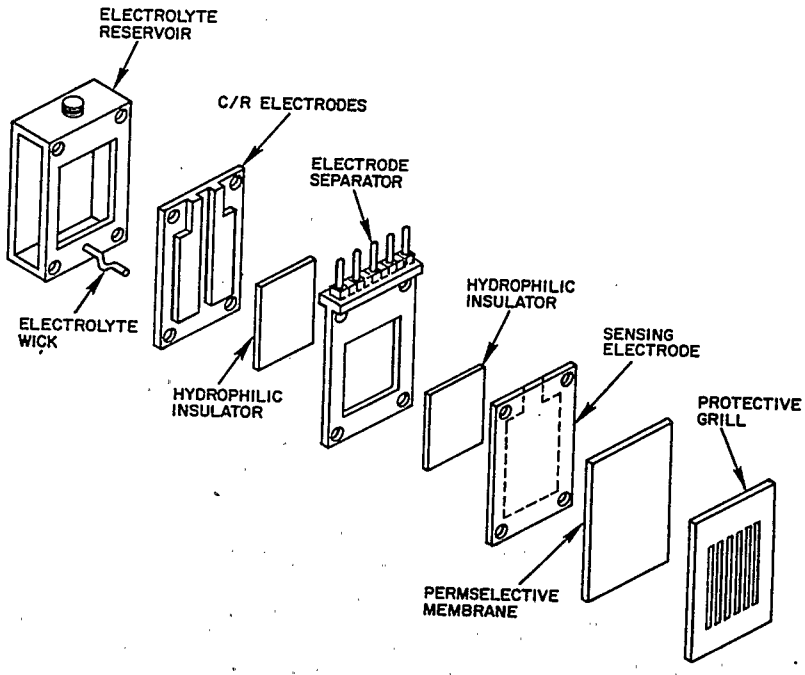

Figure 10.6.5 Parts of a typical amperometric sensor (Schmidt et al., 1988).

10.6.6 Other Biological Techniques

Other Names Used to Describe Method: **Field:** Short term field bioassessments, biomonitoring, laser/microbe bioassay (LMB), immunochemical techniques (Section 10.5.2). **Laboratory:** Bioassays, toxicity tests, biomarkers.

Uses at Contaminated Sites: Assessing actual or potential biological impacts of contamination at a site; monitoring the effect of effluent on organisms; assessing the treatability of contaminated soil or ground-water for bioremediation.

Method Description: At the simplest level, a qualitative assessment of the presence or absence of contaminants at a site can be made by observing whether any vegetation appears to have been killed or growth inhibited by the presence of toxic contaminants. **Short-term field bioassessments:** Field screening studies include collection of small mammals, fish, benthic invertebrates, and plants for the purpose of evaluating alterations in community structure, population dynamics, bioaccumulation of toxicants, and histopathology. The **LMB** system is a recently developed technique that has potential for use in the field. Nineteen isogenic strains of Bacillus subtilis are used to characterize and quantify the toxicants present in an aqueous solution. The response of the bacteria to toxic substances in the solution is monitored by differential light scattering from a laser beam. The different strains respond differently to different toxicants and a computer analyzes the measured responses to the known response profiles to identify the type and concentration of toxicant. Figure 10.6.6 shows an example of the use of mussels for **field biomonitoring** of the effects of potentially toxic effluents. A series of field cages filled with mussels are placed along a gradient of contaminant concentrations. After a period of time (usually 7 to 30 days) the mussels are retrieved and taken to a laboratory for further testing and analysis. Numerous **laboratory** methods have been developed for biological assessment of toxicity, many of which can be run in mobile laboratories (see below). These can be broadly classified as: (1) **Toxicity** tests using specific aquatic and terrestrial organisms and/or microorganisms to measure biological response to specific contaminants or mixes of contaminants; and (2) the analysis of **biomarkers**, which are molecular biological indicators that can directly link specific chemicals or classes of chemicals to observed biological effects. The **microtox** bioassay, a colorimetric technique (see Section 10.5.1) that uses microorganisms, has been used to determine the appropriate range of waste application loading for soil-based waste treatment systems (see reference in Table 10-5).

Method Selection Considerations: **General Advantages:** (1) Qualitative observations of inhibition of vegetative growth can very easily be made; and (2) more sophisticated field bioassessment methods allow for correlation of contaminant levels to actual biological impacts. **General Disadvantages:** (1) Field techniques have not been widely used at contaminated sites so procedures are not well established; (2) personnel with specialized training are required; and (3) equipment for more sophisticated techniques might not be readily available. **LMB Advantages:** (1) Equipment is field portable and relatively fast (around 1 hour for a single sample); (2) can distinguish between substances with cytotoxic and genotoxic properties; (3) potential for both high sensitivity and high specificity for numerous toxic chemicals and chemical classes; and (4) computer processing and output speeds up and simplifies interpretation of results. **LMB Disadvantages:** (1) Is a new technique that has received limited field testing; and (2) ability to distinguish compounds in real-world complex mixtures has not yet been demonstrated.

Frequency of Use: EPA's Environmental Research Laboratories at Duluth, Minnesota, and Narragansett, Rhode Island, have mobile laboratories set up for ambient and effluent toxicity testing, which have been used primarily as part of NPDES programs. Use of short-term field bioassessment methods at contaminated sites has been fairly limited in the past, but these methods are being used with increasing frequency.

Standard Methods/Guidelines: Britton and Greeson (1989-algal growth potential bioassay). U.S. EPA (1986a) contains recommendations for use of bioassays for evaluation of hazardous waste land treatment demonstrations.

Sources for Additional Information: U.S. EPA (1987-Section 12.6), Warren-Hicks et al. (1989). See Table 10-5 for additional references.

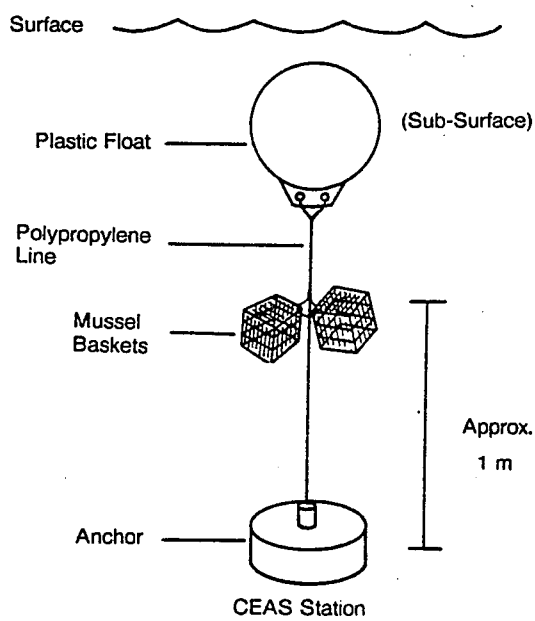

Figure 10.6.6 Mussel field cages used to transplant mussels along transects (DiBona et al., 1989).

Table 10-4 Reference Index for General Approaches to Field Screening/Analytical Methods and Extraction Procedures

Topic	References
General Approaches to Field Screening	
Symposia	U.S. DOE (1988), U.S. EPA (1988a, 1991a)
Review Reports/Papers	Chudyk (1989), Coffey et al. (1988), Eastwood and Vo-Dinh (1991), Jenkins et al. (1988, 1989), Koglin and Poziomek (1990), Montgomery et al. (1985), National Institute for Petroleum and Energy Research (1990), Poziomek and Koglin (1991), Remata et al. (1990), U.S. EPA (1982, 1987, 1988a, 1991b)
Agency Research Programs	U.S. EPA: Chapman and Fredericks (1988-FASP), Fribush and Fisk (1991), Transue et al. (1991-FASP), Tuttle and Chapman (1989), U.S. EPA (1992); Other: Cornell (1991-New Jersey), Frank et al. (1991-DOE), Mackay (1991-U.S. Army), Madden and Johnson (1992-U.S. Army)
QA/QC	Mackiewicz (1990, 1991), Poziomek and Koglin (1991-cite 8 references from U.S. EPA, 1991, that are not included here)
Sample Extraction Procedures	
Headspace Analysis	Crockett and DeHaan (1991-soil VOCs), Golding et al. (1991-VOCs in soil/water), Hewitt et al. (1991), Ho et al. (1988), Hogan (1991), Holbrook (1987), Pankow (1986, 1991), Roe et al. (1989), Sims et al. (1991-soil), Spittler et al. (1988-soil, 1991-water), Stuart et al. (1991-BTEX in soil/water), Wylie (1988)
Soil Vacuum Extraction	Golding et al. (1991), Spittler (1991)
Purge and Trap	Chochran and Henson (1988), Hein (1988), Liebman et al. (1991), Linenberg and Robinson (1991), Sherman et al. (1988a-concentrator purge & trap), Turner et al. (1991), Wise et al. (1991a), Wylie (1988); P/CCW: Pankow (1991), Pankow and Rosen (1988)
Thermal Treatment	Microwave-Assisted Digestion: Grohse et al. (1988); Thermal Desorption: Pankow and Isabelle (1982), Pankow and Kristensen (1983), Pankow et al. (1988), Robbins et al. (1990), Schlesing et al. (1991), Vandegrift (1988), Wise et al. (1991b); Thermal Extraction/Pyran Thermal Chromatograph: Greenlaw et al. (1989), Henry et al. (1988), Junk et al. (1991a,b), Overton et al. (1988a,b); XRF Sample Preparation: Bernick et al. (1991), Harding (1991), Ramsey et al. (1991)
Soil (Micro)extraction	Semivolatile Organics: Kasper et al. (1991), Transue et al. (1991); PCB extraction: Keller and Ganapathi (1991), Twomey et al. (1990); Tritium: Wong and Carlsen (1991)
Other Methods	Supercritical Fluid Extraction: Liebman et al. (1991), Lopez-Avila et al. (1991), Schulten and Schnitzer (1991), Wright and Fruchter (1992); Membrane extraction: Melcher and Morabito (1991); Extraction Disks: Poziomek et al. (1991)

Table 10-5 Reference Index for Screening/Analytical Methods

Topic	References
Total/Specific Vapor Detectors	Comparisons: Clay and Spittler (1982), Gervasio and Davis (1989), Robbins et al. (1990), Smith and Jensen (1987), Spittler (1980, 1991); Explosimeter: Aller (1984), Robbins et al. (1990); Flame Ionization Detector: Gervasio and Davis (1989), Hein (1988), Robbins et al. (1990); Organic Vapor Analyzer: Barber and Braids (1982), Glaccum et al. (1983), Hogan (1991), Jermakian and Majika (1988), Robbins et al. (1989); Photoionization Detector: Brose and Gross (1988), Gervasio and Davis (1988), Hare (1987), Robbins et al. (1990); P/T Argon Ionization Detector: Linenberg and Robinson (1991); Unspecified: Stetter et al. (1984); Mercury Vapor Analyzer: Brass et al. (1991)
Portable Gas Chromatograph	GC Comparisons/Validation: Homsher et al. (1988), Spittler (1991); Gas Chromatographs: Baker et al. (1991-GC/FID), Berkely (1991-GC/PID), Buchmiller (1989), Carney et al. (1991-retention indices), Clay and Spittler (1982), Crockett and DeHaan (1991), Fowler and Bennett (1987), Golding et al. (1991-GC/FID), Hewitt et al. (1991), Ho et al. (1988), Kaelin and Prichett (1991-GC/argon ionization detector), Keller and Ganapathi (1991), Linenberg (1988), Moore (1991-GC/PID), Moreton et al. (1991-soil BTEX), Overton et al. (1988c), Quimby et al. (1982-GC/OVA), Reynolds et al. (1991), Robbat and Xyrafas (1988a), Shangraw (1988), Sherman et al. (1988b), Spittler (1980, 1984-PCBs), Spittler et al. (1982-GC/FID), Stuart et al. (1991-GC/PID), Turner et al. (1991-PT/GC), Wander et al. (1988), Wohltjen et al. (1991); GC/AES: Szelewski and Wilson (1988); GC/FTIR: Gurka et al. (1986)
Fieldable/Mobile Mass Spectrometer; GC/MS	GC/MS: Bruell and Hoag (1984), Gurka et al. (1986), McGinnis and Hafferty (1987-PCP), Moy (1989-PCB), Sinha (1991), Transue et al. (1991-GC/ECD, PAHs, PCP); Mobile Mass Spectrometer: Duret et al. (1991), Hadka and Dickinson (1988), Klainer et al. (1991), Trainor and Laukien (1988); GC/ITMS or ITD (Ion Trap Mobility Spectrometry or Ion Trap Detector): Cispar et al. (1991), Cooks et al. (1991), Leibman et al. (1991), McClennen et al. (1991-MINIMASS), Wise et al. (1991a, 1991b); Tandem MS (MS/MS): Wise et al. (1991a); GC/MS: Meuzelaar et al. (1991), Robbat and Xyferas (1988b); Thermal Desorption ITMS-MS/MS: Wise et al. (1991b), Thermal Desorption GC/MS: Robbat et al. (1991); Semivolatile Thermal Extraction GC/MS: Henry et al. (1988), Junk et al. (1991a,b), Overton et al. (1988d)
Mobile Laboratories	Ben-Hur et al. (1984-mobile MS/MS), Burger (1991), Chapman et al. (1986), Engels et al. (1984), Franks et al. (1985), Greenlaw et al. (1989-thermal chromatograph/MS), McGinnis and Hafferty (1987-PCP), Moy (1989-PCB), Tuttle and Chapman (1989); Cost Analysis: Ganapathi et al. (1988); Dedicated Laboratory: Freeman and Karmazyn (1988)
Ion Mobility Spectrometry (Plasma Chromatography)	Bell and Eiceman (1991-GC/IMS), Burroughs et al. (1991), Clement et al. (1992), Davis (1991-data analysis), Hoffland and Shoff (1991), Reategui et al. (1988), Richter (1991), Snyder et al. (1991-microorganisms), Wise et al. (1990)

Table 10-5 (cont.)

Topic	References
Fluorescence/Luminescence/Spectroscopic Techniques	
X-Ray Fluorescence (XRF)	Ashe et al. (1991), Barich et al. (1988), Bernick et al. (1991), Carlson and Alexander (1991-QA/QC), Chappell et al. (1986), Coetzee et al. (1986-XRF, ICP-AES), Cole et al. (1991-XRF/CLP comparison), Everitt et al. (1988), Florkowski et al. (1971), Freiburg et al. (1987-XRF, AAS, AES), Furst et al. (1985), Gabry (1991-XRF vs CLP), Glanzman (1988), Grupp et al. (1988), Harding (1991-EDXRF), Harding and Walsh (1990-EDXRF), Jenkins (1984), Kendall (1991b), Meiri et al. (1990), Perlis and Chapin (1988), Piorek and Rhodes (1988-calibration), Raab et al. (1990), Ramsey et al. (1991-EDXRF calibration), Sackman et al. (1988), Smith and Lloyd (1986-XRF, AAS), Watson et al. (1989)
UV Fluorescence	PAH Solvent Extract: Popp (1989), Saenz et al. (1991), Theis et al. (1991); With HPLC: Mann and Vickers (1988), Riddell et al. (1991); With Fiber Optics: Chudyk et al. (1988), Gillispie and St. Germain (1988), Haas et al. (1988, 1991), Kenny et al. (1988), Lieberman et al. (1991), Smith et al. (1988), Taylor et al. (1991); UV Surface Contamination Detector: Richter (1991); Airborne: Guenneberg (1978)
Other Luminescence Methods	Synchronous Fluorescence: Gammage et al. (1988, 1991); Spectrofluorometer/Solid State Fluorescence: Poziomek et al. (1991); Room Temperature Phosphorescence: Vo-Dinh (1984), Vo-Dinh et al. (1991)
IR Spectroscopic Methods	Review: Kendall (1991a), Phelps and DeSha (1991-LIDAR, FTIR); LIDAR: Mackay (1991); Mobile FTIR: Fateley et al. (1990), U.S. EPA (1991a-five papers, not indexed separately); Other Infrared: Gurka et al. (1986-GC/FTIR), Kasper et al. (1991-soil hydrocarbons), Richter (1991-IR laser absorption); IR Reflectance/Transmission: King and Clark (1988)
Other Spectroscopy	Ultraviolet-Visible Absorption Spectroscopy: Beemster and Schlager (1991-with fiber optics), Schlager and Beemster (1991), Thompson (1974); UV Derivative Spectroscopy: Hager and Jones (1990-BTEX); Surface Enhanced Raman Spectroscopy: Carrabba et al. (1988, 1991), Ferrell et al. (1988), Smith et al. (1988)
Wet Chemistry Analytical Techniques/Instrumentation	
Immunochemical Methods	Reports/Symposia: Schnell and Chang (1990), Silverstein et al. (1992a, 1992b), Van Emmon and Mumma (1990), Vanderlaan et al. (1991); Field Enzyme Immunoassay Test Kits: Bushway et al. (1988), Chamerlik-Cooper et al. (1991-PCBs), Duquette et al. (1988, 1991-PCP), Ensys Inc. (1991), Harrison and Ferguson (1990), Ladouceur (1991), McMahon et al. (1988), Schmidt et al. (1988), Vanderlaan et al. (1988), Van Emon et al. (1991a-pesticies, 1991b-PCP kits); Immunochemical Fiber Optic Sensors: Bolts et al. (1988), Lin et al. (1988)

Table 10-5 (cont.)

Topic	References
Wet Chemistry Analytical Techniques/Instrumentation (cont.)	
Colorimetric Chemical Field Test Kits	PCB: Gabry (1987), Woolerton et al. (1988); Other: Hanby (1988-aromatic compounds), Jenkins et al. (1991-explosives), Lindsay and Baedecker (1988-aqueous sulfide), Schlesing et al. (1991-chlorinated organics), Silvestri et al. (1981), Stamnes et al. (1991-Cr Hach kit)
Liquid Chromatography	Thin-Layer Chromatography: Brumley and Brownrigg (1991-PNAs), Silvestri et al. (1981); High Performance Liquid Chromatography: Betowski and Jones (1989), Ekambaram and Burch (1988-PAHs), Joseph (1992), Mann and Vickers (1988), Pace et al. (1992), Riddell et al. (1991-PAHs)
Bioassessment Techniques	
Bioassays	Brown et al. (1984), Easterly et al. (1988), Felkner et al. (1988a,b-laser/microbe bioassay); Microtox Assay: Abbott and Sims (1989-PAHs), Bulich (1979), Matthews and Bulich (1984), Symons and Sims (1988)
Bioassessments/Monitoring	Bohman et al. (1989), Charters (1988), Dermer et al. (1980-biochemical indicators), DiBona et al. (1989), Gardner et al. (1989), Gezo and Brusick (1987), Piekarz (1990), Steen (1987-toxicity testing), Warren-Hicks et al. (1989-field and laboratory methods)
Other Chemical Sensors	
General	Adrian (1992), Edmonds (1981), Hollenberg and Sahn (1988-biosensors), Janata and Bezegh (1988), Wohltjen (1984)
Electrochemical Sensors	Carrabba et al. (1991-SEFOS), Penrose et al. (1991-pyrolysis-EC), Schmidt et al. (1988)
Piezoelectric Sensors	Alder and McCallum (1983), Guilbault and Jordan (1988), Hlalvay and Guilbault (1977), Mierzwinski and Witkiewicz (1989), Overton et al. (1988d)
Surface Acoustic Wave (SAW)	Ballentine and Wohltjen (1989), Ballentine et al. (1986), Bartley (1991), Elton and Houle (1991-SAW/GC), Jarvis et al. (1991), Nieuwenhuizen and Barendsz (1987)
Semiconductor	Penrose et al. (1991)

SECTION 10 REFERENCES

Abbot, C.K. and R.C. Sims. 1989. Use of Bioassays to Monitor Polycyclic Aromatic Hydrocarbon Contamination in Soil. In: Superfund '89, Hazardous Materials Control Research Institute, Silver Spring, MD, pp. 23-26.

Adrian, P. 1992. New Developments in Chemical/Gas Sensing Part II: Other Technologies. Sensors, January, pp. 34-39. [Electrochemical, semiconductor, SASW sensors; Part I (December, 1991 issue) covers tin oxide semiconducting sensors]

Alder, J.F. and J.J. McCallum. 1983. Piezoelectric Crystals for Mass and Chemical Measurement: A Review. Analyst (London) 108:1169-1189.

Aller, L. 1984. Methods for Determining the Location of Abandoned Wells. EPA/600/2-83/123 (NTIS PB84-141530). (Also published in NWWA/EPA Series, National Water Well Association, Dublin, OH, 130 pp.) [Combustible gas detectors]

American Society for Testing and Materials (ASTM). 1976. Standard Practice for Oxidation-Reduction Potential of Water. D1498-76, ASTM, Philadelphia, PA.

American Society for Testing and Materials (ASTM). 1982. Test Methods for Acidity and Alkalinity in Water. D1067-82, ASTM, Philadelphia, PA.

American Society for Testing and Materials (ASTM). 1984. Standard Test Method for Density and Unit Weight of Soil in Place by the Rubber Balloon Method. D2167-84, (Vol. 4.08), ASTM, Philadelphia, PA.

American Society for Testing and Materials (ASTM). 1985. Standard Methods for X-Ray Radiography of Soil Samples. D4452-85, (Vol. 4.08), ASTM, Philadelphia, PA.

American Society for Testing and Materials (ASTM). 1989. Test Method for pH of Soils. D4972-89, (Vol. 4.08), ASTM, Philadelphia, PA.

American Society for Testing and Materials (ASTM). 1990a. Standard Practice for Measuring the Concentration of Toxic Gases or Vapors Using Detector Tubes. D4490-90, (Vol. 11.03), ASTM, Philadelphia, PA.

American Society for Testing and Materials (ASTM). 1990b. Standard Practice for Measuring the Concentration of Toxic Gases or Vapors Using Length-of-Stain Dosimeters. D4599-90, (Vol. 11.03), ASTM, Philadelphia, PA.

American Society for Testing and Materials (ASTM). In preparation. Draft Standard Practice for the Micro-Extraction of Water for the Analysis of Volatile and Semi-Volatile Organic Compounds in Water, ASTM, Philadelphia, PA.

Ashe, J.B., P.F. Berry, G.R. Voots, M. Bernick, and G. Prince. 1991. A High Resolution Portable XRF HgI_2 Spectrometer for Field Screening of Hazardous Wastes. In: U.S. EPA (1991a), pp. 507-515.

Baker, D.E. and N.H. Suhr. 1982. Atomic Absorption and Flame Emission Spectrometry. In: Methods of Soil Analysis, Part 2, chemical and Microbiological Properties, 2nd ed, A.L. Page, R.H. Miller, and D.R. Keeney (eds.), ASA Monograph No 9. American Society of Agronomy, Madison, WI, pp. 13-27.

Baker, R.J., J.M. Fisher, N.P. Smith, S.A. Koehnlein, and A.L. Baehr. 1991. Gas-Chromatographic Analysis of Soil-Gas Samples at a Gasoline Spill (Abstract). In: U.S. EPA (1991a), pp. 599.

Ballentine, D.S. and H. Wohltjen. 1989. Surface Acoustic Wave Devices for Chemical Analysis. Analytical Chemistry 61:704A-714A.

Ballentine, D., A. Snow, M. Klusty, G. Chingas, and G. Wohltjen. 1986. UASF/NRL Surface Acoustic Wave Sensor Program. NRL Memorandum Report 5865, Naval Research Laboratory, Washington, DC, 23 pp.

Barber, A.J. and O.C. Braids. 1982. Application of a Portable Organic Vapor Analyzer in Ground-Water Contamination Investigations. In: Proc. 2nd Nat. Symp. on Aquifer Restoration and Ground Water Monitoring, National Water Well Association, Dublin, OH, pp. 129-132.

Barich, III, J.J., R.R. Jones, G.A. Raab, and J.R. Pasmore. 1988. The Application of X-Ray Fluorescence Technology in the Creation of Site Comparison Samples and in the Design of Hazardous Waste Treatability Studies. In: U.S. EPA (1988a),

pp. 75-80.

Barnes, I. 1964. Field Measurement of Alkalinity and pH. U.S. Geological Survey Water Supply Paper, 1535-H.

Bartley, D.L. 1991. Significant Physical Effects on Surface Acoustic Wave (SAW) Sensors (Abstract). In: U.S. EPA (1991a), pp. 601.

Beemster, B.J. and K. Schlager. 1991. In-Situ Ultraviolet-Visible Absorption Spectroscopy: A New Tool for Groundwater Monitoring. In: Ground Water Management 5:3-16 (5th NOAC). [Fiber optics]

Bell, S.E. and G.A. Eiceman. 1991. Hand-Held GC-Ion Mobility Spectrometry for On-Site Analysis of Complex Organic Mixtures in Air or Vapors over Waste Sites. In: U.S. EPA (1991a), pp. 153-166.

Ben-Hur, D., J.S. Smith, and M.J. Urban. 1984. Application of Mobile MS/MS to Hazardous Waste Site Investigations. In: Proc. 5th Nat. Conf. on Management of Uncontrolled Hazardous Waste Sites, Hazardous Materials Control Research Institute, Silver Spring, MD, pp. 53-58.

Berkley, R.E. 1991. Evaluation of Emission Sources and Hazardous Waste Sites Using Portable Chromatographs. In: U.S. EPA (1991a), pp. 253-263. [GC/PID]

Bernick, M., et al. 1991. An Evaluation of Field Portable XRF Soil Preparation Methods. In: U.S. EPA (1991a), pp. 603-607.

Betowski, L.D. and T.L. Jones. 1989. The Application of High Performance Liquid Chromatography/Mass Spectrometry to Environmental Analysis. EPA/600/4-89/033 (NTIS PB90-116963).

Blake, G.R. and K.H. Hartge. 1986. Bulk Density. In: Methods of Soil Analysis, Part 1, 2nd edition, A. Klute (ed.), Agronomy Monograph No. 9, American Society of Agronomy, Madison, WI, pp. 363-275.

Bleam, W.F. 1991. Soil Science Applications of Nuclear Magnetic Resonance Spectroscopy. Advances in Agronomy 46:91-155.

Bohman, V.R., C.R. Blincoe, G.C. Miller, R.L. Scholl, W.W. Sutton, and L.R. Williams. 1989. Biological Monitoring Systems for Hazardous Waste Sites (Production and Analyses of Analytical Reference Materials). EPA/600/4-89/007 (NTIS PB89-155204).

Bolts, J.M., et al. 1988. Integrated Immunochemical Systems for Environmental Monitoring. In: U.S. EPA (1988a), pp. 243-248.

Boulding, J.R. 1991. Description and Sampling of Contaminated Soils: A Field Pocket Guide. EPA/625/12-9/002, 122 pp. Available from CERI.*

Brass, B.E., L.P. Kaelin, T.H. Pritchett. 1991. Development of a Field Screening Technique for Dimethyl Mercury in Air. In: U.S. EPA (1991a), pp. 609-613.

Britton, L.J. and P.E. Greeson (eds.). 1989. Methods for Collection and Analysis of Aquatic Biological and Microbiological Samples. U.S. Geological Survey Techniques of Water Resource Investigations, TWRI 5-A4, 363 pp.

Brose, R.J. and J.T. Gross. 1988. Recognizing Petroleum Hydrocarbon Contamination in the Vadose Zone with Photoionization Detection Scanning of Field Samples. In: Proc. of the Focus Conf. on Southwestern Ground Water Issues (Albuquerque, NM), National Water Well Association, Dublin, OH, pp. 365-373.

Brown, K.W., K.C. Donnelly, and J.C. Thomas. 1984. Use of Short-Term Bioassays to Evaluate Environmental Impact of Land Treatment of Hazardous Waste. EPA/600/2-84/135 (NTIS PB84-232560), 386 pp.

Bruell, C.J. and G.E. Hoag. 1984. Capillary and Packed-Column Gas Chromatography of Gasoline Hydrocarbons and EDB. In: Proc. 1st NWWA/API Conf. on Petroleum Hydrocarbons and Organic Chemicals in Ground Water--Prevention, Detection and Restoration, National Water Well Association, Dublin, OH, pp. 234-266.

Brumley, W.C. and C.M. Brownrigg. 1991. Application of Thin-Layer Chromatography to Field Screening of Nitrogen-Containing Aromatic Compounds. In: U.S. EPA (1991a), pp. 615-618.

Buchmiller, R.C. 1989. Screening of Ground Water Samples for Volatile Organic Compounds Using a Portable Gas Chromatograph. Ground Water Monitoring Review 9(3):126-130.

Bulich, A.A. 1979. Use of Luminescent Bacteria for Determining Toxicity in Aquatic Environments. In: Aquatic Toxicology, L.L. Markings and R.A. Kimerle, (eds.), American Society for Testing and Materials, Philadelphia, PA, pp. 98-106. [Microtox assay]

Burger, R.M. 1991. Innovative Site Investigation Techniques: An Alternative Cost and Time Effective Approach. In: Ground Water Management 8:177-185 (Eastern GW Issues Focus Conf.). [Mobile lab]

Burroughs, G.E., G.A. Eiceman, and L. Garcia-Gonzales. 1991. Real-Time Detection of Aniline in Hexane by Flow Injection Ion Mobility Spectrometry. In: U.S. EPA (1991a), pp. 95-102.

Bushway, R.J., J. King, B. Perkins, W.M. Pask, and B.S. Ferguson. 1988. Determination of Chlordane in Soil by Enzyme Immunoassay. In: U.S. EPA (1988a), pp. 433-437.

Cady, J.G., L.P. Wildung, and L.R. Drees. 1986. Petrographic Microscope Techniques. In: Methods of Soil Analysis, Part 1, 2nd edition, A. Klute (ed.), Agronomy Monograph No. 9, American Society of Agronomy, Madison, WI, 185-218.

Campbell, D.J. 1991. Bulk Density. In: Soil Analysis: Physical Methods, K.A. Smith and C.E. Mullins (eds.), Marcel Dekker, New York, NY, pp. 329-366.

Carlson, C.D. and J.R. Alexander. 1991. Data Quality Assurance/Quality Control For Field X-Ray Fluorescence Spectrometry. In: U.S. EPA (1991a), pp. 525-533.

Carney, K.R., E.B. Overton, and R.L. Wong. 1991. Calculation and Use of Retention Indices for Identification of Volatile Organic Compounds with a Microchip Gas Chromatograph. In: U.S. EPA (1991a), pp. 621-623.

Carrabba, M.M., R.B. Edmonds, P.J. Marren, and R.D. Rauh. 1988. The Suitability of Surface Enhanced Raman Spectroscopy (SERS) to Fiber Optic Sensing of Aromatic Hydrocarbon Contamination in Groundwater. In: U.S. EPA (1988a), pp. 31-40.

Carrabba, M.M., R.B. Edmonds, R.D. Rauh, and J.W. Haas, III. 1991. Spectroelectrochemical Sensing of Chlorinated Hydrocarbons for Field Screening and In Situ Monitoring Applications. In: U.S. EPA (1991a), pp. 67-72. [Fiber optic, carbon tetrachloride, DCE, chloroform, TCE]

Chamerlik-Cooper, M., R.E. Carlson, and R.O. Harrison. 1991. Determination of PCB's by Enzyme Immunoassay. In: U.S. EPA (1991a), pp. 625-628.

Chapman, G.H. and S. Fredericks. 1988. The U.S. EPA Field Analytical Screening Project (FASP). In: U.S. EPA (1988a), pp. 375-377.

Chapman, G.C., P. Clay, C.K. Bradley, and S. Fredericks. 1986. Field Methods and Mobile Laboratory Scenarios for Screening and Analysis at Hazardous Waste Sites. In: Proc. 7th Nat. Conf. on Management of Uncontrolled Hazardous Waste Sites, Hazardous Materials Control Research Institute, Silver Spring, MD, pp. 120-125.

Chappell, R.W., A.O. Davis, and R.L. Olsen. 1986. Portable X-Ray Fluorescence as a Screening Tool for Analysis of Heavy Metals in Soils and Mine Wastes. In: Proc. 7th Nat. Conf. on Management of Uncontrolled Hazardous Waste Sites, Hazardous Materials Control Research Institute, Silver Spring, MD, pp. 115-119.

Charters, D.W. 1988. Utilization of Short-Term Bioassessments and Biomonitoring at Superfund Sites. In: Proc. U.S. EPA (1988a), pp. 359.

Chochran, J.W. and J.M. Henson. 1988. Analysis of Volatile Organic Chemicals in Aqueous Samples by Purge/GC with Selective Water Removal. J. High Res. Chrom. and Chrom. Comm. 11(12):869-873.

Chudyk, W. 1989. Field Screening of Hazardous Wastes. Environ. Sci. Technol. 23:504-507.

Chudyk, W., K. Pohlig, N. Rico, and G. Johnson. 1988. Field Screening for Aromatic Organics Using Laser-Induced Fluorescence and Fiber Optics. In: U.S. EPA (1988a), pp. 99-104.

Cispar, M.E., J.E. Alarid, P.H. Hemberger, and E.P. Vanderveer. 1991. Field Measurement of Volatile Organic Compounds by Ion Trap Mass Spectrometry. In: U.S. EPA (1991a), pp. 351-365. [GC/ITMS]

Clay, P.F. and T.M. Spittler. 1982. The Use of Portable Instruments in Hazardous Waste Site Investigations. In: Proc. 3rd Nat.

Conf. on Management of Uncontrolled Hazardous Waste Sites, Hazardous Materials Control Research Institute, Silver Spring, MD, pp. 40-44.

Clement, R.E., K.W.M. Siu, and H.H. Hill, Jr. (eds.). 1992. Instrumentation for Trace Organic Monitoring. Lewis Publishers, Chelsea, MI, 319 pp. [Five papers on ion-mobility spectrometry, other papers on MS/MS, LC/MS, GC/MS, Fourier transform IR, and SASW]

Coetzee, P.P., P. Hoffman, R. Speer, and K.H. Lieser. 1986. Comparison of Trace Element Determination in Powdered Soil and Grass Samples by Energy-Dispersive XRF and by ICP-AES. Fresenius Z Anal. Chem. 323:254-256.

Coffey, S., W. Yeager, and S. Kulkarni. 1988. The Survey of Industrial Hazard Anticipation Technology. EPA/600/4-88/041 (NTIS PB88-235536). [Review of detection methods for 34 chemicals: Colorimetric tape, continuous colorimetric, derivative/IR/Fourier spectrometry, laser system, GC/PID, MS, halide, and diffusion/electrochemical methods]

Cole, III, W.H., R.E. Enwall, G.A. Raab, C.A. Kuharic, W.H. Englemann, and L.A. Eccles. 1991. Rapid Assessment of Superfund Sites for Hazardous Materials with X-Ray Fluorescence Spectrometry. In: U.S. EPA (1991a), pp. 497-505.

Cooks, R.G., G.L. Gish, and S.A. McLuckey. 1991. Ion Trap Mass Spectrometry. Chem. Eng. News, March 25, pp. 26-41.

Cornell, F.W. 1991. Field Delineation of Soil Contamination on Hazardous Waste Sites Regulated Under New Jersey's Hazardous Waste Program. In: U.S. EPA (1991a), pp. 31-38. [Colorimetric, XRF, field GC]

Crockett, A.B. and M.S. DeHaan. 1991. Field Screening Procedures for Determining the Presence of Volatile Organic Compounds in Soil. In: U.S. EPA (1991a), pp. 383-393.

Davis, D.M. 1991. Data Analysis Techniques for Ion Mobility Spectrometry. In: U.S. EPA (1991a), pp. 113-135.

Davis, S.N., D.J. Campbell, H.W. Bentley, and T.J. Flynn. 1985. Introduction to Ground Water Tracers. EPA/600/2-85/022 (NTIS PB86-100591). (Also published under the title Ground Water Tracers in NWWA/EPA Series, National Water Well Association, Dublin, OH, 200 pp.; see also, 1986 discussion by J.F. Quinlan in Ground Water 24(2):253-259 and 24(3):396-397 and reply by S.N. Davis in Ground Water 24(3):398-399.)

Dermer, O.C., V.S. Curtis, and F.R. Leach. 1980. Biochemical Indicators of Subsurface Pollution. Ann Arbor Science Publishers, Ann Arbor, MI, 201 pp.

DiBona, P., W. Heyman, and H. Schultz. 1989. Biomonitoring for Control of Toxicity in Effluent Discharges to the Marine Environment. EPA/625/8-89/015, 58 pp. Available from CERI.*

Driscoll, F.G. 1986. Groundwater and Wells, 2nd edition. Johnson Filtration Systems Inc., St. Paul, MN, 1089 pp.

Duquette, P.H., P.E. McGuire, and M.J. Swanson. 1988. Fieldable Enzyme Immunoassay Kits for Pesticides. In: U.S. EPA (1988a), pp. 239-242.

Duquette, P.H., P.E. Guire, M.J. Swanson, M.J. Hamilton, S.J. Chudzik, and R.A. Chappa. 1991. Fieldable Enzyme Immunoassay Kits for Drugs and Environmental Chemicals. In: U.S. EPA (1991a), pp. 633-643. [PCP]

Duret, H.D., M.S. Ford, and S. Freudenberger. 1991. A Rapid Screening of Suspected Hazardous Waste-Contaminated Structures Using a Mobile Mass Spectrometer. In: Proc. 15th Annual Army Environmental R&D Symp. (1990), CETHA-TS-CR-91077, U.S. Army Toxic and Hazardous Materials Agency, Aberdeen Proving Ground, MD, pp. 127-136.

Easterly, C.E., et al. 1988. Health Hazard Evaluation of Waste Water Using Bioassays: Preliminary Concepts. EPA/600/1-88/003 (NTIS PB88-243860).

Eastwood, D. and T. Vo-Dinh. 1991. Molecular Optical Spectroscopic Techniques for Hazardous Waste Site Screening. EPA/600/4-91/011 (NTIS PB91-195990), 118 pp.

Edmonds, T.E. (ed.). 1981. Chemical Sensors. Chapman and Hall, New York, NY.

Ekambaram, V. and J.B. Burch. 1988. High-Performance Liquid Chromatograph as a Viable Field Screening Method for Hazardous Waste Site Investigations. In: U.S. EPA (1988a), pp. 361-366.

Elton, J.A. and J.F. Houle. 1991. A Rapid Response SAW-GC Chemical Monitor for Low-Level Vapor Detection. In: U.S. EPA

(1991a), pp. 649-652.

Engels, J.L., H.B. Kerfoot, D.F. Arnold, R.H. Plumb, and S. Billets. 1984. Survey of Mobile Laboratory Capabilities and Configurations. In: Proc. 5th Conf. on Management of Uncontrolled Hazardous Waste Sites, Hazardous Materials Control Research Institute, Silver Spring, MD, pp. 45-48.

Ensys, Inc. 1991. Test Kits Speed Site Assessment. Pollution Equipment News 24(5):99. [PCP EIA]

Everitt, D.A., D. Grupp, R.J. Bath, and R. Spear. 1988. The Determination of Minimum Detection Limits for Inorganic Constituents in Soil Using Transportable Secondary Target X-Ray Fluorescence. 1. Arsenic in the Presence of Lead. In: U.S. EPA (1988a), pp. 73-74.

Fateley, W.G., R.M. Hammaker, and D.F. Gurka. 1990. Field Demonstration for Mobile FT-IR for Detection of Volatile Organic Chemicals. EPA/600/4-90/008 (NTIS PB90-192014/AS).

Felkner, I.C., B. Worthy, T. Christison, C. Chaisson, J. Kurtz, and P.J. Wyatt. 1988a. Laser/Microbe Bioassay System. In: Proc. 5th Nat. Conf. on Hazardous Waste and Hazardous Materials, Hazardous Waste Research Institute, Silver Spring, MD, pp. 81-84.

Felkner, I.C., B. Worthy, T. Christison, and C.F. Chaisson. 1988b. A Microbial Bioassay Developed for Rapid Field Screening of Hazardous Waste Sites. In: U.S. EPA (1988a), pp. 253-259.

Ferrell, T.L., et al. 1988. Fiber-Optic Surface-Enhanced Raman System for Field Screening of Hazardous Compounds. In: U.S. EPA (1988a), pp. 41-42.

Fine, P., M.J. Singer, and K.L. Verosub. 1992. Use of Magnetic Susceptibility Measurements in Assessing Soil Uniformity in Chronosequence Studies. Soil Sci. Soc. Am. J. 56:1195-1199.

Finger, S.M., et al. 1988. Porous Glass Fiber Optic Sensors for Field Screening of Hazardous Waste Sites. In: U.S. EPA (1988a), pp. 127-132.

Fishman, M.J. and L.C. Friedman (eds.). 1989. Methods for Determination of Inorganic Substances in Water and Fluvial Sediments, 3rd edition. U.S. Geological Survey Techniques of Water Resources Investigations TWRI 5-A1, 545 pp.

Flint, A.L. and S. Childs. 1984. Development and Calibration of an Irregular Hole Bulk Density Samplers. Soil Sci. Soc. Am. J. 48:374-378.

Florkowski, T., B. Holynska, and J. Niewodniczanski. 1971. Feasibility of Radioisotope X-Ray Fluorescence Analysis for Measuring Water Pollution by Metals. In: Nuclear Techniques in Environmental Pollution, International Atomic Energy Agency, Vienna, pp. 335-345.

Ford, P.J., P.J. Turina, and D.E. Seely. 1984. Characterization of Hazardous Waste Sites--A Methods Manual, Vol. II: Available Sampling Methods, 2nd edition. EPA/600/4-84/076 (NTIS PB85-521596).

Fowler, B.A. and J.T. Bennett. 1987. Screening for Characterization of PCB-Containing Soils and Sediments. In: Proc. 4th Nat. Conf. on Hazardous Wastes and Hazardous Materials, Hazardous Materials Control Research Institute, Silver Spring, MD, pp. 204-207. [Portable GC]

Frank, C.W., et al. 1991. Overview of DOE's Field Screening Development Technology Activities. In: U.S. EPA (1991a), pp. 5-14.

Franks, B.J., D.F. Goerlitz, and M.J. Baedecker. 1985. Defining Extent of Contamination Using Onsite Analytical Methods. In: Proc. 2nd NWWA/API Conf. on Petroleum Hydrocarbons and Organic Chemicals in Ground Water--Prevention, Detection and Restoration, National Water Well Association, Dublin, OH, pp. 265-275. [GC, high performance liquid chromatography]

Freeman, W.W. and J. Karmazyn. 1988. Rapid Assessment of PCB Contamination at Field Site Using a Specialized Sampling, Analysis and Data Review Procedure. In: U.S. EPA (1988a), pp. 491-499. [Dedicated laboratory]

Freiburg, C., J.M. Molepo, S. Sansoni, and Z. Fresenius. 1987. Comparative Determination of Lead in Soils by X-Ray Fluorescence, Atomic Absorption Spectrometry, and Atomic Emission Spectrometry. Analytical Chemistry 59:304-308.

Fribush, H.M. and J.F. Fisk. 1991. Field Analytical Methods for Superfund. In: U.S. EPA (1991a), pp. 25-29.

Furst, G.A., V. Tillinghast, and T.S. Spittler. 1985. Screening for Metals at Hazardous Waste Sites: A Rapid Cost-Effective Techniques for Using X-Ray Fluorescence. In: Proc. 6th Nat. Conf. on Management of Uncontrolled Hazardous Waste Sites, Hazardous Materials Control Research Institute, Silver Spring, MD, pp. 93-96.

Gabry, J.C. 1987. Rapid Soil Extraction and Cleanup Procedure for PCBs. In: Superfund '87, Hazardous Materials Control Research Institute, Silver Spring, MD, pp. 104-106.

Gabry, J.C. 1991. Comparison of Mobile Laboratory XRF and CLP Split Sample Lead Results from a Superfund Site Remediation in New Jersey. In: U.S. EPA (1991a), pp. 671-672.

Gammage, R.B., J.W. Haas III, G.H. Miller, and T. Vo-Dinh. 1988. Improved Luminescence Technique for Screening Aromatic Contaminants in Environmental Samples. In: U.S. EPA (1988a), pp. 51-56. [Synchronous fluorescence]

Gammage, R.B., J.W. Haas, III, and T.M. Allen. 1991. Screening of Groundwater for Aromatics by Synchronous Fluorescence. In: U.S. EPA (1991a), pp. 673-676.

Ganapathi, G., D.S. Adler, and M. Carkhuff. 1988. Cost Analysis for Using Mobile Laboratories vs. Fixed-Base Laboratories for Site Characterization at FUSRAP Sites. In: U.S. EPA (1988a), pp. 463-467.

Gardner, H.S., W.H. van der Schalie, and R.A. Finch. 1989. On-Site Biological Monitoring and Hazard Assessment at Army Sites. In: Proc. 13th Annual Environmental Quality R&D Symp. (1988), CETHA-TE-CR-89005, U.S. Army Toxic and Hazardous Materials Agency, Aberdeen Proving Ground, MD, pp. 381-394.

Garvis, D.G. and D.H. Stuermer. 1980. A Well-Head Instrument Package for Multiparameter Measurement During Well Water Sampling. Water Research 14:1525-1527.

Gervasio, R. and N.O. Davis, Jr. 1989. Monitoring in Reduced Oxygen Atmospheres Using Portable Survey Direct Reading Instruments (PID, FID). In: Superfund '89, Hazardous Materials Control Research Institute, Silver Spring, MD, pp. 15-18.

Gezo, T.E. and D.J. Brusick. 1987. AEERL Procedures Manual: Level 1 Environmental Assessment Terrestrial Ecological Tests. EPA/600/8-86/029 (NTIS PB87-102398). [Laboratory: plant stress, ethylene, root elongation, insect toxicity tests]

Gillispie, G.D. and R. St. Germain. 1988. Wavelength Tunable Portable Laser for Remote Fluorescence Analysis. In: U.S. EPA (1988a), pp. 94-98. [UV fiber optic]

Glaccum, R., M. Noel, R. Evans, and L. McMillion. 1983. Correlation of Geophysical and Organic Vapor Analyzer Data Over a Conductive Plume Containing Volatile Organics. In: Proc. 3rd Nat. Symp. on Aquifer Restoration and Ground Water Monitoring, National Water Well Association, Dublin, OH, pp. 421-427.

Glanzman, P.K. 1988. Application of Field-Portable XRF to Hazardous Waste Characterization. In: U.S. EPA (1988a), pp. 63-70.

Golding, R.D., M. Favero, and G. Thompson. 1991. Comparison of Field Headspace versus Field Soil Gas Analysis versus Standard Method Analysis of Volatile Petroleum Hydrocarbons in Water and Soil. In: U.S. EPA (1991a), pp. 395-406.

Goldstein, J.I., D.E. Newbury, P. Echlin, D.C. Joy, C. Fiori, and E. Lifshin. 1981. Scanning Electron Microscopy and X-Ray Microanalysis. Plenum Press, New York, NY, 673 pp.

Greenlaw, P.D., et al. 1989. Field Analytical Screening of Soil for Preremedial Hazardous Waste Site Investigations by Thermal Chromatography/Mass Spectrometry. In: Superfund '89, Hazardous Materials Control Research Institute, Silver Spring, MD, pp. 41-49

Grohse, P.M., D.A. Binstock, A. Gaskill, Jr., H.M. Kingston, and C. Sellers. 1988. Evaluation of Microwave Detection Techniques to Prepare Solid and Hazardous Waste Samples for Elemental Analysis. In: U.S. EPA (1988a), pp. 411-421.

Grupp, D.J., D.A. Everitt, R.J. Bath, and R. Spear. 1988. The Use of Transportable X-Ray Fluorescence Spectrometer for On-Site Analysis of Mercury in Soils. In: U.S. EPA (1988a), pp. 71-72.

Guenneberg, F. 1978. Laser-Induced Fluorescence Techniques for Sounding of the Hydrosphere. In: Surveillance of Environmental Pollution and Resources by Electromagnetic Waves, T. Lund (ed.), Reidel, Dordrecht, Holland, pp. 283-290. [Airborne laser-fluorometer]

Guilbault, G.G. and J.M. Jordan. 1988. Analytical Uses of Piezoelectric Crystals: A Review. CRC Crit. Rev. Anal. Chem. 19:1-28.

Gurka, D.F., M.H. Hiatt, and R.L. Titus. 1986. Nontarget Compound Analysis of Hazardous Waste and Environmental Extracts by Combined FSCC/GC/FT-IR and FSCC/GC/MS. In: Hazardous and Industrial Solid Waste Testing: Fourth Symposium, ASTM STP 886, J.K. Petros, Jr., W.J. Lacy, and R.A. Conway (eds.), American Society for Testing and Materials, Philadelphia, PA, pp. 139-161.

Haas, III, J.W., E.Y. Lee, C.L. Thomas, and R.B. Gammage. 1988. Second-Derivative Ultraviolet Absorption Monitoring or Aromatic Contaminants in Groundwaters. In: U.S. EPA (1988a), pp. 105-110. [UV fiber optic]

Haas, III, J.W., T.G. Matthews, and R.B. Gammage. 1991. In Situ Detection of Toxic Aromatic Compounds in Groundwater Using Fiberoptic UV Spectroscopy. In: U.S. EPA (1991a), pp. 677-681.

Hach Company. 1991. Handbook for Waste Analysis, 2nd edition. Hach Company, Loveland, CO, 166 pp.

Hadka, M.C. and R.K. Dickinson. 1988. Rapid Screening of Organic Contaminants Using a Mobile Mass Spectrometer in the Field. In: U.S. EPA (1988a), pp. 423-432.

Hager, Jr., R.N. and V.T. Jones, III. 1990. Field Screening for BTEX in Soils, Using Ultra-Violet Derivative Spectroscopy. Ground Water Management 4:57-68 (NWWA/API Hydrocarbons Symp.).

Hanby, J.D. 1988. A New Method for the Detection and Measurement of Aromatic Compounds in Water. In: U.S. EPA (1988a), pp. 389-394. [Colorimetric test]

Harding, A.R. 1991. Low Concentration Soil Contaminant Characterization Using EDXRF Analysis. In: U.S. EPA (1991a), pp. 517-524.

Harding, A.R. and J.P. Walsh. 1990. Application of Field Mobile EDXRF Analysis to Contaminated Soil Characterization. Advances in X-Ray Analysis 33:647-654.

Hare, P.W. 1987. Use of Portable Photoionization Meter to Assess the Lateral and Vertical Distribution of Contaminants at Hazardous Waste Facilities: A Case Study. In: Proc. of the 4th Annual Eastern Regional Ground Water Conference (Burlington, VT), National Water Well Association, Dublin, OH.

Harrison, R.O. and B.S. Ferguson. 1990. Quantitative Enzyme Immunoassays of Pesticides in Water at Part Per Billion Levels. Ground Water Management 3:419-427 (7th Eastern Ground Water Issues Conf.).

Hassett, J.J. 1982. High-Pressure Liquid Chromatography. In: Methods of Soil Analysis, Part 2, Chemical and Microbiological Properties, 2nd edition, A.L. Page, R.H. Miller, and D.R. Keeney (eds.), ASA Monograph No 9, American Society of Agronomy, Madison, WI, pp. 123-131.

Hein, J.C. 1988. A Rapid "Purge-and-Transfer" Field Screening Technique for Volatile Organic Compounds in Groundwater. In: Superfund '88, Hazardous Materials Control Research Institute, Silver Spring, MD, pp. 174-176.

Helmke, P.A. 1982. Neutron Activation Analysis. In: Methods of Soil Analysis, Part 2, Chemical and Microbiological Properties, 2nd edition, A.L. Page, R.H. Miller, and D.R. Keeney (eds.), ASA Monograph No 9, American Society of Agronomy, Madison, WI, pp. 67-84.

Hem, J.D. 1985. Study and Interpretation of the Chemical Characteristics of Natural Water, 3rd edition. U.S. Geological Survey Water-Supply Paper 2254, 263 pp.

Henry, C.B., E.B. Overton, and C. Sutton. 1988. Applications of the Pyran Thermal Extractor-GC/MS for the Rapid Characterization and Monitoring of Hazardous Waste Sites. In: U.S. EPA (1988a), pp. 399-406.

Hewitt, A.D., P.H. Miyares, D.C. Leggett, and T.F. Jenkins. 1991. An Evaluation of Headspace Gas Chromatography for the Determination of Volatile Organic Compounds in Soil. In: Proc. 15th Annual Army Environmental R&D Symp. (1990), CETHA-TS-CR-91077, U.S. Army Toxic and Hazardous Materials Agency, Aberdeen Proving Ground, MD, pp. 137-142.

Hlavay, J. and G.G. Guilbault. 1977. Applications of the Piezoelectric Crystal Detector in Analytical Chemistry. Analytical Chemistry 49:1890-1898.

Ho, J.S., J.F. Roesler, and P. Hodakievic. 1988. Monitoring Volatile Organics in Water by a Photovac Portable Gas Chromatograph with Multiple Headspace Extraction Method. In: U.S. EPA (1988a), pp. 261-270.

Hoffland, L.D. and D.B. Shoff. 1991. Ion Mobility Spectrometry as a Field Screening Technique. In: U.S. EPA (1991a), pp: 137-152.

Hogan, L.M. 1991. Field Screening Techniques Used in the Detection of DNAPL Concentrations During Borehole Advancement. In: Ground Water Management 8:135-149 (Eastern GW Issues Focus Conf.).

Holbrook, T. 1987. Hydrocarbon Vapor Plume Definition Using Ambient Temperature Headspace Analysis. In: Proc. NWWA/API Conf. on Petroleum Hydrocarbons and Organic Chemicals in Ground Water--Prevention, Detection, and Restoration, National Water Well Association, Dublin, OH, pp. 317-328.

Hollenberg, C.P. and H. Sahn (eds.). 1988. BIOTEC-2: Biosensors and Environmental Biology. Gustav Fischer, New York, NY.

Holm, T.R., G.K. George, and M.J. Barcelona. 1986. Dissolved Oxygen and Oxidation-Reduction Potentials in Ground Water. EPA/600/2-86/042 (NTIS PB86-179678), 66 pp.

Homsher, M.T., et al. 1988. Development of a Protocol for the Assessment of Gas Chromotographic Field Screening Methods. In: U.S. EPA (1988a), pp. 439-462.

Janata, J. and A. Bezegh. 1988. Chemical Sensors. Analytical Chemistry 60:62R-74R.

Jarvis, N.L., H. Wohltjen, and J.R. Lint. 1991. Surface Acoustic Wave (SAW) Personal Monitor of Toxic Gases. In: U.S. EPA (1991a), pp. 73-83.

Jenkins, R. 1984. X-Ray Fluorescence Analysis. Analytical Chemistry 56(9):1099A.

Jenkins, R.A., et al. 1988. Technology Assessment of Field Portable Instrumentation for Use at Rocky Mountain Arsenal. ORNL/TM-10542. Oak Ridge National Laboratory, Oak Ridge, TN. (Prepared for U.S. Army Toxic and Hazardous Materials Agency.)

Jenkins, R.A., F.F. Dyer, R.L. Moody, C.K. Bayne, and C.V. Thompson. 1989. Experimental Evaluation of Selected Field Portable Instrumentation for Quantitative Determinations of Contaminant Levels in Soil and Water at Rocky Mountain Arsenal. ORNL/TM-11385. Oak Ridge National Laboratory, Oak Ridge, TN. (Prepared for U.S. Army Toxic and Hazardous Material Agency.)

Jenkins, T.F., M.E. Walsh, M.H. Stutz, and K.T. Lang. 1991. Development of Field Screening Methods for TNT and RDX in Soil and Ground Water. In: U.S. EPA (1991a), pp. 683-686.

Jermakian, D.A. and C.J. Majika. 1988. Applications of Field Headspace Analysis and Soil Gas Analysis Using an Organic Vapor Meter to Assist in Identifying Laboratory Sample Locations. In: Proc. 5th Nat. Conf. on Hazardous Wastes and Hazardous Materials, Hazardous Materials Control Research Institute, Silver Spring, MD, pp. 434-437.

Johnson, H.P. 1964. Meter for Measuring Flow Discharge from Pipes. Agric. Eng. 45:378-379.

Jones, A.A. 1982. X-Ray Fluorescence Spectrometry. In: Methods of Soil Analysis, Part 2, Chemical and Microbiological Properties, 2nd edition, A.L. Page, R.H. Miller, and D.R. Keeney (eds.), ASA Monograph No 9, American Society of Agronomy, Madison, WI, pp. 85-121.

Jorgensen, D.C. 1969. Field Use of Orifice Meters. Ground Water 7(4):8-11.

Joseph, M. 1992. HPLC Detector Options for the Determination of Polynuclear Aromatic Hydrocarbons. Pollution Equipment News 24(4):86-87.

Junk, T., et al. 1991a. Rapid Determination of Semivolatile Pollutants by Thermal Extraction/Gas Chromatography/Mass Spectrometry. In: U.S. EPA (1991a), pp. 327-338.

Junk, T., T.R. Irvin, K.C. Donnelly, and D. Marek. 1991b. Quantification of Pesticides on Soils by Thermal Extraction-GC/MS. In: U.S. EPA (1991a), pp. 687-688.

Kaelin, L.W. and T.H. Prichett. 1991. A Portable Gas Chromatograph with an Argon Ionization Detector for the Field Analysis of Volatile Organics. In: U.S. EPA (1991a), pp. 689-691.

Kasper, K.D., D.M. Twomey, and D. Dimsmore. 1991. On-Site Analysis of Fuel-Related Hydrocarbons in Soils by Infrared

Methods. In: Ground Water Management 8:673-688 (NWWA/API Hydrocarbons Symp.). [IR spectroscopy]

Keller, M.R. and G. Ganapathi. 1991. Portable Gas Chromatograph Field Monitoring of PCB Levels in Soil at the Elza Gate Property. In: U.S. EPA (1991a), pp. 697-700.

Kendall, D.S. 1991a. The Application of Infrared Spectroscopy to Hazardous Wastes. In: Hazardous Waste Measurements, M.S. Simmons (ed.), Lewis Publishers, Chelsea, MI, pp. 133-158.

Kendall, D.S. 1991b. The Application of X-Ray Fluorescence Spectrometry to the Analysis of Hazardous Wastes. In: Hazardous Waste Measurements, M.S. Simmons (ed.), Lewis Publishers, Chelsea, MI, pp. 193-208.

Kenny, J.E., G.B. Jarvis, and H. Xu. 1988. Instrumentation and Methodology for Multicomponent Analysis Using In Situ Laser-Induced Fluorescence. In: U.S. EPA (1988a), pp. 133-139. [Fiber optics]

King, T.V.V. and R.N. Clark. 1988. Reflectance Spectroscopy (0.2 to 20 μm) as an Analytical Method for the Detection of Organics on Soils. In: U.S. EPA (1988a), pp. 485-488.

Klainer, S.M., M.E. Silverstein, V.A. Ecker, D.J. Chaloud, and S. Billets. 1991. Field Evaluation of the Bruker Mobile Mass Spectrometer Under the U.S. EPA Site Program. In: U.S. EPA (1991a), pp. 705-708.

Koglin, E. and E. Poziomek. 1990. Advances in Field Screening Methods for Hazardous Waste Site Investigations. Am. Environ. Lab. 12/90(December):18-24.

Kopp, J.F. and G.D. McKee. 1983. Methods for Chemical Analysis of Water and Wastes. EPA/600/4-74/020 (NTIS PB84-128677). (Supersedes report with the same title dated 1979.)

Korte, N. and D. Ealey. 1983. Procedures for Field Chemical Analyses of Water Samples. U.S. Department of Energy Technical Measurements Center Report GJ/TMC-07(83), (NTIS DE84-004369), 56 pp.

Ladouceur, C.A. 1991. The DITAM Assay: A Fast Fieldable Method to Detect Hazardous Wastes, Toxic Chemicals and Drugs. In: U.S. EPA (1991a), pp. 709-710. [Diffusion through a membrane enzyme immunoassay, progesterone, Riciniu communis]

Langmuir, D. 1971. Eh-pH Determinations. In: Procedures in Sedimentary Petrology, R.E. Carver (ed.), John Wiley & Sons, New York, NY, pp. 597-634.

Leibman, C.P., D. Dogruel, and E.P. Vanderveer. 1991. Transportable GC/Ion Trap Mass Spectrometry for Trace Field Analysis of Organic Compounds. In: U.S. EPA (1991a), pp. 367-376.

Lieberman, S.H., G.A. Theriault, S.S. Cooper, P.G. Malone, R.S. Olsen, and P.W. Lurk. 1991. Rapid, Subsurface, In Situ Field Screening of Petroleum Hydrocarbon Contamination Using Laser Induced Fluorescence over Optical Fibers. In: U.S. EPA (1991a), pp. 57-65. [Diesel fuel, JP-5]

Liebman, S., M.B. Wasserman, E.J. Levy, and S. Lurcott. 1991. On-Site Multimedia Analyzers: Advanced Sample Processing with On-Line Analysis. In: U.S. EPA (1991a), pp. 299-305. [Purge and trap, supercritical fluid extraction]

Lin, J.-N., et al. 1988. Remote Continuous Multichannel Biochemical Sensors Based on Fluoroimmunoassay Technologies. In: U.S. EPA (1988a), pp. 251-252. [Fiber optics]

Lindsay, S.S. and M.J. Baedecker. 1988. Determination of Aqueous Sulfide in Contaminated and Natural Water Using the Methylene Blue Method. In: Ground-Water Contamination: Field Methods, ASTM STP 963, A.G. Collins and A.I. Johnson (eds.), American Society for Testing and Materials, Philadelphia, PA, pp. 349-357.

Linenberg, A. 1988. Hazardous Waste Site Measurements of PPB Levels of Chlorinated Hydrocarbons Using a Portable Gas Chromatograph. In: U.S. EPA (1988a), pp. 271-274.

Linenberg, A. and D. Robinson. 1991. Rapid Screening of Ground Water Contaminants Using Innovative Field Instrumentation. In: U.S. EPA (1991a), pp. 711-712. [Purge and trap argon ionization detector]

Lopez-Avila, V., N.S. Dodhiwala, and W.F. Beckert. 1991. Method for the Supercritical Fluid Extraction of Soils/Sediments. EPA/600/4-90/026 (NTIS PB91-127803).

Mackay, R.A. 1991. An Overview of Army Sensor Technology Applicable to Field Screening of Environmental Pollutants. In: U.S.

EPA (1991a), pp. 17-24.

Mackiewicz, M.C. 1990. A Simple 11-Step Procedure to Document the Accuracy, Precision and Significance by Field Instruments. In: Ground Water Management 2:373-383 (4th NOAC).

Mackiewicz, M.C. 1991. A Methodology for Comparing Field Response of Similar Instruments and Documenting the Reliability of the Measurements. In: Ground Water Management 5:591-599 (5th NOAC).

Madden, M.P. and W.I. Johnson. 1992. Installation Restoration and Hazardous Waste Control Technologies, 1992 Edition. CETHA-TS-CR-92053, U.S. Army Corps of Engineers Toxic and Hazardous Materials Agency, Aberdeen Proving Ground, MD, 388 pp. [Section III, Analytical Methods and Instrumentation Development, contains one-page summaries of methods being tested by U.S. military (Air Force, Navy, Army) and U.S. EPA]

Mann, C.K. and T.J. Vickers. 1988. Hazardous Waste Analysis by Raman Spectroscopy. In: U.S. EPA (1988a), pp. 111-116. [UV fluorescence]

Matthews, J.E. and A.A. Bulich. 1984. A Toxicity Reduction Test System to Assist Predicting Land Treatability of Hazardous Wastes. In: Hazardous and Industrial Solid Waste Testing: 4th Symposium, J.K. Petros, Jr., W.J. Lacy, and R.A. Conway (eds.), ASTM STP-886, American Society of Testing and Materials, Philadelphia, PA, pp. 176-191. [Microtox assay]

Matthews, J.E. and L. Hastings. 1987. Evaluation of Toxicity Test Procedure for Screening Treatability Potential of Waste in Soil. Toxicity Assessment: International Quarterly 2:265-281. [Microtox assay]

McBride, M.B. 1986. Magnetic Methods. In: Methods of Soil Analysis, Part 1, 2nd edition, A. Klute (ed.), Agronomy Monograph No. 9, American Society of Agronomy, Madison, WI, pp. 219-270.

McClennen, W.H., N.S. Arnold, H.L.C. Meuzelaar, E. Ludwig, and J.S. Lighty. 1991. The Application of a Mobile Ion Trap Mass Spectrometer System to Environmental Screening and Monitoring. In: U.S. EPA (1991a), pp. 339-349.

McGinnis, R.N. and A.J. Hafferty. 1987. Field Analytical Screening for Acid Extractables in Soil and Water. In: Superfund '87, Hazardous Materials Control Research Institute, Silver Spring, MD, pp. 107-110.

McMahon, P.L., R. Suva, and C. Brooks. 1988. Delivery System for Rapid Semi-Quantitative Analysis of Low Molecular Weight Contaminants and Residues. In: U.S. EPA (1988a), pp. 235-238.

Meiri, D., D.G. Bradfield, and D.M. Downs. 1990. Delineation of Heavy Metals in Surface Soil by Portable X-Ray Fluorescence Analysis Screening. In: Proc. 4th Nat. Outdoor Action Conf. on Aquifer Restoration, Ground Water Monitoring and Geophysical Methods. Ground Water Management 2:1067-1079.

Melcher, R.G. and P.L. Morabito. 1991. On-Line Screening Analyzers for Trace Organics Utilizing a Membrane Extraction Interface. In: U.S. EPA (1991a), pp. 717-720.

Meuzelaar, H.L.C., D.T. Urban, and N.S. Arnold. 1991. Development and Testing of a Man-Portable Gas Chromatograph/Mass Spectrometry System for Air Monitoring. In: U.S. EPA (1991a), pp. 289-297.

Mierzwinksi, A. and Z. Witkiewicz. 1989. The Application of Piezoelectric Detectors for Investigations of Environmental Pollution. Environ. Pollution 57:181-198.

Milanovich, F.P., P.F. Daley, K. Langry, B.W. Colston, Jr., S.B. Brown, and S.M. Angel. 1991. A Fiber Optic Sensor for the Continuous Monitoring of Chlorinated Hydrocarbons. In: U.S. EPA (1991a), pp. 43-47.

Montgomery, R.E., D.P. Remeta, and M. Gruenfeld. 1985. Rapid On-Site Methods of Chemical Analysis. In: Contaminated Land, M.A. Smith (ed.), Plenum, New York, NY, pp. 257-309.

Moore, G. 1991. Improvements in the Monitoring of ppm Level Organic Vapors with Field Portable Instruments. In: U.S. EPA (1991a), pp. 483-496.

Moore, D.I., C.N. Dohm, J.R. Gosz, and R.J. Hill. 1991. Use of Long-Path FTIR Spectrometry in Conjunction with Scintillometry to Measure Gas Fluxes. In: U.S. EPA (1991a), pp. 541-548.

Moreton, E.P., P.R. Walsh, and L.J. Lawlor. 1991. Rapid Field Methods for the Quantification of Volatile Aromatics (BTEX) and Total Petroleum Hydrocarbons on Soil. In: Ground Water Management 8:75-87 (NWWA/API Hydrocarbons Symp.).

Moy, C.S. 1989. Advantages of a Field Screening Method for Mitigating PCBs in Soils. In: Superfund '89, Hazardous Materials Control Research Institute, Silver Spring, MD, pp. 19-22.

Mullins, C.E. 1977. Magnetic Susceptibility of the Soil and Its Significance in Soil Science--A Review. J. Soil Science 28:223-246.

National Institute for Petroleum and Energy Research. 1990. Installation Restoration and Hazardous Waste Control Technologies, 1990 edition. CETHA-TS-CR-90067, U.S. Army Toxic and Hazardous Material Agency, Aberdeen Proving Ground, MD, 346 pp. [Section III cover analytical method and instrumentation development; updates 1988 edition, AMXTH-TE-CR-88010]

Newman, W.A. and G. Kimball. 1991. Dissolved Oxygen Mapping: A Powerful Tool for Site Assessments and Ground Water Monitoring. In: Ground Water Management 5:103-118 (5th NOAC).

Nielsen, J.M., G.F. Pinder, T.J. Kulp, and S.M. Angel. 1991. Investigation of Dispersion in Porous Media Using Fiber-Optic Technology. Water Resources Research 27(10):2743-2749.

Nielsen, G.L., J.D. Austin, and D. Schmitt. 1992. Optimizing the Use of Field-Portable Gas Chromatographs During Environmental Contamination Investigation and Remediation Projects. Ground Water Management 11:369-383 (6th NOAC).

Nieuwenhuizen, M.S. and A.W. Barendsz. 1987. Processes Involved at the Chemical Interface of a SAW Chemosensor. Sens. Actuators 11:45-62.

Overton, E.B., R.W. Sherman, C.F. Steele, and H.P. Dharmasena. 1988a. Correlation Chromatography with a Portable Microchip Gas Chromatograph. In: U.S. EPA (1988a), pp. 275-278.

Overton, E.B., C.B. Henry, and C. Sutton. 1988b. Field Deployable Instrument for the Analysis of Semivolatile Organic Compounds. In: U.S. EPA (1988a), pp. 407-410. [Thermal chromatograph]

Overton, E.B., E.S. Collard, H.P. Dharmasena, P. Klinkhachorn, and C.F. Steele. 1988c. Development of a Temperature Programmed Microchip High Resolution GC/MS for VOC Analysis. In: U.S. EPA (1988a), pp. 395-398.

Overton, E.B., et al. 1988d. Detection of Solvent Vapors Using Piezoelectric Sensors. In: U.S. EPA (1988a), pp. 57.

Pace, C.M., D.A. Miller, M.R. Roby, and L.D. Betowski. 1992. Measurement of Polycyclic Aromatic Hydrocarbons in Soils and Sediments by Particle-Beam/High-Performance Liquid Chromatography/Mass Spectrometry. EPA/600/4-91/032 (NTIS PB92-188721).

Pankow, J.F. 1986. Magnitude of Artifacts Caused by Bubbles and Headspace in the Determination of Volatile Compounds in Water. Analytical Chem. 58:1822-1826.

Pankow, J.F. 1991. Techniques for Removing Water from Moist Headspace and Purge Gases Containing Volatile Organic Compounds: Application in the Purge with Whole-Column Cryotrapping (P/WCC) Method. Environ. Sci. Technol. 25:123-126.

Pankow, J.F. and L.M. Isabelle. 1982. Adsorption-Thermal Desorption as a Method for the Determination of Low Levels of Aqueous Organics. J. Chromatogr. 237:25-39.

Pankow, J.F. and T.J. Kristensen. 1983. Effects of Flow Rate and Temperature on the Thermal Desorbability of Polycyclic Aromatic Hydrocarbons and Pesticides from Tenax-GC. Analytical Chem. 55:2187-2192.

Pankow, J.F. and M.E. Rosen. 1988. Determination of Volatile Compounds in Water by Purging Directly to a Capillary Column with Whole Column Cryotrapping (P/WCC). Environ. Sci. Technol. 22:398-405.

Pankow, J.F., M.P. Ligocki, M.E. Rosen, L.M. Isabelle, and K.M. Hart. 1988. Adsorption/Thermal Desorption with Small Cartridges for the Determination of Trace Aqueous Semi-Volatile Organic Compounds. Analytical. Chem. 60:40-47.

Penrose, W.R., J.R. Stetter, M.W. Findlay, W.J. Buttner, and Z. Cao. 1991. Arrays of Sensors and Microsensors for Field Screening of Unknown Chemical Wastes. In: U.S. EPA (1991a), pp. 85-89. [Organochlorine semiconductor sensor, pyrolysis-electrochemical sensor]

Perlis, R. and M. Chapin. 1988. Low Level XRF Screening Analysis of Hazardous Waste Sites. In: U.S. EPA (1988a), pp. 81-94.

Phelps, K.R. and M.S. DeSha. 1991. Practical Problems Encountered in Remote Sensing of Atmospheric Contaminants. In: U.S. EPA (1991a), pp. 733-736.

Piekarz, D. (ed.). 1990. Ecological Indicators of the State of the Environment. Environ. Monitoring and Assessment 15(3):1-315. [19 papers presented at the Workshop on Ecological Indicators of the State of the Environment]

Piorek, S. and J.R. Pasmore. 1991. A Si/Li Based High Resolution Portable X-Ray Analyzer for Field Screening of Hazardous Waste. In: U.S. EPA (1991a), pp. 737-740.

Piorek, S. and J.R. Rhodes. 1988. A New Calibration Technique for X-Ray Analyzers Used in Hazardous Waste Screening. In: Proc. 5th Nat. Conf. on Hazardous Waste and Hazardous Materials, Hazardous Waste Research Institute, Silver Spring, MD, pp. 428-433.

Popp, S.A. 1989. UV Fluorescence Field Screening Technique Developed and Utilized Under the Superfund Program. In: Proc. 6th Nat. Conf. on Hazardous Wastes and Hazardous Materials, Hazardous Materials Control Research Institute, Silver Spring, MD, pp. 525-529.

Poziomek, E.J. and E.N. Koglin. 1991. Assessment of Available and Emerging Technologies for Field Screening and Analysis of Contaminants at Superfund Sites. EPA/600/X-91/138. U.S. EPA Environmental Monitoring Systems Laboratory, Las Vegas, NV, 51 pp.

Poziomek, E.J., D. Eastwood, R.L. Lidberg, and G. Gibson. 1991. Extraction Disks for Spectroscopic Field Screening Applications. In: U.S. EPA (1991a), pp. 747-750. [Spectrofluorometer]

Quimby, J.M., R.W. Cibulskis, and M. Gruenfeld. 1982. Evaluation and Use of a Portable Gas Chromatograph for Monitoring Hazardous Waste Sites. In: Proc. 3rd Nat. Conf. on Management of Uncontrolled Hazardous Waste Sites, Hazardous Materials Control Research Institute, Silver Spring, MD, pp. 36-39.

Raab, G.A., C.A. Kuheric, W.H. Cole III, R.E. Enwall, and J.S. Dugan. 1990. Field Portable X-Ray Fluorescence for Characterization of Hazardous Waste Sites: A Two Year Program Summary. EPA/600/4-90/009, U.S. EPA Environmental Monitoring Systems Laboratory, Las Vegas, NV.

Raab, G.A., R.E. Enwall, W.H. Cole, III, M.L. Faber, and L.A. Eccles. 1991. X-Ray Fluorescence Field Method for Screening of Inorganic Contaminants at Hazardous Waste Sites. In: Hazardous Waste Measurements, M.S. Simmons (ed.), Lewis Publishers, Chelsea, MI, pp. 159-192.

Radian Corporation. 1988. FGD Chemistry and Analytical Methods Handbook, 2: Chemical and Physical Test Methods, Revision 1. EPRI CS-3612, Electric Power Research Institute, Palo Alto, CA. (Originally published in 1984.)

Ramsey, C.A., D.J. Smith, and E.L. Bour. 1991. A Study of the Calibration of a Portable Energy Dispersive X-Ray Fluorescence Spectrometer. In: U.S. EPA (1991a), pp. 535-541.

Reategui, J., T. Bacon, G. Spangler, and J. Roehl. 1988. Ion Mobility Spectrometry for Identification and Detection of Hazardous Chemicals. In: U.S. EPA (1988a), pp. 349-359.

Remata, D.P., M. Gruenfeld, and R.E. Montgomery. 1990. Rapid On-Site Methods of Chemical Analysis. In: Contaminated Land--Reclamation and Treatment, M.A. Smith (ed.), Plenum Press, New York, NY, pp. 257-304. (Also published as EPA/600/D-90/062 [NTIS PB90-246141].)

Reynolds, M., E. Sandin, and J. Urquhart. 1991. Evolution of Techniques for Characterizing VOC Plumes: A Case Study. In: Ground Water Management (Eastern GW Issues Focus Conf.) 8:583-596. [Long-screen, multi-level wells, auger screen with field GC]

Richter, P. 1991. Remote and In Situ Sensing of Hazardous Materials by Infrared Laser Absorption, Ion Mobility Spectrometry, and Fluorescence. In: U.S. EPA (1991a), pp. 167-172. [LIDAR and IMS for air, UV fluorescence for soils]

Riddell, A., A. Hafferty, and T. Yerian. 1991. Field Analytical Support Project (FASP) Development of High-Performance Liquid Chromatography (HPLC) Techniques for On-Site Analysis of Polycyclic Aromatic Hydrocarbons (PAHs) at Preremedial Superfund Sites. In: U.S. EPA (1991a), pp. 751-753. [Used with UV/visible and fluorescence detectors]

Ritchey, J.D. 1986. Electronic Sensing Devices Used for In Situ Ground Water Monitoring. Ground Water Monitoring Review 6(2):108-113.

Robbat, Jr., A. and G. Xyrafas. 1988a. Evaluation of a Field-Based Mobile, Gas Chromatograph-Mass Spectrometer for the Identification and Quantification of Volatile Organic Compounds on EPA's Hazardous Substances List. In: U.S. EPA (1988a), pp. 343-348.

Robbat, Jr., A. and G. Xyrafas. 1988b. On-Site Soil Gas Analysis of Gasoline Components Using a Field Designed Gas Chromatograph-Mass Spectrometer. In: U.S. EPA (1988a), pp. 481-484.

Robbat, Jr., A., T.-Y. Liu, B. Abraham, and C-J Liu. 1991. Thermal Desorption Gas Chromatography-Mass Spectrometry Field Methods for the Detection of Organic Compounds. In: U.S. EPA (1991a), pp. 319-325.

Robbins, G.A., R.D. Bristol, and V.D. Roe. 1989. A Field Screening Method for Gasoline Contamination Using a Polyethylene Bag Sampling System. Ground Water Monitoring Review 9(4):87-97.

Robbins, G.A., B.G. Deyo, M.R. Temple, J.D. Stuart, and M.J. Lacy. 1990. Soil-Gas Surveying for Subsurface Gasoline Contamination Using Total Organic Vapor Detection Instruments. Part I: Theory and Laboratory Experimentation. Ground Water Monitoring Review 10(3):122-131.

Roe, V.D., M.J. Lacy, and J.D. Stuart. 1989. Manual Headspace Method to Analyze for the Volatile Aromatics of Gasoline in Groundwater and Soil Sample. Analytical Chemistry 61:2584-2585.

Rose, S.R. and A. Long. 1988. Monitoring Dissolved Oxygen in Ground Water: Some Basic Considerations. Ground Water Monitoring Review 8(1):93-97.

Sackman, A.R., R. Perlis, and M. Chapin. 1988. Applications of X-Ray Fluorescence Spectroscopy for Site Screening. In: Superfund '88, Hazardous Materials Control Research Institute, Silver Spring, MD, pp. 97-102.

Saenz, G., P.C. Goodell, and N.E. Pingitore. 1991. A Method of Soil Analysis to Detect and Delineate Subsurface Hydrocarbon Contaminants by Means of Aromatic Hydrocarbons. In: Ground Water Management 8:59-72 (NWWA/API Hydrocarbons Symp.). [UV fluorescence for non-volatile aromatic hydrocarbons]

Sawhney, B.L. 1986. Electron Microprobe Analysis. In: Methods of Soil Analysis, Part 1, 2nd edition, A. Klute (ed.), Agronomy Monograph No. 9, American Society of Agronomy, Madison, WI, 271-290.

Schlager, K.J. and B.J. Beemster. 1991. On-Site and On-Line Spectroscopic Monitoring of Toxic Metal Ions Using Ultraviolet Absorption Spectrometry. In: U.S. EPA (1991a), pp. 759-762.

Schlesing, H., N. Darskus, C. Von Holst, and R. Wallon. 1991. Rapid Screening of Soil Sample for Chlorinated Organic Compounds. In: U.S. EPA (1991a), pp. 763. [Thermal desorption, organochlorine test kits]

Schmidt, J.C., P.G. Koga, and G.C. Misener. 1988. A Portable System Under Development for the Detection of Hazardous Materials in Water. In: U.S. EPA (1988a), pp. 291-298. [EIA biosensor, electrochemical sensor]

Schnell, F.C. and T.C. Chang. 1990. Protein Adduct-Forming Chemicals for Exposure Monitoring: Chemicals Selected for Further Study. EPA/600/4-89/035 (NTIS PB90-151762).

Schulten, H.-R. and M. Schnitzer. 1991. Supercritical Carbon Dioxide Extraction of Long-Chain Aliphatics from Two Soils. Soil Sci. Soc. Am. J. 55:1603-1611.

Shangraw, T.C., D.P. Michaud, and T.M. Murphy. 1988. Verification of the Utility of a Photovac Gas Chromatograph for Conduct of Soil Gas Surveys. In: Proc. 2nd Nat. Outdoor Action Conf. on Aquifer Restoration, Ground Water Monitoring and Geophysical Methods, National Water Well Association, Dublin, OH, pp. 1089-1108.

Sherman, R.W., E.S. Collard, M.F. Solecki, T.H. McKinney, L.H. Grande, and E.B. Overton. 1988a. Development of a Field Portable Concentrator/Purge and Trap Device for Analysis of Volatile Organic Compounds in Ambient Air and Water Samples. In: U.S. EPA (1988a), pp. 279-282.

Sherman, R.W., T.H. McKinney, M.F. Solecki, R.B. Gaines, and B. Shipley. 1988b. Field Use of a Microchip Gas Chromatograph. In: U.S. EPA (1988a), pp. 489-490.

Silverstein, M.E., R.J. White, R.W. Gerlach, and J.M. Van Emon. 1992a. Superfund Innovative Technology Evaluation Demonstration Plan for Westinghouse Bio-Analytic Systems Pentachlorophenol Immunoassays. EPA/600/4-91/028 (NTIS PB92-170190).

Silverstein, M.E., R.J. White, R.W. Gerlach, and J.M. Van Emon. 1992b. Superfund Innovative Technology Evaluation (SITE) Report for the Westinghouse Bio-Analytic Systems Pentachlorophenol Immunoassays. EPA/600/4-91/032 (NTIS PB92-188713).

Silvestri, A., M. Razulis, A. Goodman, A. Vasquez, and A.R. Jones, Jr. 1981. Development of an Development of an Identification Kit for Spilled Hazardous Materials. EPA/600/2-81/194 (NTIS PB82-110727), 88 pp. [Colorimetric, thin-layer chromatography]

Sims, W.R., B.B. Looney, and C.A. Eddy. 1991. Evaluation of a Rapid Headspace Analysis Method for Analysis of Volatile Constituents in Soils and Sediments. In: Ground Water Management 5:655-668 (5th NOAC).

Sinha, M.P. 1991. Development of a Microbore Capillary Column GC-Focal Plane Mass Spectrograph with an Array Detector for Field Measurements. In: U.S. EPA (1991a), pp. 765-773.

Skoog, D.A. 1985. Principles of Instrumental Analysis, 3rd edition. Saunders College Publishing, Philadelphia, PA.

Smith, P.G. and S.L. Jensen. 1987. Assessing the Validity of Field Screening of Soil Samples for Preliminary Determination of Hydrocarbon Contamination. In: Superfund '87, Hazardous Materials Control Research Institute, Silver Spring, MD, pp. 101-103.

Smith, G.H. and O.L. Lloyd. 1986. Patterns of Metal Pollution in Soils: A Comparison of the Values Obtained by Atomic Absorption Spectrophotometry and X-Ray Fluorescence. Environ. Toxicol. Chem. 5:117-127.

Smith, Jr., J.E., T.M. Bond, J.A. Gilbert, and K.M. Leonard. 1988. A Remote Fiber Optic Ground Water Monitoring System Based on Surface Enhanced Raman Spectroscopy. In: Proc. 2nd Nat. Outdoor Action Conf. on Aquifer Restoration, Ground Water Monitoring and Geophysical Methods, National Water Well Association, Dublin, OH, pp. 3-16.

Snyder, A.P., M. Miller, D.B. Shoff, G.A. Eiceman, D.A. Blyth, and J.A. Parsons. 1991. Detection of Microorganisms by Ion Mobility Spectrometry. In: U.S. EPA (1991a), pp. 103-112.

Soil Conservation Service (SCS). 1984. Procedures for Collecting Soil Samples and Methods of Analysis for Soil Survey. Soil Survey Investigations Report No. 1, U.S. Government Printing Office, Washington, DC.

Soltanpour, P.N., J.B. Jones, Jr., and S.M. Workman. 1982. In: Methods of Soil Analysis, Part 2, Chemical and Microbiological Properties, 2nd edition, A.L. Page, R.H. Miller, and D.R. Keeney (eds.), ASA Monograph No 9, American Society of Agronomy, Madison, WI, pp. 29-65.

Spittler, T.M. 1980. Use of Portable Organic Vapor Detectors for Hazardous Waste Site Investigations. In: Proc. Nat. Conf. on Management of Uncontrolled Hazardous Waste Sites, Hazardous Materials Control Research Institute, Silver Spring, MD.

Spittler, T.M. 1984. Field Measurement of Polychlorinated Biphenyls in Soil and Sediment Using a Portable Gas Chromatograph. In: Environmental Sampling of Hazardous Wastes, G.E. Schweitzer and J.A. Santolucito (eds.), ACS Symp. Series 267, American Chemical Society, Washington, DC, pp. 37-42.

Spittler, T.M. 1991. The Use of Field Gas Chromatography to Protect Groundwater Supplies. In: U.S. EPA (1991a), pp. 377-382.

Spittler, T., R. Siscanaw, and M. Lataille. 1982. Correlation Between Field GC Measurement of Volatile Organics and Laboratory Confirmation of Collected Field Samples Using the GC/MS: Extended Abstract. In: Proc. 3rd Nat. Conf. on Management of Uncontrolled Hazardous Waste Sites, Hazardous Materials Control Research Institute, Silver Spring, MD, pp. 57.

Spittler, T.M., M.J. Cuzzupe, and J.T. Griffith. 1988. A Field Method for Determination of Volatile Organics in Soil Samples. In: U.S. EPA (1988a), pp. 155-157.

Stamnes, R.L., G.D. DeYong, and C.D. Carlson. 1991. Field Analysis for Hexavalent Chromium in Soil. In: U.S. EPA (1991a), pp. 785-788. [Hach kit]

Steen, A. 1987. Biomonitoring to Achieve Control of Toxic Effluents. EPA/625/8-87/013, 48 pp. Available from CERI.*

Stetter, J.R., S. Zaromb, W.R. Penrose, M.W. Findlay, Jr., and T. Otagawa. 1984. Portable Device for Detecting and Identifying Hazardous Vapors. In: 1984 Hazardous Materials Spill Conference Proceedings, Government Institutes, Inc., Rockville, MD, pp. 183-190.

Street, J.J. and W.M. Peterson. 1982. Anodic Stripping Voltammetry and Differential Pulse Polarography. In: Methods of Soil Analysis, Part 2, Chemical and Microbiological Properties, 2nd edition, A.L. Page, R.H. Miller, and D.R. Keeney (eds.), ASA Monograph No 9, American Society of Agronomy, Madison, WI, pp. 133-148.

Stuart, J.D., S. Wange, G.A. Robbins, and C. Wood. 1991. Field Screening of BTEX in Gasoline-Contaminated Groundwater and Soil Samples by a Manual, Static Headspace GC Method. In: U.S. EPA (1991a), pp. 407-414.

Symons, B.D. and R.C. Sims. 1988. Assessing Detoxification of a Complex Hazardous Waste Using the Microtox® Bioassay. Archives of Environmental Contamination and Toxicology 17:497-505.

Szelewski, M. and M. Wilson. 1988. Specific Detection of Any Gas Chromatograph Element in Sediment Extracts. In: U.S. EPA (1988a), pp. 367-374.

Taylor, T.A., H. Xu, and J.E. Kenny. 1991. Laser Fluorescence EEM Instrument for In-Situ Groundwater Screening. In: U.S. EPA (1991a), pp. 797-803. [Fiber optics]

Thatcher, L.L., V.J. Janzer, and K.W. Edwards. 1977. Methods for Determinations of Radioactive Substances in Water and Fluvial Sediments. U.S. Geological Survey Techniques of Water Resources Investigations, TWRI 5-A5, 95 pp.

Theis, T.L., A.G. Collins, P.J. Monsour, S.G. Pavlostathis, and C.D. Theis. 1991. Analysis of Total Polyaromatic Hydrocarbon Using Ultraviolet-Fluorescence Spectrometry. In: U.S. EPA (1991a), pp. 805-809.

Thompson, C. 1974. Ultraviolet-Visible Absorption Spectroscopy. Willard Grant Press, Boston, MA.

Thompson, C.M., et al. 1989. Techniques to Develop Data for Hydrogeochemical Models. EPRI EN-6637, Electric Power Research Institute, Palo Alto, CA.

Thorn, K.A. 1987. The Use of Carbon-13 Nuclear Magnetic Resonance Spectroscopy in the Analysis of Complex Samples of Environmental Interest. In: Proc. 3rd USGS Toxic Waste Technical Meeting (Pensacola, FL), U.S. Geological Survey Open-File Report 87-109, pp. E-13 to E-18.

Trainor, T.M. and F.H. Laukien. 1988. Design and Performance of a Mobile Mass Spectrometer Developed for Environmental Field Investigations. In: U.S. EPA (1988a), pp. 299-310.

Transue, L.A., A. Hafferty, and T. Yerian. 1991. Field Analytical Support Project (FASP) Use to Provide Data for Characterization of Hazardous Waste Sites for Nomination to the National Priorities List (NPL): Analysis of Polycyclic Aromatic Hydrocarbons (PAHs) and Pentachlorophenol (PCP). In: U.S. EPA (1991a), pp. 309-317.

Turner, S.A., Twomey, Jr., D., T.L. Francoeur, and B.K. Butler. 1991. On-Site Analysis of Chlorinated Solvents in Groundwater by Purge and Trap GC. In: U.S. EPA (1991a), pp. 811-814.

Tuttle, J.C. and G.H. Chapman. 1989. Field Analytical Screening, Reconnaissance Geophysical and Temporary Monitoring Well Techniques--An Integrated Approach to Pre-Remedial Site Characterization. In: Proc. 6th Nat. Conf. on Hazardous Waste and Hazardous Materials, Hazardous Materials Control Research Institute, Silver Spring, MD, pp. 530-537.

Twomey, D.M., S.A. Turner, and W.A. Murray. 1990. The Modified Spittler Method for Fast, Accurate and Low Cost Determination of PCB Concentrations in Soils and Sediments. In: Proc. 2nd Int. Conf. for the Remediation of PCB Contamination (Houston, TX), pp. 83-89.

U.S. Department of Energy. 1988. Proceedings of the DOE In-Situ Characterization and Monitoring Technologies Workshop. DOE/HWP-62, U.S. Department of Energy Office of Defense Waste and Transportation Management.

U.S. Environmental Protection Agency (EPA). 1982. Available Field Methods for Rapid Screening of Hazardous Waste Materials at Waste Site, Interim Report, Class A Poisons. EPA/600/X-82/014.

U.S. Environmental Protection Agency (EPA). 1986a. Permit Guidance Manual on Hazardous Waste Land Treatment Demonstrations. EPA/530/SW-86/032 (NTIS PB86-229184). [Microtox assay]

U.S. Environmental Protection Agency (EPA). 1986b. Test Methods for Evaluating Solid Waste, 3rd edition, Vol. II: Field Manual Physical/Chemical Methods. EPA/530/SW-846 (NTIS PB88-239223); First update, 3rd edition EPA/530/SW-846.3-1 (NTIS PB89-148076). (Available on a subscription basis from U.S. Government Printing Office, Stock #955-001-00000-1.)

U.S. Environmental Protection Agency (EPA). 1987. A Compendium of Superfund Field Operations Methods, Part 2. EPA/540/P-87/001 (OSWER Directive 9355.0-14), (NTIS PB88-181557), 644 pp. [GC, total/specific organic vapor detectors]

U.S. Environmental Protection Agency (EPA). 1988a. First International Symposium, Field Screening Methods for Hazardous Waste Site Investigations. EPA/600/D-89/189 (NTIS PB90-132572), 519 pp.

U.S. Environmental Protection Agency (EPA). 1988b. Field Screening Methods Catalog: User's Guide. EPA/540/2-88/005. FSMC System Coordinator, OERR, Analytical Operations Branch (WH-548-A), U.S. EPA, Washington, DC.

U.S. Environmental Protection Agency (EPA). 1991a. Second International Symposium, Field Screening Methods for Hazardous Waste and Toxic Chemicals, L.R. Williams and E.N. Koglin (eds.), EPA/600/9-91/028 (NTIS PB92-125764), 892 pp.

U.S. Environmental Protection Agency (EPA). 1991b. The Superfund Innovative Technology Evaluation Program: Technology Profiles, 4th edition. EPA/540/5-91/008. [Technology profiles on EIA, IMS, portable GC, FTIR]

U.S. Environmental Protection Agency (EPA). 1992. The Superfund Innovative Technology Evaluation Program: Technology Profiles, 5th edition. EPA/540/R-92/077, 388 pp. [Monitoring and measurement technology section summarizes information on EIA, IMS, portable GC and FTIR]

U.S. Geological Survey (USGS). 1980. Ground Water. In: National Handbook of Recommended Methods for Water Data Acquisition, USGS Office of Water Data Coordination, Reston, VA, pp 2-1 to 2-149.

Vandegrift, S.A. 1988. Analysis of Volatile Organic Compounds in Water by Dynamic Stripping, Thermal Desorption, Cryofocusing and Capillary Gas Chromatography. J. Chrom. Science 26(1):513-516.

Vanderlaan, M., B. Watkins, and L. Stanker. 1988. Immunochemical Quantification of Dioxins in Industrial Chemicals and Soils. In: U.S. EPA (1988a), pp. 249-250.

Vanderlaan, M., L.H. Stanker, B.E. Watkins, and D.W. Roberts (eds.). 1991. Immunoassays for Trace Chemical Analysis: Monitoring Toxic Chemicals in Humans, Foods and the Environment. ACS Symp. Series No. 451, American Chemical Society, Washington, DC, 362 pp.

Van Emon, J.M. and R.O. Mumma. 1990. Immunochemical Methods for Environmental Analysis. ACS Symp. Series No. 442, American Chemical Society, Washington, DC, 239 pp.

Van Emon, J.M., J.N. Seiber, and B.D. Hammock. 1991a. Immunoassay Techniques for Pesticide Analysis. In: Methods for Pesticides and Plant Growth Regulators, Academic Press, New York, NY, pp. 217-263.

Van Emon, J.M., R.W. Gerlach, R.J. White, and M.E. Silverstein. 1991b. U.S. EPA Evaluation of Two Pentachlorophenol Immunoassay Systems. In: U.S. EPA (1991a), pp. 815-818.

Vo-Dinh, T. 1984. Room Temperature Phosphorimetry for Chemical Analysis. Wiley, New York, NY.

Vo-Dinh, T., et al. 1991. Rapid Screening Techniques for Polychorinated Biphenyls (PCBs) Using Room Temperature Phosphorescence. In: U.S. EPA (1991a), pp. 819-822.

Wander, J.D., B.L. Lentz, L. Michalec, and V. Taylor. 1988. Prototype Volatile Organic Compound (VOC) Monitor. In: U.S. EPA (1988a), pp. 319-324.

Warren-Hicks, W., B.J. Parkhurst, and S.S. Baker, Jr. (eds.). 1989. Ecological Assessment of Hazardous Waste Sites: A Field and Laboratory Reference. EPA/600/3-89/013 (NTIS PB89-205967).

Watson, W., J.P. Walsh, and B. Glynn. 1989. On-Site X-Ray Fluorescence Spectrometry Mapping of Metal Contaminants in Soils at Superfund Sites. American Laboratory, 21(July). [Mobile XRF]

Weslowksi, D. and A. Alwan. 1991. Field Measurements of Organic Compounds by Gas Chromatography. In: Hazardous Waste Measurements, M.S. Simmons (ed.), Lewis Publishers, Chelsea, MI, pp. 81-96.

White, J.L. and C.B. Roth. 1986. Infrared Spectrometry. In: Methods of Soil Analysis, Part 1, 2nd edition, A. Klute (ed.), Agronomy Monograph No. 9, American Society of Agronomy, Madison, WI, pp. 291-330.

Whittig, L.D. and W.R. Allardice. 1986. X-Ray Diffraction Techniques. In: Methods of Soil Analysis, Part 1, 2nd edition, A. Klute

(ed.), Agronomy Monograph No. 9, American Society of Agronomy, Madison, WI, 331-362.

Williams, R.D. and J.R. Cooper. 1990. Locating Soil Boundaries Using Magnetic Susceptibility. Soil Science 150:889-895.

Wise, M.B., M.V. Buchanan, and M.R. Guerin. 1990. Rapid Environmental Organic Analysis by Direct Sampling Glow Discharge Mass Spectrometry and Ion Mass Spectrometry: Summary of Pilot Studies. USATHAMA CETHA-TE-CR-90029 and ORNL/TM-11538, U.S. Army Toxic and Hazardous Materials Agency, Aberdeen Proving Ground, MD, 53 pp.

Wise, M.B., G.B. Hurst, C.V. Thompson, M.V. Buchanan, and M.R. Guerin. 1991a. Screening Volatile Organics by Direct Sampling Ion Trap and Glow Discharge Mass Spectrometry. In: U.S. EPA (1991a), pp. 273-288. [ITMS/GC/MS, MS/MS]

Wise, M.B., R.H. Ilgner, M.V. Buchanan, and M.R. Guerin. 1991b. Rapid Determination of Drugs and Semivolatile Organics by Direct Thermal Desorption Ion Trap Mass Spectrometry. In: U.S. EPA (1991a), pp. 823-827.

Wohltjen, H. 1984. Chemical Microsensors and Microinstrumentation. Analytical Chemistry 56:87A-103A.

Wohltjen, H., N.L. Jarvis, and J. Lint. 1991. A New Approach for On-Site Monitoring of Organic Vapors at Low PPB Levels. In: U.S. EPA (1991a), pp. 829-833. [Portable GC]

Wong, K.M. and T.M. Carlsen. 1991. A Rapid Screening Procedure for Determining Tritium in Soil (Abstract). In: U.S. EPA (1991a), pp. 835.

Wood, W.W. 1976. Guidelines for Collection and Field Analysis of Ground-Water Samples for Selected Unstable Constituents. U.S. Geological Survey Techniques of Water Resources Investigations TWRI 1-D2, 24 pp.

Woolcock, J. and A. Zafar. 1992. Microscale Techniques for Determination of Magnetic Susceptibility. J. Chemical Education 69:A176-A178.

Woolerton, G.R., S. Valin, and J.P. Gibeault. 1988. The Kwik-Skrene Analytical Testing System: Description of a Tool for Remediation of PCB Spills. In: U.S. EPA (1988a), pp. 387-388. [Test kit]

Wright, B.W. and J.S. Fruchter. 1992. Supercritical Fluid Extraction for the Analysis of Contaminated Soils. EPRI TR-100754, Electric Power Research Institute, Palo Alto, CA.

Wylie, P.L. 1988. Comparing Headspace with Purge and Trap Analysis of Volatile Priority Pollutants. Research & Technology 80(8):65-72

*ORD Publications, U.S. EPA Center for Environmental Research Information, P.O. Box 19963, Cincinnati, OH, 45268-0963 (513-569-7562).

APPENDIX C

GUIDE TO MAJOR REFERENCES OF SUBSURFACE CHARACTERIZATION, MONITORING, AND ANALYTICAL METHODS

A very large technical literature has developed in the last 20 years on characterization and monitoring of contaminated sites. This appendix provides information on major documents published by EPA, other government organizations, universities, and commercial organizations, which provide information of one or more aspects of vadose zone and ground-water characterization and monitoring. Most of these documents relate wholly, or in part, to contaminated sites. Other documents that do not have this perspective are included only if they focus primarily on field methods that can be applicable to contaminated sites.

Table C-1 provides brief descriptive information on over 80 major references. These are categorized into the following groups in the table: (1) Soils and ground water, (2) vadose zone, (3) ground water, (4) soils and solid wastes, and (5) symposia proceedings. EPA publications that are available at no cost from the Center for Environmental Research Information in Cincinnati are indicated with an asterisk in the reference list at the end of this appendix. Wherever possible, the NTIS number of government publications available from the National Technical Information Service (NTIS) is provided. (The NTIS telephone number is 800-553-6847). Publications by the Electric Power Research Institute are available at no cost to government agencies (EPRI Research Reports Center, P.O. Box 50490, Palo Alto, CA 94303, telephone 415-965-4081).

There is a very large literature on subsurface site characterization and monitoring techniques scattered through various annual and intermittent conference series. The published proceedings of four regular conference series serve as an excellent source of information on the latest developments in field characterization and monitoring: (1) The annual National Outdoor Action Conference on Aquifer Restoration, Ground Water Monitoring and Geophysical Methods, (2) the annual Conference on Petroleum Hydrocarbons and Organic Chemicals in Ground Water: Prevention, Detection and Remediation, (3) the annual Conference on Hazardous Materials Control (formerly called Superfund), and (4) the annual Conference on Hazardous Wastes and Hazardous Materials. Proceedings of the first two series are published by the National Water Well Association (NWWA), which changed its name to the National Ground Water Association (NGWA) in 1991 (NGWA Bookstore, P.O. Box 182039, Columbus, OH 43218, telephone 614-761-1711), and the proceedings of the latter two series are published by the Hazardous Materials Control Research Institute (HMCRI Publications Dept., 9300 Columbia Rd., Silver Spring, MD 20910-1702, telephone 301-587-9390).

In addition, the Association of Ground Water Scientists and Engineers of NWWA/NGWA has sponsored numerous conferences focussed on special topics or regional issues. Since 1990, NWWA/NGWA conferences have been published in a subscription series titled Ground Water Management in which six coupons are issued that can be redeemed for the publications in the series of interest to the subscription holder ($140 members/$192.50 nonmembers, see the NGWA address above).

Table C-2 lists the titles of more than 70 published conference/series proceedings focusing on ground water and/or contaminated sites. Many relevant papers in these proceedings are cited in earlier sections of this guide. EPA regional offices and laboratories have many of these documents, and EPA/NTIS numbers are indicated, where available. If a document of interest cannot be found in a nearby library, the indicated sponsor (NWWA/NGWA or HMCRI) should be contacted concerning its availability. Out-of-print NWWA/NGWA publications can be borrowed for a fee from the National Ground Water Information Center (6365 Riverside Drive, Dublin, OH 43017, telephone 614-761-1711).

Table C-3 provides information on major compilations of information on analytical procedures for constituents of geochemical interest at contaminated sites. Most of these books and reports focus on laboratory methods and procedures, but might be useful for additional information on basic analytical methods that can be used in mobile laboratories or adapted for more portable instrumentation.

Table C-1 Major Reference Sources on Subsurface Characterization and Monitoring Methods

Topic	References
Site Investigations	
Hydrologic Characterization	Brakensiek et al. (1979), Brown et al. (1983), Bureau of Reclamation (1981), Dames & Moore (1974), Driscoll (1986), Nielsen and Johnson (1990), Nielsen and Sara (1992), Rehm et al. (1985), Thompson et al. (1989), UNESCO (1983), U.S. EPA (1991a,b), USGS (1977+), Waste Management of North America (1991), Zimmie and Riggs (1981); see also, Tables 4-5 and 4-6
Ecological Assessment	Warren-Hicks et al. (1989); see also, Table 10-5 (bioassessment techniques)
Specific Settings	Surface Mining: Barrett et al. (1980); Hazardous Waste Sites: Cameron (1991), Cochran and Hodge (1985), Ford and Turina (1985), Lesage and Jackson (1992), Oudjik and Mujica (1989), Perket (1986), Sisk (1981), U.S. EPA (1987, 1989a); RCRA Facilities: U.S. EPA (1986d, 1989b,c); Low Level Radioactive Wastes: EG&G (1990); Remedial Operations: Ross and Keeley (1992), U.S. EPA (1988a, 1991a); Surface Impoundments: Silka and Swearingen (1978)
Ground-Water Monitoring	
General Procedures	Collins and Johnson (1988), Crouch et al. (1976), Devinny et al. (1990), EG&G (1990), Everett (1980), Everett et al. (1976), Fried (1975), Gillham et al. (1983), Keith (1992), Loftis and Ward (1979), Mooij and Rovers (1976), Morrison (1983), Nielsen (1991), Nielsen and Johnson (1990), Nielsen and Sara (1992), Ross and Keeley (1992), Todd et al. (1976), U.S. DOE (Various dates), U.S. EPA (1986b, 1990a,b, 1991a,b, 1993), van Duijvenbooden and van Waegeningh (1987)
Monitoring Wells	Aller et al. (1991), Barcelona et al. (1983), Driscoll (1986), Howsam (1990), Korte and Kearl (1985), Nielsen and Schalla (1991); see also, Tables 2-4 and B-2
Sampling Equipment	See Tables 5-4 and 5-5
Sampling Procedures	API (1987), Barcelona et al. (1983, 1985), Berg (1982), Classen (1982), Holden (1984), Keith (1988), Korte and Kearl (1985), Nash and Leslie (1991), Rainwater and Thatcher (1960), Scalf et al. (1981), Summers and Gherini (1987), Unwin (1982), Wood (1976); see also, Table B-4.
Costs	Crouch et al. (1976), Everett et al. (1976), Loftis and Ward (1979)
Specific Settings	Tinlin (1976); Solid Waste Disposal: Fenn et al. (1977), U.S. EPA (1981a,b, 1986f); RCRA Facilities: U.S. EPA (1983a,b, 1985, 1986a,d,e,f, 1989c); Enhanced Oil Recovery: Beck et al. (1981); Surface Mining: Everett (1979, 1983, 1985), Everett and Hoylman (1980a,b), Williams and Schuman (1987); Oil Shale: Everett (1985), Slawson (1979, 1980a,b); Electric Utilities: GeoTrans (1989), Redwine et al. (1985); Wastewater and Sludge Application: Ho et al. (1978); Waste Spills: Pilie et al. (1975), Yang and Bye (1979); Geothermal: Weiss et al. (1979)
State/Local Guidance Documents*	Connecticut Environmental Protection Agency (1983), Lindorff et al. (1987), NJDEP (1988), Santa Clara County Water District (1985), Stephens (1986)

Table C-1 (cont.)

Topic	References
Microbiological Sampling	Bitton and Gerba (1984), Board and Lovelock (1973), Bordner et al. (1978), Britton and Greeson (1989), Costerton and Colwell (1979), Dunlap et al. (1977), Rosswall (1973), USGS (1977+); see also, references in Section 9.3.6
Vadose Zone Monitoring	
General	Everett et al. (1983), Nielsen and Johnson (1990), Nielsen and Sara (1992), Rehm et al. (1985), Rijtema and Wassink (1969), U.S. EPA (1986c), Wilson (1980)
Soil Solute	Devinny et al. (1990), Morrison (1983), Nash and Leslie (1991), Nielsen (1991), USGS (1977+); see also, Table 9-4
Soil Gas	Devitt et al. (1987), Ford et al. (1984), Kerfoot and Barrows (1987), U.S. EPA (1988b); see also, references for Section 9.4.2
Soils	
Field Characterization	Blume et al. (1991), Boulding (1991), Brakensiek et al. (1979), Bureau of Reclamation (1974, 1990), Cameron (1991), Hodgson (1978), SCS (1971)
General Sampling	Acker (1974), Barth et al. (1989), Cameron (1966), Corps of Engineers (1972), Keith (1992), Hodgson (1978), Hvorslev (1948, 1949), Mason (1992), McKeague (1978), Mooij and Rovers (1976), SCS (1984), U.S. DOE (Various dates); Sediments: Barth and Starks (1985), Edwards and Glysson (1988), Palmer (1985), Plumb (1981); see also, Table 2-5
Sampling for Soil Contaminants	API (1987, 1992), Boulding (1991), Brown et al. (1991), EG&G (1990), Ford et al. (1984), Goodwin et al. (1982), Keith (1988), Scalf et al. (1981), Schweitzer and Santolucito (1984), U.S. EPA (1986b, 1988b, 1989c, 1991a), van Duijvenbooden and van Waegeningh (1987)
Wastes	
Sampling	deVera (1980), Ford et al. (1984), Keith (1988, 1992), Simmons (1991), U.S. DOE (Various dates), U.S. EPA (1986b), Wolbach et al. (1984)
Agency/Organization Index	
U.S. EPA	Soils and Ground Water: Aller et al. (1991), Cochran and Hodge (1985), Dunlap et al. (1977), Everett et al. (1976), Fenn et al. (1977), Ford and Turina (1985), Ford et al. (1984), Ross and Keeley (1992), Scalf et al. (1981), Silka and Swearingen (1978), Sisk (1981), U.S. EPA (1986d, 1987, 1989a,b,c, 1990b, 1991a); Vadose Zone: Devitt et al. (1987), Everett et al. (1983), Kerfoot and Barrows (1987), U.S. EPA (1986c), Wilson (1980); General Ground Water: Barcelona et al. (1985), Berg (1982), Crouch et al. (1976), Loftis and Ward (1979), Tinlin (1976), Todd et al. (1976), U.S. EPA (1990a, 1991a), Yang and Bye (1979); Ground-Water Guidance Documents: U.S. EPA (1981a, 1981b, 1983a,b, 1985, 1986a,e,f, 1988a, 1993); Soil and Solid/Liquid Waste: Barth et al. (1989), Boulding (1991), Cameron (1991), deVera (1980), Hatayama et al. (1980), Mason (1992), Pilie et al. (1975), U.S. EPA (1986b), Yang and Bye (1979); Energy Development Ground-Water Monitoring: Beck et al. (1981), Everett (1979, 1983), Everett and Hoylman (1980a,b); Slawson (1979, 1980a,b), Weiss et al. (1979)

Table C-1 (cont.)

Topic	References
Other Federal	Bureau of Reclamation: Bureau of Reclamation (1974, 1981, 1990); Department of Energy: EG&G (1990), U.S. DOE (Various dates); Fish and Wildlife Service: Brown et al. (1991); Forest Service: Barrett et al. (1980); NASA: Cameron et al. (1966); USATHAMA/Corps of Engineers: Corps of Engineers (1972), Goodwin et al. (1982), Hvorslev (1949), Plumb (1981); USDA/SCS: Brakensiek et al. (1979), SCS (1971, 1984); U.S. Geological Survey: Classen (1982), Edwards and Glysson (1988), Guy (1969), USGS (1977+), Wood (1976)
Other Government	Canada: McKeague (1978), Mooij and Rovers (1976); States*: Barcelona et al. (1983), Connecticut Environmental Protection Agency (1983), Lindorff et al. (1987), NJDEP (1988), Stephens (1986)
American Chemical Society (ACS)	Keith (1988, 1992), Nash and Leslie (1991), Schweitzer and Santolucito (1984)
Amercian Petroleum Institute (API)	API (1987, 1992), Gillham et al. (1983)
American Society for Testing and Materials (ASTM)	ASTM (Annual, 1992a,b); Ground-Water and Vadose Zone STPs: Collins and Johnson (1988), Nielsen and Johnson (1990), Nielsen and Sara (1992), Zimmie and Riggs (1980); Hazardous Waste Solid Testing Conference Series: (Papers in this series tend to focus on laboratory methods, but also include papers on field-oriented techniques): 1st (Conway and Mallow, 1981); 2nd (Conway and Gulledge, 1982); 3rd (Jackson et al., 1984); 4th (Petros et al., 1985); 5th (Perket, 1986); 6th (Lorenzen et al., 1986)
Consulting Firms	Dames & Moore (1974), Everett (1980), GeoTrans (1989), Waste Management of North America (1991)
Electric Power Research Institute (EPRI)	Redwine et al. (1985), Rehm et al. (1985), Summers and Gherini (1987), Thompson et al. (1989)
UNESCO	Brown et al. (1983); Symposia: Rijtema and Wassink (1969), UNESCO (1983)
Other	Devinny et al. (1990), Driscoll (1986), Everett (1985), Fried (1975), Ho et al. (1978), Holden (1984), Howsam (1990), Klute (1986), Lesage and Jackson (1992), Morrison (1983), Nielsen (1991), Oudjik and Mujica (1989), Simmons (1991), Unwin (1982), van Duijvenbooden and van Waegeningh (1987)

*The appropriate state regulatory agency should be contacted for the most current version of any guidance documents.

Table C-2 Conferences and Symposia with Papers Relevant to Subsurface Characterization and Monitoring

Sponsor	Year	Title
EPA/NWWA	1971	1st National Ground Water Quality Symposium (EPA-16060 GRB, NTIS PB214-614)
	1974	2nd (EPA-68-03-0367, NTIS PB257-312)
	1977	3rd (EPA/600/9-77/014, NTIS PB272-908)
	1979	4th (EPA/600/9-79/029, NTIS PB80-103476)
	1980	5th
	1983	6th (State, County, Regional, and Municipal Jurisdictions of Ground Water Protection)
	1984	7th (Innovative Means of Dealing with Potential Sources of Ground Water Contamination)
	1986	8th (Anatomy of Superfund)
NWWA	1981	1st National Ground Water Quality Monitoring Symposium and Exposition
	1982	2nd National Symposium on Aquifer Restoration and Ground Water Monitoring
	1983	3rd
	1984	4th
	1985	5th
	1986	6th
	1987	1st National Outdoor Action Conference on Aquifer Restoration, Ground Water Monitoring, and Geophysical Methods
	1988	2nd
	1989	3rd
	1990	4th GWM 2
	1991	5th GWM 5
NGWA	1992	6th GWM 11
NWWA/API	1984	[1st] Conference on Petroleum Hydrocarbons and Organic Chemicals in Ground Water--Prevention, Detection, and Restoration
	1985	[2nd]
	1986	[3rd]
	1987	[4th]
	1988	[5th]
	1989	[6th]
	1990	[7th] GWM 4
	1991	[8th] GWM 8
NGWA/API	1992	[9th] GWM 14
Modeling		
NWWA/IGWMC	1984	1st Conference on Practical Applications of Ground Water Models
	1985	2nd
	1986	3rd Conference on Solving Ground Water Problems with Models
	1988	Conference on Geochemical Modeling of Ground Water Contamination
	1989	4th Conference on Solving Ground Water Problems with Models
NGWA/IGWMC	1992	5th GWM 9
Geophysics		
NWWA/EPA	1984	[1st] Conference on Surface and Borehole Geophysical Methods in Ground Water Investigations
	1985	[2nd]
	1986	Surface and Borehole Geophysical Methods and Ground Water Instrumentation Conference and Exposition

Table C-2 (Cont.)

Sponsor	Year	Title
Vadose Zone		
NWWA/EPA	1983	[1st] Conference on Characterization and Monitoring in the Vadose (Unsaturated) Zone
	1985	[2nd]
	1986	3rd
Karst		
NWWA	1986	[1st] Conference on Environmental Problems in Karst Terranes and Their Solutions
	1988	2nd
	1991	3rd Conference on Hydrogeology, Ecology, Monitoring and Management of Ground Water in Karst Terranes GWM 10
Miscellaneous NWWA Conferences		
NWWA/AGWSE	1988	Ground Water Geochemistry Conference
	1989	Conference on New Field Techniques for Quantifying Physical and Chemical Properties of Heterogeneous Aquifers
	1990	Cluster of Conferences (Agricultural Impacts on Ground Water Quality; Ground Water Geochemistry; Ground Water Management and Wellhead Protection; Environmental Site Assessments: Case Studies and Strategies) GWM 1
	1991	Environmental Site Assessments Case Studies and Strategies: The Conference GWM 6
NGWA/AGWSE	1992	[2nd] Environmental Site Assessments Case Studies and Strategies: The Conference GWM 12
NWWA Eastern Regional Conferences		
NWWA/AGWSE	1984	[1st] Eastern Regional Ground Water Conference
	1985	[2nd]
	1986	3rd Annual Eastern Regional Ground Water Conference
	1987	4th
	1988	[5th] Focus Conference on Eastern Regional Ground Water Issues
	1989	[6th]
	1990	[7th] GWM 3
	1991	[8th] GWM 7
NGWA/AGWSE	1992	[9th] GWM 13
Other NWWA Regional Conferences		
NWWA	1983	Eastern Regional Conference on Ground Water Management
		Western Regional Conference on Ground Water Management
	1984	Conference on Ground Water Management
	1985	Southern Regional Ground Water Conference
		Western Regional Ground Water Conference
	1986	Conference on Southwestern Ground Water Issues
		Focus Conference on Southeastern Ground Water Issues
	1987	Focus Conference on Midwestern Ground Water Issues
		Focus Conference on Northwestern Ground Water Issues
	1988	[2nd] Focus Conference on Southwestern Ground Water Issues

Table C-2 (Cont.)

Sponsor	Year	Title
Hazardous Materials Control Research Institute Conferences		
HMCRI	1980	1st National Conference on Management of Uncontrolled Hazardous Wastes Sites
	1981	2nd
	1982	3rd
	1983	4th
	1984	5th
	1985	6th
	1986	7th
	1987	8th Superfund '87
	1988	9th Superfund '88
	1989	10th Superfund '89
	1990	11th Superfund '90
	1991	12th Hazardous Materials Control (HMC-Superfund '91)
	1992	13th HMC-Superfund '92
Regional Hazardous Materials Control Conferences		
HMCRI	1990	HMC—Great Lakes '90
	1991	HMC—Northeast '91
	1992	HMC—South '92
HMCRI	1984	1st National Conference on Hazardous Wastes and Environmental Emergencies
	1985	2nd
	1986	3rd National Conference on Hazardous Wastes and Hazardous Materials
	1987	4th
	1988	5th
	1989	6th (HWHM '89)
	1990	7th (HWHM '90)
Miscellaneous Conferences		
HMCRI	1992	National R&D Conference on the Control of Hazardous Materials
	1992	Federal Environmental Restoration '92

[ ]—Indicates that number is not included in the title of the published proceedings.
GRM indicates that proceedings have been published in NWWA/NGWA's Ground Water Management Series.

Abbreviations:

AGWSE	Association of Ground Water Scientists and Engineers (NWWA/NGWA)
API	American Petroleum Institute
EPA	U.S. Environmental Protection Agency
HEW	U.S. Department of Health, Education and Welfare
HMCRI	Hazardous Materials Control Research Institute
IGWMC	International Ground Water Modeling Center
NWWA/NGWA	National Water Well Association (named changed to National Ground Water Association in 1992)

Table C-3 Major Compilations of Analytical Procedures for Constituents of Geochemical Interest

Reference	Description
Instrumentation Principles	Skoog (1985), Willard et al. (1988)
U.S. EPA Analytical Methods	Overviews: Mueller and Smith (1991), Wagner (1992); General: Kopp and McKee (1983); Metals: U.S. EPA (1991c); Organics in Water: Longbottom and Lichtenberg (1982); Solid Waste (SW-846): U.S. EPA (1986b); SW-846 Methods Studies: Edgill (1989), Edgill and Wilburs (1989), Engel et al. (1988); Drinking Water Analysis: Long and Martin (1989), Pfaff (1981), U.S. EPA (1990c,d); Pesticides: Watts (1980); Sediment: Guy (1969), Plumb (1981), U.S. EPA (1989d); Quality Control: Booth (1979), Sharma (1979)
Other U.S. EPA Methods	Field Screening Methods: U.S. EPA (1988b); Ecological Assessment: Warren-Hicks et al. (1989)
U.S. Geological Survey TWRIs	The Techniques of Water Resource Investigation series includes manuals describing procedures for planning and conducting specialized work in water-resources investigations. Wood (1976) covers field analysis of unstable constituents; Fishman and Friedman (1989—supersedes Brown et al., 1970, Skougstad et al., 1979, and Fishman and Bradford, 1982) cover methods for analyzing inorganic constituents in water and fluvial sediment; Barnett and Mallory (1971) describe determination of minor elements in water by emission spectroscopy; Wershaw et al. (1987—supersedes Goerlizt and Brown, 1972) cover methods for determination of organic substances in water and fluvial sediments; Thatcher et al. (1977) cover methods for determination of radioactive substances in water and fluvial sediments; Britton and Greeson (1989—supersedes Greeson et al., 1977) cover methods for collection and analysis of aquatic biological and microbiological samples; Friedman and Erdman (1982) cover quality assurance practices for the chemical and biological analyses of water and fluvial sediments; Guy (1969) covers laboratory methods for sediment analysis.
Other References	
Water Analysis	Standard Methods: APHA (1992), ASTM (Annual-Vols. 11.01 and 11.02), Hach (1991); Other Major References: Fresenius et al. (1988), Rainwater and Thatcher (1960), Thompson et al. (1989)
Soil Analysis	Physical Properties: ASTM (Annual-Vol. 4.08), Blume et al. (1991), Guy (1969-sediments), Klute (1986), SCS (1984), Smith and Mullins (1991), Topp et al. (1992); Soil Chemistry: Council on Soil Testing and Plant Analysis (1992), McKeague (1978), Westerman (1990)
Contaminants	Method Compilations: Plumb (1984), U.S. DOE (Various dates); Ground water: API (1987-petroleum hydrocarbons), Hach (1991—inorganics), Lesage and Jackson (1992); Soil: API (1987, 1992-petroleum hydrocarbons)
Solid Waste	Hazardous Waste: Silvestri et al. (1981), Wolbach et al. (1984); Flue Gas Desulfurization Waste: Noblett and Burke (1990), Radian Corporation (1988); Oil Shale: Wallace et al. (1984); Mine Soils and Overburden: Williams and Schuman (1987)

Some Suggestions Concerning Evaluation of Literature References

New developments in field techniques for ground-water and contaminated site investigations are changing so rapidly that care is required when evaluating the literature, especially when dealing with a method that is outside one's area of special expertise. Several factors affect the weight that should be given to conclusions or recommendations concerning a particular method: (1) Whether the information is from a peer-reviewed or non-peer reviewed source; (2) where the authors come from; and (3) how recently it has been published.

Greatest weight should be given to the content of papers published in peer-reviewed scientific journals such as **Ground Water** and **Ground Water Monitoring Review** (retitled **Ground Water Monitoring and Remediation** beginning in 1993). Most conference proceedings (ASTM conferences being an exception) are not peer-reviewed, and consequently there is more likely to be diversity of opinion concerning conclusions or recommendations in individual papers. When non-peer-reviewed papers are considered, greater weight can be given to those written by individuals from academic institutions or research-oriented government agencies (U.S. Geological Survey, personnel from EPA research laboratories) vis-a-vis papers written by manufacturers or consultants who might have an interest in promoting a particular method. On the other hand, papers written by individuals from academic institutions and more research-oriented government agencies, such as the U.S. Geological Survey, that describe new techniques are more likely to be in developmental stages and not readily available for routine field use. Finally, more recently published papers can generally be given greater weight than earlier publications because they are more likely to address recent developments and advances in investigation techniques. As a general rule, review of multiple references from a variety of sources that deal with a specific method should help determine its appropriateness for a specific application or for specific site conditions. When in doubt, one or more experts should be consulted.

APPENDIX C REFERENCES

Acker, W.L. 1974. Basic Procedures for Soils Sampling and Core Drilling. Acker Drill Co., Scranton, PA.

Aller, L., et al. 1991. Handbook of Suggested Practices for the Design and Installation of Ground-Water Monitoring Wells. EPA/600/4-89/034, 221 pp. Available from CERI.* (Also published in 1989 by National Water Well Association, Dublin, OH, in its NWWA/EPA series, 398 pp.) (Nielsen and Schalla [1991] contain a more updated version of the material in this handbook that is related to design and installation of ground-water monitoring wells.)

American Petroleum Institute (API). 1987. Manual of Sampling and Analytical Methods for Petroleum Hydrocarbons in Groundwater and Soil. API Publication No. 4449, API, Washington, DC, 230 pp.

American Petroleum Institute (API). 1992. Sampling and Analysis of Gasoline Range Organics in Soil. API Publication 4516, API, Washington, DC, 132 pp.

American Public Health Association (APHA). 1992. Standard Methods for the Examination of Water and Wastewater, 18th edition APHA, Washington, DC, 1644 pp. [Comprehensive compilation of analytical methods for measurement of metals, inorganic nonmetallics, and organic constituents in water samples]

American Society for Testing and Materials (ASTM). Annual. Books of ASTM Standards: Construction (Soil and Rock), Volume 04.08; Water and Environmental Technology, Volumes 11.01 and 11.02 (Water) and 11.04 (Pesticides, Resource Recovery, Hazardous Substances and Oil Spill Response, Waste Management, Biological Effects). ASTM, Philadelphia, PA. [Volume 4.08 contains most standards related to soil, ground-water, and vadose zone investigations]

American Society for Testing and Materials (ASTM). 1992a. ASTM Standards on Ground Water and Vadose Zone Investigations. ASTM, Philadelphia, PA, 162 pp. [19 ASTM test methods and guides]

ASTM Institute for Standards Research (ASTM-ISR). 1992b. Index of ASTM Standards and Special Technical Publications Applicable to Environmental Monitoring and Management. ASTM-ISR, Philadelphia, PA, 64 pp.

Barcelona, M.J., J.P. Gibb, and R.A. Miller. 1983. A Guide to the Selection of Materials for Monitoring Well Construction and Ground-Water Sampling. ISWS Contract Report 327, Illinois State Water Survey, Champaign, IL.

Barcelona, M.J., J.P. Gibb, J.A. Helfrich, and E.E. Garske. 1985. Practical Guide for Ground-Water Sampling. EPA/600/2-85/104 (NTIS PB86-137304). (Also published as ISWS Contract Report 374, Illinois State Water Survey, Champaign, IL.) [Covers QA/QC procedures, analyte selection, drilling methods, monitoring well design, well development, sampling, and recommended sampling protocols]

Barnett, P.R. and E.C. Mallory, Jr. 1971. Determination of Minor Elements in Water by Emission Spectroscopy. U.S. Geological Survey Techniques of Water Resources Investigations, TWRI 5-A2, 31 pp.

Barrett, J., et al. 1980. Procedures Recommended for Overburden and Hydrologic Studies of Surface Mines. GTR-INT-71, U.S. Forest Service, Intermountain Forest and Experiment Station, Ogden, UT, 106 pp.

Barth, D.S. and T.H. Starks. 1985. Sediment Sampling Quality Assurance User's Guide. EPA/600/4-85/048 (NTIS PB85-233542).

Barth, D.S., B.J. Mason, T.H. Starks, and K.W. Brown. 1989. Soil Sampling Quality Assurance User's Guide, 2nd edition. EPA/600/8-89/046 (NTIS PB89-189864), 225+ pp.

Beck, R., B. Aboba, D. Miller, and I. Kaklins. 1981. Monitoring to Detect Groundwater Problems Resulting from Enhanced Oil Recovery. EPA/600/2-81/241 (NTIS PB82-119074), 146 pp.

Berg, E.L. 1982. Handbook for Sampling and Sample Preservation of Water and Wastewater, 2nd edition. EPA/600/4-82/029 (NTIS PB83-124503), 414 pp. (Replaces report with the same title by Huibregste and Mover, EPA/600/4-76/049.) [One chapter covers sampling of ground water and another covers sampling/preservation and storage considerations for trace organics]

Bitton, G. and C. P. Gerba (eds.). 1984. Groundwater Pollution Microbiology. Wiley-Interscience, New York, NY. [Paper by McNabb and Mallard details methods for obtaining uncontaminated subsurface samples for microbiological analysis]

Blume, L.J., et al. 1991. Handbook of Methods for Acid Deposition Studies, Laboratory Analyses for Soil Chemistry. EPA/600/4-

90/023 (NTIS PB91-218016). [Nine authors; Includes: sample processing and rock fragment determination, bulk density, field/lab pH, organic matter, particle size, cation exchange capacity, and exchangeable/extractable ions/anions]

Board, R.G. and D.W. Lovelock. 1973. Sampling-Microbiological Monitoring of Environments. Academic Press, New York, NY.

Booth, R.L. 1979. Handbook for Analytical Quality Control in Water and Wastewater Laboratories. EPA/600/4-79/019 (NTIS PB297-451), 157 pp.

Bordner, R., J. Winters, and P. Scarpino. 1978. Microbiological Methods for Monitoring the Environment: Water and Wastes. EPA/600/8-78/017 (NTIS PB290-329).

Boulding, J.R. 1991. Description and Sampling of Contaminated Soils: A Field Pocket Guide. EPA/625/12-91/002, 122 pp. Available from CERI.*

Brakensiek, D.L., H.B. Osborn, and W.J. Rawls (eds.). 1979. Field Manual for Research in Agricultural Hydrology. Agricultural Handbook No. 224, U.S. Department of Agriculture, Washington, DC. [6 Chapters cover: precipitation, runoff, climate, sedimentation, geology, and soil conditions and watershed characteristics]

Britton, L.J. and P.E. Greeson (eds.). 1989. Methods for Collection and Analysis of Aquatic Biological and Microbiological Samples. U.S. Geological Survey Techniques of Water Resources Investigations, TWRI 5-A4, 363 pp. (Supersedes Greeson et al., 1977.)

Brown, E., M.W. Skougstad, and M.J. Fishman. 1970. Methods for Collection and Analysis of Water Samples for Dissolved Minerals and Gases. U.S. Geological Survey Techniques of Water Resource Investigations, TWRI 5-A1. (Superseded by Fishman and Friedman, 1989.)

Brown, R.H., A.A. Konoplyantsev, J. Ineson, and V.S. Kovalensky. 1983. Ground-Water Studies: An International Guide for Research and Practice. Studies and Reports in Hydrology No. 7, UNESCO, Paris. (Originally published in 1972, with supplements added in 1973, 1975, 1977, and 1983.) [Comprehensive guide covering all aspects of ground-water characterization]

Brown, K.W., R.P. Breckinridge, and R.C. Rope. 1991. Soil Sampling Reference Field Methods. U.S. Fish and Wildlife Service Lands Contaminant Monitoring Operations Manual, Appendix J. Prepared by Center for Environmental Monitoring and Assessment, Idaho National Engineering Laboratory, Idaho Falls, ID, 83415. (Final publication pending revisions resulting from field testing of manual.)

Bureau of Reclamation. 1974. Earth Manual, 2nd edition. U.S. Department of the Interior, Bureau of Reclamation, Denver, CO. (First three chapters reprinted in 1990, 326 pp.; remaining chapters superseded by 1990 3rd edition.)

Bureau of Reclamation. 1981. Ground Water Manual--A Water Resources Technical Publication, 2nd edition. U.S. Department of the Interior, Bureau of Reclamation, Denver, CO. [Focuses on test methods for characterizing aquifer properties]

Bureau of Reclamation. 1990. Earth Manual, 3rd edition, Part 2. U.S. Department of the Interior, Bureau of Reclamation, Denver, CO, 1270 pp. (Part 1 consists of a 1990 reprint of the first three chapters of the 1974 2nd edition.)

Cameron, R.E. 1991. Guide to Site and Soil Description for Hazardous Waste Sites. EPA/600/4-91/029 (NTIS PB92-146158).

Cameron, R.E., G.B. Blank, and D.R. Gensel. 1966. Sampling and Handling of Desert Soils. Technical Report No. 32-908, Jet Propulsion Laboratory, California Institute of Technology, Pasadena, CA, 37 pp.

Classen, H.C. 1982. Guidelines and Techniques for Obtaining Water Samples that Accurately Represent the Water Chemistry of the Aquifer. U.S. Geological Survey Open File Report 82-1024, 49 pp.

Cochran, R. and V. Hodge (eds.). 1985. Guidance on Remedial Investigations Under CERCLA. EPA/540/G-85/002 (NTIS PB85-238616), 172 pp.

Collins, A.G. and A.I. Johnson (eds.). 1988. Ground-Water Contamination: Field Methods. ASTM STP 963, American Society for Testing and Materials, Philadelphia, PA. [37 papers]

Connecticut Environmental Protection Agency. 1983. Ground-Water Monitoring Guidelines for Hazardous Waste Management Facilities. Hazardous Management Unit of Water Compliance Unit, Connecticut Environmental Protection Agency, Hartford, CT, 20 pp.

Conway, R.A. and W.P. Gulledge (eds.). 1982. Hazardous and Industrial Solid Waste Testing: Second Symposium. ASTM STP 805, American Society for Testing and Materials, Philadelphia, PA.

Conway, R.A. and B.C. Malloy (eds.). 1981. Hazardous Solid Waste Testing: First Conference. ASTM STP 760, American Society for Testing and Materials, Philadelphia, PA.

Corps of Engineers. 1972. Soil Sampling. EM 1110-2-1907, Corps of Engineers, Department of the Army, Washington, DC.

Costerton, J.W. and R.R. Colwell (eds.). 1979. Native Aquatic Bacteria: Enumeration, Activity, and Ecology. ASTM STP 695, American Society for Testing and Materials, Philadelphia, PA. [Contains five papers on methods for direct enumeration of aquatic bacteria, five papers on chemical indices of aquatic bacterial populations, and six papers on metabolic potentials of aquatic bacterial populations as indicated by activity measurements]

Council on Soil Testing and Plant Analysis. 1992. Reference Methods for Soil Analysis. Council on Soil Testing and Plant Analysis, Georgia University Station, Athens, GA. (Complete revision of 1980 Handbook on Reference Methods for Soil Testing; oriented towards agricultural applications.)

Crouch, R.L., R.D. Eckert, and D.D. Rugg. 1976. Monitoring Groundwater Quality: Economic Framework and Principles. EPA/600/4-76/045 (NTIS PB260-919), 107 pp.

Dames & Moore. 1974. Manual of Ground-Water Practices. (Cited in Waste Management of North America [1991].)

deVera, E.R. 1980. Samplers and Sampling Procedures for Hazardous Waste Streams. EPA/600/2-80/018 (NTIS PB80-135353).

Devinny, J.S., L.R. Everett, J.C.S. Lu, and R.L. Stollar. 1990. Subsurface Migration of Hazardous Wastes. Van Nostrand Reinhold, New York, NY. [Includes chapters on ground-water monitoring, soil core monitoring, and soil pore-liquid monitoring]

Devitt, D.A., R.B. Evans, W.A. Jury, T.H. Starks, and B. Eklund. 1987. Soil Gas Sensing for Detection and Mapping of Volatile Organics. EPA/600/8-87/036 (NTIS PB87-228516).

Driscoll, F.G. 1986. Groundwater and Wells, 2nd edition. Johnson Filtration Systems Inc., St. Paul, MN, 1089 pp. (First edition Johnson, UOP, 1966.) [Comprehensive text of ground investigation methods, well design and construction]

Dunlap, W.J., J.F. McNabb, M.R. Scalf, and R.L. Cosby. 1977. Sampling for Organic Chemicals and Microorganisms in the Subsurface. EPA/600/2-77/176 (NTIS PB272 679).

Edgill, K.W. 1989. USEPA Method Study 36 SW-846 Methods 8270/3510 GC/MS Method for Semivolatile Organics: Capillary Column Technique; Separatory Funnel Liquid-Liquid Extraction. EPA/600/4-89/010 (NTIS PB89-190581).

Edgill, K.W. and D.M. Wilbers. 1989. USEPA Method Study 38 SW-846 Method 3010 Acid Digestion of Aqueous Samples and Extracts for Total Metals for Analysis by Flame Atomic Absorption Spectroscopy. EPA/600/4-89/011 (NTIS PB89-181945).

Edwards, T.K. and G.D. Glysson. 1988. Methods for Measurement of Fluvial Sediment. U.S. Geological Survey Open File Report 86-531, 118 pp.

EG&G Idaho, Inc. 1990. Environmental Monitoring for Low-Level Waste-Disposal Sites, Revision 2 (2 Volumes). Low-Level Radioactive Waste Management Handbook Series, DOE/LLW-13Tg, National Low Level Waste Management Program, Idaho Falls, ID.

Engel, T.M., R.A. Kornfeld, J.S. Warner, and K.D. Andrews. 1988. Screening for Semivolatile Organic Compounds for Extractability and Aqueous Stability by SW-846 Method 3510. EPA/600/4-88/005 (NTIS PB88-161559).

Everett, L.G. (ed.). 1979. Groundwater Quality Monitoring of Western Coal Strip Mining: Identification and Priority Ranking of Potential Pollution Sources. EPA/600/7-79/024 (NTIS PB293-457), 265 pp.

Everett, L.G. 1980. Ground-Water Monitoring. General Electric Company Technology Marketing Operations, Schenectady, NY, 440 pp.

Everett, L.G. 1983. Groundwater Quality Monitoring Recommendations for Western Surface Coal Mines. EPA/600/4-83/057 (NTIS PB84-124619), 154 pp.

Everett, L.G. 1985. Groundwater Monitoring Handbook for Coal and Oil Shale Development. Elsevier, New York, NY.

Everett, L.G. and E.W. Hoylman (eds.). 1980a. Groundwater Quality Monitoring of Western Coal Strip Mining: Preliminary Designs for Reclaimed Mine Sources of Pollution. EPA/600/7-80/109 (NTIS PB80-203193), 50 pp.

Everett, L.G. and E.W. Hoylman (eds.). 1980b. Groundwater Quality Monitoring of Western Coal Strip Mining: Preliminary Designs for Active Mine Sources of Pollution. EPA/600/7-80/110 (NTIS PB80-220502).

Everett, L.G., K.D. Schmidt, R.M. Tinlin, and D.K. Todd. 1976. Monitoring Groundwater Quality: Methods and Costs. EPA/600/4-76/023 (NTIS PB257 133). [Covers ground-water-related measuring techniques applicable to the land surface, topsoil, vadose zone, and zone of saturation; includes cost data on various methods]

Everett, L.G., L.G. Wilson, and E.W. Hoylman. 1983. Vadose Zone Monitoring for Hazardous Waste Sites. EPA/600/X-83/064 (NTIS PB84-212752). (Also published in 1984 by Noyes Data Corporation, Park Ridge, NJ.)

Fenn, D., E. Cocozza, J. Isbister, O. Braids, B. Yare, and P. Roux. 1977. Procedures Manual for Ground Water Monitoring at Solid Waste Disposal Facilities. EPA/530/SW-611 (NTIS PB84-174820), 283 pp. [Covers monitoring networks, monitoring and well technology, chemical parameters for indicators of leachate, and sampling]

Fishman, M.J. and W.L. Bradford. 1982. A Supplement to Methods for the Determination of Inorganic Substances in Water and Fluvial Sediments. U.S. Geological Survey Open-File Report 82-272. (Superseded by Fishman and Friedman, 1989.)

Fishman, M.J. and L.C. Friedman (eds.). 1989. Methods for Determination of Inorganic Substances in Water and Fluvial Sediments, 3rd edition. U.S. Geological Survey Techniques of Water Resources Investigations, TWRI 5-A1, 545 pp. (Supersedes Brown et al. [1970], Skougstad et al. [1979], and Fishman and Bradford [1982].)

Ford, P.J. and P.J. Turina. 1985. Characterization of Hazardous Waste Sites--A Methods Manual, Vol. I: Site Investigations. EPA/600/4-84/075 (NTIS PB85-215960). [Section 7 covers field investigations. Appendices contains useful forms and checklists]

Ford, P.J., P.J. Turina, and D.E. Seely. 1984. Characterization of Hazardous Waste Sites--A Methods Manual, Vol. II: Available Sampling Methods, 2nd edition. EPA/600/4-84/076 (NTIS PB85-521596). [Covers sampling methods for solids, gases, and liquids]

Fresenius, W., K.E. Quentin, and W. Schneider (eds.). 1988. Water Analysis: A Practical Guide to Physico-Chemical and Microbiological Water Examination and Quality Assurance. Springer-Verlag, New York, NY.

Fried, J.J. 1975. Groundwater Pollution: Theory, Methodology, Modeling and Practical Rules. Elsevier, New York, NY, 330 pp.

Friedman, L.C. and D.E. Erdmann. 1982. Quality Assurance Practices for the Chemical and Biological Analyses of Water and Fluvial Sediments. U.S. Geological Survey Techniques of Water Resources Investigations, TWRI 5-A6, 181 pp.

GeoTrans. 1989. Groundwater Monitoring Manual for the Electric Utility Industry. Edison Electric Institute, Washington, DC.

Gillham, R.W., M.J.L. Robin, J.F. Barker, and J.A. Cherry. 1983. Groundwater Monitoring and Sample Bias. API Publication 4367, American Petroleum Institute, Washington, DC. [Examines chemical characteristics of inorganic and organic parameters, sampling installations, sample collection, and methods]

Goerlitz, D.F. and E. Brown. 1972. Methods for Analysis of Organic Substances in Water. U.S. Geological Survey Techniques of Water Resources Investigations, TWRI 5-A3. (Updated by Wershaw et al. [1987]).

Goodwin, B.E., J.R. Aronson, R.P. O'Neil, M.A. Randel, and E.M. Smith. 1982. Surface Sample Techniques. USATHAMA DRXTH-TE-CR-82179, U.S. Army Toxic and Hazardous Materials Agency, Aberdeen Proving Ground, MD, 91 pp. [Includes annotated bibliography with 47 citations]

Greeson, P.E., T.A. Ehlke, G.A. Irwin, B.W. Lium, and K.V. Slack (eds.). 1977. Methods for Collection and Analysis of Aquatic Biological and Microbiological Samples. U.S. Geological Survey Techniques of Water Resources Investigations, TWRI 5-A4, 332 pp. (Updated by Britton an Greeson [1989])

Guy, H.P. 1969. Laboratory Theory and Methods for Sediment Analysis. U.S. Geological Survey Techniques of Water-Resources Investigations, TWRI 5-C1, 58 pp.

Hach Company. 1991. Handbook for Waste Analysis, 2nd edition. Hach Company, Loveland, CO, 166 pp. [Methods for use of field kits for 14 elements and 6 solids residue tests]

Hatayama, H.K., J.J. Chen, E.R. de Vera, R.D. Stephens, and D.L. Storm. 1980. A Method for Determining the Compatibility of Hazardous Wastes. EPA/600/2-80/076 (NTIS PB80-221005), 149 pp.

Ho, L.V., R.D. Morrison, C.J. Schmidt, and J.R. Marsh. 1978. Monitoring of Wastewater and Sludge Application Systems. SCS Engineers, Long Beach, CA, 303 pp.

Hodgson, J.M. 1978. Monograph on Soil Survey, Soil Sampling and Soil Description. Oxford University Press, New York, NY, 241 pp.

Holden, P.W. 1984. Primer on Well Water Sampling for Volatile Organic Compounds. Water Resources Research Center, University of Arizona, Tucson, AZ.

Howsam, P. (ed.). 1990. Proceedings of International Groundwater Engineering Conference on Water Wells: Monitoring, Maintenance, and Rehabilitation. Chapman and Hall, London, 422 pp.

Hvorslev, M.J. 1948. Subsurface Exploration and Sampling of Soils. Engineering Foundation, New York, NY.

Hvorslev, J.J. 1949. Subsurface Exploration and Sampling of Soils for Civil Engineering Purposes. U.S. Army Engineers Waterways Experiment Station, Vicksburg, MS. (Reprinted by the Engineering Foundation in 1962 and 1965.)

Jackson, L.P., A.R. Rohlik, and R.A. Conway (eds.). 1984. Hazardous and Industrial Waste Management and Testing: 3rd Symposium. ASTM STP 851, American Society for Testing and Materials, Philadelphia, PA.

Johnson, UOP. 1966. Ground Water and Wells. (See, Driscoll [1986].)

Keith, L.H. (ed.). 1988. Principles of Environmental Sampling. ACS Professional Reference Book, American Chemical Society, Washington, DC, 480 pp. [30 contributed chapters on principles of environmental sampling covering: (1) general planning and sample design, (2) quality assurance and quality control, (3) sampling waters, (4) sampling air and stacks, (5) sampling biota, and (6) sampling solids, sludges and liquid wastes]

Keith, L.H. 1992. Environmental Sampling and Analysis: A Practical Guide. Lewis Pubishers, Chelsea, MI, 143 pp. (In cooperation with ACS Committee on Environmental Improvement.)

Kerfoot, H.B. and L.J. Barrows. 1987. Soil-Gas Measurement for Detection of Subsurface Organic Contamination. EPA/600/2-87/027 (NTIS PB87-174884).

Klute, A. (ed.). 1986. Methods of Soil Analysis, Part 1: Physical and Mineralogical Methods, 2nd edition. Agronomy Monograph No. 9, American Society of Agronomy, Madison, WI, 1188 pp. (1965 1st edition was edited by C.A. Black.) [50 chapters covering field and laboratory methods]

Kopp, J.F. and G.D. McKee. 1983. Methods for Chemical Analysis of Water and Wastes, 3rd edition. EPA/600/4-74/020 (NTIS PB84-128677). (Supersedes report with the same title dated 1979.) [chemical analytical procedures used in U.S. EPA laboratories for examining ground and surface water, domestic and industrial waste effluents, and treatment process samples]

Korte, N.W. and P.M. Kearl. 1985. Procedures for the Collection and Preservation of Ground Water and Surface Water Samples and for the Installation of Monitoring Wells, 2nd edition. U.S. Department of Energy Technical Measurements Center Report GJ/TMC-08 (NTIS DE86-006184), 68 pp.

Lesage, S. and R.E. Jackson (eds.). 1992. Groundwater Contamination and Analysis at Hazardous Waste Sites. Environmental Science and Pollution Control Series/4, Marcel Dekker, New York, NY, 552 pp.

Lindorff, D.E., J. Feld, and J. Connelly. 1987. Groundwater Sampling Procedures Guidelines. Wisc. Dept. Nat. Resources Rept. PUBL-WR-153, WDNR, Madison, WI.

Loftis, J.C. and R.C. Ward. 1979. Regulatory Water Quality Monitoring Networks-Statistical and Economic Considerations. EPA/600/4-79/055 (NTIS PB80-140882).

Long, S.E. and T.D. Martin. 1989. Methods for the Determination of Inorganic Compounds in Drinking Water: Methods 300.0 and 200.8. (NTIS PB90-215021), U.S. Environmental Protection Agency Environmental Monitoring Systems Laboratory, Cincinnati, OH, 158 pp.

Longbottom, J.E. and J.J. Lichtenberg. 1982. Methods for Organic Chemical Analysis of Municipal and Industrial Wastewater. EPA/600/4-82/057 (NTIS PB83-201798). [Describes tests for 15 groups of organic chemicals and includes an appendix defining procedures for determining the detection limit of an analytic methods; the test procedures in this manual are cited in Table IC (organic chemical parameters) and 1D (pesticide parameters) in 40 CFR 136.3(a)]

Lorenzen, D., R.A. Conway, L.P. Jackson, A. Hamza, C.L. Perket, and W.J. Lacy (eds.). 1986. Hazardous and Industrial Solid Waste Testing and Disposal: 6th Volume. ASTM STP 933, American Society for Testing and Materials, Philadelphia, PA.

Mason, B.J. 1992. Preparation of Soil Sampling Protocols: Sampling Techniques and Strategies. EPA/600/R-92/128 (NTIS PB92-220532). (Supersedes 1983 edition titled, Preparation of Soil Sampling Protocol: Techniques and Strategies, EPA/600/4-03/020 [NTIS PB83-206979], 102 pp.)

McKeague, J.A. (ed.). 1978. Manual on Soil Sampling and Methods of Analysis, 2nd edition. Canadian Society Soil Science, Ottawa, Ontario.

Mooij, H. and F.A. Rovers. 1976. Recommended Groundwater and Soil Sampling Procedures. EPS-4-EC, Environmental Protection Service, Canada.

Morrison, R.D. 1983. Groundwater Monitoring Technology. Timco Mfg., Inc., Prairie du Sac, WI, 105 pp. [Guide to vadose zone and ground-water sampling methods; sections on use of Teflon for suction lysimeters and casing for monitoring wells are out of date; see Sections 9.2.1 and A.1 in this guide for more current information]

Mueller, W. and D.L. Smith (Compilers). 1991. Compilation of EPA's Sampling and Analysis Methods. Lewis Publishers, Chelsea, MI, 465 pp. (On diskette: EPA's Sampling and Analysis Methods Database, Vol. 1 [Industrial Chemicals], Vol. 2 [Pesticides, Herbicides, Dioxins and PCBs], and Vol. 3 [Elements and Water Quality Parameters].) [Summary information on more than 150 EPA-approved, and a total of 650, sampling and analysis methods for industrial chemicals, pesticides, elements, and water quality parameters]

Nash, R.G. and A.R. Leslie (eds.). 1991. Groundwater Residue Sampling Design. ACS Symposium Series 465, American Chemical Society, Washington, DC, 395 pp. [23 papers on ground-water and vadose zone sampling]

Nielsen, D.M. (ed.). 1991. Practical Handbook of Ground Water Monitoring. Lewis Publishers, Chelsea, MI, 717 pp. (Published in cooperation with National Water Well Association, Dublin, OH.) [Covers all aspects of vadose zone and ground-water monitoring]

Nielsen, D.M. and A.I. Johnson (eds.). 1990. Ground Water and Vadose Zone Investigations. ASTM STP 1053, American Society for Testing and Materials, Philadelphia, PA. [22 papers]

Nielsen, D.N. and M.N. Sara (eds.). 1992. Current Practices in Ground Water and Vadose Zone Investigations. ASTM STP 1118, American Society for Testing and Materials, Philadelphia, PA, 431 pp. [28 papers]

Nielsen, D.M. and R. Schalla. 1991. Design and Installation of Ground-Water Monitoring Wells. In: Practical Handbook of Ground-Water Monitoring, D.M. Nielsen (ed.), Lewis Publishers, Chelsea, MI, pp. 239-331.

New Jersey Department of Environmental Protection (NJDEP). 1988. Field Sampling Procedures Manual. Hazardous Waste Program, NJDEP, Trenton, NJ.

Noblett, J.G. and J.M. Burke. 1990. FGD Chemistry and Analytical Methods Handbook, 1: Process Chemistry--Sampling, Measurement, Laboratory, and Process Performance Guidelines, Revision 1. EPRI CS-3612, Electric Power Research Institute, Palo Alto, CA. (Originally published in 1984. See Radian Corporation [1988] for Volume 2.) [Covers sampling, measurement, and laboratory and process performance guidelines]

Oudjik, G. and K. Mujica. 1989. Handbook for Identification, Location and Investigation of Pollution Sources Affecting Ground Water. National Water Well Association, Dublin, OH, 185 pp.

Page, A.L., R.H. Miller, D.R. Keeney (eds.). 1982. Methods of Soils Analysis, Part 2--Chemical and Microbiological Properties, 2nd edition. ASA Monograph 9, American Society of Agronomy, Madison, WI. [54 chapters]

Palmer, M. 1985. Methods Manual for Bottom Sediment Sample Collection. EPA/905/4-85/004 (NTIS PB86-107414), 52 pp.

Perket, C.L. (ed.). 1986. Quality Control in Remedial Site Investigation: Hazardous and Industrial Solid Waste Testing, 5th Volume. ASTM STP 925, American Society for Testing and Materials, Philadelphia, PA.

Petros, Jr., J.K., W.J. Lacy, and R.A. Conway (eds.). 1985. Hazardous and Industrial Solid Waste Testing: 4th Symposium. ASTM STP 886, American Society for Testing and Materials, Philadelphia, PA.

Pfaff, J.D. 1981. Methods for the Determination of Chemical Contaminants in Drinking Water: Instructors Handbook. EPA/430/1-81/023 (NTIS PB81--234312), 179 pp.

Pilie, K., et al. 1975. Methods to Treat, Control, and Monitor Spilled Hazardous Materials. EPA/670/2-75/042 (NTIS PB243-386), 149 pp.

Plumb, Jr., R.H. 1981. Procedures for Handling and Chemical Analysis of Sediment and Water Samples. Technical Report EPA/CE-81/1, U.S. Army Engineer Waterways Experiment Station, Vicksburg, MS, 71 pp.

Plumb, Jr., R.H. 1984. Characterization of Hazardous Waste Sites, A Methods Manual: Vol. III, Available Analytical Methods. EPA/600/4-84/038 (NTIS PB84-191048). [Compendium of analytical procedures for characterization of hazardous wastes sites covering water, soil/sediment, biological tissues, and air samples for EPA listed hazardous substances]

Radian Corporation. 1988. FGD Chemistry and Analytical Methods Handbook, 2: Chemical and Physical Test Methods, Revision 1. EPRI CS-3612, Electric Power Research Institute, Palo Alto, CA. (Originally published in 1984. See Noblett and Burke [1990] for Volume 1.) [Presents 54 physical-testing and chemical-analysis methods for FGD reagents, slurries, and solids]

Rainwater, F.H. and L.L. Thatcher. 1960. Methods for Collection and Analysis of Water Samples. U.S. Geological Survey Water-Supply Paper 1454. [Describes types of methods, choice of analytical methods for water samples, and specific analytical procedures for over 40 inorganic water parameters]

Redwine, J., et al. 1985. Groundwater Manual for the Electric Utility Industry, Volume 3: Groundwater Investigations and Mitigation Techniques. EPRI CS-3901, Electric Power Research Institute, Palo Alto, CA.

Rehm, B.W., T.R. Stolzenburg, and D.G. Nichols. 1985. Field Measurement Methods for Hydrogeologic Investigations: A Critical Review of the Literature. EPRI EA-4301, Electric Power Research Institute, Palo Alto, CA. [Comprehensive review of methods for solids, unsaturated zone, and ground-water physical and chemical characterization; bibliography contains over 600 references on these topics]

Rijtema, P.E. and H. Wassink (eds.). 1969. Water in the Unsaturated Zone (Proc. Wageningen Symp.), 2 Vols. IASH-UNESCO Studies and Reports in Hydrology 2, UNESCO, Paris, Vol. 1: pp. 1-156, Vol. 2: pp. 527-944. (Also published as IAHS Publication Nos. 82 and 83.)

Ross, R.R. and J.W. Keeley. 1992. General Methods for Remedial Operations Performance Evaluations. EPA/600/R-92/002, 37 pp.

Rosswall, T. (ed.). 1973. Modern Methods in the Study of Microbial Ecology. Bulletins from the Ecological Research Committee, Swedish Natural Science Research Council, Stockholm, 17. [Includes about 80 papers and short communications presented at a Symposium held at Uppsala, Sweden in 1972; major sessions included: (1) Techniques for the observation of microcosms in soil and water; (2) isolation and characterization of microorganisms; (3) techniques for the determination of microbial activity in relation to ecological investigations; (4) estimation of microbial growth rates under natural conditions; (5) model systems; and (6) mathematical models and systems analysis in microbial ecology]

Santa Clara County Water District. 1985. Groundwater Monitoring Guidelines. Santa Clara County, CA, 58 pp.

Scalf, M.R., J.F. McNabb, W.J. Dunlap, R.L. Cosby, and J. Fryberger. 1981. Manual of Ground-Water Quality Sampling Procedures. EPA/600/2-81/160 (NTIS PB82-103045). (Also published in NWWA/EPA Series, National Water Well Association, Dublin OH.) [Covers drilling methods, collection of ground-water samples, and field tests and preservation, with a short chapter on sampling subsurface solids]

Schweitzer, G.E. and J.A. Santolucito (eds.). 1984. Environmental Sampling for Hazardous Wastes. ACS Symp. Series 267, American Chemical Society, Washington, DC, 130 pp. [13 papers focusing on soil contamination]

Sharma, J. 1979. Manual of Analytical Quality Control for Pesticides and Related Compounds in Humans and Environmental Samples: A Compendium. EPA/600/1-79/008 (NTIS PB298-711).

Silka, L.R. and T.L. Swearingen. 1978. Manual for Evaluating Contamination Potential of Surface Impoundments. EPA/570/9-78/003 (NTIS PB85-211423).

Silvestri, A., M. Razalis, A. Goodman, P. Vasquez, and A.R. Jones, Jr. 1981. Development of an Identification Kit for Spilled

Hazardous Materials. EPA/600/2-8/194 (NTIS PB82-110727).

Simmons, M.S. 1991. Hazardous Waste Measurements. Lewis Publishers, Chelsea, MI, 315 pp. [14 contributed chapters on sampling, field techniques and instrumentation, toxicity screening methods for hazardous waste, and quality assurance/quality control]

Sisk, S.W. 1981. NEIC Manual for Groundwater/Subsurface Investigations at Hazardous Waste Sites. EPA/330/9-81/002 (NTIS PB82-103755), 213 pp. [Appendix on information sources is especially useful]

Skoog, D.A. 1985. Principles of Instrumental Analysis, 3rd edition. Saunders College Publishing, Philadelphia, PA.

Skougstad, M.W., et al. (eds.). 1979. Methods for Determination of Inorganic Substances in Water and Fluvial Sediments, 2nd edition. U.S. Geological Survey Techniques of Water Resources Investigations, TWRI 5-A1, 626 pp. (Superseded by Fishman and Friedman, 1989.)

Slawson, G.C. (ed.). 1979. Groundwater Quality Monitoring of Western Oil Shale Development: Identification and Priority Ranking of Potential Pollution Sources. EPA/600/7-79/023 (NTIS PB300-536), 241 pp.

Slawson, G.C. (ed.). 1980a. Groundwater Quality Monitoring of Western Oil Shale Development: Monitoring Program Development. EPA/600/7-80/089 (NTIS PB80-203219), 200 pp.

Slawson, G.C. (ed.). 1980b. Monitoring Groundwater Quality: The Impact of In-situ Oil Shale Retorting. EPA/600/7-80/132 (NTIS PB81-177453), 300 pp.

Smith, K.A. (ed.). 1991. Soil Analysis: Modern Instrumental Methods, 2nd edition. Marcell Dekker, New York, NY. [14 chapters]

Smith, K.A. and C.E. Mullins. 1991. Soil Analysis: Physical Methods. Marcel Dekker, New York, NY, 620 pp.

Soil Conservation Service (SCS). 1971. Handbook of Soil Survey Investigations Procedures. SCS, Washington, DC, 98 pp.

Soil Conservation Service (SCS). 1984. Procedures for Collecting Soil Samples and Methods of Analysis for Soil Survey. Soil Survey Investigations Report No. 1, U.S. Government Printing Office. (Supersedes 1972 report with same document number titled Soil Survey Laboratory Methods and Procedures for Collecting Soil Samples.) [Laboratory analytical methods for soil physical and chemical properties]

Stephens, E. 1986. Procedures for Conducting a Comprehensive Ground Water Monitoring Evaluation of Hazardous Waste Disposal Facilities. California Department of Health Services, Sacramento, CA, 52 pp.

Summers, K.V. and S.A. Gherini. 1987. Sampling Guidelines for Groundwater Quality. EPRI EA-4952, Electric Power Research Institute, Palo Alto, CA.

Thatcher, L.L., V.J. Janzer, and K.W. Edwards. 1977. Methods for Determinations of Radioactive Substances in Water and Fluvial Sediments. U.S. Geological Survey Techniques of Water Resources Investigations, TWRI 5-A5, 95 pp.

Thompson, C.M., et al. 1989. Techniques to Develop Data for Hydrogeochemical Models. EPRI EN-6637, Electric Power Research Institute, Palo Alto, CA, 371 pp. [Overview of hydrologic, physical, and chemical characterization techniques to develop data for hydrogeochemical models; contains summary description of methods for elemental analysis, analysis of anionic species, inorganic and organic carbon, redox sensitive species, and other chemical parameters, along with recommendations for methods best suited for obtaining data for hydrochemical modeling]

Tinlin, R.M., (ed.) 1976. Monitoring Groundwater Quality: Illustrative Examples. EPA/600/4-76/036 (NTIS PB257 936). [Nine case studies illustrating procedures for monitoring various classes of ground-water pollution sources]

Todd, D.K., R.M. Tinlin, K.D. Schmidt, and L.G. Everett. 1976. Monitoring Ground-Water Quality: Monitoring Methodology. EPA/600/4-76/026 (NTIS PB256-068). [15-step procedure]

Topp, G.C., W.D. Reynolds, and R.E. Green (eds.). 1992. Advances in Measurement of Soil Physical Properties: Bringing Theory into Practice. SSSA Special Publication 30, Soil Science Society of America, Madison, WI, 304 pp.

UNESCO. 1983. Proceedings of the Symposium--Methods and Instrumentation for the Investigation of Groundwater Systems. Committee for Hydrological Research, CHO-TNO, The Hague, The Netherlands. [More than 60 papers]

Unwin, J. 1982. A Guide to Groundwater Sampling. NCPASI Technical Bulletin 362, National Council of the Paper Industry for Air and Stream Improvement, New York, NY.

U.S. Department of Energy (DOE). Various dates. The Environmental Survey Manual. DOE/EH-0053: Vol. 1 (August 1987; Chapter 8, 2nd edition. January 1989—Sampling and Analysis Phase); Vol. 2 (August 1987—Appendices A,B, and C); Vol. 3 (2nd edition. January 1989—Appendix D, Parts 1, 2, and 3; Organic and Inorganic Analysis Methods and Non-Target List Parameters); Vol. 4 (2nd edition. January 1989—Appendix D, Part 4; Radiochemical Analysis Procedures); Vol. 5. (2nd edition. January 1989—Appendices: E, Field Sampling; F, Quality Assurance; G, Decontamination; H, Sample Management; I, Sample Handling, Transport and Documentation; J, Health and Safety; and K, Sampling and Analysis Plan).

U.S. Environmental Protection Agency (EPA). 1981a. Permitting of Land Disposal Facilities: Groundwater and Air Emission Monitoring. EPA/MS-1941.41 (NTIS PB81-246431), 38 pp.

U.S. Environmental Protection Agency (EPA). 1981b. Permitting of Land Disposal Facilities: Groundwater Protection Standard. EPA/MS-1941.40 (NTIS PB81-246423), 39 pp.

U.S. Environmental Protection Agency (EPA). 1983a. Ground-Water Monitoring Guidance for Owners and Operators of Interim Status Facilities, Revisedition. EPA/SW-963-Rev (NTIS DE84-900827; PB83-209445-draft), 190 pp.

U.S. Environmental Protection Agency (EPA). 1983b. Draft RCRA Permit Writer's Manual, Ground-Water Protection, 40 CFR Part 264, Subpart F, 263 pp.

U.S. Environmental Protection Agency (EPA). 1985. RCRA Ground-Water Monitoring Compliance Order Guidance. EPA Office of Solid Waste and Emergency Response (NTIS PB87-193710), 128 pp. [Deals with monitoring violations at interim status land disposal facilities]

U.S. Environmental Protection Agency (EPA). 1986a. RCRA Ground Water Monitoring Technical Enforcement Guidance Document. EPA/530/SW-86/055 (OSWER-9950.1) (NTIS PB87-107751), 332 pp. (Also published in NWWA/EPA Series, National Water Well Association, Dublin, OH. Final OSWER Directive 9950.2 (NTIS PB91-140194). Executive Summary: OSWER 9950.1a (NTIS PB91-140186), 17 pp. See also, U.S. EPA [1986e and 1993].)

U.S. Environmental Protection Agency (EPA). 1986b. Test Methods for Evaluating Solid Waste, 3rd edition. EPA/530/SW-846 (NTIS PB88-239223); First update, 3rd edition. EPA/530/SW-846.3-1 (NTIS PB89-148076). (2nd edition was published in 1982 (NTIS PB87-1200291); current edition and updates available on a subscription basis from U.S. Government Printing Office, Stock #955-001-00000-1. Revised final draft of Chapter 11 (Ground-Water Monitoring System Design, Installation, and Operating Practices contains extensive new guidance.) [Volumes 1A (Metallic Analytes), IB (Organic Analytes), and IC (Miscellaneous Test Methods) cover laboratory methods; Volume II covers field methods (Part IV defines acceptable and unacceptable designs and practice for ground-water monitoring]

U.S. Enviromental Protection Agency (EPA). 1986c. Permit Guidance Manual on Unsaturated Zone Monitoring for Hazardous Waste Land Treatment Units. EPA/530/SW-86/040 (NTIS PB87-215463).

U.S. Environmental Protection Agency (EPA). 1986d. RCRA Facility Assessment Guidance. EPA/530-86/053 (NTIS PB87-107769), 174 pp. (Might also be cited with Rastatter et al. [1986] as authors.) [Chapter 5 covers ground water, Chapter 8 covers subsurface gas, and Chapter 9 covers soils]

U.S. Environmental Protection Agency (EPA). 1986e. Final RCRA Comprehensive Ground-Water Monitoring Evaluation (CME) Guidance Document. Final OSWER Directive 9950.2 (NTIS PB91-140194), 59 pp. [Contains detailed checklist drawing heavily from U.S. EPA (1986a)]

U.S. Environmental Protection Agency (EPA). 1986f. Guidance on Issuing Permits to Facilities Required to Analyze Groundwater for Appendix VIII Constituents. (NTIS PB87-163242).

U.S. Enviromental Protection Agency (EPA). 1987. A Compendium of Superfund Field Operations Methods. EPA/540/P-87/001 (NTIS PB88-181557), 644 pp. [Section 7 covers field methods for rapid screening for hazardous material, Section 8 covers methods for geologic characterization, and Section 15 covers field instrumentation]

U.S. Environmental Protection Agency (EPA). 1988a. Guidance on Remedial Actions for Contaminated Ground Water at Superfund Sites. EPA/540/G-88/003 OSWER Directive 9283.1-2 (NTIS PB89-184618), 180 pp. [Section 7.4 covers performance monitoring]

U.S. Environmental Protection Agency (EPA). 1988b. Field Screening Methods Catalog: User's Guide. EPA/540/2-88/005. FSMC System Coordinator, OERR, Analytical Operations Branch (WH-548-A), U.S. EPA, Washington, DC. (Also available as a computerized information retrieval system.) [Guide for selection of instrumental methods for field screening of inorganic and organic contaminants; covers 26 specific field screening methods]

U.S. Environmental Protection Agency (EPA). 1989a. Guidance for Conducting Remedial Investigations and Feasibility Studies Under CERCLA. EPA/540/G-89/004 (NTIS PB/89-184626), 195 pp.

U.S. Environmental Protection Agency (EPA). 1989b. RCRA Facility Investigation (RFI) Interim Final Guidance, Vol. I: Development of an RFI Work Plan and General Considerations for RCRA Facility Investigations; Vol. II: Soil, Ground Water and Subsurface Gas Releases; Vol. III: Air and Surface Water Releases; Vol. IV: Case Study Examples. EPA/530/SW-89/031 (NTIS PB89-200299), 1221 pp. [Volume II covers investigation of soil, ground water, and subsurface gas releases]

U.S. Environmental Protection Agency (EPA). 1989c. RCRA Sampling Procedures Handbook. U.S. EPA Region VI, Dallas, TX.

U.S. Environmental Protection Agency (EPA). 1989d. Sediment Classification Methods Compendium, Final Draft Report. Office of Water Regulations and Standards, Washington, DC. [Compendium of 10 methods for assessing chemically contaminated sediments]

U.S. Enviromental Protection Agency (EPA). 1990a. Handbook: Ground Water; Volume I: Ground Water and Contamination. EPA/625/6-90/16a, 144 pp. Available from CERI.*

U.S. Environmental Protection Agency (EPA). 1990b. Subsurface Contamination Reference Guide. EPA/540/2-90/011. (NTIS PB91-921292), 26 pp. [Three-Part Guide]

U.S. Environmental Protection Agency. (EPA). 1990c. Manual for Certification of Laboratories Analyzing Drinking Water: Criteria and Procedures Quality Assurance, 3rd edition. EPA/570/9-90/007 (NTIS PB90-220500).

U.S. Environmental Protection Agency (EPA). 1990d. Methods for the Determination of Organic Compounds in Drinking Water, Supplement 1. EPA/600/4-90/020 (NTIS PB91-108266), 225 pp. (Supersedes report with similar title, EPA/600/7-90/XXX [PB90-215039].)

U.S. Enviromental Protection Agency (EPA). 1991a. Site Characterization for Subsurface Remediation. EPA/625/4-91/026, 259 pp. Available from CERI.* [Part I contains nine chapters on methods for subsurface characterization]

U.S. Enviromental Protection Agency (EPA). 1991b. Handbook: Ground Water; Volume II: Methodology. EPA/625/6-90/16b, 141 pp. Available from CERI.*

U.S. Enviromental Protection Agency (EPA). 1991c. Methods for the Determination of Metals in Environmental Samples. EPA/600/4-91/010 (NTIS PB91-231498), 305 pp. [Covers 13 laboratory analytical methods for 35 metals]

U.S. Environmental Protection Agency (EPA). 1991d. Methods for the Determination of Organic Compounds in Drinking Water, Revisedition. EPA/600/4-88/039 (NTIS PB91-231480), 395 pp. (Supersedes 1988 publication with same title and EPA document number [NTIS PB89-220461].)

U.S. Environmental Protection Agency (EPA). 1993. RCRA Ground Water Monitoring: Draft Technical Guidance. EPA/530/R-93/001 (NTIS PB93-139350).

U.S. Geological Survey (USGS). 1977+. National Handbook of Recommended Methods for Water Data Acquisition. USGS Office of Water Data Coordination, Reston, VA. [Individual chapters have come out at different dates; pertinent chapters include: (2) Ground Water (1980); (4) Biological and Microbiological Quality of Water (1983); (5) Chemical Quality (1982); and (6) Soil Water (1982)]

van Duijvenbooden, W. and H.G. van Waegeningh (eds.). 1987. Vulnerability of Soil and Groundwater to Pollutants. Committee for Hydrological Research, CHO-TNO, The Hague, The Netherlands. [Contains a number of papers on soil and groundwater monitoring strategies and vulnerability mapping]

Wagner, R.E. (edition.). 1992. Guide to Environmental Analytical Methods. Genium Publishing, Schenectady, NY. [Summary/comparisons of methods in: EPA CLP SOW (Inorganics/Organics Analyses), EPA 200 series (water and wastes), EPA 500 series (organic compounds in drinking water), EPA 600 series 40 CFR Part 136, EPA/SW-846 (solid waste), and APHA (1990--17th edition)]

Wallace, J.R., L. Alden, F.S. Bonom, J. Nichols, and E. Sexton. 1984. Method of Chemical Analysis of Oil Shale Wastes. EPA/600/2-84/110 (NTIS PB84-211226), 250 pp.

Warren-Hicks, W., B.R. Parkhurst, and S.S. Baker, Jr. 1989. Ecological Assessment of Hazardous Waste Sites: A Field and Laboratory Reference. EPA/600/3-89/013 (NTIS PB89-205967). [Covers toxicity tests, biomarkers, and ecological field assessments]

Waste Management of North America. 1991. Site Assessment Manual. Waste Management, Inc., Oak Brook, IL. (Earlier edition published in 1989.)

Watts, R.R. (edition.). 1980. Manual of Analytical Methods for the Analysis of Pesticides in Humans and Environmental Samples. EPA/600/8-80/38 (NTIS PB82-208752).

Weiss, R.B., T.O. Coffee, and T.L. Williams. 1979. Geothermal Environmental Impact Assessment: Ground Water Monitoring Guidelines for Geothermal Development. EPA/600/7-79/218 (NTIS PB80-144801), 232 pp.

Wershaw, R.L., M.J. Fishman, R.R. Bragge, and L.E. Lowe (eds.). 1987. Methods for the Determination of Organic Substances in Water and Fluvial Sediments. U.S. Geological Survey Techniques of Water Resources Investigations, TWRI 5-A3, 80 pp. (Revision of Goerlitz and Brown, 1972.)

Westerman, R.L (edition.). 1990. Soil Testing and Plant Analysis, 3rd edition. Soil Science Society of America, Madison, WI, 812 pp. [Methods for analysis of soil and plants focussing on use for assessing nutritional requirements of crops, efficient fertilizer use, saline-sodic conditions, and toxicity of metals]

Willard, H.H., L.L. Merritt, Jr., J.A. Dean, and F.A. Settle, Jr. 1988. Instrumental Methods of Analysis, 7th edition. Wadsworth Publishing Co., Belmont, CA.

Williams, R.D., and G.E. Schuman (eds.). 1987. Reclaiming Mine Soils and Overburden in the Western United States: Analytic Parameters and Procedures. Soil Conservation Society of America, Ankeny, IA, 336 pp. [Focus on potential toxic elements]

Wilson, L.G. 1980. Monitoring in the Vadose Zone: A Review of Technical Elements. EPA/600/7-80/134 (NTIS PB81-125817).

Wolbach, C.D., R.R. Whitney, and U.B. Spannegel. 1984. Design and Development of a Hazardous Waste Reactivity Testing Protocol. EPA/600/2-84/057 (NTIS PB84-158807), 143 pp. [Field test kit for on-site compatibility testing of wastes]

Wood, W.W. 1976. Guidelines for Collection and Field Analysis of Ground-Water Samples for Selected Unstable Constituents. U.S. Geological Survey Techniques of Water Resources Investigations, TWRI 1-D2, 24 pp.

Yang, J.T. and W.E. Bye. 1979. Methods of Preventing, Detecting, and Dealing with Surface Spills of Contaminants Which May Degrade Underground Water Sources for Public Water Systems. EPA/570/9-79/018 (NTIS PB82-204082).

Zimmic, T.F and C.O. Riggs (eds.). 1981. Permeability and Groundwater Contaminant Transport. ASTM STP 746, American Society for Testing and Materials, Philadelphia, PA. [12 papers]

*Available from ORD Publications, U.S. EPA Center for Environmental Research Information, P.O. Box 19963, Cincinnati, OH 45268-0963 (513-569-7562).

APPENDIX D

GUIDE TO VADOSE ZONE MODELS FOR WATER BUDGET AND EXPOSURE MODELING

Preliminary site reconnaissance should provide sufficient information to develop a preliminary conceptual model (or models) of the site that has three main elements (see Figure D-1): (1) Characteristics of the waste source, (2) known or potential pathways for migration, and (3) receptors of exposure to the contaminant. Mathematical models or computer codes often are used to evaluate potential for transport of contaminants and to estimate exposure. The conceptual model, and computer modeling efforts are an iterative process in which: (1) The current model helps define the parameters that should be sampled or otherwise characterized; (2) data are collected; (3) the model is confirmed or modified to reflect the new information; (4) additional data are collected if necessary.

Depending on local conditions, the soil (weathered zone) can be separated from the water table (saturated zone) by an intervening zone, called the vadose zone where water flow occurs predominantly under unsaturated conditions. Modeling of contaminant transport in the vadose zone tends to be more complicated than in the saturated zone because variations on moisture content and gaseous phase transport also must be considered.

Computer codes that model the soil and vadose zone (also called variably saturated or saturated/unsaturated flow models) fall into three main groups: (1) **Flow** models, which deal only with the flow of water in variably saturated conditions; (2) **transport** models, which deal with the movement of contaminants or other chemicals under saturated/unsaturated conditions; and (3) **geochemical** models (also called distribution-of-species codes), which deal with reactions in the aqueous phase of the system.

This appendix focuses on vadose zone models that focus on the soil rooting zone, because they can be used for both **water budget** analysis, which is useful for characterization of the hydrologic system at the site, and evaluation of **leaching potential** to ground water, which is important for exposure assessment. U.S. EPA (1988b) provides guidance on the selection of vadose zone models for exposure assessment.

Table D-1 summarizes input data requirements for 10 near-surface vadose zone models, and Table D-2 indexes references where additional information can be found about these 10 models.[1] When a model has been selected, this table can be used to identify the soil parameters that must be estimated or measured during field investigation activities. The most important soil physical and hydrologic parameters, based on the frequency with which they are required in these 10 models, are: (1) Saturated hydraulic conductivity and saturated moisture content (90%), (2) soil bulk density and precipitation (80%), (3) unsaturated hydraulic conductivity, water retention, and soil porosity (70%); (4) soil texture and soil temperature (60%); (5) horizons or soil layering (50%); (6) air permeability and depth to ground water (20%). The other chemistry-related parameters in this table generally are obtained by laboratory analyses of soil or ground-water samples.

Numerous other computer codes have been developed for modeling flow and chemical transport in soil and the vadose zone. U.S. EPA (1988a) contains one or two page descriptions of 14 computer codes that can be used for modeling below the rooting zone (none of which are included in Table D-1). Information on 28 variably saturated flow models, and 26 variably saturated flow/solute transport models, are summarized in van der Heijde et al. (1988). Donigian and Rao (1986b) compare the capabilities of four of the models in Table D-1 (HELP, SESOIL, CREAMS, and PRZM), and six other models that deal with soil leaching. Sposito (1985) discusses a number of models that can be used for geochemical modeling of inorganic pollutants in soil system, without consideration of flow.

---

[1] Other models that might have value for application at contaminated sites for water budget analysis or contaminant transport assessment include: (1) CMLS (Chemical Movement in Layered Soils), (2) GLEAMS (Groundwater Loading Effects of Agricultural Management Systems), (3) HSWDS (Hydrologic Simulation of Waste Disposal Sites), (4) PESTAN (Pesticide Analytical Model), (5) RUSTIC (Risk of Unsaturated/Saturated Transport and Transport and Transformation of Chemical Concentrations), and (6) VLEACH (a one-dimensional finite difference vadose zone leaching model). The RETC code can be used to estimate unsaturated hydraulic conductivity as a function of moisture content based on other soil parameters, such as texture.

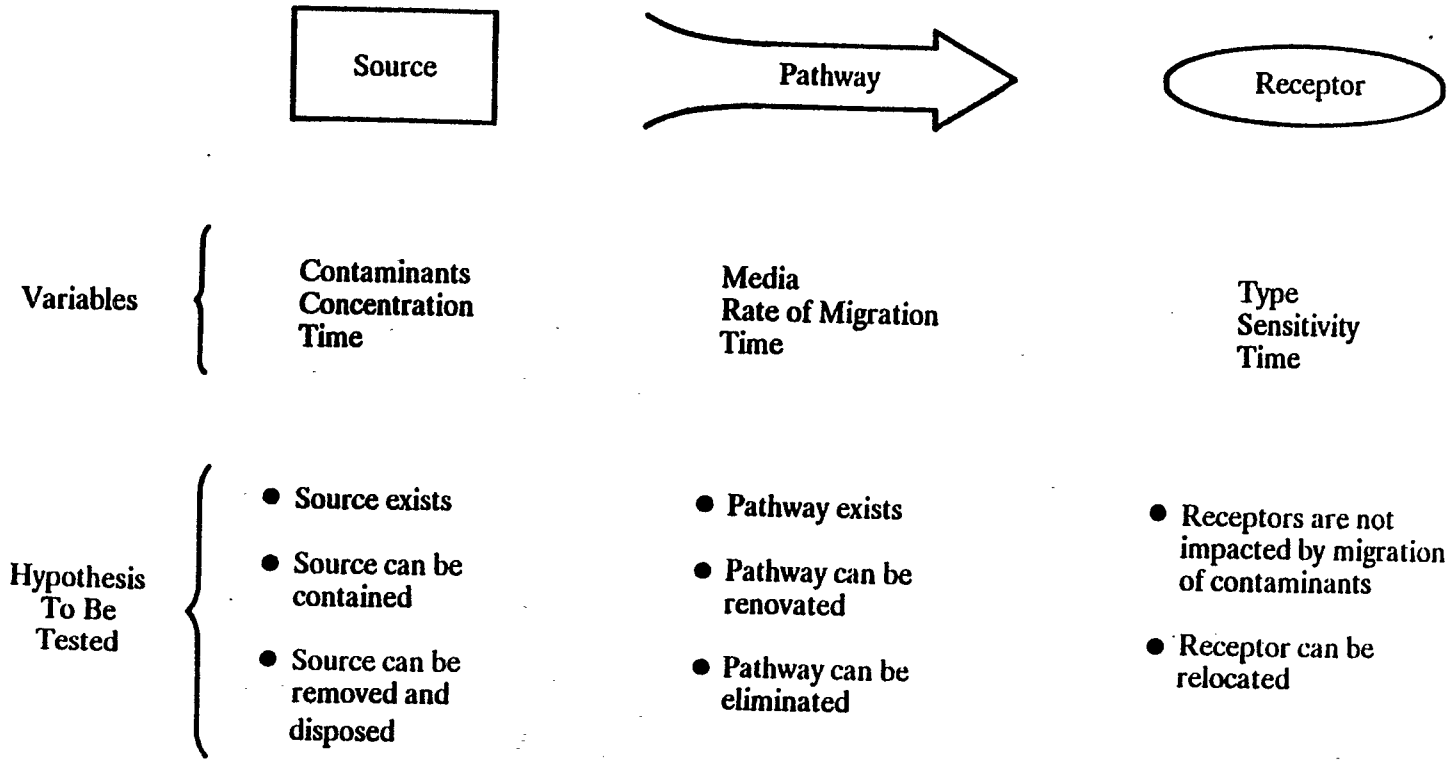

Figure D-1 Elements of a conceptual model for contaminated site characterization (Barth et al., 1989).

Table D-1 Soil Characteristics Required for Vadose Zone Models

TABLE 3. SOIL CHARACTERISTICS REQUIRED FOR VADOSE ZONE MODELS

Properties and Parameters	Model Name [Reference(s)]									
	Help (A,B)	Sesoil (C,D)	Creams (E,F)	PRZM (G,H,I)	Vadoft (H,J)	Minteq (J)	Fowl™ (K)	Ritz (L)	Vip (M)	Chemflo (N)
Soil bulk density	◍	●	●	●	●	◍	●	●	●	●
Soil pH	○	●	◍	○	○	●	●	○	○	○
Soil texture	●	◍	●	●	●	◍	◍	●	●	◍
Depth to ground water	◍	●	◍	◍	●	◍	◍	◍	◍	◍
Horizons (soil layering)	●	●	●	●	●	◍	◍	◍	◍	◍
Saturated hydraulic conducitivity	●	●	●	●	●	◍	●	●	●	●
Water retention	●	●	●	●	●	◍	●	○	○	●
Air permeability	○	●	○	◍	◍	○	○	◍	●	○
Climate (precipitation)	●	●	●	●	◍	○	●	●	●	●
Soil porosity	●	●	●	●	●	◍	◍	●	●	◍
Soil organic content	○	●	●	●	●	●	◍	●	●	◍
Cation Exchange Capacity (CEC)	○	●	○	○	○	●	○	○	○	○
Degradation parameters	●	●	●	●	●	○	○	●	●	●
Soil grain size distribution	○	◍	◍	◍	◍	○	○	○	○	○
Soil redox potential	○	◍	◍	○	○	●	○	○	○	◍
Soil/water partition coefficients	○	●	●	●	●	●	●	●	●	●
Soil oxygen content	○	◍	○	○	○	◍	○	○	●	○
Soil temperature	◍	●	◍	●	●	●	◍	●	●	◍
Soil mineralogy	○	●	○	○	○	◍	○	○	○	○
Unsaturated hydraulic conductivity	●	●	●	●	●	◍	●	○	○	●
Saturated soil moisture content	●	●	●	●	●	◍	●	●	●	●
Microorganism population	○	◍	○	○	○	○	○	○	◍	○
Soil respiration	○	◍	○	○	○	○	○	○	◍	○
Evaporation	●	●	●	●	◍	○	○	●	●	●
Air/water contaminant densities	◍	◍	◍	◍	◍	○	●	●	●	◍
Air/water contaminant viscosities	◍	◍	◍	◍	◍	○	◍	◍	◍	◍

REFRENCES
A. Schroeder, et al., 1984.
B. Schroeder, et al., 1984a.
C. Bonazountas and Wagner, 1984.
D. Chen, Wollman, and Liu, 1987.
E. Leonard and Ferreira, 1984.
F. Devaurs and Springer, 1988.
G. Carsel et al., 1984.
H. Dean et al., 1989.
I. Dean et al., 1989a.
J. Brown and Allison, 1987.
K. Hostetler, Erickson, and Rai, 1988.
L. Nofziger and Willaims, 1988.
M. Stevens et al.,1989.
N. Nofziger et al., 1989.

● Required ○ Not required ◍ Used indirectly*

* Used in ther estimation of other required characteristics or the intrpretation of the models, but not directly entered as input to models.

Source: Breckenridge et al. (1991)

Table D-2 Reference Index for Near-Surface Vadose Zone and Geochemical Models

Topic	References
General	
Vadose Zone Modeling	Overviews: Breckenridge et al. (1991), Donigan and Rao (1986a), El-Kadi and Beljin (1987), Hern and Melancon (1986a), Iskander (1981), Mangold and Tsang (1987), Nielsen et al. (1990), Oster (1982), Thompson et al. (1989), U.S. EPA (1984, 1988a,b), van Genuchten (1987), Weaver et al. (1989), Whelan and Brown (1988); Conference/Symposia: Arnold et al. (1982), Evans and Nicholson (1987-fractured rock), Wierenga and Bachelet (1988)
Vadose Model Comparisons	Addiscott and Wagenet (1985), Donigian and Rao (1986b), Kincaid and Morrey (1984), Kincaid et al. (1984), Oster (1982), van der Heijde et al. (1988)
Geochemical Modeling	Apps (1988), Jenne (1979), Jacobs and Whatley (1985), Jenne (1981), Melchior and Bassett (1990), NWWA (1988, 1990), U.S. EPA (1990a,b), Yeh and Tripathi (1989); Model Comparisons: Mangold and Tsang (1987), Nordstrom and Ball (1984), Nordstrom et al. (1979), Schechter et al. (1985), Sposito (1985)
Field Testing	Hern and Melancon (1986b), Hern et al. (1986), van der Heijde et al. (1989), Weaver et al. (1989)
Flow and Transport Models	
CHEMFLO*	Nofziger et al. (1989)
CMLS	Ehteshami et al. (1991), Nofziger and Hornsby (1986, 1987)
CREAMS	Barnes and Rodgers (1988), Beasley et al. (1991), Devaurs and Springer (1988), Donigian and Rao (1986b), Knisel (1980), Knisel and Leonard (1990), Knisel et al. (1985), Leonard and Ferreira (1984), van der Heijde et al. (1988)
FOWL	Hostetler et al. (1988)
GLEAMS	Beasley et al. (1991), Davis et al. (1990), Knisel and Leonard (1990), Knisel et al. (1991), Leonard et al. (1987)
HELP	Barnes and Rodgers (1988), Donigian and Rao (1986b), Dwyer et al. (1988), Schroeder et al. (1984a,b), Schroeder and Peyton (1987a,b)
HSWDS	Perrier and Gibson (1982)
MINTEQ	Brown and Allison (1987), Loux et al. (1989, 1990), Morrey et al. (1986)
PESTAN*	Hern and Melancon (1986b), Melancon et al. (1986), Ravi and Johnson (1992)
PRZM	Banton and Villeneuve (1989), Carsel et al. (1984, 1985, 1988), Donigian and Rao (1986b), Heddon (1986), Hern and Melancon (1986b), Kincaid and Morrey (1984), Melancon et al. (1986), van der Heijde et al. (1988), Varshney et al. (1993), Whelan and Brown (1988)

Table D-2 (cont.)

Topic	References
RETC*	van Genuchten et al. (1991)
RITZ*	Jury et al. (1983), Nofziger and Williams (1988), Sims et al. (1991), U.S. EPA (1986), van der Heijde et al. (1988)
RUSTIC (PRZM + VADOFT)	Dean et al. (1989), Varshney et al. (1993)
SESOIL	Bonazountas and Wagner (1984), Chen et al. (1987), Donigian and Rao (1986b), Hern and Melancon (1986b), Kincaid et al. (1984), Melancon et al. (1986), van der Heijde et al. (1988)
VADOFT	Dean et al. (1989), Huyakorn et al. (1988), Varshney et al. (1993)
VIP*	Grenney et al. (1987), McClean et al. (1988), Sims et al. (1991), Stevens et al. (1988, 1989), Symons et al. (1988)
VLEACH*	CH2M Hill (1990)
Unnamed	Tim and Mostaghimi (1989), Wagenet and Hutson (1986)

*Available from EPA Center for Subsurface Modeling Support, P.O. Box 1198, Ada OK 74820; (505-332-8800).

APPENDIX D REFERENCES

Addiscott, T.M. and R.J. Wagenet. 1985. Concepts of Solute Leaching in Soils: A Review of Modeling Approaches. J. Soil Science 36:411-424.

Apps, J.A. 1988. Current Geochemical Models to Predict the Fate of Hazardous Waste in the Injection Zones of Deep Disposal Wells. Lawrence Berkeley Laboratory, Draft Report LBL-26007. (Detailed summary available in Chapter 6 of U.S. EPA [1990b].)

Arnold, E.M., G.W. Gee, and R.W. Nelson (eds.). 1982. Proc. of the Symposium on Unsaturated Flow and Transport (Seattle, WA). NUREG/CP-0030, PNL-SA-10325, U.S. Nuclear Regulatory Commission, Washington, DC. [18 papers]

Banton, O. and J. Villeneuve. 1989. Evaluation of Groundwater Vulnerability to Pesticides: A Comparison Between the Pesticide DRASTIC Index and the PRZM leaching quantities. J. Contaminant Hydrology 4:285-296.

Barnes, F.J. and J.C. Rodgers. 1988. Evaluation of Hydrologic Models in the Design of Stable Landfill Covers. EPA/600/2-88/048 (NTIS PB88-243811). [HELP, CREAMS]

Barth, D.S., B.J. Mason, T.H. Starks, and K.W. Brown. 1989. Soil Sampling Quality Assurance User's Guide, 2nd edition. EPA/600/8-89/046 (NTIS PB89-189864), 225+ pp.

Beasley, B., W.G. Knisel, and A.P. Rice (eds.). 1991. Proceedings of the CREAMS/GLEAMS Symposium. Publication No. 4. Agr. Eng. Dept., Univ. Georgia, Athens, GA.

Bonazountas, M. and J.M. Wagner. 1984. SESOIL: A Seasonal Soil Compartment Model, Draft Report. EPA Contract No. 68-01-6271. (Prepared by A.D. Little for Office of Toxic Substances, Washington, DC.)

Breckenridge, R.P., J.R. Williams, and J.F. Keck. 1991. Characterizing Soils for Hazardous Waste Site Assessments. Superfund Ground-Water Issue Paper EPA/600/8-91/008. U.S. Environmental Protection Agency Environmental Monitoring Systems Laboratory, Las Vegas, NV.

Brown, D.S. and J.D. Allison. 1987. MINTEQA1, an Equilibrium Metal Speciation Model: A User's Manual. EPA/600/3-87/012 (NTIS PB88-144167), 103 pp.

Carsel, R.F., C.N. Smith, L.A. Mulkey, J.D. Dean, and P. Jowise. 1984. Users Manual for the Pesticide Root Zone Model (PRZM): Release 1. EPA/600/3-84/109 (NTIS PB85-158913).

Carsel, R.F., L.A. Mulkey, M.N. Lorber, and L.B. Baskin. 1985. Pesticide Root Zone Model (PRZM): A Procedure for Evaluating Pesticide Leaching Threats to Groundwater. Ecological Modeling 30(1/2):49-69.

Carsel, R., R.L. Jones, J.L. Hansen, R.L. Lamb, and M.P. Anderson. 1988. A Simulation Procedure for Groundwater Quality Assessments of Pesticide. J. Contaminant Hydrology 4:125-138. [PRZM]

CH2M Hill. 1990. VLEACH: A One-Dimensional Finite Difference Vadose Zone Leaching Model, Version 1.02. U.S. EPA Region 9, San Francisco, CA.

Chen, J., S. Wollman, and J. Liu. 1987. User's Guide to SESOIL. Execution in GEMS, GSC-TR8747. (Prepared by General Sciences Corp. for EPA Office of Pesticides and Toxic Substances, Washington, DC.)

Davis, F.M., W.G. Knisel, and R.A. Leonard. 1990. GLEAMS User Manual, Version 1.8.55. Lab. Note SEWRL-030290FMD. ARS-USDA, Tifton, GA.

Dean, J.D., P.S. Huyakorn, A.S. Donigian, Jr., K.A. Voos, R.W. Schanz, and R.F. Carsel. 1989. Risk of Unsaturated/Saturated Transport and Transformation of Chemical Concentrations (RUSTIC), Vol. 1: Theory and Code Verification. EPA/600/3-89/048a. U.S. Environmental Protection Agency Environmental Research Laboratory, Athens, GA. [Includes PRZM, VADOFT, for vadose zone flow/transport, and SAFTMOD for saturated zone flow/transport]

Devaurs, M. and E. Springer. 1988. Representing Soil Moisture in Experimental Trench Cover Designs for Waste Burial with the CREAMS Model. Hazardous Waste and Hazardous Materials 5(4):295-312.

Donigian, A.S., Jr. and P.S.C. Rao. 1986a. Overview of Terrestrial Processes and Modeling. In: Guidelines for Field Testing Soil Fate and Transport Models, S.C. Hern and S.M. Melancon, (eds.), EPA/600/4-86/020 (NTIS PB86-209400), pp. 1-32.

Donigian, A.S., Jr. and P.S.C. Rao. 1986b. Overview of Terrestrial Processes and Modeling. In: Vadose Zone Modeling of Organic Pollutants, S.C. Hern and S.M. Melancon (eds.), Lewis Publishers, Chelsea, MI, pp. 3-36. [Summarizes information on 10 codes that simulate transport of contaminants in the vadose zone]

Dwyer, J.R., J.C. Walton, W.E. Greenberg, and R. Clark. 1988. Evaluation of Municipal Solid Waste Landfill Cover Designs. EPA/600/2-86/110 (NTIS PB88-171327). [HELP]

Ehteshami, M., R.C. Peralta, H. Eisele, H. Deer, and T. Tindall. 1991. Assessing Pesticide Contamination to Ground Water: A Rapid Approach. Ground Water 29(6):862-868. [DRASTIC and CMLS Model; see paper for other vadose zone models]

El-Kadi, A.I. and M.S. Beljin. 1987. Models for Unsaturated Flow and Solute Transport. GWMI 87-12, International Ground Water Modeling Center, Golden, CO, 27 pp. [Summary information on 62 documented models]

Evans, D.D. and T.J. Nicholson (eds.). 1987. Flow and Transport Through Unsaturated Fractured Rock. AGU Geophysical Monograph 42, American Geophysical Union, Washington, DC. [9 out of 22 of the papers of the cover modeling]

Grenney, W.J., C.L. Caupp, R.C. Sims, and T.E. Short. 1987. A Mathematical Model for the Fate of Hazardous Substances in Soil: Model Description and Experimental Results. Hazardous Wastes & Hazardous Materials 4:223-239. [VIP]

Heddon, K.F. 1986. Example Field Testing of Soil Fate and Transport Model, PRZM, Dougherty Plain, Georgia. In: Vadose Zone Modeling of Organic Pollutants, S.C. Hern, and S.M. Melancon (eds.), Lewis Publishers, Chelsea, MI, pp. 81-102.

Hern, S.C. and S.M. Melancon. 1986a. Vadose Zone Modeling of Organic Pollutants. Lewis Publishers, Chelsea, MI. [11 contributed chapters on vadose processes and modeling]

Hern, S.C. and S.M. Melancon. 1986b. Guidelines for Field Testing Soil Fate and Transport Models: Final Report. EPA/600/7-86/020 (NTIS PB86-209400). [PRZM, SESOIL, PESTAN]

Hern, S.C., S.M. Melancon, and J.E. Pollard. 1986. Generic Steps in the Field Validation of Vadose Zone Fate and Transport Models. In: Vadose Zone Modeling of Organic Pollutants, S.C. Hern, and S.M. Melancon (eds.), Lewis Publishers, pp. 61-80.

Hostetler, C.J., R.L. Erikson, and D. Rai. 1988. The Fossil Fuel Combustion Waste Leaching (FOWL) Code: Version 1. User's Manual. EPRI EA-5742-CCM, Electric Power Research Institute, Palo Alto, CA.

Huyakorn, P.S., H.O. White, Jr,. J.E. Buckley, and T.D. Wadsworth. 1988. VADOFT: Finite Element Code for Simulating One-Dimensional Flow and Solute Transport in the Vadose Zone. Project Report to Woodward-Clyde Consultants.

Iskander, I.K. 1981. Overview of Models Used in Land Treatment of Wastewater. CRREL Special Report 82-1, U.S. Army Corps of Engineers Cold Region Research Engineering Laboratory, Hanover, NH, 27 pp. [Summary information on 29 water and solute flow models]

Jacobs, G.K. and S.K. Whattley (eds.). 1985. Proceedings of the Conference on the Application of Geochemical Models to High-Level Nuclear Waste Repository Assessment. NUREG/CP-0062, U.S. Nuclear Regulatory Commission, Washington, DC, 126 pp.

Jenne, E.A. (edition.). 1979. Chemical Modeling in Aqueous Systems: Speciation, Sorption, Solubility, and Kinetics. ACS Symp. Series 93. American Chemical Society, Washington, DC.

Jenne, E.A. 1981. Geochemical Modeling: A Review. PNL-3574, Battelle Northwest Laboratory, Richland, WA.

Jury, W.A., W.F. Spencer, and W.J. Farmer. 1983. Behavior Assessment Model for Trace Organics in Soil: Model Description. Journal of Environmental Quality 12:558-564. [RITZ]

Kincaid, C.T. and J.R. Morrey. 1984. Geohydrochemical Models for Solute Migration. Volume 2: Preliminary Evaluation of Selected Computer Codes. EPRI EA-3417-2, Electric Power Research Institute, Palo Alto, CA. [SESOIL and others]

Kincaid, C.T., J.R. Morrey, and J.E. Rogers. 1984. Geohydrochemical Models for Solute Migration. Volume 1: Process Description and Computer Code Selection. EPRI EA-3417-1, Electric Power Research Institute, Palo Alto, CA. [PRZM and others]

Knisel, W. (edition.). 1980. CREAMS: A Field-Scale Model for Chemicals, Runoff, and Erosion from Agricultural Management Systems. Conservation Research Report No. 26, U.S. Department of Agriculture, Washington, DC, 643 pp.

Knisel, W.G. and R.A. Leonard. 1990. Representative Climatic Record for Pesticide Runoff and Leaching Simulation. Pub. No. 2, Coll. Agr. Univ. Georgia, Tifton, GA, 16 pp.

Knisel, W.G., D.C. Moffitt, and T.A. Dumper. 1985. Representing Seasonally Frozen Soil With the CREAMS Model. Trans. Am. Soc. Agric. Eng. 28(5)a:1487-1493.

Knisel, W.G., R.A. Leonard, F.M. Davis, and J.M. Sheridan. 1991. Water Balance Components in the Georgia Coastal Plain: A GLEAMS Model Validation and Simulation. J. Soil and Water Conservation 46:450-456.

Leonard, R.A. and V.A. Ferreira. 1984. CREAMS2--The Nutrient and Pesticide Models. In: Proc. of the Natural Resources Modeling Symposium, U.S. Department of Agriculture.

Leonard, R.A., W.G. Knisel, and D.A. Still. 1987. GLEAMS: Groundwater Loading Effects of Agricultural Management Systems. Trans. Am. Soc. Agric. Eng. 30(5):1403-1418.

Loux, N.T., D.S. Brown, C.R. Chafin, J.D. Allsion, and S.M. Hassan. 1989. Modeling Geochemical Processes Attenuating Inorganic Contaminant Transport in the Subsurface Region: Adsorption on Amorphous Iron Oxide. EPA/600/D-89/171 (NTIS PB90-116781), 25 pp. [MINTEQ]

Loux, N.T., D.S. Brown, C.R. Chafin, J.D. Allsion, and S.M. Hassan. 1990. Modeling Geochemical Processes Attenuating Inorganic Contaminant Transport in the Subsurface Region: Implementing Adsorption Processes. EPA/600/D-90/118 (NTIS PB90-263088), 21 pp. [MINTEQ]

McLean, J.E., R.C. Sims, W.J. Doucette, C.L. Caupp, and W.J. Grenney. 1988. Evaluation of Mobility of Pesticides in Soil using U.S. EPA Methodology. Journal of Environmental Engineering (ASCE) 114:689-703. [VIP]

Mangold, D.C. and C.-F. Tsang. 1987. Summary of Hydrologic and Hydrochemical Models with Potential Application to Deep Underground Injection Performance. Lawrence Berkeley Laboratory LBL-23497, Berkely, CA, 54 pp. [Comparative information on 6 flow models, 16 saturated solute transport models, 11 unsaturated solute transport models, 17 chemical-reaction transport models, and 7 geochemical codes]

Melancon, S.M., J.E. Pollard, and S.C. Hern. 1986. Evaluation of SESOIL (Seasonal Soil Compartment Model), PRZM (Pesticide Root Zone Model), and PESTAN (Pesticide Analytical Model) in a Laboratory Column Leaching Experiment. Environ. Toxicol. Chem. 5:865-878.

Melchior, D.C. and R.L. Bassett (eds.). 1990. Chemical Modeling of Aqueous Systems II. ACS Symp. Series 416, American Chemical Society, Washington, DC.

Morrey, J.R., C.T. Kincaid, and C.J. Hostetler. 1986. Geohydrochemical Models for Solute Migration, Volume 3: Evaluation of Selected Computer Codes. EPRI EA-3417-3, Electric Power Research Institute, Palo Alto, CA. [MINTEQ and others]

National Water Well Association (NWWA). 1988. Proceedings of Geochemical Modeling of Ground Water Conference. NWWA, Dublin, OH.

National Water Well Association (NWWA). 1990. Proceedings of the 1990 Cluster of Conferences (Ground Water Geochemistry). Ground Water Management No. 1, NWWA, Dublin, OH. [10 papers on fate and modeling of contaminants]

Nielsen, D.R., D. Shibberu, G.E. Fogg, and D.R. Rolston. 1990. A Review of the State of the Art: Predicting Contaminant Transport in the Vadose Zone. Report 90-17CWP, California Water Resources Control Board, Sacramento, CA, 19 pp.

Nofziger, D.L. and A.G. Hornsby. 1986. A Microcomputer-Based Management Tool for Chemical Movement in Soil. Applied Agricultural Research 1:50-56. [CMLS]

Nofziger, D.L. and A.G. Hornsby. 1987. Chemical Movement in Layered Soils: User's Manual. Florida Cooperative Extension Service Circular 78, Institute of Food and Agricultural Science, University of Florida, Gainsville, FL.

Nofziger, D.L. and J.R. Williams. 1988. Interactive Simulation of the Fate of Hazardous Chemicals During Land Treatment of Oily Wastes: RITZ User's Guide. EPA/600/8-88/001 (NTIS PB88-195540)

Nofziger, D.L., K. Rajender, S.K. Nayudu, and P.Y. Su. 1989. CHEMFLOW: A One-Dimensional Water and Chemical Movement in Unsaturated Soils: User's Manual. EPA/600/8-89/076 (NTIS PB90-126020), 115 pp.

Nordstrom, D.K. and J.W. Ball. 1984. Chemical Models, Computer Programs and Metal Complexation in Natural Waters. In: Complexation of Trace Metals in Natural Waters, C.J.M. Kramer and J.C. Duinker (eds.), Martinus Nijhoff/Dr. W. Junk Publishers, The Hague, pp. 149-164. [Provides information on 57 geochemical codes]

Nordstrom, D.K., et al. 1979. A Comparison of Computerized Chemical Models for Equilibrium Calculations in Aqueous Systems. In: Chemical Modeling in Aqueous Systems: Speciation, Sorption, Solubility and Kinetics, E.A. Jenne, (edition.), ACS Symp. Series 93, American Chemical Society, Washington, DC, pp. 857-892. [Summarizes information on 14 geochemical codes and comparative results from calculations using a single test case]

Oster, C.A. 1982. Review of Groundwater Flow and Transport Models in the Unsaturated Zone. NUREG/CR-2917, PNL-4427. Pacific Northwest Laboratory, Richland, WA. [Summarizes information on 53 flow and transport codes involving unsaturated flow]

Perrier, E.R. and A.C. Gibson. 1982. Hydrologic Simulation of Waste Disposal Sites. EPA/SW-868, Revised Edition, 129 pp. Available from RCRA Hotline (800-424-9346). [HSWDS User's Manual]

Ravi, V. and J.A. Johnson. 1992. PESTAN: Pesticide Analytical Model Version 4.0. U.S. EPA Center for Subsurface Modeling Support, Ada, OK.

Schechter, R.S., L.W. Lake, and M.P. Walsh. 1985. Development of Environmentally Attractive Leachants, Vol. III. U.S. Bureau of Mines Mining Research Contract Report, Washington, DC. [Evaluates codes with potential for assessment of leachates associated with mining activities]

Schroeder, P.R. and R.L. Peyton. 1987a. Verification of the Lateral Drainage Component of the HELP Model Using Physical Models. EPA/600/2-87/049 (NTIS PB87-227104).

Schroeder, P.R. and R.L. Peyton. 1987b. Verification of the Hydrologic Evaluation of Landfill Performance (HELP) Model Using Field Data. EPA/600/2-87/050 (NTIS PB87-227518).

Schroeder, P.R, J.M. Morgan, T.M. Walski, and A.C. Gibson. 1984a. Hydrologic Evaluation of Landfill Performance (HELP) Model, Vol. I: User's Guide for Version 1. EPA/530/SW-84/009 (NTIS PB85-100840).

Schroeder, P.R, A.C. Gibson, and M.D. Smolen. 1984b. Hydrologic Evaluation of Landfill Performance (HELP) Model, Vol. II: Documentation of Version 1. EPA/530/SW-84/010 (NTIS PB85-100832).

Sims, R.C., J.L. Sims, and S.G. Hansen. 1991. STF: Soil Transport and Fate Database 2.0 and Model Management System. U.S. Environmental Protection Agency R.S. Kerr Environmental Research Laboratory, Ada, OK. [Includes VIP and RITZ]

Sposito, G. 1985. Chemical Models of Inorganic Pollutants in Soils. CRC Critical Reviews in Environmental Control 15(1):1-24. [Compares four geochemical codes for modeling soil chemistry and four models for adsorption]

Stevens, D.K., W.J. Grenney, and Z. Yan. 1988. User's Manual: Vadose Zone Interactive Processes Model. Utah State University, Logan, UT. [VIP]

Stevens, D.K., W.J. Grenney, Z. Yan, and R.C. Sims. 1989. Sensitive Parameter Evaluation for a Vadose Zone Fate and Transport Model. EPA/600/2-89/039 (NTIS PB89-213987/AS). [VIP]

Symons, B.D., R.C. Sims, and W.J. Grenney. 1988. Fate and Transport of Organics in Soil: Model Predictions and Experimental Results. J. Water Pollut. Control Fedition. 60:1684-1693.

Thompson, C.M., et al. 1989. Techniques to Develop Data for Hydrogeochemical Models. EPRI EN-6637. Electric Power Research Institute, Palo Alto, CA. [Summary information in data requirements for 25 saturated and variably saturated flow and transport codes, and 5 geochemical codes]

Tim, U.S. and S. Mostaghimi. 1989. Model for Predicting Transport of Pesticides and Their Metabolites in the Unsaturated Zone. Water Resources Bulletin 25:765-774.

U.S. Environmental Protection Agency (EPA). 1984. Procedures for Modeling Flow Through Clay Liners to Determine the Required Liner Thickness. EPA/530/SW-84/001 (NTIS PB87-191029).

U.S. Environmental Protection Agency (EPA). 1986. Permit Guidance Manual for Hazardous Land Treatment Demonstrations. EPA/530/SW-86/032 (NTIS PB86-229184).

U.S. Environmental Protection Agency (EPA). 1988a. Selection Criteria for Mathematical Models Used in Exposure Assessments: Ground Water Models. EPA/600/8-88/075 (NITS PB88-248752).

U.S. Environmental Protection Agency (EPA). 1988b. Superfund Exposure Assessment Manual. EPA/540/1-88/001 (NTIS PB90-135859).

U.S. Environmental Protection Agency (EPA). 1990a. Assessing the Geochemical Fate of Deep-Well-Injected Hazardous Waste: A Reference Guide. EPA/625/6-89/025a. Available from CERI.* [Chapter 5 reviews seven geochemical codes]

U.S. Environmental Protection Agency (EPA). 1990b. Assessing the Geochemical Fate of Deep-Well-Injected Hazardous Waste: Summaries of Recent Research. EPA/625/6-89/025b. Available from CERI.* [Chapter 6 provides a detailed summary of Apps (1988)]

van der Heijde, P.K.M., A.I. El-Kadi, and S.A. Williams. 1988. Groundwater Modeling: An Overview and Status Report. EPA/600/2-89/028 (NTIS PB89-224497). (Also available from International Ground Water Modeling Center, Butler University, Indianapolis, IN.)

van der Heijde, P.K.M., W.I.M. Elderhorst, R.A. Miller, and M.J. Trehan. 1989. The Establishment of A Groundwater Research Data Center for Validation of Subsurface Flow and Transport Models. EPA/600/2-89/040 (NTIS PB89-224455), 238 pp.

van Genuchten, M.Th. 1987. Progress in Unsaturated Flow and Transport Modeling. Reviews of Geophysics 25(2):135-140.

van Genuchten, M.Th., F.J. Leij, and S.R. Yates. 1991. The RETC Code for Quantifying the Hydraulic Functions of Unsaturated Soils. EPA/600/2-91/065.

Varshney, P., U.S. Tim, and C.E. Anderson. 1993. Risk-Based Evaluation of Ground-Water Contamination by Agricultural Pesticide. Ground Water 31:356-362. [RUSTIC, PRZM, VADOFT]

Wagenet, R.J. and J.L. Hutson. 1986. Predicting the Fate of Nonvolatile Pesticides in the Unsaturated Zone. J. Environ. Qual. 15:315-322.

Weaver, J., C.G. Enfield, S. Yates, D. Kreamer, and D. White. 1989. Predicting Subsurface Contaminant Transport and Transformation: Considerations for Model Selection and Field Validation. EPA/600/2-89/045 (NTIS PB90-155615).

Whelan, G. and S.M. Brown. 1988. Groundwater Assessment Modeling Under the Resource Conservation and Recovery Act. EPRI EA-5342, Electric Power Research Institute, Palo Alto, CA. [Appendix C presents summary information on RAPCON, PRZM, GRDFLX, AT123D, VTT, and FE3DGW/CFEST codes]

Wierenga, P.J. and D. Bachelet (eds.). 1988. Proceedings of International Conference and Workshop on the Validation of Flow and Transport Models for the Unsaturated Zone (Ruidoso, NM). New Mexico State University, Las Cruces, NM.

Yeh, G.T. and V.S. Tripathi. 1989. A Critical Evaluation of Recent Developments in Hydrogeochemical Transport Models of Reactive Multichemical Components. Water Resources Research 25(1):93-108.

*Available from ORD Publications, U.S. EPA Center for Environmental Research Information, P.O. Box 19963, Cincinnati, OH 45268-0963 (513-569-7562).

*U.S. GOVERNMENT PRINTING OFFICE: 1995-650-006/00222 A