EPA-440/1-75/049-a
GROUP II

Development Document for Effluent Limitations Guidelines and New Source Performance Standards for the

PAVING AND ROOFING MATERIALS

(Tars and Asphalt)

Point Source Category

July 1975

UNITED STATES ENVIRONMENTAL PROTECTION AGENCY

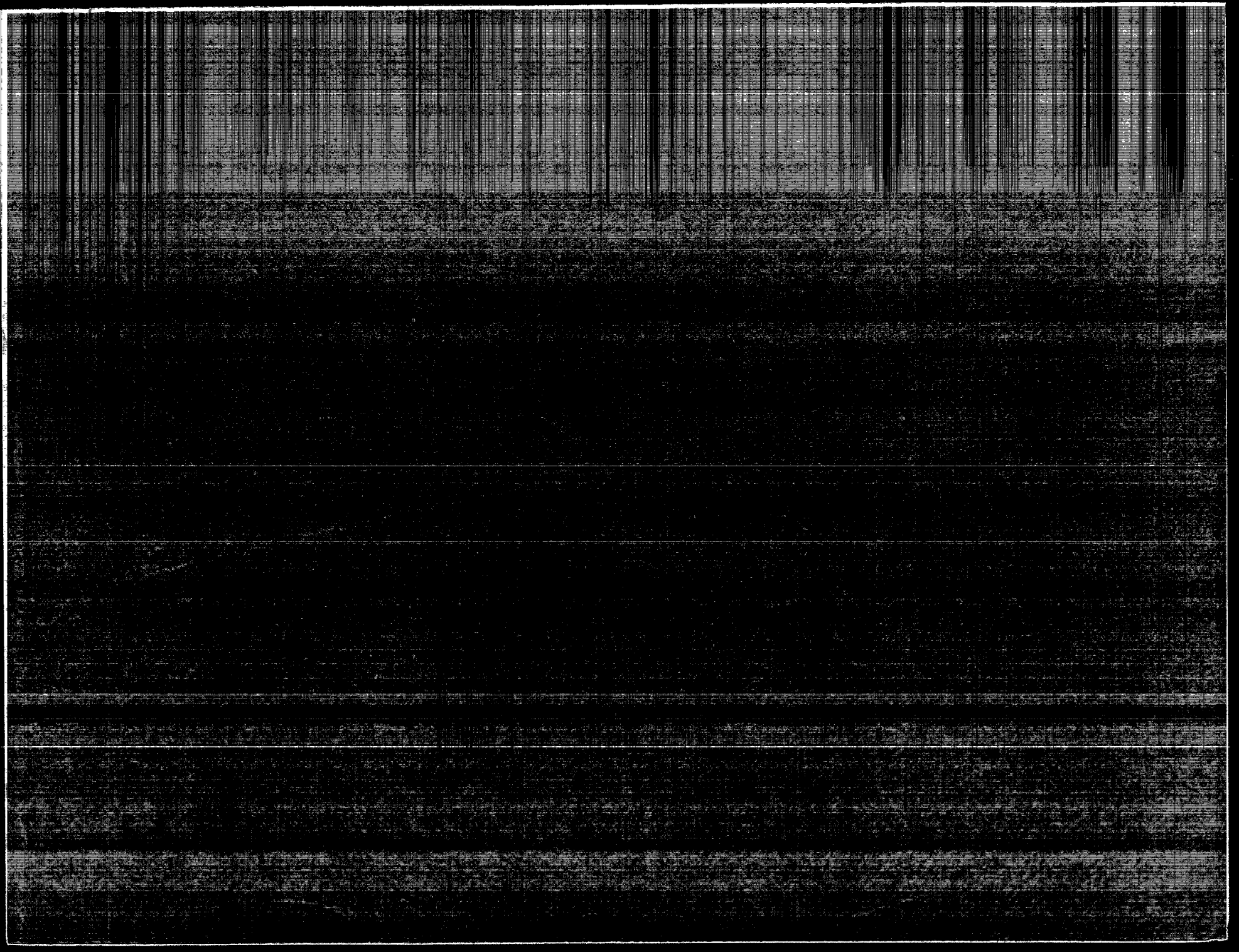

DEVELOPMENT DOCUMENT

for

EFFLUENT LIMITATIONS GUIDELINES

and

NEW SOURCE PERFORMANCE STANDARDS

for

PAVING AND ROOFING MATERIALS (TARS AND ASPHALT)

POINT SOURCE CATEGORY

Russell E. Train
Administrator

James L. Agee
Assistant Administrator for Water
and Hazardous Materials

Mr. A.D. Sidio
Director
National Field Investigations Center
Cincinnati, Ohio

Allen Cywin
Director, Effluent Guidelines Division

John Nardella
Project Officer

July, 1975

Effluent Guidelines Division
Office of Water and Hazardous Materials
U.S. Environmental Protection Agency
Washington, D.C. 20460

For sale by the Superintendent of Documents, U.S. Government Printing Office, Washington, D.C. 20402 - Price $1.65

ABSTRACT

This document presents the findings of an in-house study of the asphalt paving and roofing materials industry. It was completed by the EPA, National Field Investigations Center - Cincinnati, for the purpose of developing effluent limitations guidelines and Federal standards of performance for the industry, to implement Sections 304 and 306 of the Federal Water Pollution Control Act, as amended.

Effluent limitations guidelines contained herein set forth the degree of effluent reduction attainable through the application of the best practicable control technology currently available and the degree of effluent reduction attainable through the application of the best available technology economically achievable which must be achieved by existing point sources by July 1, 1977, and July 1, 1983, respectively. The standards of performance for new sources contained herein set forth the degree of effluent reduction which is achievable through the application of the best available demonstrated control technology, processes, operating methods, or other alternatives.

Supportive data and rationale for development of the proposed effluent limitations guidelines and standards of performance are contained in this report.

Contents

Section		Page
I.	Conclusions	1
II.	Recommendations	3
III.	Introduction	7
	Purpose and Authority	7
	Summary of Methods Used for Development of the Effluent Limitations Guidelines and Standards of Performance	8
	General Description of the Industry	9
IV.	Industrial Categorization	33
	Categorization	33
	Rationale for Selection of Subcategories	33
V.	Waste Characterization	37
	General Use	37
	Specific Uses	37
VI.	Pollutant Parameters	41
	Selected Parameters	41
	Major Pollutants	41
VII.	Control and Treatment Technology	51
	Summary	51
	Control Measures by Subcategory	53
	Treatment Technology	54
VIII.	Cost, Energy and Non-Water Quality Aspect	57
	Introduction	57
	Cost Information	57
	Costs by Subcategory	59
IX.	Best Practicable Control Technology Currently Available	67
	Pretreatment Standards for Existing Sources	71
X.	Best Available Technology Economically Achievable	75
	Introduction	75
	Effluent Reduction Attainable Through the Application of Best Available Technology Economically Achievable	76
XI.	New Source Performance Standards	79
	Standards of Performance for New Sources	79
	Pretreatment Standards for New Sources	80
XII.	Acknowledgments	83
XIII.	References	85
XIV.	Glossary	87
XV.	Conversion Table	92

Tables

Table		Page
1.	Status of Wastewater Treatment and Disposal Practices at Plants in the Paving and Roofing Materials (Tars and Asphalt) Category (1974)	2
2.	Effluent Limitations for Asphalt Emulsion Plants	3
3.	Effluent Limitations for Asphalt Concrete Plants	4
4.	Effluent Limitations for Asphalt Roofing Plants	4
5.	Effluent Limitations for Linoleum and Printed Asphalt Felt Plants	5
6.	Gross Sales By Subcategories Covered in These Guidelines (1971)	11
7.	Data Base for Manufacturing Facilities in the Asphalt Paving and Roofing Industry	12
8.	Typical Prepared Roofings	19
9.	Roofing Shipments in the United States	20
10.	Weights and Uses of Typical Felts	21
11.	Treatment Costs in Dollars for Asphalt Emulsion Plants	60
12.	Treatment Costs in Dollars for Asphalt Concrete Plants	62
13.	Treatment Costs in Dollars for Asphalt Roofing Plants Earthen Stilling Basin Used	63
14.	Treatment Costs in Dollars for Asphalt Roofing Plants Settling Tank Used	64
15.	Treatment Costs in Dollars for Linoleum and Asphalt Felts Plants	65

Figures

Figure		Page
1	Half section view of asphalt oxidizing tower	14
2	Controlled hot-mix asphalt concrete plant	16
3	Schematic drawing of line for manufacturing asphalt shingles, mineral-surfaced rolls, and smooth rolls.	24
4	Schematic drawing of line for manufacturing linoleum	30

SECTION I

CONCLUSIONS

This report proposes effluent guidelines and standards of performance, for the industries listed under the following Standard Industrial Classification (SIC) code categories:

SIC 2951 - Paving mixtures and blocks
SIC 2952 - Asphalt felts and coatings
SIC 3996 - Linoleum, asphalted-felt-base, and other hard surface floor coverings not elsewhere classified

These categories were subcategorized into the following four industrial facilities:

1. Asphalt emulsion plants that make blown asphalt for use in either roofing or paving materials and also produce asphalt emulsion.
2. Asphalt concrete plants that manufacture paving materials, such as blacktop.
3. Asphalt roofing plants that produce asphalt felts, shingles, and other products, such as asphalt impregnated siding, expansion joints, tars and pitch, and roofing cements.
4. Linoleum and printed asphalt felt plants that make linoleum and printed asphalt felt floor coverings.

The major selection criteria for the four subcategories are the type of product manufactured and the quantity of waste generated. Other factors, such as age, size, and location of plants do not require further subcategories. The main pollutants in these wastes are non-filterable suspended solids and freon extractible oils. The suspended solids can be removed by using sedimentation, filtration, or air flotation methods, while gravity separators, air flotation, or deep bed filters can remove the oils.

A large number of plants in all four subcategories are currently achieving the 1977 requirement for application of best practicable technology currently available and the 1983 requirement for the application of best available technology economically achievable. The number of plants doing so in each subcategory are listed in Table 1.

TABLE 1

Status of
Wastewater Treatment and Disposal Practices
At Plants in the
Paving and Roofing Materials (Tars and Asphalt) Category
(1974)

	Approximate Number of Plants				
Subcategory	Approx. No. of plants	Meeting 1977 standards*	Meeting 1983 standards*	Using municipal sewer system	With little or no treatment
Asphalt emulsion	50	18+	8#	25	7
Asphalt concrete	3,600**	3,100+	3,100#	None known	500
Asphalt roofing	225	46+	25#	158	21
Linoleum and printed felt	20++				20

* See Section III.
\+ Industry - provided estimate
\# Included in total for 1977 standards.
** An additional 1,200 plants do not use water in the processing.
++ Only one plant is known to produce linoleum.

New source performance standards are proposed which reflect internal improvements which can be achieved through effective design and layout of plant operation. The resulting effluent may be recycled or discharged.

SECTION II

RECOMMENDATIONS

The following effluent limitations guidelines and standards of performance are recommended for the asphalt emulsion, asphalt concrete, asphalt roofing, linoleum, and printed asphalt felt industries (Tables 2 through 5).

TABLE 2

Effluent Limitations For Asphalt Emulsion Plants*

Technology or Standard	30-day average kg/cu m	30-day average lb/1000 gal	Maximum daily kg/cu m	Maximum daily lb/1000 gal
Suspended Solids				
BPCTCA+	Not Regulated		Not Regulated	
BATEA#	0.015	0.125	0.023	0.188
NSPS#	0.015	0.125	0.023	0.188
Oils and Grease				
BPCTCA	0.015	0.125	0.020	0.167
BATEA	0.010	0.083	0.015	0.125
NSPS	0.010	0.083	0.015	0.125

Note: pH within the range 6.0 to 9.0

*Limits are based on the containment of runoff resulting from 7.62 cm (3 in) of rain falling on a 4-hectare (10-acre) plant production site during a 24-hour period. The resulting volume of water is 3,028 cu m/day (0.8 mgd). The limits are also based on weight of pollutant per volume of runoff water.

+Best practicable control technology currently available

#Best available technology economically achievable

**New source performance standards

TABLE 3

Effluent Limitations For
Asphalt Concrete Plants

Technology or Standard	Suspended Solids			
	30-day average		Maximum daily	
	kg/kkg	lb/1000 lb	kg/kkg	lb/1000 lb
BPCTCA*	No Discharge		No Discharge	
BATEA+	No Discharge		No Discharge	
NSPS#	No Discharge		No Discharge	

*Best practicable control technology currently available
+Best available technology economically achievable
#New source performance standards

TABLE 4

Effluent Limitations For
Asphalt Roofing Plants*

Technology or Standard	Suspended Solids			
	30-day average		Maximum daily	
	kg/kkg	lb/1000 lb	kg/kkg	lb/1000 lb
BPCTCA+	0.038	0.038	0.056	0.056
BATEA#	0.010	0.019	0.028	0.028
NSPS**	0.019	0.019	0.028	0.028

NOTE: pH within the range 6.0 to 9.0

*Limits are based on weight of pollutant per weight of product produced. An average water discharge of 569 cu m/day (0.15 mgd) and a daily production level of 454 kkg (500 tons) were used in the unit determination.
+Best practicable control technology currently available
#Best available technology economically achievable.
**New source performance standards

TABLE 5

Effluent Limitations For
Linoleum and Printed Asphalt Felt Plants*

Technology or Standard	Suspended Solids			
	30-day average		Maximum daily	
	kg/kkg	lb/1000 lb	kg/kkg	lb/1000 lb
BPCTCA+	0.025	0.025	0.038	0.038
BATEA#	0.013	0.013	0.019	0.019
NSPS**	0.013	0.013	0.019	0.019

NOTE: pH within the range 6.0 to 9.0

*Limits are based on weight of pollutant per weight of product produced. An average water discharge of 23 cu m/day (0.006 mgd) and a daily production level of 27 kkg (30 tons) were used in the limit determination.
+Best practicable control technology currently available
#Best available technology economically achievable
**New source performance standards

SECTION III

INTRODUCTION

Purpose and Authority

Section 301 (b) of the Federal Water Pollution Control Act, as amended requires the achievement by not later than July 1, 1977, of effluent limitations for point sources, other than publicly owned treatment works, which are based on the application of the best practicable control technology currently available as defined by the Administrator pursuant to Section 304 (b) of the Act. Section 301 (b) also requires the achievement by not later than July 1, 1983, of effluent limitations for point sources, other than publicly owned treatment works, which are based on the application of the best available technology economically achievable which will result in reasonable further progress toward the national goal of eliminating the discharge of all pollutants, as determined in accordance with regulations issued by the Administrator pursuant to Section 304 (b) of the Act. Section 306 of the Act requires the achievement by new sources of a Federal standard of performance providing for the control of the discharge of pollutants which reflects the greatest degree of effluent reduction which the Administrator determines to be achievable through the application of the best available demonstrated control technology, processes, operating methods, or other alternatives, including, where practicable, a standard permitting no discharge of pollutants.

Section 304 (b) of the Act requires the Administrator to publish regulations providing guidelines for effluent limitations setting forth the degree of effluent reduction attainable through the application of the best practicable control technology currently available and the degree of effluent reduction attainable through the application of the best available control measures and practices achievable including treatment techniques, process and procedure innovations, operation methods and other alternatives. The recommendations proposed herein set forth effluent limitations guidelines pursuant to Section 304 (b) of the Act for the asphalt emulsion, asphalt concrete, asphalt roofing, linoleum, and printed asphalt felt manufacturing point sources.

Summary of Methods Used for Development of the Effluent Limitations Guidelines and Standards of Performance

The effluent limitations guidelines and standards of performance proposed herein were developed in the following manner. The point source category was first studied for the purpose of determining whether separate limitations and standards are appropriate for different segments within the category. This analysis included a determination of whether differences in raw material used, product produced, manufacturing process employed, age of plant, size of plant, wastewater constituents, and other factors require development of separate limitations and standards for different segments of the point source category. The raw waste characteristics for each such segment were then identified. This included an analysis of: (1) the source flow and volume of water used in the process employed and the sources of waste and wastewaters in the plant; and (2) the constituents (including thermal) of all wastewaters, including toxic constituents and other constituents which result in taste, odor, and color in the water or aquatic organisms. The constituents of the wastewaters which should be subject to effluent limitations guidelines and standards of performance were identified.

The full range of control and treatment technologies existing within each segment was identified. This included an identification of each distinct control and treatment technology, including both in-plant and end-of-process technologies, which are existent or capable of being designed for each segment. It also included an identification of, in terms of the amount of constituents (including thermal) and the chemical, physical, and biological characteristics of pollutants, the effluent level resulting from the application of each of the treatment and control technologies. The problems, limitations, and reliability of each treatment and control technology and the required implementation time were also identified. In addition, the non-water quality environmental impact, such as the effects of the application of such technologies upon other pollution problems, including air, solid waste, noise, and radiation was also identified. The energy requirements of each control and treatment technology were identified as well as the cost of the application of such technologies.

The information, as outlined above, was then evaluated in order to determine what levels of technology constituted the "best practicable control technology currently available," the "best available technology economically achievable," and

the "best" available demonstrated control technology, processes, operating methods, or other alternatives." In identifying such technologies, various factors were considered. These included the total cost of application of technology in relation to the effluent reduction benefits to be achieved from such application, the age of equipment and facilities involved, the process employed, the engineering aspects of the application of various types of control techniques, process changes, non-water quality environmental impact (including energy requirements) and other factors.

The data on which the above analysis was performed were derived from EPA permit applications, EPA sampling and inspections, and industry submissions.

General Description of the Industry

The SIC codes (categories) discussed in these guidelines are:

1. 2951 - Paving mixtures and blocks
2. 2952 - Asphalt felts and coatings
3. 3996 - Linoleum, asphalted-felt-base, hard-surface floor coverings, not elsewhere classified.

These categories were then divided into the following subcategories:

1. Asphalt emulsion plants engaged in the production of blown asphalt for use in roofing or paving materials.
2. Asphalt concrete plants engaged in the production of paving materials, such as black top
3. Asphalt roofing plants engaged in the production of asphalt felts, shingles, and other products, such as impregnated asphalt siding, expansion joints, canal liners, roofing cements, tars and pitches, and tar paper.
4. Linoleum and printed asphalt felt plants engaged in the production of linoleum floor coverings and printed asphalt felt floor coverings.

The waste waters generated by the Asphalt Paving and Roofing manufacturing industry has received almost no attention in engineering and pollution control literature. Very few plants have any information more extensive than the results of analyses of one or a few grab samples of the final effluent. The data used in this document were, therefore, necessarily very limited and were derived from a small number of sources. Some of these were published literature on manufacturing processes, EPA technical publications on

the industry, and consultations with qualified personnel. Most of the information on wastewater volumes and characteristics, however, was obtained from: 1) Refuse Act Permit Program (RAPP) applications; 2) an on-site sampling program; 3) telephone conversations with people in the industry and from district and city wastewater treatment personnel.

Approximately 5,100 plants with gross sales of $1.8 billion in 1971 manufacture products which are covered by this document. These plants are located throughout the country, but are generally near large metropolitan areas. The numerical breakdown of the plants in each subcategory and the 1971 gross sales for each are shown in Table 6.

RAPP applications were available and used to study 43 of these facilities. The applications provided data on the characteristics of intake and effluent waters, water usage, wastewater treatment provided, daily production, and raw materials used.

Because the process used by each subcategory and the resulting wastewater characteristics are similar in nature, visiting one or two plants and making several telephone surveys were considered sufficient to verify the data collected on wastewater characteristics and treatment techniques.

The number of known manufacturing facilities in each subcategory and the number of plants visited, sampled, and contacted by telephone are presented in Table 7. It also lists the number of plants that discharge into city sewer systems and the number of RAPP applications examined.

TABLE 6

Gross Sales By Subcategories
Covered In These Guidelines *
(1971)

SIC	Subcategory	Number of Plants	Gross Sales (Million of Dollars)
2951	Asphalt emulsion plants	50	
2951	Asphalt concrete plants	4,800+	747.5#
2952	Asphalt roofing plants	226	825.9
	1. Asphalt and tar saturated felts and boards for non-building use.		19.8
	2. Roofing asphalts, pitch, coatings, and cements.		153.7
	3. Asphalt and tar roofing and siding products.		638.5
	4. Asphalt felts and coatings.		13.9
3996	Linoleum and printed asphalt felt plants	20	245.6
	1. Linoleum, asphalt felt base, and supporting plastic floor covering.		241.6
	2. Hard surface floor covering		4.0
	TOTAL	5,096	1,819.0

* From Reference 3

\+ This figure is comprised of approximately 900 asphalt concrete plants that are classed under SIC Code 2951, and approximately 3,900 asphalt concrete plants that are classed under SIC Code 1611.

\# Total gross sales for the combined SIC Code Group 2951 minus the sales from the plants classed under SIC Code 1611.

TABLE 7

Data Base
for
Manufacturing Facilities
in the
Asphalt Paving and Roofing Industry

Subcategory	No. of Plants Reported	RAPP Applications	Plants by Phone	Surveyed visited or sampled	Discharge to city system
Asphalt Emulsion	50	4	5	2	25
Asphalt Concrete	4,880	11	8	1	None Known
Asphalt Roofing	226	25	25	3	158
Linoleum and Printed Felts	20	3	7	2	20
TOTAL	5,176	43	45	8	203

The asphalt concrete and asphalt roofing plants are the two largest subcategories in terms of numbers of plants and gross sales. The asphalt emulsion and concrete plants gross sales for 1971 are given as a combined sum for the entire 2951 subcategory. The leading product of the 2952 subcategory is the impregnated shingle.

Although tar products are listed under this subcategory, their use is slowly being phased out. Some products that are labeled tar paper are, in fact, asphalt saturated felts.

SIC code group 3996 has been divided into linoleum, asphalt-felt base and hard-surface floor coverings. The latter accounts for such a small percentage of total sales that it will not be discussed further.

True linoleum is known to be produced by only one plant in the United States, while approximately 20 plants produce the less-expensive grade of printed asphalt felt floor covering. Printed felts are often sold as linoleums, but in reality they are not. Both linoleum and printed asphalt felt floor

coverings are being phased out and being replaced with vinyl floor coverings, which are easier to install and whose wearing surface lasts longer. A more detailed description at each subcategory follows:

Asphalt Emulsion Plants (SIC 2951)

More than 90% of all asphalt and asphalt products is manufactured from the residues generated when crude petroleum is distillated. The residual, called "resid" or "flux" is barged or trucked to the manufacturers' plants and stored in heated tanks until ready for processing. The resid which is heated to approximately 232°C (450°F) is pumped to the top of a vertical tower. The vertical tower known as an oxidizing tower, oxidizes the heated resid by forcing hot air through it (Figure 1). The rate at which the resid is pumped into the oxidizing tower varies, but the average flow is about 0.76 cu m/min (200 gpm). The hot air drives off the high volatiles and modifies some of the resid's physical properties -- melting point, hardness, penetration, and ductility. The longer the resid is oxidized, the more these physical properties are modified. Asphalt used in paving operations and paving emulsion are oxidized continuously in a flow-through tower, while asphalt used in roofing applications is batch processed and is allowed to oxidize for a longer period of time.

Various methods can be used to control air emissions from the tower. The exhaust gases may be passed through a series of knockout drums before being burned or through a series of wet scrubbers. Knockout drums cause the heavier particles in the air stream to fall out and the remaining gases are burned to remove any volatiles still present. Wet scrubbers trap the particles in water.

Paving asphalt is stored in heated tanks as soon as it leaves the oxidizing tower, while roofing asphalt is packaged immediately or is emulsified with a water and chemical mixture, then packaged. The containers are made of paper board or metal.

Emulsions that can be used in roofing or paving mixtures are emulsified in colloidal mills. Asphalt enters the mill at a temperature of about 177°C (350°F) and is emulsified with a water and chemical mixture which enters at a temperature of 66°C (150°F). The resulting emulsion temperature is between 99-110°C (210-230°F). The emulsion is cooled in a shell and tube heat exchanger and is then packaged in 19 or 208 l (5 or 55 gal) containers. By varying the water and chemical mixture, different grades of emulsions can be produced.

FIGURE 1
HALF SECTION VIEW
OF
ASPHALT OXIDIZING TOWER

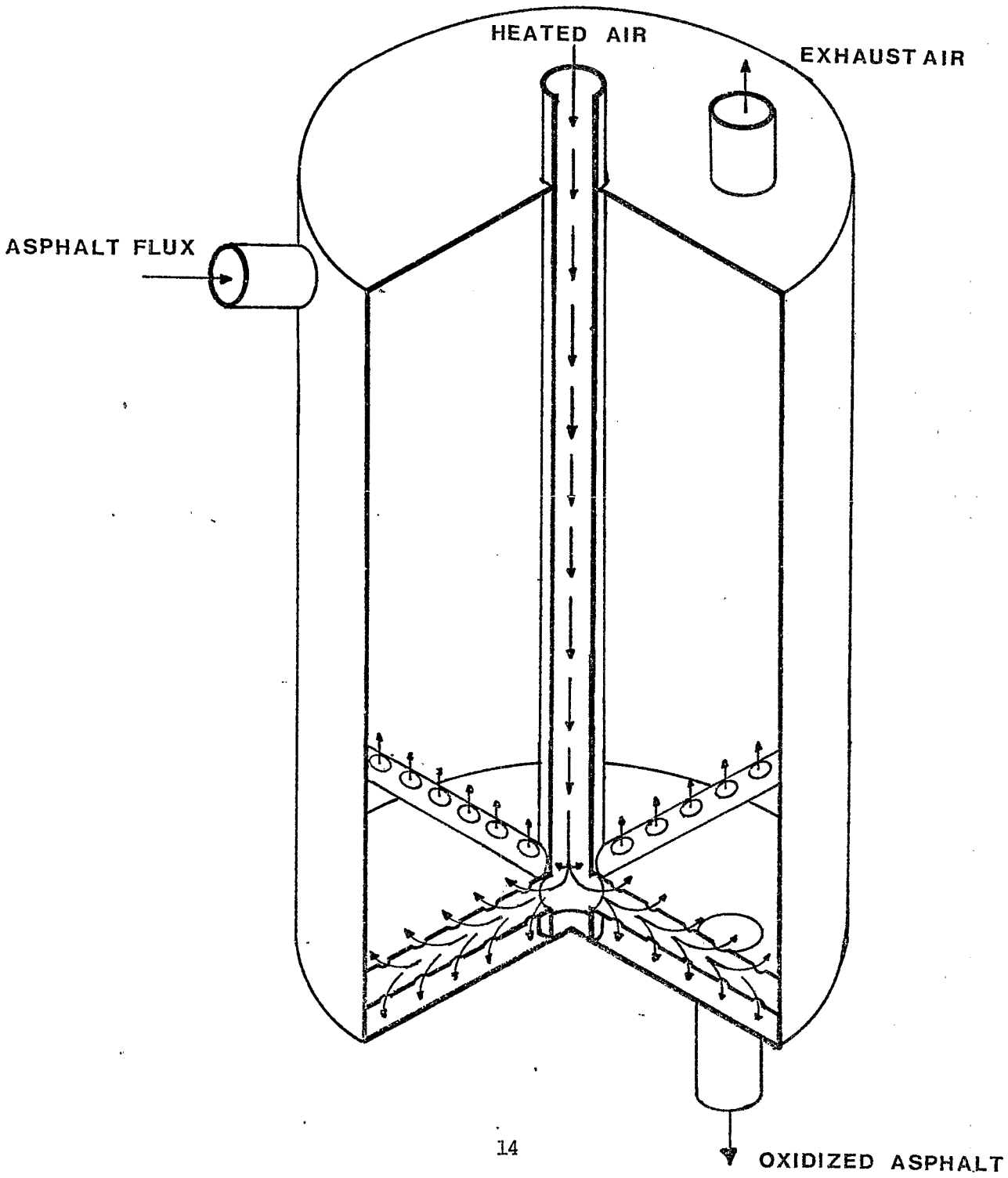

Plants in this subcategory range in size from 1,814 to 9,072 kkg/day (2,000 to 10,000 tons/day). The average size plant used in developing these guidelines produced 5,443 kkg/day (6,000 tons/day). The primary use of water in this subcategory is to control the temperature of the oxidizing tower, and this is done by two methods. First, water circulates through jackets around the outside of the tower and never comes in contact with the asphalt. The flow varies between 190 and 3,790 cu m/day (0.05 to 1.0 mgd). Second, water is injected into the oxidizing asphalt at a carefully monitored rate so as not to disrupt the oxidizing process yet stay within the temperature limits. The rate of water injection is about 11.4 l/min (3 gpm). As the water is injected, it is vaporized by the heat of the tower. The heat needed to do this is therefore expended and results in a cooler tower temperature.

Only the first method results in a wastewater discharge, but it is relatively free of contaminants because the water is essentially a noncontact type. The only source of contaminated water is from the wet collection of exhaust fumes or from runoff caused by precipitation. This water is usually sewered with the cooling water.

Asphalt Concrete Plants (SIC 2951)

Asphaltic concrete is made by combining sand or gravel with asphalt. Sand or gravel is heated and dried in a rotary drier and is then transported to a mixing hopper where a weighed amount of asphalt is mixed in (Figure 2).

Until a few years ago, the asphalt concrete industry was generally recognized as a major source of particulate emissions. Poorly controlled asphalt concrete plants were known to release 5 to 7.5 kg/kkg (10 to 15 lb/ton) of particulates to the atmosphere. Considering an average size plant produces approximately 181 kkg/hr (200 ton/hr) of asphalt concrete an installation equipped with only dry centrifugal dust collectors, would emit 907 to 1,361 kg (2,000 to 3,000 lb) of particulate each hour of operation. To reduce emissions, fabric filters or medium-energy venturi scrubbers, normally preceded by a cyclone or multiple cyclones, can be used to collect dust from the drier. Other systems of collecting the particulate matter can be used, but the above methods are the two most widely used in this subcategory. The wet type collection system is the most commonly used system. The amount of water needed for a wet collection system may range from 0.2 to 0.8 cu m/min (50 to 200 gpm). The resultant slurry is usually discharged to an

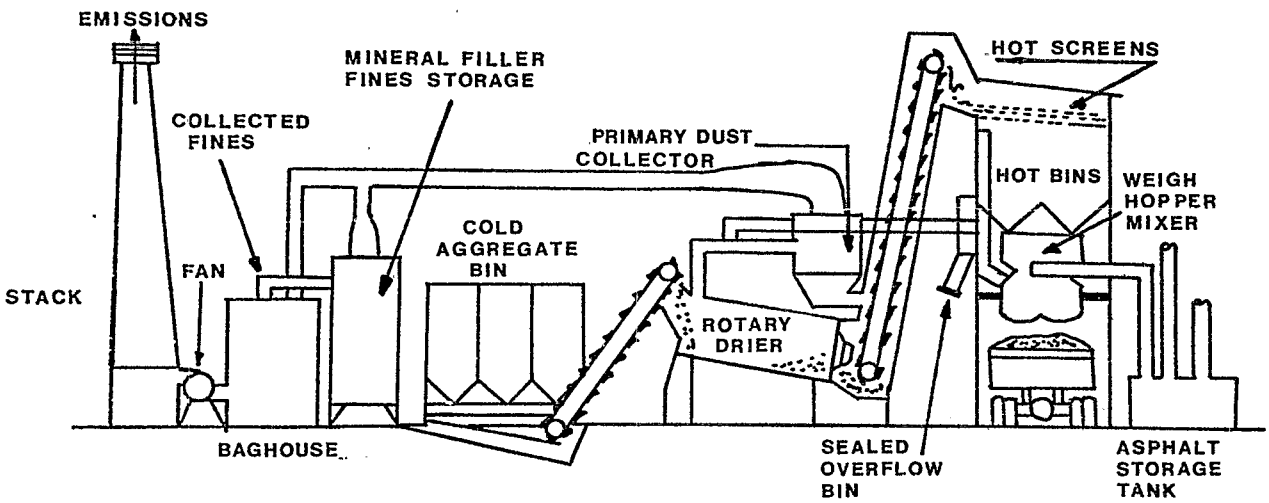

FIGURE 2: CONTROLLED HOT-MIX ASPHALT CONCRETE PLANT.
(FROM REFERENCE 1)

open pit where the particulates settle out; the clear water is then recycled.

Asphalt Roofing Plants (SIC 2952)

Asphalt saturated felt products are used as a water barrier, primarily in the siding and roofing materials field. Roofing felts and impregnated roofing felts (shingles) rank ahead of roofing asphalts and tars, tar papers, canal liners, expansion joints, roofing cements, and other asphalt-related items produced by plants in this subcategory. Only the roofing felts and impregnated roofing felts will be discussed.

Asphalt roofings are classified as "prepared" or "built-up", depending on the method of construction and application. Roofings that are factory "prepared" and are applied to a roof without any major constituent having to be added are called prepared, composition, or ready roofings; the first term is generally preferred by the industry. The major components of built-up roofings are assembled just prior to being applied. Since this is done on-site and not at a factory, this type of roofing will not be discussed.

Prepared roofings are composed of a structural felt framework, a relatively soft asphalt saturant for the felt, and a relatively hard or viscous asphalt coating applied to the surfaces of the felt. Minerals may be embedded in the final coating.

The roofing may be in the form of small individual or multiple-cut units in large flat sheets or in long strips or rolls. Regardless of their form, they are designed to be held on by nails or by nails and a small amount of cement. They consist almost entirely of asphalts of petroleum origin. Some experimental prepared roofings have been produced employing coal tar saturants and coatings, but these have not been manufactured commercially. When marketed in the form of small cut units they are called shingles, and when supplied in roll form they are designated roll roofings. Prepared roofings sold in the form of large flat sheets are usually of multiple ply construction and are termed plied or laminated roofings.

Roll roofings may be dusted on both sides with fine mineral matter, such as talc, mica, or fine sand, to prevent sticking in the rolls, or the side intended for exposure to the weather may have the fine mineral replaced by relatively coarse mineral granules. The first type is described as smooth-roll roofing, the second as granule-surfaced roll

roofing. Asphalt shingles are always granule surfaced. (Table 8)

Several terms are used to describe the various types of prepared roofing. Both smooth and granule-surfaced roll roofings are described as composition or ready roofings. Smooth roll roofings are also sometimes referred to as rubber roofings. Granule-surfaced roofing is also known as mineral surfaced roofing, slate surface roofing, or grit roll roofing. Asphalt shingles are called slate-surfaced shingles, composition shingles, and frequently as asbestos shingles, even though they usually contain no asbestos fibers.

As first marketed, prepared roofings made with asphalt impregnants and coatings were not granule-surfaced. Granule-surfaced roll roofings first appeared in 1897, and granule-surfaced (slate) shingles were introduced in 1901. Asphalt shingles did not come into general use until about 1911. By 1971 asphalt-prepared rocfings accounted for approximately 90% of all the roofing materials used in the United States. Department of Commerce figures, which show the shipment of asphalt roofing material sold, are summarized in Table 9. The estimated dollar value of the asphalt roofing sold in 1971 was approximately $826 million. (Table 6)

Materials Used

Felts

Asphalt roofings are currently made of three types of roofing felt or fabric: organic, asbestos, or glass fibers. Felts are formed on a machine similar to that used to manufacture paper. Typical weights and uses are presented in Table 10.

TABLE 8

Typical Prepared Roofings*

Parameter	Smooth Roll Roofing	Granule-surfaced Roll Roofing	Standard Shingle
Weight, lb/100 sq ft	48.4	90	98
Felt base, % by wt	14.0	12.5	11.6
Saturant for felt, % by wt	19.6	19.9	19.9
Coating (filled), % by wt	59.8	23.9	34.4
Surfacing, % by wt	6.6	43.7	34.2
Character of felt			
Weight, lb/480 sq ft	30	50	55
Thickness, in.	0.034	0.055	0.060
Composition:			
Rag fiber, %	0	0	0
Chemical wood pulp, %	45	45	45
Mechanical wood pulp, %	55	55	55
Character of saturant			
Softening point (R&B), °F	110	110	130
Penetration at 77°F	150	150	70
Character of coating			
Filler (limestone), % by wt	50	50	53
Softening point (R&B), unfilled, °F	220	220	220
Softening point (R&B), filled, °F	230	230	230
Penetration at 77°F, unfilled	18	18	18
Character of surfacing			
Cumulative retained			
10-mesh sieve, %	0	1	1
14-mesh sieve, %	0	35	35
35-mesh sieve, %	0	98	98
100-mesh sieve, %	40	+	+
200-mesh sieve, %	60	+	+

* From Reference 5
\+ Not measurable

TABLE 9

Roofing Shipments in the United States*

Year	Asphalt Roofing 100 sq ft	Asphalt Siding 100 sq ft	Insulated Siding 100 sq ft	Saturated Felt Tons
1972	97,696,321	136,102	366,612	895,062
1971	93,246,194	185,668	375,096	915,556
1970	83,179,391	259,942	333,844	848,262
1969	84,430,028	363,627	346,464	919,687
1968	78,044,744	417,648	410,621	874,998
1967	76,500,410	467,597	444,587	876,019
1966	69,393,339	554,368	539,445	879,571
1965	72,337,669	627,564	590,120	979,632

* From References 2 and 3

TABLE 10

Weights and Uses of Typical Felts*

Fiber type	Average dry weight (lb/100 sq ft)	Saturated weight (lb/100 sq ft)	Saturated felt use
Organic	5.6	13-14+#	Built-up roofing, shingle underlayment, "building paper"
	6.3	18-20	Lightweight roll roofing
	10.4	26-27**	built-up and roll roofing
	11.5	30-31++	shingles, standard and heavyweight
	12.5	32.5-34++	heavyweight shingles***
Asbestos	9.0	13-15##	built-up roofing
	12.0	18-20##	roll roofing, smooth and granule surfaced
Glass	1	4-6	built-up roofing, granule-surfaced shingles
	2	8-10	built-up rooding, roll roofing, shingles

* From Reference 5
\+ Must be at least 2.4 times the dry weight of dry felt.
\# Saturated with asphalt or coal tar; all other products shown are asphalt saturated.
** Must be at least 2.5 times the dry weight.
++ Must be at least 2.6 times the dry weight.
Must be at least 1.4 times the dry weight.
*** Some manufacturers.

Asphalt

The asphalts used in the manufacture of prepared roofing consist almost entirely of petroleum origin. The asphalts used in impregnating the felts, known in the industry as "saturants," are usually of a semi-solid consistency. The saturants employed for shingles are generally harder, are more viscous, and have a higher softening point, 52-82°C (125-180°F), than those employed in manufacturing roll roofings, 38-52°C (100-125 °F).

Coating asphalts, and those applied to the surface of the saturated felts in the manufacture of prepared roofings must be fluid enough to spread uniformly over the saturated felt, adhere well to the felt, and hold mineral granules. On the other hand, the coating must be stable enough not to flow when the product is installed on the roof, and it must continue to hold the granules in place. The viscosity of the asphalt coating at roof temperature is estimated to be on the order of 7 x 10(8) poises. Such coatings have softening points in the range of 93-121° C (200 - 250°F). Coatings consist of 100% asphalt or contain mineral fillers in amounts as high as 50-60% by weight of the mixture. Most manufacturers add mineral fillers to increase the coating's weatherability. The fillers are usually of 100 mesh or finer and are ground from such weather-resistant minerals as slate, limestone, silica, trap rock, diatomaceous earth, talc, and mica.

The asphalts used as cements in the manufacture of plied roofings have softening points between 66-121°C (150-250°F), and are filled or unfilled depending on the type of roofing involved and the manufacturer's preference.

Surfacing Materials

Smooth roll roofings, the backs of asphalt shingles, and granular-surfaced roll roofings are usually dusted with pulverized minerals to prevent them from sticking when packaged; talc and mica are the most widely used.

Coarse mineral granules have been employed on the weather face of prepared roofings since 1901, and slate was the first material employed for this purpose. Granular facings greatly improve the resistance to the weather, and they are also used to vary the color and texture of the roofings. Although such natural minerals as slate still find extensive use today, the greater percentage of granular surfacings is synthetically prepared to provide a range of color and brilliance unobtainable in natural minerals.

The colored granules that have proved most satisfactory for use on prepared roofings are:

1. Natural granules, such as various colored slates and gray or green stones.
2. Natural minerals fired at high temperatures, such as shale or clay to which a metallic pigment is sometimes added to provide color. The color may extend throughout the body of the granule or be on the surface.

3. Ceramic granules are manufactured from a crushed base rock, such as trap rock, basalt, or other opaque, weather-resistant rock. They are coated with a mixture of pigment and inorganic bonding material and subsequently fired to insolubilize pigment and binder onto the surface of the granules.
4. Slag granules which may be either blast furnace slag or wet bottom furnace slag. The blast furnace granules are usually used only in headlap surfacing, whereas the wet bottom slag granules are used for exposed area surfacing and headlap.

Any of these four types may be further treated with materials to make them lipophilic and improve their adhesion to asphalt.

Manufacturing Process

Asphalt roofings and shingles are manufactured on high-speed, continuously operating machines; some types are produced at a rate as high as 152 m (500 ft) per minute. The process consists of saturating the felt, coating the surfaces with asphalt, surfacing with asphalt, surfacing with pulverized or granular minerals, cooling, cutting, and packaging (Figure 3).

Dry felt and loopers

A roll of dry felt is installed on the felt reel and is unwound onto the "dry looper," which acts as a reservoir that can be drawn upon by the machine as circumstances demand. This eliminates stoppages, such as when a new roll must be put on the felt reel or when an imperfection in the felt must be cut out.

Saturation of felt

After passing through the dry looper, the felt is subjected to a hot saturating process, usually at a temperature of between 232-260°C (450-500°F). The asphalt saturant fills the voids in the felt, helps bind the felt fibers, and "primes" the felt to assure good coating adhesion and improve the weather resistance of the felt without damaging the weather-resistant coating.

Wet looper

At this point, an excess of saturant usually remains on the surface of the sheet. It is therefore held for a time on a

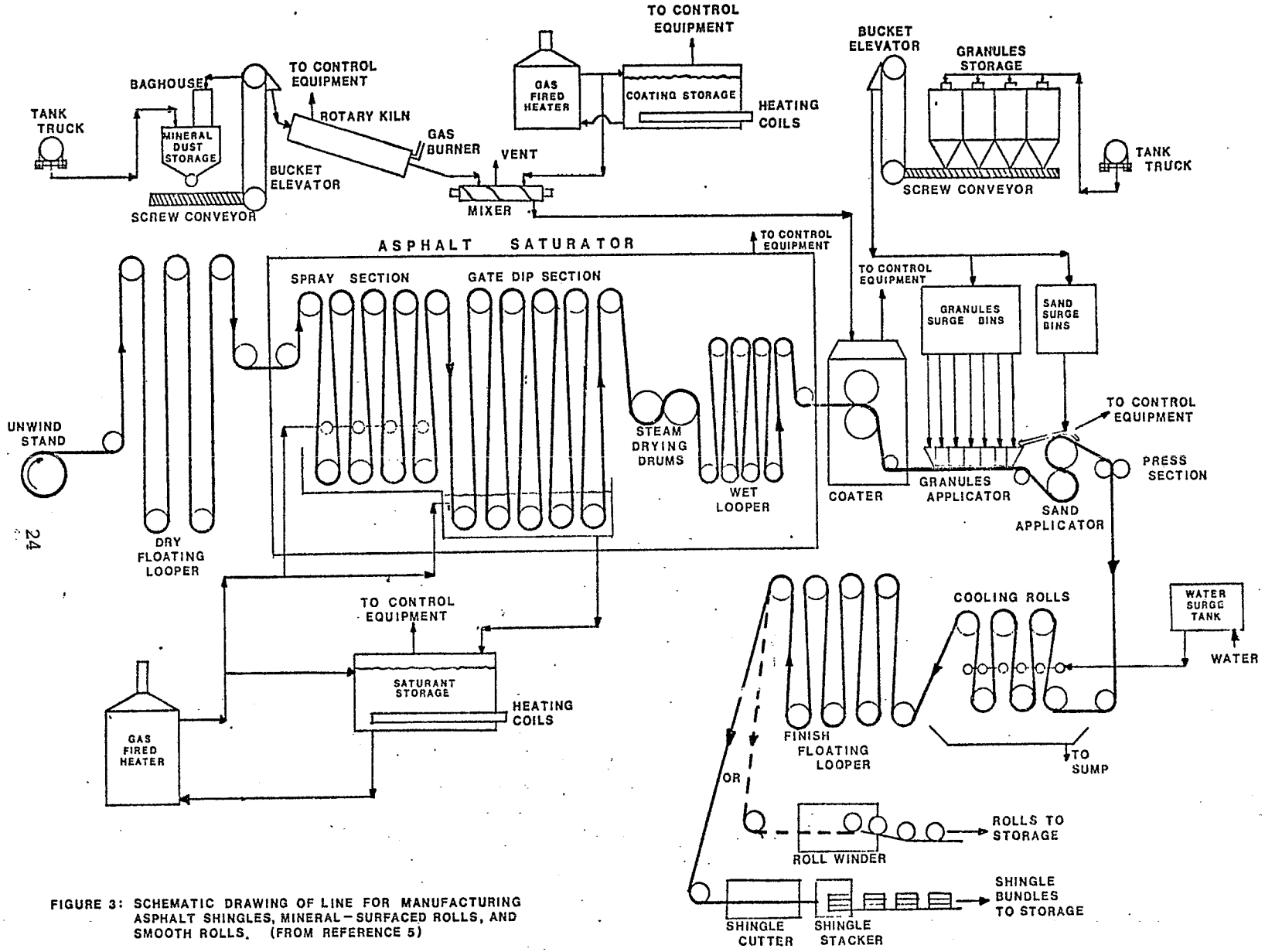

FIGURE 3: SCHEMATIC DRAWING OF LINE FOR MANUFACTURING ASPHALT SHINGLES, MINERAL-SURFACED ROLLS, AND SMOOTH ROLLS. (FROM REFERENCE 5)

wet looper so that the natural shrinking of the asphalt that occurs upon cooling will cause the excess to be drawn into the felt, resulting in a very high degree of saturation.

Coater

The sheet is then carried to the coater where asphalt is applied to both the top and bottom surfaces, usually at a temperature of 177-204°C (350-400°F). The quantity applied is regulated by rolls which can be brought together to reduce the amount or separated to increase it, and this determines the product weight. Many machines are equipped with automatic scales which weigh the sheets in the process of manufacture and warn the operator when the material is running over or under weight specifications.

Mineral Surfacing Application

When smooth-roll roofing is being made, talc or mica or another "parting" agent is applied to the two sides of the sheet and pressed into the coating by rolls. When mineral surfaced products are being prepared, colored granules are added from a hopper and spread thickly on one side. and backing material is applied on the other side. The sheet is then run through a series of cooling and press rolls to properly embed the granules. The temperature at the rolls is usually 107-135°C (225-275°F). The granules must be screened within narrow limits to assure uniform appearance and good adhesion.

Texture

At this point, some products are pressed by an embossing roll which forms a pattern on the surface of the sheet.

Finish or cooling looper

The function of this looper is to cool the sheet so that it can be cut and packed without being damaged. The temperature at the start of the looper is usually 82-93°C (180-200°F) and at the cutter it is usually about 38°C (100°F).

Water or air is used to cool the sheets. Air is used only if the production rate is slow and enough time is available.

The water system involves the use of contact sprays or mist or non-contact cooling drums. These two methods can be used separately or in conjunction with each other.

The amount of water used depends on the production rate, the ambient air temperature, and the type of system used. The non-contact system is essentially a recycling system and the amount of water discharged is less than 2% of the total flow. The amount of water used in the spray system ranges from 1.2 l/cu m (0.03 gal/sq ft) to 412 l/cu m (10.1 gal/sq ft); the latter values are equivalent to about 379-948 cu m/day (0.10-0.25 mgd).

Shingle Cutter

Shingles are made by feeding the material from the finish looper into a cutting machine, where the sheet passes between a cutting cylinder and a pressure roll. The cylinder cuts the sheets from the back or smooth side, and they are then separated into units which accumulate in stacks to be packaged.

Roll Roofing Winder

When roll roofing is being made, the sheet is drawn from the finish looper to the winder where a mandrel measures the length of the material as it turns. When a sufficient amount has accumulated, it is cut off, removed from the mandrel, and wrapped.

Linoleum and Printed Asphalt Felt Plants (SIC 3996)

This subcategory is listed as SIC code group 3996, a miscellaneous category. The industries that fall under it produce floor coverings that are slowly being replaced by the vinyl floor coverings covered under SIC code group 3292, which also encompasses the makers of asphalt tile. The plants covered under SIC code group 3996 are those that make linoleum, printed asphalt felt, and supported plastic floor coverings. The supported plastic floor coverings will not be discussed because they represent such a small part of this subcategory.

Linoleum has a relatively thick wearing surface that extends to a backing of burlap, cotton fabric, or felt. The wearing surface consists of a binder or cement of blown (oxidized) drying oils and resin that is filled with cork, wood flour, mineral filler, or combinations of fillers and pigments. Cork was once the principal filler, but its use has been curtailed, because it cannot be employed in the bright patterns now in demand.

Linoleums fall into four principal classes: plain colored, marbled (jaspe), straight-line inlaid, and molded inlaid.

The marble (jaspe) patterns are prepared by blending mixes of two or more colors to obtain a mottled pattern. Straight-line inlaid is characterized by geometric pieces of several patterns arranged largely in straight lines. The molded-type materials may have many colors arranged in geometric patterns formed by rubbing granular colors through stencils. This material may be embossed, and some patterns simulate ceramic tile.

Printed felt base consists of a baked-enamel decorative coating on an asphalt-saturated felt backing. Although printed asphalt felts are not linoleum, some are sold under that name.

Production of Linoleum

Oxidation of oils and preparation of cement

Linoleum cement is produced by bringing linseed oil or other drying oils into contact with air. The problem of making a satisfactory linoleum cement consists of more than producing a rubber-like binder in which fillers and pigments can be incorporated and calendered to a smooth sheet. The cement must also possess heat reactivity, so it will harden when stoved (a curing process).

Linseed oil is by far the most important base material used in linoleum manufacture. Soybean (soya) oil is also used in appreciable amounts, and its employment appears to be increasing. Linseed oil consists principally of the glyceride of saturated, oleic, linoleic, and linolenic acids. The same esters occur in soybean oil, but differ in that they contain a minor amount of linolenate esters. In addition to the much higher content of the triunsaturated linolenate esters, linseed oil contains a much larger proportion of the total di- and triunsaturated esters than soybean oil. This lower unsaturation in soybean oil is reflected by a longer time for oxidation and stoving, but the final product is very flexible and possesses excellent color.

Before being oxidized, either of the oils used is often put in storage tanks to settle out any solids. The clear oil is then pumped off the top and into long-jacketed, cylindrical kettles where it is agitated by a horizontal shaft and many rotating arms.

The oil is then warmed to start oxidation, and air is blown into the kettles. In some instances, the air is dried since moisture retards oxidation. After the induction period, the

oil evolves heat, and water is circulated to control the temperature of the reaction -- usually below 80°C (176°F). Sometimes the temperature is allowed to rise to 90°C (194°F) and is then decreased to 60°C (140°F). Oxidation takes place more rapidly at higher temperatures, but the color of the oil is better when lower temperatures are employed. During most of the usual 24-hour oxidation period the oil is fairly fluid, but during the last hours, the mix becomes very viscous. In some cases, agitator speed is reduced when viscosity increases. The process ends when the viscosity has risen to the desired value or when the desired "linoxyn" content is reached; "linoxyn" is oxidized material which has polymerized to an insoluble gel.

The blown oil is then poured out and allowed to cool in thick slabs. It is often allowed to age before use, as further hardening occurs. If resins are not incorporated into the oil in the blowing operation, the blown oil is fluxed with resins to form the cement.

Mixing and calendering

After the cement has been formed, linoleum mix is prepared by blending fillers and pigments into the cement. The composition of the mix often varies according to the type of linoleum in which it is to be used. The composition also varies, depending on whether it is to be used in a solid-color, marble (jaspe), straight-line inlaid, or molded inlaid material, or in a wall covering.

Cork has been an important filler in linoleum and in the early years constituted the principal filler, if not the only one. Today the trend has been toward cleaner, brighter colors, and the trend has operated against the use of large amounts of cork in linoleum, since its dark color will be readily apparent. Cork is still used to some extent, but in some patterns it is not used at all. If cork is used, it is first reduced in size in a crusher and then ground in stone mills. The cork is then sieved to size, and the coarse material is reground.

Wood flour has largely supplanted cork as a low-density, toothy filler. Mineral fillers are used with wood flour, and although they are considerably heavier, they are much less susceptible to moisture. Whiting (calcium carbonate) is by far the most frequently used mineral filler. The wood flours used are selected for their light color (usually pine wood) and for their uniformity in texture and particle size to ensure a smooth finish.

In general, the same pigments used in paint production are employed in linoleum manufacturing. Lithopone is regarded as the standard pigment, but titanium dioxide is also employed. Natural ochers have been largely supplanted by synthetic iron oxides. Because colors are now popular, there has been a trend toward using brighter and more stable pigments.

The fillers and pigments are blended with the cement in a series of operations in which the mix is continuously reworked. Its flow properties must be carefully controlled so that it will calender satisfactorily. Mixing formulas for the various types of linoleum vary greatly and pigmentation is changed for the various colors. A representative formulation for linoleum is: 35-45% cement, 25-30% wood flour, 30-40% pigments and whiting, and 10% cork, scrap linoleum, or clay.

The cement, fillers, and pigments are mixed in large steam-jacketed vessels and are then passed through two or three "germans" (machines equipped with a heated cylinder and a screw feed). The mix next passes through rotating knives and is extruded from the mixer in the form of small sausages, which are then pressed between the rolls of a calender to form a blanket. The calender, a wringer type machine, is equipped with a hot top roller and a cold bottom roller. As the blanket is being formed, it sticks to and wraps itself around the hot roller. Another roller, faced with many sharp points, is placed next to the hot roller and picks small particles of the mix from the blanket. This device is known as a "scratcher" and the resulting granulated product is termed "scratch." The scratch, usually particles about 1.6 mm (1/16 in) to 4.7 mm (3/16 in) in diameter, is then either stored or conveyed to another calender for processing. (Figure 4)

For plain colors, a single scratched mix is supplied. One roll is heated; the felt or other backing material is fed onto the other roll, which is cold. The heat and pressure of the rolls consolidate the mix into a smooth sheet and key the mix to the backing material. The calendered sheet passes from the calender into the stoves for curing.

The process is similar for marble (jaspe), except that two or more scratched mixes of different colors are supplied to the calender, which smears the two colors into a longitudinal striation. For certain marble effects one of the colors may be supplied to the calender in pellets of various sizes before the backing is applied. The backing is

FIGURE 4
SCHEMATIC DRAWING
OF LINE
FOR
MANUFACTURING LINOLEUM

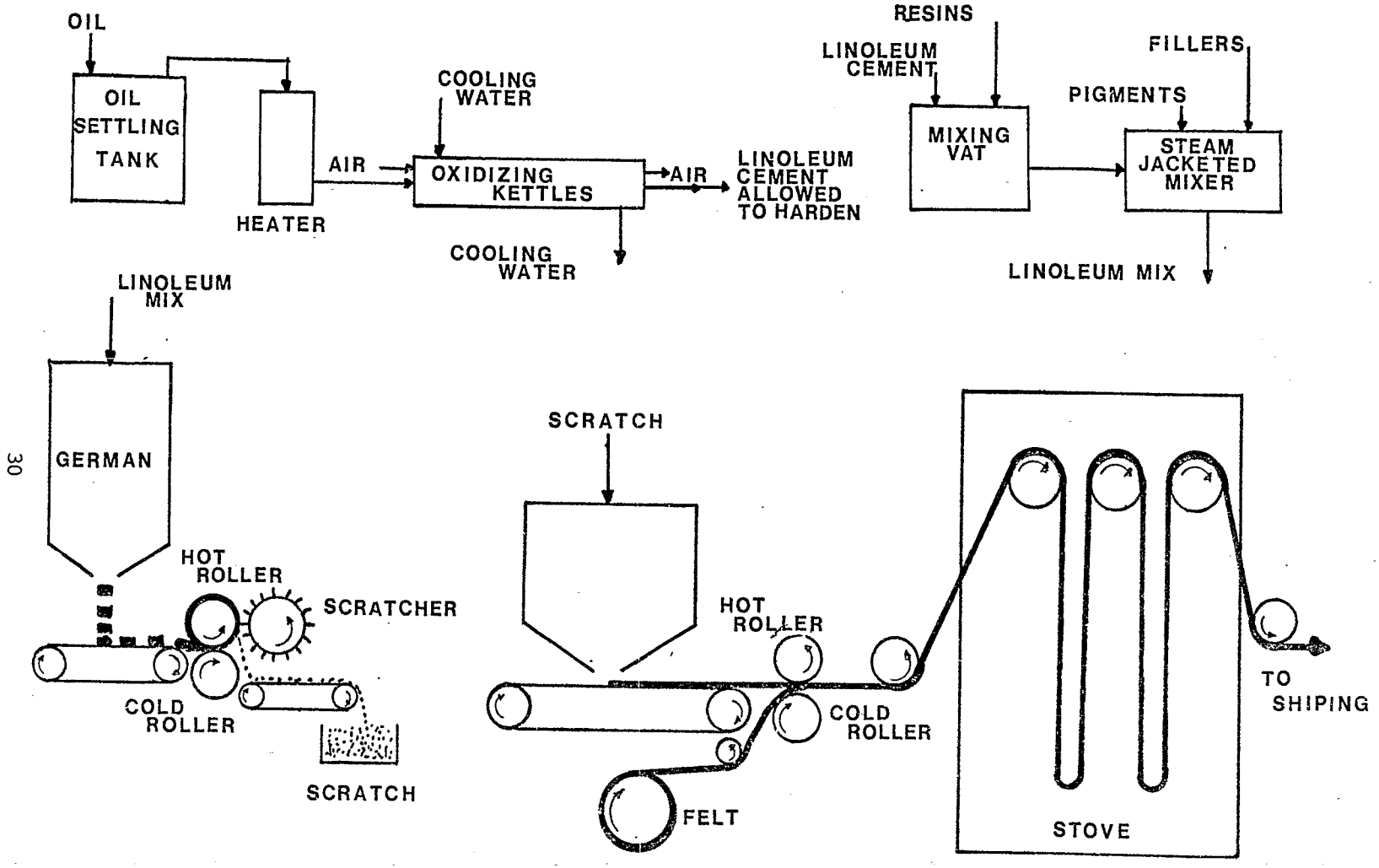

subsequently applied to the sheeted mix and rolled under pressure.

The rotary inlaying process is somewhat different. The mix is first blanketed between rolls without backing and passes down conveyors to inlaying cylinders equipped with knives set in a pattern, which cut out geometrical sections of the sheet and press them against the backing. The remainder of the sheet is reused. Other sheets of different colors and patterns are cut and applied to the backing at subsequent stations to make up the complete design. The various pieces are then consolidated by being passed through heated rollers to key the surface to the backing.

In the manufacture of molded linoleum, the mix is applied in granular form to the backing rather than being made into a blanket. Several different colors are applied through stencils to various parts of the backing until the whole pattern is built up. The backing moves horizontally, stopping at a number of stations where various colors are applied. The loose mix is consolidated by being compressed at 112 kg/sq cm (1600 psi), between the heated platens of a hydraulic press. The sheet is then cured.

Backing

Burlap was the standard backing for linoleum until a shortage of jute during World War II led to a study of replacement materials. Canvas has been used with some success, but felt similar to roofing felt is generally used, particularly in the lighter gages.

Curing linoleum

Linoleum is hung in large ovens to give it the desired surface hardness. A temperature of 66-82°C (150-180°F) is maintained during the maturing. Since maturing does not depend primarily on oxidation, forced circulation of air is not usually provided.

The time in the stove depends principally on the thickness of the linoleum and increases with the gage. Other factors, such as the composition, may have an effect, but play a lesser role in the process. The rate of maturing is carefully controlled, since overstoving can make a product too stiff.

When the linoleum has satisfactorily matured, a process which requires from a few days to seven weeks, the material is removed from the stoves. The surface may then be given a

thin coating of lacquer or wax to protect it during installation. The edges are then trimmed, and the linoleum is inspected for possible surface imperfections. The linoleum is then rolled and crated for shipment.

Production of Printed Felt Base

This low-cost floor covering is produced by printing a heavy film of paint on asphalt-saturated felt to which one or two layers of sealant have been applied to keep the asphalt from discoloring the paint and to level the surface. A backing coat is simultaneously applied. The coating paints used for sealing and leveling the felt contain linseed, soybean, tung, fish or oiticica oil. Natural or synthetic resins are used in these vehicles, and emulsion paints or solvent-thinned vehicles are also employed. The backing is applied with a doctor blade, which smooths the coating and trims the excess. This coating is dried in a heated tunnel. The face of the felt is coated on a revolving drum and the first coating paint is applied with a doctor blade and stoved. A second layer of coating paint is applied, and the coated felt is again dried by festooning in the oven.

The requirements for a satisfactory paint are rather severe since it must: (1) have a low volatility when applied; (2) exhibit little tendency to flow; (3) dry readily in films much thicker than those usually applied in painting operations; and (4) produce a durable, high-gloss wearing surface. The vehicle used in the enamels is comparable to a long-oil varnish. Ester gum "pure" and rosin-modified phenolic resins have been used in the vehicle, and alkyd resins have also been employed. Tung oil is employed in the manufacture of the enamels and its hardness and reduced water susceptibility are desirable qualities. Oiticica oil may also be used in print paints, as well as dehydrated castor oil.

The paint was once printed on the felt base from wooden blocks, but rotogravure printing became more generally employed. Many colors are applied and each is printed separately. The printed felt is then dried in ovens, heated to 66-79°C (150-175°F), either in horizontal racks or in festoons. The felt base matures in a few days and is then inspected, rolled, and packaged for shipment.

SECTION IV

INDUSTRIAL CATEGORIZATION

Categorization

In developing these effluent limitations guidelines for the Asphalt Paving and Roofing Industry, the question arose as to whether limitations and standards are appropriate for different segments (subcategories) within the industry. In arriving at an answer, the following factors were considered:

1. Wastewater characteristics
2. Wastewater treatability
3. Raw materials used
4. Manufacturing processes (operations)
5. Size of facilities
6. Age of facilities
7. Location of facilities

After considering all the parameters, manufacturing processes were selected as the bases for establishing the following subcategories:

1. Asphalt Emulsion Plants
2. Asphalt Concrete Plants
3. Asphalt Roofing Plants
4. Linoleum and Printed Asphalt Felt Plants

Rationale for Selection of Subcategories

Wastewater Characteristics

The waste waters generated originate from one of two processes: cooling or cleanup operations. While there are distinct differences in the quality and quantity of the various wastewaters generated, they are directly related to the product manufactured and the manufacturing process employed. As an example, in plants that produce asphalt concrete, the average flow expected is 68 cu m/day (0.018 mgd) and the average expected suspended solids level is 13,876 mg/l, while in plants that produce asphalt emulsions the average expected flow is 1,895 cu m/day (0.50 mgd) and the expected suspended solids level is 58 mg/l. The suspended solids value is higher for plants that produce asphalt concrete because they use a vast amount of crushed rock and this results in more fines being collected in the

wastewaters. Plants that produce asphalt emulsions use no rock. Since wastes generated are similarly related to products and processes in the remainder of the industry, a subcategorization on this basis is not warranted, because it is effectively accomplished by the manufacturing process employed.

Wastewater Treatability

The waste waters generated by the plants in this industry contain as major pollutants, nonfilterable suspended solids, and freon extractable oil and grease. The suspended solids are usually treated by sedimentation and the oils by a oil skimmer. The concentrations of each parameter may vary within the industry, but they do not warrant subcategorization.

Raw Materials Used

The major raw materials used in the industry is the residual from the distillation of crude oil, called asphalt. By mixing or coating other raw materials with asphalt, different products result. The secondary raw materials are: sand, gravel, organic or asbestos felts, and water. While there are a number of distinctions related to the raw material used, the data collected indicate that the differences are not sufficiently important to form a basis for subcategorization.

Manufacturing Processes (Operations)

The manufacturing processes used in the production of a given product in this industry differ sufficiently to support subcategorization. The principal processes employed in producing asphalt emulsions are forcing hot air through "crude" asphalt and mixing the "oxidized" asphalt with water and a chemical solution.

The process employed to produce asphalt concrete "black top" is simply the mixing of asphalt with crushed rock or gravel.

The process employed to produce asphalt roofing consists of saturating and coating an organic felt with asphalt. The coated felt may then be impregnated with crushed rock on one side.

The processes employed to produce linoleum and printed asphalt felts call for saturating an organic felt with asphalt and then painting or embedding a design on one side of the saturated felt.

Manufacturers of several of the above mentioned products vary their production process, but the resulting differences are too slight to warrant further subcategorization.

Plant Size

Plant size alone was not found to be a factor in further subcategorizing the industry. The operational efficiency, quality of housekeeping, labor availability, and wastewater characteristics of the plants do not differ because of size variations. In some instances, a large plant uses less water than a smaller one because the former employs better housekeeping practices.

Plant size does not affect the type or performance of effluent control measures. As described in Section VII, the basic waste treatment operation for this industry is sedimentation. Design is based on hydraulic flow rate and plants with smaller discharges can use smaller and somewhat less costly treatment units. The approximate daily production ranges for the product categories were reported to be:

	kkg	Tons
Asphalt Emulsions	1,813-9,072	2,000-10,000
Asphalt Concrete	363-1,089	400- 1,200
Asphalt Roofing	181- 635	200- 700
Linoleum-Printed Felts	14- 41	15- 45

Plant Age

The ages of the plants in the industry range from less than one to over 50 years. The manufacturing equipment is often newer than the building housing the plant; in some cases, however, used machines have been installed in new plants. Plant age could not be correlated with operational efficiency, quality of housekeeping, or wastewater characteristics, therefore it is not an appropriate basis for subcategorizing the industry.

Geographic Location

Plants in the asphalt paving industries are located near most, if not all, cities in the United States that house a Federal, State, County, or City highway department. Asphalt roofing plants are located throughout the United States but generally are located along the East, West, and Gulf Coasts. This wide geographic spread may influence the yearly production rate, but the wastewater characteristics are

basically the same. Therefore subcategorization based on geographic location is not warranted.

SECTION V

WASTE CHARACTERIZATION

General Uses

These four subcategories generally use water for cooling, air emission control, and/or cleanup purposes. The quantity of water expended varies, but the wastewaters contain basically the same pollutants.

The waters used for heat-reduction purposes are employed basically in cooling pumps, agitator bearings, rotating shafts, glands, and process controls. In the asphalt roofing subcategory, water is also used to cool asphalt saturated felts before they are packaged. The use of water for air emission control and cleanup purposes are self explanatory.

Specific Uses

Asphalt Emulsion Plants

The major water use at plants in this subcategory is for cooling pumps and process controls. The water is generally noncontact in nature and is, therefore, relatively pollutant free. Runoff caused by precipitation is the only known source of contaminated water. It contains high concentrations of oils; a maximum value of 50 mg/l was reported. At older plants or at plants where poor housekeeping practices are common, the production area grounds are usually saturated with oils and asphalt. At older plants, it used to be common practice to control dust by spraying waste oil on plant grounds. Oil leaking out of pump seals and packing glands and spills at loading docks also tend to saturate the surrounding grounds. When precipitation falls, some of the accumulation is carried off and deposited in nearby receiving waters.

Asphalt Concrete Plants

In this subcategory, water is used only to control air emissions. Various types of water scrubbers are employed to collect dust given off during drying and mixing operations. The characteristics of the raw wastewater were developed from reported data and from telephone conversations. The major constitutents in these wastewaters are:

Parameter	mg/l	kg/kkg*	lb/1,000 lb*
Total Solids	14,568	15.19	15.19
Total Suspended Solids	13,876	14.47	14.47
Alkalinity	420	0.44	0.44

*The average production and flow rate are 544 kkg/day (600 ton/day) and 68 cu m/day (.018 mgd), respectively.

The nature of the solids content varies with geographic location. The type of rock used in the mix depends on its availability. If a carbonate-type rock is used, the amount of solids collected in the wastewater will be higher than if igneous rock is employed. If a limestone rock is used, pH values will be high.

The oil and grease content of the raw wastewater was reported to range from less than detectable to 8 mg/l.

Asphalt Roofing Plants

Water is used in this subcategory to cool the product and process controls. Only 10-25% of the total volume is used for the latter purposes.

The product is cooled by one or both of the following methods. First, water is circulated through cylinders (called cooling drums) around which the saturated felt passes. This water is allowed to cool then is recirculated through the cooling drums. In the second method, a fine mist is sprayed directly on the saturated felt. The volume of water used depends on whether the first method has been employed. If it has been, the rate is 11 l/min (3 gpm), otherwise the rate is 394 to 657 l/min (104 to 174 gpm). When both methods are used very little wastewater is discharged because 75-80% of the small amount of water sprayed on the saturated felt evaporates. When only the second method is used, almost all of the water sprayed onto the saturated felt is discharged. Many plant managers are now using this water for other processes that call for heated water. It should be noted that approximately 50% of the plants in this subcategory produce their own felt. The heated waters can be used as "white water" makeup. The felt making process is covered under the effluent guideline development document entitled "Builders Paper and Board Manufacturing Point Source Category."

The characteristics of the wastewaters from plants in this subcategory were developed from sampling data and from reported values. Typical values for different parameters are:

Parameter	mg/l	kg/kkg*	lb/1,000 lb*
BOD5	12.3	.0154	.0154
Total Solids	546	.6830	.6830
Total Dissolved Solids	277	.3465	.3465
Total Suspended Solids	184	.2302	.2302
Oil-Grease	15.4	.0193	.0193

*The average production and flow rates are 454 kkg/day (500 tons/day) and 569 cu m/day (0.15 mgd), respectively.

The amount of solids present in the wastewater depends on the method of cooling used. Hardly any solids reach the wastewaters if the first method or both methods are used. If only the second method is used, the direct cooling of the saturated felts washes some of the granules off. The nature of these solids depends on the type of crushed rock that is being used. Another source of solids is the backing material (usually mica or talc) employed to keep the finished product from sticking when packaged. When water is sprayed on the felt to cool it some of the backing material is washed off.

Almost all roofing plants have a tower where asphalt is oxidized, and the grounds around it may be saturated with oils and grease. The runoff from such areas is usually sewered along with the cooling waters.

Linoleum and Printed Asphalt Felt Plants

The major source of wastewater in this subcategory is cleanup operations. Water is also used to prepare the dyes which are mixed with the paints, but this water is consolidated with the end product. Solvents are used in certain clean up operations, but the spent solvent is usually reclaimed and the resulting sludges are disposed of in drums.

The characteristics of these cleanup waters in this subcategory were developed from reported data and from plant inspections. Typical values are:

Parameter	mg/l	Kg/kkg*	lb/1,000 lb*
BOD5	8	.0067	.0067
Total Solids	470	.3920	.3920
Total Suspended Solids	11	.0092	.0092
Total Nitrogen	1.3	.0011	.0011
Phenols	0.02	.00002	.00002

*The average production and flow rates are 27 kkg/day (30 tons/day) and 23 cu m/day (0.006 mgd), respectively.

The solids content usually consists of dried paint. The mixing vats in which the dyes are prepared are steam cleaned, and the resulting condensate is the wastewater source.

SECTION VI

POLLUTANT PARAMETERS

Selected Parameters

The chemical, physical, and biological parameters that define the pollutants in wastewaters from this industry are:

Total Suspended Solids
Oils and Grease
pH
Temperature
BOD_5
COD (or TOC)
Dissolved Solids
Nitrogen
Phosphorus
Phenols
Heavy metals

All pollutant parameters except TSS, oils and grease, pH, and temperature are not normally present in high concentrations, but they have been included because significant levels of one or more have been detected in the effluent from individual plants.

Pollutants in non-process wastewater, such as those from boiler blowdown and from water treatment facilities are not included in this document.

The rationale for selecting the listed parameters is given below.

Major Pollutants

Total Suspended Solids

Suspended solids include both organic and inorganic materials. The inorganic components include sand, silt, and clay. The organic fraction includes such materials as grease, oil, tar, animal and vegetable fats, various fibers, sawdust, hair, and various materials from sewers. These solids may settle out rapidly and bottom deposits are often a mixture of both organic and inorganic solids. They adversely affect fisheries by covering the bottom of the stream or lake with a blanket of material that destroys the fish-food bottom fauna or the spawning ground of fish. Deposits containing organic materials may deplete bottom oxygen supplies and produce hydrogen sulfide, carbon dioxide, methane, and other noxious gases.

In raw water sources for domestic use, state and regional agencies generally specify that suspended solids in streams shall not be present in sufficient concentration to be objectionable or to interfere with normal treatment processes. Suspended solids in water may interfere with many industrial processes, and cause foaming in boilers, or encrustations on equipment exposed to water, especially as the temperature rises. Suspended solids are undesirable in water for textile industries; paper and pulp; beverages; dairy products; laundries; dyeing; photography; cooling systems, and power plants. Suspended particles also serve as a transport mechanism for pesticides and other substances which are readily sorbed into or onto clay particles.

Solids may be suspended in water for a time, and then settle to the bed of the stream or lake. These settleable solids discharged with man's wastes may be inert, slowly biodegradable materials, or rapidly decomposable substances. While in suspension, they increase the turbidity of the water, reduce light penetration and impair the photosynthetic activity of aquatic plants.

Solids in suspension are aesthetically displeasing. When they settle to form sludge deposits on the stream or lake bed, they are often much more damaging to the life in water, and they retain the capacity to displease the senses. Solids, when transformed to sludge deposits, may do a variety of damaging things, including blanketing the stream or lake bed and thereby destroying the living spaces for those benthic organisms that would otherwise occupy the habitat. When of an organic and therefore decomposable nature, solids use a portion or all of the dissolved oxygen available in the area. Organic materials also serve as a seemingly inexhaustible food source for sludgeworms and associated organisms.

Turbidity is principally a measure of the light absorbing properties of suspended solids. It is frequently used as a substitute method of quickly estimating the total suspended solids when the concentration is relatively low.

The suspended solids levels in wastewater at plants in these four subcategories vary from a low of less than 10 mg/l to a high of over 35,000 mg/l. The solids are generally heavy and settle quickly. The nature of the solids depends on the plant locale and the type of readily available rock that is used in the processes. Usually when carbonate rocks are used, a higher level of suspended solids results, and a lower level occurs when igneous rocks are employed. If

discharged into a stream or lake, these solids would blanket the bottom, cause turbidity, and possibly harm aquatic life.

Oil and Grease

Oil and grease exhibit an oxygen demand. Oil emulsions may adhere to the gills of fish or coat and destroy algae or other plankton. Deposition of oil in the bottom sediments can serve to inhibit normal benthic growths, thus interrupting the aquatic food chain. Soluble and emulsified material ingested by fish may taint the flavor of the fish flesh. Water soluble components may exert toxic action on fish. Floating oil may reduce the re-aeration of the water surface and in conjunction with emulsified oil may interfere with photosynthesis. Water insoluble components damage the plumage and coats of water animals and fowls. Oil and grease in a water can result in the formation of objectionable surface slicks preventing the full aesthetic enjoyment of the water.

Oil spills can damage the surface of boats and can destroy the aesthetic characteristics of beaches and shorelines.

The oils found at plants in these four subcategories are usually floating oils and their concentrations range from less than 0.1 mg/l to over 50 mg/l.

pH, Acidity and Alkalinity

Acidity and alkalinity are reciprocal terms. Acidity is produced by substances that yield hydrogen ions upon hydrolysis and alkalinity is produced by substances that yield hydroxyl ions. The terms "total acidity" and "total alkalinity" are often used to express the buffering capacity of a solution. Acidity in natural waters is caused by carbon dioxide, mineral acids, weakly dissociated acids, and the salts of strong acids and weak bases. Alkalinity is caused by strong bases and the salts of strong alkalies and weak acids.

The term pH is a logarithmic expression of the concentration of hydrogen ions. At a pH of 7, the hydrogen and hydroxyl ion concentrations are essentially equal and the water is neutral. Lower pH values indicate acidity while higher values indicate alkalinity. The relationship between pH and acidity or alkalinity is not necessarily linear or direct.

Waters with a pH below 6.0 are corrosive to water works structures, distribution lines, and household plumbing fixtures and can thus add such constituents to drinking

water as iron, copper, zinc, cadmium and lead. The hydrogen ion concentration can affect the "taste" of the water. At a low pH water tastes "sour". The bactericidal effect of chlorine is weakened as the pH increases, and it is advantageous to keep the pH close to 7. This is very significant for providing safe drinking water.

Extremes of pH or rapid pH changes can exert stress conditions or kill aquatic life outright. Dead fish, associated algal blooms, and foul stenches are aesthetic liabilities of any waterway. Even moderate changes from "acceptable" criteria limits of pH are deleterious to some species. The relative toxicity to aquatic life of many materials is increased by changes in the water pH. Metalocyanide complexes can increase a thousand-fold in toxicity with a drop of 1.5 pH units. The availability of many nutrient substances varies with the alkalinity and acidity. Ammonia is more lethal with a higher pH.

The lacrimal fluid of the human eye has a pH of approximately 7.0 and a deviation of 0.1 pH unit from the norm may result in eye irritation for the swimmer. Appreciable irritation will cause severe pain.

The wastewaters from these four subcategories may contain carbonate rock dust that results in elevated pH values. The values for pH may range from a low of 5.0 to a high of 12.0. Any values outside the range of 6.0 to 9.0 are harmful to aquatic life.

Other Pollutants

The following parameters were considered in the course of this study, but were not included for either or both of the following reasons: 1) only insignificant amounts were found in the wastewaters; 2) insufficient data were available upon which to base a limitation.

Biochemical Oxygen Demand (BOD)

Biochemical oxygen demand (BOD) is a measure of the oxygen consuming capabilities of organic matter. The BOD does not in itself cause direct harm to a water system, but it does exert an indirect effect by depressing the oxygen content of the water. Sewage and other organic effluents during their processes of decomposition exert a BOD, which can have a catastrophic effect on the ecosystem by depleting the oxygen supply. Conditions are reached frequently where all of the oxygen is used and the continuing decay process causes the production of noxious gases such as hydrogen sulfide and

methane. Water with a high BOD indicates the presence of decomposing organic matter and subsequent high bacterial counts that degrade its quality and potential uses.

Dissolved oxygen (DO) is a water quality constituent that, in appropriate concentrations, is essential not only to keep organisms living but also to sustain species reproduction, vigor, and the development of populations. Organisms undergo stress at reduced DO concentrations that make them less competitive and able to sustain their species within the aquatic environment. For example, reduced DO concentrations have been shown to interfere with fish population through delayed hatching of eggs, reduced size and vigor of embryos, production of deformities in young, interference with food digestion, acceleration of blood clotting, decreased tolerance to certain toxicants, reduced food efficiency and growth rate, and reduced maximum sustained swimming speed. Fish food organisms are likewise affected adversely in conditions with suppressed DO. Since all aerobic aquatic organisms need a certain amount of oxygen, the consequences of total lack of dissolved oxygen due to a high BOD can kill all inhabitants of the affected area.

If a high BOD is present, the quality of the water is usually visually degraded by the presence of decomposing materials and algae blooms due to the uptake of degraded materials that form the foodstuffs of the algal populations.

The BOD_5 levels in the wastewaters from these four subcategories are usually very low -zero to 50 mg/l.

Temperature

Temperature is one of the most important and influential water quality characteristics. Temperature determines those species that may be present; it activates the hatching of young, regulates their activity, and stimulates or suppresses their growth and development; it attracts, and may kill when the water becomes too hot or becomes chilled too suddenly. Colder water generally suppresses development. Warmer water generally accelerates activity and may be a primary cause of aquatic plant nuisances when other environmental factors are suitable.

Temperature is a prime regulator of natural processes within the water environment. It governs physiological functions in organisms and, acting directly or indirectly in combination with other water quality constituents, it affects aquatic life with each change. These effects

include chemical reaction rates, enzymatic functions, molecular movements, and molecular exchanges between membranes within and between the physiological systems and the organs of an animal.

Chemical reaction rates vary with temperature and generally increase as the temperature is increased. The solubility of gases in water varies with temperature. Dissolved oxygen is decreased by the decay or decomposition of dissolved organic substances and the decay rate increases as the temperature of the water increases reaching a maximum at about 30°C (86°F). The temperature of stream water, even during summer, is below the optimum for pollution-associated bacteria. Increasing the water temperature increases the bacterial multiplication rate when the environment is favorable and the food supply is abundant.

Reproduction cycles may be changed significantly by increased temperature because this function takes place under restricted temperature ranges. Spawning may not occur at all because temperatures are too high. Thus, a fish population may exist in a heated area only by continued immigration. Disregarding the decreased reproductive potential, water temperatures need not reach lethal levels to decimate a species. Temperatures that favor competitors, predators, parasites, and disease can destroy a species at levels far below those that are lethal.

Fish food organisms are altered severely when temperatures approach or exceed 90°F. Predominant algal species change, primary production is decreased, and bottom associated organisms may be depleted or altered drastically in numbers and distribution. Increased water temperatures may cause aquatic plant nuisances when other environmental factors are favorable.

Synergistic actions of pollutants are more severe at higher water temperatures. Given amounts of domestic sewage, refinery wastes, oils, tars, insecticides, detergents, and fertilizers more rapidly deplete oxygen in water at higher temperatures, and the respective toxicities are likewise increased.

When water temperatures increase, the predominant algal species may change from diatoms to green algae, and finally at high temperatures to blue-green algae, because of species temperature preferentials. Blue-green algae can cause serious odor problems. The number and distribution of benthic organisms decreases as water temperatures increase above 90°F, which is close to the tolerance limit for the

population. This could seriously affect certain fish that depend on benthic organisms as a food source.

The cost of fish being attracted to heated water in winter months may be considerable, due to fish mortalities that may result when the fish return to the cooler water.

Rising temperatures stimulate the decomposition of sludge, formation of sludge gas, multiplication of saprophytic bacteria and fungi (particularly in the presence of organic wastes), and the consumption of oxygen by putrefactive processes, thus affecting the esthetic value of a water course.

In general, marine water temperatures do not change as rapidly or range as widely as those of freshwaters. Marine and estuarine fishes, therefore, are less tolerant of temperature variation. Although this limited tolerance is greater in estuarine than in open water marine species, temperature changes are more important to those fishes in estuaries and bays than to those in open marine areas, because of the nursery and replenishment functions of the estuary that can be adversely affected by extreme temperature changes.

Thermal increases are caused by contact and non-contact cooling waters. Reported temperatures for effluents reach maximum levels of 71°C (160°F). This water is either recycled into the process water or allowed to cool before being used again as a cooling water.

Dissolved Solids

In natural waters the dissolved solids consist mainly of carbonates, chlorides, sulfates, phosphates, and possibly nitrates of calcium, magnesium, sodium, and potassium, with traces of iron, manganese and other substances.

Many communities in the United States and in other countries use water supplies containing 2,000 to 4,000 mg/l of dissolved salts, when no better water is available. Such waters are not palatable, may not quench thirst, and may have a laxative action on new users. Waters containing more than 4,000 mg/l of total salts are generally considered unfit for human use, although in hot climates such higher salt concentrations can be tolerated whereas they could not be in temperate climates. Waters containing 5,000 mg/l or more are reported to be bitter and act as bladder and intestinal irritants. It is generally agreed that the salt

concentration of good, palatable water should not exceed 500 mg/l.

Limiting concentrations of dissolved solids for fresh-water fish may range from 5,000 to 10,000 mg/l, according to species and prior acclimatization. Some fish are adapted to living in more saline waters, and a few species of fresh-water forms have been found in natural waters with a salt concentration of 15,000 to 20,000 mg/l. Fish can slowly become acclimatized to higher salinities, but fish in waters of low salinity cannot survive sudden exposure to high salinities, such as those resulting from discharges of oil-well brines. Dissolved solids may influence the toxicity of heavy metals and organic compounds to fish and other aquatic life, primarily because of the antagonistic effect of hardness on metals.

Waters with total dissolved solids over 500 mg/l have decreasing utility as irrigation water. At 5,000 mg/l water has little or no value for irrigation.

Dissolved solids in industrial waters can cause foaming in boilers and cause interference with cleanness, color, or taste of many finished products. High contents of dissolved solids also tend to accelerate corrosion.

Specific conductance is a measure of the capacity of water to convey an electric current. This property is related to the total concentration of ionized substances in water and water temperature. This property is frequently used as a substitute method of quickly estimating the dissolved solids concentration.

The dissolved solids levels are high in all four subcategories and range from 60 mg/l to 850 mg/l. These levels do not warrant the added expense of removal.

Nitrogen-Phosphorus

During the past 30 years, a formidable case has developed for the belief that increasing standing crops of aquatic plant growths, which often interfere with water uses and are nuisances to man, frequently are caused by increasing supplies of phosphorus. Such phenomena are associated with a condition of accelerated eutrophication or aging of waters. It is generally recognized that phosphorus is not the sole cause of eutrophication, but there is evidence to substantiate that it is frequently the key element in all of the elements required by fresh water plants and is generally present in the least amount relative to need. Therefore, an

increase in phosphorus allows use of other, already present, nutrients for plant growths. Phosphorus is usually described, for this reasons, as a "limiting factor."

When a plant population is stimulated in production and attains a nuisance status, a large number of associated liabilities are immediately apparent. Dense populations of pond weeds make swimming dangerous. Boating and water skiing and sometimes fishing may be eliminated because of the mass of vegetation that serves as an physical impediment to such activities. Plant populations have been associated with stunted fish populations and with poor fishing. Plant nuisances emit vile stenches, impart tastes and odors to water supplies, reduce the efficiency of industrial and municipal water treatment, impair aesthetic beauty, reduce or restrict resort trade, lower waterfront property values, cause skin rashes to man during water contact, and serve as a desired substrate and breeding ground for flies.

Phosphorus in the elemental form is particularly toxic, and subject to bioaccumulation in much the same way as mercury. Colloidal elemental phosphorus will poison marine fish (causing skin tissue breakdown and discoloration). Also, phosphorus is capable of being concentrated and will accumulate in organs and soft tissues. Experiments have shown that marine fish will concentrate phosphorus from water containing as little as 1 ug/l.

Nitrogen levels in raw wastewaters from these subcategories are normally low; they usually range from less than 0.1 mg/l to 21.79 mg/l of total nitrogen. Nitrogen was included because at this level, it could influence eutrophication rates in some water bodies.

Phosphorus levels reported in the wastewaters from these subcategories range from 0.01 mg/l to 3.38 mg/l This element can also influence eutrophication and should be monitored to ensure that levels are acceptably low.

Phenols

Phenols and phenolic wastes are derived from petroleum, coke, and chemical industries; wood distillation; and domestic and animal wastes. Many phenolic compounds are more toxic than pure phenol; their toxicity varies with the combinations and general nature of total wastes. The effect of combinations of different phenolic compounds is cumulative.

Phenols and phenolic compounds are both acutely and chronically toxic to fish and other aquatic animals. Also, chlorophenols produce an unpleasant taste in fish flesh that destroys their recreational and commercial value.

It is necessary to limit phenolic compounds in raw water used for drinking water supplies, as conventional treatment methods used by water supply facilities do not remove phenols. The ingestion of concentrated solutions of phenols will result in severe pain, renal irritation, shock and possibly death.

Phenols also reduce the utility of water for certain industrial uses, notably food and beverage processing, where it creates unpleasant tastes and odors in the product.

The presence of measurable phenol levels has been reported in wastes from all four subcategories, but the levels reported were all less than 1 mg/l. Even though the levels are low, these chemicals can cause serious taste and odor problems in the receiving water. Phenol discharges should be monitored to ensure that levels are acceptably low.

Heavy Metals

Individual plants have reported that one or more of the following metals were present in trace quantities in their effluents: cadmium, chromium, copper, iron, lead, nickel, zinc, aluminum, calcium, fluoride, chloride, magnesium, and potassium.

Several of the plants also reported that arsenics and cyanides were present. These materials, which originate in the stone or rock that is used, were at levels well below those specified as being safe for drinking water.

SECTION VII

CONTROL AND TREATMENT TECHNOLOGY

Summary

The discharge of wastewater from mills in the asphalt paving, roofing, and flooring industries into receiving waters can be reduced to required levels by the conscientious application of established in-plant controls against process losses and water recycling measures and by well-designed and operated external treatment facilities.

This section describes in-plant and external technologies which are in wide use or are under development to achieve various levels of pollutant reduction. External technology is used to achieve the final reduction of pollutants discharged to receiving waters.

Treatment

Sedimentation and various auxiliary operations yield an effluent that has a low pollution potential when properly applied. The settled solids are inert, dense, and suitable for disposal in a landfill.

Treatment beyond sedimentation and oil control is not necessary for wastes from this industry. The only pollutant constituent present at significant levels is dissolved solids. While these may be found at undesirably high levels in certain industrial water uses, they do not present serious hazards to human health or to aquatic life. To remove the dissolved solids would require advanced treatment techniques, e.g., reverse osmosis, electrodialysis, or distillation. The initial and annual costs associated with such operations are so high that alternative solutions--complete recycle of wastewaters--will be implemented by the industry instead of providing further treatment.

During the course of the study carried out to prepare this document, it was found that approximately 3,100 plants in this industry are considering, developing, or implementing the complete recirculation of wastewaters. This estimate is based on statements made by the industry that approximately 80% of the plants are currently recycling their production waters.

Implementation

The in-plant control measures and end-of-pipe treatment technology outlined below can be implemented as necessary throughout the industry. Factors relating to plant and equipment age, manufacturing process and capacity, and land availability do not play a significant role in determining whether a given plant can make the changes. Implementation of a particular control or treatment measure will involve approximately equal degrees of engineering and process design skill and will have the same effects on plant operations, product quality, and process flexibility at all locations.

In-Plant Control Measures

Many plants in this industry incorporate some in-plant practices that simultaneously reduce the release of pollutant constituents and result in economic benefits, e.g., reduced water supply or waste disposal costs, or both.

Wastewater Segregation

In all cases, sanitary sewage should be disposed of separately from process wastewaters. Public health considerations as well as economic factors dictate that sanitary wastes not be combined with these wastewaters.

Housekeeping Practices

Conscientious housekeeping is by far the most important in-house measure that influences wastewater characteristics. If all sump areas are kept clean and open and all loose materials are swept up, the amount of solids reaching the final discharge point will be drastically reduced.

Water Usage

Fresh water should be used first for pump seals, steam generation, showers, and in similar applications where high contaminated levels cannot be tolerated. The discharges should then go into the manufacturing process as make-up water and for other purposes when water quality is less critical.

Water conservation equipment and practices should be installed to prevent overflows, spills, and leaks. Plumbing arrangements that discourage the unnecessary use of fresh water should be incorporated.

Control Measures By Subcategory

Asphalt Emulsion Plants

Approximately eight plants in this subcategory are currently recycling some of their cooling waters by using a cooling tower or a cooling basin. To control contaminated runoff, all areas where spills have occurred or where one might occur, have been paved to collect runoff or collection sumps have been constructed under the areas. The cooling water flow is typically in the range of .105 to .418 cu m/kkg (25 to 100 gal/ton) of product.

Asphalt Concrete Plants

Approximately 3,100 plants in this subcategory are currently practicing complete recycle and 1,200 use no water at all. Typical flows from a wet collection system are in the range of 0.094 to 0.125 cu m/kkg (22.5 to 30 gal/ton) of product.

Asphalt Roofing Plants

Approximately 23 plants in this subcategory practice some sort of recycle. A major factor that is considered in recycling water is its dissolved solids content. Several of the plants that recycle their contact cooling water have found that high levels of dissolved solids cause some discoloration in the product. These levels vary so much that no determination has yet been made as to what levels cause discoloration. The darker the coating granules are, the higher the dissolved solids content can be before discoloration begins.

The success of these 23 plants proves that water usage can be cut down in this subcategory. Splash or spray water can be eliminated if cooling drums are installed. The cooling drums represent essentially a noncontact system, and the water used is relatively pollutant free. In some cases, a fine mist spray is used in conjunction with the cooling drums. The mist is sprayed only on the back of the saturated felt and almost 75-80% of this water is evaporated.

Good housekeeping practices in this subcategory will prevent high concentrationsof solids from entering the wastewater. If all sump areas are kept clean and all loose material on the floors are kept swept up, the concentrations of suspended solids are usually in the range of 100 to 884 mg/l.

Typically wastewater flows from plants in this subcategory are influenced by the type of cooling system used. The range of flow therefore is 1.49 to 2.09 cu m/kkg (357 to 500 gal/ton) of product.

Linoleum and Printed Asphalt Felt Plants

The only known in-house method used to reduce pollutant concentrations is good housekeeping practices. All wash waters flow into sumps where the solids settle and are removed. If these sumps are kept clean, the solids concentrations can be kept low. Typical flow ranges at these plants are .57 to .93 cu m/kkg (133.33 to 222.22 gal/ton) of product.

Treatment Technology

Most plants in this industry treat their raw wastewaters in some way before discharging them. In virtually all cases, this treatment is sedimentation. Fortunately, the waste solids are dense and almost any period of detention will accomplish major removals.

Technical Considerations

Sedimentation is the oldest of all treatment unit operations in sanitary engineering practices. It is well understood and its costs, ease of operation, efficiency, and reliability make it ideally suited for industrial application.

Application

Sedimentation is an appropriate form of treatment for this industry regardless of plant size and capacity, manufacturing process, and plant and equipment age. Design is based on the hydraulic discharge and plants with smaller effluent volumes can use smaller units. The treatment system can be sized to accommodate surges and peak flows efficiently. Because wastes from this industry are basically inert biologically, overdesign does not result in solids management problems.

Land Requirements

If necessary, complete settling facilities large enough to treat the waste flows can be placed on an area no larger than 0.1 hectare (0.25 acre). Land is usually available to cover the settled solids.

Control and Treatment Technologies By Subcategory

Asphalt Emulsion Plants

External control at the plants in this subcategory involves the collecting of the entire runoff flow from the plant production area. This can be achieved by diking the perimeter of the plant area or by putting in a sewer collection system; the runoff can then be treated at a common point.

Various methods can be used to separate oils from the wastewater, but the device commonly used in this subcategory is an oil skimmer. Since the oils encountered are relatively insoluble and float on the surface of the wastewater, a good operating system can remove from 75-85% of them. Other systems may be used, such as air flotation, emulsion breaking, or deep bed filters, but their high initial and operating costs may not make them economical for all plants in the subcategory.

Asphalt Concrete Plants

The external controls at these plants involve treating the wastewater from a wet collection system for air emissions. The wastewater has a very high concentration of suspended solids that settle readily. Sedimentation works well with this type of wastewater, and an earthen stilling basin or a mechanical sedimentation basin can be used. The first type is commonly found at large stationary plants because land is available, and usually a worked-out gravel pit is used. A portable mechanical sedimentation basin has been used at mobile plants, but the earthen stilling basin is the system usually used. No other system can be used to remove suspended solids economically, because of the large quantity involved. The quantity of solids present in the wastewaters depends on the type of rock being used in the product. A carbonate-type rock produces more dust and fine granules when crushed than igneous-types. For example, 1,360 kg (3,000 lb) of solids can settle out at a 181 kkg (200 ton) per-hour plant. The solids that are removed from the settling system are allowed to dry and are then landfilled. The landfill need not be lined because the nature of the solid does not harm the surrounding area.

Asphalt Roofing Plants

The external controls at plants in this subcategory are such that either a sedimentation or filter unit can be used to remove the suspended solids present in the wastewater.

Sedimentation can be accomplished in an earthen stilling basin or a mechanical sedimentation basin. Both can achieve the desired effluent quality, but the choice of which to use depends on land availability.

Rapid sand filters and clarifiers can also be used to achieve the desired effluent quality needed by 1977, but their initial and operating costs may be too high for some of the plants in this subcategory.

The 1983 limits are lower than the 1977 requirements, therefore, the above methods may have to be used. If the plants use the splash type cooling method, large amounts of the backing material (mica or talc) are washed off. To meet the 1983 suspended solids limit, either additional time is needed for sedimentation or a clarifier must be used. Depending on the quantity and type of this fine suspended material, coagulants may have to be used. The resulting sludge is landfilled. The nature of this sludge does not warrant the use of lined disposal pits.

Linoleum and Printed Felt Plants

External controls for this subcategory involve passing the wastewater through an earthen stilling basin or a mechanical sedimentation basin. The wastewater flow from plants in this subcategory contains suspended solids that settle readily. These settled solids may contain potentially harmful materials. In some cases, settled solids may need to be disposed of in a manner that will not harm the environment.

SECTION VIII

COST, ENERGY, AND NON-WATER QUALITY ASPECTS

Introduction

The plants used to develop representative treatment cost information were selected because of the relatively high quality of their treatment facilities, the quantity of wastewater discharged, the availability of their cost data, and the adequacy of verified information about the effectiveness of the treatment facility. The plants used typical, standard manufacturing processes and incorporated some of the in-plant contacts described in Section VII.

The end-of-pipe control technologies were designed, for cost purposes, to require minimal space and land area. It is believed that no additional land would be required at most plants. At locations with more land available, larger, more economical facilities of somewhat different design, but equal efficiency, could be used.

This cost information is intended to apply to most plants in these four subcategories. Differences in age or size of production facilities, level of implementation of in-plant controls, manufacturing process, and local non-water quality environmental aspects all reduce to one basic variable, the volume of wastewater discharged.

Cost Information

Costs that were considered in this document are investment and annual costs, which are based on the 1973 dollar.

Investment Cost
- Design
- Land
- Mechanical and electrical equipment
- Instrumentation
- Site preparation
- Plant sewers
- Construction work
- Installation
- Testing

Annual Cost
- Interest
- Depreciation

Operation and maintenance
Energy

Investment Costs

Investment costs are defined as the capital expenditures required to bring the treatment or control technology into operation. Included, as appropriate, are the cost of excavation ($3.00/cu yd), concrete ($1.00/sq ft for 4 in. thick slabs and $140.00/cu yd for wall construction), mechanical and electrical equipment installed (varies with type), piping ($6.50/ft), grating ($2.40/ft), and transportation ($6.00/ton). Additional amounts equal to 10% and 25% of the total of the above were added to cover engineering design services and construction supervision, respectively. Also an additional 10% of the total amount was added to cover unforeseen costs for new sources (30% for old sources). It is believed that the interruptions required for installation of control technologies can be coordinated with normal plant shut-down and vacation periods in most cases. As noted above, the control facilities were estimated on the basis of minimal space requirements. Therefore, no additional land, and, hence no cost, would be involved for this item.

Capital Costs

The capital costs are calculated as 10% of total investment costs.

Depreciation

Straight-line depreciation for 10 years or 10% of the total investment cost is used in all cases.

Operation and Maintenance Costs

Operation and maintenance costs include labor, materials, any solid waste disposal, effluent monitoring, added administrative expenses, taxes, and insurance. Manpower requirements were based on the typical number of personnel needed to operate the required control facilities. A salary cost of $10 per man-hour was used. The costs of chemicals used in treatment were added to the costs of materials used for operation and maintenance.

The costs of solid waste handling and disposal were based primarily on information supplied by officials operating solid waste handling facilities.

Energy and Power Costs

Power costs were estimated on the basis of $0.025 per kilowatt hour.

Costs By Subcategory

Asphalt Emulsion Plants

All costs for this subcategory were determined for a plant which has a 4 hectare (10 acre) production area and has no means to collect runoff.

Best Practicable Control Technology Currently Available (BPCTCA)

As stated in Section IX, all runoff from the production area should be collected and treated. Installation and operating costs that would be incurred at a typical size plant, are presented in Table 11. It was assumed that: (1) no more than three inches of rain will fall during a 24-hour period; (2) a peripheral collection system is necessary and that a gravity separator is needed to treat the runoff.

Best Available Technology Economically Achievable (BATEA)

BATEA for the typical asphalt emulsion plant consists of a sedimentation basin where additional removal of oils and suspended solids can be achieved. The incremental costs of achieving BATEA are shown in the second column of Table 11.

TABLE 11

Treatment Costs in Dollars
For Asphalt Emulsion Plants*

Type of Cost	Technology Level BPCTCA	BATEA+	NSPS
Total Investment Cost	73,290	7,500	72,000
Capital Cost	7,330	750	7,200
Depreciation and Interest	7,330	750	7,200
Operation and Maintenance	1,250	625	1,250
Energy	190	100	190
Total Annual Cost	16,100	2,225	15,840
Cost per kkg per day	0.01	0.002	0.01

*Daily Production 5,443 kkg (6,000 ton)
+Marginal costs after BPCTCA has been achieved.

New Source Performance Standards (NSPS)

It is recommended that new sources be required to install control equipment equivalent to BATEA, and the costs for doing this at a typical plant are shown in the third column of Table 11. They are lower than the total for BPCTCA and the incremental costs of BATEA, because of the reduced expense associated with the construction and installation of new facilities.

Asphalt Concrete Plants

Plants in this subcategory have production capacities ranging from 91 to 363 kkg/hr (100-400 ton/hr), but during an average work day, the expected time of actual mixing is from 2 to 4 hours. On some occasions this range may be 10-12 hrs., and again it may be 1-2 hours. The length of actual operation depends on the season, and the type of job being done.

About 90% of the plants in this subcategory meet the 1977 requirement for BPCTCA, but for cost estimation, plants with little or no treatment were used. The basic assumptions that were used to develop costs are: (1) The daily production levels used were 340 kkg/day (375 ton/day), 544 kkg/day (600 ton/day), and 851 kkg/day (938 ton/day); (2)

the average expected wastewater flow is 1.04 cu m/kkg (250 gal/ton); (3) a pond large enough to give a 2 hour detention time; (4) the solids collected per hour of operation amount to 1,361 kg (3,000 lb); (5) the pond will be cleaned every month.

A mechanically cleaned settling tank was considered, but its high initial and operating costs obviated its use.

The level of treatment required of this subcategory for 1977 is the same as that required in 1983; also new Source Performance Standards are the same, namely, no discharge.

The incremental costs of applying BPCTCA, BATEA, and NSPS for each of the three daily production levels are listed in Table 12.

TABLE 12

Treatment Costs in Dollars
For Asphalt Concrete Plants*

Type of Cost	Daily Production Levels 340 kkg (375 ton)	544 kkg (600 ton)	851 kkg (938 ton)
Total Investment Cost	4,600	5,550	6,400
Capital Cost	460	555	640
Depreciation and Interest	460	555	640
Operation and Maintenance	5,700	7,265	9,600
Energy	1,375	2,100	3,325
Total Annual Cost	7,995	10,475	14,205
Cost per kkg per day	0.12	0.10	0.08

*The costs needed to achieve BPCTCA, BATEA, and NSPS are the same.

Asphalt Roofing Plants

The typical plant is assumed to have a capacity of 454 kkg/day (500 ton/day) and a wastewater flow of 569 cu m/day (0.15 mgd).

Best Practicable Control Technology Currently Available (BPCTCA)

At the majority of plants in this subcategory, large suspended materials are settled in a pond or detention sump before the effluent is discharged. BPCTCA requires that all plants employ primary settling. The costs of BPCTCA have been developed for situations in which: (1) an earthen stilling basin is installed; (2) a steel or concrete settling tank is used. It is assumed that: (1) both are cleaned monthly by manual methods; (2) sprays or mists are installed to reduce the volume of wastewater; (3) the use of coagulants is not needed.

The costs of applying BPCTCA in each situation are shown in the first column of Tables 13 and 14, respectively.

Best Available Technology Economically Achievable (BATEA)

Since BATEA assumes that coagulants will be needed to settle out more suspended solids, the costs of applying BATEA allow for expenses incurred in having the resulting sludge removed continuously and mechanically. It is assumed, therefore, that the earthen stilling basin which is acceptable under BPCTCA is replaced by a settling tank. The incremental costs of achieving BATEA (depending on which settling method is used under BPCTCA) are shown in the second column of Tables 13 and 14.

TABLE 13

Treatment Costs in Dollars
For Asphalt Roofing Plants*
Earthen Stilling Basin Used

Type of Cost	Technology Level BPCTCA	BATEA+
Total Investment Cost	5,125	50,000
Capital Cost	510	5,000
Depreciation and Interest	510	5,000
Operation and Maintenance	1,600	10,000
Energy	100	375
Total Annual Cost	2,720	20,375
Cost per kkg per day	0.024	0.18

*Daily Production 454 kkg (500 ton)
+Marginal costs incurred after BPCTCA has been achieved.

TABLE 14

Treatment Costs in Dollars
For Asphalt Roofing Plants*
Settling Tank Used

Type of Cost	Technology Level BPCTCA	BATEA+	NSPS
Total Investment	24,000	29,500	53,500
Capital Cost	2,400	2,950	5,350
Depreciation and Interest	2,400	2,950	5,350
Operation and Maintenance	1,720	7,500	9,220
Energy	190	280	470
Total Annual Cost	6,710	13,680	20,379
Cost per kkg per day	0.059	0.12	0.18

*Daily Production 454 kkg (500 ton)
+Marginal costs incurred after BPCTCA has been achieved.

New Source Performance Standards (NSPS)

NSPS require that the equivalent of BATEA be applied. The total costs are shown in the third column of Table 14 only because it is assumed that a new source would use a settling tank and a continuous, mechanical method of sludge removal.

Linoleum and Printed Asphalt Felt Plants

The typical plant has a capacity of 27 kkg/day (30 ton/day) and a wastewater flow of 23 cu m/day (0.006 mgd). It is assumed that the wastewater is not treated.

Best Practicable Control Technology Currently Available (BPCTCA)

BPCTCA requires that suspended solids be settled out of the wastewater prior to discharge. The cost estimate assumes that a settling tank is installed and that the sludge is manually removed from it at recurring intervals (Table 15).

TABLE 15

Treatment Costs in Dollars
For Linoleum and Asphalt Felt Plants*

Type of Cost	Technology Level BPCTCA	BATEA+	NSPS
Total Investment	3,600	2,500	6,100
CapitalCost	360	250	610
Depreciation and Interest	360	250	610
Operation and Maintenance	625	1,400	2,000
Energy	100	470	570
Total Annual Cost	1,445	2,370	3,790
Cost per kkg per day	0.21	0.35	0.56

*Daily Production 27 kkg (30 ton)
+Marginal costs incurred after BPCTCA has been achieved.

Best Available Technology Economically Achievable (BATEA)

BATEA requires that coagulants be used to increase the amount of suspended materials removed. The costs are shown in the second column of Table 15.

New Source Performance Standards (NSPS)

NSPS requirements dictate that BATEA be applied. Costs are shown in the third column of Table 15.

Solid waste control must be considered. The waterborne wastes from linoleum and printed asphalt felt plants may contain toxic or potentially hazardous substances in various forms as a part of the suspended solids pollutant. Best practicable control technology and best available control technology as they are known today, require that the disposal of pollutants be removed from wastewaters in these plants in the form of solid wastes and liquid concentrates. In some cases, these are non-hazardous substances requiring only minimal custodial care. However, some constituents may be hazardous and may require special consideration. In order to ensure long term protection of the environment from these hazardous or harmful constituents, special consideration of disposal sites must be made. All land fill sites where such hazardous wastes are disposed should be

selected so as to present horizontal and vertical migration of these contaminants to ground or surface waters. In cases where geologic conditions may not reasonably ensure this, adequate precautions (e.g., impervious liners) should be employed to ensure long term protection to the environment from hazardous materials. Where appropriate, the locations of hazardous materials disposal sites should be permenently recorded in the appropriate office of the legal jurisdiction in which the sites are located.

SECTION IX

BEST PRACTICABLE CONTROL TECHNOLOGY CURRENTLY AVAILABLE

The effluent limitations which must be achieved by July 1, 1977, are to specify the degree of effluent reduction attainable through the application of the best practicable control technology currently available (BPCTCA). BPCTCA is generally based on the average of the best levels being achieved by plants of various sizes, ages, and unit processes within the subcategory. Consideration was also given to:

1. The total cost of application of technology in relation to the effluent reduction benefits to be achieved from such application.
2. The size, age of equipment, and facilities involved.
3. The processes employed.
4. The engineering aspects of the application of various types of control techniques.
5. Process changes
6. Non-water quality environmental impact, including energy requirements.

BPCTCA emphasizes treatment facilities employed at the end of a manufacturing process but includes the control technologies within the process itself when the latter are considered to be normal practice within the industry.

A further consideration is the degree of economic and engineering reliability which must be established for the technology to be "currently available." As a result of demonstration projects, pilot plants, and general use, there must exist a high degree of confidence in the engineering and economic practicability of the technology at the time construction starts or control facilities are installed.

Asphalt Emulsion Plants

As discussed in Sections III through VII, water is used only for cooling purposes. Since this water is a non-contact type, it contains no pollutants, and its temperature increases only slightly. The water is commonly pumped through cooling towers or basins and is then discharged or returned for reuse. The flow varies from 190 to 3,790 cu m/day (0.05 to 1.0 mgd).

As stated before, the only sources of contaminated water in this subcategory is runoff caused by precipitation and/or water collected from the wet air scrubber systems. These wastewaters are pumped through oil skimmers to remove the oils that are present.

The most common treatment method used in this subcategory is to collect all runoff flow from the production area and pump it through a gravity oil skimmer. The wastewater from the wet air scrubber is also pumped to the oil skimmer.

Since these contaminated waters are not a function of production but depend on climatology, BPCTCA is based on the following wastewater flow assumptions which are derived from information presented in Section V:

1. Production Area Size: that area in which the oxidation towers, loading facilities, and all buildings that house product processes are located. The average size was determined to be approximately 4 hectares (10 acres).
2. Amount of Precipitation: the average daily rainfall for the entire United States was determined to be 7.62 cm (3 in).

The limitations are based on the following removal efficiencies:

Oil and Grease: 75-85%

When the above technology is implemented there is no significant non-water quality impact, and the solid wastes generated are landfilled.

The above control facilities are currently in use at 18 plants located throughout the United States as listed below:

State	Number of facilities
California	4
Colorado	1
Delaware	1
Indiana	1
Maryland	1
New Jersey	2
Ohio	3
Oklahoma	1
Oregon	1
Texas	3

Based on the information contained in Sections III through VIII and summarized above, a determination has been made that the degree of effluent reduction attainable and the maximum allowable discharge within this subcategory through the application of BPCTCA are as follows:

	Oil-Grease (kg/cu m)	Oil-Grease (lb/1,000 gal)	pH (units)
30-day average	0.015	0.125	6.0-9.0
Maximum daily	0.020	0.167	6.0-9.0

Asphalt Concrete Plants

The manufacture of asphalt concrete may or may not result in the generation of wastewater depending on the type of air emission control equipment used. The unit operations required were discussed in detail in Section III, the wastes derived from the operation were characterized in Section V, and treatment and control technology was detailed in Section VII.

Any wastewater generated is pumped into earthen stilling ponds where settling occurs. The resulting clear water is recycled through the scrubber systems, and the settled solids are dredged out and landfilled. This control method is commonly used at over 3,100 plants in this subcategory, according to industry estimates.

Based on the information contained in Sections III through VIII and summarized above, a determination has been made that the degree of effluent reduction attainable through the application of BPCTCA is no discharge of wastewaters to navigable waters.

Asphalt Roofing Plants

As discussed in Sections III through VII, the primary use of water is for cooling purposes. The water may be a contact or non-contact type. The majority of the plants in this subcategory utilize a non-contact cooling method supplemented by contact cooling water in the form of a spray.

The wastewater from the non-contact cooling system is pumped to cooling basins or cooling towers to lower its temperature, and it is then recycled through the system. As stated in Section V, if the plant produces its own felt, this heated water may be used as make-up water in the white water system. The spray water is the only known source of

contaminated water. The flow, which varies from 11 to 657 l/min (3-174 gpm), is pumped into settling tanks or ponds. The settled sludge is usually dredged out and landfilled. The resulting clearwater is then recycled or discharged.

The above control facilities are currently in use at 46 plants located throughout the United States, as listed below:

State	No. of facilities
Alabama	1
California	7
Colorado	2
Florida	1
Georgia	2
Illinois	4
Indiana	2
Maryland	2
Massachusetts	2
Minnesota	2
New Jersey	3
North Carolina	1
Ohio	2
Oklahoma	2
Oregon	3
Pennsylvania	1
Tennessee	1
Texas	8

Runoff from the asphalt storage areas and from the oxidization tower area contain oil and grease in concentrations that may present problems in receiving waters. With the utilization of good housekeeping practices these concentrations of oil and grease can be kept low.

BPCTCA for this subcategory is based on the following production raw waste and wastewater flow assumptions, which have been derived from information presented in Section V:

Average Production Rate: 454 kkg/day (500 ton/day)
Average Effluent Discharge Rate: 569 cu m/day (0.15 mgd)
Average Daily Suspended Solids Concentration: 184 mg/l

The limits are based on the following removal efficiencies:

Suspended Solids: 85-95%

Based on the information contained in Sections III through VIII and summarized above, a determination has been made that the degree of effluent reduction attainable and the maximum allowable discharge in this subcategory through the application BPCTCA are as follows:

	Suspended Solids (kg/kkg)	Suspended Solids (lb/1,000 lb)	pH (units)
30-day average	0.038	0.038	6.0-9.0
Maximum daily	0.056	0.056	6.0-9.0

Linoleum and Printed Asphalt Felt Plants

As discussed in Sections III through VII, the primary use of water in this subcategory is for clean-up operations. The amount used varies from 8-38 cu m/day (0.002-0.01 mgd). The wastewater is pumped to sumps, which act as settling pits, and is then discharged. The settled material is usually disposed of in sealed containers, because some potentially harmful materials may be present.

BPCTCA is based on the following production raw waste and wastewater flow assumptions, which have been derived from information presented in Section V:

Average Production Rate: 27 kkg/day (30 ton/day)
Average Effluent Discharge Rate: 23 cu m/day (0.006 mgd)
Average Daily Suspended Solids Concentration: 11 mg/l

The limits are based on the following removal efficiencies:

Suspended Solids: 85-95%

Based on the information contained in Sections III through VIII and summarized above, a determination has been made that the degree of effluent reduction attainable and the maximum allowable discharge in this subcategory through the application of BPCTCA are as follows:

	Suspended Solids (kg/kkg)	Suspended Solids (lb/1,000 lb)	pH (units)
30-day average	0.025	0.025	6.0-9.0
Maximum daily	0.038	0.038	6.0-9.0

Pretreatment Standards for Existing Sources

Of the 4,800 plants covered under the asphalt concrete subcategory, none is known to discharge wastewater into a city sewer system, but approximately 200 of the 300 plants covered in the other three subcategories use this method. Except for oils, which have a petroleum origin, and are in low concentrations in all but the asphalt emulsion subcategory, the wastewaters from these four subcategories do not contain any pollutants that are classified as incompatible. All major contributing industries may have to pretreat their incompatible wastes if over the specified limit. As defined, a major contributing industry is an industrial user of the publicly owned treatment works that:

1. has a flow of 190 cu m (50,000 gal) or more per average work day.
2. has a flow greater than 5% of the flow carried by the municipal system receiving the waste.
3. has in its waste, a toxic pollutant in toxic amounts as defined in standards issued under Section 307(a) of the act.
4. is found by the permit issuance authority, in connection with the issuance of an NPDES permit to the publicly owned treatment works receiving the waste, to have significant impact, either singly or in combination with other contributing industries, on that treatment works or upon the quality of effluent from that treatment works.

If the industry does not fall into any of the above cases, it does not need to pretreat its incompatible wastes.

These waste waters also contain large volumes of suspended solids which consist of suspended sand and gravel and may cause or contribute to sewer line obstruction if present in significant concentrations.

The following pretreatment limitations are recommended for asphalt concrete plants which discharge to publicly owned treatment systems and whose effluent may cause sewer line obstruction or damage:

	Suspended Solids kg/kkg or lb/1000 lb product
30 day average	0.10
Maximum daily	0.20

These pretreatment limitations are based upon the medium size plant with water use at 131 gal/1000 lb product.

Concentrations for the 30 day average and maximum daily limitations are 100 mg/liter and 200 mg/liter, respectively.

SECTION X
BEST AVAILABLE TECHNOLOGY ECONOMICALLY ACHIEVABLE

Introduction

The effluent limitations which must be achieved by July 1, 1983, are to specify the degree of effluent reduction attainable through the application of the best available technology economically achievable (BATEA). BATEA is not based on an average of the best performance within an industrial category, but is determined by: 1) identifying the very best control and treatment technology employed by a specific plant within the industrial subcategory; or 2) concluding that such technology is readily transferable from one industry process to another. Consideration was also given to:

1. The total cost of application of this control technology in relation to the effluent reduction to be achieved from such application.
2. Energy requirements.
3. Non-water quality environmental impact.
4. The size and age of equipment and facilities involved.
5. The process employed.
6. Process changes.
7. The engineering aspects of the application of this control.

BATEA also considers the availability of in-process controls as well as control or additional end-of-pipe treatment techniques. This control technology is the highest degree that has been achieved or has been demonstrated to be capable of being designed for plant scale operations up to and including "no discharge" of pollutants.

Although economic factors are considered in this development, the cost for this level of control is intended to be the top-of-the-line of current technology subject to limitations imposed by economic and engineering feasibility. However, this control technology may be characterized by some technical risk with respect to performance and certainty of costs. Therefore, this control technology may necessitate some industrially sponsored development work prior to its application.

Effluent Reduction Attainable Through the Application of Best Available Technology Economically Achievable

Based on information contained in Sections III through VIII of this document, a determination has been made that the degree of effluent reduction attainable through the application of BATEA for the four subcategories is as follows:

Asphalt Emulsion Plants

	Suspended Solids (kg/cu m)	Suspended Solids (lb/1,000 gal)	Oil & Grease (kg/cu m)	Oil & Grease (lb/1,000 gal)	pH (units)
30-day average	0.015	0.125	0.010	0.083	6.0-9.0
Maximum daily	0.023	0.188	0.015	0.125	6.0-9.0

The above figures are given in terms of volume of runoff produced by a 7.62 cm (3-in) rainfall on an average-size production area of 4 hectares (10 acres) during a 24-hour period--approximately 3,028 cubic meters (0.800 mgd).

Asphalt Concrete Plants

The limitation for this subcategory is that there will be no discharge to navigable waters.

Asphalt Roofing Plants

	Suspended Solids (kg/kkg)	Suspended Solids (lb/1,000 lb)	pH (units)
30-day average	0.019	0.019	6.0-9.0
Maximum daily	0.028	0.028	6.0-9.0

The above figures are given in weight per weight of product produced. The average size plant discharges 569 cu m/day (0.15 mgd) of wastewater, and has a daily production rate of 454 kkg (500 ton).

Linoleum and Printed Asphalt Felt Plants

	Suspended Solids (kg/kkg)	Suspended Solids (lb/1,000 lb)	pH (units)
30-day average	0.013	0.013	6.0-9.0
Maximum daily	0.019	0.019	6.0-9.0

The above figures are given in weight per weight of product produced. The average size plant discharges 23 cu m/day (0.006 mgd), of wastewater and has a daily production rate of 27 kkg (30 ton).

The limits required by the application of BATEA for the four subcategories can be reached by using the recommended treatment technology as stated in Section IX of this document plus employing either additional sedimentation facilities or increasing the capacities. There is no evidence that this control technology will result in any unusual air pollution or solid waste disposal problems, either in kind or magnitude.

The above control facilities are currently being employed by a number of plants in each subcategory throughout the United States as listed below.

State	No. of facilities: Asphalt Emulsions	No. of facilities: Asphalt Roofing
Alabama		1
California	1	3
Colorado	1	1
Georgia		2
Illinois		3
Indiana	1	1
Maryland	1	1
New Jersey		1
North Carolina		1
Ohio	1	2
Oklahoma	1	1
Oregon	1	1
Pennsylvania		1
Texas	1	6

There are 3,360 plants in the asphalt concrete subcategory that are also achieving this level.

SECTION XI

NEW SOURCE PERFORMANCE STANDARDS

Standards of Performance for New Sources

This level of technology is to be achieved by new sources of wastewaters. A "new source" is defined in the Act as "any source, the construction of which is commenced after the publication of proposed regulations prescribing a standard of performance"

In defining performance standards for new sources, consideration has been given to:

1. costs and energy requirements;
2. non-water quality environmental impact;
3. process changes including changes in raw material operating methods, and recovery of materials;
4. engineering aspects of application.

Based on the information contained in Sections III through VIII of this document and the considerations presented above, a determination has been made that the degree of effluent reduction attainable through application of the New Source Performance Standards are the same as those outlined in Section X of this document. A summary of these limits follows:

Asphalt Emulsion Plants

	Suspended Solids (kg/cu m)	Suspended Solids (lb/1,000 gal)	Oil & Grease (kg/cu m)	Oil & Grease (lb/1,000 gal)	pH (units)
30-day average	0.015	0.125	0.010	0.083	6.0-9.0
Maximum daily	0.023	0.188	0.015	0.125	6.0-9.0

The above figures are given in terms of volume of runoff produced by a 7.62 cm (3-in) rainfall on an average-size production area of 4 hectares (10 acres) during a 24-hour period--approximately 3,028 cu m (0.800 mgd).

Asphalt Concrete Plants

The requirement for this subcategory is no discharge of wastewaters to navigable waters.

Asphalt Roofing Plants

	Suspended Solids (kg/kkg)	Suspended Solids (lb/1,000 lb)	pH (units)
30-day average	0.019	0.019	6.0-9.0
Maximum daily	0.028	0.028	6.0-9.0

The above figures are given in weight per weight of product produced. The average-size plant discharges 569 cu m/day (0.15 mgd) of wastewater, and has an average daily production rate of 454 kkg (500 ton).

Linoleum and Printed Asphalt Felt Plants

	Suspended Solids (kg/kkg)	Suspended Solids (lb/1,000 lb)	pH (units)
30-day average	0.013	0.013	6.0-9.0
Maximum daily	0.019	0.019	6.0-9.0

The above figures are given in weight per weight of product produced. The average-size plant discharges 23 cu m/day (0.006 mgd) of wastewater, and has an average daily production rate of 27 kkg (30 ton).

As stated in Section X of this document, there is no evidence that the application of this standard will result in any unusual air pollution or solid waste disposal problems, either in kind or magnitude.

Pretreatment Standards for New Sources

The level of treatment required for the incompatible oils and greases, by each of the four subcategories which discharge into a municipal system is the same as that required of plants discharging directly into navigable waters as discussed in Section IX. These wastewaters may also contain suspended solids composed of sand and gravel

which may cause or contribute to sewer line obstructions. All major contributing industries shall pretreat their incompatible wastes to the specified limits; a major contributing industry was defined in Section IX. If the industry does not fall into any of these cases, it does not need to pretreat its incompatible wastes.

Waste waters from asphalt concrete plants contain large volumes of suspended solids which consist of suspended sand and gravel and may cause or contribute to sewer line obstruction if present in significant concentrations.

Pretreatment limitations for asphalt concrete plants which will discharge effluent in significant volumes as to cause possible sewer line obstruction to publicly owned treatment plants are the same as those recommended for existing sources:

	Suspended Solids kg/kkg or lb/1000 lb product
30 day average	0.10
Maximum daily	0.20

SECTION XII

ACKNOWLEDGMENTS

This report was prepared by the Environmental Protection Agency's Water Quality Engineering Branch of the National Field Investigations Center, Cincinnati, Ohio under the management of Mr. A. D. Sidio, Director. Mr. Wayne Mello, Project Engineer and Mr. Victor F. Jelen, Chief, Water Quality Engineering Branch made significant contributions to the preparation of this report.

Mr. John Nardella, Project Manager, Effluent Guidelines Division contributed to the overall coordination of this study and assisted in the preparation of the final report.

Mr. Allen Cywin, Director Effluent Guidelines Division, Mr. Ernst Hall, Deputy Director, Effluent Guidelines Division and Mr. Walter J. Hunt, Chief, Effluent Guidelines Development Branch, offered guidance and helpful suggestions.

Members of the Working Group/Steering Committee who coordinated the internal EPA review are as follows:

Mr. Walter J. Hunt, Effluent Guidelines Division
Mr. John A. Nardella, Effluent Guidelines Division
Mr. David G. Davis, Office of Planning and Evaluation
Mr. Courtney Riordan, Office of Enforcement and General Counsel
Mr. Wayne Mello, National Field Investigation Center
Mr. Victor F. Jelen, National Field Investigation Center
Mr. Leon Myers, Ada Laboratory, Office of Research and Development

Acknowledgment and appreciation is given to secretarial staff for their efforts in the preparation of this report:

Ms. Talmedge Dunkle, NFIC
Ms. Carolyn Stumf, NFIC
Ms. Ann Covert, NFIC
Ms. Nancy Zrubek, EGD
Ms. Alice Thompson, EGD
Ms. Kay Starr, EGD

Appreciation is extended to the National Asphalt Paving Association and the Asphalt Roofing Manufacturers

Association for the valuable assistance and cooperation given to this project.

Appreciation is extended to the following companies that participated in the study:

Aerodyne Inc.
Arctic Roofing Inc.
Armstrong Cork Company
Aqualogic Inc.
Bird and Son Inc.
Brewer Company
Carthage Mills Inc.
Celotex Corporation
Certain-teed Products Inc.
Chexron Asphalt Company
Congoleum Industries Inc.
Del-Val Asphalt Company
Lloyd A. Fry Roofing Company
Flintkote Company
G.A.F. Inc.
Hercules Inc.
Johns-Manville Corp.
Logan Long Company
Mannington Mills Inc.
National Floor Products, Inc.
Stroud Roofing Company
Trumbull Asphalt Company
Valley Asphalt Corp.
Wapora Inc.
Warren Brothers Company

SECTION XIII

References

1. Background information for proposed new source performance standard: Asphalt Concrete Plants, Vol. 1, Main text, EPA, Publication No. APTD-1352a.

2. Industry Profile, Annual Survey of Manufacturers 1970, Department of Commerce, Publication No. M70(AS)-10.

3. Value of Product Shipments, Annual Survey of Manufacturers 1971, Department of Commerce, Publication No. M71(AS)-2.

4. Asphalt and Tar Roofing and Siding Products Summary for 1972, Current Industrial Reports, Department of Commerce, Publication No. MA-29A(72)-1.

5. Kirk-Othmer, Encyclopedia of Chemical Technology, Second Edition, John Wiley and Sons, Inc., New York.

6. "Water Quality Criteria 1972," National Academy of Sciences and National Academy of Engineering for the Environmental Protection Agency, Washington, D.C. 1972 (U.S. Government Printing Office, Stock No. 5501-00520).

SECTION XIV

GLOSSARY

Act

The Federal Water Pollution Control Act Amendments of 1972.

Annual Operating Costs: Those annual costs attributed to the manufacture of a product or operation of equipment. They include capital costs, depreciation, operating and maintenance costs, and energy and power costs.

Asphalt

A dark-brown to black cementitious material, solid or semisolid in consistency, in which the predominating constituents are bitumens which occur in nature as such or are obtained as residue in petroleum refining.

Best Available Demonstrated Control Technology (BADCT)

Treatment required for new sources as defined by Section 306 of the Act. (See Section XI of this report).

Best Available Technology Economically Achievable

Treatment required by July 1, 1983, for industrial discharges to surface (BATEA) waters as defined by Section 301 (b) (2) (A) of the Act. (See Section X of this report).

Best Practicable Control Technology Currently Available (BPCTCA)

Treatment required by July 1, 1977, for industrial discharges to surface waters as defined by Section 301 (b) (1) (A) of the Act. (See Section IX of this report).

Bitumen

A mixture of hydrocarbons occurring both in the native state and as residue from petroleum distillation.

Calender

A machine equipped with rollers that smooth the linoleum mix into a smooth blanket or sheet.

Capital Cost

Financial charges which are computed as the costs of capital times the capital expenditures for pollution control. The cost of capital is based upon a weighted average of the separate costs of debt and equity.

Esters

An organic compound which upon saponification yields an acid fraction and an an alcohol fraction; in this report restricted to those compounds which yield glycerine as the alcohol fraction.

External Controls

Technology applied to raw waste streams to reduce pollutant level.

Festoons

Loops or curves of saturated felts, linoleums, or printed felts.

Flux

As used by the asphalt industries, the residue from refining.

Gland

A device utilizing a soft wear resistant material used to minimize leakage between a rotating shaft and the stationary portion of a vessel, such as a pump.

Impregnate

To saturate.

In-Plant Controls

Technology applied within the manufacturing process to reduce or eliminate pollutants in the raw wastewater.

Investment Costs

The capital expenditures required to bring the treatment or control technology into operation. These include the traditional expenditures, such as design, purchase of land and materials, site preparation, construction and installation, plus any additional expenses required to bring the technology into operation including expenditures to establish necessary solid waste disposal.

Lipophilic

A substance having a strong attraction for fats or other liquids.

Lithopone

A white pigment consisting of 28% zinc sulfide and 72% barium sulfate; used widely in paints.

New Source

Any building, structure, facility, or installation from which there is or may be a discharge of pollutants and whose construction is commenced after the publication of the proposed regulations.

Ocher

Any of various colored earthy powders consisting essentially of hydrated ferric oxides mixed with clay, sand, etc.

Operation and Maintenance

Costs required to operate and maintain pollution abatement equipment. They include labor, material, insurance, taxes, solid waste disposal, etc.

Oxidized

The process in which air is forced through a substance, such as asphalt or linseed oil.

Pretreatment

Treatment applied to waste water before it is discharged to a publicly-owned treatment works.

Poises

A unit of coefficient of viscosity, defined as the tangential force per unit area required to maintain unit difference in velocity between two parallel planes separated by 1 cm of fluid.

Resid

Another name for residual oil, a liquid or semiliquid product obtained as residue from the distillation of petroleum. It contains asphaltic hydrocarbons.

Rotogravure

A printing process using photogravure cylinders on a rotary press.

SIC

Standard Industrial Classification

Stoving

A curing process in which linoleum or printed felt floorings are hung in ovens.

Whiting

Finely ground, naturally occurring calcium carbonate ($CaCO_3$).

CONVERSION TABLE

MULTIPLY (ENGLISH UNITS)		by	TO OBTAIN (METRIC UNITS)	
ENGLISH UNIT	ABBREVIATION	CONVERSION	ABBREVIATION	METRIC UNIT
acre	ac	0.405	ha	hectares
acre - feet	ac ft	1233.5	cu m	cubic meters
British Thermal Unit	BTU	0.252	kg cal	kilogram - calories
British Thermal Unit/pound	BTU/lb	0.555	kg cal/kg	kilogram calories/kilogram
cubic feet/minute	cfm	0.028	cu m/min	cubic meters/minute
cubic feet/second	cfs	1.7	cu m/min	cubic meters/minute
cubic feet	cu ft	0.028	cu m	cubic meters
cubic feet	cu ft	28.32	l	liters
cubic inches	cu in	16.39	cu cm	cubic centimeters
degree Fahrenheit	°F	0.555(°F-32)*	°C	degree Centigrade
feet	ft	0.3048	m	meters
gallon	gal	3.785	l	liters
gallon/minute	gpm	0.0631	l/sec	liters/second
horsepower	hp	0.7457	kw	killowatts
inches	in	2.54	cm	centimeters
inches of mercury	in Hg	0.03342	atm	atmospheres
pounds	lb	0.454	kg	kilograms
million gallons/day	mgd	3,785	cu m/day	cubic meters/day
mile	mi	1.609	km	kilometer
pound/square inch (gauge)	psig	(0.06805 psig +1)*	atm	atmospheres (absolute)
square feet	sq ft	0.0929	sq m	square meters
square inches	sq in	6.452	sq cm	square centimeters
ton (short)	ton	0.907	kkg	metric ton (1000 kilograms
yard	yd	0.9144	m	meter

* Actual conversion, not a multiplier

☆ U.S. GOVERNMENT PRINTING OFFICE: 1975— 210-810/10