United States Environmental Protection Agency
Effluent Guidelines Division
WH-552
Washington DC 20460
EPA 440/1-82/024
May 1982
Water and Waste Management

EPA

Development Document for Effluent Limitations Guidelines and Standards for the

Final

Iron and Steel Manufacturing Point Source Category

Volume III

Steel Making Subcategory
Vacuum Degassing Subcategory
Continuous Casting Subcategory

202-260-7151
Fax: 202-260-7185
jett.george@epa.gov

George M. Jett
Chemical Engineer
U.S. Environmental Protection Agency
Engineering and Analysis Division (4303)
1200 Pennsylvania Avenue, NW
Washington, D.C. 20460

DEVELOPMENT DOCUMENT

for

EFFLUENT LIMITATIONS GUIDELINES

NEW SOURCE PERFORMANCE STANDARDS

and

PRETREATMENT STANDARDS

for the

IRON AND STEEL MANUFACTURING POINT SOURCE CATEGORY

Anne M. Gorsuch
Administrator

Steven Schatzow
Director
Office of Water Regulations and Standards

Jeffery Denit, Acting Director
Effluent Guidelines Division

Ernst P. Hall, P.E.
Chief, Metals & Machinery Branch

Edward L. Dulaney, P.E.
Senior Project Officer

May, 1982

Effluent Guidelines Division
Office of Water Regulations and Standards
U.S. Environmental Protection Agency
Washington, D.C. 20460

STEELMAKING SUBCATEGORY

TABLE OF CONTENTS

SECTION	SUBJECT	PAGE
I	PREFACE	1
II	CONCLUSIONS	3
III	INTRODUCTION	13
	General Discussion	13
	Data Collection Activities	14
	Description of the Steelmaking Process	14
IV	SUBCATEGORIZATION	61
	Introduction	61
	Factors Considered in Subdivision	62
V	WATER USE AND WASTEWATER CHARACTERIZATION	85
	Introduction	85
	Water Use	85
	Wastewater Characterization	86
VI	WASTEWATER POLLUTANTS	99
	Introduction	99
	Conventional Pollutants	99
	Nonconventional, Nontoxic Pollutants	99
	Toxic Pollutants	100
VII	CONTROL AND TREATMENT TECHNOLOGY	109
	Introduction	109
	Summary of Treatment Practices Currently Employed	109
	Control and Treatment Technologies for BAT, NSPS, PSES, and PSNS	110
	Summary of Monitoring Data	112
	Plant Visits	113
	Effect of Make-up Water Quality	118
VIII	COST, ENERGY, AND NON-WATER QUALITY IMPACTS	173
	Introduction	173
	Actual Costs Incurred by the Industry	173
	Control and Treatment Technologies	174
	Cost, Energy and Non-water Quality Impacts	175
	Summary of Impacts	181

STEELMAKING SUBCATEGORY

TABLE OF CONTENTS (Continued)

SECTION	SUBJECT	PAGE
IX	EFFLUENT QUALITY ATTAINABLE THROUGH THE APPLICATION OF THE BEST PRACTICABLE CONTROL TECHNOLOGY CURRENTLY AVAILABLE	223
	Identification of BPT	224
	Rationale for BPT	224
	Justification of BPT Effluent Limitations	226
X	EFFLUENT QUALITY ATTAINABLE THROUGH THE APPLICATION OF THE BEST AVAILABLE TECHNOLOGY ECONOMICALLY ACHIEVABLE	237
	Introduction	237
	Alternative Treatment Systems	237
	Treatment Technologies	238
	Flows	239
	Wastewater Quality	239
	Effluent Limitations for BAT Alternatives	240
	Selection of a BAT Alternative	241
	Justification of BAT Limitations	241
XI	BEST CONVENTIONAL POLLUTANT CONTROL TECHNOLOGY	247
XII	EFFLUENT QUALITY ATTAINABLE THROUGH THE APPLICATION OF NEW SOURCE PERFORMANCE STANDARDS	249
	Introduction	249
	Identification of NSPS	249
	Rationale for Selection of NSPS	250
	Selection of an NSPS Alternative	251
	Demonstration of NSPS	251
XIII	PRETREATMENT STANDARDS FOR DISCHARGES TO PUBLICLY OWNED TREATMENT WORKS	257
	Introduction	257
	General Pretreatment Standards	257
	Identification of Pretreatment Alternatives	257
	Selection of a Pretreatment Alternative	258

STEELMAKING SUBCATEGORY

TABLES

NUMBER	TITLE	PAGE
II-1	Water Pollution Control Cost Summary	7
II-2	BPT Model Flow, Model Effluent Quality and Effluent Limitations	9
II-3	Treatment Model Flows and Effluent Qualities	10
II-4	Effluent Limitations and Standards	11
III-1	Summary of Sampled Plants	25
III-2	Inventory of Basic Oxygen Furnaces	27
III-3	Inventory of Open Hearth Furnaces	29
III-4	Inventroy of Electric Arc Furnaces	30
III-5 to III-10	General Summary Tables	34
III-11 to III-16	Data Base Summary Tables	40
IV-1 to IV-3	Examples of Plants with Retrofitted Pollution Control Equipment	70
V-1 to V-3	Recycle Rate Tables	87
V-4 to V-12	Summaries of Analytical Data from Sampled Plants: Net Raw Concentration Tables	90
VI-1 to VI-3	Toxic Pollutants Known to be Present	102
VI-4 to VI-6	Selected Pollutants	105
VII-1	List of Control and Treatment Technology (C&TT) Components and Abbreviations	119
VII-2 to VII-12	Summaries of Analytical Data from Sampled Plants: Raw Wastewaters and Effluents	124
VII-13 to VII-16	Summaries of D-DCP Analytical Data	137

STEELMAKING SUBCATEGORY

TABLES (Continued)

NUMBER	TITLE	PAGE
VII-17 to VII-19	Raw Wastewater Characterization Tables	141
VII-20 to VII-25	Net Concentration and Load Analysis Tables	144
VIII-1 to VIII-6	Effluent Treatment Costs	182
VIII-7 to VIII-11	Control and Treatment Technologies	188
VIII-12	BPT/NSPS/PSES/PSNS Treatment Model Costs: Basic Oxygen Furnace, Semi-Wet	196
VIII-13	BPT Treatment Model Costs: Basic Oxygen Furnace, Wet-Suppressed Combustion	197
VIII-14	BPT Treatment Model Costs: Basic Oxygen Furnace, Wet-Open Combustion	198
VIII-15	BPT Treatment Model Costs: Open Hearth, Wet	199
VIII-16	BPT/NSPS/PSES/PSNS Treatment Model Costs: Electric Arc Furnace, Semi-Wet	200
VIII-17	BPT Treatment Model Costs: Electric Arc Furnace, Wet	201
VIII-18	BAT/PSES/PSNS Treatment Model Costs: Basic Oxygen Furnace, Wet-Suppressed Combustion	202
VIII-19	BAT/PSES/PSNS Treatment Model Costs: Basic Oxygen Furnace, Wet-Open Combustion	203
VIII-20	BAT/PSES Treatment Model Costs: Open Hearth Furnace, Wet	204
VIII-21	BAT/PSES/PSNS/NSPS Treatment Model	205

TABLES (Continued)

NUMBER	TITLE	PAGE
	Costs: Electric Arc Furnace, Wet	
VIII-22	NSPS Treatment Model Costs: Basic Oxygen Furnace, Wet-Suppressed Combustion	206
VIII-23	NSPS Treatment Model Costs: Basic Oxygen Furnace, Wet-Open Combustion	207
VIII-24	BAT Cost Summary	208
VIII-25	PSES Cost Summary	209
VIII-26	Solid Waste Generation Summary	210
VIII-27	Energy Requirements Due to Water Pollution Control	213
IX-1	BPT Model Treatment System Raw Wastewater Characteristics	227
IX-2	BPT Effluent Limitations Guidelines	228
IX-3 to IX-5	Summary of Flows Tables	229
IX-6 to IX-8	Justification of BPT Effluent Limitations Tables	232
X-1	Alternative BAT Effluent Limitations	242
X-2 to X-4	Justification of BAT Effluent Limitations	243
XII-1	Alternative NSPS	252
XII-2 and XII-3	Justification of NSPS	253
XIII-1	Alternative PSES and PSNS	260

STEELMAKING SUBCATEGORY

FIGURES

NUMBER	TITLE	PAGE
III-1 to III-14	Process Flow Diagrams	46
IV-1 to IV-6	Effluent Flow Versus Plant Size Plots	73
IV-7 to IV-12	Effluent Flow Versus Plant Age Plots	79
VII-1 to VII-23	Treatment System Diagrams of Sampled Plants	150
VIII-1 to VIII-6	Treatment Models	216
IX-1 and IX-2	BPT Treatment Models	235
X-1	BAT Treatment Models	246
XII-1	NSPS Treatment Models	255
XIII-1	Pretreatment Models	261

VACUUM DEGASSING SUBCATEGORY

TABLE OF CONTENTS

SECTION	SUBJECT	PAGE
I	PREFACE	263
II	CONCLUSIONS	265
III	INTRODUCTION	271
	General Discussion	271
	Data Collection Activities	271
	Description of Vacuum Degassing Operations	272
IV	SUBCATEGORIZATION	283
	Introduction	283
	Factors Considered in Subcategorization	283
V	WATER USE AND WASTEWATER CHARACTERIZATION	291
	Introduction	291
	Water Use	291
	Waste Characterization	292
VI	WASTEWATER POLLUTANTS	297
	Introduction	297
	Conventional Pollutants	297
	Toxic Pollutants	297
VII	CONTROL AND TREATMENT TECHNOLOGY	301
	Introduction	301
	Summary of Treatment Practices Currently Employed	301
	Control and Treatment Technologies for BAT, NSPS, PSNS, and PSES	302
	Summary of Analytical Data	302
	Plant Visits	303
	Effect of Make-up Water Quality	304
VIII	COST, ENERGY, AND NON-WATER QUALITY IMPACTS	321
	Introduction	321
	Actual Costs Incurred by the Plants Sampled or Solicited for this Study	321
	Recommended Control and Treatment Technologies	322
	Cost, Energy and Non-water Quality Impacts	322
	Summary of Impacts	327

VACUUM DEGASSING SUBCATEGORY

TABLE OF CONTENTS (Continued)

SECTION	SUBJECT	PAGE
IX	EFFLUENT QUALITY ATTAINABLE THROUGH THE APPLICATION OF THE BEST PRACTICABLE CONTROL TECHNOLOGY CURRENTLY AVAILABLE	335
	IdentificationofBPT	335
	Rationalefor BPT	336
X	EFFLUENT QUALITY ATTAINABLE THROUGH THE APPLICATION OF THE BEST AVAILABLE TECHNOLOGY ECONOMICALLY ACHIEVABLE	341
	Introduction	341
	Identification of BAT	341
	Rationale for the Selection of BAT Alternative	342
	Selection of a BAT Alternative	344
XI	BEST CONVENTIONAL POLLUTANT CONTROL TECHNOLOGY	349
XII	EFFLUENT QUALITY ATTAINABLE THROUGH THE APPLICATION OF NEW SOURCE PERFORMANCE STANDARDS	351
	Introduction	351
	NSPS Alternatives	351
	Rationale for Selection of NSPS	352
	Selection of an NSPS Alternative	353
XIII	PRETREATMENT STANDARDS FOR DISCHARGES TO PUBLICLY OWNED TREATMENT WORKS	357
	Introduction	357
	General Pretreatment Standards	357
	Alternative Pretreatment Systems	357
	Selection of a Pretreatment Alternative	358

VACUUM DEGASSING SUBCATEGORY

TABLES

NUMBER	TITLE	PAGE
II-1	BPT Treatment Model Flow and Effluent Quality	268
II-2	Treatment Model Flows, Effluent Quality and Effluent Limitations and Standards	269
III-1	Summary of Sampled Plants	275
III-2	General Summary Table	276
III-3	Data Base Summary Table	280
IV-1	Examples of Plants with Retrofitted Pollution Control Equipment	287
IV-2	Geographic Location of Subcategory Operations	288
V-1	Recycle Rates	294
V-2 and V-3	Summary of Analytical Data from Sampled Plants: Net Raw Concentration Tables	295
VI-1	Toxic Pollutants Known to be Present	299
VI-2	Selected Pollutants	300
VII-1	List of Control and Treatment Technology (C&TT) Components and Abbreviations	305
VII-2 and VII-3	Summaries of Analytical Data from Sampled Plants: Raw Wastewaters and Effluents	310
VII-4	Summary of D-DCP Analytical Data	312
VII-5	Raw Wastewater Characterization	313
VII-6	Net Concentration and Load Analysis	314
VIII-1	Effluent Treatment Costs	328
VIII-2	Model Control and Treatment Technology Summary	329
VIII-3	BPT Treatment Model Costs	331

VACUUM DEGASSING SUBCATEGORY

TABLES (Continued)

NUMBER	TITLE	PAGE
VIII-4	BAT/PSES/PSNS/NSPS Treatment Model Costs	332
IX-1	Justification of Treatment Model Effluent Flow	337
IX-2	Justification of BPT Limitations	338
X-1	BAT Effluent Limitations	346
X-2	Justification of BAT Limitations	347
XII-1	New Source Performance Standards	354
XII-2	Justification of NSPS	355
XIII-1	Pretreatment Effluent Standards (Existing and New Sources)	359

VACUUM DEGASSING SUBCATEGORY

FIGURES

NUMBER	TITLE	PAGE
III-1 and III-2	Process Flow Diagrams	281
IV-1 and IV-2	Discharge Flow Versus Size and Age Plots	289
VII-1 to VII-6	Treatment System Diagrams of Sampled Plants	315
VIII-1	Treatment Models	333
IX-1	BPT Treatment Model	339
X-1	BAT Treatment Model	348
XII	NSPS Treatment Model	356
XIII	Pretreatment Model	360

CONTINUOUS CASTING SUBCATEGORY

TABLE OF CONTENTS

SECTION	SUBJECT	PAGE
I	PREFACE	361
II	CONCLUSIONS	363
III	INTRODUCTION	369
	General Discussion	369
	Data Collection Activities	369
	Description of Continuous Casting Operations	370
	Description of Pressure Casting	371
IV	SUBCATEGORIZATION	387
	Introduction	387
	Factors Considered in Subdivision	387
V	WATER USE AND WASTEWATER CHARACTERIZATION	395
	Introduction	395
	Water Use	395
	Wastewater Characterization	396
VI	WASTEWATER POLLUTANTS	399
	Introduction	399
	Conventional Pollutants	399
	Toxic Pollutants	399
VII	CONTROL AND TREATMENT TECHNOLOGY	403
	Introduction	403
	Summary of Treatment Practices Currently Employed	403
	Control and Treatment Technologies Considered for Toxic Pollutant Removal	404
	Summary of Sampling Visit Data	405
	Effect of Make-up Water Quality	406
VIII	COST, ENERGY, AND NON-WATER QUALITY IMPACTS	425
	Introduction	425
	Actual Costs Incurred by Plants Sampled for this Study	425
	Recommended Control and Treatment Technologies	426
	Cost, Energy, and Non-Water Quality Impacts	427
	Summary of Impacts	431

CONTINUOUS CASTING SUBCATEGORY

TABLE OF CONTENTS

SECTION	SUBJECT	PAGE
IX	EFFLUENT QUALITY ATTAINABLE THROUGH THE APPLICATION OF THE BEST PRACTICABLE CONTROL TECHNOLOGY CURRENTLY AVAILABLE	441
	Introduction	441
	Identification of BPT	441
	Rationale for BPT Treatment System	442
	Justification of BPT	442
X	EFFLUENT QUALITY ATTAINABLE THROUGH THE APPLICATION OF THE BEST AVAILABLE TECHNOLOGY ECONOMICALLY ACHIEVABLE	447
	Introduction	447
	BAT Flow Rate	447
	Identification of BAT	447
	Rationale for the Selection of the BAT Alternatives	449
	Effluent Limitations for BAT Alternatives	451
	Selection of a BAT Alternative	451
	Demonstration of BAT Limitations	451
XI	BEST CONVENTIONAL POLLUTANT CONTROL TECHNOLOGY	455
XII	EFFLUENT QUALITY ATTAINABLE THROUGH THE APPLICATION OF NEW SOURCE PERFORMANCE STANDARDS	457
	Introduction	457
	Identification of NSPS	457
	Rationale for Selection of NSPS	458
	Model Flow Rates	458
	Selection of NSPS Alternative	458
	Demonstration of NSPS	459
XIII	PRETREATMENT STANDARDS FOR THE DISCHARGES TO PUBLICLY OWNED TREATMENT WORKS	463
	Introduction	463
	General Pretreatment Standards	463
	Alternative Pretreatment Systems	463
	Selection of a Pretreatment Alternative	463

CONTINUOUS CASTING SUBCATEGORY

TABLES

NUMBER	TITLE	PAGE
II-1	BPT Treatment Model Flow, Effluent Quality, and Effluent Limitations	366
II-2	Model Flow, Model Effluent Quality, and Effluent Limitations and Standards	367
III-1	Summary of Sampled Plants	373
III-2	General Summary Table	374
III-3	Data Base Summary Table	381
IV-1	Examples of Plants that have Demonstrated the Ability to Retrofit Pollution Control Equipment	391
IV-2	Applied and Discharge Flow Rates	392
V-1 and V-2	Summary of Analytical Data from Sampled Plants: Net Raw Concentrations	397
VI-1	Toxic Pollutants Known to be Present	401
VI-2	Selected Pollutants	402
VII-1	List of Control and Treatment Technology (C&TT) Components and Abbreviations	408
VII-2 to VII-3	Summaries of Analytical Data from Sampled Plants: Raw Wastewaters and Effluents	413
VII-4	Net Concentration and Load Analysis	416
VIII-1	Effluent Treatment Costs	432
VIII-2	Model Control and Treatment Technologies	434
VIII-3	BPT Treatment Model Costs	436
VIII-4	BAT/PSES Treatment Model Costs	437
VIII-5	NSPS/PSNS Treatment Model Costs	438
IX-1	BPT Effluent Load Justification	443
IX-2	Summary of Flows and Recycle Rates	444

CONTINUOUS CASTING SUBCATEGORY

TABLES (Continued)

NUMBER	TITLE	PAGE
X-1	BAT Effluent Limitations	452
X-2	Justification of BAT Effluent Limitations	453
XII-1	New Source Performance Standards	460
XII-2	Justification of NSPS	461
XIII-1	Pretreatment Effluent Standards for Existing Sources	465
XIII-2	Pretreatment Effluent Standards for New Sources	466

CONTINUOUS CASTING SUBCATEGORY

FIGURES

NUMBER	TITLE	PAGE
III-1 to III-4	Process Flow Diagrams	382
IV-1	Discharge Flow Versus Size and Age Plots	393
VII-1 to VII-7	Treatment System Diagrams of Sampled Plants	417
VIII-1	BPT/BAT/PSES Treatment Model	439
VIII-2	NSPS/PSNS Treatment Model	440
IX-1	BPT Treatment Model	445
X-1	BAT Treatment Model	454
XII-1	NSPS Treatment Model	462
XIII-1	PSES Treatment Model	467
XIII-2	PSNS Treatment Model	468

STEELMAKING SUBCATEGORY

SECTION I

PREFACE

The USEPA has promulgated effluent limitations and standards for the steel industry pursuant to Sections 301, 304, 306, 307, and 501 of the Clean Water Act. The regulation contains effluent limitations for best practicable control technology currently available (BPT) and best available technology economically achievable (BAT) as well as pretreatment standards for new and existing sources (PSNS and PSES) and new source performance standards (NSPS). Effluent limitations for best conventional pollutant control technology (BCT) have been promulgated for the semi-wet segments and reserved for future consideration for the wet segments of this subcategory.

This part of the Development Document highlights the technical aspects of EPA's study of the Steelmaking Subcategory of the Iron and Steel Industry. Volume I of the Development Document addresses general issues pertaining to the industry while other volumes contain specific subcategory reports.

STEELMAKING SUBCATEGORY

SECTION II

CONCLUSIONS

Based upon this current study, a review of previous studies, and comments received on the regulation proposed on January 7, 1981 (46 FR 1858) the Agency has reached the following conclusions.

1. Steelmaking operations are reviewed collectively in this report and include the following subdivisions and segments:

   Basic Oxygen Furnaces (BOF)
   - semi-wet
   - wet-suppressed combustion
   - wet-open combustion

   Open Hearth Furnaces (OH)
   - wet

   Electric Arc Furnaces (EAF)
   - semi-wet
   - wet

2. In the BOF subdivision, the Agency retained the semi-wet air pollution control segment and retained the division of the wet air pollution control segment to reflect differences between suppressed combustion and open combustion gas collection and cleaning systems. In the open hearth furnace subdivision the Agency has deleted the semi-wet air pollution control segment. In the electric arc furnace subdivision, the further division into semi-wet and wet segments has been retained. The factors considered in evaluating the steelmaking subcategory included the type of gas cleaning system, final product, raw materials, wastewater characteristics, wastewater treatability, size and age, geographic location, and process water usage.

3. The Agency has promulgated BPT effluent limitations for the BOF wet-suppressed combustion segment that are identical to the originally promulgated and proposed BPT limitations. The Agency has promulgated less stringent BPT limitations for the open combustion segment. The open combustion segment limitations are based upon a TSS concentration of 50 mg/l and a flow of 110 gal/ton. The model flow rate used to develop the proposed limitations was 65 gal/ton. The Agency has again promulgated a zero discharge limitation for the BOF semi-wet segment.

4. The Agency has promulgated BPT effluent limitations for the wet air pollution control segment of the open hearth furnace subdivision which are the same as the orginally promulgated and proposed limitations, and the same as those promulgated for the BOF wet-open combustion and the EAF wet segments.

5. The Agency has promulgated BPT effluent limitations for the EAF wet segment which are less stringent than those proposed. These limitations are based upon a TSS concentration of 50 mg/l and a flow of 110 gal/ton. The Agency has retained the zero discharge limitation for the EAF semi-wet segment.

6. The Agency has retained the zero discharge limitation for the BOF and EAF semi-wet segments at the BAT level. For the BOF wet-suppressed combustion segment, the Agency has promulgated the same BAT limitations for lead and slightly less stringent zinc limitations than those proposed. The Agency has promulgated BAT limitations for the BOF wet-open combustion, open hearth wet and EAF wet segments that are less stringent than those proposed.

7. The Agency has not promulgated BCT limitations for the wet steelmaking segments. This section of the regulation has been reserved for future consideration. In the semi-wet segments the Agency has promulgated BCT limitations which are identical to the BPT limitations, i.e., zero discharge.

8. Monitoring of process wastewaters from plants within each segment revealed significant concentrations of several toxic metal pollutants (cadmium, chromium, copper, lead, nickel, zinc, and others). The discharges of these toxic pollutants can be reduced by available economically achievable technology. A summary of the discharges from the steelmaking subcategory at the BPT, BAT and PSES levels of treatment are shown below:

	Direct Pollutant Discharges (Tons/Year)		
	Raw Waste	BPT	BAT
Flow (MGD)	252	18.9	18.9
TSS	1,121,727	1,119	637
Toxic Metals	20,887	116	30
Fluoride	16,895	1,131	565

	Indirect Pollutant Dischargers (Tons/year)	
	Raw Waste	PSES
Flow (MGD)	21.2	1.6
TSS	91,716	52.5
Toxic Metals	1,333	2.8
Fluoride	704	45.0

9. EPA estimates of the costs of compliance with the BPT, BAT and PSES limitations are presented in Table II-1 for facilities in place as of July 1, 1981. The Agency has determined that the effluent reduction benefits associated with compliance with the limitations and standards outweigh the costs of compliance. These costs are summarized below:

Costs for Direct Dischargers
(Millions of July 1, 1978 Dollars)

	Investment Costs		Annual Costs	
	In-Place	Required	In-Place	Required
BPT	108.8	3.2	24.6	0.6
BAT	2.6	8.2	0.4	1.2
PSES	11.7	0.0	2.7	0.0

The Agency has also determined that the effluent reduction benefits associated with compliance with new source standards (NSPS, PSNS) justify these costs.

10. Several responses from the industry indicate that the recycle components included in the Agency's model treatment systems are in use at steelmaking plants and present no significant problems pertaining to scaling, fouling, or plugging.

11. The Agency has promulgated zero discharge as the NSPS for the BOF semi-wet and EAF semi-wet segments. For the BOF wet-suppressed combustion, BOF wet-open combustion and EAF wet segments the Agency has promulgated NSPS that are less stringent than those originally proposed. These standards are more stringent than the BPT limitations for TSS and equal to the BAT limitations for lead and zinc. The Agency has reserved NSPS for the open hearth wet segment because it is likely that open hearth furnace steelmaking in the United States will continue to decline and the Agency does not believe that any new open hearth steelmaking operations will be constructed.

12. The Agency has promulgated pretreatment standards for toxic metal pollutants for new and existing sources (PSNS and PSES) discharging to POTWs. These standards are intended to minimize the impact of pollutants which would pass through POTWs and are equivalent to the corresponding NSPS and BAT limitations.

13. Although several toxic metal pollutants were identified in the raw wastewaters of each segment in each steelmaking subdivision, effluent limitations and standards for all of the toxic metal pollutants have not been promulgated. The Agency believes that control of the toxic metals found in steelmaking wastewaters will be achieved by controlling the discharges of lead and zinc.

14. With regard to the remand issues, the Agency concludes that:

    a. None of the technologies included in the model treatment systems result in significant consumptive uses of water. While high rate recycle is a component of the model treatment systems, cooling towers are not necessary to achieve those recycle rates and, therefore, evaporative losses are minimized.

b. Estimated treatment system costs are equally applicable whether the system is an initial fit or a retrofit. The ability to retrofit wastewater treatment systems is not affected by plant age. The comparison of costs reported for plants, either visited or surveyed by D-DCPs, with the Agency's estimated costs for these plants, demonstrates that the estimated costs for the steelmaking segments and subdivisions are sufficient to account for site-specific and retrofit costs.

c. Based upon a review of information and data submitted by the industry, the Agency relaxed the model treatment system flow rate used to develop the limitations for the BOF open combustion segment in the 1974 regulation (65 gal/ton) to 110 gal/ton for this regulation. The data gathered for this study demonstrated the achievability of this model treatment system flow rate.

d. Based upon data obtained as part of this study, the model BAT alternative treatment systems for the open hearth wet segment presented in this report differ substantially from the treatment model presented in the 1974 document. The suspended solids concentrations used to develop the effluent limitations are based upon extensive monitoring data which demonstrate that the limitations are achievable and the model treatment system flow rates are demonstrated in the industry.

15. Table II-2 presents the BPT treatment model flows, pollutant concentrations, and effluent limitations for the steelmaking subcategory. Tables II-3 and II-4 present the treatment model flows, pollutant concentrations, and the BAT effluent limitations and NSPS, PSES, and PSNS for the steelmaking subcategory.

TABLE II-1

WATER POLLUTION CONTROL COST SUMMARY
STEELMAKING SUBCATEGORY

(Costs[1] are expressed in millions of 7/1/78 dollars)

		BPT				BAT			
		Investment		Annual		Investment		Annual	
Subdivision	Segment	In-Place	Required	In-Place	Required	In-Place	Required	In-Place	Required
Basic Oxygen Furnace	Semi-Wet	2.70	1.61	0.41	0.24	NA	NA	NA	NA
	Wet-Suppressed Combustion	15.81	0.0	4.22	0.0	1.20	0.34	0.16	0.06
	Wet-Open Combustion	57.20	1.42	13.30	0.34	0.56	5.32	0.08	0.78
Open Hearth Furnace	Wet	17.78	0.0	3.75	0.0	0.33	1.44	0.05	0.23
Electric Arc Furnace	Semi-Wet	0.79	0.22	0.13	0.03	NA	NA	NA	NA
	Wet	14.48	0.0	2.82	0.0	0.46	1.09	0.06	0.17
TOTAL		108.76	3.25	24.63	0.61	2.55	8.19	0.35	1.24

TABLE II-1
WATER POLLUTION CONTROL COST SUMMARY
STEELMAKING SUBCATEGORY
PAGE 2

(Costs[1] are expressed in millions of 7/1/78 dollars)

		PSES			
		Investment		Annual	
Subdivision	Segment	In-Place	Required	In-Place	Required
Basic Oxygen Furnace	Semi-Wet	NA	NA	NA	NA
	Wet-Suppressed Combustion	3.06	0.0	0.82	0.0
	Wet-Open Combustion	5.73	0.0	1.30	0.0
Open Hearth Furnace	Wet	NA	NA	NA	NA
Electric Arc Furnace	Semi-Wet	NA	NA	NA	NA
	Wet	2.90	0.00	0.55	0.0
TOTAL		11.69	0.0	2.67	0.0

NA: Not applicable

Note: Costs for confidential plants are not included.

(1) Based upon facilities in-place as of 7/1/81

TABLE II-2

BPT MODEL FLOW, MODEL EFFLUENT QUALITY, AND EFFLUENT LIMITATIONS
STEELMAKING SUBCATEGORY

Subdivision	Segment	Pollutant	Model Effluent Quality: Daily Maximum Concentration (1)	Model Effluent Quality: 30-Day Average Concentration (1)	Effluent Limitations (2): Daily Maximum Limitations	Effluent Limitations (2): 30-Day Average Limitations
Basic Oxygen Furnace	Semi-Wet	Flow, gal/ton	0		(3)	
	Wet-Suppressed Combustion	Flow, gal/ton	50	50	NA	
		pH, Units	6.0 to 9.0		6.0 to 9.0	
		TSS	150	50	0.0312	0.0104
	Wet-Open Combustion	Flow, gal/ton	110		NA	
		pH, Units	6.0 to 9.0		6.0 to 9.0	
		TSS	150	50	0.0687	0.0229
Open Hearth Furnace	Wet	Flow, gal/ton	110		NA	
		pH, Units	6.0 to 9.0		6.0 to 9.0	
		TSS	150	50	0.0687	0.0229
Electric Arc Furnace	Semi-Wet	Flow, gal/ton	0		(3)	
	Wet	Flow, gal/ton	110		NA	
		pH, Units	6.0 to 9.0		6.0 to 9.0	
		TSS	150	50	0.0687	0.0229

NA: Not applicable

(1) Concentrations are expressed in mg/l unless otherwise noted.
(2) Kg/kkg of product
(3) No discharge of process wastewater pollutants to navigable waters.

TABLE II-3

TREATMENT MODEL FLOWS AND EFFLUENT QUALITIES
STEELMAKING SUBCATEGORY

Subdivision	Segment	Pollutant	BAT, NSPS, PSES, and PSNS Model Effluent Quality: Daily Maximum Concentration(1)	BAT, NSPS, PSES, and PSNS Model Effluent Quality: 30-Day Average Concentration(1)	BCT
Basic Oxygen Furnace	Semi-Wet	Flow, gal/ton	0		0
	Wet-Suppressed	Flow, gal/ton	50		(2)
	Combustion	pH, Units	6.0 to 9.0		
		TSS	70	25	
		122 Lead	0.9	0.3	
		128 Zinc	1.35	0.45	
	Wet-Open	Flow, gal/ton	110		(2)
	Combustion	pH, Units	6.0 to 9.0		
		TSS	70	25	
		122 Lead	0.9	0.3	
		128 Zinc	1.35	0.45	
Open Hearth Furnace	Wet	Flow, gal/ton	110(3)		(2)
		pH, Units	6.0 to 9.0		
		TSS	70	25	
		122 Lead	0.9	0.3	
		128 Zinc	1.35	0.45	
Electric Arc Furnace	Semi-Wet	Flow, gal/ton	0		0
	Wet	Flow, gal/ton	110		(2)
		pH, Units	6.0 to 9.0		
		TSS	70	25	
		122 Lead	0.9	0.3	
		128 Zinc	1.35	0.45	

NA: Not Applicable

(1) All concentrations are expressed in mg/l unless otherwise noted.
(2) BCT is reserved.
(3) NSPS and PSNS for open hearth furnace operations are reserved.

TABLE II-4

EFFLUENT LIMITATIONS AND STANDARDS
STEELMAKING SUBCATEGORY

Sub-Division	Segment	Pollutant	BAT Effluent Limitations(1) Daily Limitations	BAT Effluent Limitations(1) 30-Day Limitations	BCT Limitations(1)	NSPS(1) Daily Maximum Standards	NSPS(1) 30-Day Average Standards	PSES(1) Daily Maximum Standards	PSES(1) 30-Day Average Standards	PSNS(1) Daily Maximum Standards	PSNS(1) 30-Day Average Standards
Basic Oxygen Furnace	Semi-Wet	-	(2)	(2)	(2)	(2)	(2)	(2)	(2)	(2)	(2)
	Wet-Suppressed Combustion	pH, Units	NA	NA	(3)	6.0 to 9.0		NA	NA	NA	NA
		TSS	NA	NA		0.0146	0.00522	NA	NA	NA	NA
		122 Lead	0.000188	0.0000626		0.000188	0.0000626	0.000188	0.0000626	0.000188	0.0000626
		128 Zinc	0.000282	0.0000939		0.000282	0.0000939	0.000282	0.0000939	0.000282	0.0000939
	Wet-Open Combustion	pH, Units	NA	NA	(3)	6.0 to 9.0		NA	NA	NA	NA
		TSS	NA	NA		0.0321	0.0115	NA	NA	NA	NA
		122 Lead	0.000413	0.000138		0.000413	0.000138	0.000413	0.000138	0.000413	0.000138
		128 Zinc	0.000620	0.000207		0.000620	0.000207	0.000620	0.000207	0.000620	0.000207
Open Hearth Furnace	Wet	pH, Units	NA	NA	(3)	(3)	(3)	NA	NA	(3)	(3)
		TSS	NA	NA				NA	NA		
		122 Lead	0.000413	0.000138				0.000413	0.000138		
		128 Zinc	0.000620	0.000207				0.000620	0.000207		
Electric Arc Furnace	Semi-Wet	-	(2)	(2)	(2)	(2)	(2)	(2)	(2)	(2)	(2)
	Wet	pH, Units	NA	NA	(3)	6.0 to 9.0		NA	NA	NA	NA
		TSS	NA	NA		0.0321	0.0115	NA	NA	NA	NA
		122 Lead	0.000413	0.000138		0.000413	0.000138	0.000413	0.000138	0.000413	0.000138
		128 Zinc	0.000620	0.000207		0.000620	0.000207	0.000620	0.000207	0.000620	0.000207

NA: Not applicable

(1) Kg/kkg of product
(2) No discharge of process wastewater pollutants to navigable waters
(3) Reserved

STEELMAKING SUBCATEGORY

SECTION III

INTRODUCTION

General Discussion

Steel is an alloy of iron which contains less than 1.0% carbon. Steelmaking is basically a process in which carbon, silicon, phosphorus, manganese and other impurities present in the raw hot metal (molten iron) or steel scrap are oxidized to specific minimum levels. The molten steel is then either teemed into ingots or transferred to a continuous casting or pressure casting operation for direct conversion into a semi-finished product (i.e., slabs, blooms, or billets).

The basic raw materials for the steelmaking processes are hot metal or pig iron, steel scrap, limestone, burnt lime, dolomite, fluorspar, iron ores, and iron bearing materials such as pellets, mill scale, or BOF or open hearth waste solids. Steels of varying metallurgical specifications are produced by adding alloying agents either in the steelmaking furnace or to the teeming ladle after the molten steel is tapped from the furnace. The major steelmaking processes are Basic Oxygen Furnace (BOF), Open Hearth Furnace (OH), and Electric Arc Furnace (EAF). Figure III-1 illustrates the process sequences involved in steelmaking.

The large quantities of airborne gases, dusts, smoke, and iron oxide fumes generated in the steelmaking process are collected and cleaned by wet, semi-wet or dry gas cleaning systems. Wet and semi-wet gas cleaning systems generate contaminated wastewaters and sludges. These systems are the subject of this report. The following segments of the major steelmaking processes were selected to reflect differences in gas cleaning systems.

BOF (Basic Oxygen Furnace)

- Semi-Wet
- Wet - Suppressed Combustion
- Wet - Open Combustion

OH (Open Hearth Furnace)

- Wet

EAF (Electric Arc Furnace)

- Semi-Wet
- Wet

The semi-wet air pollution control systems use water to partially cool and condition the waste gases and fumes prior to final particulate removal in dry collectors (i.e., precipitators or baghouses). The application of excess water for partial cooling and conditioning results in an aqueous discharge from these gas cleaning systems. Zero discharge can be achieved in these systems by recycling excess applied water and limiting the make-up water volume to that added to the gases and that removed in the sludges removed from the process. Wet air pollution control systems use large volumes of water primarily to scrub the waste gases for particulate removal. As a result, wet gas cleaning systems discharge large volumes of wastewater. These wastewaters contain high loadings of suspended solids, toxic metals, and, depending upon the type of steelmaking operation, fluoride.

Data Collection Activities

To obtain process information and wastewater quality data, twenty-three steelmaking plants (twelve BOF plants, four OH plants, and seven EAF plants) were visited and sampled. The effluent limitations promulgated in 1974 were based primarily upon data obtained through field sampling at eleven steelmaking plants. During the recent toxic pollutant survey, twelve additional steelmaking plants were sampled and one of the EAF plants sampled during the original survey was resampled. Table III-1 provides a summary of those steelmaking plants sampled during these surveys.

The general methodology and approach for soliciting data from the industry is described in Volume I. Through the DCP (basic questionnaire) responses, information regarding production capacities, modes of operation, applied and discharge flow data, and treatment facilities in use was provided for two hundred steelmaking plants. Tables III-2 through III-4 provide an inventory of the plants in each segment. Tables III-5 through III-10 summarize the data collected for each steelmaking segment.

In order to obtain additional data for long-term effluent quality, treatment costs, and other information, the Agency sent D-DCPs (detailed data questionnaires) to selected steelmaking operations. Responses were received for fourteen steelmaking plants (seven BOF plants, three OH plants, and four EAF plants).

Tables III-11 through III-16 summarize the data used in this report.

Description of the Steelmaking Processes

A. Basic Oxygen Furnace Operations

The basic oxygen furnace steelmaking process was introduced in the early 1950's and has become an important factor in manufacturing steel products. Basic oxygen furnace (BOF) steelmaking involves the production of steel in pear-shaped, refractory lined, open mouth furnaces using a mixture of molten iron (2500°F), cold steel scrap, and fluxes. Fluxes, such as

burnt lime (CaO), produce a slag which collects the impurities and floats on the surface of the molten steel. Oxygen is injected into the furnace at supersonic velocities (Mach 2) through a water cooled, copper tipped steel lance for approximately twenty-five minutes. The lance is lowered through the furnace mouth and positioned about 60 inches above the surface of the bath. The high velocity of the oxygen causes violent agitation and intimate mixing with the molten iron resulting in the rapid oxidation of iron and dissolved carbon, silicon, manganese, and phosphorous.

The carbon in the steel bath combines with the oxygen to produce CO_2 and CO which are released from the furnace. Silicon, manganese, phosphorus, and other impurities oxidize into the slag. In order to maintain a fluid slag, fluorspar (CaF_2) is added to the bath at a rate of about 8 to 16 lbs per ton of steel. In addition, approximately 150 lbs of burnt lime is added per ton of steel to aid in slag production. Since the BOF steelmaking process is exothermic (heat generating), steel scrap can be melted without the use of external fuels. Generally, the furnace charge ratio is about 70% hot metal to 30% cold scrap.

The basic oxygen furnace is supported on trunnions mounted in bearings and is tilted for hot metal and scrap addition. The furnace is also tilted for the tapping (pouring) of steel into ladles and the dumping of slag into slag pots. The tap to tap time for BOF steelmaking is about 45 minutes, with generally half of the time used for blowing oxygen. Most BOF shops are equipped with two furnaces, but three furnace shops are found at some of the largest plants. In a dual furnace shop, one furnace is operated while the other is either being reheated or relined. Some BOF shops practice swing blowing in which one furnace is blown with oxygen, while the other furnace is charged with raw materials.

Several variations of the conventional Linz-Donowitz furnace are used by the United States steel industry. Two of the more significant variations are the Kaldo process and the Q-BOP furnace. The Kaldo process is basically the same as the conventional top blown process with the exception that the Kaldo furnace is mounted in an inclined position and rotated during oxygen blowing. The Q-BOP or bottom blown oxygen steelmaking process introduces pure oxygen along with carrier gases (natural gas, propane, nitrogen) and powdered fluxes (burnt lime) to the furnace through tuyeres located in the furnace bottom. The tuyeres are located in that half of the furnace bottom covered by molten steel so that when the furnace is in the tilted tapping position they are not exposed to wear. The furnace bottom is designed as a removable plug to allow for the easy replacement of the tuyeres. The addition of powdered fluxes through tuyeres prevents excessive slopping, and aids in the rapid formation of slag. Typical lime injection rates are on the order of five tons per minute. In this type of operation, oxygen is typically blown

for ten to fifteen minutes. The Q-BOP furnace waste gas BTU content is somewhat higher than that of a conventional BOF due to the natural gas and propane content of the carrier gases. Because these fuel gases are added to the process, greater cold scrap charges can be used. The carrier gases also aid in cooling the tuyeres, thus minimizing wear. There are presently three Q-BOP installations in the United States.

The waste products from the basic oxygen steelmaking process include heat, airborne fluxes, slag, carbon monoxide and dioxide, and oxides of iron (FeO, Fe_2O_3, Fe_3O_4) emitted as submicron dust. Also, when the hot metal (iron) is poured into ladles or the furnace, submicron iron oxide fumes are released and some of the carbon in the iron is precipitated as graphite, commonly called "kish." Fumes and smoke are also released when the steel is poured from the furnace into steel holding (teeming) ladles. Approximately 1% to 2% of the ingot steel production is released as dust. All of these contaminants become airborne and, thus, require removal. Basic oxygen furnaces are always equipped with air pollution control system for containing, cooling, and cleaning the huge volumes of hot gases and submicron fumes which are released in the process. Water is used to quench or cool the off-gases to temperatures at which they can be effectively treated by the gas cleaning equipment.

During the oxygen blowing cycle, the primary gas constituent emitted from the BOF furnace is carbon monoxide (CO). The carbon monoxide gas (CO) will burn outside of the BOF furnace if allowed to come into contact with air. If outside air is prevented from coming into contact with the CO gas, combustion is retarded. This is referred to as suppressed combustion. Because the CO gas will burn when in contact with air, precipitators cannot be used due to the potential for an explosion as a result of arcing in the electric plates. Due to the hazards of explosions, suppressed combustion systems always have wet scrubbers.

Most BOF gas cleaning systems in use today furnish excess air for the burning of the CO gases. An open hood mounted about 2 1/2 feet above the furnace mouth is provided for the burning and conveying of gases and fumes to the air pollution control system. The hoods are made in several different geometric configurations (round, square, octagonal) and are either water cooled or used as waste heat, steam generating boilers. For the suppressed combustion system, the hood is mounted directly on top of the furnace. A section of the hood is retractable to provide access to the furnace for charging and pouring. The retractable hood can be adjusted to assure proper hood evacuation. The CO gas is then cleaned and burned at a flare stack, although provisions can also be made to collect and store the CO gas for use as fuel.

The wet-open combustion gas cleaning systems are designed to accommodate gases and fumes from only one operating BOF. For a two furnace shop, the gas cleaning system is swung back and forth

to each furnace by means of motor operated valves in the off-take ductwork. For three furnace shops, two separate gas cleaning systems are generally provided. The wet-suppressed combustion gas cleaning systems are also designed to handle gases and fumes from only one operating BOF. However, in these systems, one gas cleaning system is provided for each furnace. The suppressed combustion gas cleaning systems are not swung back and forth, as with the open combustion systems, in order to prevent air leakage and possible explosion.

There are four principal types of gas cleaning systems currently used on BOFs: dry, semi-wet, wet-suppressed combustion, and wet-open combustion. The first BOF shops, installed during the late 1950s, were equipped with precipitators for gas cleaning. These systems were either of the dry or semi-wet type. From 1962 to 1970, the conventional open combustion, wet Venturi scrubber systems were installed. The present suppressed combustion systems were introduced in 1965 and have become the current wet gas cleaning technology. These gas cleaning systems are described below.

Two approaches are used for quenching or cooling furnace off-gases prior to particulate removal in electrostatic precipitators. One approach is based upon providing an exact balance between water applied and water evaporated. As no wastewaters or sludges are discharged, this system is defined as a dry precipitator system. This design uses an evaporation chamber to cool the hot gases. The evaporation chamber is two to three times larger than the spark box of the semi-wet gas cleaning systems and must be installed at the top of the BOF building. In the semi-wet systems, excess water is supplied to a spark box to cool the furnace gases, thus resulting in a process wastewater discharge. The spark box design has the advantage of reduced initial capital costs, however, additional capital expenditures for water pollution control equipment are required. The particulate matter collected in both precipitator systems is discharged as a dry dust.

Wet gas cleaning systems generally use quenchers and high energy Venturi scrubbers. The hot, particulate laden gases generated by the BOF process first pass through a primary quencher, where the gases are cooled with water and the heavier particles carried by the gas stream are removed. The gases are then conveyed to Venturi scrubbers for final cleaning. Water is applied in the scrubber to capture the particulates, and the resulting process wastewater is then pumped to the primary quencher. The quencher wastewater discharge is subsequently delivered to a wastewater treatment facility.

Both open and suppressed combustion gas cleaning systems have wet scrubber systems. The open combustion gas cleaning system requires a greater pressure drop across the scrubber throat than the suppressed combustion system because of the relative sizes of

the particulate matter carried by the gas stream. The particulate matter generated in a suppressed combustion system is larger and easier to remove from the gas stream and thus does not require a pressure drop as great as that of an open combustion system. The suppressed combustion system provides only incomplete combustion with the result that only larger sized particles are generated. On the other hand, open combustion systems allow for more complete combustion, due to the presence of excess air, with the result that smaller particles are generated. Because of the greater pressure drop required in the open combustion system's venturi, this system will consume more energy than a suppressed combustion system. Figures III-2 through III-8 illustrate the various gas cleaning systems employed at basic oxygen furnace operations.

B. Open Hearth Furnace Operations

The open hearth process is the oldest of the primary steelmaking processes still in use, having been introduced in the United States as early as 1868. The first commercial production of steel by this process began in 1888. The open hearth furnace became the primary method of making steel in the United States and reached its peak during the 1960s. Since that time, however, the use of open hearth furnaces has declined as a result of the development of the basic oxygen and electric arc furnaces.

The open hearth process produces steel in shallow, rectangular refractory basins, or hearths, enclosed by refractory lined walls and a roof. The furnace front wall is furnished with water cooled, lined doors through which raw materials are charged.. A plugged tap hole at the base of the wall opposite to the doors is provided to tap the finished molten steel into ladles. Open hearth furnaces can use an all scrap steel charge; however, a 50% hot metal/50% steel scrap charge is typically used.

Fuel, oil, coke oven gas, natural gas, pitch, creosote, or tar is burned at one end of the hearth to generate heat for the melting of scrap and the production of steel. The type of fuel used depends upon plant economics and the availability of fuel. The hot gases resulting from the refining process and from fuel combustion travel the length of the hearth above the raw material charge, and are then conducted downward through a flue to a regenerative brick chamber called "checkerwork" or "checkers." These brick masses absorb heat, thereby cooling the waste gases to approximately 750°C to 850°C. The combustion system burners, checkers, and flues are duplicated at each end of the furnace thus permitting frequent and systematic reversal of the flue gas and combustion air flows. A system of valves in the flues effects the gas reversal, so that heat stored in the checkers is used to preheat the incoming furnace combustion air. At some plants, the gases leaving the checkers are conveyed through waste heat boilers to further reduce the waste gas temperature to 260°C to 315°C.

There are two principal types of open hearth furnaces: acid and basic. Where the basin refractory material is composed of silica sand, the furnace is termed an "acid" furnace. A furnace whose basin is lined with dolomite or magnesite is termed a "basic" furnace. The basic open hearth process is generally used in the United States because of its capacity to remove phosphorus and sulfur from the furnace charge. The acid furnace on the other hand, tolerates only minimal amounts of these elements and can be charged with only selected raw materials. Open hearth furnaces are often grouped (10 to 12 furnaces) to form a shop with each furnace operating independently. One furnace in a shop is usually down (out of operation) for relining and other maintenance work. Steelmaking heats are scheduled in conjunction with down times in order to maintain the continuity of shop production.

The open hearth cycle is comprised of several stages, including fettling, charging, meltdown, hot metal addition, ore and lime boil, refining, tapping and delay. The period of time between tap and start, called "fettling," is spent in making repairs to the hearth and plugging the tap hole used in the previous heat. During the charging period, the solid raw materials such as pig iron, iron ore, limestone, and scrap iron and steel are dumped into the furnace by charging machines. The melting period begins when the first scrap has been charged. The direction of the gas flow is then reversed every 15 to 20 minutes. When the solid material has melted, a charge of hot metal is put into the furnace. This is normal procedure for a "hot-metal" furnace, but in the case of a "cold metal" furnace, solid materials are usually added in two batch charges. The hot metal addition is followed by the "ore boil" and then the "lime boil" (caused by oxidized gases rising to the surface of the molten metal). Carbon monoxide is generated as a result of the oxidation of carbon and is released during the "ore boil." When carbon dioxide is released in the calcination of the limestone, the resulting turbulence is called "lime boil." The refining period is used to lower the phosphorus and sulfur content of the steel to specified levels, to eliminate carbon, to allow time for proper conditioning of the slag and to attain proper bath temperature. At the end of the working period, the furnace is tapped, at which time the bath temperature is approximately 1,650°C. Typical tap to tap time for the production of steel in an open hearth furnace is normally eight to twelve hours. Most operating open hearth furnaces are equipped with oxygen lances to hasten the oxidation or refining cycle thereby reducing the tap to tap time to five to eight hours.

The waste products which result from the open hearth process are slag, oxides of iron released as submicron dust, waste gases (composed of air, carbon dioxide, and water vapor), oxides of sulfur and nitrogen (due to the nature of certain fuels being burned), and oxides of zinc (if galvanized steel scrap is used). Fluorides may be emitted from open hearth furnaces both as

gaseous and particulate matter. In most instances, the source of fluoride is fluorspar (CaF_2), which is used during the final stage of the heat. Iron oxide fumes or dust are generated at the rate of 25 lbs/ton of steel. Gas and dust generation is fairly constant throughout the heat cycle except during oxygen lancing, when the gas and dust generation rates are highest.

Most of the particulate emissions from open hearth furnaces are iron oxides (predominantly Fe_2O_3). Fume generation rates are dependent upon the type of scrap used (i.e., galvanized), and the oil and dirt content of the scrap. Tests performed on open hearth furnaces indicate that the peak fume generation rates occur at the end of charging for a cold metal furnace and just after scrap addition for a hot metal furnace. Fume generation rates during oxygen lancing are approximately three times greater than that of typical operations. Also, the blowing of the checkers increases the fume generation rate.

Open hearth furnaces are generally equipped with a gas cleaning system to cool and scrub the hot gases emitted from the refractory checker system. The hot gases are cooled to approximately 870°C by the refractory checkers and are further cooled to 280°C by the gas cleaning system. The particulate matter carried by the gas stream is removed by either dry precipitators or wet scrubbers. The gas cleaning systems may be manifolded designs which serve all the furnaces in a shop with one central gas cleaning system, or they can be independent systems which serve each furnace with a separate gas cleaning system.

Dry gas cleaning systems are either baghouses or electrostatic precipitators. A baghouse consists of a series of cloth or fiberglass bags which filter the cooled furnace gases. The furnace gases are first quenched by water sprays in a spray chamber and are then introduced to the baghouse. Depending upon the type of baghouse, the dust transported by the gas stream collects either on the inside or on the outside of the filter bag. The bags are periodically shaken to remove the dust which is then collected in hoppers located at the bottom of the baghouse structure. The dry dust thus collected is usually landfilled. The electrostatic precipitator uses electrically charged metal plates to capture the charged particulate matter carried by the gas stream. As in the baghouse method, the gases must be water cooled prior to precipitator cleaning. Cooling of the furnace gases is accomplished in an evaporation chamber. The dust captured by the electrostatic precipitator is collected in a hopper and conveyed to a landfill. Neither of these gas cleaning systems results in a process wastewater or sludge discharge and, therefore, these systems do not require any water pollution control equipment.

Wet gas cleaning systems generally have high energy Venturi scrubbers. The hot, particulate laden gases emanating from the

refractory checkers are conveyed to Venturi scrubbers for cooling and cleaning. Water is applied at the scrubber to capture the particulates and cool the gases. The resulting effluent wastewater is subsequently discharged to a wastewater treatment facility. One open hearth shop uses a unique type of scrubber referred to as a "hydroscrubber." In this system, steam is used as the driving force for evacuating the gases from the furnace and also to clean these gases. The steam is generated by a waste heat boiler located in the furnace shop.

Figures III-9 and III-10 illustrate the gas cleaning systems described above.

C. Electric Arc Furnace Operations

The electric arc steelmaking process was introduced in the United States as early as 1878 and has since become one of the three principal methods of raw steel production. Commercial production of steel by this method began in 1899 and has steadily increased. Until recently, electric arc furnaces (EAFs) had been used primarily for the production of alloy steels. However, EAFs are now used to produce a wide range of carbon and specialty steels.

The electric arc furnace steelmaking process produces high quality and alloy steels in refractory lined cylindrical furnaces using a cold steel scrap charge and fluxes. In some instances a portion of hot metal or a lower grade of steel, produced in the basic oxygen or open hearth furnace, will be charged to the electric furnace. This procedure is referred to as duplexing. The heat for melting the furnace charge, and fluxes, is furnished by passing an electric current (arcing) through the scrap or steel bath between three cylindrical carbon electrodes, arranged in a triangle, which are inserted through the furnace roof. The electrodes are consumable and oxidize at a rate of 10 to 16 lbs/ton of steel. Larger tonnage furnaces have hinged removable roofs for scrap addition while smaller furnaces receive the charge through furnace doors. Furnaces range in capacity from 18 to 365 kkg (20 to 400 ton) per heat and in size from 2 to 9 meters in diameter. The heat cycle time is generally four to five hours.

The production of some high quality steels requires the use of two slags for the same heat (referred to as oxidizing and reducing slags). After removing the first slag from the furnace, new fluxes are added to produce the second slag. While the reducing slag is being formed, a slight positive pressure (with respect to atmospheric pressure) must be maintained in the furnace to prevent the infiltration of air and further oxidation of the steel. The heat cycle generally consists of the charging, meltdown, oxidizing, refining and tapping (pouring) steps. Pure oxygen is sometimes lanced across the bath to hasten the oxidation cycle which in turn reduces electrical power consumption.

A new process for refining alloy and stainless steels, the "AOD" or Argon Oxygen Decarburization process, was introduced in the early 1970s and is used in conjunction with electric arc furnaces. The AOD furnace is similar in shape to a BOF vessel and generally handles a charge of 50 to 150 tons of hot steel. When the electric furnace is used in conjunction with AOD furnaces, the electric arc furnaces become carbon steel scrap melters. The hot metal charge is then transferred to the AOD process for final refining. This eliminates the double slag process necessary when electric arc furnaces are used to produce stainless and alloy steels. The AOD process allows for better control of alloy steel composition as well as greater use of alloying agents such as ferrous chromium.

In the AOD process, argon is injected through tuyeres in the AOD vessel bottom to refine the molten metal. Fluxes are added for the purpose of slag generation in the refining processes. The off-gases from the AOD vessel are conducted through hoods to baghouses where the particulates carried by the gas stream are removed. Hoods mounted above the AOD vessel mouth capture any fumes emitted. Generally, baghouse collectors are used as gas cleaning equipment, although at one plant, the off-gases are routed to the electric arc furnace wet fume scrubber system.

The waste products from the electric arc furnace process are smoke, slag, carbon monoxide and dioxide, and metal oxides (mainly iron) emitted as submicron fume. Other waste contaminants, such as zinc oxides from galvanized scrap, may be released depending upon the type and quality of scrap used. Oil bearing scrap will yield heavy reddish-black smoke as the oils are burned off at the start of the meltdown cycle. Nitrogen oxides and ozone are released during the arcing of the electrodes. Generally, 10 lbs of dust/ton of steel is expected, but as much as 30 lbs of dust/ton of steel may be released if inferior scrap is used. To exhaust the fumes produced in an electric arc furnace, one of five different methods is generally used. These methods are:

1. Plant rooftop or furnace building extraction
2. Local fume hoods
3. Water cooled roof elbow
4. Fourth hole extraction
5. Total furnace enclosed extraction or "snuff box."

The plant roof top or building extraction method entails the sealing of the shop building and the installation of exhaust hoods in roof trusses. Huge volumes of air are exhausted with this system (1,300,000 cubic feet per minute for a shop consisting of five 50-ton furnaces). This system is readily adaptable to existing electric arc furnace shops using the double slagging practice and it captures most of the fugitive emissions from the other furnace operations such as tapping or slagging. A baghouse collector is normally used to clean the exhaust gases in

this system. As these systems are designed to clean the fumes from an entire furnace shop, adequate quantities of cooling air are introduced to maintain proper temperatures. There is no wastewater discharge from this type of system.

The second type involves the use of local exhaust hoods fitted adjacent to door openings, electrode openings, and around junctures between the roof and the furnace shell. Fume, smoke, and gases are captured as they bleed through the furnace openings and enough cool air is drawn into the system so that the hot gases are tempered. A baghouse collector is also used with this system with the result that no process wastewaters are generated.

Water cooled roof elbows are generally tightly fitted to the furnace roofs and the hot gases are exhausted from the furnace interior through the cooled elbow. A combustion air space between the water cooled elbow and the gas cleaning ductwork provides combustion air for any carbon monoxide gases emitted from the furnace. As combustion results in high gas temperatures (approximately 1650°F), the gases must be water quenched or air cooled before entering the gas cleaning equipment. If spray chambers are used for quenching, a wastewater effluent is generated.

The fourth hole extraction method is similar to water cooled elbows, except another hole, in addition to the three holes for the electrodes, is located in the furnace roof. A space between the ductwork and the fourth hole allows for the combustion of the gases. The gases are withdrawn from the furnace by suction through the fourth hole.

Baghouse collectors, precipitators or scrubbers are used for both the water cooled elbows and fourth hole extraction systems. If precipitators are used, the hot off-gases from the furnaces must be cooled to about 280°C in order for the precipitators to function. Higher temperatures could damage the precipitator. If baghouse collectors are used, the off-gases must be cooled to 120°C as most bag fabrics cannot withstand higher temperatures. Only fiberglass bags can withstand higher temperatures (400°C), however, these bags are more fragile. Spray chambers are used in conjunction with baghouses to assure proper cooling of the gases. If high energy Venturi scrubbers are used, the gases are quenched to their saturation temperature in quenchers located near the furnace.

Some electric arc furnace shops have extensive exhaust ductwork which acts as a heat exchanger. The hot gases are thus cooled by radiation of heat through the bare ductwork. Some shops have similar cooling systems called hairpin cooling heat exchangers. This method is generally used for the lower gas volumes of smaller furnace shops. One electric furnace shop, Plant 0528A, uses a spark box coupled with gas washers and disintegrators for wet cleaning of the off-gases.

The fifth gas collection method, "snuff box," encloses the entire furnace and exhausts the fumes through ductwork. The charging of scrap, and other material is accomplished by overhead cranes passing through automatic sliding doors in the enclosure around the furnace. This system can be used with Venturi scrubbers, precipitators or baghouses. In comparison to rooftop extraction, smaller volumes of exhaust gases need to be treated. Also, this system exhausts most of the fume emitted from the entire electric arc furnace, including the fume emitted during tapping.

The removal of the particulate matter carried by the gas stream is accomplished in dry, semi-wet, and wet air cleaning systems. The dry and wet gas cleaning systems used for electric furnace operations are similar to those used for open hearth furnaces, while the semi-wet gas cleaning systems used for electric furnaces are similar to those used for BOF operations.

Figures III-11 through III-14 illustrate some of the variations of gas cleaning systems employed in electric arc furnace shops.

TABLE III-1

PLANTS SAMPLED

	Sample Code	Reference Code
Basic Oxygen Furnace		
Semi-Wet		
	R	0432A
	U	0396D
Wet-Suppressed Combustion	S	0060
	032	0384A
	034	0856N
	038	0684F
Wet-Open Combustion	T	0112A
	V	0584F
	031	0020B
	033	0856B
	035	0868A
	036	0112D
Open Hearth Furnace		
Wet		
	W	0112A
	X	0060
	042	0492A
	043	0864A
Electric Arc Furnace		
Semi-Wet		
	Y	0432C
	Z	0584A
	059B	0060F

TABLE III-1
PLANTS SAMPLED
PAGE 2

	Sample Code	Reference Code
Electric Arc Furnace		
Wet	AA(1)	0060F
	AB(2)	0868B
	051	0612
	052	0492A
	059A	0060F

(1) Plant AA was resampled during the toxic pollutant survey as Plant 059A. The data gathered during the toxic pollutant survey are considered more representative of recent plant operations and are therefore used in place of the original survey data.
(2) The D-DCP for Plant AB indicates that dry precipitators have been installed in place of wet scrubbers.

TABLE III-2

AN INVENTORY OF BASIC OXYGEN FURNACES

Reference Code	Sample Code	No. of Shops	No. of Furnaces
Dry			
0060B	-	1	2
0112	-	1	2
0256C	-	1	1
0320	-	1	2
0448A	-	1	3
0584A	-	2	4
0948C	-	1	2
		8	16
Semi-Wet			
0196A	-	**	**
0396D	U	1	2
0432A	R	1	4
0432C	-	1	2
0584C	-	1	2
0684B	-	1	2
0684G	-	1	2
0684I	-	1	2
0920B	-	1	2
0946A	-	1	2
		9 (1)	20 (1)
Wet-Suppressed Combustion			
0060	S	1	2
0384A	032	1	2
0528A	-	1	5
0684F	038	1	2
0684H	-	1	2
0856N	034	1	2
		6	15

TABLE III-2
AN INVENTORY OF BASIC
OXYGEN FURNACES
PAGE 2

Reference Code	Sample Code	No. of Shops	No. of Furnaces
Wet-Open Combustion			
0020B	031	1	2
0112A	T	1	2
0112B	-	1	3
0112D	036	1	2
0248A	-	1	2
0384A	-	1	2
0584F	V	1	2
0724A	-	1	3
0856B	033	1	2
0856R	-	1	2
0860B	-	2	6
0860H	-	1	3
0868A	035	1	2
0920N	-	1	2
		15	35

(1) Total does not include confidential listing

**: Confidential

TABLE III-3

AN INVENTORY OF OPEN HEARTH FURNACES

	Reference Code	Sample Code	No. of Shops	No. of Furnaces
Dry	0112B	-	1	8
	0112C	-	1	8(1)
	0256F	-	1	5
	0384A	-	1	7
	0432B	-	1	6
	0448A	-	1	8
	0544A	-	1	4
	0632	-	1	3(2)
	0684F	-	1	4
	0684F	-	1	4
	0856H	-	1	9
	0856H	-	1	*
	0856T	-	1	*
	0860B(3)	-	2	*
	0864C	-	1	4
	0948A(4)	-	1	12
	0948B(4)	-	1	11
Wet	0060	X	1	6
	0112A	W	1	7
	0492A	042	1	5
	0864A	043	1	10
	0948C(3)	-	*	*

(1) Two furnaces shut down.
(2) Only one furnace is in operation.
(3) Open hearth shop idle since 1975.
(4) Open hearth shop shut down in 1978. This plant merged with 0432.

- : Not applicable
* : Inadequate DCP response

TABLE III-4

AN INVENTORY OF
ELECTRIC ARC FURNACES

Reference Code	Plant Code	No. of Shops	No. of Furnaces
Semi-Wet			
0060F	059B	1	4
0432C	Y	1	2
0584A	Z	1	2
	TOTALS	3	8
Wet			
0060D	-	1	3
0060F	AA and 059A	1	2
0492A	052	1	2
0528A	-	1	3
0612	051	1	2(1)
0856F	-	1	5
0860H	-	2	2
0940	-	1	1
	TOTALS	9	20
Dry			
0020B	-	1	5
0020I	-	1	6
0020K	-	1	1
0032A	-	1	4
0040A	-	1	1
0044A	-	1	1
0060G	-	1	4
0060H	-	1	2
0060I	-	1	4
0060J	-	1	2
0060K	-	1	2
0068	-	1	2
0068B	-	1	1
0076	-	1	1
0080B	-	1	2
0084A	-	1	2
0088A	-	3	9
0112	-	1	5
0112E	-	2	2

TABLE III-4
AN INVENTORY OF ELECTRIC ARC FURNACES
PAGE 2

Reference Code	Plant Code	No. of Shops	No. of Furnaces
0112F	-	1	3
0112G	-	1	2
0116	-	1	2
0132	-	1	2
0136B	-	1	2
0144	-	1	1
0148	-	1	2
0148A	-	1	2
0156A	-	1	1
0156B	-	1	1
0168	-	1	1(2)
0176	-	2	5
0176A	-	1	2
0180	-	1	Unknown
0188A	-	1	3
0188B	-	1	3
0188C	-	1	2
0196A	-	1	1
0204	-	1	1
0216	-	1	2
0236A	-	1	3
0240A	-	1	8
0248B	-	1	5
0256C	-	1	2
0256K	-	2	4
0256N	-	2	3
0260	-	1	1
0288A	-	1	1
0296A	-	1	1
0316	-	1	3
0316A	-	1	2
0316B	-	1	2
0320	-	1	3
0340A	-	1	2
0356B	-	2	3
0360	-	1	1
0384A	-	1	2
388A	-	1	2
0396E	-	1	3
0404	-	1	3

TABLE III-4
AN INVENTORY OF ELECTRIC ARC FURNACES
PAGE 3

Reference Code	Plant Code	No. of Shops	No. of Furnaces
0424	-	1	3
0424A	-	1	2
0430C	-	1	4
0432J	-	1	5
0436	-	1	2
0440A	-	1	4
0444	-	1	1
0456A	-	1	3
0460A	-	1	2
0468B	-	1	3
0468F	-	1	2
0472A	-	IR	IR
0476A	-	1	2
0496	-	1	2
0504A	-	1	3
0508A	-	1	2
0508C	-	1	3
0520	-	1	2
0544A	-	1	1
0548D	-	1	1
0560	-	1	2
0576	-	1	2
0576A	-	1	2
0596	-	1	2
0608A	-	1	1
0616A	-	1	2
0620A	-	1	2
0620B	-	1	2
0620C	-	2	2
0624B	-	1	2
0628A	-	1	1
0640	-	1	2
0640E	-	1	1
0652	-	1	2
0672A	-	1	2
0672B	-	1	2
0684E	-	4	9
0684H	-	1	3
0684U	-	1	2
0696A	-	1	2

TABLE III-4
AN INVENTORY OF ELECTRIC ARC FURNACES
PAGE 4

Reference Code	Plant Code	No. of Shops	No. of Furnaces
0724A	-	1	2
0736	-	1	8
0740A	-	1	2
0764	-	1	2
0776E	-	1	1R
0776G	-	1	1
0780	-	2	3
0784	-	1	4
0796A	-	1	7
0796C	-	1	3(3)
0804A	-	1	6
0804B	-	1	1
0804B	-	IR	IR
0856R	-	1	5
0868B	AB(4)	1	2
0896	-	1	2
0900A	-	1	2
	TOTALS	127	290

(1) One AOD furnace
(2) Also 2 vacuum induction furnaces and 20 vacuum consumable electric furnaces. These furnaces are not included in the totals.
(3) Also 2 vaccum induction furnaces. These furnaces are also not included in the totals.
(4) Plant AB was sampled as a wet discharge plant in 1974. The plant has since been converted to a dry system.

- : Plant was not sampled, therefore, no plant code was assigned.
IR: Inadequate DCP response.

TABLE III-5

GENERAL SUMMARY TABLE
STEELMAKING SUBCATEGORY
BASIC OXYGEN FURNACE - SEMI-WET

Plant Code	# of Furnaces	Steelmaking Process	Furnace Age-1st Yr.Prod.	Type of Steel	Production (tons/day) Rated Capacity	Production (tons/day) 1976 Production	Flows (gallon/ton) Applied Flow	Flows (gallon/ton) Discharge Flow	Treatment Components Process Treatment	Treatment Components Central Treatment	Operating Mode	Discharge Mode
0196A	**	L-D	**	**	**	**	**	**	CL	None	OT	Direct
0396D	2	Interlake	1959	CS-100	2,400	2,451	132	13(1)	PSP,FLP,CL,VF	None	RTP 90.5 RET 9.5	Indirect
0432A	3	L-D	1968	CS-50,HSLA-40, Other-10	9,600	6,700	149	0	DR,FLP	None	RTP 100	Zero Discharge
0432C	2	L-D	1961	CS-87.2,HSLA-4.6,ES-8.2	6,585	6,271	32	11	PSP	VF,FLL,FL01, CL,PSP	OT	Indirect
0584C	2	Top blown	1968	CS-91.4,HSLA-6.4,ES-2.2	6,900	5,291	295	217	PSP	SS,SL, CLB,FDBS,02	OT	Direct
0684B	2	L-D	1965	CS-88,HSLA-6, ES-6	7,120	5,493	184	52	FLP,PSP	None	OT	Direct
0684G	2	L-D	1970	CS-81,AT-19	4,536	2,680	672	430	DR	Unknown	OT	Direct
0684I	2	L-D	1965	CS-85,HSLA-15	4,500	3,087	280	124	DR	Unknown	OT	Direct
0946A	2	L-D	1964	CS-87,HSLA-13	3,480	1,766	1,302	82	PSP,VF(FLP)	None	BD 6.3 RTP 93.7	POTW

(1) Blowdown used for dust control at slag processing operation.
**: Confidential data
(): Components enclosed in parentheses were installed after 1/1/78.

Steelmaking Process

L-D : Linz-Donowitz

Types of Steel

CS : Carbon Steel
AT : Alloy Tool Steel
ES : Electrical Steel
HSLA: High Strength Low Alloy

Additional Footnotes

IR : Inadequate company response
NA : Not applicable
FL01: Flocculation with ferric chloride
02 : Dechlorination with SO_2

NOTE: For a definition of C&TT codes, refer to Table VII-1.

TABLE III-6

GENERAL SUMMARY TABLE
STEELMAKING SUBCATEGORY
BASIC OXYGEN FURNACE - WET-SUPPRESSED COMBUSTION

Plant Code	# of Furnaces	Steelmaking Process	Furnace Age - 1st Year of Production	Type of Steel	Production (tons/day) Rated Capacity	Production (tons/day) 1976 Production	Flows (gallon/ton) Applied Flow	Flows (gallon/ton) Discharge Flow	Treatment Components Process Treatment	Treatment Components Central Treatment	Operating Mode	Discharge Mode
0060	2	OG	1969	CS-95,HSLA-5	7599	5795	1897	75	Classifier, FLP,CL,VF,(NA)	None	RTP 96.0 BD 4.0	Direct
0384A	2	Minimum Combustion	1974	CS-90,HSLA-9, ES-1	6000	5424	[1327]	[80]	Classifier,T,CL, (FLP),(VF),(NA)	None	RTP 94.0 BD 6.0	Direct
0528A	5	L-D	1955	CS-90,HSLA-10	6000	5502	1818	1818	Settling Basins	PSP,CL,T, CY,(FLP), (NA)	(RTP)	Direct
0684F	2	L-D	1966	CS-96,HSLA-4	9800	7840	[569]	[33]	DR	FLP,T,SS, NA,VF,NL, FLL,FLP, FLO1,CL	RTP 94.2 BD 5.8	Direct
0684H	2	Q-BOP	1977	CS-98.3, Other-1.7	7168	6380(1)	[1129]	[113]	FLP,TP,T,CT,VF	None	RTP 90.0 BD 10.0	POTW
0856N	2	L-D	1971	CS-90,HSLA-10	7700	7100	[1278]	[39]	CL,FLP,T,(VF), (NA)	None	RTP 96.9 BD 3.1	Direct

(1) New shop which was not operational in 1976. Tonnage figure is therefore average production.
[]: Data enclosed in brackets was provided in D-DCP responses or obtained during sampling visits.
(): Components enclosed in parentheses were installed after 1/1/78.

Steelmaking Process

OG : Off Gas
L-D : Linz-Donowitz

Types of Steel

CS : Carbon Steel
ES : Electrical Steel
HSLA: High strength low alloy

Additional Footnotes

FLO1: Flocculation with ferric chloride

NOTE: For a definition of other C&TT Codes, refer to Table VII-1.

TABLE III-7

GENERAL SUMMARY TABLE
STEELMAKING SUBCATEGORY
BASIC OXYGEN FURNACE - WET-OPEN COMBUSTION

Plant Code	# of Furnaces	Steelmaking Process	Furnace Age - 1st Year of Production	Type of Steel	Production (tons/day) Rated Capacity	Production (tons/day) 1976 Production	Flows (gallon/ton) Applied Flow	Flows (gallon/ton) Discharge Flow	Treatment Components Process Treatment	Treatment Components Central Treatment	Operating Mode	Discharge Mode
0020B	2	**	**	**	**	**	**	**	None	CL,FLL, FLP,VF	RUP 71.9 BD 28.1	Direct
0112A	2	L-D	1966	CS-100	9,167	8,903	1,315	437	FLP,T,(VF)	None	RTP 66.8 BD 33.2	Direct
0112B	3	L-D	1964	CS-85,HSLA-15	14,400	9,397	1,824	1,801	T,CL,VF	None	OT	Direct
0112D	2	L-D	1969	CS-66,HSLA-34	12,050	10,520	[454]	[244]	Classifiers, FLP,T,CY	NL,NW,NA, FLP,CL,SS, T,SL	RTP 46.3 BD 53.7	Direct
0248A	2	TOC	1968	CS-90,AT-10	2,400	2,085	2,072	1,934	NA	T,VF,FLP	(RTP)	Direct
0384A	2	L-D	1966	CS-94,HSLA-5, ES-1	11,200	10,175	977	99	T,(FLP),(VF), (NA)	None	RTP 89.1 BD 10.1	Direct
0584F	2	BOP	1967	CS-100	11,690	9,892	[262]	[65]	CL,FLP,VF,(NA)	SL	RTP 75.2 BD 24.8	Direct
0724A	2 1	KALDO L-D	1962 1974	CS-100	3,500	2,310	[1,558]	[312]	CL,FLP,VF,(NA)	None	RTP 80.0 BD 20.0	Direct
0856B	2	Suspended Combustion	1972	CS-100	7,750	7,283	[241]	[241]	Classifier, CY,VF,(FLP),(NA)	None	(RTP)	Direct
0856R	2	L-D	1963	CS-77,AS-10 HSLA-9,ES-4	7,500	6,109	1,296	118	T,VF,(FLP),(NA)	None	RUP 90.9 BD 9.1	Direct
0860B	3	BOP	1965	CS-94.7,AS-4.5,HSLA-0.8	12,400	10,762	1,285	201	SCR,CL,SL,SS, CY,VF,(FLP),(NA)	SL(Unk),SS	RTP 84.4 BD 15.6	Direct
0860B	3	Q-BOP	1973	CS-91,AS-6.1 HSLA-2.9	15,000	11,875	[1,263]	[146]	SCR,CL,SL,SS, VF,CT	SL(Unk),SS	RTP 88.4 BD 11.6	Direct
0860H	3	L-D	1969	CS-84.8,HSLA+ AT+ES-15.2	11,200	7,091	1,946	1,596	DR,T,VF, FLP,NA,CY	CL,CT	RUP 18.0 RET 82.0	Indirect
0868A	2	Q-BOP	1974	CS-100	7,440	6,198	[1,046]	[113]	FLP,CL,VF,(NA)	SL	RTP 89.2 BD 10.8	Direct
0920N	2	L-D	1965	CS-100	8,550	7,707	227	149	Classifier, T,VF,(FLP),(NA)	None	RTP 34.4 BD 65.6	Direct

** : Confidential data
[ ] : Data enclosed in brackets was provided in D-DCP responses or obtained during sampling visits.
( ) : Components enclosed in parentheses were installed after 1/1/78.

Steelmaking Process

L-D : Linz-Donowitz
TOC : Top blown oxygen converter

Types of Steel

CS : Carbon steel
AS : Alloy steel
AT : Alloy tool steel
ES : Electrical steel
HSLA: High strength low alloy

Note: For a definition of C&TT Codes, refer to Table VII-1.

TABLE III-8

GENERAL SUMMARY TABLE
STEELMAKING SUBCATEGORY
OPEN HEARTH FURNACE

Plant Code	# of Furnaces Total	# of Furnaces Recently Active	Type of Furnace	Furnace Age-1st Yr.Prod.	Type of Steel	Prod. (tons/day) Rated Capacity	Prod. (tons/day) 1976 Prod.	Flows (gal/ton) Applied Flow	Flows (gal/ton) Discharge Flow	Treatment Components Process Treatment	Treatment Components Central Treatment	Operating Mode	Discharge Mode
0060	6	6	OI & Basic	1952	CS-95, HSLA-5	5,507	2754	[4392]	[105]	CL,NC,VF, FLP,NL,CL	None	RTP 97.6 BD 2.4	Direct
0112A	7	7	OI & Basic	4 FCES-1957 3 FCES-1958	CS-100	10,822	6304	[914]	[114]	T,FLP, (NL),(VF)	None	RUP & RTP 87.5 BD 12.5	Direct
0492A	5	2-5	OI & Basic	1953	CS-97, HSLA-3	3,835	3048	[506]	[359]	FLP,NL,CL, VF	SL	(RTP)	Direct
0864A	10	6-7	OI	1944	CS-90.2, HSLA-9.8	6,550	5867	[1117]	[69]	T,CL,FLL, FLP,(VF)	SL	RTP 93.8 BD 6.2	Direct
0948C(1)	8	4	OI & Basic	6 FCES-1952 2 FCES-1953	CS-97, HSLA-3	7,600	3225(2)	2679	80	Classi-fier,T, Scr,SL,CT	None	RTP 97.0 BD 3.0	Direct

(1) Merged with 0432. Open Hearth shop idle since 1975.
(2) 1975 production
[]: Data enclosed in brackets was provided in D-DCP responses or obtained during sampling visits.
(): Components enclosed in parentheses were installed after 1/1/78.

Type of Furnace

OI : Oxygen Injection

Types of Steel

CS : Carbon Steel
HSLA: High Strength Low Alloy

NOTE: For a definition of C&TT codes, refer to Table VII-1.

TABLE III-9

GENERAL SUMMARY TABLE
STEELMAKING SUBCATEGORY
ELECTRIC ARC FURNACE - SEMI-WET

Plant Code	No. of Furnaces	Furnace Age 1st Yr.Prod.	Type of Steel	Production (tons/day) Rated Capacity	Production (tons/day) 1976 Production	Flows (gallons/ton) Applied Flow	Flows (gallons/ton) Discharge Flow	Treatment Components Process Treatment	Treatment Components Central Treatment	Operating Mode	Discharge Mode
0060F	4	1966	CS-85,HSLA-15	3900	2081	[23.7]	[20.6]	CL,VF, (FLP)	SL	(RTP)	Direct
0432C	2	1959	CS-89.5,HSLA-10.5	2280	2118	272	272	PSP	PSP,CL,FLP, FLL,FLO1,VF	(RTP)	Indirect(1)
0584A(2)	2	1968	CS-85,HSLA-15	(3)	1903	IR	0	N/A	N/A	N/A	Zero Discharge

(1) Effluent is reused in the slabbing mill, treated in a central treatment facility and discharged.
(2) The DCP lists this system as dry and provides only limited information. The plant, however, has a semi-wet system and maintains a balance between water applied and water evaporated. The only discharge from this system is a wet sludge from the spark box.
(3) The DCP reports that capacity is dependent upon charge material, power, O_2 rates, etc.
[]: Data enclosed in brackets was obtained during a sampling visit.
(): Components enclosed in parentheses were installed after 1/1/78.
IR: Inadequate response.

Types of Steel

CS : Carbon Steel
HSLA: High Strength Low Alloy

Additional Footnotes

N/A : Not Applicable
FLO1: Flocculation with ferric chloride

NOTE: For a definition of C&TT codes, refer to Table VII-1.

TABLE III-10

GENERAL SUMMARY TABLE
STEELMAKING SUBCATEGORY
ELECTRIC ARC FURNACE - WET

Plant Code	No. of Furnaces	Furnace Age- 1st Yr.Prod.	Type of Steel	Production (tons/day) Rated Capacity	Production (tons/day) 1976 Production	Flows (gallons/ton) Applied Flow	Flows (gallons/ton) Discharge Flow	Treatment Components Process Treatment	Treatment Components Central Treatment	Operating Mode	Discharge Mode
0060D	3	1969	ES-63,CS-15, HSLA-12,SS-10	2500	2520	[829]	[232]	CR,Classi-fier,CL,VF, (FLP)	None	RTP 72.0 BD 28.0	Direct
0060F	2	1951	CS-50.6,HSLA-49.4	1100	949	[2300]	[238]	Classifier, CL,VF	None	RUP&RTP 89.7 BD&RET 10.3	Direct
0492A(1)	2	1976	-	900	525	[1178]	[836]	None	NL,FLP,CL, VF	RTP 29.0 RET 71.0	Zero(2) Discharge
0528A	2	1949	CS-66,SS-34	1150	410	3512	3512	PSP	CL,T,CY, NA,FLP,VF	OT	Direct
0612	3	1968 1971,1976	CS-100	5500	3068	[2412]	[45]	CL,VF	None	RTP & RUP 98.1 RET 1.9	Zero(2) Discharge
0856F	2	1972	CS-100	1600	535(3)	2092(3)	104(3)	SL	None	RTP 95.0 BD 5.0	Direct
0860H(4)	2	1975	SS-88.6,CS-10.9, HSLA,AT,ES-0.5	463	544	2353	776	Classifier, T,VF	CL,CT	RUP 67.0 RET 33.0	Zero(2) Discharge
0860H	2	1971	CS-86.9,HSLA,AT, ES-13.1	1985	1914	2330	1212	Classifier, T,VF	CL,CT	RUP 48.0 RET 52.0	Zero(2) Discharge
0868B(5)	2	1971	CS-78.5,HSLA21.5	1560	1536	[2625]	[234]	Classifier, T,CY,SL	None	RTP 91.1 BD 8.9	Direct

(1) New shop, no DCP was submitted. The data presented for this plant represent information obtained during the sampling visit.
(2) Process water is reused throughout the plant.
(3) In comparison to reported typical production, the 1976 production was considered to be atypical. Therefore flow determinations were calculated on the basis of 1975 production values. The tonnage shown represents 1976 production.
(4) An A.O.D. furnace is coupled with this furnace system.
(5) The D-DCP reported that this plant converted to a dry system in 1977.
[ ]: Data enclosed in brackets was provided in D-DCP responses or obtained during sampling visits.
( ): Components enclosed in parentheses were installed after 1/1/78.

Types of Steel

CS : Carbon steel
AT : Alloy tool steel
ES : Electrical steel
HSLA: High strength low alloy
SS : Stainless steel

NOTE: For a definintion of C&TT codes, refer to Table VII-1.

TABLE III-11

STEELMAKING SUBCATEGORY DATA BASE
BASIC OXYGEN FURNACE - SEMI-WET

	No. of Plants	% of Total No. of Plants	Daily Capacity of Plants (Tons)	% of Total Daily Capacity
Plants sampled for original study	2	20	12,000	24.0
Plants sampled for toxic pollutant study	0	0	0	0
Total plants sampled	2	20	12,000	24.0
Plants responding via D-DCP	0	0	0	0
Plants sampled and/or responding via D-DCP	2	20	12,000	24.0
Plants responding to DCP	10	100	49,921(1)	100

(1) Does not include confidential production data for one plant.

TABLE III-12

STEELMAKING SUBCATEGORY DATA BASE
BASIC OXYGEN FURNACE - WET-SUPPRESSED COMBUSTION

	No. of Plants	% of Total No. of Plants	Daily Capacity of Plants (Tons)	% of Total Daily Capacity
Plants sampled for original study	1	16.7	7,599	17.2
Plants sampled for toxic pollutant study	3	50	23,500	53.1
Total plants sampled	4	66.7	31,099	70.3
Plants responding via D-DCP	3 incl. 2 above	50 incl. 33.3 above	20,868 incl. 13,700 above	47.1 incl. 30.9 above
Plants sampled and/or responding via D-DCP	5	83.3	32,267	86.4
Plants responding to DCP	6	100.0	44,267	100.0

TABLE III-13

STEELMAKING SUBCATEGORY DATA BASE
BASIC OXYGEN FURNACE - WET-OPEN COMBUSTION

	No. of Plants	% of Total No. of Plants	Daily Capacity of Plants (Tons)	% of Total Daily Capacity
Plants sampled for original study	2	14.3	20,857	15.5
Plants sampled for toxic pollutant study	4	28.6	27,240(1)	20.3
Total plants sampled	6	42.9	48,097(1)	35.8
Plants responding via D-DCP	4 incl. 2 above	28.6 incl. 14.3 above	30,190(1) incl. 11,690(1) above	22.5 incl. 8.7 above
Plants sampled and/or responding via D-DCP	8	57.1	66,597(1)	49.6
Plants responding to DCP	14	100.0	134,247(1)	100.0

(1) Does not include confidential production data for one plant.

TABLE III-14

STEELMAKING SUBCATEGORY DATA BASE
OPEN HEARTH FURNACE - WET

	No. of Plants	% of Total No. of Plants	Daily Capacity of Plants (Tons)	% of Total Daily Capacity
Plants sampled for original study	2	50.0	16,329	61.1
Plants sampled for toxic pollutant study	2	50.0	10,385	38.9
Total plants sampled	4	100.0	26,714	100
Plants responding via D-DCP	3 incl. 3 above	66.7 incl. 66.7 above	22,879 incl. 22,879 above	85.6 incl. 85.6 above
Plants sampled and/or responding via D-DCP	4	100.0	26,714	100.0
Plants responding to DCP	4	100.0	26,714	100.0

TABLE III-15

STEELMAKING SUBCATEGORY DATA BASE
ELECTRIC ARC FURNACE - SEMI-WET

	No. of Plants	% of Total No. of Plants	Daily Capacity of Plants (Tons)	% of Total Daily Capacity
Plants sampled for original study	2	66.7	4183	51.8
Plants sampled for toxic pollutant study	1	33.3	3900	48.2
Total plants sampled	3	100.0	8083	100.0
Plants responding via D-DCP	0	0.0	0.0	0.0
Plants sampled and/or responding via D-DCP	3	100.0	8083	100.0
Plants responding to DCP	3	100.0	8083	100.0

TABLE III-16

STEELMAKING SUBCATEGORY DATA BASE
ELECTRIC ARC FURNACE - WET

	No. of Plants	% of Total No. of Plants	Daily Capacity of Plants (Tons)	% of Total Daily Capacity
Plants sampled for original study	2	20.0	2660	15.7
Plants sampled for toxic pollutant study	3 incl. 1 above	30.0 incl. 10.0 above	7500 incl. 1100 above	44.3 incl. 6.5 above
Total plants sampled	4	40.0	9060	53.5
Plants responding via D-DCP	3 incl. 2 above	40.0 incl. 20.0 above	9560 incl. 7060 above	56.5 incl. 41.7 above
Plants sampled and/or responding via D-DCP	5	60.0	11,560	68.3
Plants responding to DCP	9	100.0	16,933	100.0

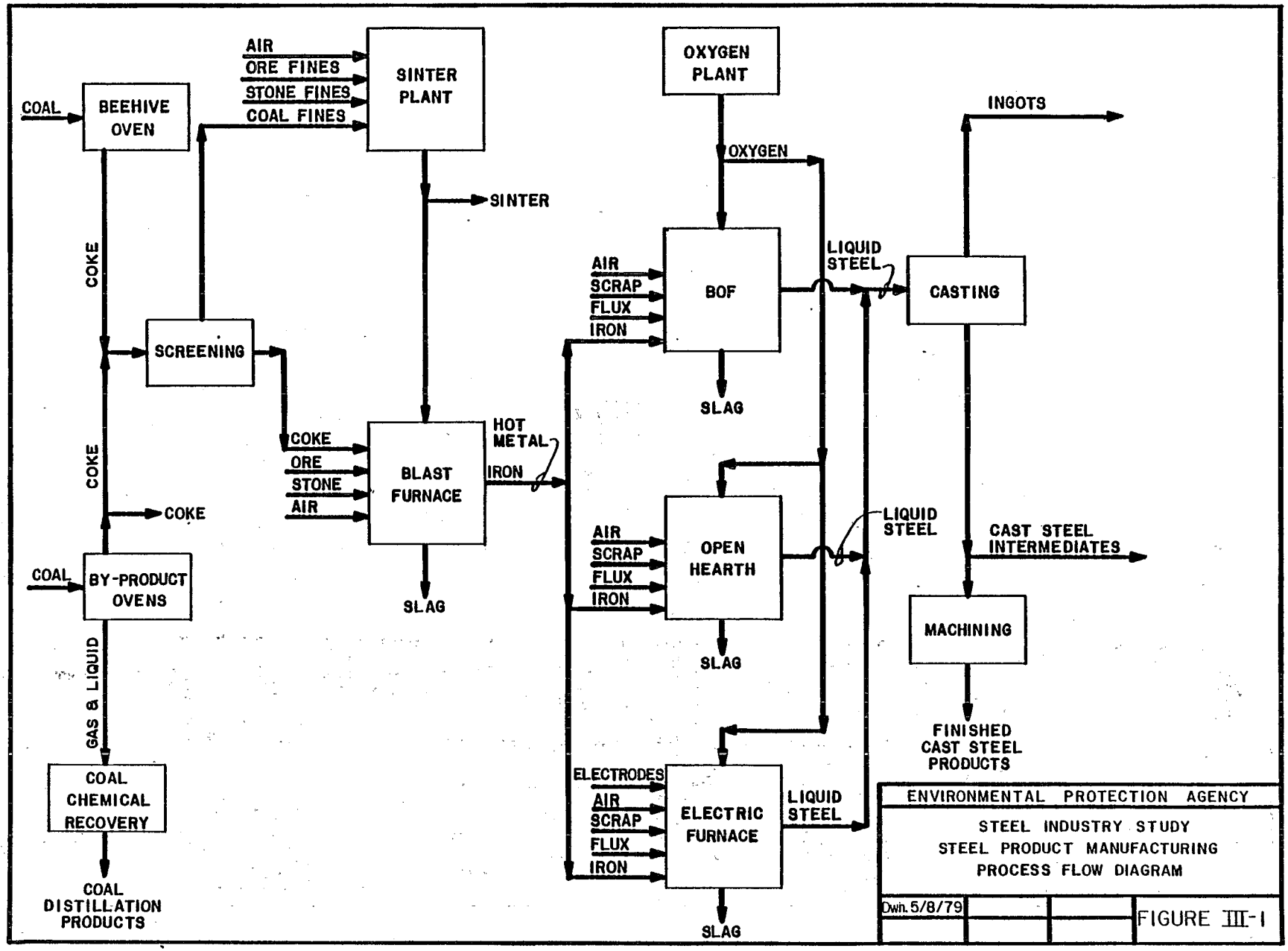
COAL
BEEHIVE OVEN
COKE
COKE
COKE
SCREENING
COAL
BY-PRODUCT OVENS
GAS & LIQUID
COAL CHEMICAL RECOVERY
COAL DISTILLATION PRODUCTS
AIR
ORE FINES
STONE FINES
COAL FINES
SINTER PLANT
SINTER
COKE
ORE
STONE
AIR
BLAST FURNACE
SLAG
HOT METAL
IRON
OXYGEN PLANT
OXYGEN
AIR
SCRAP
FLUX
IRON
BOF
SLAG
AIR
SCRAP
FLUX
IRON
OPEN HEARTH
SLAG
ELECTRODES
AIR
SCRAP
FLUX
IRON
ELECTRIC FURNACE
SLAG
LIQUID STEEL
LIQUID STEEL
LIQUID STEEL
CASTING
INGOTS
CAST STEEL INTERMEDIATES
MACHINING
FINISHED CAST STEEL PRODUCTS
ENVIRONMENTAL PROTECTION AGENCY
STEEL INDUSTRY STUDY
STEEL PRODUCT MANUFACTURING
PROCESS FLOW DIAGRAM
Dwn. 5/8/79
FIGURE III-1

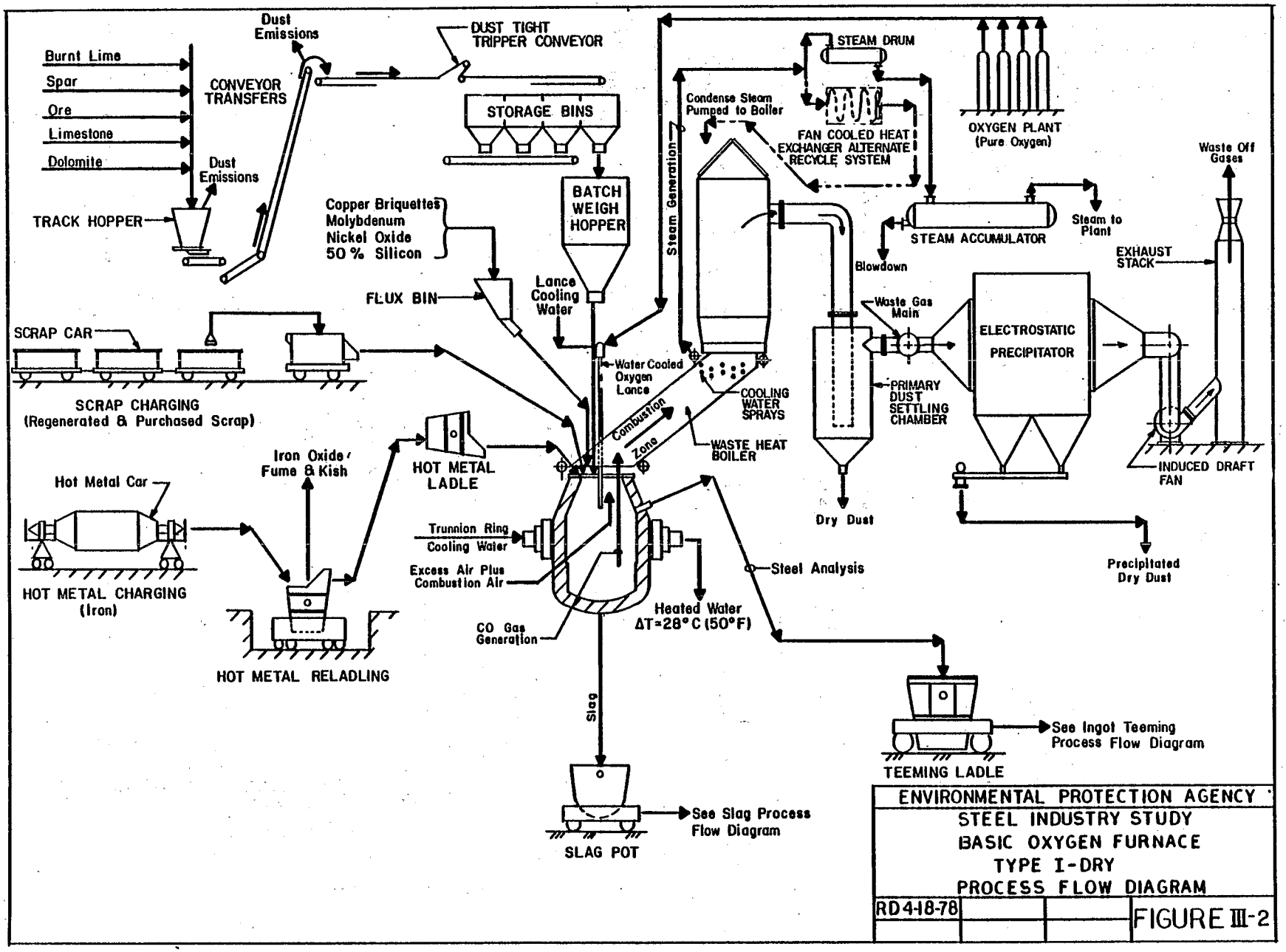
Burnt Lime
Spar
Ore
Limestone
Dolomite
TRACK HOPPER
Dust Emissions
CONVEYOR TRANSFERS
Dust Emissions
DUST TIGHT TRIPPER CONVEYOR
STORAGE BINS
BATCH WEIGH HOPPER
Copper Briquettes
Molybdenum
Nickel Oxide
50 % Silicon
FLUX BIN
Lance Cooling Water
SCRAP CAR
SCRAP CHARGING
(Regenerated & Purchased Scrap)
Hot Metal Car
HOT METAL CHARGING
(Iron)
Iron Oxide Fume & Kish
HOT METAL LADLE
HOT METAL RELADLING
Water Cooled Oxygen Lance
Combustion Zone
Trunnion Ring Cooling Water
Excess Air Plus Combustion Air
CO Gas Generation
Slag
SLAG POT
See Slag Process Flow Diagram
Heated Water
ΔT=28° C (50°F)
Steam Generation
Condense Steam Pumped to Boiler
STEAM DRUM
FAN COOLED HEAT EXCHANGER ALTERNATE RECYCLE SYSTEM
OXYGEN PLANT
(Pure Oxygen)
COOLING WATER SPRAYS
WASTE HEAT BOILER
Steel Analysis
STEAM ACCUMULATOR
Steam to Plant
Blowdown
Waste Gas Main
PRIMARY DUST SETTLING CHAMBER
Dry Dust
ELECTROSTATIC PRECIPITATOR
Precipitated Dry Dust
Waste Off Gases
EXHAUST STACK
INDUCED DRAFT FAN
TEEMING LADLE
See Ingot Teeming Process Flow Diagram
ENVIRONMENTAL PROTECTION AGENCY
STEEL INDUSTRY STUDY
BASIC OXYGEN FURNACE
TYPE I-DRY
PROCESS FLOW DIAGRAM
RD4-18-78
FIGURE III-2

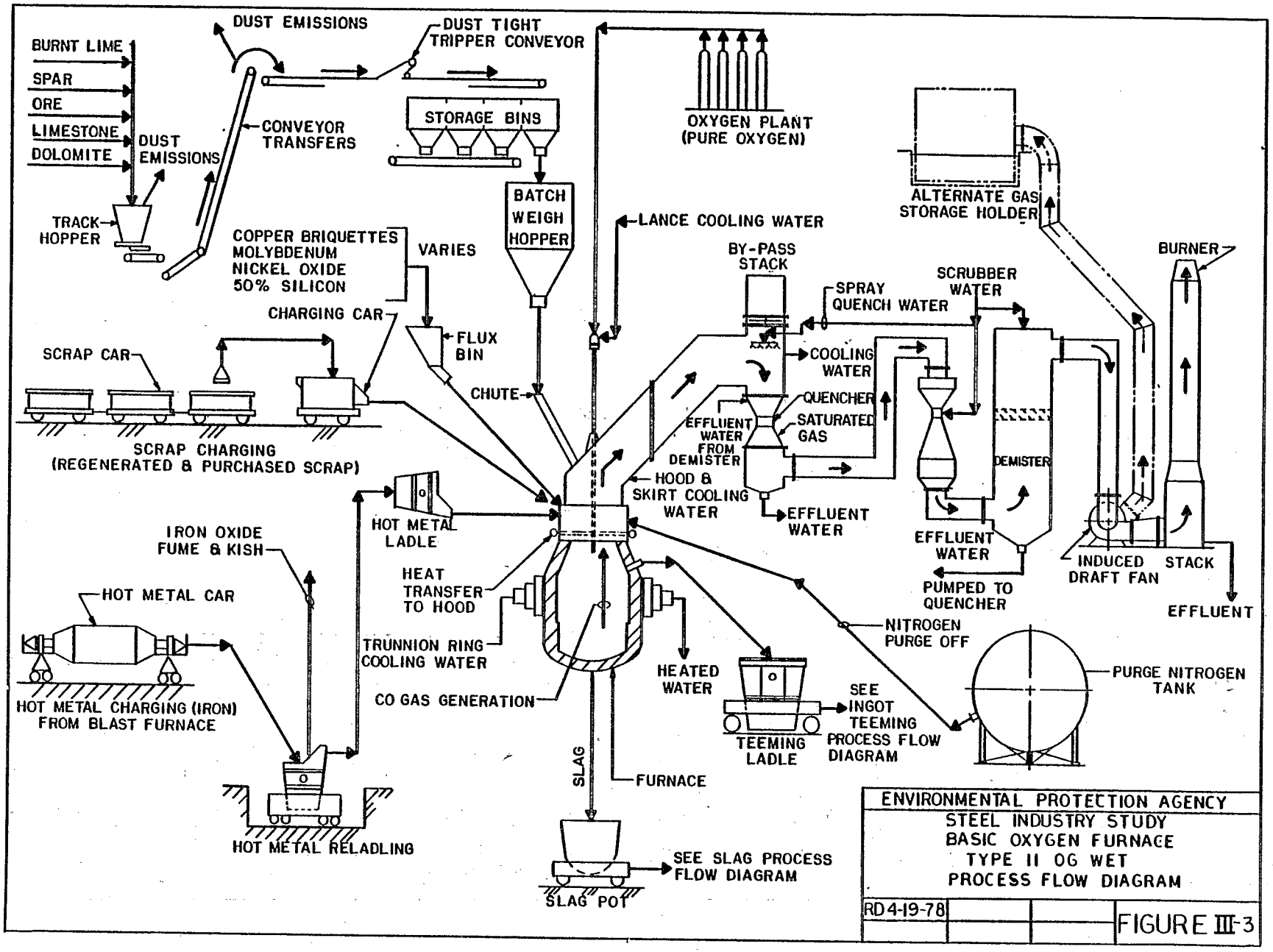
BURNT LIME
SPAR
ORE
LIMESTONE
DOLOMITE
DUST EMISSIONS
TRACK HOPPER
DUST EMISSIONS
CONVEYOR TRANSFERS
DUST TIGHT TRIPPER CONVEYOR
STORAGE BINS
BATCH WEIGH HOPPER
OXYGEN PLANT (PURE OXYGEN)
ALTERNATE GAS STORAGE HOLDER
BURNER
COPPER BRIQUETTES
MOLYBDENUM
NICKEL OXIDE
50% SILICON
VARIES
CHARGING CAR
FLUX BIN
SCRAP CAR
CHUTE
LANCE COOLING WATER
BY-PASS STACK
SPRAY QUENCH WATER
SCRUBBER WATER
COOLING WATER
QUENCHER
SATURATED GAS
EFFLUENT WATER FROM DEMISTER
HOOD & SKIRT COOLING WATER
EFFLUENT WATER
DEMISTER
EFFLUENT WATER
PUMPED TO QUENCHER
INDUCED DRAFT FAN
STACK
EFFLUENT
SCRAP CHARGING (REGENERATED & PURCHASED SCRAP)
HOT METAL LADLE
IRON OXIDE FUME & KISH
HOT METAL CAR
HEAT TRANSFER TO HOOD
TRUNNION RING COOLING WATER
CO GAS GENERATION
HEATED WATER
NITROGEN PURGE OFF
PURGE NITROGEN TANK
HOT METAL CHARGING (IRON) FROM BLAST FURNACE
TEEMING LADLE
SEE INGOT TEEMING PROCESS FLOW DIAGRAM
SLAG
FURNACE
HOT METAL RELADLING
SEE SLAG PROCESS FLOW DIAGRAM
SLAG POT
ENVIRONMENTAL PROTECTION AGENCY
STEEL INDUSTRY STUDY
BASIC OXYGEN FURNACE
TYPE II OG WET
PROCESS FLOW DIAGRAM
RD 4-19-78
FIGURE III-3

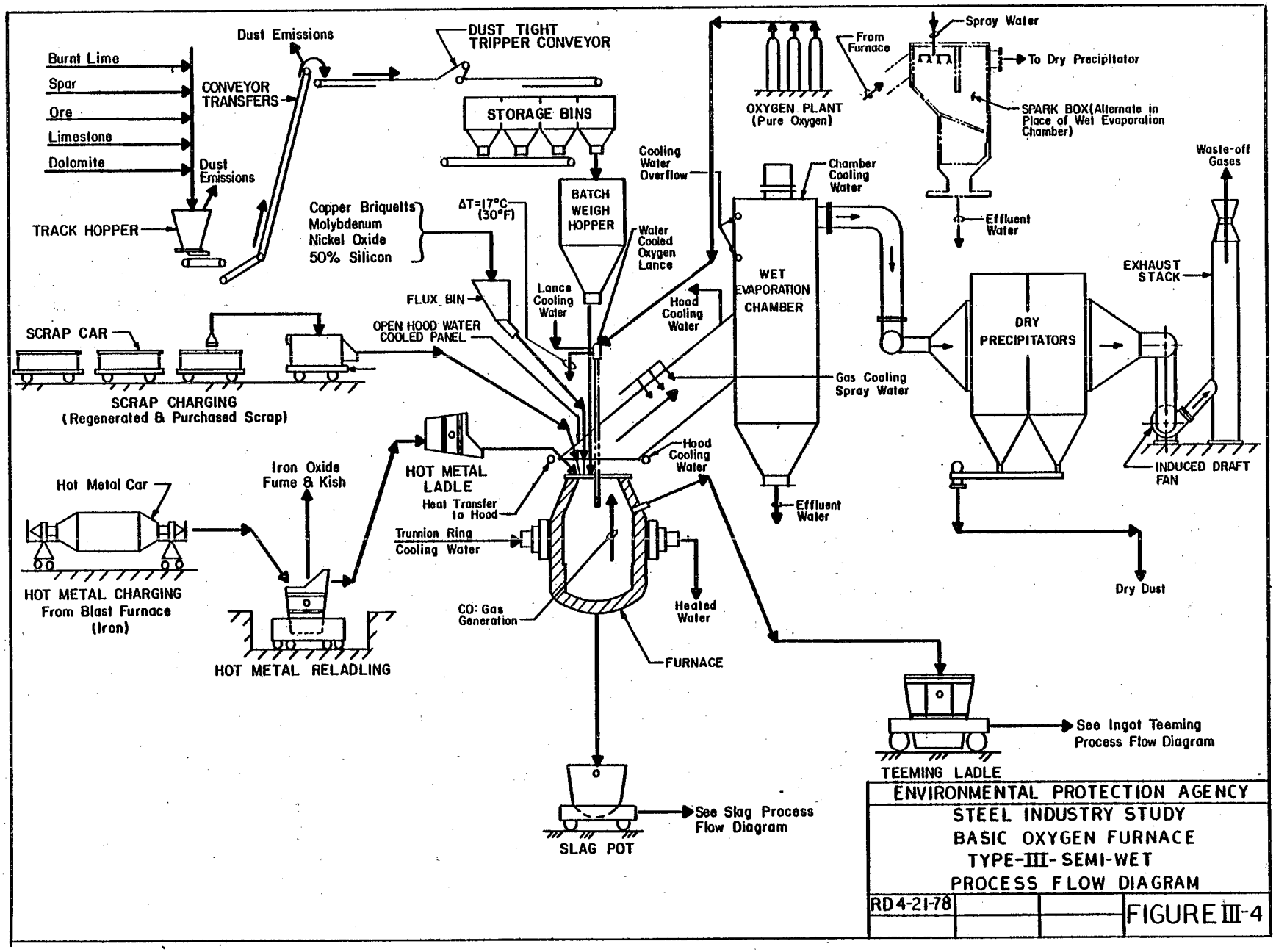
Burnt Lime
Spar
Ore
Limestone
Dolomite
CONVEYOR TRANSFERS
Dust Emissions
Dust Emissions
TRACK HOPPER
DUST TIGHT TRIPPER CONVEYOR
STORAGE BINS
BATCH WEIGH HOPPER
Copper Briquetts
Molybdenum
Nickel Oxide
50% Silicon
ΔT=17°C (30°F)
FLUX BIN
Lance Cooling Water
Water Cooled Oxygen Lance
Cooling Water Overflow
Hood Cooling Water
OPEN HOOD WATER COOLED PANEL
SCRAP CAR
SCRAP CHARGING
(Regenerated & Purchased Scrap)
HOT METAL LADLE
Heat Transfer to Hood
Hood Cooling Water
Trunnion Ring Cooling Water
CO: Gas Generation
Heated Water
FURNACE
Hot Metal Car
HOT METAL CHARGING
From Blast Furnace
(Iron)
Iron Oxide Fume & Kish
HOT METAL RELADLING
SLAG POT
See Slag Process Flow Diagram
OXYGEN PLANT
(Pure Oxygen)
From Furnace
Spray Water
To Dry Precipitator
SPARK BOX(Alternate in Place of Wet Evaporation Chamber)
Effluent Water
Chamber Cooling Water
WET EVAPORATION CHAMBER
Gas Cooling Spray Water
Effluent Water
DRY PRECIPITATORS
Dry Dust
Waste-off Gases
EXHAUST STACK
INDUCED DRAFT FAN
TEEMING LADLE
See Ingot Teeming Process Flow Diagram
ENVIRONMENTAL PROTECTION AGENCY
STEEL INDUSTRY STUDY
BASIC OXYGEN FURNACE
TYPE-III- SEMI-WET
PROCESS FLOW DIAGRAM
RD 4-21-78
FIGURE III-4

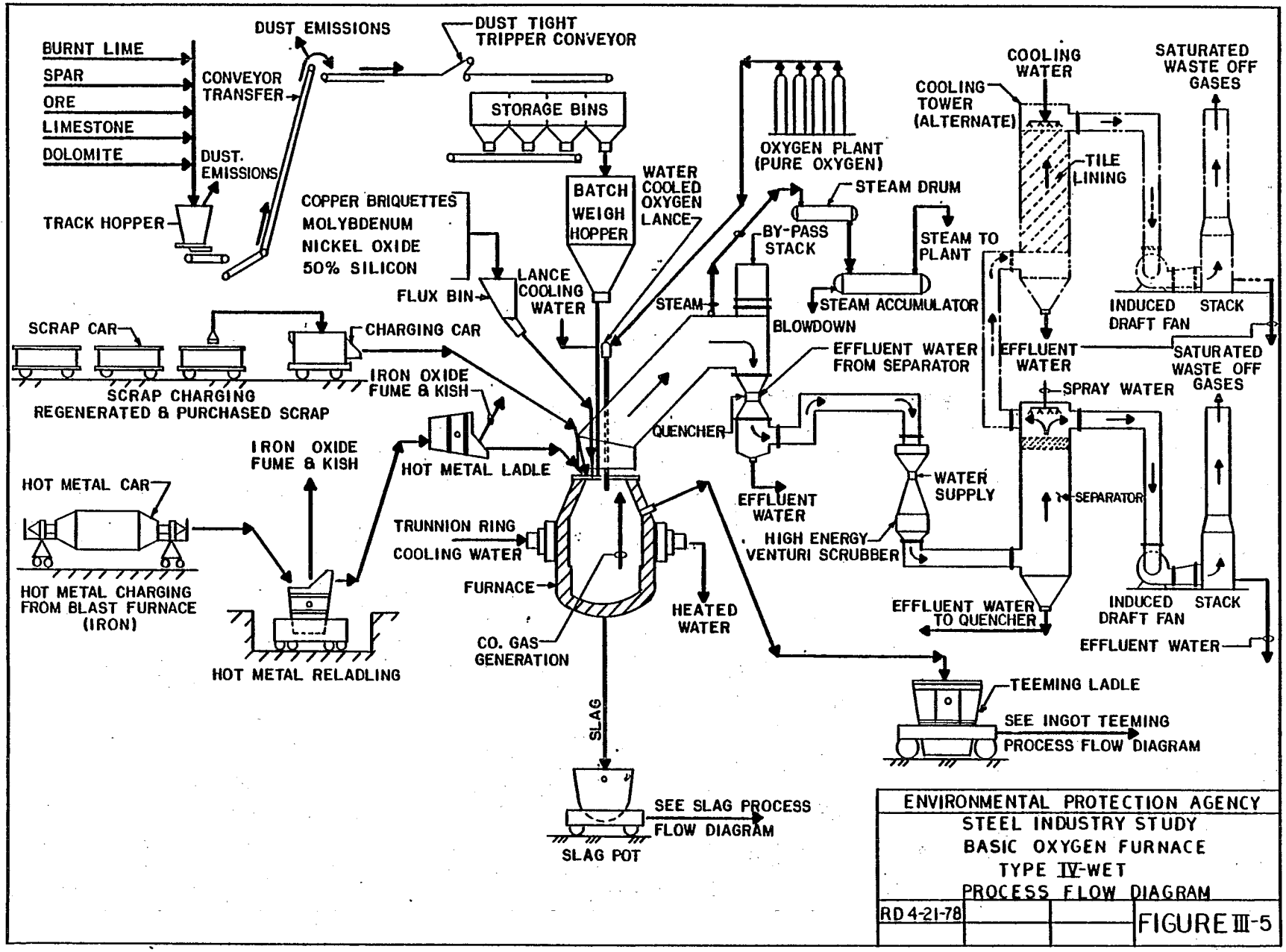

ENVIRONMENTAL PROTECTION AGENCY
STEEL INDUSTRY STUDY
BASIC OXYGEN FURNACE
TYPE IV-WET
PROCESS FLOW DIAGRAM

RD 4-21-78

FIGURE III-5

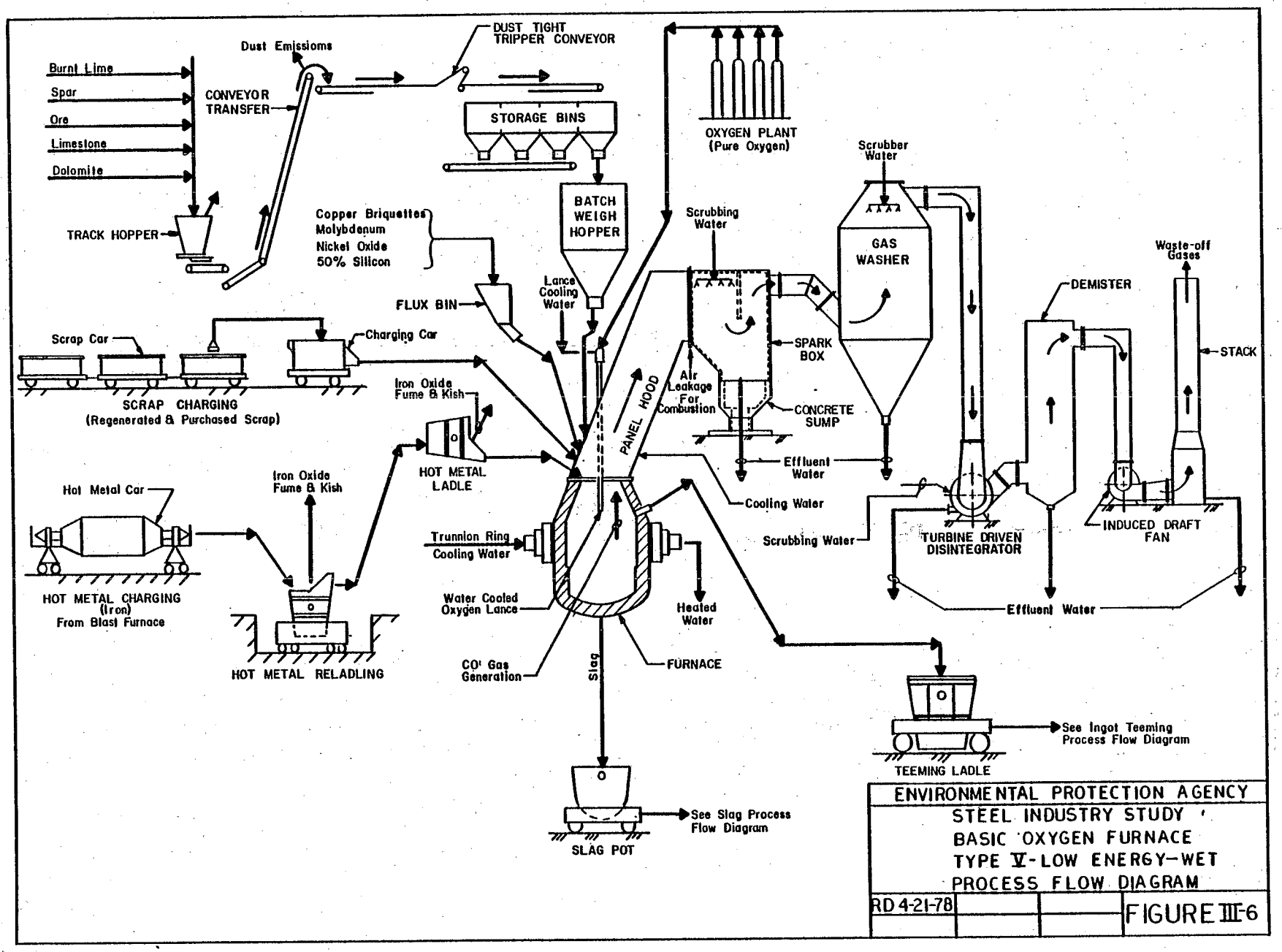

ENVIRONMENTAL PROTECTION AGENCY
STEEL INDUSTRY STUDY
BASIC OXYGEN FURNACE
TYPE V-LOW ENERGY-WET
PROCESS FLOW DIAGRAM

RD 4-21-78 | FIGURE III-6

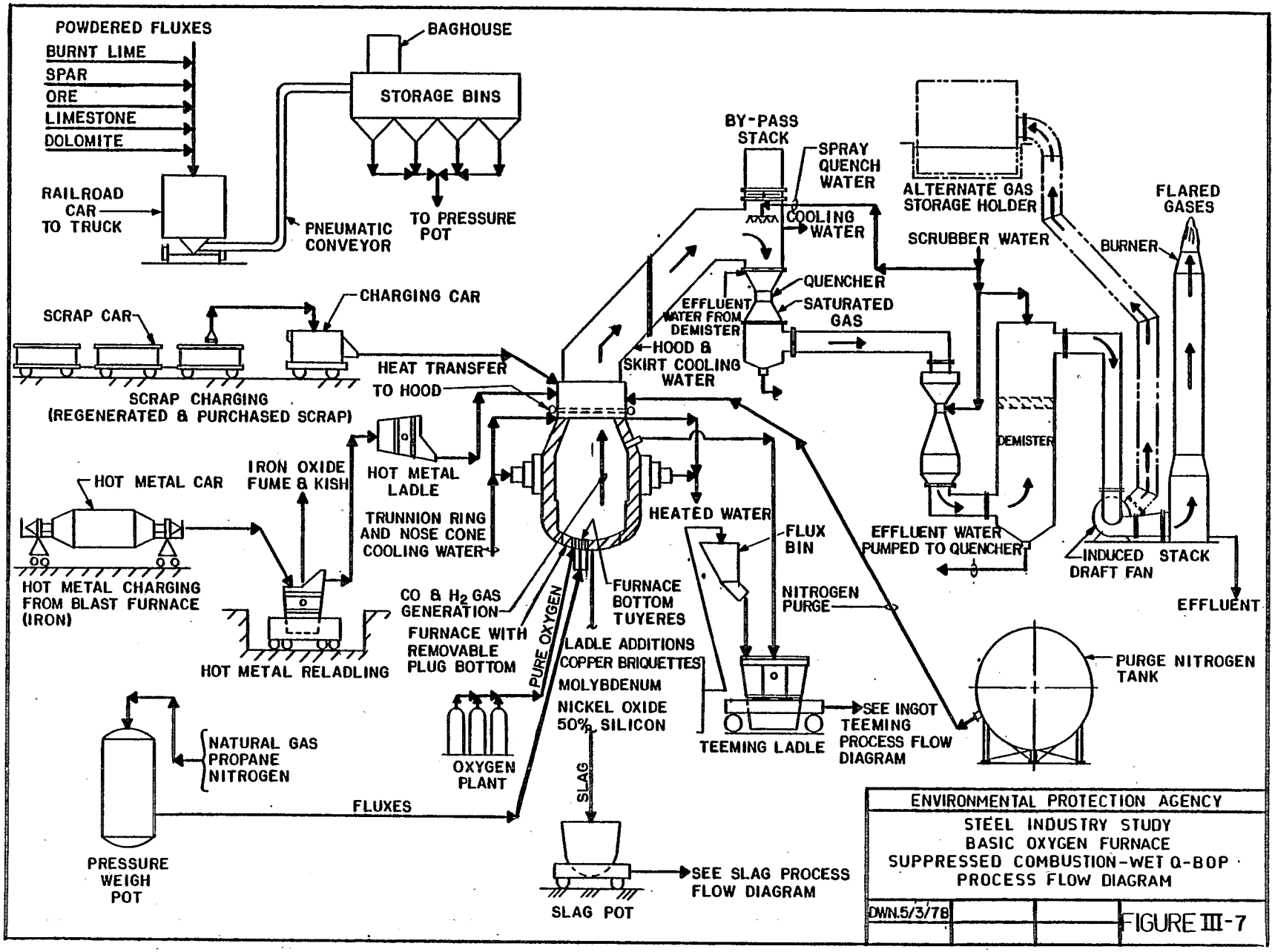
POWDERED FLUXES
BURNT LIME
SPAR
ORE
LIMESTONE
DOLOMITE
RAILROAD CAR TO TRUCK
BAGHOUSE
STORAGE BINS
PNEUMATIC CONVEYOR
TO PRESSURE POT
SCRAP CAR
CHARGING CAR
SCRAP CHARGING (REGENERATED & PURCHASED SCRAP)
HEAT TRANSFER TO HOOD
HOT METAL CAR
IRON OXIDE FUME & KISH
HOT METAL LADLE
TRUNNION RING AND NOSE CONE COOLING WATER
HOT METAL CHARGING FROM BLAST FURNACE (IRON)
HOT METAL RELADLING
CO & H_2 GAS GENERATION
FURNACE WITH REMOVABLE PLUG BOTTOM
PURE OXYGEN
FURNACE BOTTOM TUYERES
LADLE ADDITIONS
COPPER BRIQUETTES
MOLYBDENUM
NICKEL OXIDE
50% SILICON
OXYGEN PLANT
NATURAL GAS
PROPANE
NITROGEN
FLUXES
PRESSURE WEIGH POT
SLAG
SLAG POT
SEE SLAG PROCESS FLOW DIAGRAM
HEATED WATER
FLUX BIN
NITROGEN PURGE
TEEMING LADLE
SEE INGOT TEEMING PROCESS FLOW DIAGRAM
BY-PASS STACK
SPRAY QUENCH WATER
COOLING WATER
QUENCHER
SATURATED GAS
EFFLUENT WATER FROM DEMISTER
HOOD & SKIRT COOLING WATER
ALTERNATE GAS STORAGE HOLDER
SCRUBBER WATER
DEMISTER
EFFLUENT WATER PUMPED TO QUENCHER
FLARED GASES
BURNER
INDUCED DRAFT FAN
STACK
EFFLUENT
PURGE NITROGEN TANK
ENVIRONMENTAL PROTECTION AGENCY
STEEL INDUSTRY STUDY
BASIC OXYGEN FURNACE
SUPPRESSED COMBUSTION-WET Q-BOP
PROCESS FLOW DIAGRAM
DWN.5/3/78
FIGURE III-7

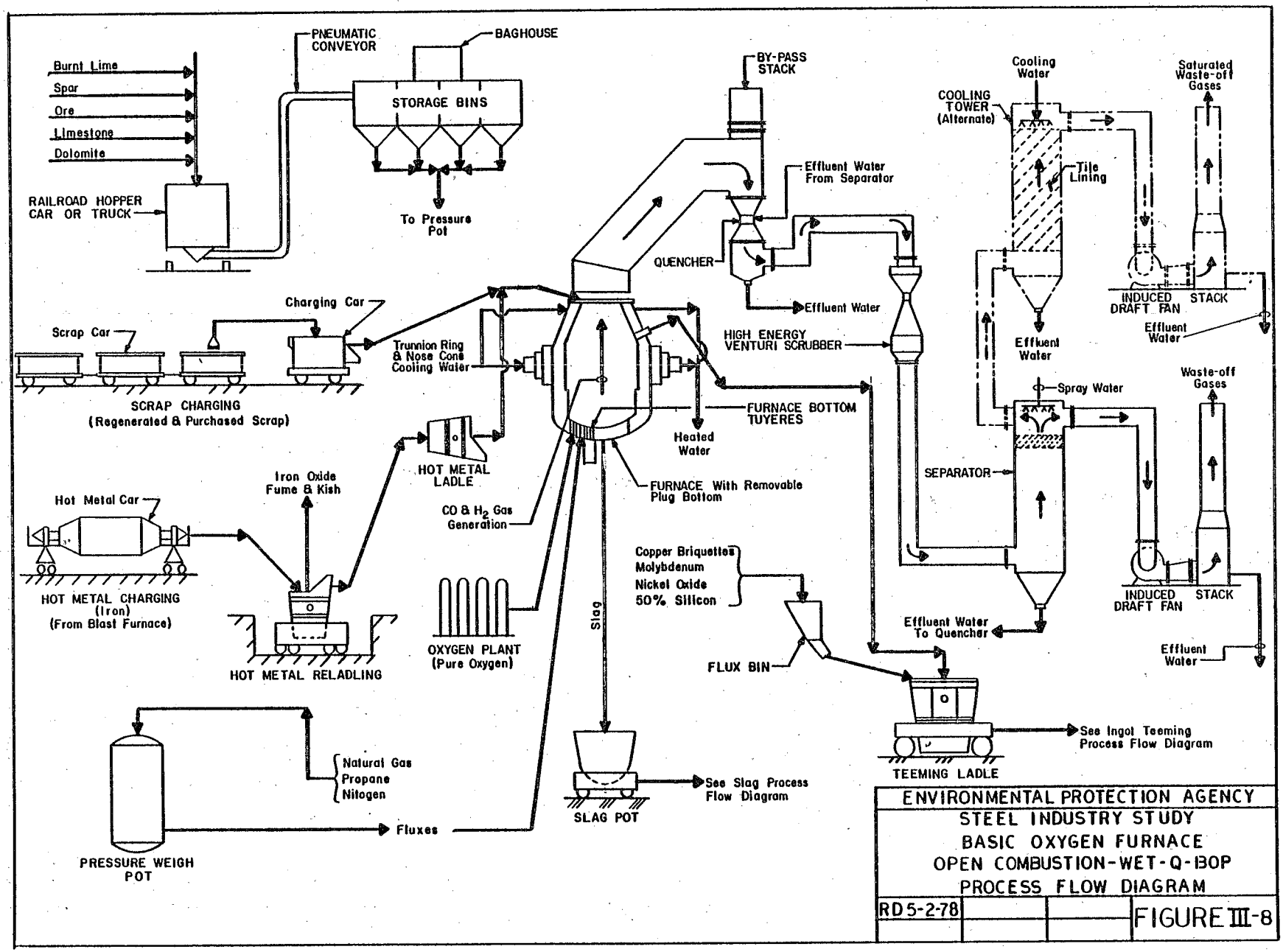

ENVIRONMENTAL PROTECTION AGENCY
STEEL INDUSTRY STUDY
BASIC OXYGEN FURNACE
OPEN COMBUSTION-WET-Q-BOP
PROCESS FLOW DIAGRAM

RD 5-2-78 | FIGURE III-8

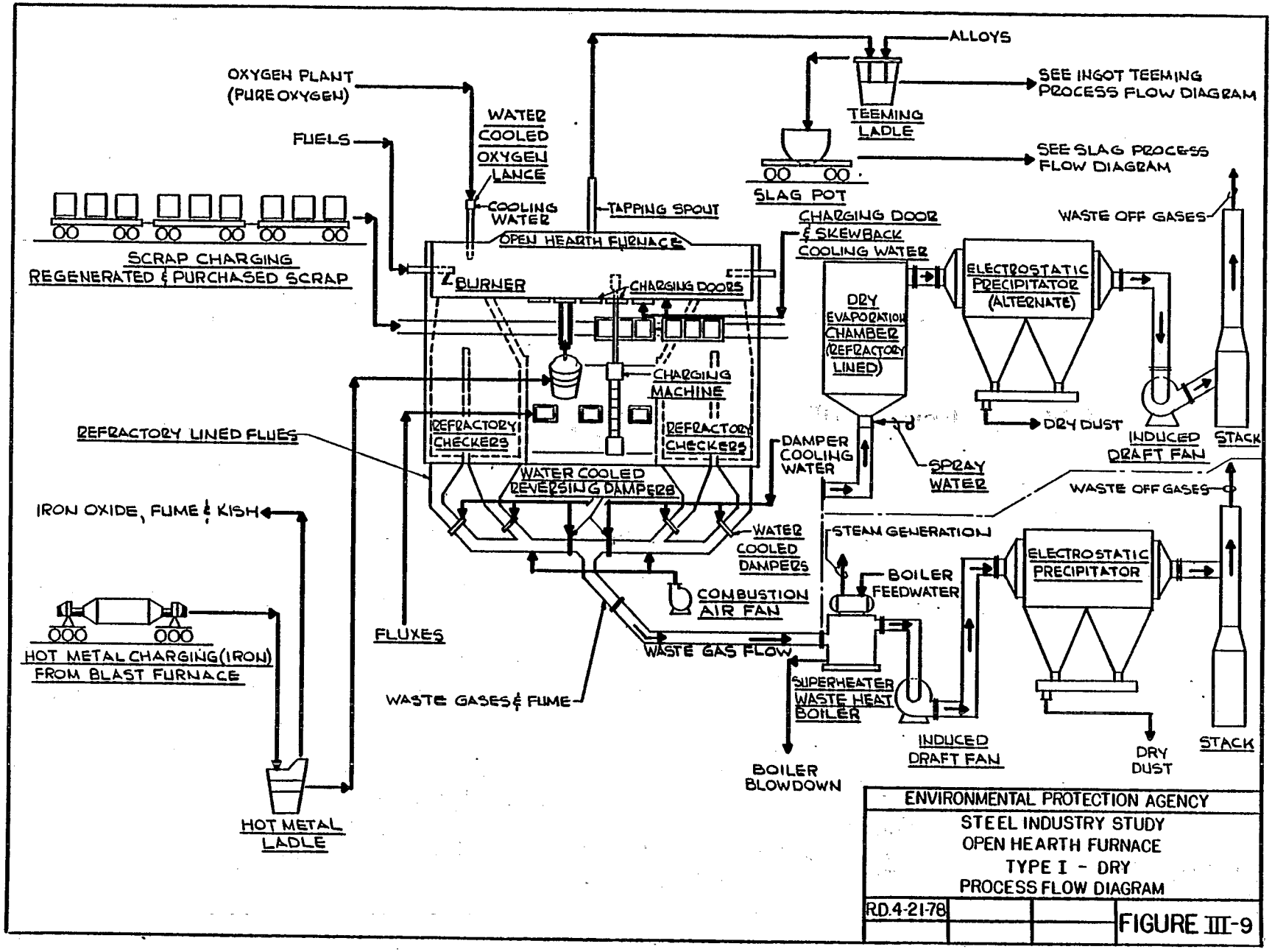

ENVIRONMENTAL PROTECTION AGENCY
STEEL INDUSTRY STUDY
OPEN HEARTH FURNACE
TYPE I - DRY
PROCESS FLOW DIAGRAM

RD.4-21-78

FIGURE III-9

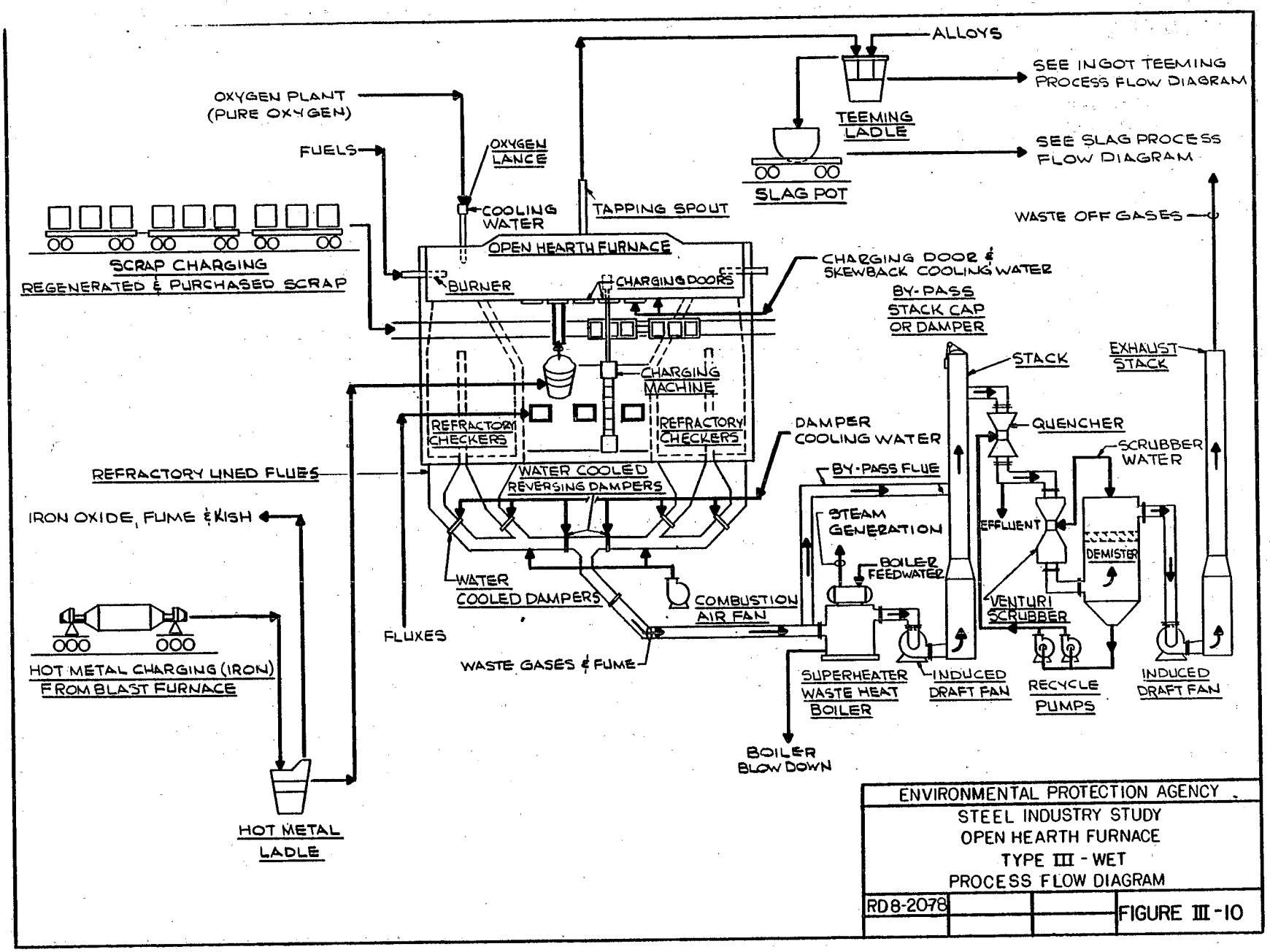

ENVIRONMENTAL PROTECTION AGENCY

STEEL INDUSTRY STUDY
OPEN HEARTH FURNACE
TYPE III - WET
PROCESS FLOW DIAGRAM

RD8-2078 | FIGURE III-10

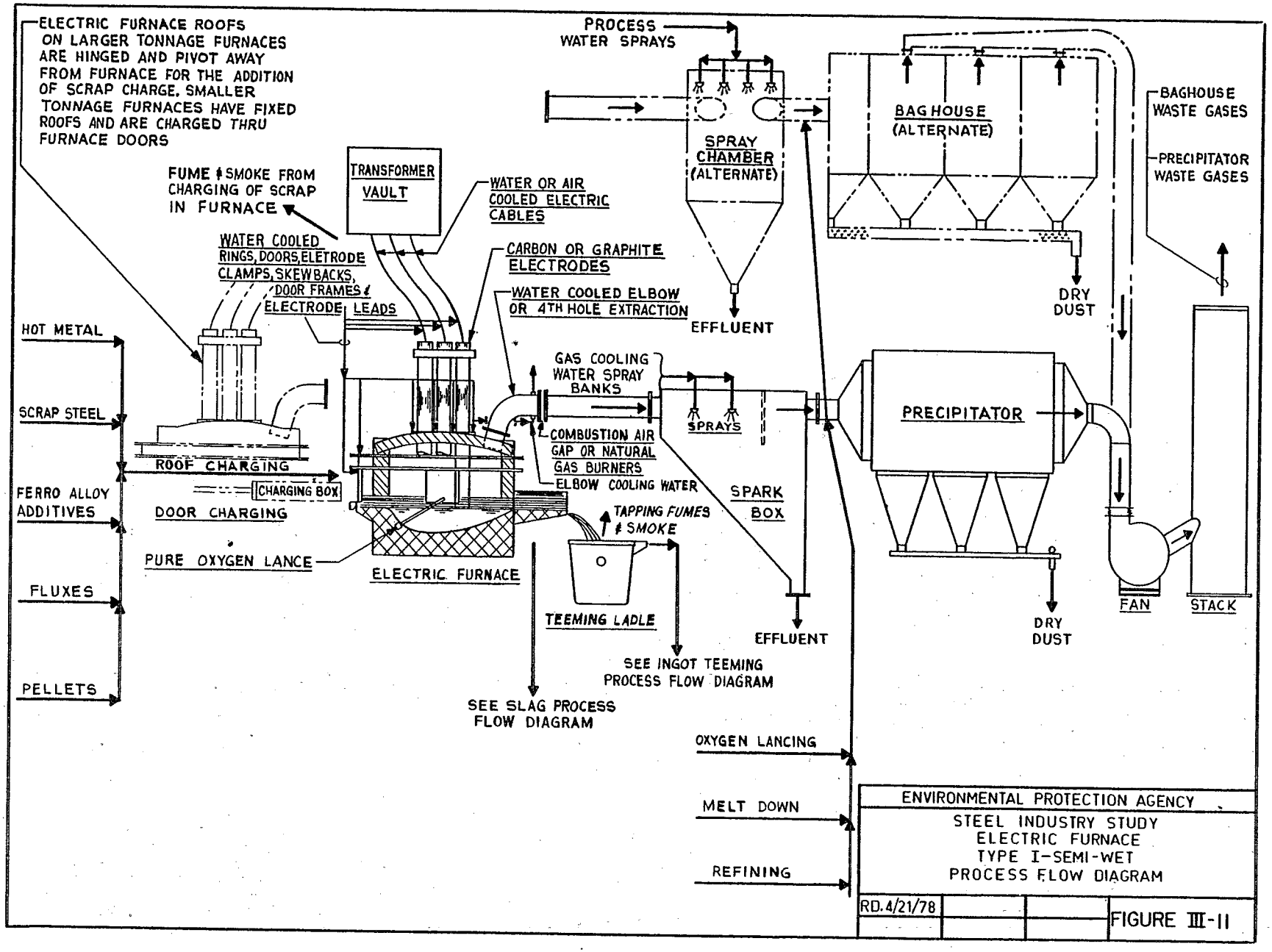
ELECTRIC FURNACE ROOFS ON LARGER TONNAGE FURNACES ARE HINGED AND PIVOT AWAY FROM FURNACE FOR THE ADDITION OF SCRAP CHARGE. SMALLER TONNAGE FURNACES HAVE FIXED ROOFS AND ARE CHARGED THRU FURNACE DOORS
PROCESS WATER SPRAYS
SPRAY CHAMBER (ALTERNATE)
BAGHOUSE (ALTERNATE)
BAGHOUSE WASTE GASES
PRECIPITATOR WASTE GASES
FUME & SMOKE FROM CHARGING OF SCRAP IN FURNACE
TRANSFORMER VAULT
WATER OR AIR COOLED ELECTRIC CABLES
WATER COOLED RINGS, DOORS, ELETRODE CLAMPS, SKEW BACKS, DOOR FRAMES & ELECTRODE LEADS
CARBON OR GRAPHITE ELECTRODES
WATER COOLED ELBOW OR 4TH HOLE EXTRACTION
EFFLUENT
DRY DUST
HOT METAL
SCRAP STEEL
GAS COOLING WATER SPRAY BANKS
SPRAYS
PRECIPITATOR
ROOF CHARGING
CHARGING BOX
DOOR CHARGING
COMBUSTION AIR GAP OR NATURAL GAS BURNERS
ELBOW COOLING WATER
SPARK BOX
FERRO ALLOY ADDITIVES
TAPPING FUMES & SMOKE
PURE OXYGEN LANCE
ELECTRIC FURNACE
TEEMING LADLE
EFFLUENT
DRY DUST
FAN
STACK
FLUXES
SEE INGOT TEEMING PROCESS FLOW DIAGRAM
PELLETS
SEE SLAG PROCESS FLOW DIAGRAM
OXYGEN LANCING
MELT DOWN
REFINING
ENVIRONMENTAL PROTECTION AGENCY
STEEL INDUSTRY STUDY
ELECTRIC FURNACE
TYPE I-SEMI-WET
PROCESS FLOW DIAGRAM
RD. 4/21/78
FIGURE III-11

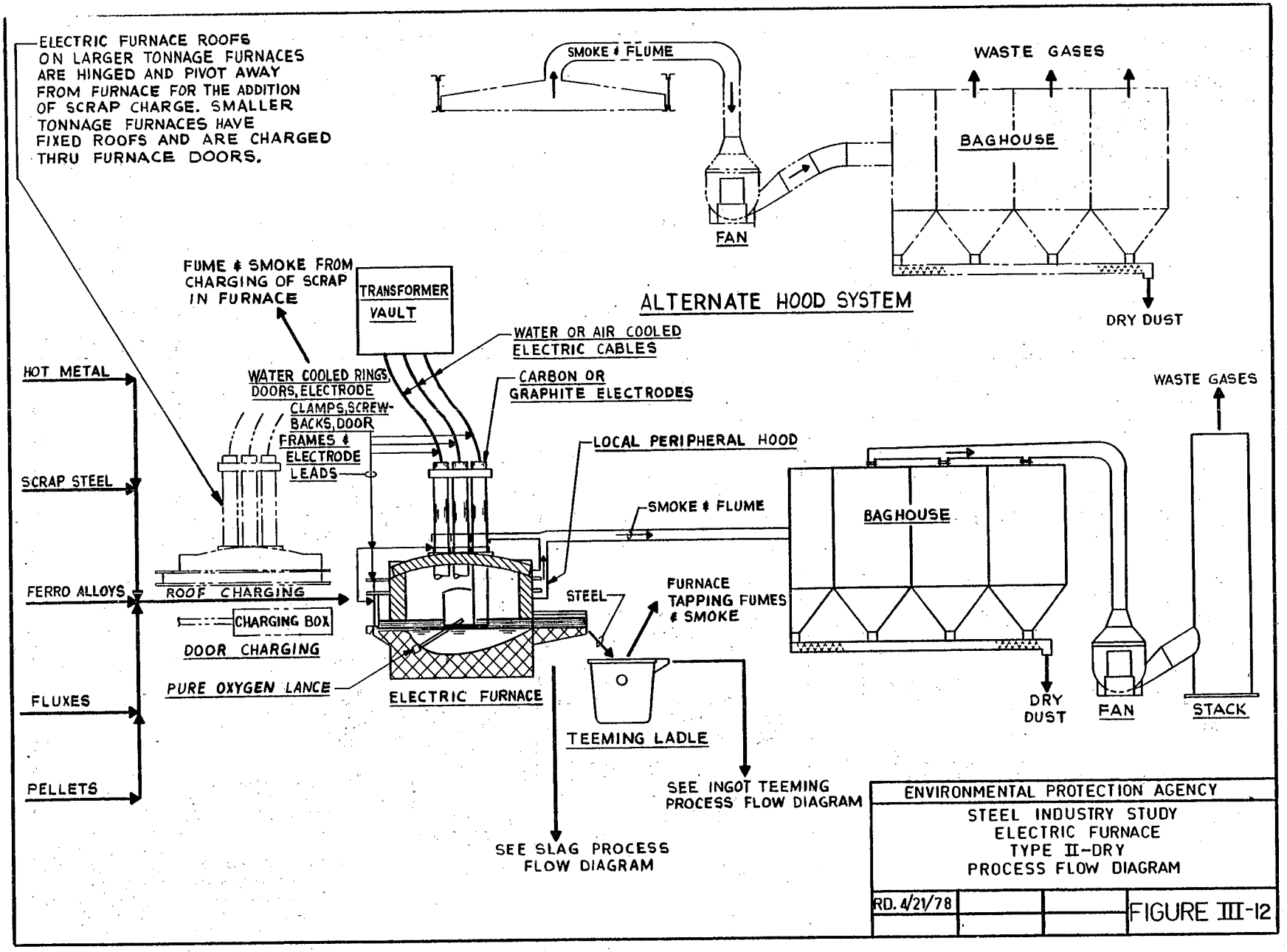
ELECTRIC FURNACE ROOFS ON LARGER TONNAGE FURNACES ARE HINGED AND PIVOT AWAY FROM FURNACE FOR THE ADDITION OF SCRAP CHARGE. SMALLER TONNAGE FURNACES HAVE FIXED ROOFS AND ARE CHARGED THRU FURNACE DOORS.
SMOKE & FLUME
WASTE GASES
BAGHOUSE
FAN
DRY DUST
ALTERNATE HOOD SYSTEM
FUME & SMOKE FROM CHARGING OF SCRAP IN FURNACE
TRANSFORMER VAULT
WATER OR AIR COOLED ELECTRIC CABLES
CARBON OR GRAPHITE ELECTRODES
WATER COOLED RINGS, DOORS, ELECTRODE CLAMPS, SCREW-BACKS, DOOR FRAMES & ELECTRODE LEADS
HOT METAL
SCRAP STEEL
FERRO ALLOYS
FLUXES
PELLETS
ROOF CHARGING
CHARGING BOX
DOOR CHARGING
PURE OXYGEN LANCE
ELECTRIC FURNACE
LOCAL PERIPHERAL HOOD
SMOKE & FLUME
STEEL
FURNACE TAPPING FUMES & SMOKE
TEEMING LADLE
SEE INGOT TEEMING PROCESS FLOW DIAGRAM
SEE SLAG PROCESS FLOW DIAGRAM
BAGHOUSE
WASTE GASES
DRY DUST
FAN
STACK
ENVIRONMENTAL PROTECTION AGENCY
STEEL INDUSTRY STUDY
ELECTRIC FURNACE
TYPE II-DRY
PROCESS FLOW DIAGRAM
RD. 4/21/78
FIGURE III-12

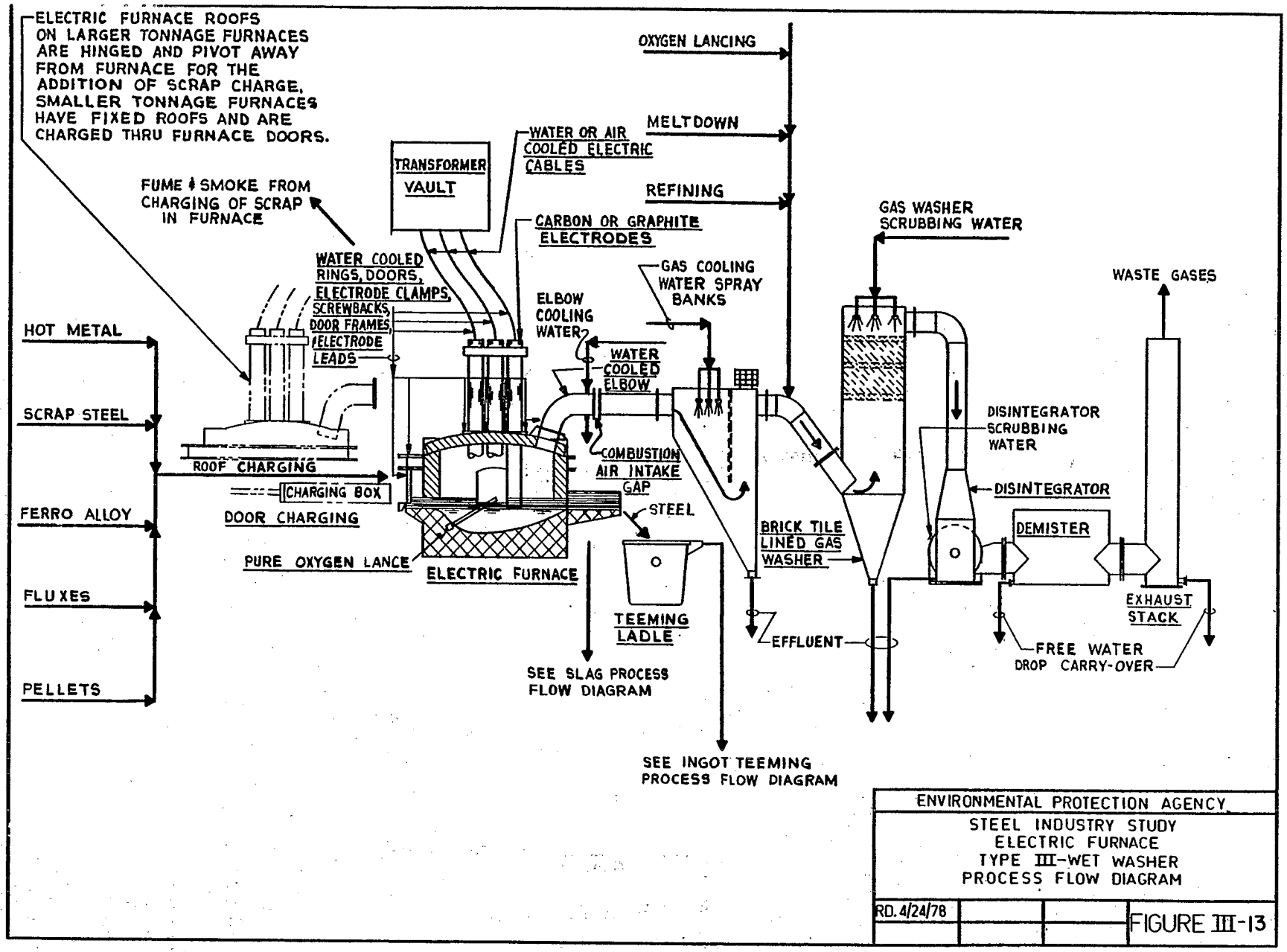

ENVIRONMENTAL PROTECTION AGENCY

STEEL INDUSTRY STUDY
ELECTRIC FURNACE
TYPE III-WET WASHER
PROCESS FLOW DIAGRAM

RD. 4/24/78

FIGURE III-13

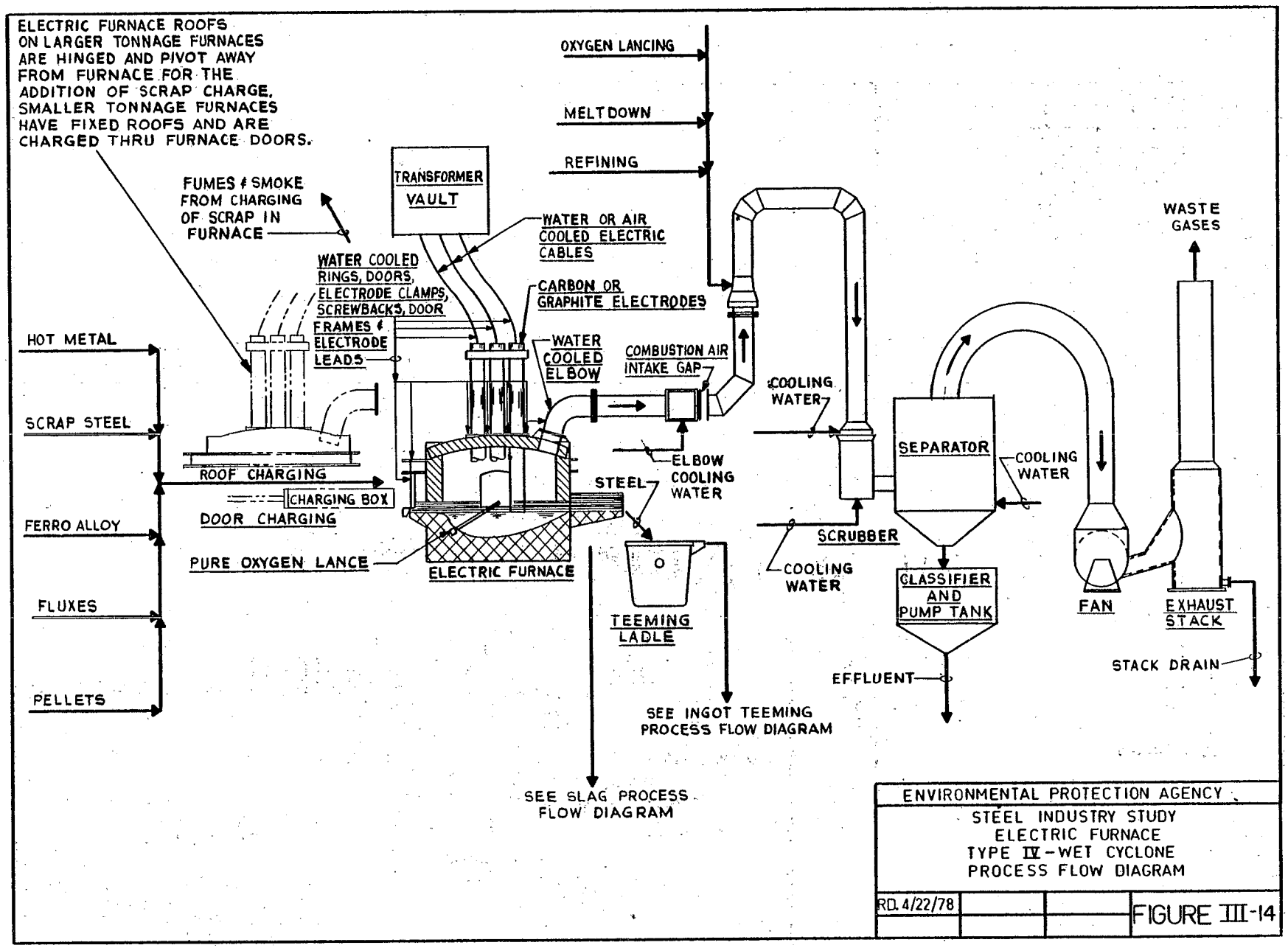
ELECTRIC FURNACE ROOFS ON LARGER TONNAGE FURNACES ARE HINGED AND PIVOT AWAY FROM FURNACE FOR THE ADDITION OF SCRAP CHARGE. SMALLER TONNAGE FURNACES HAVE FIXED ROOFS AND ARE CHARGED THRU FURNACE DOORS.
OXYGEN LANCING
MELTDOWN
REFINING
TRANSFORMER VAULT
FUMES & SMOKE FROM CHARGING OF SCRAP IN FURNACE
WATER OR AIR COOLED ELECTRIC CABLES
WATER COOLED RINGS, DOORS, ELECTRODE CLAMPS, SCREWBACKS, DOOR FRAMES & ELECTRODE LEADS
CARBON OR GRAPHITE ELECTRODES
WATER COOLED ELBOW
COMBUSTION AIR INTAKE GAP
HOT METAL
SCRAP STEEL
ROOF CHARGING
CHARGING BOX
DOOR CHARGING
FERRO ALLOY
FLUXES
PELLETS
PURE OXYGEN LANCE
ELECTRIC FURNACE
STEEL
ELBOW COOLING WATER
TEEMING LADLE
SEE INGOT TEEMING PROCESS FLOW DIAGRAM
SEE SLAG PROCESS FLOW DIAGRAM
COOLING WATER
SCRUBBER
COOLING WATER
SEPARATOR
COOLING WATER
CLASSIFIER AND PUMP TANK
EFFLUENT
FAN
WASTE GASES
EXHAUST STACK
STACK DRAIN
ENVIRONMENTAL PROTECTION AGENCY
STEEL INDUSTRY STUDY
ELECTRIC FURNACE
TYPE IV-WET CYCLONE
PROCESS FLOW DIAGRAM
RD. 4/22/78
FIGURE III-14

STEELMAKING SUBCATEGORY

SECTION IV

SUBCATEGORIZATION

Introduction

In reviewing the effluent limitations originally promulgated in 1974, and in developing the BPT, BAT, and BCT limitations and NSPS, PSES, and PSNS, the Agency evaluated the expanded data base to assure that the limitations and standards sufficiently accommodate variations within the industry and each steelmaking subdivision. Although basic oxygen furnace, open hearth furnace, and electric arc furnace remain as the major subdivisions within the steelmaking subcategory, the segments within the BOF subdivision were revised to provide a more accurate characterization of BOF steelmaking operations. The open combustion and suppressed combustion subdivisions were developed to take into account differences in wastewater characteristics and process water usage. The original and revised segments and subdivisions of the steelmaking subcategory are presented below:

Subcategories and Subdivisions (1974)	Revised Subdivisions and Segments
Basic Oxygen Furnace (BOF)	Basic Oxygen Furnace (BOF)
a. Semi-wet air pollution controls	a. Semi-wet air pollution controls
b. Wet air pollution controls	b. Wet air pollution controls - suppressed combustion
	c. Wet air pollution controls - open combustion
Open Hearth Furnace (OH)	Open Hearth Furnace (OH)
a. Wet air pollution controls	a. Wet air pollution controls
Electric Arc Furnace (EAF)	Electric Arc Furnace (EAF)
a. Semi-wet air pollution controls	a. Semi-wet air pollution controls
b. Wet air pollution controls	b. Wet air pollution controls

Although the Agency considered many factors in evaluating variations among and within the steelmaking subdivisions, all of the pertinent variations were related to the type of steelmaking furnace or the type of air pollution control system used.

The other factors considered in evaluating process differences include final product, raw materials, size and age, and geographic location.

The following discussions address these factors and substantiate the segments developed.

Factors Considered in the
Subdivision of the Steelmaking Subcategory

Manufacturing Process and Equipment

The principal element of steelmaking manufacturing processes and equipment, with regard to the development of effluent limitations, is the type of gas cleaning system. The systems normally employed are dry, semi-wet, and wet (see Section III). Since dry gas cleaning systems result in no wastewater or sludge discharge, only semi-wet and wet systems are addressed in this report.

The semi-wet gas cleaning system uses a spark box chamber to reduce the furnace off-gas temperature prior to cleaning in precipitators or other dry dust collectors (i.e., baghouses). The gases are sprayed with water to insure proper temperature reduction so that they may be introduced to the dry collectors without causing damage. Most of the water applied to the spark box is evaporated, however, due to overspraying and the limited retention time involved, some water remains, eventually leaving as a wastewater discharge.

Wet gas cleaning systems, on the other hand, normally have Venturi scrubbers for particulate removal. Scrubber systems are used in both the open combustion and suppressed combustion methods of BOF gas collection. The open combustion method uses a gas collection hood, open to the atmosphere, placed just above the BOF vessel. In contrast to open combustion, the hood in the suppressed combustion system is fitted to the BOF vessel and is closed to the atmosphere. The difference in gas collection methods results in differences in the quantity and quality of wastewater generated. The differences in the wastewaters generated by the various gas cleaning systems, and the rationale for these differences, is presented in the subsequent discussions regarding wastewater characteristics, wastewater treatability and process water usage.

The open hearth furnace and electric arc furnace steelmaking processes do not exhibit the variations in the types of wet air pollution control systems noted above for BOF operations. However, semi-wet air pollution control systems are used in EAF operations and wet air pollution control systems are used in both EAF and open hearth operations.

No manufacturing processes or equipment, other than the type of gas cleaning system, affect the segmentation of the respective steelmaking subdivisions.

Final Products

The final product of the various steelmaking operations is molten steel. The Agency found that segmentation on the basis of final product is not appropriate.

Raw Materials

While the raw materials for BOF, OH, and EAF operations may be somewhat different (different fluxes or scrap steel and molten iron charges), the Agency concluded that further segmentation of the steelmaking subdivisions on the basis of raw materials is not appropriate. The segments described above sufficiently accommodate variations related to raw materials.

A. BOF Steelmaking

BOF steelmaking operations can produce different steel compositions as a result of alloying. However, alloying is generally accomplished in the steel teeming ladle, so that the furnace product is similar. The only major difference in the steels lies in the carbon content which may vary, but always remains less than 1%. The oxygen consumption rates (SCF/ton of steel) and, consequently, the off-gas volumes are approximately the same regardless of the final carbon content in the finished steel.

A survey of all BOFs indicates that only one of the thirty wet BOF shops in the United States produces more than 50% of its output as specialty steel. More than 50% of the output from other wet BOF shops is carbon steel. The one shop that produces more than 50% speciality steel is an open combustion system. Examination of the wastewater flow and monitoring data for this plant, in comparison with other sampled open combustion plants, shows no significant variations. These data are presented in Tables VII-5 and VII-6. Based upon sampling visit, DCP, and D-DCP data, the Agency concluded that BOF raw materials do not affect wastewater quality or quantity and thus were not used as a basis for segmentation.

B. Open Hearth Steelmaking

Although variations in scrap content can affect wastewater quality, the resultant variations in wastewater quality are such that the Agency's selection of model wastewater treatment facilities was not affected. While several steel compositions can be produced, alloying is generally accomplished in the steel bath after the heat of steel is made or in the ladle after tapping, thus, not significantly affecting the gas cleaning wastewaters.

A survey of all open hearth shops generating wastewaters indicates that none can be classified as specialty steel

producers. All open hearth shops produce primarily carbon steel. Based upon sampled plant and DCP data, the Agency concluded that open hearth process raw materials do not affect wastewater quality and quantity to a significant extent and thus have not been used as a basis for segmentation.

C. Electric Arc Furnace Steelmaking

Raw materials, in the form of fluxes and cold scrap metal, are charged to electric arc furnaces. Similar types and quantities of fluxes are used in EAF steelmaking operations and thus do not vary significantly among the shops although variations in scrap could affect wastewater quality. The Agency does not believe further segmentation is warranted because these variations can be adequately controlled in the model treatment systems considered for the treatment of these wastewaters.

Electric arc furnaces are generally used for the production of special alloy steels ranging from high strength low alloy steels to ferro-alloy products such as ferro-silicon and ferromanganese steels. Over 95% of the special alloy furnaces have dry baghouse systems, and thus have no wastewater discharges. There are currently eight EAF plants (nine shops) in the United States which have wet gas cleaning systems and three plants (three shops) which have semi-wet systems. Two of the plants with wet gas cleaning systems (0060D and 0860H) are primarily specialty steel producers. While the remaining EAF shops produce primarily carbon steel, varying amounts of specialty steel are produced as well. The data obtained through the sampling visits, DCPs, and D-DCPs indicate little difference in wastewater quality and quantity between carbon and specialty shops. Hence, raw materials do not affect the segmentation of the electric arc furnace subdivision.

Wastewater Characteristics

As noted above, the type of gas cleaning system used has a pronounced effect upon the quality of the wastewaters generated. The quantity and size of the particulates vary with the type of gas cleaning system used.

A. BOF Steelmaking

Semi-wet system wastewaters are characterized by relatively small quantities of large suspended particulate matter. A semi-wet system is designed primarily to cool the hot gases in a spark box before they enter the dry collection systems in which the particulates are removed from the gas stream. However, due to the brief contact between water and the particulate laden gases, only a small portion of the particulate load, mainly the larger, slower moving particulates, is captured by the process waters. On the other hand, a wet scrubber system is specifically designed to remove nearly all of the particulates from the gas stream.

Therefore, higher wastewater flows and pollutant loadings result. Average suspended solids concentrations for the raw wastewaters for each of the three BOF segments are shown below:

Semi-Wet	375 mg/l
Wet-Suppressed Combustion	720 mg/l
Wet-Open Combustion	4200 mg/l

These data are based upon EPA surveys of steelmaking operations. The complete survey results are presented in Tables VII-2 through VII-6.

The wastewater characteristics from BOF operations differ with the type of gas collection method used (i.e., suppressed combustion or open combustion). The particulates emitted in an open combustion system will be primarily Fe_2O_3 due to the introduction of excess air to the system. Consequently, combustion is more complete and 90% of the particulates are of submicron size. Suppressed combustion, however, results in the formation of larger size particulates consisting of FeO and Fe_3O_4, as well as Fe_2O_3. Suppressed combustion systems provide incomplete combustion as only small quantities of outside air enter the system. As a result, only 30-40% of the particulates are of submicron size. In addition, the suppressed combustion configuration acts to contain the heavier particulates in the furnace with the result that wastewater suspended solids concentrations are lower.

The differences noted above along with differences in applied and discharge flow rates led the Agency to subdivide BOF operations into the semi-wet, wet-suppressed combustion, and wet-open combustion segments.

B. Open Hearth Steelmaking

Both dry and wet gas cleaning systems are used for open hearth operations. The average raw wastewater suspended solids concentration for the wet type of gas cleaning system is 1700 mg/l.

The Agency obtained the above data through its sampling surveys (see Tables VII-7 and VII-8).

C. Electric Arc Furnace Steelmaking

Semi-wet and wet gas cleaning systems similar to those described previously for the BOF steelmaking process are used at electric furnace operations. Electrostatic precipitators or filter cloth baghouses are employed in the dry systems. Following are the average raw wastewater suspended solids concentrations for the two EAF wet gas cleaning systems.

Semi-wet	2,200 mg/l
Wet	3,400 mg/l

The Agency obtained the above data during its sampling surveys (see Tables VII-9 through VII-12). Based upon wastewater volumes and the above data, the Agency believes the segmentation of EAF operations into semi-wet and wet systems is appropriate.

Wastewater Treatability

The treatability of wastewaters from each steelmaking operation is basically the same. The major treatment components used in these operations include gravity sedimentation and recycle. Coagulant aids are added at many plants to enhance suspended solids removals. Vacuum filters are used to dewater the sludges removed in the treatment process. Because of these similarities in the treatment of steelmaking process wastewaters, further segmentation of the steelmaking subdivisions based upon wastewater treatability is not required.

Size and Age

The Agency considered the impact of size and age on the segmentation of the steelmaking subdivisions. Possible correlations relating the effects of age and size upon such elements as wastewater flow, wastewater characteristics and the ability to retrofit treatment equipment to existing facilities were analyzed. The Agency did not find any relationships and, thus, determined that size and age have no significant impact upon subdivision or segmentation.

Analysis of the data (refer to the Section III summary tables) failed to yield any correlations between the size of a steelmaking shop and any pertinent factors such as process water usage, wastewater characteristics, or effluent flow. Figures IV-1 through IV-6 illustrate the comparisons of effluent flow (gal/ton) vs. shop size (tons per day capacity). These figures also depict treatment model sizes and effluent flows. Effluent flow reflects the installation of recycle systems and, thus, provides a representation of wastewater treatment. As shown, the size of a steelmaking shop does not significantly affect the ability to recycle and thus attain low effluent flows. A review of EPA survey data (refer to the tables in Section VII) also shows no relationship between shop size and the characteristics of the wastewaters generated. Therefore, the Agency concluded that it is not appropriate to further segment the steelmaking subdivisions based upon the size of a steelmaking shop.

The Agency examined the age of a shop as a possible basis for the segmentation of the steelmaking subdivisions. With regard to BOF shops, however, age is not particularly significant. Referring to the data base (Section III summary tables), the oldest BOF now in operation was installed in 1955 while most were built in the 1960s. Hence, there is little variation in relative age among the BOF shops. The same consideration applies to the four open hearth-wet shops, as

their first years of production fall within a period of six years. Following the same concepts used in comparing effluent flow and shop size, Figures IV-7 through IV-12 illustrate the relationship of effluent flow vs. age. The age of a steelmaking shop was found to have no significant effect on the ability to recycle and thus attain a low effluent flow.

Further analysis indicates that the age of a steelmaking shop has no effect on the quality or quantity of wastewaters generated. Within the segments outlined by the different gas cleaning systems, older shops were found to generate wastewaters similar in quality and quantity to those of newer shops. Also the treatability of these wastewaters was found to be similar in all instances.

The Agency also addressed the problem of retrofitting water pollution control equipment as part of the shop age analysis. The ability to retrofit pollution control equipment has been demonstrated at many plants as shown in Tables IV-1 through IV- 3. These examples illustrate the fact that water pollution control equipment can be installed on existing plant facilities. In addition, the Agency analyzed the cost of retrofit to determine whether older plants incurred additional capital expenditures to install new water pollution control equipment. D-DCPs were used to solicit retrofit cost information. D-DCP responses for seven of thirteen steelmaking shops indicate that retrofit costs were not applicable as the wastewater treatment systems were installed in conjunction with the installation of the furnaces. In addition, the responses for four shops were inconclusive as retrofit costs were not available, capital expenditures for air pollution control equipment were included, or components not related to the treatment of process wastewaters were included. However, the data provided for two shops (one open hearth and one electric arc furnace) indicate no retrofit costs were required. The equipment and retrofit costs for older plants are similar to those for newer plants. The add-on treatment components required for compliance with BAT limitations do not involve significant retrofit costs. The retrofit issue as it pertains to industry-wide costs is addressed in Volume I.

Based upon the above, the Agency finds that both old and newer production facilities generate similar raw wastewater pollutant loadings; that pollution control facilities can be and have been retrofited to both old and newer production facilities without substantial retrofit costs; that these pollution control facilities can and are achieving the same effluent quality; and, that further subdivision or further segmentation within this subcategory on the basis of age or size is not appropriate.

Geographic Location

The Agency analyzed the relationships between location and pertinent factors such as wastewater usage, wastewater characteristics, and wastewater treatability. However, no discernible patterns were revealed. All but one wet BOF shop are located east of the

Mississippi River and are concentrated in the steelmaking areas of Alabama, Illinois, Indiana, Michigan, Ohio, Pennsylvania, and West Virgina. The remaining BOF shop, a semi-wet system, is located in Colorado. The open hearth furnace shops are located in Ohio, Texas, Utah, and Maryland. Wet electric arc furnace shops are located in Pennsylvania, Texas, Michigan, Illinois, and California, while semi-wet shops are located in Ohio, Michigan, and Texas.

With regard to the consumptive use of water in "arid" and "semi-arid" regions, the geographic location of those steelmaking shops with wet gas cleaning systems is of no consequence since the model treatment system components would consume essentially no water. Therefore, the geographic location of a steelmaking shop does not require further segmentation of the steelmaking subdivisions.

Process Water Usage

Process water usage was a significant factor in establishing the segments of the steelmaking subdivisions. As noted previously in this section, the Agency found significant differences among and within the types of gas cleaning systems in use. The differences in process water flow support the segments developed previously in this section. However, in reviewing the process water usage data, the Agency concluded that further segmentation beyond those already established is not appropriate.

Fundamentally Different Factors

The Agency believes that it is possible that the BPT effluent limitation of zero discharge may not be achievable at certain semi-wet steelmaking operations because of the design of existing air collection and conditioning systems at these plants. As noted earlier, water is applied to the furnace gases for in semi-wet air cleaning systems three purposes: (1) to reduce the gas temperature to the range of 400°F to 500°F; (2) to achieve moisture levels of about 12% for those systems including baghouses, and in the range of 30 to 35% for those systems including electrotatic precipitators; and (3) to minimize deposition of particulate matter on the ductwork conveying the gases from the furnace to the air cleaning systems.

Water is usually applied in these systems through spray nozzles with openings of 1 1/2 to 2 inches in diameter. However, at some plants, atomizer type nozzles with smaller openings (1/4 to 3/8 inches) are used. The potential for fouling and plugging the smaller nozzles may preclude the continued reuse of partially treated water as provided for in the BPT model treatment system.

The deposition problem has been addressed at some plants by providing a "wetted wall" to flush the deposited material, thus adding to the volume of contaminated water leaving the process. This flow can be eliminated through the use of indirect cooling panels on the ductwork. Indirect cooling has the effect of minimizing deposition. Where, because of physical limitations, indirect cooling systems cannot be

installed, an additional volume of contaminated wastewater must be treated and disposed.

Finally, at a few systems, adequate gas cooling may not be achieved if the volume of water applied is restricted to the amount consumed in the process. For these operations, additional water application is necessary to protect downstream gas cleaning equipment from excessive gas temperatures.

In the Agency's opinion, the excess wastewater volume caused by any of the problems noted above could be treated, cooled, and recycled to permit the attainment of zero discharge or a minimal discharge. However, if the excess wastewater volume is significantly higher than that included in the Agency's model treatment system, the costs of the treatment systems required could be substantially in excess of the costs of the Agency's model treatment systems which include a dragout tank (or flight conveyor), and a recycle system. For these reasons. the Agency believes that the above factors may be cited as "fundamentally different factors" and, where appropriate, alternate effluent limitations should be developed for such operations. The alternate limitations should be based upon the best flow achievable at the plant in question and the concentrations used to develop the BPT and BAT effluent limitations for the wet steelmaking operations.

TABLE IV-1

EXAMPLES OF PLANTS WHICH HAVE DEMONSTRATED THE ABILITY TO RETROFIT POLLUTION CONTROL EQUIPMENT BASIC OXYGEN FURNACE SUBDIVISION

Plant Code	Furnace Age 1st Year of Production	Treatment Equipment and Year Installed
0112B	1964	CL-1970
0248A	1968	VF-1973
0396D	1959	PSP,FLP, CL,VF-1970
0432C	1961	CL, etc.(central treatment)- 1964, 1971
0584C	1968	(Central Treatment) CLB,FDSP, Dechlorination - 1977
0724A	1962	CL,FLP-1972
0860B	1965	CL-1974 SS,SL-1970

TABLE IV-2

EXAMPLES OF PLANTS WHICH HAVE DEMONSTRATED
THE ABILITY TO RETROFIT POLLUTION CONTROL EQUIPMENT
OPEN HEARTH FURNACE SUBDIVISION

Plant Code	Furnace Age 1st Year of Production	Treatment Equipment and Year Installed
0060	1952	CL,NC-1970 FLP,NL,CL-1978
0112A	1957-1958	T-1971
0492A	1953	NL,CL-1972
0864A	1944	FLP,FLL,CL,T-1962 CL-1969 CL-1976
0948C	1952-1953	Scr,T-1967

TABLE IV-3

EXAMPLES OF PLANTS WHICH HAVE DEMONSTRATED THE ABILITY TO RETROFIT POLLUTION CONTROL EQUIPMENT ELECTRIC ARC FURNACE SUBDIVISION

Plant Code	Furnace Age 1st Year of Production	Treatment Equipment and Year Installed
0060D	1969	CR-1977
0060F	1951	Classifier, CL, VF-1963
0432C	1959	CL,etc.(Central Treatment)-1964,1971
0528A	1949	CL,etc.(Central Treatment)-1954

FIGURE IV-1

EFFLUENT FLOW vs PLANT SIZE (PRODUCTION CAPACITY)
STEELMAKING SUBCATEGORY
BASIC OXYGEN FURNACE: SEMI-WET

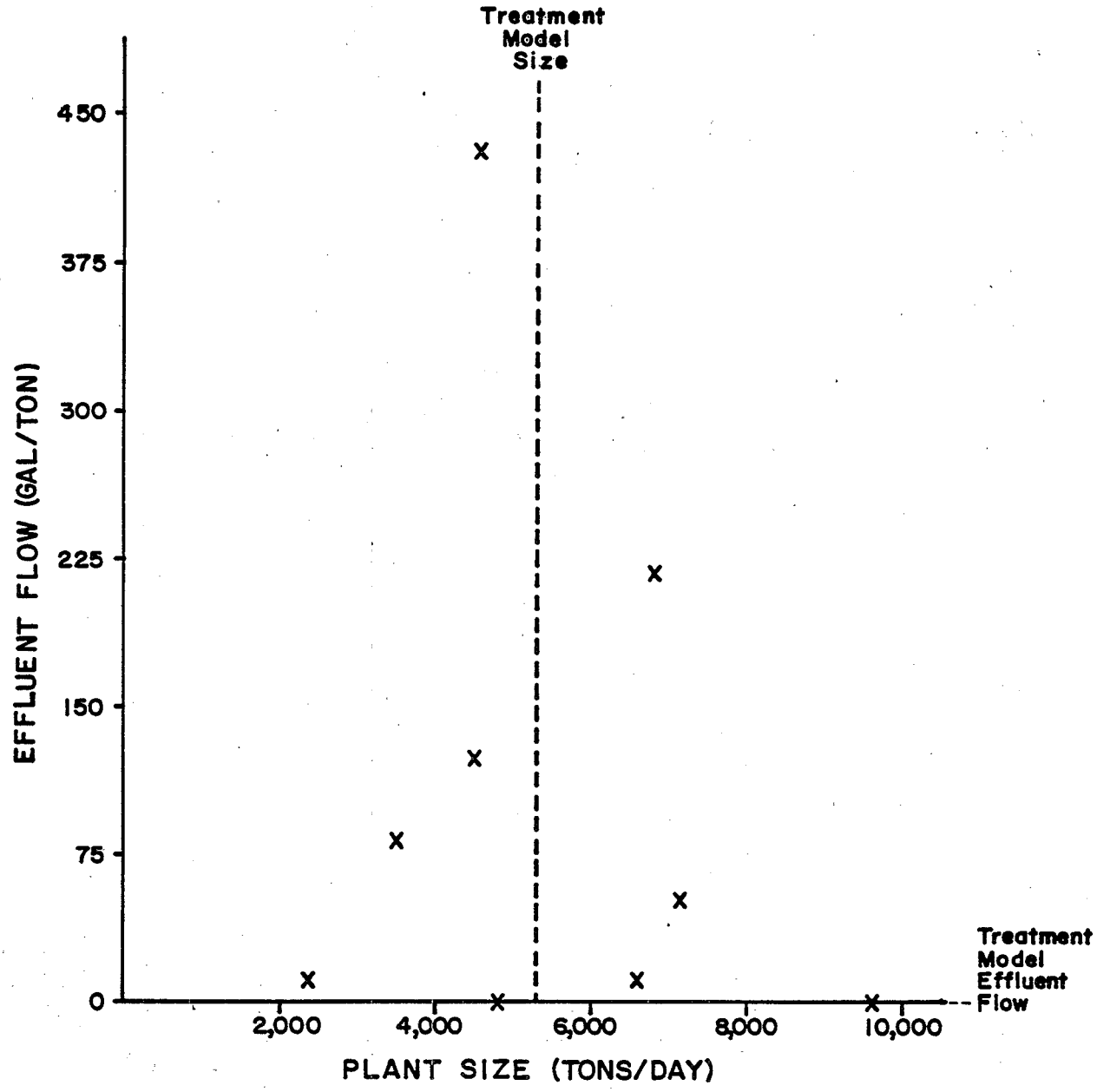

FIGURE IV-2

EFFLUENT FLOW vs PLANT SIZE (PRODUCTION CAPACITY)
STEELMAKING SUBCATEGORY
BASIC OXYGEN FURNACE: WET - SUPPRESSED COMBUSTION

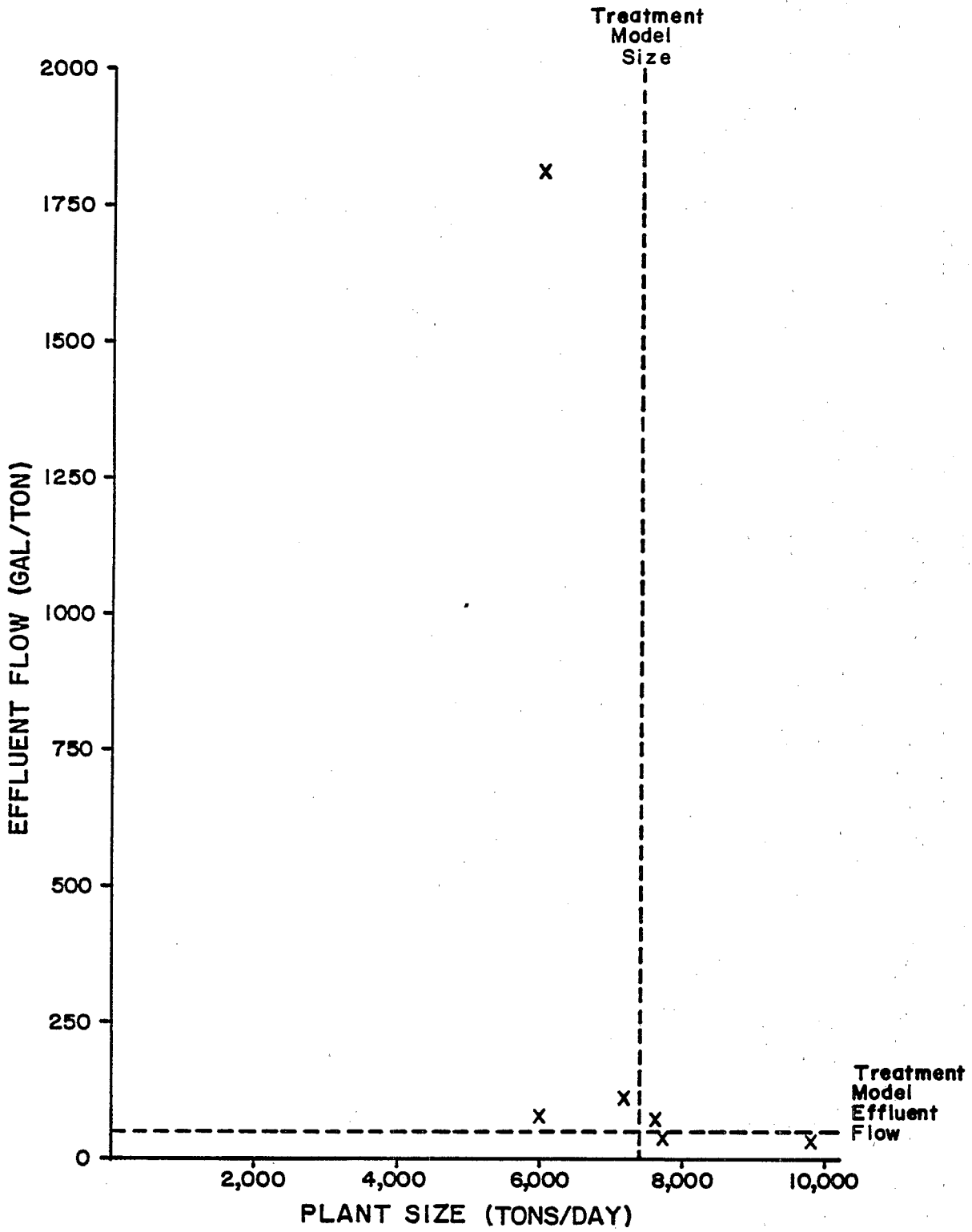

FIGURE IV-3

EFFLUENT FLOW vs PLANT SIZE (PRODUCTION CAPACITY)
STEELMAKING SUBCATEGORY
BASIC OXYGEN FURNACE: WET-OPEN COMBUSTION

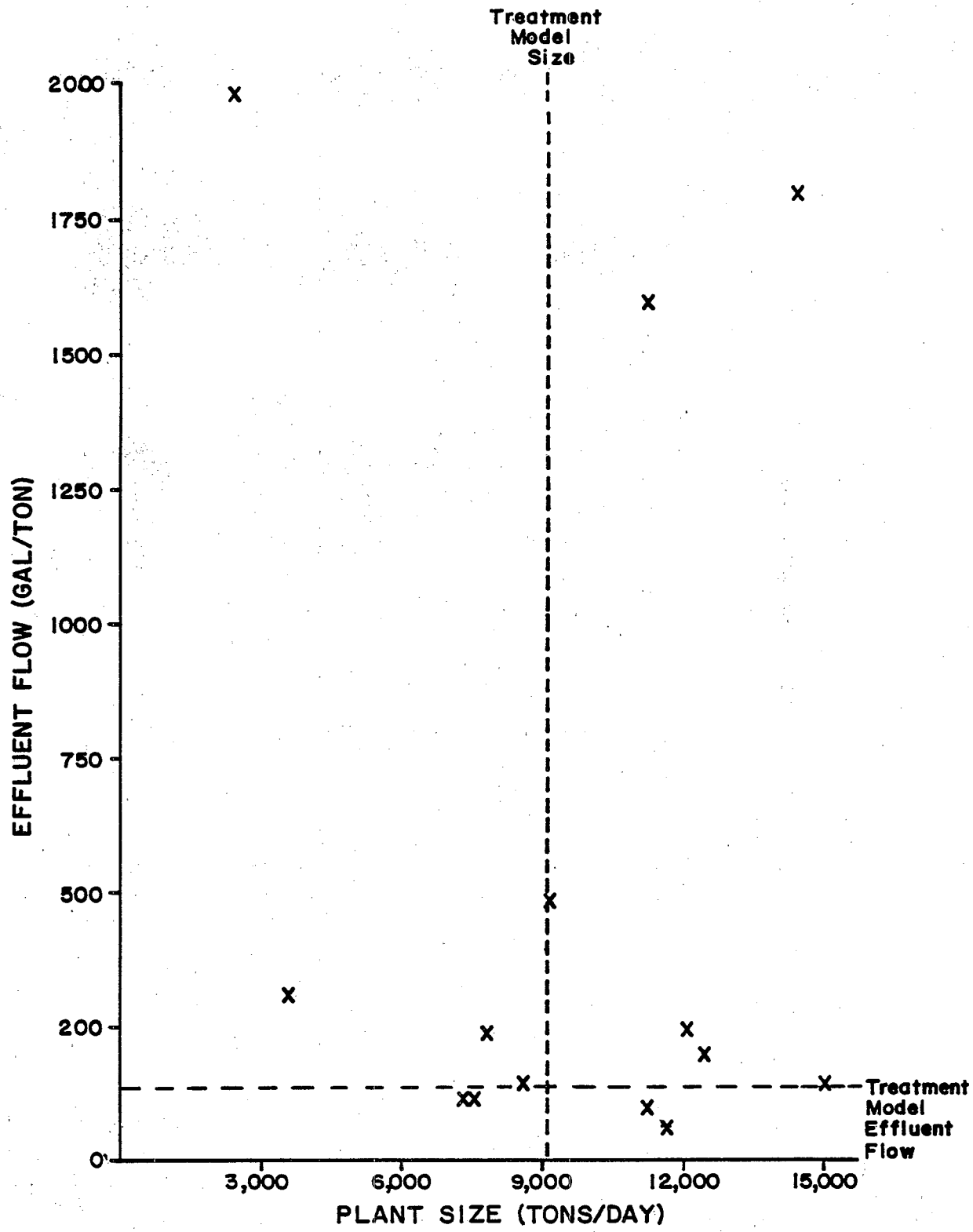

FIGURE IV-4

EFFLUENT FLOW vs PLANT SIZE (PRODUCTION CAPACITY)
STEELMAKING SUBCATEGORY
OPEN HEARTH FURNACE: WET

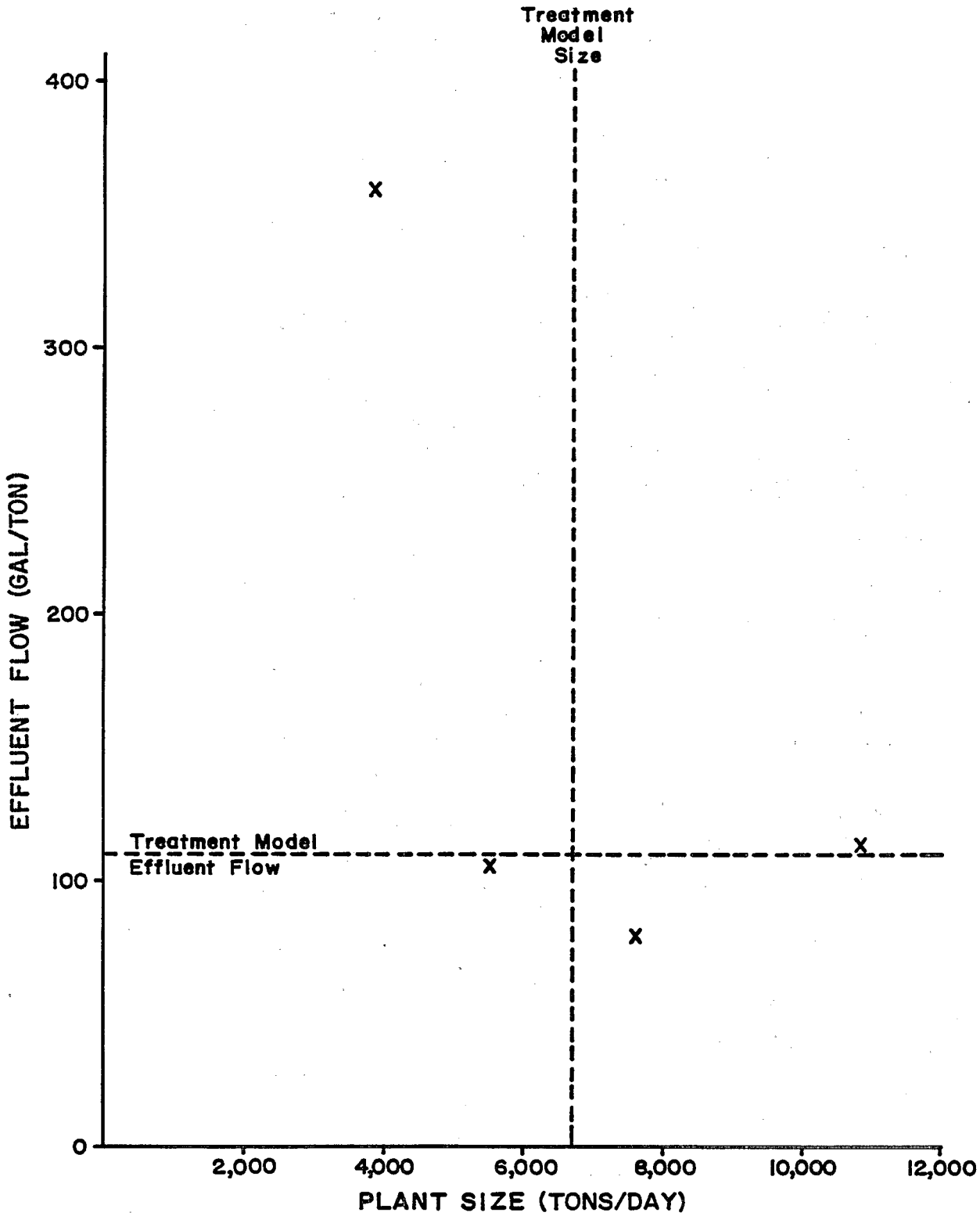

FIGURE IV-5

EFFLUENT FLOW vs PLANT SIZE (PRODUCTION CAPACITY)
STEELMAKING SUBCATEGORY
ELECTRIC ARC FURNACE: SEMI-WET

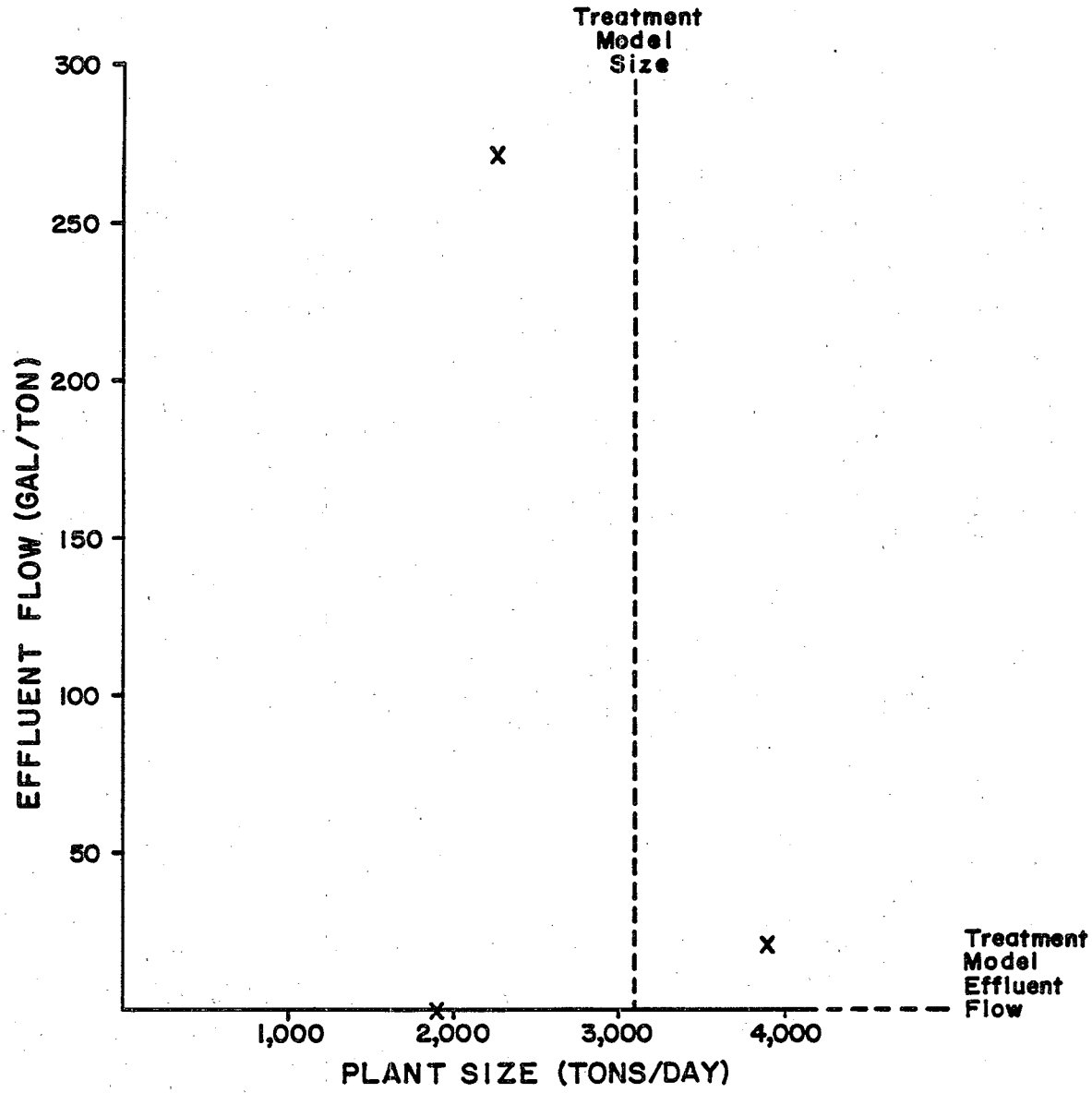

FIGURE IV-6

EFFLUENT FLOW vs PLANT SIZE (PRODUCTION CAPACITY)
STEELMAKING SUBCATEGORY
ELECTRIC ARC FURNACE: WET

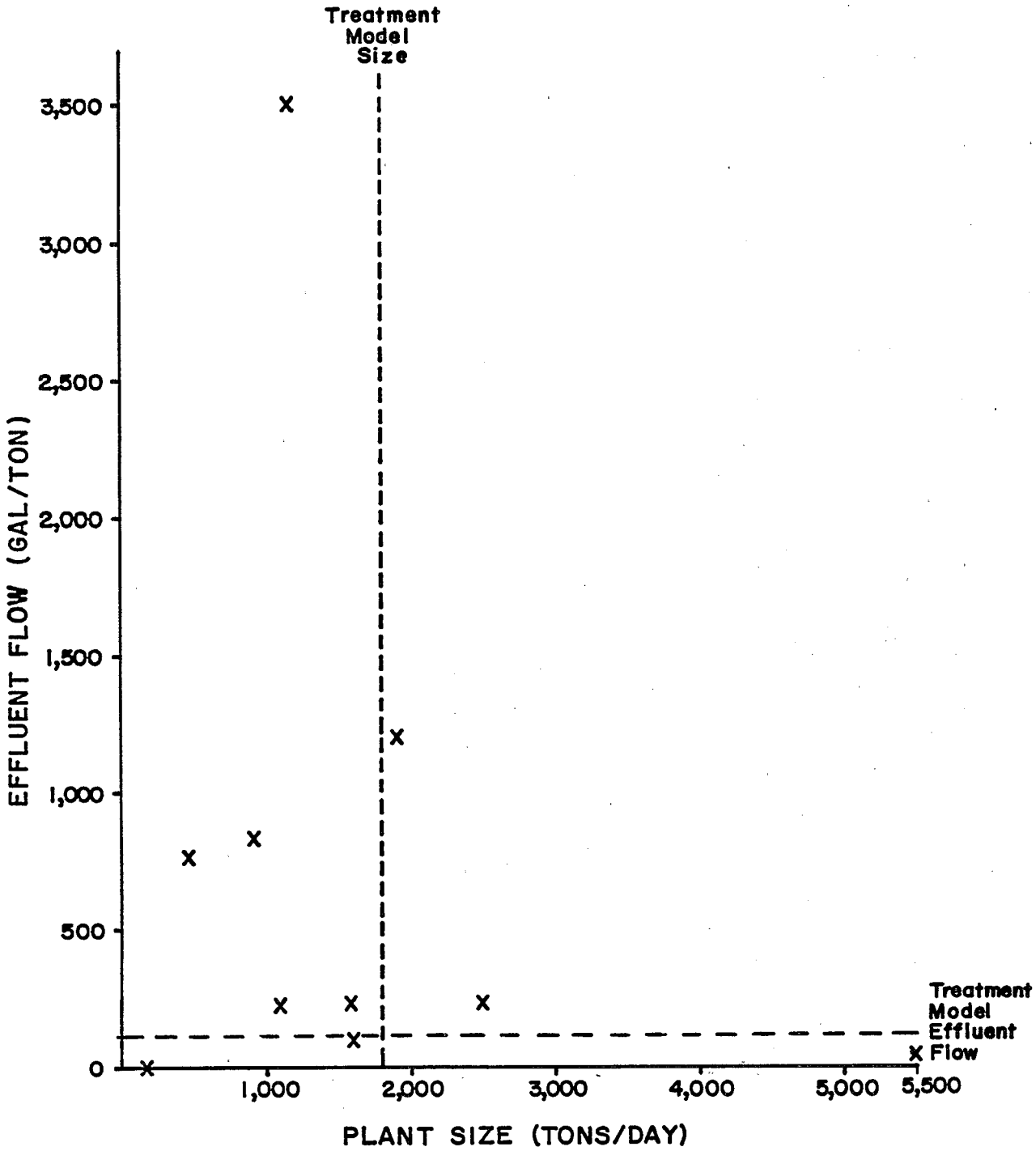

FIGURE IV-7

EFFLUENT FLOW vs PLANT AGE
STEELMAKING SUBCATEGORY
BASIC OXYGEN FURNACE: SEMI-WET

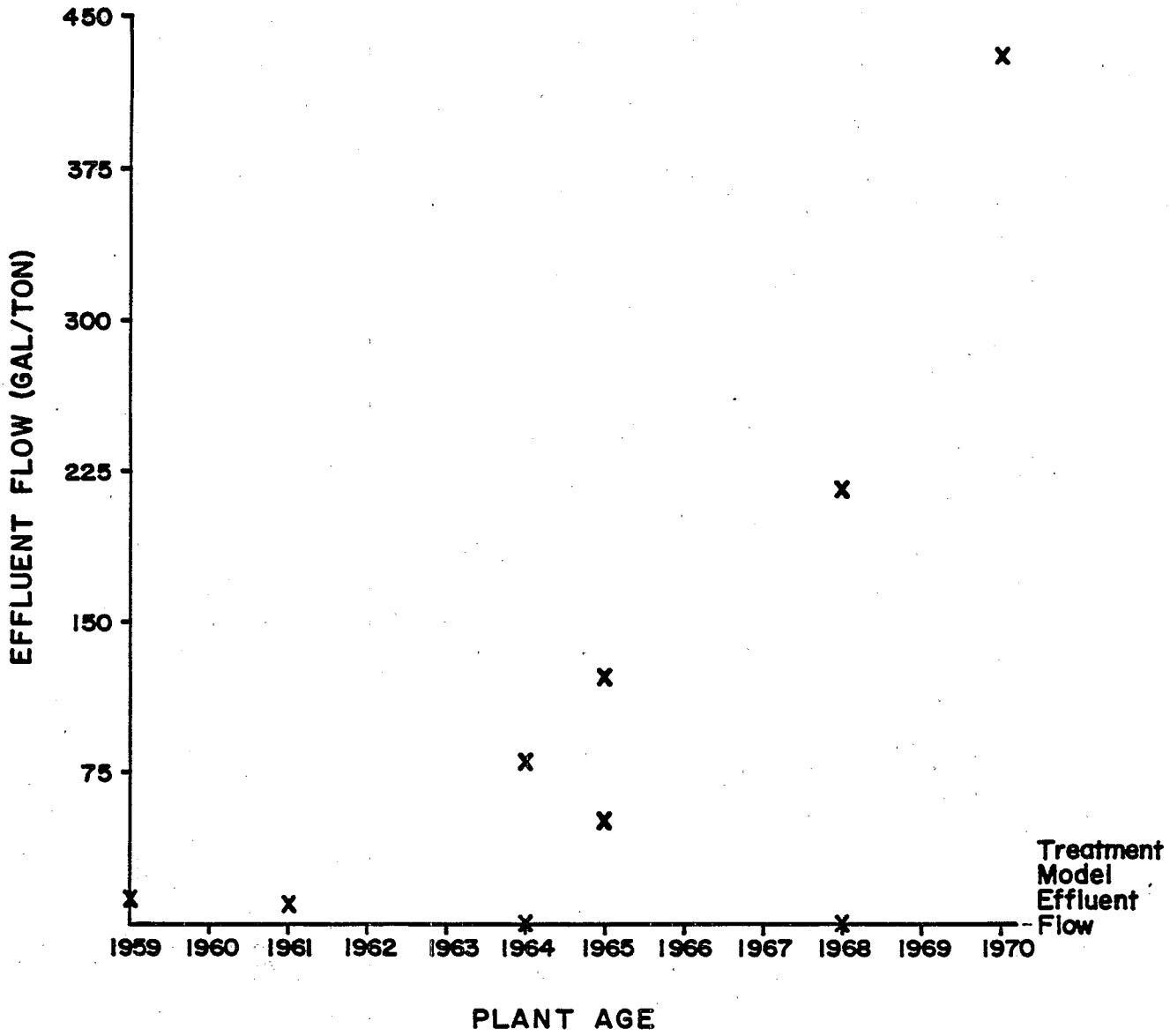

FIGURE IV-8

EFFLUENT FLOW vs PLANT AGE
STEELMAKING SUBCATEGORY
BASIC OXYGEN FURNACE: WET-SUPPRESSED COMBUSTION

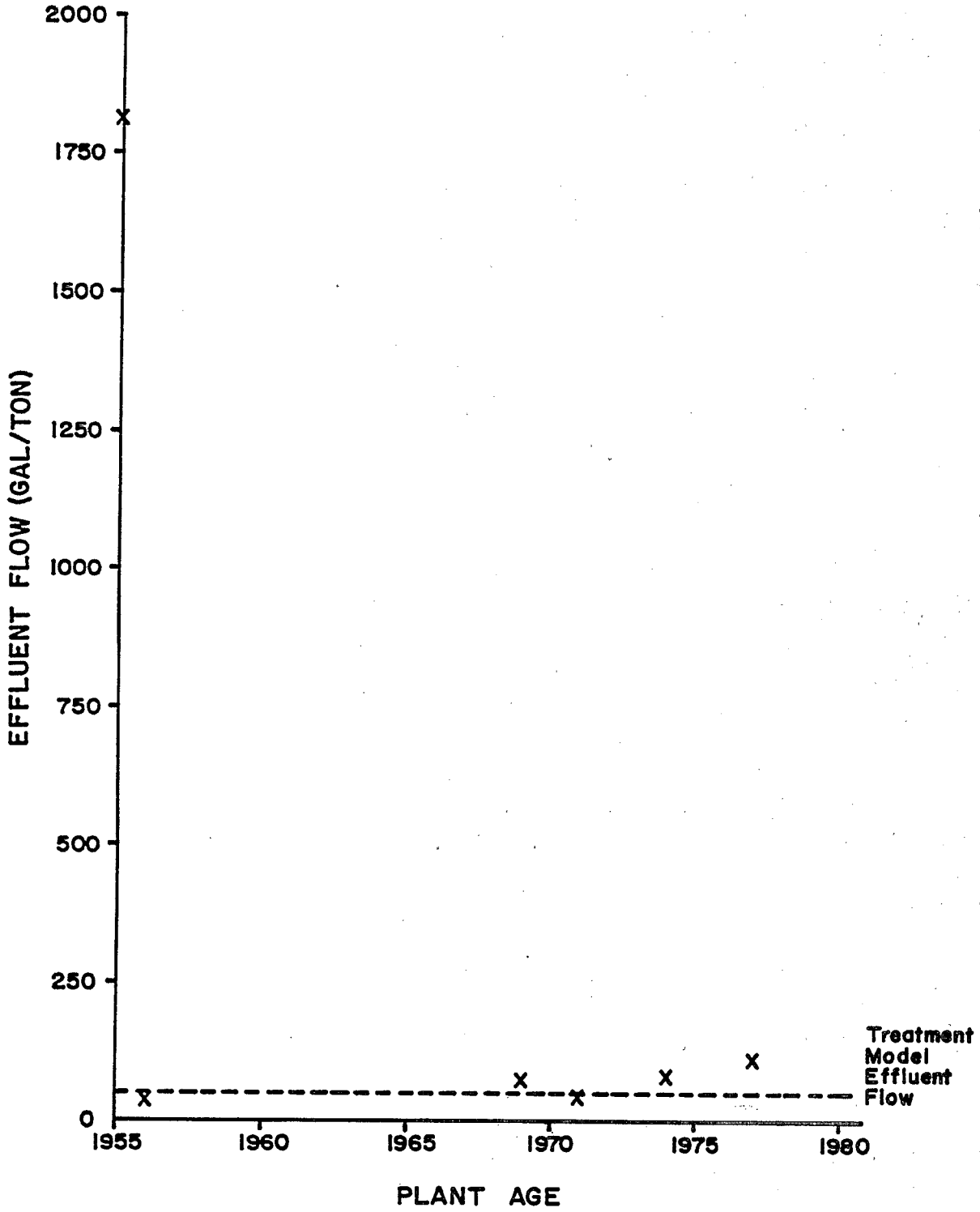

FIGURE IV-9

EFFLUENT FLOW vs PLANT AGE
STEELMAKING SUBCATEGORY
BASIC OXYGEN FURNACE: WET-OPEN COMBUSTION

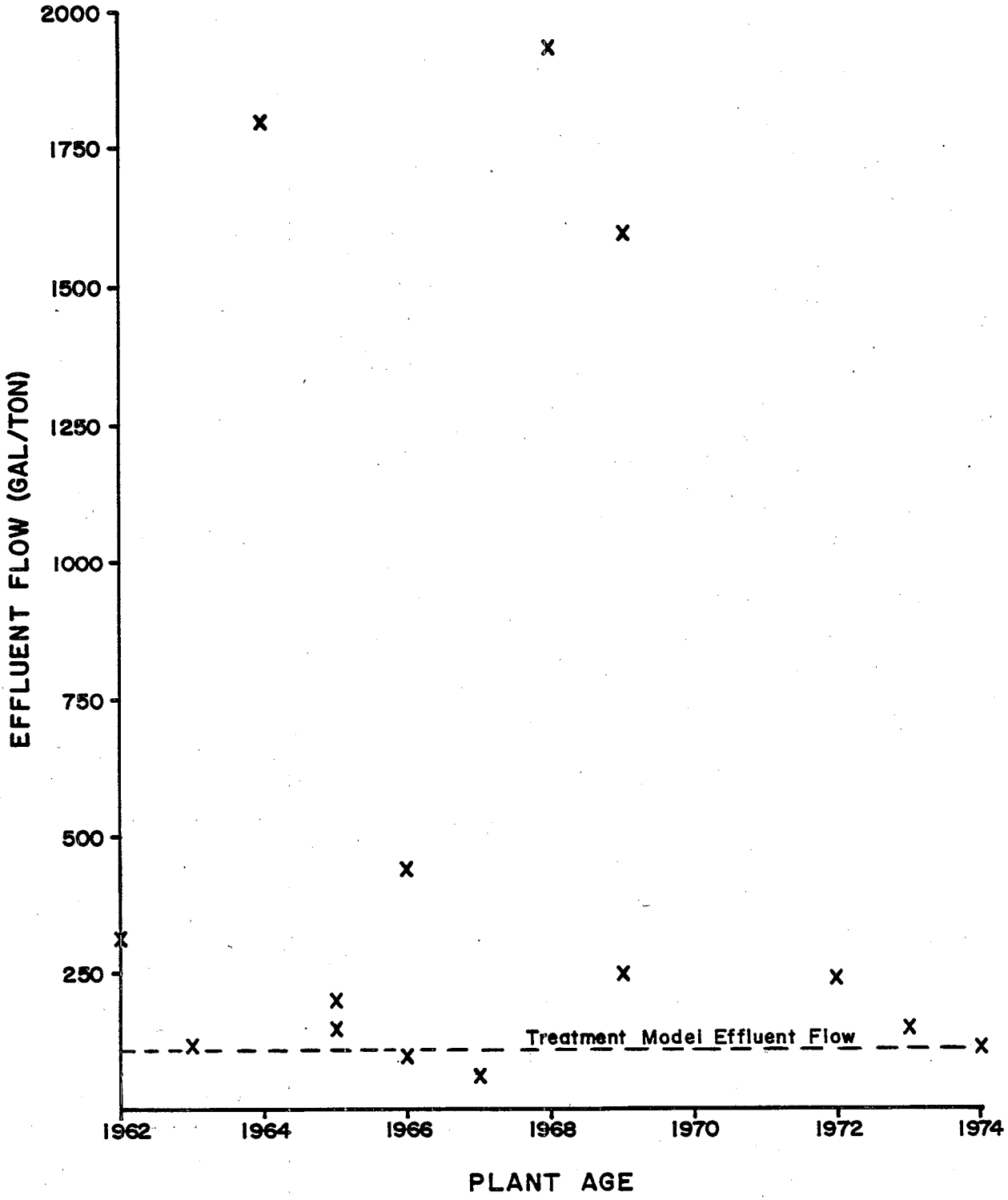

FIGURE IV-10

EFFLUENT FLOW vs PLANT AGE
STEELMAKING SUBCATEGORY
OPEN HEARTH FURNACE: WET

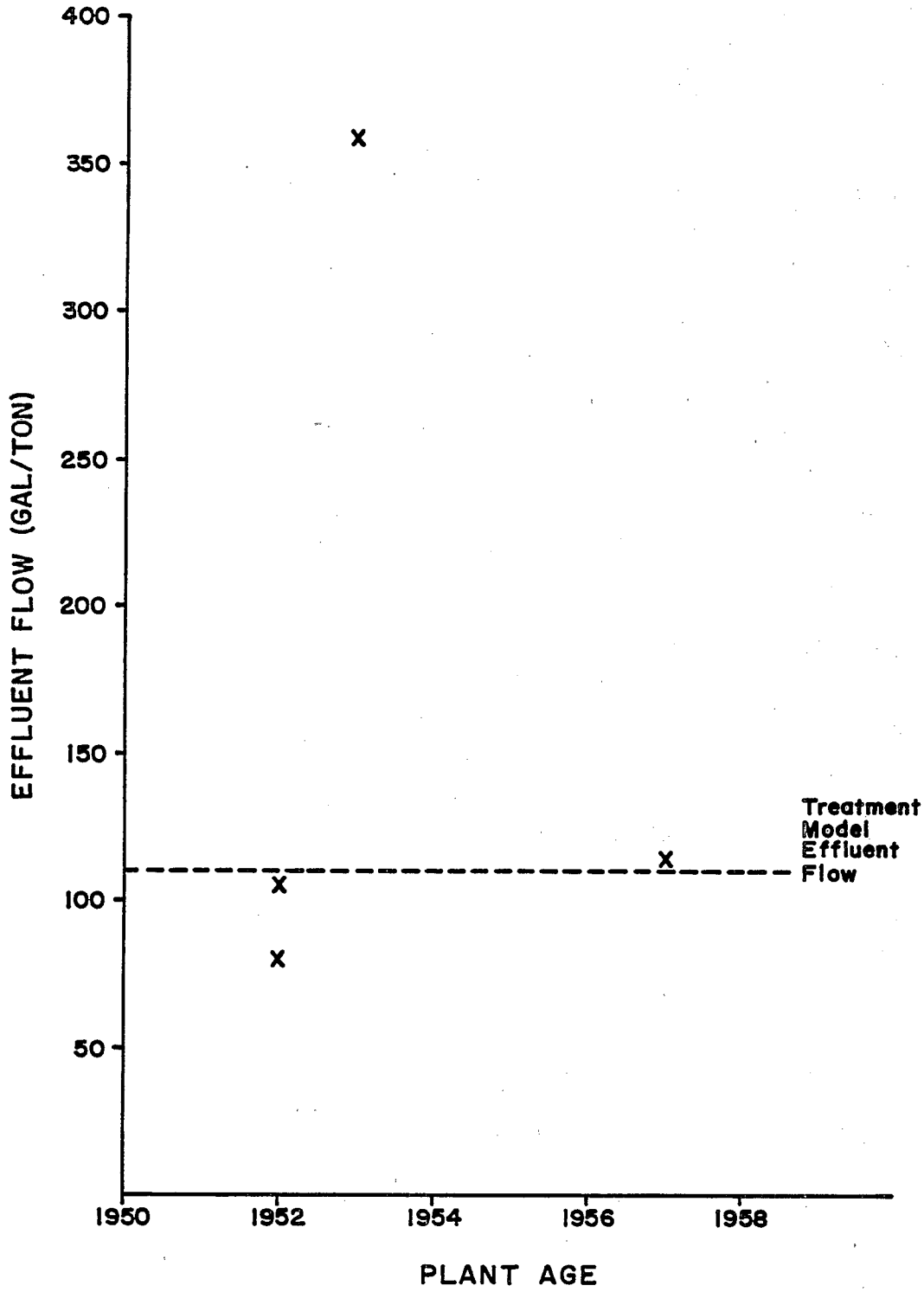

FIGURE IV-11

EFFLUENT FLOW vs PLANT AGE
STEELMAKING SUBCATEGORY
ELECTRIC ARC FURNACE: SEMI-WET

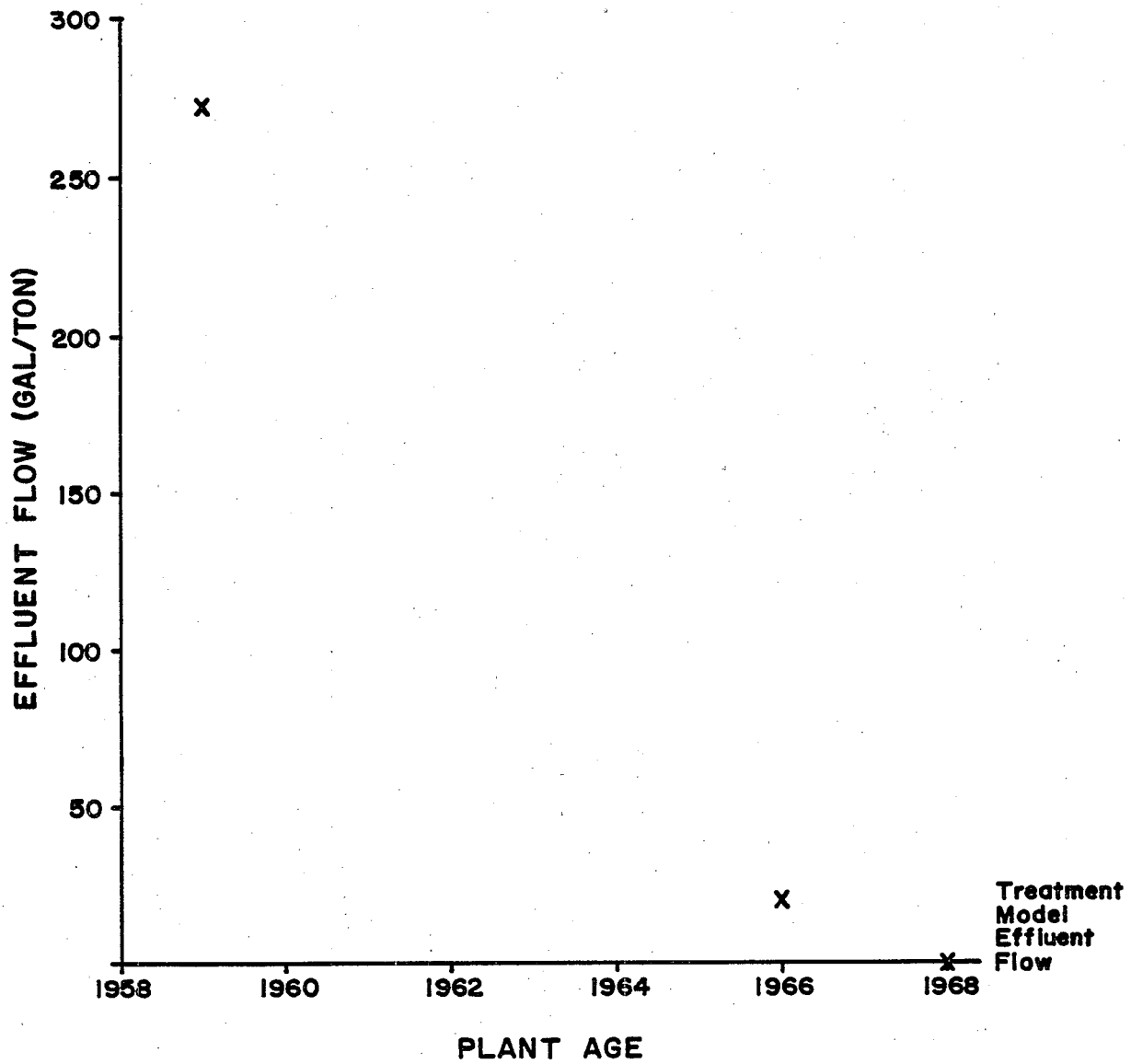

FIGURE IV-12

EFFLUENT FLOW vs PLANT AGE
STEELMAKING SUBCATEGORY
ELECTRIC ARC FURNACE: WET

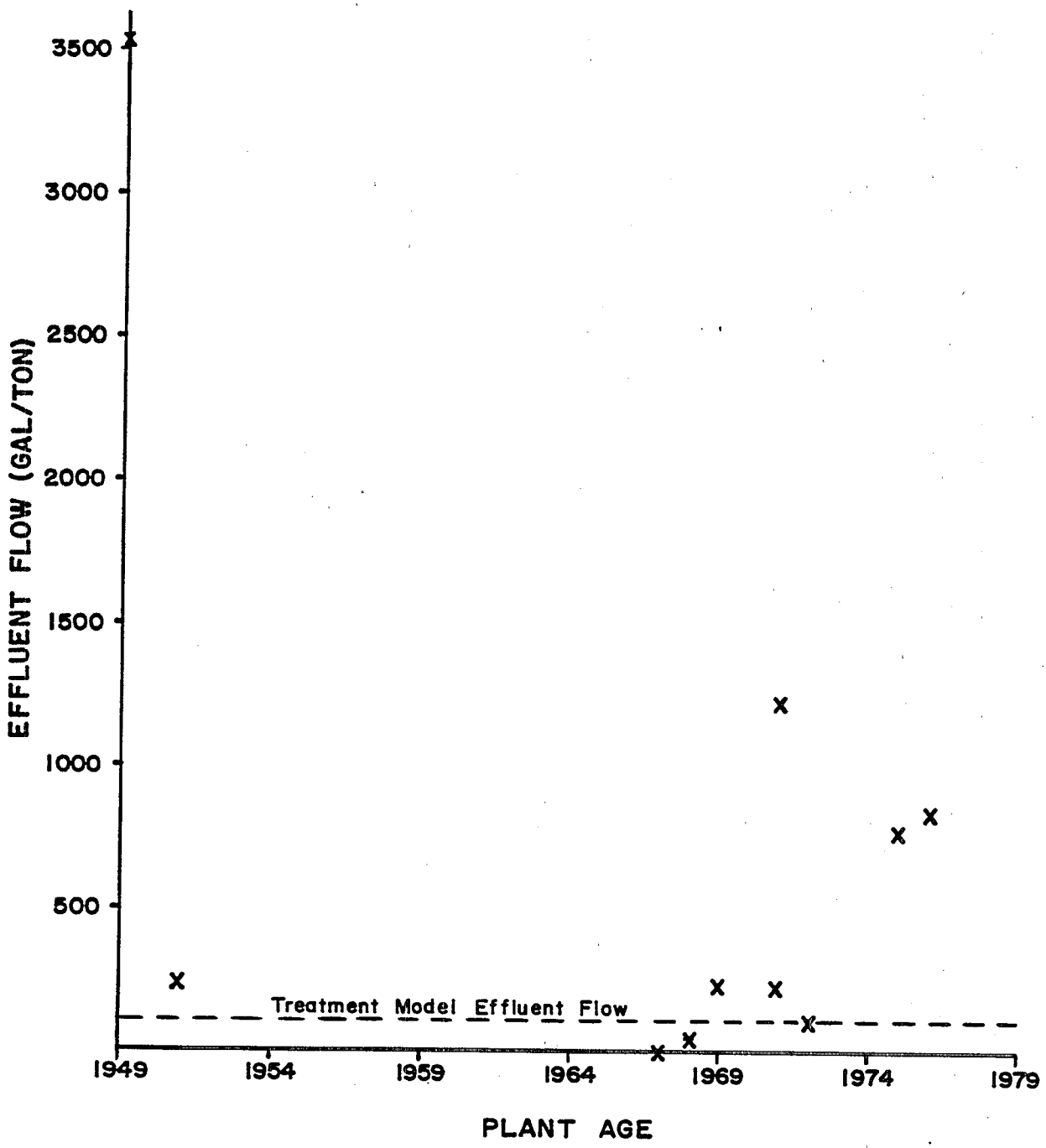

STEELMAKING SUBCATEGORY

SECTION V

WATER USE AND WASTEWATER CHARACTERIZATION

Introduction

This section describes the wastewaters generated in each steelmakng process and the wastewater treatment systems used to treat these wastewaters. The description of the wastewaters is limited to gas cleaning wastewaters. The various noncontact cooling and nonprocess water systems are not considered in this review. Wastewater characterization for the steelmaking processes is based upon EPA survey data and data supplied by the industry.

Water Use

The steelmaking processes generate fumes, smoke, and waste gases as impurities are burned off and various elements in the molten steel are vaporized. The wastewaters are generated when semi-wet or wet gas collection systems are used to condition and clean the furnace off-gases. The particulate matter carried by the gas stream is the prinicpal source of pollutants which contaminate the process wastewaters.

The four main water systems used in BOF steelmaking operations are:

a. Oxygen lance cooling
b. Furnace trunnion ring and nose cone cooling
c. Hood cooling
d. Fume collection scrubber and gas cooling

Open hearth furnace operations have two main water systems:

a. Furnace cooling; checker reversal valve cooling
b. Fume collection scrubber and gas cooling

Electric arc furnace operations have two main water systems:

a. Electric arc furnace door, electrode ring, roof ring, cable and transformer cooling.
b. Fume collection scrubber and gas cooling

Recycle of process wastewaters is a common practice in both the semi-wet and wet gas cleaning systems. In semi-wet operations, process wastewaters are recycled to the spark box, while in the wet systems, treated wastewater is recirculated to the scrubber and often cascaded to the quencher. Most steelmaking operations use recycle to some degree, as shown in Tables V-1 through V-3. These data show that several plants recycle more than ninety percent of their process

effluents. The use of recycle is considered to be good water conservation practice as it not only reduces the volume of fresh water needed by the gas cleaning system, but it also reduces the volume of wastewater discharged.

Wastewater Characterization

The raw wastewaters from the semi-wet and wet gas cleaning systems of each steelmaking subdivision are similar in waste characterization in that toxic metals, fluoride, and significant quantities of suspended solids are present. The levels of the various pollutants, however, vary among the systems. Toxic metals are found in process wastewaters as a result of the volatilization of the metals from the molten steel. The presence of zinc is directly related to the use of galvanized scrap in the furnace charge. Fluoride concentrations vary in relation to the amount of fluorspar (a fluxing compound) used in the process. The use of different fuels for firing open hearth furnaces results in the generation of nitrous and sulfur oxides, which subsequently depress the pH of open hearth furnace wastewaters. The generation of particulate matter has been previously discussed in Sections III and IV.

Tables V-4 through V-12 summarize the concentration data for wastewater pollutants picked up in each pass through the respective steelmaking processes. These values provide a measure of the pollutants contributed by the process. These concentration values were determined by subtracting out "background" pollutant concentrations.

As noted in Table V-11, raw wastewater samples could not be obtained for Plant Z, as this plant (Plant 0584A) has a closed system and is inaccessible to sampling. Data for the one semi-wet EAF operation sampled during the toxic pollutant survey (Plant 059B) are not presented as there are insufficient data to properly evaluate the net calculation. Data for EAF Plants AA and AB, sampled during the original guidelines survey, are not presented. Plant AA was resampled as Plant 059A the data of which appear in Table V-12. The toxic pollutant survey data were given precedence as they are more complete and representative of current operations. Plant AB was not included because the plant configuration precluded the collection of representative raw wastewater samples. The pollutants presented in these tables (other than the previously limited pollutants) were selected on the basis of their presence in the raw wastewaters at net concentrations of 0.010 mg/l or more.

After reviewing the net and gross concentration values of those pollutants considered for limitation in the steelmaking subcategories, the Agency determined that the effect of makeup water on these streams is not significant. Consequently, the effluent limitations and standards are based upon gross values. Additional information on the effect of make-up water quality are presented in Section VII.

TABLE V-1

RECYCLE RATES
BASIC OXYGEN FURNACES

Semi-Wet

Plant Reference Code	% Recycle
0196A	0
0396D	90.5
0432A	100
0432C	0
0584C	0
0684B	0
0684G	0
0684I	0
0920B	NA
0946A	93.7

Wet-Suppressed Combustion

0060	96.0
0384A	94.0
0528A	NA
0684F	94.2
0684H	90.0
0856N	96.9

Wet-Open Combustion

0020B	71.9
0112A	66.8
0112B	0
0112D	46.3
0248A	NA
0384A	89.1
0584F	75.2
0724A	80.0
0856B	NA
0856R	90.9
0860B	84.4
0860B	88.4
0860H	18.0
0868A	89.2
0920N	34.4

TABLE V-2

RECYCLE RATES
OPEN HEARTH FURNACES

Plant Reference Code	% Recycle
0060	97.6
0112A	87.5
0492A	29.1
0864A	93.8

TABLE V-3

RECYCLE RATES
ELECTRIC ARC FURNACE

	Plant Reference Code	% Recycle
Semi-wet	0060F	0
	0432C	0(1)
	0584A	(2)
Wet	0060D	72.0
	0060F	89.7
	0492A	29.0
	0528A	0
	0612	98.1
	0856F	95.0
	0860H	67.0(3)
	0860H	48.0(3)
	0868B	91.1
	0940	(2)

(1) Process water is completely reused.
(2) All waters are evaporated. Only wet sludges are removed from the process.
(3) Remaining percentage is reused.

TABLE V-4

SUMMARY OF ANALYTICAL DATA FROM SAMPLED PLANTS
ORIGINAL GUIDELINES SURVEY
STEELMAKING SUBCATEGORY
BASIC OXYGEN FURNACE - SEMI-WET

Pick-up per pass concentrations (mg/l) of pollutants in raw wastewaters.

Reference Code	0432A	0396D	Average
Plant Code	R	U	
Sample Points	1-2	1-4	
Flow, gal/ton	130	728	429
	mg/l	mg/l	mg/l
pH (Units)	11.1-11.3	11.8	11.4-11.8
Fluoride	NA	2.4	2.4
Suspended Solids	197	396	297
119 Chromium	-	NA	0.0
120 Copper	0.03	0.02	0.02
122 Lead	1.26	0.5	0.88
123 Mercury	0.0029	-	0.0015
128 Zinc	0.68	1.05	0.86

NA: No Analysis Performed
- : Calculation results in a negative value. Negative values were considered as zeroes in the determination of the averages.

TABLE V-5

SUMMARY OF ANALYTICAL DATA FROM SAMPLED PLANTS
ORIGINAL GUIDELINES SURVEY
STEELMAKING SUBCATEGORY
BASIC OXYGEN FURNACE - WET-SUPPRESSED COMBUSTION

Pick-up per pass concentrations (mg/l) of pollutants in raw wastewaters.

	Reference Code	0060
	Plant Code	S
	Sample Points	1-2
	Flow, gal/ton	982
		mg/l
	pH (Units)	8.8
	Fluoride	NA
	Suspended Solids	337
120	Copper	0.09
122	Lead	3.40
123	Mercury	0.0004
128	Zinc	15.8

NA: No Analysis Performed

TABLE V-6

SUMMARY OF ANALYTICAL DATA FROM SAMPLED PLANTS
TOXIC POLLUTANT SURVEY
STEELMAKING SUBCATEGORY
BASIC OXYGEN FURNACE - WET-SUPPRESSED COMBUSTION

Pick-up per pass concentrations (mg/l) of pollutants in raw wastewaters.

	Reference Code	0384A	0856N	0684F	Averages
	Plant Code	032	034	038	
	Sample Points	B+C+D-G	B-C-A	B-C-E	
	Flows, (gal/ton)	1470	1150	569	1060
		mg/l	mg/l	mg/l	mg/l
	pH (Units)	6.6-9.9	9.2-9.5	9.9-12.3	6.6-12.3
	Fluoride	NA	NA	NA	NA
	Suspended Solids	1450	333	645	809
4	Benzene	-	0.000	0.000	0.000
22	Parachlorometa cresol	0.000	ND	0.000	0.000
23	Chloroform	-	-	-	0.000
39	Fluoranthene	0.006	ND	0.005	0.004
65	Phenol	0.000	ND	0.008	0.003
84	Pyrene	0.003	ND	0.000	0.001
114	Antimony	NA	0.004	NA	0.004
117	Beryllium	0.000	0.000	0.000	0.000
118	Cadmium	0.091	0.000	0.024	0.038
119	Chromium	1.05	0.000	0.167	0.406
120	Copper	0.311	0.028	0.073	0.137
121	Cyanide	0.001	-	-	0.000
122	Lead	26.5	0.737	0.233	9.16
123	Mercury	-	0.0003	-	0.0001
124	Nickel	0.335	0.165	0.032	0.177
125	Selenium	NA	-	NA	0.000
126	Silver	0.026	0.000	0.016	0.014
128	Zinc	8.33	0.601	1.11	3.35

- : Calculation results in a negative value. Negative values were considered as zeroes in the determination of the averages.
NA: No Analysis Performed
ND: Not Detected

TABLE V-7

SUMMARY OF ANALYTICAL DATA FROM SAMPLED PLANTS
ORIGINAL GUIDELINES SURVEY
STEELMAKING SUBCATEGORY
BASIC OXYGEN FURNACE - WET-OPEN COMBUSTION

Pick-up per pass concentrations (mg/l)of pollutants in raw wastewaters.

Reference Code	0112A	0584F	Average
Plant Code	T	V	
Sample Points	1-2-4	5-6-7	
Flow, (gal,ton)	633	259	446
	mg/l	mg/l	mg/l
pH (Units)	Evaluation	3.4	3.4
Fluoride	Cannot Be	13.2	13.2
Suspended Solids	Completed	5338	5338
	Due To A		
120 Copper	Lack of	0.410	0.410
122 Lead	Data	9.8	9.8
123 Mercury		0.0005	0.005
128 Zinc		193	193

TABLE V-8

SUMMARY OF ANALYTICAL DATA FROM SAMPLED PLANTS
TOXIC POLLUTANT SURVEY
STEELMAKING SUBCATEGORY
BASIC OXYGEN FURNACE - WET-OPEN COMBUSTION

Pick-up per pass concentrations (mg/1) of pollutants in raw process wastewaters.

Reference Code		0020B	0856B	0868A	0112D	Averages
Plant Code		031	033	035	036	
Sample Points		B-A	C-A	L-A-M	O-Q	
Flow, (gal/ton)		1058	241	1046	454	700
		mg/1	mg/1	mg/1	mg/1	mg/1
pH (Units)		7.6-8.7	11.6-11.9	7.8-9.3	10.4-11.8	7.6-11.9
Fluoride		NA	NA	NA	8.6	8.6
Suspended Solids		367	7669	877	7087	4000
4	Benzene	0.003	0.000	0.000	-	0.001
10	1,2-Trans dichloroethane	ND	ND	0.000	0.000	0.000
23	Chloroform	0.032	-	0.041	-	0.018
39	Fluoranthene	ND	0.034	-	ND	0.008
73	Benzo(a)pyrene	0.000	0.000	0.007	ND	0.002
76	Chrysene	0.000	0.029	0.005	ND	0.007
84	Pyrene	ND	0.032	-	ND	0.008
114	Antimony	0.020	0.002	NA	NA	0.011
115	Arsenic	0.050	0.069	NA	NA	0.060
117	Beryllium	NA	0.000	0.000	ISD	0.000
118	Cadmium	0.090	1.8	0.020	ISD	0.637
119	Chromium	17.2	-	0.021	ISD	5.74
120	Copper	1.21	0.863	0.018	ISD	0.697
121	Cyanide	-	-	0.002	ISD	0.001
122	Lead	1.42	13.1	0.039	ISD	4.85
123	Mercury	0.033	0.000	0.0002	ISD	0.0111
124	Nickel	1.00	0.371	0.000	ISD	0.457
125	Selenium	0.006	0.030	NA	NA	0.018
126	Silver	0.160	0.118	0.000	ISD	0.093
127	Thallium	-	-	NA	NA	0.000
128	Zinc	3.28	48.4	3.16	ISD	18.3

NA: Not Analysis Performed
- : Calculation results in a negative value. Negative values were considered as zeroes in the determination of the averages.
ND: Not Detected
ISD: Insufficient Data to complete evaluation

TABLE V-9

SUMMARY OF ANALYTICAL DATA FROM SAMPLED PLANTS
ORIGINAL GUIDELINES SURVEY
STEELMAKING SUBCATEGORY
OPEN HEARTH FURNACE - WET

Pick-up per pass concentrations (mg/l) of pollutants in raw wastewater.

Reference Code	0112A	0060	Average
Plant Code	W	X	
Sample Points	1-2-4 (Plant T)	1-2-4	
Flow, gal/ton	607	500	578
	mg/l	mg/l	mg/l
pH (Units)	2.1-3.4	6.1-6.3	2.1-6.3
Fluoride	21.9	23.8	22.8
Suspended Solids	-	4237	2118
120 Copper	-	4.20	2.10
122 Lead	0.093	-	0.046
123 Mercury	0.0009	0.0006	0.0008
128 Zinc	2.52	1188	595

-: Calculation results in a negative value. Negative values were considered as zeroes in the determination of the averages.

TABLE V-10

SUMMARY OF ANALYTICAL DATA FROM SAMPLED PLANTS
TOXIC POLLUTANT SURVEY
STEELMAKING SUBCATEGORY
OPEN HEARTH FURNACE - WET

Pick-up per pass concentrations (mg/l) of pollutants in raw wastewaters.

Reference Code		0492A[1]	0864A	Average
Plant Code		042	043	
Sample Points		C-A-D	B-C	
Flow, gal/ton		506	1163	
		mg/l	mg/l	mg/l
pH (Units)		6.6-6.8	2.3-2.6	2.3-6.8
Fluoride		91	222	156
Suspended Solids		1507	480	994
4	Benzene	0.000	-	0.000
23	Chloroform	-	0.013	0.006
86	Toluene	0.000	0.000	0.000
118	Cadmium	0.972	-	0.486
119	Chromium	0.010	0.080	0.045
120	Copper	0.593	0.070	0.332
121	Cyanides	-	0.036	0.018
122	Lead	7.56	0.167	3.86
124	Nickel	0.005	0.051	0.028
128	Zinc	389	0.466	195

-: Calculation results in a negative value. Negative values were considered as zeroes in the determination of the averages.

(1) The toxic metals data (except for zinc) for this plant are presented as dissolved concentrations.

TABLE V-11

SUMMARY OF ANALYTICAL DATA FROM SAMPLED PLANTS
ORIGINAL GUIDELINES SURVEY
STEELMAKING SUBCATEGORY
ELECTRIC ARC FURNACE - SEMI-WET

Pick-up per pass concentrations (mg/l) of pollutants in raw wastewaters.

Reference Code	0432C	0584A	Average
Plant Code	Y	Z	
Sample Points	1 - 2	-	
Flow, Gal/Ton	97	-	97
pH (Units)	7.5-8.0	*	7.5-8.0
Fluoride	-	*	0
Suspended Solids	862	*	862
120 Copper	0.382	*	0.382
122 Lead	15.2	*	15.2
128 Zinc	13.6	*	13.6

* : No samples of the raw or treated wastewaters could be obtained during the survey. This plant utilizes a closed system and is inaccessible to sampling. The only sample obtained was of the sludge leaving the system.

- : Calculation results in a negative value. Negative vales were considered as zeroes in the determination of the averages.

TABLE V-12

SUMMARY OF ANALTYICAL DATA FROM SAMPLED PLANTS
TOXIC POLLUTANT SURVEY
STEELMAKING SUBCATEGORY
ELECTRIC ARC FURNACE - WET

Pick-up per pass concentrations (mg/l) of pollutants in raw wastewaters.

Reference Code	0612[1]	0492A[1]	0060F[1]	Average
Plant Code	051	052	059A	
Sample Points	B-E-D	B-A-D	F-G-I	
Flow, Gal/Ton	720	1178	2300	1399
pH (Units)	7.1-7.2	8.4-9.6	6.6-7.5	7.6-9.6
Fluoride	NA	21	25	23
Suspended Solids	2755	874	6266	3298
4 Benzene	-	0.000	0.016	0.005
24 2-Chlorophenol	0.000	ND	0.016	0.005
39 Fluoranthene	0.000	ND	0.050	0.017
58 4-Nitrophenol	0.000	ND	0.031	0.010
64 Pentachlorophenol	0.000	ND	0.033	0.011
84 Pyrene	0.000	ND	0.044	0.015
114 Antimony	0.665	NA	NA	0.665
115 Arsenic	1.22	NA	NA	1.22
118 Cadmium	1.80	0.000	0.129	0.643
119 Chromium	3.74	0.000	0.535	1.425
120 Copper	1.25	0.033	-	0.428
122 Lead	21.8	0.013	0.000	7.27
123 Mercury	0.0009	-	0.008	0.0030
124 Nickel	0.043	0.000	0.000	0.014
126 Silver	0.063	0.000	0.000	0.021
128 Zinc	155	25.7	35.8	72.2

NA: No Analysis Performed
- : Calculation results in a negative value. Negative values were considered as zeroes in the determination of the averages.
ND: Not Detected

(1) The toxic metals data (except for zinc) are presented as dissolved concentrations.

STEELMAKING SUBCATEGORY

SECTION VI

WASTEWATER POLLUTANTS

Introduction

This section describes the selection, rationale for selection, and process sources of those pollutants characteristic of wastewaters from the various steelmaking processes. The initial task was to develop a list, based upon data obtained from the DCP responses and during the original guidelines survey, of pollutants considered to be representative of each steelmaking process. This initial list was then confirmed and augmented with monitoring data obtained during the toxic pollutant survey. The final selection of pollutants for each steelmaking operation was based upon a review of all monitoring data, a consideration of each pollutant's impact, and a pollutant's ability to serve as an indicator of wastewater contamination and treatment performance.

Conventional Pollutants

The originally promulgated BPT limitations for the steelmaking subdivisions contained limitations for suspended solids and pH. The Agency established limitations for suspended solids based upon the substantial quantities of particulates generated in the steelmaking processes and contained in the process off-gases. As water is used to condition and clean these gases, the particulates are transferred to the process waters. Suspended solids concentrations provide an indication of the degree to which the process wastewaters are contaminated and of wastewater treatment performance. The removal of suspended solids will also result in the removal of certain toxic metals which are entrained in the suspended solids.

The Agency selected pH for limitation because of the detrimental environmental impacts which can result from extremes in the pH of a wastewater discharge. In addition, extremes in pH can cause corrosion or failure of the process and wastewater treatment equipment and facilities. Basic oxygen furnace raw wastewater pH values are typically in the alkaline range due to the composition of the furnace gases. Open hearth raw wastewaters are typically acidic primarily because of the scrubbing of sulfur oxides, which are found in the gases as a result of the various fuels which are used to fire the furnace. The pH of electric arc furnace raw wastewaters is typically in the neutral range.

Nonconventional, Nontoxic Pollutants

The presence of fluoride in steelmaking process wastewaters is related to the use of fluorspar in the steelmaking process. Although not

included in the list of toxic pollutants, fluoride has exhibited effects which are detrimental to the environment. Fluoride is typically present in only moderate amounts in BOF raw wastewaters. However, substantial amounts of fluoride can be found in open hearth and EAF raw wastewaters since the use of fluorspar is related to the amount of scrap used in the furnace charge.

Toxic Pollutants

This study also considered the discharge of toxic pollutants. Initially, the Agency developed a list of pollutants "known to be present" in steelmaking wastewaters based upon industry responses to the DCPs, analyses performed during the screening phase of the project, and knowledge of the character of steelmaking process wastewaters. Tables VI-1 through VI-3 present lists of these pollutants for each steelmaking subcategory.

Upon completion of the monitoring of steelmaking operations, the Agency tabulated the data and calculated a net concentration value for each pollutant detected in raw wastewaters at 0.010 mg/l or greater. "Pick-up per pass" raw concentrations were used for the reasons noted in Section V. Those pollutants found at average net concentrations of less than 0.010 mg/l were excluded from further consideration. The Agency then developed lists of selected pollutants, including the conventional and nonconventional pollutants, for the steelmaking subdivisions. The final lists of selected pollutants are presented in Tables VI-4 through VI-6.

The toxic metal pollutants originate in the raw materials (primarily the scrap) charged to the steelmaking furnaces. Subsequently, these metals contaminate process wastewaters from the scrubbing of furnace off-gases. In all subcategories, zinc is the predominant toxic metal found in the process wastewaters. Raw wastewater zinc levels can increase with higher charging rates of galvanized steel scrap.

Although the Agency found a number of toxic organic pollutants in steelmaking wastewaters, Tables VI-4 through VI-6 do not include these pollutants. The Agency did not include phthalates because their presence is ascribed to sampling and laboratory procedures. The remaining organic pollutants (primarily in EAF operations) may originate with the scrap charge to the furnaces and were included in the pollutant list. In addition to the organic pollutants found on the scrap steel as a result of machining and handling, solvents used at some plants to clean the scrap steel can also be a source of toxic organic pollutants. However, the Agency has not promulgated limitations for these pollutants. The Agency believes that these pollutants do not tend to concentrate in recycle systems. Although the concentration in recycle system blowdowns will be approximately the same as in once-through systems, the mass loadings of those pollutants to the environment will be reduced proportionately to the degree of recycle. Accordingly, the Agency believes that compliance with the BAT limitations indicates a comparable reduction in the

discharge of the toxic organic pollutants present in steelmaking wastewaters.

Other pollutants (i.e., chloride, sulfate) are present at substantial levels in the process wastewaters, but are not included in the list of selected pollutants since they are nontoxic in nature and difficult to remove. Treatment of these pollutants is not commonly practiced in the wastewater treatment operations of any industry.

TABLE VI-1

TOXIC POLLUTANTS KNOWN TO BE PRESENT
BASIC OXYGEN FURNACE

4. Benzene
23. Chloroform
65. Phenol
85. Tetrachloroethylene
86. Toluene
115. Arsenic
118. Cadmium
119. Chromium
120. Copper
121. Cyanide
122. Lead
123. Mercury
124. Nickel
125. Selenium
126. Silver
127. Thallium
128. Zinc

TABLE VI-2

TOXIC POLLUTANTS KNOWN TO BE PRESENT
OPEN HEARTH FURNACE

65. Phenol
114. Antimony
115. Arsenic
118. Cadmium
119. Chromium
120. Copper
121. Cyanide
122. Lead
123. Mercury
124. Nickel
128. Zinc

TABLE VI-3

TOXIC POLLUTANTS KNOWN TO BE PRESENT
ELECTRIC ARC FURNACE

4. Benzene
39. Fluoranthene
48. 4-Nitrophenol
64. Pentachlorophenol
84. Pyrene
114. Antimony
115. Arsenic
118. Cadmium
119. Chromium
120. Copper
122. Lead
124. Nickel
126. Silver
128. Zinc

TABLE VI-4

SELECTED POLLUTANTS
BASIC OXYGEN FURNACE SUBDIVISON

Semi-Wet		Wet-Suppressed Combustion		Wet-Open Combustion	
	pH		pH		pH
	Fluoride		Fluoride		Fluoride
	Suspended Solids		Suspended Solids		Suspended Solids
120	Copper	118	Cadmium	23	Chloroform
122	Lead	119	Chromium	115	Arsenic
123	Mercury	120	Copper	118	Cadmium
128	Zinc	122	Lead	119	Chromium
		124	Nickel	120	Copper
		126	Silver	122	Lead
		128	Zinc	123	Mercury
				124	Nickel
				125	Selenium
				126	Silver
				127	Thallium
				128	Zinc

TABLE VI-5

SELECTED POLLUTANTS
OPEN HEARTH FURNACE SUBDIVISION

	Wet
	pH
	Fluoride
	Suspended Solids
120	Copper
122	Lead
128	Zinc

TABLE VI-6

SELECTED POLLUTANTS
ELECTRIC ARC FURNACE SUBDIVISION

Semi-Wet		Wet	
	pH		pH
	Fluoride		Fluoride
	Suspended Solids		Suspended Solids
120	Copper	39	Fluoranthene
122	Lead	58	4-Nitrophenol
128	Zinc	64	Pentachlorophenol
		114	Antimony
		115	Arsenic
		118	Cadmium
		119	Chromium
		120	Copper
		122	Lead
		124	Nickel
		126	Silver
		128	Zinc

STEELMAKING SUBCATEGORY

SECTION VII

CONTROL AND TREATMENT TECHNOLOGY

Introduction

A review of the control and treatment technologies in use or available for use in the steelmaking subcategory provided the basis for the selection and development of the model BPT and the BAT, NSPS, PSES, and PSNS alternative treatment systems. This review involved summarizing the DCP and plant visit data to identify those wastewater treatment components and systems in use at the various steelmaking operations.

This section also presents raw wastewater and treated effluent monitoring data for the plants sampled, as well as long-term effluent monitoring data provided in the D-DCPs. Also included are treatment facility descriptions of each sampled plant and a review of the impact of make-up water quality on raw waste loadings.

Summary of Treatment Practices Currently Employed

A survey of the treatment components used within the steelmaking subcategory indicates that all of the plants use gravity sedimentation as an initial treatment step. Most plants also have recycle systems following sedimentation. Wastewaters from several steelmaking operations are treated in central (i.e., multi-waste source) treatment facilities.

Referring to Tables III-5 through III-10, the following treatment technologies have been noted as in use at many steelmaking operations.

A. Dragout Tanks

Some semi-wet systems use dragout tanks to remove heavy suspended solids.

B. Neutralization with Lime

In the case of open hearth furnace operations, lime is added to the typically acidic process wastewaters for the purpose of adjusting the pH to the neutral range (6.0 to 9.0).

C. Thickener

Sedimentation components are used in all steelmaking segments to remove the substantial amounts of particulate matter generated in the process and transported by the process wastewaters.

D. Coagulant Aid Addition

Coagulant aids (i.e., polymeric flocculants) are added to the process wastewaters in all of the steelmaking subdivisions to enhance suspended solids removal.

E. Vacuum Filter

Vacuum filters are used in all of the subdivisions to dewater the sludges removed from the sedimentation components. By dewatering the substantial quantities of solids which are removed from the process wastewaters, the cost of sludge handling and disposal is reduced.

F. Recycle

In the semi-wet air pollution control system segments, the entire effluent from the dragout tank is recycled to the process. However, in the wet air pollution control system segments, most of the clarified effluent is recycled. The remainder of the effluent is discharged in the wet segments. Makeup water is added to replace water lost through evaporation in the gas cleaning system, as moisture in the dewatered solids, and as blowdown.

G. Neutralization with Acid

In the case of the BOF wet air pollution control system segments, acid is added to the recycle system blowdown to adjust the pH of the typically alkaline wastewaters to the neutral pH range (6.0 to 9.0).

The above components have been included in the BPT model treatment systems on the basis of their widespread use in the steelmaking subcategory.

Control and Treatment
Technologies for BAT, NSPS, PSES, and PSNS

The presence of nonconventional and inorganic toxic pollutants in process wastewaters from steelmaking operations led the Agency to consider advanced levels of treatment for use in the BAT, NSPS, PSES, and PSNS treatment systems. Following is a brief discussion of each of the advanced treatment systems considered by the Agency.

Filtration is a common and effective means of removing suspended solids and those toxic metal pollutants entrained in the solids. A BOF (0584C) discharging to a central treatment facility has this technology in place. Filtration is well demonstrated in many other wastewater treatment applications in other subcategories. Generally, the filter bed is comprised of one or more filter media (e.g., sand, anthracite, garnet), while a variety of filtration systems are available (flat bed, deep bed, pressure, or gravity). The primary

reason for applying this technology to the treatment of steelmaking process wastewaters is the removal of toxic metals.

Significant reductions in fluoride levels are achieved with lime precipitation as a result of the formation of calcium fluoride precipitates. Lime addition also achieves additional toxic metals removals through the formation of metal hydroxide precipitates. Lime addition is demonstrated in the steelmaking subdivisions, elsewhere in this industry, and in other industries. An inclined plate separator is included to remove the suspended solids and precipitates added and formed as a result of lime addition. Inclined plate separators are gravity sedimentation devices with effective settling areas much larger than the actual equipment size. The number of mechanical components is also reduced with these devices. Inclined plate separators are installed to treat steelmaking wastewaters (Plant 0684F), elsewhere in this industry, and in other industries.

The data presented below are for the BPT recycle system blowdown at Plant 0612. These data were obtained during the Agency's pilot plant studies of alternative BAT treatment systems conducted at this plant. Both dissolved and total toxic metals data were obtained for six samples.

Total Toxic Metals Concentrations (mg/l)

	Minimum	Maximum	Average
Antimony	<0.5	1.1	0.83
Arsenic	<0.03	<0.03	<0.03
Cadmium	0.16	1.5	0.81
Chromium	0.31	2.9	1.3
Copper	0.1	1.5	0.42
Lead	1.0	2.6	1.8
Nickel	<0.05	0.15	0.10
Silver	<0.05	<0.05	<0.05
Zinc	5.8	23	14

Dissolved Toxic Metals Concentrations (mg/l)

	Minimum	Maximum	Average
Antimony	<0.5	1.0	0.56
Arsenic	<0.03	<0.03	<0.03
Cadmium	0.12	1.5	0.75
Chromium	0.22	2.8	1.1
Copper	0.01	0.05	0.03
Lead	0.07	0.94	0.34
Nickel	0.08	0.12	0.10
Silver	<0.05	<0.05	<0.05
Zinc	0.3	14	4

These data clearly show that a significant portion of the toxic metals in the BPT recycle system blowdown at this plant are in the form of dissolved metals.

Sulfide precipitation is another method used for the control of toxic metals in other industries. Some of the toxic metals which can effectively be precipitated with sulfide are zinc, copper, nickel, lead, and silver. High removal efficiencies are attributed to the comparative solubilities of metal sulfides and metal hydroxides. In general, the metal sulfides are less soluble than the respective metal hydroxides. However, an excess of sulfide in a treated effluent can result in objectionable odor problems. A decrease in wastewater pH will aggravate this problem, and if wastewater treatment pH control problems result in even a slightly acidic pH, operating personnel can be adversely affected. One method of controlling the presence of excess sulfide in treated effluents involves using an iron sulfide slurry as the sulfide source. Ferrous sulfide will not readily dissociate in the waste stream, with the result that free sulfide is kept well below objectionable concentrations. Because the affinities of other metals in the waste stream for sulfide are greater than that of iron, other metal sulfide precipitates are formed preferentially to iron sulfide. Once the sulfide requirements of the other metal precipitates are satisfied, the remaining sulfide remains as a ferrous precipitate and the excess iron from the sulfide is precipitated as a hydroxide. With the use of filtration following sulfide addition, additional toxic metal reductions can be achieved. However, because of the potential problems cited above, the absence of full-scale demonstration in this industry, and the limited additional improvement achievable, sulfide precipitation was not considered any further as a treatment alternative.

The Agency considered vapor compression distillation, in which a wastewater with a high dissolved solids content (the treatment system blowdown) is concentrated to a slurry consistency, as a possible means of attaining zero discharge in the steelmaking subcategory. The resulting slurry would be dried by various means while the distillate quality effluent would be recycled to the process. While this technology is capital intensive and exhibits very high energy requirements, the Agency believes it is the only means of achieving zero discharge for wet steelmaking operations on an industry-wide basis.

Summary of Monitoring Data

Raw wastewater and effluent monitoring data for the basic oxygen furnace operations visited during the original and toxic pollutant surveys are presented in Tables VII-2 through VII-6. Similar data for the open hearth furnace and electric arc furnace operations are presented in Tables VII-7 and VII-8 and Tables VII-9 through VII-12, respectively. Plant AA, an electric arc furnace operation, was resampled as Plant 059A during the toxic pollutant survey. Table VII-1 presents the legend for the treatment technologies used in the above tables and in other tables throughout this report.

The concentrations presented in the above tables represent, except where footnoted, averages of measured values. In some cases, these data represent the values of central treatment systems. As indicated on the tables, the effluent waste loads (lb/1000 lb) for central treatment systems represent apportioned loads. The percentage contribution of an individual operation to the total central treatment system influent load was determined and subsequently applied to the total effluent load. This procedure was repeated for each pollutant. By using this procedure, an assessment was made of the effects of treatment on the waste loads of individual processes which discharge to central treatment facilities.

As a supplement to the sampled plant data, effluent data from plant D-DCP responses are presented in Tables VII-13 and VII-14 for the BOF operations, in Table VII-15 for open hearth operations, and in Table VII-16 for EAF operations. Tables VII-17 through VII-19 summarize the typical process wastewater characteristics for the various steelmaking processes as determined from the data noted above.

Plant Visits

Brief descriptions of the visited plants are presented below. Treatment system flow schematics are presented at the end of this section.

A. Basic Oxygen Furnace - Semi-wet

Plant R (0432A) - Figure VII-1

Process wastewaters undergo sedimentation with polymer addition in a dragout tank. All wastewaters are recycled to the process.

Plant U (0396D) - Figure VII-2

A thickener and polymer addition are used to treat BOF wastewaters. The overflow from the thickener is discharged directly to a river with the exception of a side stream which is used for slag quenching. The thickener underflow is dewatered with a vacuum filter and the filtrate is returned to the thickener influent.

B. Basic Oxygen Furnace - Wet-Suppressed Combustion

Plant S (0060) - Figure VII-3

This plant uses a classifier and thickener for primary and secondary suspended solids removal. The thickener underflow is dewatered using vacuum filtration. Ninety-five percent of the treated effluent is recycled while the remaining five percent is discharged.

Plant 032 (0384A) - Figure VII-4

Hydroclones and classifiers are used for primary solids removal. The effluent is then discharged to a thickener distribution box where it is mixed with the discharge from the secondary ventilation scrubbers. After pH adjustment the thickener overflow is recycled from a holding tank to the process. Seven percent of the thickener overflow is blowndown to a clarifier. The overflow from the clarifier is pumped to a central treatment facility and is subsequently discharged. The underflows from the thickeners and clarifier are discharged to sludge settling lagoons.

Plant 034 (0856N) - Figure VII-5

Wastewaters from both Venturi scrubbers are combined in a distribution box where polymer is added to facilitate suspended solids removal in a thickener. The thickener overflow is diverted to a holding tank from which 96% of the thickener effluent is recycled to the process. The blowdown from the holding tank is clarified prior to discharge. The clarifier underflow is returned to the thickener influent while the thickener underflow is discharged to sludge lagoons.

Plant 038 (0684F) - Figure VII-6

Wastewaters from the BOF quenchers are combined in a distribution box feeding two desiltors in which heavy solids are removed. The effluent from the desiltors is then discharged to two thickeners for secondary solids removal. Ninety-four percent of the thickener effluent is recycled to the system. The underflow from the thickeners is dewatered with vacuum filters while the filtrate is returned to the inlet of the thickeners. The blowdown from the recycle system undergoes chemical flocculation and precipitation (with lime) and then sedimentation in inclined plate separators. The effluent of the separators is discharged directly to the river while the underflow is returned to the thickeners.

C. Basic Oxygen Furnace - Wet-Open Combustion

Plant T (0112A) - Figure VII-7

A grizzly, a cyclone and a classifier are used in this plant to accomplish primary solids removal. The effluent from these primary solids removal steps flows to a thickener where further solids removal is provided. The underflow from the thickener is transferred to sludge disposal. The overflow from the thickener flows to a holding tank. Seventy-six percent of the thickener effluent is recycled and the balance discharged. Industrial water is used as makeup to this process.

Plant V (0584F) - Figure VII-8

A classifier and thickener are used in this plant for primary and secondary suspended solids removal. Chemical addition is used to aid in secondary suspended solids removal. The thickener overflow is collected in a clearwell from which 87% of the thickener effluent is recycled. The remaining thirteen percent is discharged to a sewer. The thickener underflow is dewatered by vacuum filtration and the filtrate is returned to the thickener influent.

Plant 031 (0020B) - Figure VII-9

Spray wastewaters flow to a settling tank where primary suspended solids removal occurs. The overflow from the settling tank discharges into a dirty water sump where it is combined with Venturi scrubber water. This wastewater is then combined with other plant wastewaters in an equalization tank prior to chemical addition (lime and polymer) and clarification. The clarifier effluent is pumped to a final polishing lagoon which discharges directly to the river. The clarifier underflow is dewatered using vacuum filters and the filtrate is returned to the clarifier influent.

Plant 033 (0856B) - Figure VII-10

The wastewaters from the scrubber are discharged to a classifier for the purpose of achieving primary suspended solids removal. A portion of the classifier effluent is recycled to the process while the remaining (thirty percent) effluent flows to a thickener for secondary suspended solids removal. The overflow from the thickener is discharged. The thickener underflow is discharged to centrifuges for dewatering and the centrate is returned to the thickener influent.

Plant 035 (0868A) - Figure VII-11

Wastewaters from the scrubbers and quenchers flow directly to a desiltor in which primary suspended solids removal is provided. The overflow from the desiltor is discharged to a clarifier for additional suspended solids removal. Ninety percent of the clarifier effluent is recycled with the balance discharged along with other plant wastewaters to a terminal treatment lagoon. The underflow from the clarifier is dewatered by vacuum filtration and the filtrate is returned to the clarifier inlet. Sludges from the desiltor and vacuum filter are further dewatered on sludge drying beds.

Plant 036 (0112D) - Figure VII-12

BOF wastewaters are transferred to cyclones for primary suspended solids removal. The concentrated solids from the cyclones are discharged to classifiers where further solids concentration

occurs. The overflow from the cyclones, combined with the effluent from the classifiers, make up the feed to two thickeners. The overflow from the thickeners flows to a holding tank and then to a recycle tank. Overflows from the holding tank and recycle tank account for a blowdown of about 54%. The underflow from the thickeners flows to two centrifuges, the effluents of which are also discharged.

D. Open Hearth Furnace

Plant 043 (0864A) - Figure VII-13

Each furnace has a spray chamber which is manifolded to a central precipitator gas cleaning system. A common wastewater treatment system serves all of the spray chambers. The major component in the wastewater treatment system is a thickener. The thickener overflow is recycled, while a 0.3% blowdown is discharged to a final polishing lagoon. The thickener underflow is conveyed to a sludge drying lagoon. The dry precipitator dust is slurried and removed from precipitator hoppers by pneumatic conveyors with water jet ejectors. This wastewater is discharged to another thickener. The thickener overflow is recycled to the water jet ejectors while the underflow is discharged to the settling lagoon.

Plant W (0112A) - Figure VII-14

This gas cleaning system is a central system with manifolded ductwork which serves all of the furnaces in the shop. The central gas cleaning system is a parallel design of dry precipitators and wet scrubbers. The dry precipitators were installed first on the system and the Venturi scrubbers were added later. Each system is designed to clean approximately one half of the total gas volume from the open hearth shop.

The scrubber discharges empty into primary separators. A portion of the separator effluent is pumped to a thickener for final sedimentation, while the remaining effluent is combined with the thickener overflow in a recycle tank and returned to the Venturi scrubbers. Nine percent of the thickener overflow is discharged to a receiving stream.

Plant X (0060) - Figure VII-15

This gas cleaning system is comprised of individual Venturi scrubbers for each open hearth furnace, although scrubber discharges are combined for treatment.

Wastewater treatment involves lime neutralization followed by sedimentation in a thickener. The thickener underflow is dewatered by vacuum filters and the filtrate is returned to the thickener inlet. Seventy-nine percent of the thickener overflow is recycled to the scrubbers. The remaining twenty-one percent

is discharged to the plant sewer or treated further in a deep bed filter.

Plant 042 (0492A) - Figure VII-16

This gas cleaning system is a manifolded system in which all furnaces are exhausted through common ductwork to three clusters of hydroscrubbers, with each cluster serving several furnaces through the manifolded ductwork. The principle of the hydroscrubber involves the use of steam or air and a water jet ejector for cleaning open hearth off-gases. Waste heat boilers furnish the steam for this process.

Wastewater treatment is provided in a joint system serving both the electric arc furnace shop and the open hearth shop. The wastewaters are neutralized, flocculated with polymers and then discharged to clarifiers where they undergo sedimentation. A portion of the clarifier overflow is recycled, while a 71% blowdown is discharged to final polishing lagoons. The clarifier underflow is dewatered by vacuum filters.

E. Electric Arc Furnace - Semi-wet

Plant Y (0432C) - Figure VII-17

The wastewater treatment system provides for the treatment of scrubber discharges in a dragout tank, to which polymer is added. The only effluent from this system is a sludge which is collected in a sludge basin and then hauled away. The overflow from the dragout tank is completely recycled to the process.

Plant Z (0584A) - Figure VII-18

This plant closely controls the water spray of its gas cleaning system to produce a sludge of sufficient solids concentration to allow direct solids disposal. Solids captured by the gas cleaning system collect in water sealed tanks with drag-link conveyors. There is no aqueous discharge from this system.

Plant 059B (0060F) - Figure VII-19

This treatment system uses a clarifier to provide sedimentation for process wastewaters. The clarifier effluent is either reused in other operations in this plant or discharged, while the underflow is dewatered with vacuum filters.

F. Electric Arc Furnace - Wet

Plant AB (0868B) - Figure VII-20

Wastewaters from the Venturi scrubbers and primary quenchers are collected in a recirculation sump. Ninety-five percent of the wastewater in the sump is recirculated back to the scrubbers and

quenchers. The remaining five percent flows to a thickener for sedimentation, and then to lagoons for final polishing prior to discharge. Vacuum filters dewater the sludge removed from the thickener.

Plant 051 (0612) - Figure VII-21

Sedimentation is provided in a thickener. Vacuum filters are used to dewater the thickener underflow while the filtrate is returned to the inlet of the thickener. More than ninety-eight percent of the overflow is recycled to the scrubbers while the remainder is reused in other plant operations.

Plant 052 (0492A) - Figure VII-22

Open hearth and electric arc furnace wastewaters are co-treated in a combined treatment system. Wastewaters from the EAF and open hearth shops discharge to a pump station which delivers the wastewaters to a flocculation and neutralization tank. Both lime and polymer are added prior to discharge to a clarifier. Vacuum filters dewater the clarifier underflow. Twenty-nine percent of the clarifier overflow is recycled back to the gas cleaning system, while the remaining seventy-one percent receives additional treatment in combined plant wastewater settling ponds.

Plant 059A (0060F) - Figure VII-23

Scrubber effluent wastewaters are discharged to conical bottom separator tanks. Most of the wastewater is recirculated to the scrubbers, while the remainder is discharged to clarifiers which provide further sedimentation. Approximately one half of the clarifier overflow is returned to the gas cleaning system while the other half is discharged to a settling pond.

Effect of Make-up Water Quality

Where the mass loading of a limited pollutant in the make-up water to a process is small in relation to the raw waste loading of that pollutant, the impact of make-up water quality on wastewater treatment system performance is not significant, and, in many cases, not measureable. In these instances, the Agency has determined that the respective effluent limitations and standards should be developed and applied on a gross basis.

Tables VII-20 through VII-25 present analyses of the impact of make-up water quality on raw waste loadings for BOF, open hearth, and EAF operations, respectively. These data demonstrate that make-up waters add less than four percent of the limited conventional and toxic metal pollutants found in the raw waste loadings. Thus, the Agency has determined that the limitations and standards for steelmaking operations should be applied on a gross basis, except to the extent provided by 40 CFR 122.63(h).

TABLE VII-1

OPERATING MODES, CONTROL AND TREATMENT TECHNOLOGIES AND DISPOSAL METHODS

Symbols

A. Operating Modes

1. OT — Once-Through

2. Rt,s,n — Recycle, where t = type waste
s = stream recycled
n = % recycled

t: U = Untreated
T = Treated

	s	n
P	Process Wastewater	% of raw waste flow
F	Flume Only	% of raw waste flow
S	Flume and Sprays	% of raw waste flow
FC	Final Cooler	% of FC flow
BC	Barometric Cond.	% of BC flow
VS	Abs. Vent Scrub.	% of VS flow
FH	Fume Hood Scrub.	% of FH flow

3. REt,n — Reuse, where t = type
n = % of raw waste flow

t: U = before treatment
T = after treatment

4. BDn — Blowdown, where n = discharge as % of raw waste flow

B. Control Technology

10. DI — Deionization

11. SR — Spray/Fog Rinse

12. CC — Countercurrent Rinse

13. DR — Drag-out Recovery

C. Disposal Methods

20. H — Haul Off-Site

21. DW — Deep Well Injection

TABLE VII-1
OPERATING MODES, CONTROL AND TREATMENT
TECHNOLOGIES AND DISPOSAL METHODS
PAGE 2

C. Disposal Methods (cont.)

22.	Qt,d	Coke Quenching, where t = type d = discharge as % of makeup t: DW = Dirty Water CW = Clean Water
23.	EME	Evaporation, Multiple Effect
24.	ES	Evaporation on Slag
25.	EVC	Evaporation, Vapor Compression Distillation

D. Treatment Technology

30.	SC	Segregated Collection
31.	E	Equalization/Blending
32.	Scr	Screening
33.	OB	Oil Collecting Baffle
34.	SS	Surface Skimming (oil, etc.)
35.	PSP	Primary Scale Pit
36.	SSP	Secondary Scale Pit
37.	EB	Emulsion Breaking
38.	A	Acidification
39.	AO	Air Oxidation
40.	GF	Gas Flotation
41.	M	Mixing
42.	Nt	Neutralization, where t = type t: L = Lime C = Caustic A = Acid W = Wastes O = Other, footnote

TABLE VII-1
OPERATING MODES, CONTROL AND TREATMENT
TECHNOLOGIES AND DISPOSAL METHODS
PAGE 3

D. Treatment Technology (cont.)

43. FLt — Flocculation, where t = type

t: L = Lime
A = Alum
P = Polymer
M = Magnetic
O = Other, footnote

44. CY — Cyclone/Centrifuge/Classifier

44a. DT — Drag Tank

45. CL — Clarifier

46. T — Thickener

47. TP — Tube/Plate Settler

48. SLn — Settling Lagoon, where n = days of retention time

49. BL — Bottom Liner

50. VF — Vacuum Filtration (of e.g., CL, T> or TP underflows)

51. Ft,m,h — Filtration, where t = type
m = media
h = head

t	m	h
D = Deep Bed	S = Sand	G = Gravity
F = Flat Bed	O = Other, footnote	P = Pressure

52. CLt — Chlorination, where t = type

t: A = Alkaline
B = Breakpoint

53. CO — Chemical Oxidation (other than CLA or CLB)

TABLE VII-1
OPERATING MODES, CONTROL AND TREATMENT
TECHNOLOGIES AND DISPOSAL METHODS
PAGE 4

D. Treatment Technology (cont.)

54. BOt — Biological Oxidation, where t = type

t: An = Activated Sludge
n = No. of Stages
T = Trickling Filter
B = Biodisc
O = Other, footnote

55. CR — Chemical Reduction (e.g., chromium)

56. DP — Dephenolizer

57. ASt — Ammonia Stripping, where t = type

t: F = Free
L = Lime
C = Caustic

58. APt — Ammonia Product, where t = type

t: S = Sulfate
N = Nitric Acid
A = Anhydrous
P = Phosphate
H = Hydroxide
O = Other, footnote

59. DSt — Desulfurization, where t = type

t: Q = Qualifying
N = Nonqualifying

60. CT — Cooling Tower

61. AR — Acid Regeneration

62. AU — Acid Recovery and Reuse

63. ACt — Activated Carbon, where t = type

t: P = Powdered
G = Granular

64. IX — Ion Exchange

65. RO — Reverse Osmosis

66. D — Distillation

TABLE VII-1
OPERATING MODES, CONTROL AND TREATMENT
TECHNOLOGIES AND DISPOSAL METHODS
PAGE 5

D. Treatment Technology (cont.)

67.	AAl	Activated Alumina
68.	OZ	Ozonation
69.	UV	Ultraviolet Radiation
70.	CNTt,n	Central Treatment, where t = type n = process flow as % of total flow t: 1 = Same Subcats. 2 = Similar Subcats. 3 = Synergistic Subcats. 4 = Cooling Water 5 = Incompatible Subcats.
71.	On	Other, where n = Footnote number
72.	SB	Settling Basin
73.	AE	Aeration
74.	PS	Precipitation with Sulfide

TABLE VII-2

SUMMARY OF ANALTYICAL DATA FROM SAMPLED PLANTS
ORIGINAL GUIDELINES SURVEY
BASIC OXYGEN FURNACE - SEMI-WET

Raw Wastewaters

Reference Code	0432A		0396D		Average	
Plant Code	R		U			
Sample Points	1		1			
Flow, gal/ton	130		728		429	
	mg/l	lbs/1000 lbs	mg/l	lbs/1000 lbs	mg/l	lbs/1000 lbs
pH (Units)	11.1-11.3		11.8-11.9		11.2-11.8	
Fluoride	NA	NA	3.1	0.00940	3.1	0.00940
Suspended Solids	325	0.176	418	1.27	372	0.723
120 Copper	0.05	0.000027	0.02	0.000061	0.04	0.000044
122 Lead	1.8	0.000970	0.50	0.00152	1.2	0.00124
123 Mercury	0.0042	0.000002	0.0	0.000	0.0021	0.000001
129 Zinc	1.01	0.000546	1.08	0.00328	1.04	0.00191

Effluents

Reference Code	0432A		0396D	
Plant Code	R		U	
Sample Points	2		2	
Flow, gal/ton	0		728	
C&TT	Settling tank, FLP, RTP 100		T,FLP,OT	
	mg/l	lbs/1000 lbs	mg/l	lbs/1000 lbs
pH (Units)	11.3-11.4		11.9-12.0	
Fluoride	NA	NA	3.8	0.0115
Suspended Solids	125	0	38	0.115
120 Copper	0.025	0	0.0	0.000
122 Lead	0.53	0	0.5	0.00152
123 Mercury	0.0023	0	0.0022	0.000007
128 Zinc	0.325	0	0.08	0.000243

NA: No analysis performed

NOTE: For a definition of C&TT codes, refer to Table VII-1.

TABLE VII-3

SUMMARY OF ANALYTICAL DATA FROM SAMPLED PLANTS
ORIGINAL GUIDELINES SURVEY
BASIC OXYGEN FURNACE - WET-SUPPRESSED COMBUSTION

Raw Wastewaters

Reference Code	0060	
Plant Code	S	
Sample Points	1	
Flow, gal/ton	982	
	mg/l	lbs/10000 lbs
pH (Units)	7.7-11.0	
Fluoride	NA	NA
Suspended Solids	359	1.47
122 Lead	3.52	0.0144
128 Zinc	17	0.0696

Effluents

Reference Code	0060	
Plant Code	S	
Sample Points	2	
Flow, gal/ton	52	
C&TT	Classifier, T,FLP,VF, RTP94.7	
	mg/l	lbs/1000 lbs
pH (Units)	8.7-10.5	
Fluoride	NA	NA
Suspended Solids	22	0.00478
122 Lead	0.12	0.0000261
128 Zinc	0.9	0.000196

NA: No analysis performed

NOTE: For a definition of C&TT codes, refer to Table VII-1.

TABLE VII-4

SUMMARY OF ANALYTICAL DATA FROM SAMPLED PLANTS
TOXIC POLLUTANT SURVEY
BASIC OXYGEN FURNACE - WET-SUPPRESSED COMBUSTION

Raw Wastewaters

Reference Code	0384A		0856N		0684F					
Plant Code	032		034		038					
Sample Points	B+C+D		B		B		Average		Overall Average(1)	
Flow, gal/ton	1470		1150		569		1063		1043	
	mg/l	lbs/1000 lbs	mg/l	lbs/1000 lbs	mg/l	lbs/1000 lbs	mg/l	lbs/1000 lbs	mg/l	lbs/1000 lbs
pH (Units)	6.6-9.9		9.2-9.5		9.9-12.3		6.6-12.3		6.6-12.3	
Fluoride	NA	NA	NA	NA	NA	NA	NA	NA	NA	NA
Suspended Solids	1468	9.00	380	1.82	673	1.60	840	4.14	720	3.47
118 Cadmium	0.095	0.000582	NA	NA	0.033	0.000078	0.064	0.000330	0.064	0.000330
119 Chromium	1.06	0.00650	NA	NA	0.167	0.000396	0.614	0.00345	0.614	0.00345
120 Copper	0.321	0.00197	0.030	0.000144	0.073	0.000173	0.141	0.000762	0.141	0.000762
122 Lead	26.8	0.164	1.00	0.00480	0.233	0.000553	9.3	0.0565	7.9	0.0459
124 Nickel	0.335	0.00205	0.36	0.00173	0.032	0.000076	0.24	0.00129	0.24	0.00129
126 Silver	0.026	0.000159	NA	NA	0.016	0.000038	0.021	0.000098	0.021	0.000098
128 Zinc	8.42	0.0516	0.0610	0.00293	1.17	0.00278	3.40	0.0191	6.80	0.0317

Effluents

Reference Code	0384A		0856N		0684F	
Plant Code	032		034		038	
Sample Points	H		D		D	
Flow, gal/ton	98		47		33	
C&TT	Classifier,T,CL RTP 93		T,CL,FLP, RTP 96		Desiltors,T,VF, TP,FLP,FLL, RTP 94.2	
	mg/l	lbs/1000 lbs	mg/l	lbs/1000 lbs	mg/l	lbs/1000 lbs
pH	8.2-9.7		9.7-10.2		7.0-8.0	
Fluoride	NA	NA	NA	NA	NA	NA
Suspended Solids	55	0.0225	47	0.00921	13	0.00179
118 Cadmium	0.001	0.000000	NA	NA	0.010	0.000001
119 Chromium	0.007	0.000003	NA	NA	0.0	0.000
120 Copper	0.006	0.000002	0.027	0.000005	0.0	0.000
122 Lead	0.468	0.000191	0.27	0.000053	NA	NA
124 Nickel	0.0	0.000	0.22	0.000043	0.0	0.000
126 Silver	0.0	0.000	NA	NA	0.0	0.000
128 Zinc	0.227	0.000093	0.087	0.000017	0.027	0.000004

(1) Average of all values on Tables VII-3 and VII-4.
NA: No analysis performed

NOTE: For a definition of C&TT codes, refer to Table VII-1.

TABLE VII-5

SUMMARY OF ANALYTICAL DATA FROM SAMPLED PLANTS
ORIGINAL GUIDELINES SURVEY
BASIC OXYGEN FURNACE - WET-OPEN COMBUSTION

Raw Wastewaters

Reference Code	0112A		0584F		Averages	
Plant Code	T		V			
Sample Points	1		5			
Flow, gal/ton	633		259		446	
	mg/1	lbs/1000 lbs	mg/1	lbs/1000 lbs	mg/1	lbs/1000 lbs
pH	8.0-8.8		3.4		3.4-8.8	
Fluoride	26.5	0.0699	22	0.0238	24.3	0.0469
Suspended Solids	3812	10.1	5375	5.80	4594	7.95
120 Copper	2.4	0.00634	0.41	0.000443	1.4	0.00339
123 Mercury	0.0031	0.000008	0.0016	0.000002	0.0023	0.000005
128 Zinc	6.0	0.0158	195	0.211	100	0.113

Effluents

Reference Code	0112A		0584F	
Plant Code	T		V	
Sample Points	2		6	
Flow, gal/ton	150		33	
C&TT	Classifier,T,FLP,RTP76		Classifier,T,FLP,RTP87	
	mg/1	lbs/1000 lbs	mg/1	lbs/1000 lbs
pH (units)	8.3-10.5		6.4	
Fluoride	19.5	0.0122	10	0.00138
Suspended Solids	81	0.0507	40	0.00550
120 Copper	0.12	0.000075	0.0	0.000
123 Mercury	0.0013	0.000001	0.0012	0.000000
128 Zinc	0.50	0.000313	2.8	0.000385

NOTE: For a definition of C&TT codes, refer to Table VII-1.

TABLE VII-6

SUMMARY OF ANALYTICAL DATA FROM SAMPLED PLANTS
TOXIC POLLUTANT SURVEY
BASIC OXYGEN FURNACE - WET-OPEN COMBUSTION

Raw Wastewaters

Reference Code		0020B		0856B		0868A		0112D		Averages		Overall Averages(1)		
Plant Code		031		033		035		036						
Sample Points		B		C		L		O						
Flow, (gal/ton)		1059		241		1046		454		717		626		
		mg/l	lbs/1000 lbs	mg/l	lbs/1000 lbs	mg/l	lbs/1000 lbs	mg/l	lbs/1000 lbs	mg/l	lbs/1000 lbs	mg/l	lbs/1000 lbs
pH (Units)		7.6-8.7		11.6-11.9		7.8-9.3		10.4-11.8		7.6-11.9		3.4-11.9	
Fluoride		NA	NA	NA	NA	NA	NA	9	0.0170	9	0.0170	19.2	0.037
Suspended Solids		409	1.81	7754	7.79	866	3.78	7073	13.4	4026	6.70	4215	7.11
23	Chloroform	0.052	0.000230	0.010	0.000010	0.056	0.000244	0.053	0.000100	0.043	0.000146	0.043	0.000146
115	Arsenic	0.053	0.000234	0.075	0.000075	NA	NA	NA	NA	0.064	0.000154	0.064	0.000154
118	Cadmium	0.090	0.000397	1.20	0.00121	0.020	0.000087	0.167	0.000316	0.369	0.000502	0.369	0.000502
119	Chromium	17.3	0.0764	2.95	0.00296	0.023	0.000100	0.367	0.000695	5.16	0.0200	5.16	0.0200
120	Copper	1.21	0.00534	0.924	0.000929	0.020	0.000087	0.333	0.000630	0.622	0.00175	0.883	0.00229
122	Lead	1.73	0.00764	13.6	0.0137	0.040	0.000174	0.367	0.000695	3.93	0.00555	3.93	0.00555
123	Mercury	0.033	0.000146	0.0	0.000	0.0005	0.000002	0.0335	0.000063	0.0168	0.000053	0.012	0.000037
124	Nickel	1.00	0.00442	0.471	0.000473	0.0	0.000	0.043	0.000081	0.378	0.00124	0.378	0.00124
125	Selenium	0.008	0.000035	0.034	0.000034	NA	NA	NA	NA	0.021	0.000034	0.021	0.000034
126	Silver	0.160	0.000707	0.118	0.000119	0.0	0.000	0.043	0.000081	0.080	0.000227	0.080	0.000227
127	Thallium	0.020	0.000088	0.037	0.000037	NA	NA	NA	NA	0.029	0.000063	0.029	0.000063
128	Zinc	3.33	0.0147	49.0	0.0492	3.57	0.0156	2.00	0.00379	14.5	0.0208	43.2	0.0517

TABLE VII-6
SUMMARY OF ANALYTICAL DATA FROM SAMPLED PLANTS
TOXIC POLLUTANT SURVEY
BASIC OXYGEN FURNACE - WET-OPEN COMBUSTION
PAGE 2

Effluents

Reference Code	0020B		0856B		0868A		0112D	
Plant Code	031		033		035		036	
Sample Points	(B/B+C)D		D		M		P	
Flow, gal/ton	1059		241		113		244	
C&TT	DR,ET, FLL,FLP,CL,SL,VF,OT		Classifier,CY,T, CT,RUP(UNK)		Desiltor,CL,VF, RTP90		CY,T,CT, RTP46	
	mg/l	lbs/1000 lbs	mg/l	lbs/1000 lbs	mg/l	lbs/1000 lbs	mg/l	lbs/1000 lbs
pH (Units)			11.5-11.7		8.0-8.9		11.9-12.0	
Fluoride	9.0	ISD	NA	NA	NA	NA	4.4	0.00448
Suspended Solids	19	0.0496	52	0.0523	47	0.0221	1,240	1.26
23 Chloroform	0.089	0.000554	0.022	0.000022	0.009	0.000004	0.122	0.000124
115 Arsenic	0.006	0.000013	0.013	0.000013	NA	NA	NA	NA
118 Cadmium	0.326	0.000377	NA	NA	0.0	0.000	0.0	0.000
119 Chromium	0.691	0.00815	10	0.0100	0.002	0.000001	0.036	0.000037
120 Copper	0.476	0.00135	0.043	0.000043	0.002	0.000001	0.363	0.000369
122 Lead	0.455	0.000149	0.31	0.000312	NA	NA	0.10	0.000102
123 Mercury	0.0	0.000	0.0	0.000	0.0003	0.000000	0.0001	0.000000
124 Nickel	0.697	0.00845	0.67	0.000673	0.0	0.000	0.0	0.000
125 Selenium	0.002	0.000001	0.031	0.000031	NA	NA	NA	NA
126 Silver	0.000	0.000000	NA	NA	0.0	0.000	0.335	0.000341
127 Thallium	0.020	0.000090	0.020	0.000020	NA	NA	NA	NA
128 Zinc	2.14	0.000051	0.316	0.000318	0.467	0.000220	0.467	0.000475

(1) Average of all values on Tables VII-5 and VII-6.
NA : No analysis performed
ISD: Insufficient data to complete calculation.

NOTE: For a definition of C&TT codes, refer to Table VII-1.

TABLE VII-7

SUMMARY OF ANALYTICAL DATA FROM SAMPLED PLANTS
ORIGINAL GUIDELINES SURVEY
OPEN HEARTH FURNACE - WET

Raw Wastewaters

					Averages	
Reference Code	0112A		0060			
Plant Code	W		X			
Sample Points	1		1			
Flow, Gal/Ton	607		550		578	
	mg/l	lbs/1000 lbs	mg/l	lbs/1000 lbs	mg/l	lbs/1000 lbs
pH (Units)	2.1-3.4		6.1-6.3		2.1-6.3	
Fluoride	161	0.407	66	0.151	114	0.279
Suspended Solids	779	1.97	4275	9.80	2527	5.89
120 Copper	0.52	0.00132	4.4	0.0101	2.5	0.00571
122 Lead	0.6	0.00152	2.4	0.00550	1.5	0.00351
128 Zinc	27	0.0683	*	*	27	0.0683

Effluents

Reference Code	0112A		0060	
Plant Code	W		X	
Sample Point(s)	3		2	
Flow, Gal/Ton	51.4		118	
C&TT	T, RTP 46, RUP 45		T, FLL, VF, RTP 79	
	mg/l	lbs/1000 lbs	mg/l	lbs/1000 lbs
pH (Units)	1.8-3.4		6.5	
Fluoride	148	0.0317	63	0.0310
Suspended Solids	80	0.0171	51	0.0251
120 Copper	0.40	0.000086	0.21	0.000103
122 Lead	0.21	0.000045	3.5	0.00172
128 Zinc	26.5	0.00568	*	*

*: A representative sample could not be obtained.

NOTE: For a definition of C&TT codes, refer to Table VII-1.

TABLE VII-8

SUMMARY OF ANALYTICAL DATA FROM SAMPLED PLANTS
TOXIC POLLUTANT SURVEY
OPEN HEARTH FURNACE - WET

Raw Wastewaters

Reference Code		0492A		0864A				
Plant Code		042		043				
Sample Point(s)		C		B				Overall(1)
Flow, Gal/Ton		506		1163		Average		Average
		mg/l	lbs/1000 lbs	mg/l	lbs/1000 lbs	mg/l	lbs/1000 lbs	mg/l	lbs/1000 lbs
	pH (Units)	6.7		2.1		2.4-6.7		2.1-6.7	
	Fluoride	100	0.211	255	1.24	178	0.726	146	0.502
	Suspended Solids	1516	3.20	511	2.48	1014	2.84	1770	4.36
118	Cadmium	1.0	0.00211	0.001	0.000005	0.50	0.00106	0.50	0.00106
119	Chromium	0.010	0.000021	0.080	0.00388	0.045	0.000204	0.045	0.000204
120	Copper	0.60	0.00127	0.083	0.000402	0.34	0.000836	1.40	0.00327
121	Cyanide	0.005	0.000011	0.039	0.000189	0.022	0.000100	0.022	0.000100
122	Lead	8.0	0.0169	0.17	0.000824	4.1	0.00886	2.8	0.00619
124	Nickel	0.005	0.000011	0.053	0.000257	0.029	0.000134	0.029	0.000134
128	Zinc	390	0.823	0.50	0.00242	195	0.413	139	0.298

Effluents

Reference Code		0492A*		0864A	
Plant Code		042		043	
Sample Point(s)		(C/B+C)D		C	
Flow, Gal/Ton		359		3.7	
C&TT		CL,NL,FLP,VF,RTP 67		CL,FLL,FLP,RTP 99.7	
		mg/l	lbs/1000 lbs	mg/l	lbs/1000 lbs
	pH (Units)	9.1		10.8	
	Fluoride	27	0.057	32	0.000494
	Suspended Solids	15	0.032	30	0.000463
118	Cadmium	0.095	0.00020	0.006	0.000000
119	Chromium	0.010	0.000015	0.010	0.000000
120	Copper	0.025	0.000053	0.013	0.000000
121	Cyanide	0.007	0.000010	0.005	0.000000
122	Lead	1.5	0.0032	0.010	0.000000
124	Nickel	0.010	0.000015	0.002	0.000000
128	Zinc	4.4	0.0093	0.033	0.000001

*: The effluent quality data was considered as the clarifier overflow, although the blowdown undergoes further treatment along with other wastewaters in a terminal treatment lagoon. This was done because the clarifier overflow is more indicative of the effluent from the open hearth treatment system and does not include the pollutant contributions of other sources.

(1) Average of all values on Tables VII-7 and VII-8.

NOTE: For a definition of the C&TT codes, refer to Table VII-1.

TABLE VII-9

SUMMARY OF ANALYTICAL DATA FROM SAMPLED PLANTS
ORIGINAL GUIDELINES SURVEY
ELECTRIC ARC FURNACE - SEMI-WET

Raw Wastewaters

Reference Code		0432C		0584A			
Plant Code		Y		Z			
Sample Points		1		NA		Average	
Flow, Gal/Ton		97		NA		97	
		mg/l	lbs/1000 lbs	mg/l	lbs/1000 lbs	mg/l	lbs/1000 lbs
	pH (Units)	7.5-8.0				7.5-8.0	
	Fluoride	30.0	0.0121	*	*	30	0.0121
	Suspended Solids	2165	0.876	*	*	2165	0.876
120	Copper	2.40	0.000971	*	*	2.40	0.000971
122	Lead	32.9	0.0133	*	*	32.9	0.0133
128	Zinc	125	0.0506	*	*	125	0.0506

Effluents

Reference Code		0432C		0584A	
Plant Code		Y		Z	
Sample Points		2		NA	
Flow, Gal/Ton		0		0	
C&TT Code		DR,FLP,RTP 100		DR,RTP 100	
		mg/l	lbs/1000 lbs	mg/l	lbs/1000 lbs
	pH (Units)	4.7-7.9		*	
	Fluoride	28.3	0	*	0
	Suspended Solids	628	0	*	0
120	Copper	0.973	0	*	0
122	Lead	8.53	0	*	0
128	Zinc	53.7	0	*	0

*: No samples of the raw or treated wastewaters could be collected during the survey, however, this plant was confirmed as having a closed system with no wastewater discharge.

NOTE: For definition of C&TT Codes, refer to Table VII-1.

TABLE VII-10

SUMMARY OF ANALYTICAL DATA FROM SAMPLED PLANTS
TOXIC POLLUTANT SURVEY
ELECTRIC ARC FURNACE - SEMI-WET

Raw Wastewater

			Overall Average[1]	
Reference Code	0060F			
Plant Code	059B			
Sample Points	K-O-H			
Flow, Gal/Ton	20.6		58.8	
	mg/l	lb/1000 lbs	mg/l	lbs/1000 lbs
pH (units)	8.6-9.1		7.5-9.1	
Fluoride	562	0.0483	296	0.0302
Suspended Solids	50032	4.30	26099	2.59
120 Copper	NA	NA	2.40	0.000971
122 Lead	NA	NA	32.9	0.0133
128 Zinc	217	0.0186	171	0.0346

Effluent

Reference Code	0060F	
Plant Code	059B	
Sample Points	K-O-H / K	L
Flow, Gal/Ton	20.6	
C&TT	CL,VF,OT,RET(Unk)	
	mg/l	lb/1000 lbs
pH (Units)	8.1	
Fluoride	64	0.00495
Suspended Solids	119	0.0102
120 Copper	NA	NA
122 Lead	NA	NA
128 Zinc	3.3	0.000203

(1) Average of all values on Tables VII-9 and VII-10.

* : A representative sample could not be obtained.
NA: No analysis performed

NOTE: For a definition of C&TT codes, refer to Table VII-1.

TABLE VII-11

SUMMARY OF ANALYTICAL DATA FROM SAMPLED PLANTS
ORIGINAL GUIDELINES SURVEY
ELECTRIC ARC FURNACE - WET

Raw Wastewater

Reference Code		0868B	
Plant Code		AB	
Sample Point(s)		2-11	
Flow, Gal/Ton		3060	
	mg/l		lbs/1000 lbs
pH (Units)		*	
Fluoride	*		*
Suspended Solids	*		*
120 Copper	*		*
122 Lead	*		*
128 Zinc	*		*

Effluent

Reference Code		0868B	
Plant Code		AB	
Sample Point(s)		4	
Flow, Gal/Ton		162	
C&TT		T,VF,SL,RTP95	
	mg/l		lbs/1000 lbs
pH (Units)		8.4	
Fluoride	12		0.00811
Suspended Solids	23		0.0155
120 Copper	0.0		0.000
122 Lead	0.10		0.000068
128 Zinc	0.02		0.000014

*: A representative sample of the raw waste could not be obtained.

NOTE: For a definition of the C&TT codes, refer to Table VII-1.

TABLE VII-12

SUMMARY OF ANALYTICAL DATA FROM SAMPLED PLANTS
TOXIC POLLUTANT SURVEY
ELECTRIC ARC FURNACE - WET

Raw Wastewater

Reference Code	0612		0492A		0060F		Average		Overall Average(2)	
Plant Code	051		052		059A					
Sample Points	B-D		B		F					
Flow, Gal/Ton	1141(1)		1178		2300		1540		1920	
	mg/l	lbs/1000 lbs	mg/l	lbs/1000 lbs	mg/l	lbs/1000 lbs	mg/l	lbs/1000 lbs	mg/l	lbs/1000 lbs
pH (units)	7.1-7.2		8.4-9.6		6.6-7.5		6.6-9.6		6.6-9.6	
Fluoride	NA	NA	30	0.147	49	0.470	39.5	0.308	39.5	0.308
Suspended Solids	2843	13.5	883	4.34	6308	60.5	3345	26.1	3345	26.1
39 Fluoranthene	0.0	0.000	0.0	0.000	0.055	0.000528	0.018	0.000176	0.018	0.000176
58 4-Nitrophenol	0.0	0.000	0.0	0.000	0.031	0.000297	0.010	0.000099	0.010	0.000099
64 Pentachlorophenol	0.0	0.000	0.0	0.000	0.040	0.000384	0.013	0.000128	0.013	0.000128
114 Antimony	0.67	0.00319	NA	NA	NA	NA	0.67	0.00319	0.67	0.00319
115 Arsenic	1.23	0.00585	NA	NA	NA	NA	1.23	0.00585	1.23	0.00585
118 Cadmium	3.33	0.0158	NA	NA	NA	NA	3.33	0.0158	3.33	0.0158
119 Chromium	4.30	0.0205	NA	NA	NA	NA	4.30	0.0205	4.30	0.0205
120 Copper	1.33	0.00633	NA	NA	NA	NA	1.33	0.00633	1.33	0.00633
122 Lead	23.3	0.111	NA	NA	NA	NA	23.3	0.111	23.3	0.111
124 Nickel	0.043	0.000205	NA	NA	NA	NA	0.043	0.000205	0.043	0.000205
126 Silver	0.063	0.000300	NA	NA	NA	NA	0.063	0.000300	0.063	0.000300
128 Zinc	100	0.476	27	0.133	190	1.82	105.7	0.810	105.7	0.810

TABLE VII-12
SUMMARY OF ANALTYICAL DATA FROM SAMPLED PLANTS
TOXIC POLLUTANT SURVEY
ELECTRIC ARC FURNACE - WET
PAGE 2

	Effluents					
Reference Code	0612		0492A		0060F	
Plant Code	051		052		059A	
Sample Points	E		B/(B+C) D		G	
Flow, gal/ton	17.3		836		238	
C&TT	CL,T,VF,RTP98.5		CL,FLP,NL,VF,RTP29		CL,VF,RTP&RUP89.7	
	mg/l	lbs/1000 lbs	mg/l	lbs/1000 lbs	mg/l	lbs/1000 lbs
Suspended Solids	86	0.00620	15	0.0101	38	0.0377
Fluoride	NA	NA	27	0.0103	34	0.0337
pH (Units)	7.6		8.5-9.5		7.1-7.9	
39 Fluoranthene	0.0	0.000	0.0	0.000	0.010	0.000010
58 4-Nitrophenol	0.0	0.000	0.0	0.000	0.0	0.000
64 Pentachlorophenol	0.0	0.000	0.0	0.000	0.014	0.000014
114 Antimony	0.005	0.000000	NA	NA	NA	NA
115 Arsenic	0.011	0.000001	NA	NA	NA	NA
118 Cadmium	1.50	0.000108	NA	NA	NA	NA
119 Chromium	0.55	0.000040	NA	NA	NA	NA
120 Copper	0.080	0.000006	NA	NA	NA	NA
122 Lead	1.50	0.000108	NA	NA	NA	NA
124 Nickel	0.0	0.000	NA	NA	NA	NA
126 Silver	0.0	0.000	NA	NA	NA	NA
128 Zinc	31	0.00224	4.4	0.000421	38	0.00377

(1) Applied flow does not include 22 GPT which is evaporated at the quencher.
(2) Average of all values on Tables VII-11 and VII-12.

NA: No analysis performed

NOTE: For a definition of C&TT codes, refer to Table VII-1.

TABLE VII-13

SUMMARY OF D-DCP ANALYTICAL DATA
BASIC OXYGEN FURNACE - WET-SUPPRESSED COMBUSTION

Plant Code	0384A				0856N			
C&TT	Classifier,T,CL,RTP 94				CL,FLP,T,RTP 96.9			
Parameter	No. of Analyses	Avg.	Max.	Std. Dev.	No. of Analyses	Avg.	Max.	Std. Dev.
pH (Units)	76	9.3	10.3	NA	3	7.93	9.95	NA
Fluoride	*				3	38.3	40	1.53
Suspended Solids	75	16	47	9	3	34	43	8.2
118 Cadmium	*				3	ND	0.005	ND
119 Chromium	*				3	ND	0.010	ND
120 Copper	*				3	0.008	0.014	0.005
122 Lead	*				3	0.070	0.110	0.037
124 Nickel	*				3	ND	0.010	ND
126 Silver	*				3	ND	0.005	ND
128 Zinc	*				3	0.036	0.048	0.012

* : No data provided.
ND: Not detected, i.e., below the limits of detection.
NA: Not applicable

NOTES: All values are expressed in mg/l unless otherwise noted.
: For definitions of C&TT codes, refer to Table VII-1.

TABLE VII-14

SUMMARY OF D-DCP ANALYTICAL DATA
BASIC OXYGEN FURNACE - WET-OPEN COMBUSTION

Plant Code	0020B				0860B			
C&TT	CL,FLL,FLP,VF,RUP 71.9				Scr,CL,SL,SS,VF,CT,RTP 88.4			
Parameter	No. of Analyses	Avg.	Max.	Std. Dev.	No. of Analyses	Avg.	Max.	Std. Dev.
pH (Units)	120	7.5	9.5	NA	5	9.6	10.4	NA
Fluoride	106	20.2	44	7.6	*			
Suspended Solids	106	41.1	1310	127.6	*			
119 Chromium	99	0.083	1.55	0.172	*			

* : No data provided
NA: Not Applicable

NOTE: All values are expressed in mg/l unless otherwise noted.
: For definitions of C&TT codes, refer to Table VII-1.

TABLE VII-15

SUMMARY OF D-DCP ANALYTICAL DATA
OPEN HEARTH FURNACE - WET

Plant Code C&TT		0112A T,FLP,RUP and RTP 87.5				0864A T,CL,FLL,FLP, RTP 93.8	
Parameters		No. of Analyses	Avg.	Max.	Std. Dev.	No. of Analyses	Value
	pH (Units)					1	10.0
	Fluoride					1	22.5
	Suspended Solids	16	163	455	109.5	1	36
119	Chromium					1	0.020
120	Copper					1	0.023
121	Cyanide					1	0.031
124	Nickel					1	0.040
128	Zinc					1	0.050

NOTES: All values are expressed in mg/l unless otherwise noted.
: For definitions of C&TT codes, refer to Table VII-1.

TABLE VII-16

SUMMARY OF D-DCP ANALYTICAL DATA
ELECTRIC ARC FURNACE - WET

Plant Code	0060D				0612		0868B			
C&TT	CR,Classifier,CL,VF,RTP 72.0				CL,VF,RTP and RUP 98.1		Classifier,T,CY,SL,RTP 91.1			
Parameters	No. of Analyses	Avg.	Max.	Std. Dev.	No. of Analyses	Value	No. of Analyses	Avg.	Max.	Std. Dev.
pH (Units)	20	7.0-9.0		NA	1	6.8	*			
Fluoride	20	22.7	42	9.8	*		*			
Suspended Solids	18	54.1	84	18.7	1	62	*			
115 Arsenic	*				*		1	<0.02	NA	NA
118 Cadmium	*				1	3.0	1	<0.02	NA	NA
119 Chromium	19	1.9	6.3	1.5	1	0.32	1	<0.01	NA	NA
120 Copper	*				1	0.11	1	<0.01	NA	NA
122 Lead	*				1	2.5	1	0.06	NA	NA
124 Nickel	*				1	0.09	1	<0.1	NA	NA
126 Silver	*				*		2	0.015	0.02	0.002
128 Zinc	*				1	48	2	0.145	0.17	0.036

*: No data provided.
NA: Not Applicable

NOTES: All values are expressed in mg/l unless otherwise noted.
: For definitions of C&TT codes, refer to Table VII-1.

TABLE VII-17
RAW WASTEWATER CHARACTERIZATION
BASIC OXYGEN FURNACE

(All values are expressed in mg/l unless otherwise noted)

	Parameters	Concentrations
Semi-Wet		
	pH (Units)	10-12
	Fluoride	10
	Suspended Solids	375
120	Copper	0.04
122	Lead	1.4
123	Mercury	0.002
128	Zinc	1
Wet-Suppressed Combustion		
	pH (Units)	8-11
	Fluoride	15
	Suspended Solids	720
118	Cadmium	0.04
119	Chromium	0.4
120	Copper	0.25
122	Lead	8
124	Nickel	0.3
126	Silver	0.02
128	Zinc	6.8
Wet-Open Combustion		
	pH (Units)	8-11
	Fluoride	20
	Suspended Solids	4200
23	Chloroform	0.05
115	Arsenic	0.06
118	Cadmium	0.6
119	Chromium	5.2
120	Copper	1
122	Lead	3.9
123	Mercury	0.02
124	Nickel	0.4
125	Selenium	0.02
126	Silver	0.08
127	Thallium	0.06
128	Zinc	14

TABLE VII-18

RAW WASTEWATER CHARACTERIZATION
OPEN HEARTH FURNACE

(All values expressed in mg/l unless otherwise noted)

	Parameters	Concentrations
Wet		
	pH (Units)	3-7
	Fluoride	140
	Suspended Solids	1700
120	Copper	1.4
122	Lead	0.4
128	Zinc	140

TABLE VII-19

RAW WASTEWATER CHARACTERIZATION
ELECTRIC ARC FURNACE

(All values are expressed in mg/l unless otherwise noted)

	Parameters	Concentrations
Semi-Wet		
	pH (Units)	6-9
	Fluoride	30
	Suspended Solids	2200
120	Copper	2.4
122	Lead	33
128	Zinc	120
Wet		
	pH (Units)	6-9
	Fluoride	40
	Suspended Solids	3400
4	Benzene	0.02
58	4-Nitrophenol	0.01
64	Pentachlorophenol	0.01
114	Antimony	0.7
115	Arsenic	1.2
118	Cadmium	3.3
119	Chromium	4.3
120	Copper	1.3
122	Lead	23
124	Nickel	0.05
126	Silver	0.06
128	Zinc	100

TABLE VII-20

NET CONCENTRATION AND LOAD ANALYSIS
BASIC OXYGEN FURNACE - SEMI WET OPERATIONS

Make-up Water → [Basic Oxygen Furnace Process, Model Size: 5,300 TPD] → Raw Wastewater

36 GPT x 5,300 TPD = 0.19 MGD

360 GPT x 5,300 TPD = 1.91 MGD

Regulated Pollutants	Make-up Conc. (mg/1) Min.	Make-up Conc. (mg/1) Max.	Make-up Conc. (mg/1) Avg.	Make-up Avg. Load (lbs/day)	Raw Waste Avg. Conc. (mg/1)	Raw Waste Avg. Load (lbs/day)	Make-up as a % of Raw Waste Load
Total Suspended Solids	<1	681	120	191.0	375	5,974	3.20
122 Lead	<0.020	0.94	0.14	0.22	1.4	22.30	0.99
128 Zinc	<0.060	0.60	0.14	0.22	1.0	15.93	1.38

TABLE VII-21

NET CONCENTRATION AND LOAD ANALYSIS
BASIC OXYGEN FURNACE - WET OPEN COMBUSTION OPERATIONS

Make-up Water → [Basic Oxygen Furnace Process, Model Size: 9,100 TPD] → Raw Wastewater

110 GPT x 9,100 TPD = 1.00 MGD

1,100 GPT x 9,100 TPD = 10.01 MGD

Regulated Pollutants	Make-up Conc. (mg/l) Min.	Make-up Conc. (mg/l) Max.	Make-up Conc. (mg/l) Avg.	Make-up Avg. Load (lbs/day)	Raw Waste Avg. Conc. (mg/l)	Raw Waste Avg. Load (lbs/day)	Make-up as a % of Raw Waste Load
Total Suspended Solids	<1	681	120	1,001	4,200	350,630	0.29
122 Lead	<0.020	0.94	0.14	11.68	3.9	325.6	3.59
128 Zinc	<0.060	0.60	0.14	11.68	14	1,169	1.00

TABLE VII-22

NET CONCENTRATION AND LOAD ANALYSIS
BASIC OXYGEN FURNACE - WET SUPPRESSED COMBUSTION OPERATIONS

Make-up Water → [Basic Oxygen Furnace Process, Model Size: 7,400 TPD] → Raw Wastewater

50 GPT x 7,400 TPD = 0.37 MGD

1,000 GPT x 7,400 TPD = 7.40 MGD

Regulated Pollutants	Make-up Conc. (mg/1) Min.	Make-up Conc. (mg/1) Max.	Make-up Conc. (mg/1) Avg.	Make-up Avg. Load (lbs/day)	Raw Waste Avg. Conc. (mg/1)	Raw Waste Avg. Load (lbs/day)	Make-up as a % of Raw Waste Load
Total Suspended Solids	<1	681	120	370.3	720	44,436	0.83
122 Lead	<0.020	0.94	0.14	0.43	8	493.7	0.087
128 Zinc	<0.060	0.60	0.14	0.43	6.8	419.7	0.10

TABLE VII-23

NET CONCENTRATION AND LOAD ANALYSIS
OPEN HEARTH - WET OPERATIONS

Make-up Water → [Open Hearth Furnace Process, Model Size: 6,700 TPD] → Raw Wastewater

110 GPT x 6,700 TPD = 737,000 GPD

1,700 GPT x 6,700 TPD = 11.39 MGD

Regulated Pollutants	Make-up Conc. (mg/l) Min.	Make-up Conc. (mg/l) Max.	Make-up Conc. (mg/l) Avg.	Make-up Avg. Load (lbs/day)	Raw Waste Avg. Conc. (mg/l)	Raw Waste Avg. Load (lbs/day)	Make-up as a % of Raw Waste Load
Total Suspended Solids	6	13	10	61.47	1,700	161,487	0.038
122 Lead	<0.020	<0.020	<0.020	0.0	0.4	38.00	0.0
128 Zinc	0.05	0.12	0.10	0.61	14.0	13,299	0.005

TABLE VII-24

NET CONCENTRATION AND LOAD ANALYSIS
ELECTRIC ARC FURNACE - SEMI-WET OPERATIONS

Make-up Water → [Electric Arc Furnace Process, Model Size: 3,100 TPD] → Raw Wastewater

15 GPT x 3,100 TPD = 194,000 GPD

150 GPT x 3,100 TPD = 3.39 MGD

Regulated Pollutants	Make-up Conc. (mg/1) Min.	Make-up Conc. (mg/1) Max.	Make-up Conc. (mg/1) Avg.	Make-up Avg. Load (lbs/day)	Raw Waste Avg. Conc. (mg/1)	Raw Waste Avg. Load (lbs/day)	Make-up as a % of Raw Waste Load
Total Suspended Solids	4	9	6.3	2.44	2,200	8,532	0.029
122 Lead	<0.020	<0.020	<0.020	0.0	33	128.0	0.0
128 Zinc	0.050	0.60	0.23	0.089	120	465.4	0.019

TABLE VII-25

NET CONCENTRATION AND LOAD ANALYSIS
ELECTRIC ARC FURNACE - WET OPERATIONS

Make-up Water → [Electric Arc Furnace Process, Model Size: 1,800 TPD] → Raw Wastewater

110 GPT x 1,800 TPD = 198,000 GPD

2,100 GPT x 1,800 TPD = 3.78 MGD

Regulated Pollutants	Make-up Conc. (mg/1) Min.	Make-up Conc. (mg/1) Max.	Make-up Conc. (mg/1) Avg.	Make-up Avg. Load (lbs/day)	Raw Waste Avg. Conc. (mg/1)	Raw Waste Avg. Load (lbs/day)	Make-up as a % of Raw Waste Load
Total Suspended Solids	4	9	6.3	10.40	3,400	107,186	0.010
122 Lead	<0.020	<0.020	<0.020	0.0	23	725.1	0.0
128 Zinc	0.050	0.60	0.23	0.38	100	3,153	0.012

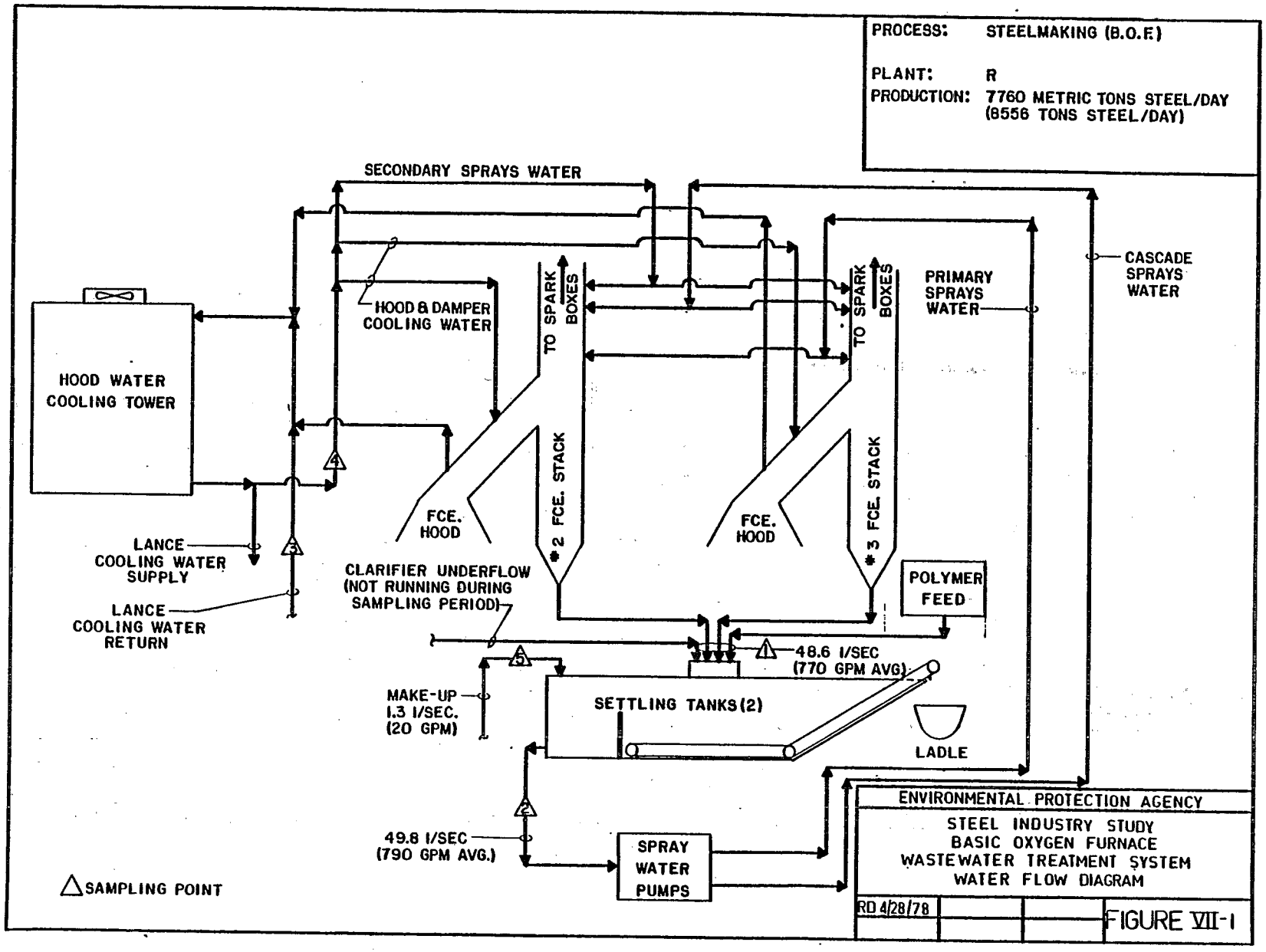
PROCESS: STEELMAKING (B.O.F.)
PLANT: R
PRODUCTION: 7760 METRIC TONS STEEL/DAY (8556 TONS STEEL/DAY)
SECONDARY SPRAYS WATER
HOOD & DAMPER COOLING WATER
TO SPARK BOXES
TO SPARK BOXES
PRIMARY SPRAYS WATER
CASCADE SPRAYS WATER
HOOD WATER COOLING TOWER
#2 FCE. STACK
#3 FCE. STACK
FCE. HOOD
FCE. HOOD
LANCE COOLING WATER SUPPLY
LANCE COOLING WATER RETURN
CLARIFIER UNDERFLOW (NOT RUNNING DURING SAMPLING PERIOD)
POLYMER FEED
48.6 l/SEC (770 GPM AVG.)
MAKE-UP 1.3 l/SEC. (20 GPM)
SETTLING TANKS (2)
LADLE
49.8 l/SEC (790 GPM AVG.)
SPRAY WATER PUMPS
SAMPLING POINT
ENVIRONMENTAL PROTECTION AGENCY
STEEL INDUSTRY STUDY
BASIC OXYGEN FURNACE
WASTEWATER TREATMENT SYSTEM
WATER FLOW DIAGRAM
RD 4/28/78

FIGURE VII-1

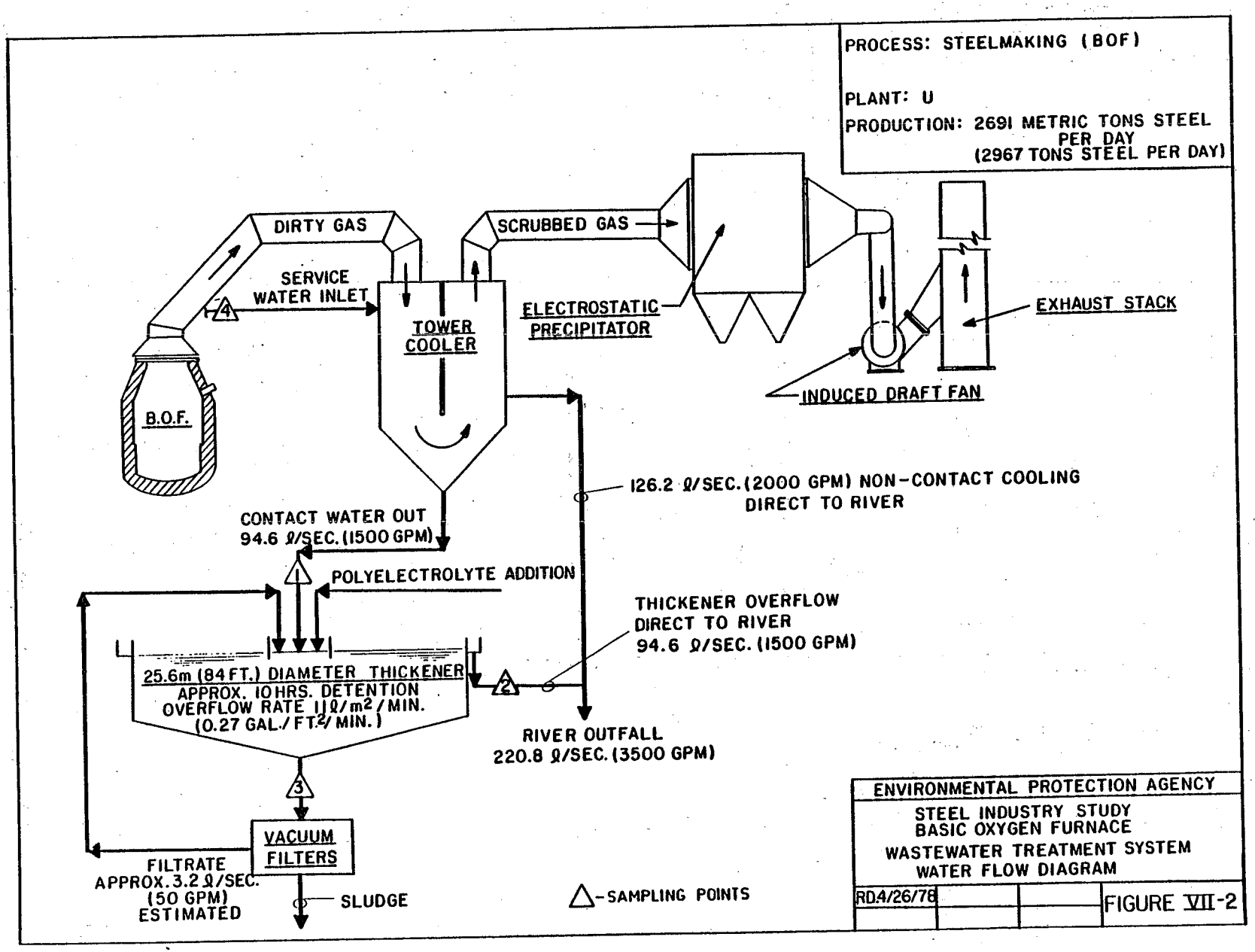
PROCESS: STEELMAKING (BOF)
PLANT: U
PRODUCTION: 2691 METRIC TONS STEEL PER DAY (2967 TONS STEEL PER DAY)
DIRTY GAS
SCRUBBED GAS
SERVICE WATER INLET
TOWER COOLER
ELECTROSTATIC PRECIPITATOR
EXHAUST STACK
INDUCED DRAFT FAN
B.O.F.
126.2 ℓ/SEC. (2000 GPM) NON-CONTACT COOLING DIRECT TO RIVER
CONTACT WATER OUT 94.6 ℓ/SEC. (1500 GPM)
POLYELECTROLYTE ADDITION
THICKENER OVERFLOW DIRECT TO RIVER 94.6 ℓ/SEC. (1500 GPM)
25.6m (84 FT.) DIAMETER THICKENER
APPROX. 10 HRS. DETENTION
OVERFLOW RATE 11 ℓ/m² / MIN.
(0.27 GAL./FT.² / MIN.)
RIVER OUTFALL 220.8 ℓ/SEC. (3500 GPM)
VACUUM FILTERS
FILTRATE APPROX. 3.2 ℓ/SEC. (50 GPM) ESTIMATED
SLUDGE
△-SAMPLING POINTS
ENVIRONMENTAL PROTECTION AGENCY
STEEL INDUSTRY STUDY
BASIC OXYGEN FURNACE
WASTEWATER TREATMENT SYSTEM
WATER FLOW DIAGRAM
RD 4/26/78
FIGURE VII-2

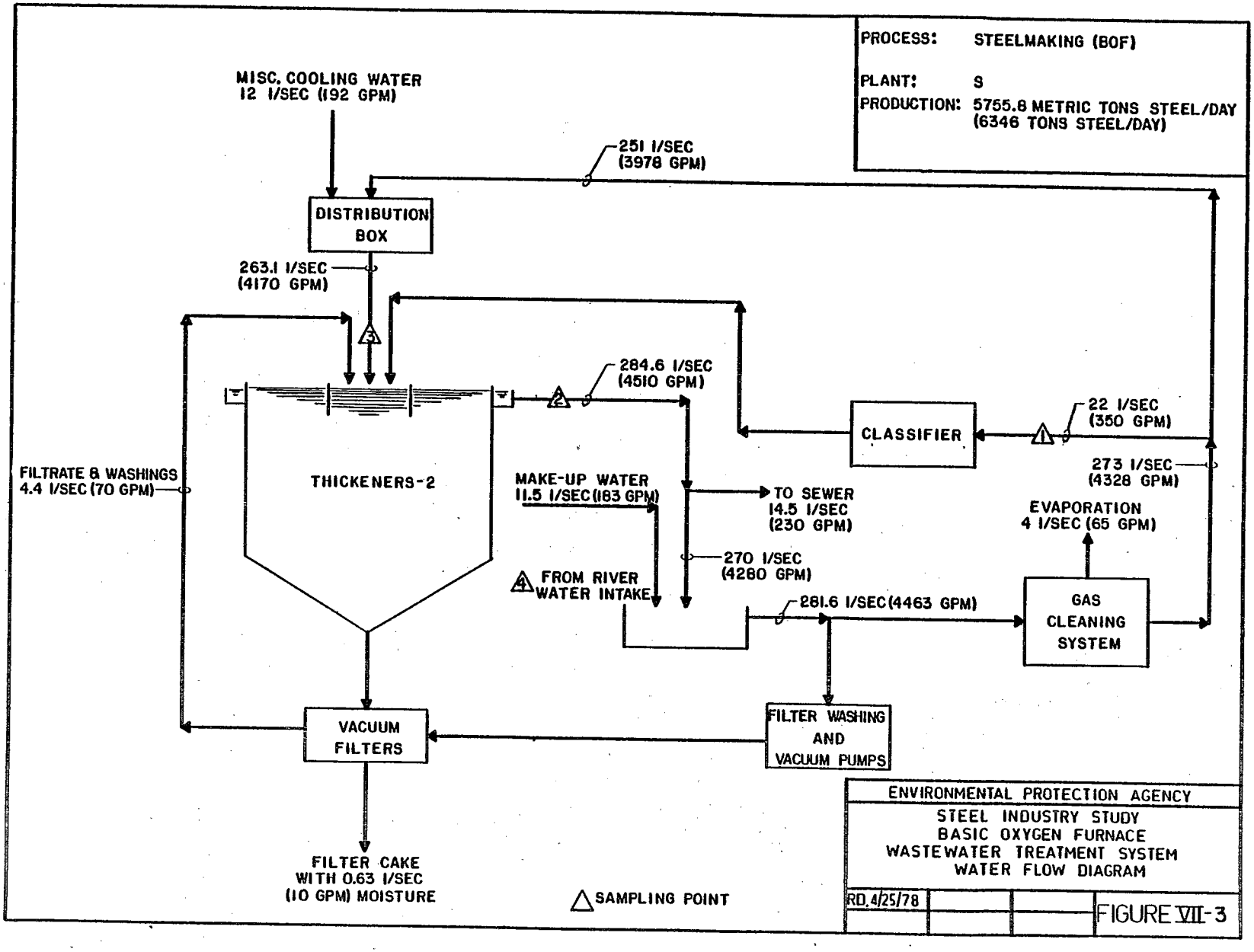
PROCESS: STEELMAKING (BOF)
PLANT: S
PRODUCTION: 5755.8 METRIC TONS STEEL/DAY (6346 TONS STEEL/DAY)
MISC. COOLING WATER 12 l/SEC (192 GPM)
251 l/SEC (3978 GPM)
DISTRIBUTION BOX
263.1 l/SEC (4170 GPM)
284.6 l/SEC (4510 GPM)
CLASSIFIER
22 l/SEC (350 GPM)
273 l/SEC (4328 GPM)
FILTRATE & WASHINGS 4.4 l/SEC (70 GPM)
THICKENERS-2
MAKE-UP WATER 11.5 l/SEC (183 GPM)
TO SEWER 14.5 l/SEC (230 GPM)
EVAPORATION 4 l/SEC (65 GPM)
270 l/SEC (4280 GPM)
FROM RIVER WATER INTAKE
281.6 l/SEC (4463 GPM)
GAS CLEANING SYSTEM
VACUUM FILTERS
FILTER WASHING AND VACUUM PUMPS
FILTER CAKE WITH 0.63 l/SEC (10 GPM) MOISTURE
SAMPLING POINT
ENVIRONMENTAL PROTECTION AGENCY
STEEL INDUSTRY STUDY
BASIC OXYGEN FURNACE
WASTEWATER TREATMENT SYSTEM
WATER FLOW DIAGRAM
RD. 4/25/78
FIGURE VII-3

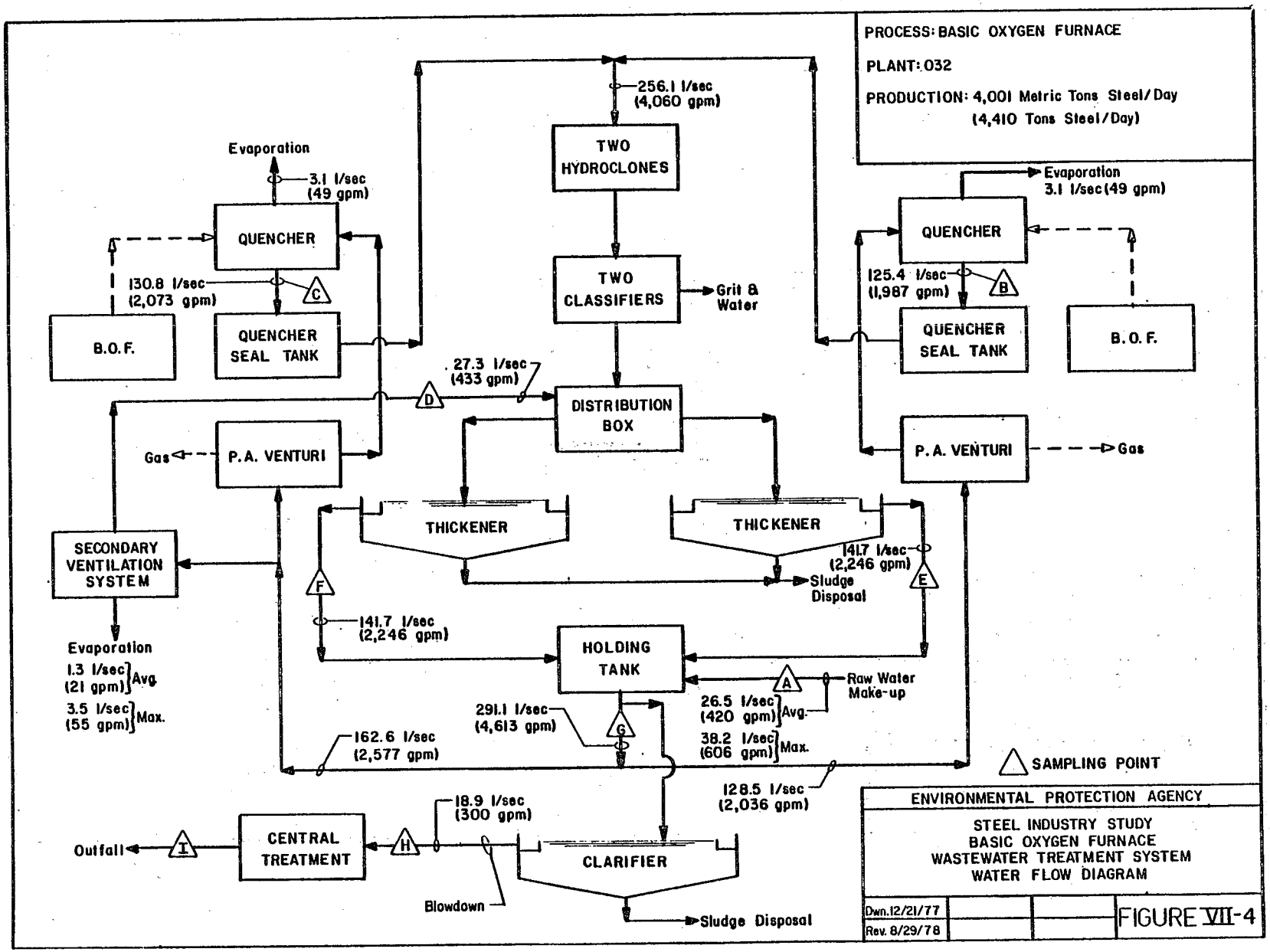
PROCESS: BASIC OXYGEN FURNACE
PLANT: 032
PRODUCTION: 4,001 Metric Tons Steel/Day
(4,410 Tons Steel/Day)
256.1 l/sec
(4,060 gpm)
TWO HYDROCLONES
TWO CLASSIFIERS
Grit & Water
Evaporation
3.1 l/sec
(49 gpm)
QUENCHER
130.8 l/sec
(2,073 gpm)
C
B.O.F.
QUENCHER SEAL TANK
27.3 l/sec
(433 gpm)
D
DISTRIBUTION BOX
Gas
P.A. VENTURI
THICKENER
THICKENER
141.7 l/sec
(2,246 gpm)
Sludge Disposal
E
F
SECONDARY VENTILATION SYSTEM
Evaporation
1.3 l/sec
(21 gpm)
Avg.
3.5 l/sec
(55 gpm)
Max.
141.7 l/sec
(2,246 gpm)
HOLDING TANK
A
Raw Water Make-up
26.5 l/sec
(420 gpm)
Avg.
38.2 l/sec
(606 gpm)
Max.
291.1 l/sec
(4,613 gpm)
G
162.6 l/sec
(2,577 gpm)
128.5 l/sec
(2,036 gpm)
SAMPLING POINT
18.9 l/sec
(300 gpm)
Outfall
I
CENTRAL TREATMENT
H
CLARIFIER
Blowdown
Sludge Disposal
Evaporation
3.1 l/sec (49 gpm)
QUENCHER
125.4 l/sec
(1,987 gpm)
B
QUENCHER SEAL TANK
B.O.F.
P.A. VENTURI
Gas
ENVIRONMENTAL PROTECTION AGENCY
STEEL INDUSTRY STUDY
BASIC OXYGEN FURNACE
WASTEWATER TREATMENT SYSTEM
WATER FLOW DIAGRAM
Dwn. 12/21/77
Rev. 8/29/78
FIGURE VII-4

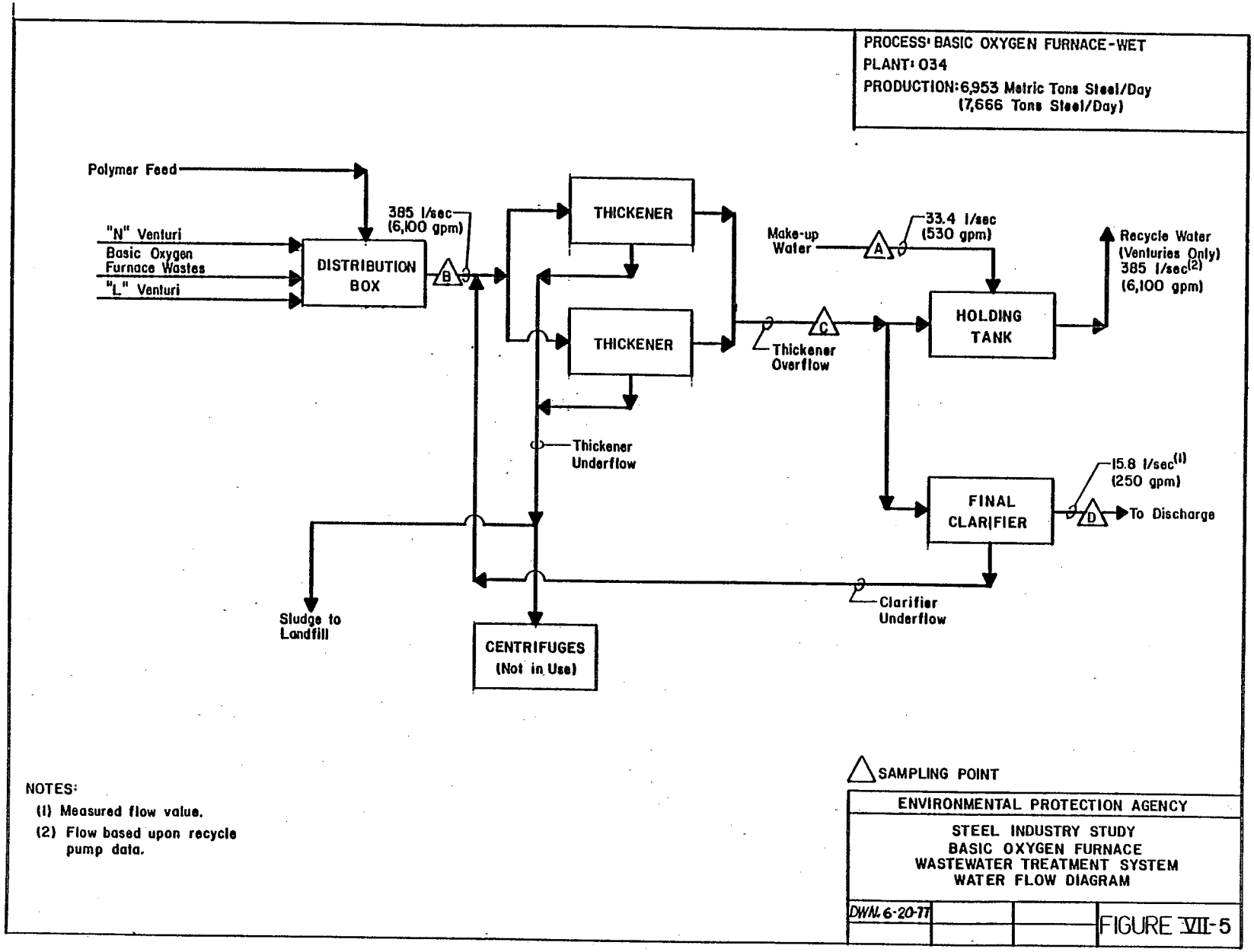
PROCESS: BASIC OXYGEN FURNACE-WET
PLANT: 034
PRODUCTION: 6,953 Metric Tons Steel/Day
(7,666 Tons Steel/Day)
Polymer Feed
"N" Venturi
Basic Oxygen Furnace Wastes
"L" Venturi
DISTRIBUTION BOX
385 l/sec (6,100 gpm)
B
THICKENER
THICKENER
Make-up Water
A
33.4 l/sec (530 gpm)
C
Thickener Overflow
HOLDING TANK
Recycle Water (Venturies Only) 385 l/sec(2) (6,100 gpm)
Thickener Underflow
FINAL CLARIFIER
15.8 l/sec(1) (250 gpm)
D
To Discharge
Clarifier Underflow
Sludge to Landfill
CENTRIFUGES (Not in Use)
SAMPLING POINT
NOTES:
(1) Measured flow value.
(2) Flow based upon recycle pump data.
ENVIRONMENTAL PROTECTION AGENCY
STEEL INDUSTRY STUDY
BASIC OXYGEN FURNACE
WASTEWATER TREATMENT SYSTEM
WATER FLOW DIAGRAM
DWN. 6-20-77
FIGURE VII-5

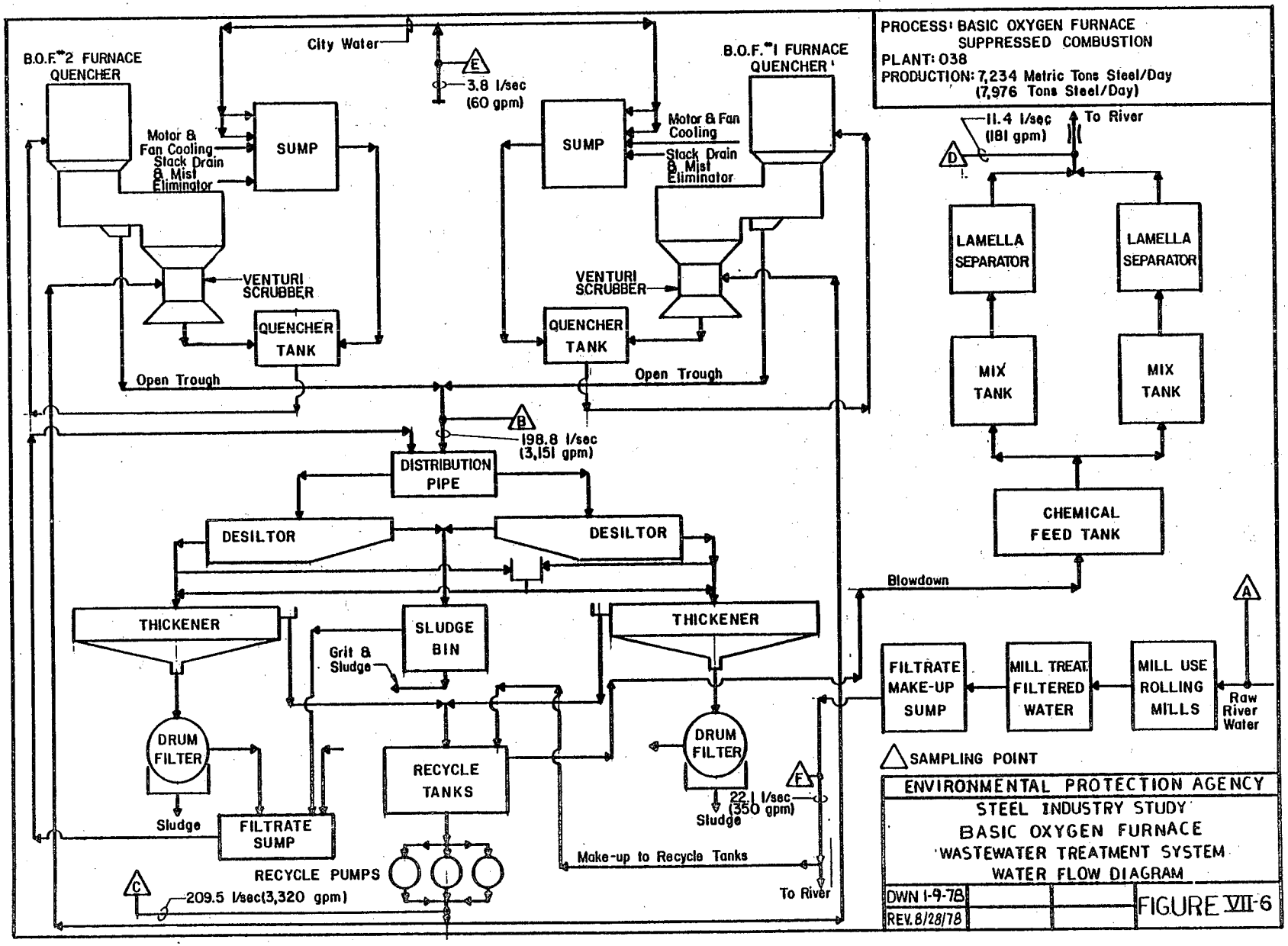
PROCESS: BASIC OXYGEN FURNACE
SUPPRESSED COMBUSTION
PLANT: 038
PRODUCTION: 7,234 Metric Tons Steel/Day
(7,976 Tons Steel/Day)
B.O.F. #2 FURNACE QUENCHER
B.O.F. #1 FURNACE QUENCHER
City Water
3.8 l/sec (60 gpm)
Motor & Fan Cooling
Stack Drain & Mist Eliminator
SUMP
VENTURI SCRUBBER
QUENCHER TANK
Open Trough
198.8 l/sec (3,151 gpm)
DISTRIBUTION PIPE
DESILTOR
THICKENER
SLUDGE BIN
Grit & Sludge
DRUM FILTER
Sludge
FILTRATE SUMP
RECYCLE TANKS
RECYCLE PUMPS
209.5 l/sec (3,320 gpm)
22.1 l/sec (350 gpm)
Make-up to Recycle Tanks
To River
11.4 l/sec (181 gpm)
LAMELLA SEPARATOR
MIX TANK
CHEMICAL FEED TANK
Blowdown
FILTRATE MAKE-UP SUMP
MILL TREAT FILTERED WATER
MILL USE ROLLING MILLS
Raw River Water
SAMPLING POINT
ENVIRONMENTAL PROTECTION AGENCY
STEEL INDUSTRY STUDY
BASIC OXYGEN FURNACE
WASTEWATER TREATMENT SYSTEM
WATER FLOW DIAGRAM
DWN 1-9-78
REV. 8/28/78
FIGURE VII-6

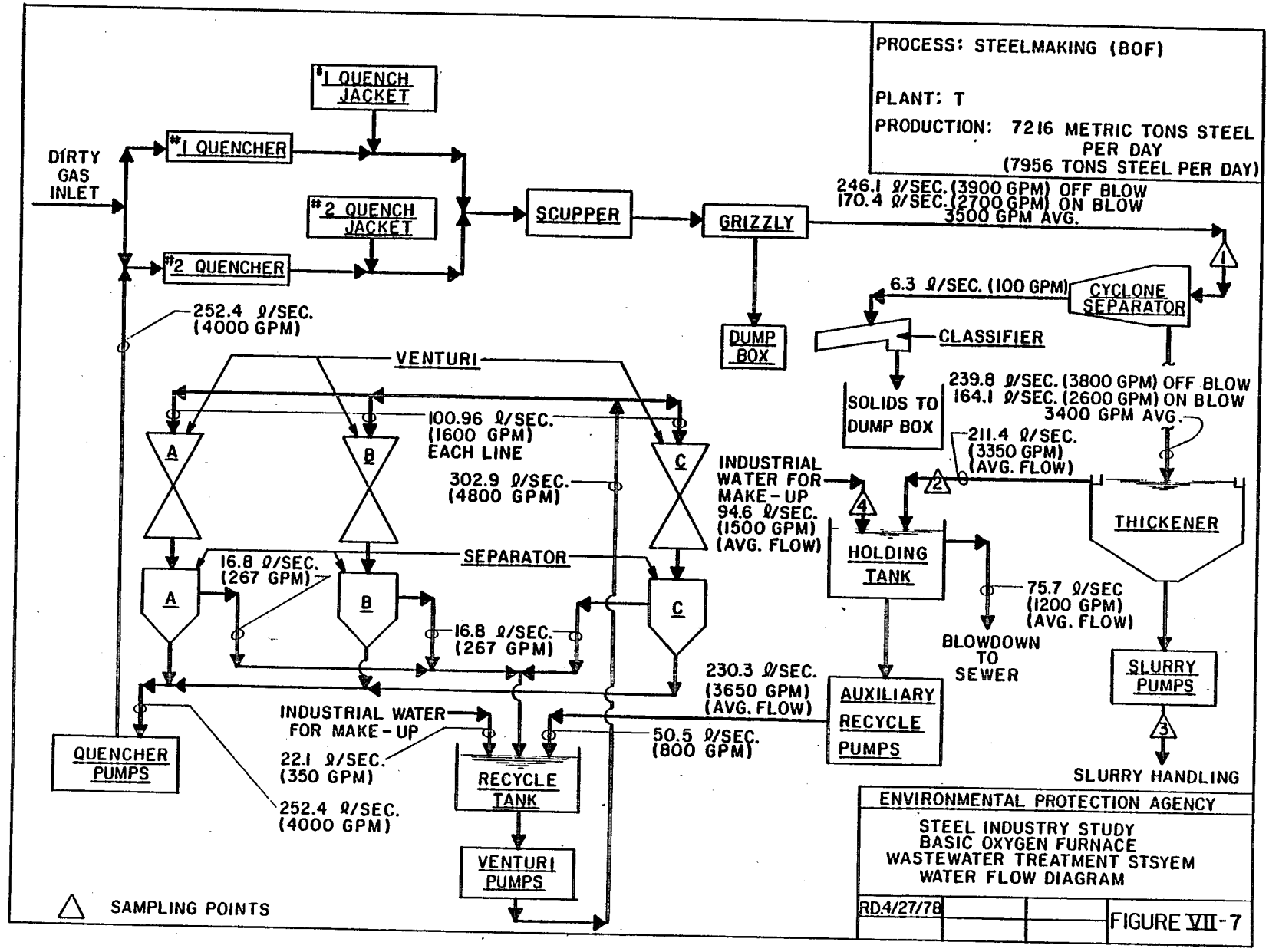
PROCESS: STEELMAKING (BOF)
PLANT: T
PRODUCTION: 7216 METRIC TONS STEEL PER DAY (7956 TONS STEEL PER DAY)
#1 QUENCH JACKET
#1 QUENCHER
#2 QUENCH JACKET
#2 QUENCHER
DIRTY GAS INLET
SCUPPER
GRIZZLY
DUMP BOX
246.1 ℓ/SEC. (3900 GPM) OFF BLOW
170.4 ℓ/SEC. (2700 GPM) ON BLOW
3500 GPM AVG.
6.3 ℓ/SEC. (100 GPM)
CYCLONE SEPARATOR
CLASSIFIER
SOLIDS TO DUMP BOX
239.8 ℓ/SEC. (3800 GPM) OFF BLOW
164.1 ℓ/SEC. (2600 GPM) ON BLOW
3400 GPM AVG.
211.4 ℓ/SEC. (3350 GPM) (AVG. FLOW)
252.4 ℓ/SEC. (4000 GPM)
VENTURI
100.96 ℓ/SEC. (1600 GPM) EACH LINE
302.9 ℓ/SEC. (4800 GPM)
INDUSTRIAL WATER FOR MAKE-UP 94.6 ℓ/SEC. (1500 GPM) (AVG. FLOW)
HOLDING TANK
THICKENER
SEPARATOR
16.8 ℓ/SEC. (267 GPM)
16.8 ℓ/SEC. (267 GPM)
75.7 ℓ/SEC (1200 GPM) (AVG. FLOW)
BLOWDOWN TO SEWER
SLURRY PUMPS
230.3 ℓ/SEC. (3650 GPM) (AVG. FLOW)
AUXILIARY RECYCLE PUMPS
INDUSTRIAL WATER FOR MAKE-UP
22.1 ℓ/SEC. (350 GPM)
50.5 ℓ/SEC. (800 GPM)
QUENCHER PUMPS
RECYCLE TANK
252.4 ℓ/SEC. (4000 GPM)
VENTURI PUMPS
SLURRY HANDLING
SAMPLING POINTS
ENVIRONMENTAL PROTECTION AGENCY
STEEL INDUSTRY STUDY
BASIC OXYGEN FURNACE
WASTEWATER TREATMENT STSYEM
WATER FLOW DIAGRAM
RD4/27/78
FIGURE VII-7

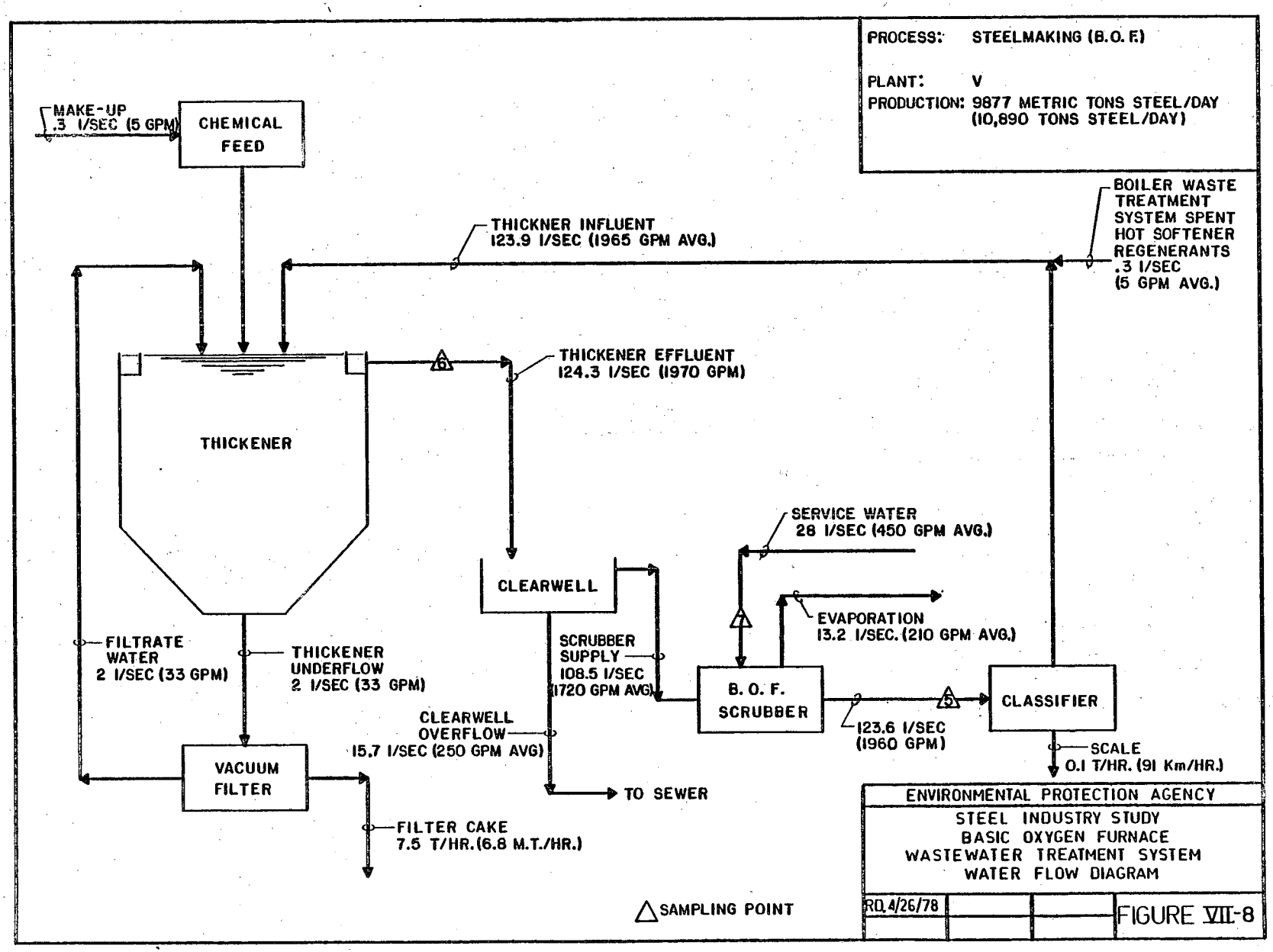
PROCESS: STEELMAKING (B.O.F.)
PLANT: V
PRODUCTION: 9877 METRIC TONS STEEL/DAY (10,890 TONS STEEL/DAY)
MAKE-UP .3 l/SEC (5 GPM)
CHEMICAL FEED
THICKNER INFLUENT 123.9 l/SEC (1965 GPM AVG.)
BOILER WASTE TREATMENT SYSTEM SPENT HOT SOFTENER REGENERANTS .3 l/SEC (5 GPM AVG.)
THICKENER EFFLUENT 124.3 l/SEC (1970 GPM)
THICKENER
SERVICE WATER 28 l/SEC (450 GPM AVG.)
CLEARWELL
EVAPORATION 13.2 l/SEC. (210 GPM AVG.)
FILTRATE WATER 2 l/SEC (33 GPM)
THICKENER UNDERFLOW 2 l/SEC (33 GPM)
SCRUBBER SUPPLY 108.5 l/SEC (1720 GPM AVG.)
B. O. F. SCRUBBER
CLASSIFIER
CLEARWELL OVERFLOW 15.7 l/SEC (250 GPM AVG)
123.6 l/SEC (1960 GPM)
SCALE 0.1 T/HR. (91 Km/HR.)
VACUUM FILTER
TO SEWER
FILTER CAKE 7.5 T/HR. (6.8 M.T./HR.)
SAMPLING POINT
ENVIRONMENTAL PROTECTION AGENCY
STEEL INDUSTRY STUDY
BASIC OXYGEN FURNACE
WASTEWATER TREATMENT SYSTEM
WATER FLOW DIAGRAM
RD 4/26/78
FIGURE VII-8

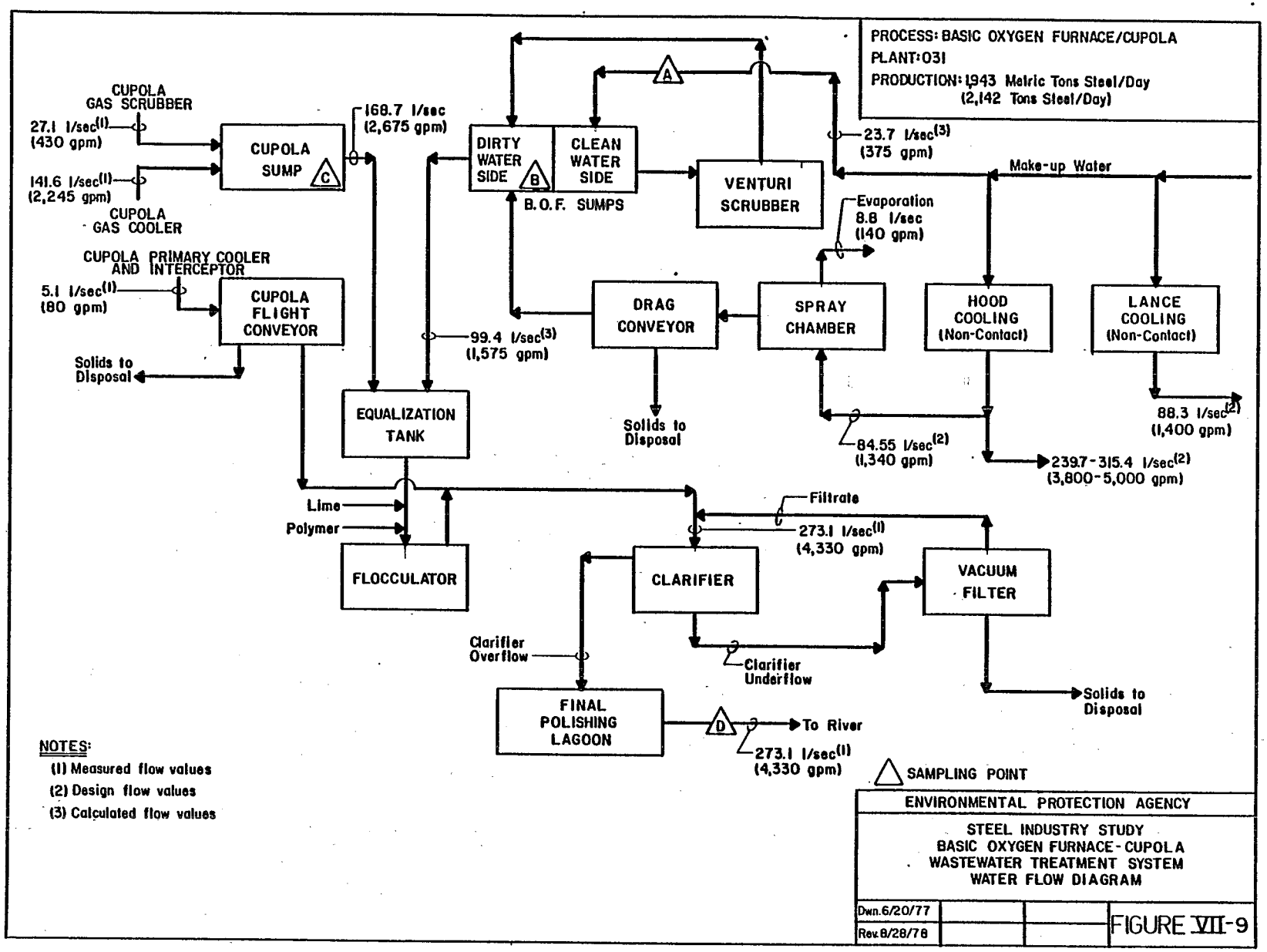
PROCESS: BASIC OXYGEN FURNACE/CUPOLA
PLANT: 031
PRODUCTION: 1,943 Metric Tons Steel/Day
(2,142 Tons Steel/Day)
CUPOLA GAS SCRUBBER
27.1 l/sec(1)
(430 gpm)
141.6 l/sec(1)
(2,245 gpm)
CUPOLA GAS COOLER
CUPOLA SUMP
C
168.7 l/sec
(2,675 gpm)
DIRTY WATER SIDE
B
CLEAN WATER SIDE
A
B.O.F. SUMPS
VENTURI SCRUBBER
23.7 l/sec(3)
(375 gpm)
Make-up Water
Evaporation
8.8 l/sec
(140 gpm)
CUPOLA PRIMARY COOLER AND INTERCEPTOR
5.1 l/sec(1)
(80 gpm)
CUPOLA FLIGHT CONVEYOR
Solids to Disposal
99.4 l/sec(3)
(1,575 gpm)
DRAG CONVEYOR
SPRAY CHAMBER
HOOD COOLING (Non-Contact)
LANCE COOLING (Non-Contact)
88.3 l/sec(2)
(1,400 gpm)
EQUALIZATION TANK
Solids to Disposal
84.55 l/sec(2)
(1,340 gpm)
239.7-315.4 l/sec(2)
(3,800-5,000 gpm)
Lime
Polymer
FLOCCULATOR
Filtrate
273.1 l/sec(1)
(4,330 gpm)
CLARIFIER
VACUUM FILTER
Clarifier Overflow
Clarifier Underflow
Solids to Disposal
FINAL POLISHING LAGOON
D
To River
273.1 l/sec(1)
(4,330 gpm)
SAMPLING POINT
NOTES:
(1) Measured flow values
(2) Design flow values
(3) Calculated flow values
ENVIRONMENTAL PROTECTION AGENCY
STEEL INDUSTRY STUDY
BASIC OXYGEN FURNACE-CUPOLA
WASTEWATER TREATMENT SYSTEM
WATER FLOW DIAGRAM
Dwn. 6/20/77
Rev. 8/28/78
FIGURE VII-9

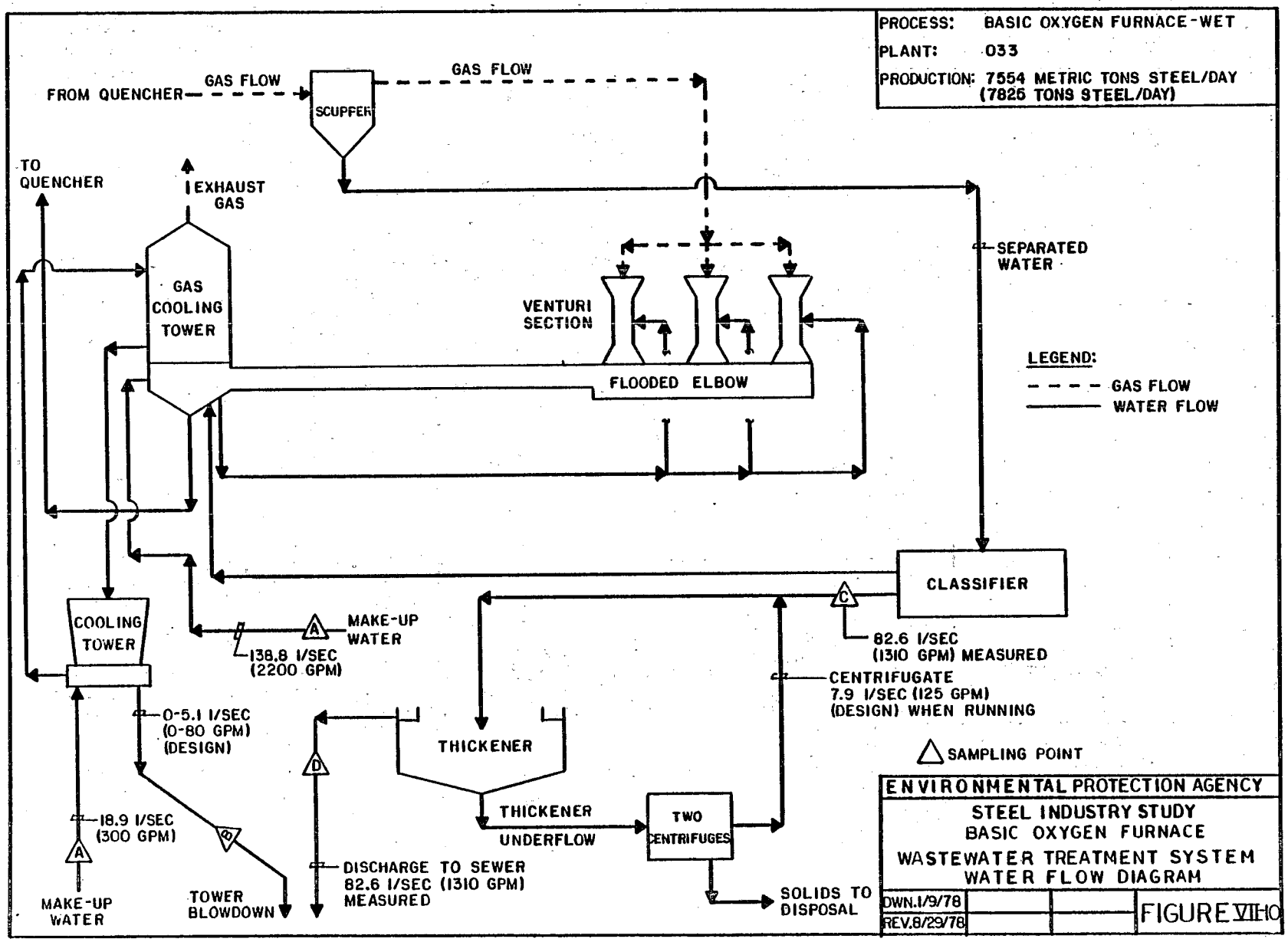
PROCESS: BASIC OXYGEN FURNACE-WET
PLANT: 033
PRODUCTION: 7554 METRIC TONS STEEL/DAY (7825 TONS STEEL/DAY)
FROM QUENCHER
GAS FLOW
SCUPPER
GAS FLOW
TO QUENCHER
EXHAUST GAS
GAS COOLING TOWER
VENTURI SECTION
FLOODED ELBOW
SEPARATED WATER
LEGEND:
GAS FLOW
WATER FLOW
CLASSIFIER
COOLING TOWER
MAKE-UP WATER
138.8 l/SEC (2200 GPM)
82.6 l/SEC (1310 GPM) MEASURED
CENTRIFUGATE 7.9 l/SEC (125 GPM) (DESIGN) WHEN RUNNING
0-5.1 l/SEC (0-80 GPM) (DESIGN)
THICKENER
SAMPLING POINT
18.9 l/SEC (300 GPM)
THICKENER UNDERFLOW
TWO CENTRIFUGES
DISCHARGE TO SEWER 82.6 l/SEC (1310 GPM) MEASURED
SOLIDS TO DISPOSAL
MAKE-UP WATER
TOWER BLOWDOWN
ENVIRONMENTAL PROTECTION AGENCY
STEEL INDUSTRY STUDY
BASIC OXYGEN FURNACE
WASTEWATER TREATMENT SYSTEM
WATER FLOW DIAGRAM
DWN.1/9/78
REV.8/29/78
FIGURE VIII-0

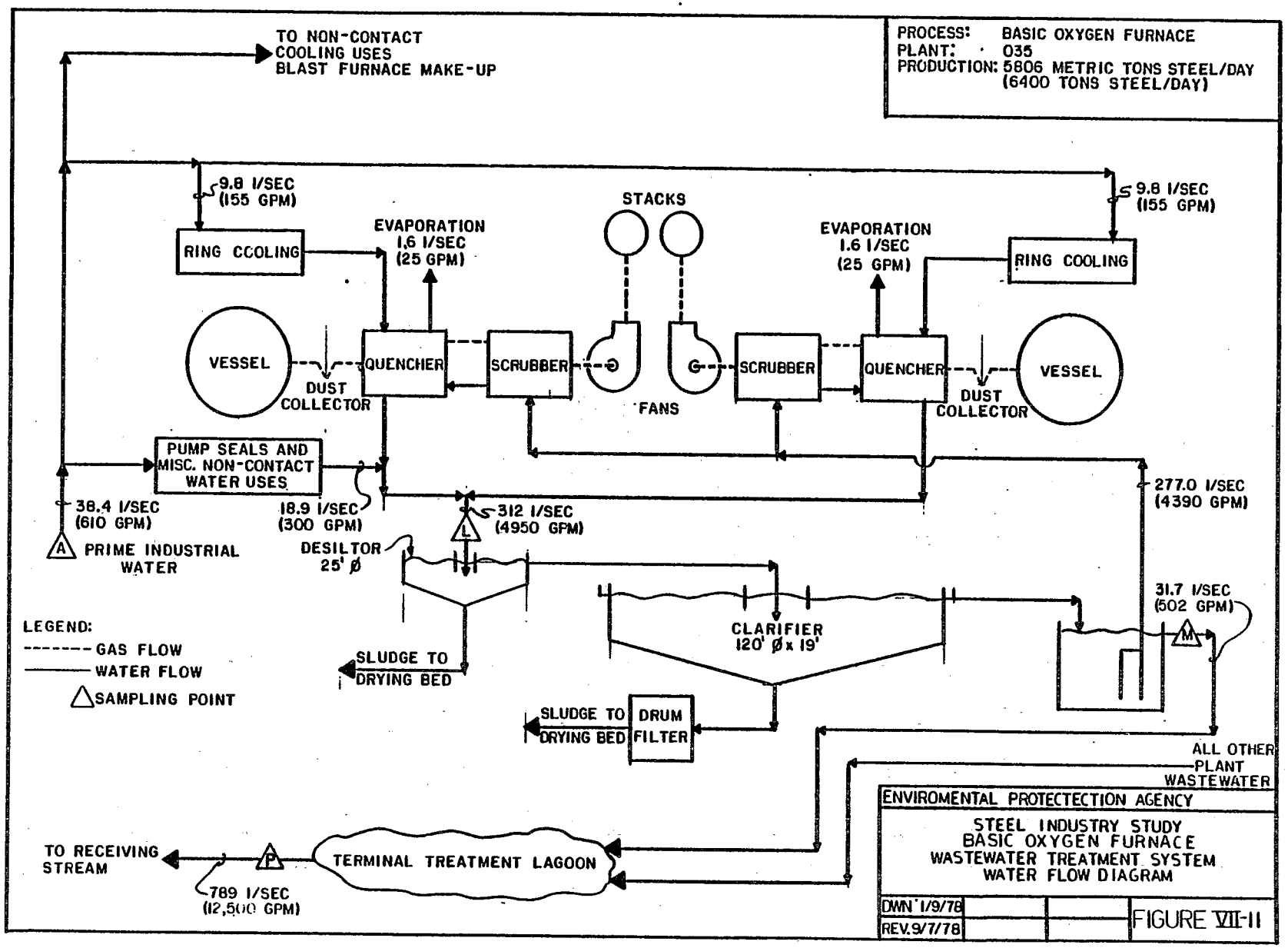
PROCESS: BASIC OXYGEN FURNACE
PLANT: 035
PRODUCTION: 5806 METRIC TONS STEEL/DAY (6400 TONS STEEL/DAY)
TO NON-CONTACT COOLING USES BLAST FURNACE MAKE-UP
9.8 l/SEC (155 GPM)
RING COOLING
EVAPORATION 1.6 l/SEC (25 GPM)
STACKS
EVAPORATION 1.6 l/SEC (25 GPM)
9.8 l/SEC (155 GPM)
RING COOLING
VESSEL
QUENCHER
SCRUBBER
FANS
SCRUBBER
QUENCHER
VESSEL
DUST COLLECTOR
DUST COLLECTOR
PUMP SEALS AND MISC. NON-CONTACT WATER USES
38.4 l/SEC (610 GPM)
A PRIME INDUSTRIAL WATER
18.9 l/SEC (300 GPM)
312 l/SEC (4950 GPM)
L
DESILTOR 25' Ø
277.0 l/SEC (4390 GPM)
31.7 l/SEC (502 GPM)
M
CLARIFIER 120' Ø x 19'
SLUDGE TO DRYING BED
SLUDGE TO DRYING BED
DRUM FILTER
ALL OTHER PLANT WASTEWATER
LEGEND:
GAS FLOW
WATER FLOW
SAMPLING POINT
TO RECEIVING STREAM
P
789 l/SEC (12,500 GPM)
TERMINAL TREATMENT LAGOON
ENVIROMENTAL PROTECTECTION AGENCY
STEEL INDUSTRY STUDY
BASIC OXYGEN FURNACE
WASTEWATER TREATMENT SYSTEM
WATER FLOW DIAGRAM
DWN 1/9/78
REV. 9/7/78
FIGURE VII-11

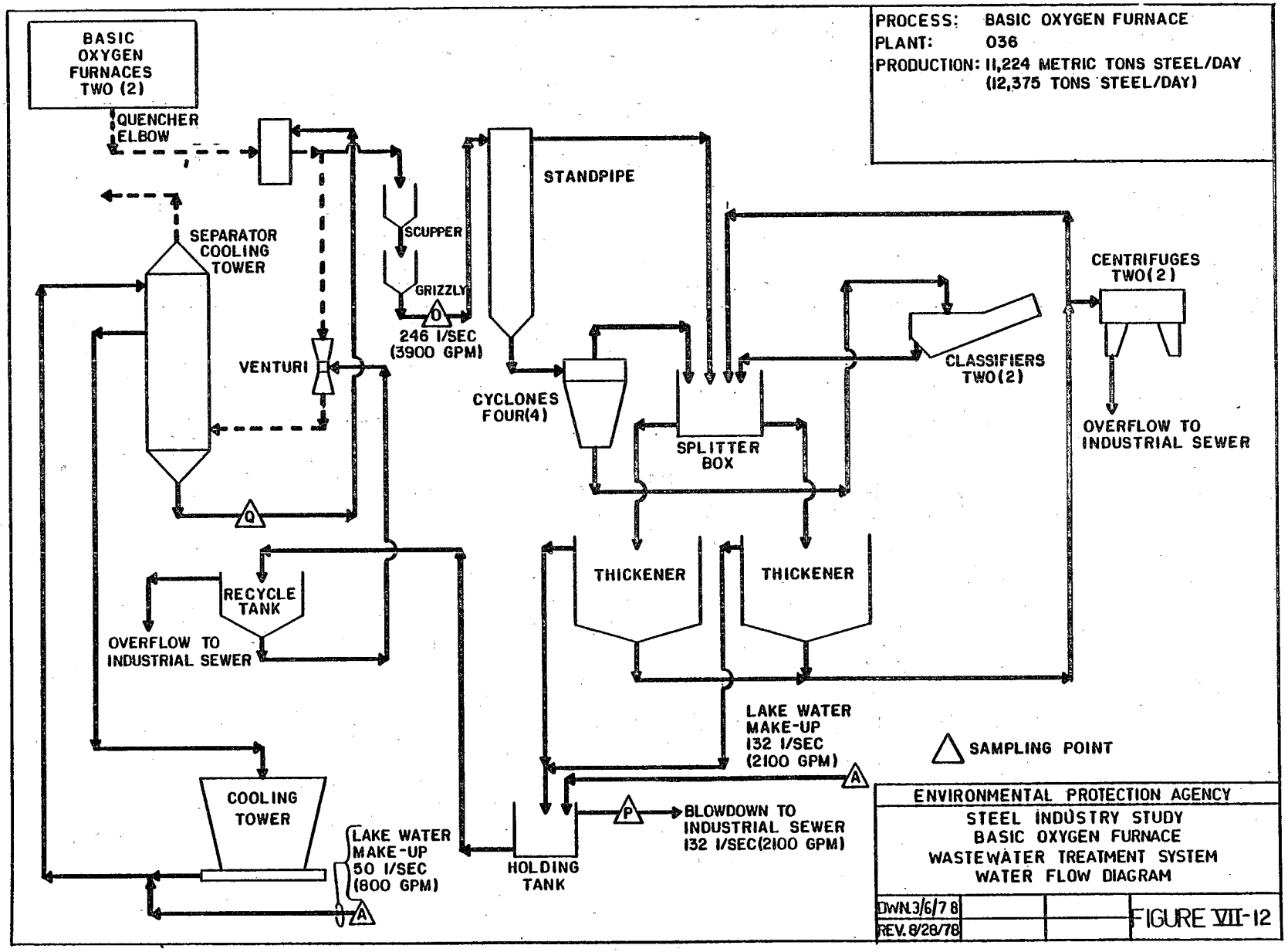
PROCESS: BASIC OXYGEN FURNACE
PLANT: 036
PRODUCTION: 11,224 METRIC TONS STEEL/DAY
(12,375 TONS STEEL/DAY)
BASIC OXYGEN FURNACES TWO (2)
QUENCHER ELBOW
SEPARATOR COOLING TOWER
VENTURI
SCUPPER
GRIZZLY
246 l/SEC (3900 GPM)
STANDPIPE
CYCLONES FOUR(4)
SPLITTER BOX
CLASSIFIERS TWO(2)
CENTRIFUGES TWO(2)
OVERFLOW TO INDUSTRIAL SEWER
THICKENER
THICKENER
RECYCLE TANK
OVERFLOW TO INDUSTRIAL SEWER
LAKE WATER MAKE-UP 132 l/SEC (2100 GPM)
SAMPLING POINT
COOLING TOWER
LAKE WATER MAKE-UP 50 l/SEC (800 GPM)
HOLDING TANK
BLOWDOWN TO INDUSTRIAL SEWER 132 l/SEC(2100 GPM)
ENVIRONMENTAL PROTECTION AGENCY
STEEL INDUSTRY STUDY
BASIC OXYGEN FURNACE
WASTEWATER TREATMENT SYSTEM
WATER FLOW DIAGRAM
DWN.3/6/78
REV.8/28/78
FIGURE VII-12

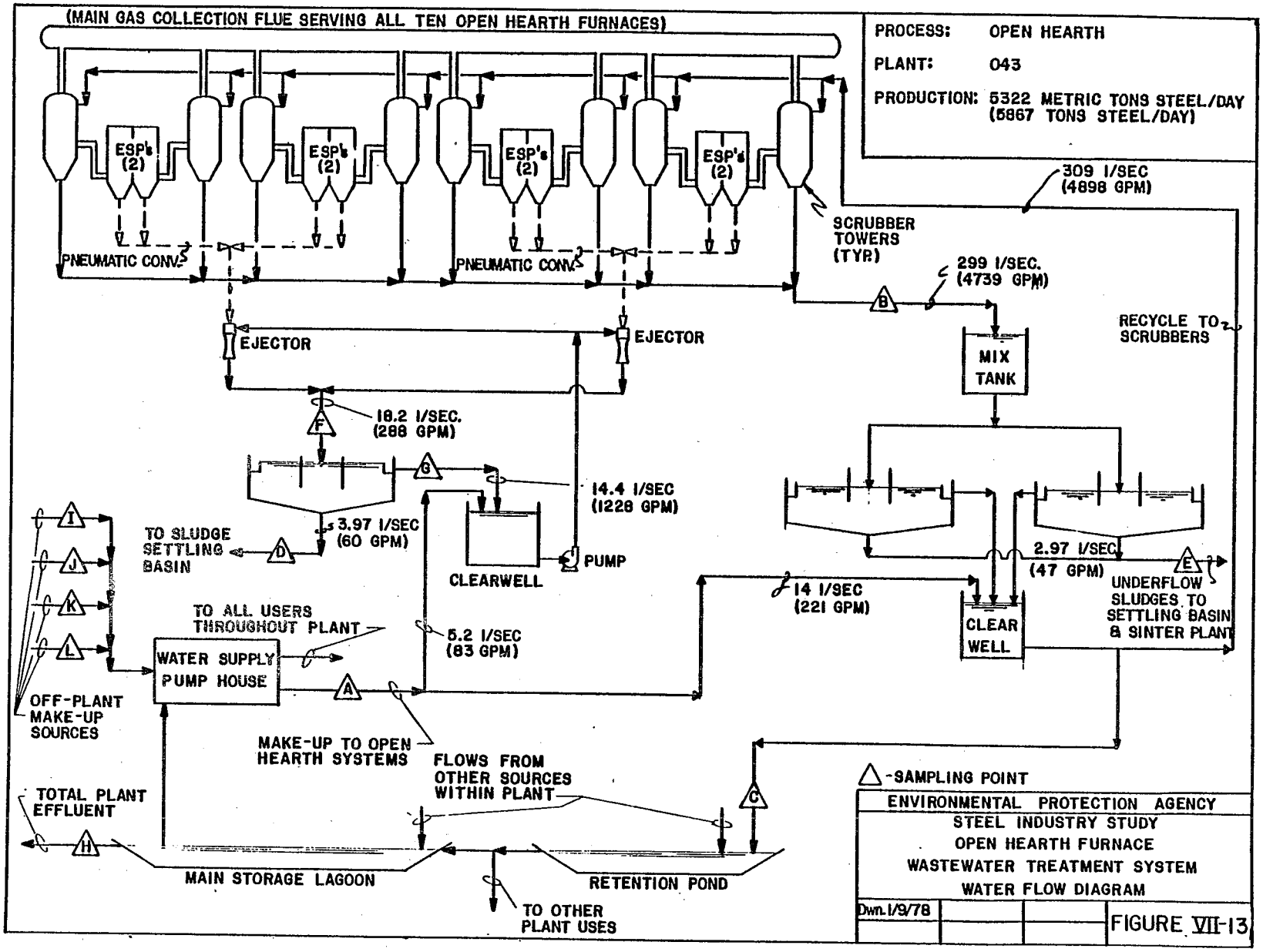
(MAIN GAS COLLECTION FLUE SERVING ALL TEN OPEN HEARTH FURNACES)
PROCESS: OPEN HEARTH
PLANT: 043
PRODUCTION: 5322 METRIC TONS STEEL/DAY (5867 TONS STEEL/DAY)
ESP's (2)
PNEUMATIC CONV.
EJECTOR
SCRUBBER TOWERS (TYP.)
309 l/SEC (4898 GPM)
299 l/SEC. (4739 GPM)
RECYCLE TO SCRUBBERS
MIX TANK
18.2 l/SEC. (288 GPM)
14.4 l/SEC (1228 GPM)
3.97 l/SEC (60 GPM)
TO SLUDGE SETTLING BASIN
CLEARWELL
PUMP
2.97 l/SEC (47 GPM)
14 l/SEC (221 GPM)
UNDERFLOW SLUDGES TO SETTLING BASIN & SINTER PLANT
CLEAR WELL
TO ALL USERS THROUGHOUT PLANT
WATER SUPPLY PUMP HOUSE
5.2 l/SEC (83 GPM)
OFF-PLANT MAKE-UP SOURCES
MAKE-UP TO OPEN HEARTH SYSTEMS
FLOWS FROM OTHER SOURCES WITHIN PLANT
TOTAL PLANT EFFLUENT
MAIN STORAGE LAGOON
RETENTION POND
TO OTHER PLANT USES
△-SAMPLING POINT
ENVIRONMENTAL PROTECTION AGENCY
STEEL INDUSTRY STUDY
OPEN HEARTH FURNACE
WASTEWATER TREATMENT SYSTEM
WATER FLOW DIAGRAM
Dwn. 1/9/78
FIGURE VII-13

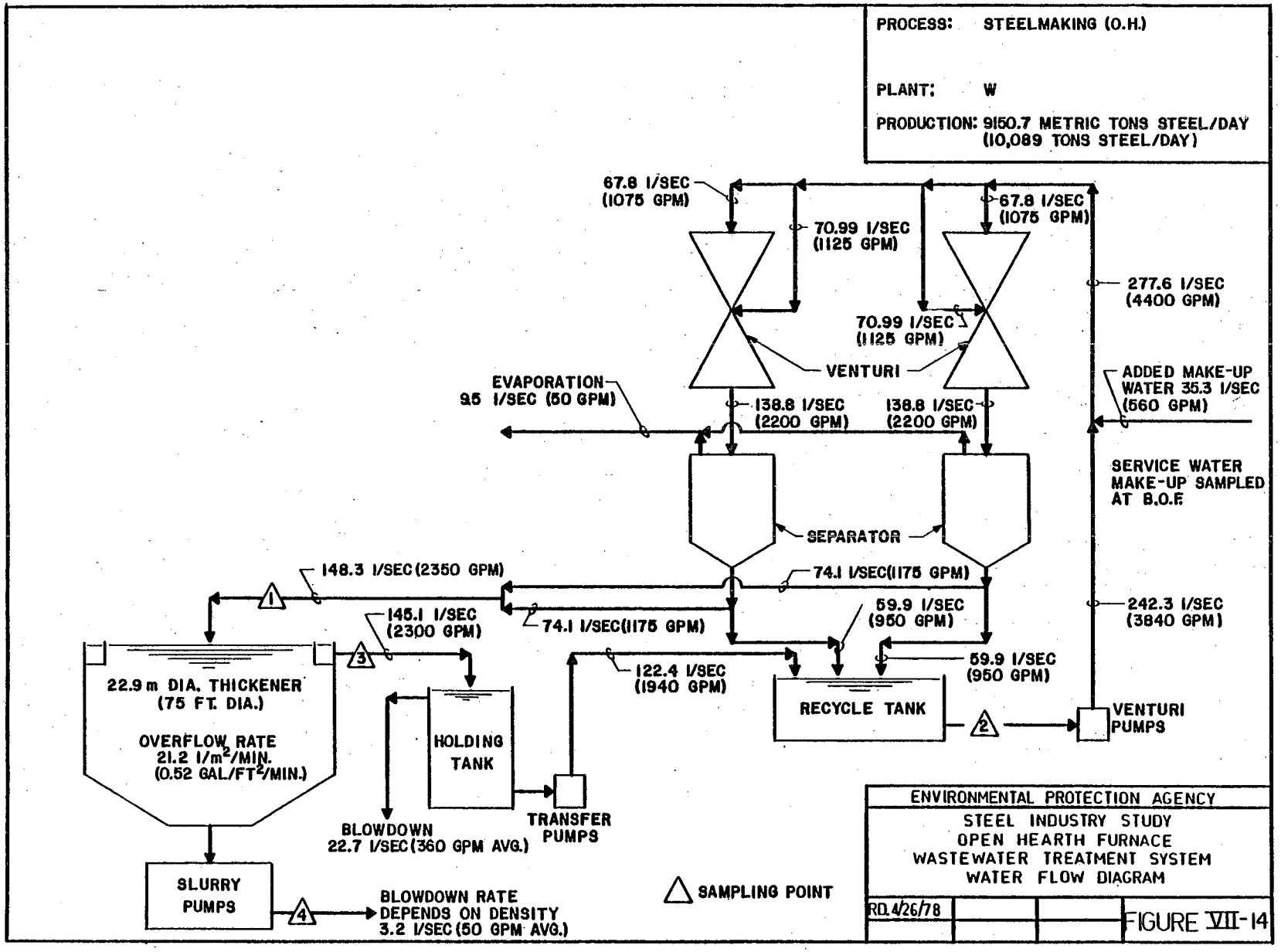
PROCESS: STEELMAKING (O.H.)
PLANT: W
PRODUCTION: 9150.7 METRIC TONS STEEL/DAY (10,089 TONS STEEL/DAY)
67.8 l/SEC (1075 GPM)
70.99 l/SEC (1125 GPM)
67.8 l/SEC (1075 GPM)
277.6 l/SEC (4400 GPM)
70.99 l/SEC (1125 GPM)
VENTURI
EVAPORATION 9.5 l/SEC (50 GPM)
138.8 l/SEC (2200 GPM)
138.8 l/SEC (2200 GPM)
ADDED MAKE-UP WATER 35.3 l/SEC (560 GPM)
SERVICE WATER MAKE-UP SAMPLED AT B.O.F.
SEPARATOR
148.3 l/SEC (2350 GPM)
74.1 l/SEC (1175 GPM)
145.1 l/SEC (2300 GPM)
74.1 l/SEC (1175 GPM)
59.9 l/SEC (950 GPM)
242.3 l/SEC (3840 GPM)
122.4 l/SEC (1940 GPM)
59.9 l/SEC (950 GPM)
22.9 m DIA. THICKENER (75 FT. DIA.)
OVERFLOW RATE 21.2 l/m²/MIN. (0.52 GAL/FT²/MIN.)
HOLDING TANK
RECYCLE TANK
VENTURI PUMPS
BLOWDOWN 22.7 l/SEC (360 GPM AVG.)
TRANSFER PUMPS
SLURRY PUMPS
BLOWDOWN RATE DEPENDS ON DENSITY 3.2 l/SEC (50 GPM AVG.)
SAMPLING POINT
ENVIRONMENTAL PROTECTION AGENCY
STEEL INDUSTRY STUDY
OPEN HEARTH FURNACE
WASTEWATER TREATMENT SYSTEM
WATER FLOW DIAGRAM
RD. 4/26/78
FIGURE VII-14

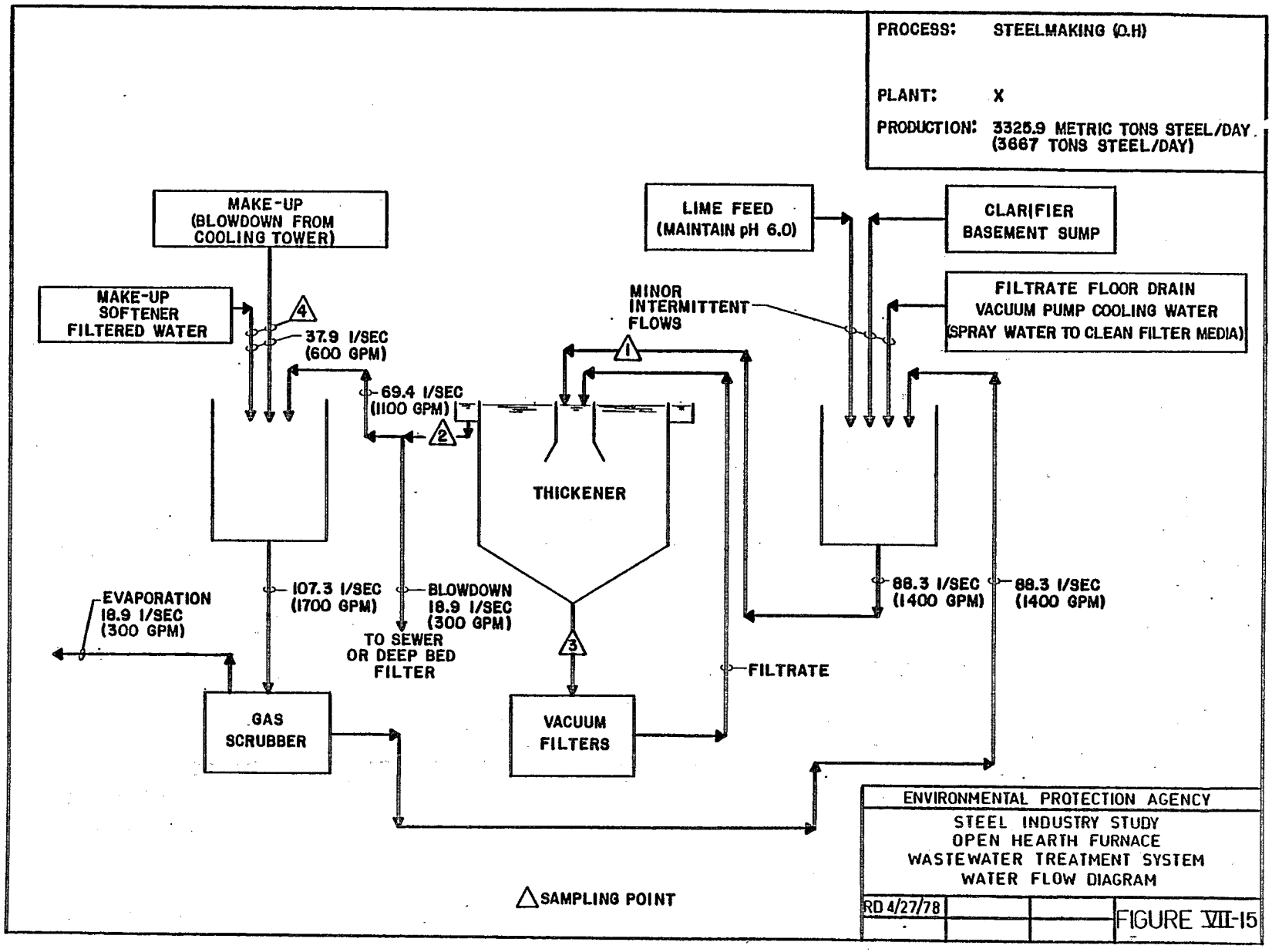
PROCESS: STEELMAKING (O.H)
PLANT: X
PRODUCTION: 3325.9 METRIC TONS STEEL/DAY (3667 TONS STEEL/DAY)
MAKE-UP (BLOWDOWN FROM COOLING TOWER)
MAKE-UP SOFTENER FILTERED WATER
LIME FEED (MAINTAIN pH 6.0)
CLARIFIER BASEMENT SUMP
FILTRATE FLOOR DRAIN VACUUM PUMP COOLING WATER (SPRAY WATER TO CLEAN FILTER MEDIA)
MINOR INTERMITTENT FLOWS
4
37.9 l/SEC (600 GPM)
69.4 l/SEC (1100 GPM)
1
2
THICKENER
107.3 l/SEC (1700 GPM)
BLOWDOWN 18.9 l/SEC (300 GPM)
TO SEWER OR DEEP BED FILTER
EVAPORATION 18.9 l/SEC (300 GPM)
3
FILTRATE
88.3 l/SEC (1400 GPM)
88.3 l/SEC (1400 GPM)
GAS SCRUBBER
VACUUM FILTERS
SAMPLING POINT
ENVIRONMENTAL PROTECTION AGENCY
STEEL INDUSTRY STUDY
OPEN HEARTH FURNACE
WASTEWATER TREATMENT SYSTEM
WATER FLOW DIAGRAM
RD 4/27/78
FIGURE VII-15

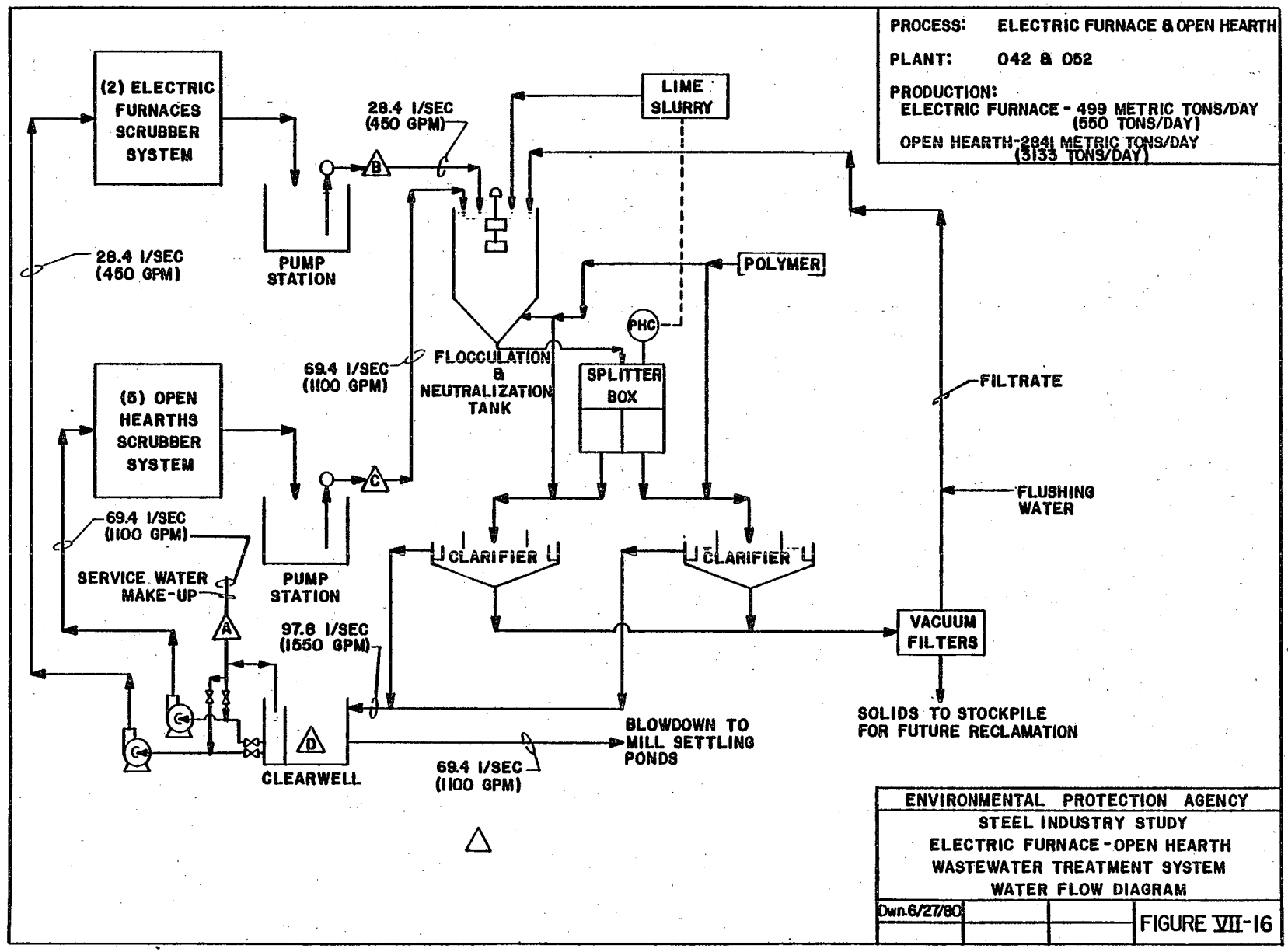
PROCESS: ELECTRIC FURNACE & OPEN HEARTH
PLANT: 042 & 052
PRODUCTION:
ELECTRIC FURNACE - 499 METRIC TONS/DAY (550 TONS/DAY)
OPEN HEARTH-2841 METRIC TONS/DAY (3133 TONS/DAY)
(2) ELECTRIC FURNACES SCRUBBER SYSTEM
(5) OPEN HEARTHS SCRUBBER SYSTEM
28.4 l/SEC (450 GPM)
28.4 l/SEC (450 GPM)
PUMP STATION
PUMP STATION
69.4 l/SEC (1100 GPM)
69.4 l/SEC (1100 GPM)
SERVICE WATER MAKE-UP
97.8 l/SEC (1550 GPM)
CLEARWELL
69.4 l/SEC (1100 GPM)
BLOWDOWN TO MILL SETTLING PONDS
LIME SLURRY
POLYMER
PHC
FLOCCULATION & NEUTRALIZATION TANK
SPLITTER BOX
CLARIFIER
CLARIFIER
FILTRATE
FLUSHING WATER
VACUUM FILTERS
SOLIDS TO STOCKPILE FOR FUTURE RECLAMATION
A
B
C
D
ENVIRONMENTAL PROTECTION AGENCY
STEEL INDUSTRY STUDY
ELECTRIC FURNACE-OPEN HEARTH
WASTEWATER TREATMENT SYSTEM
WATER FLOW DIAGRAM
Dwn.6/27/80
FIGURE VII-16

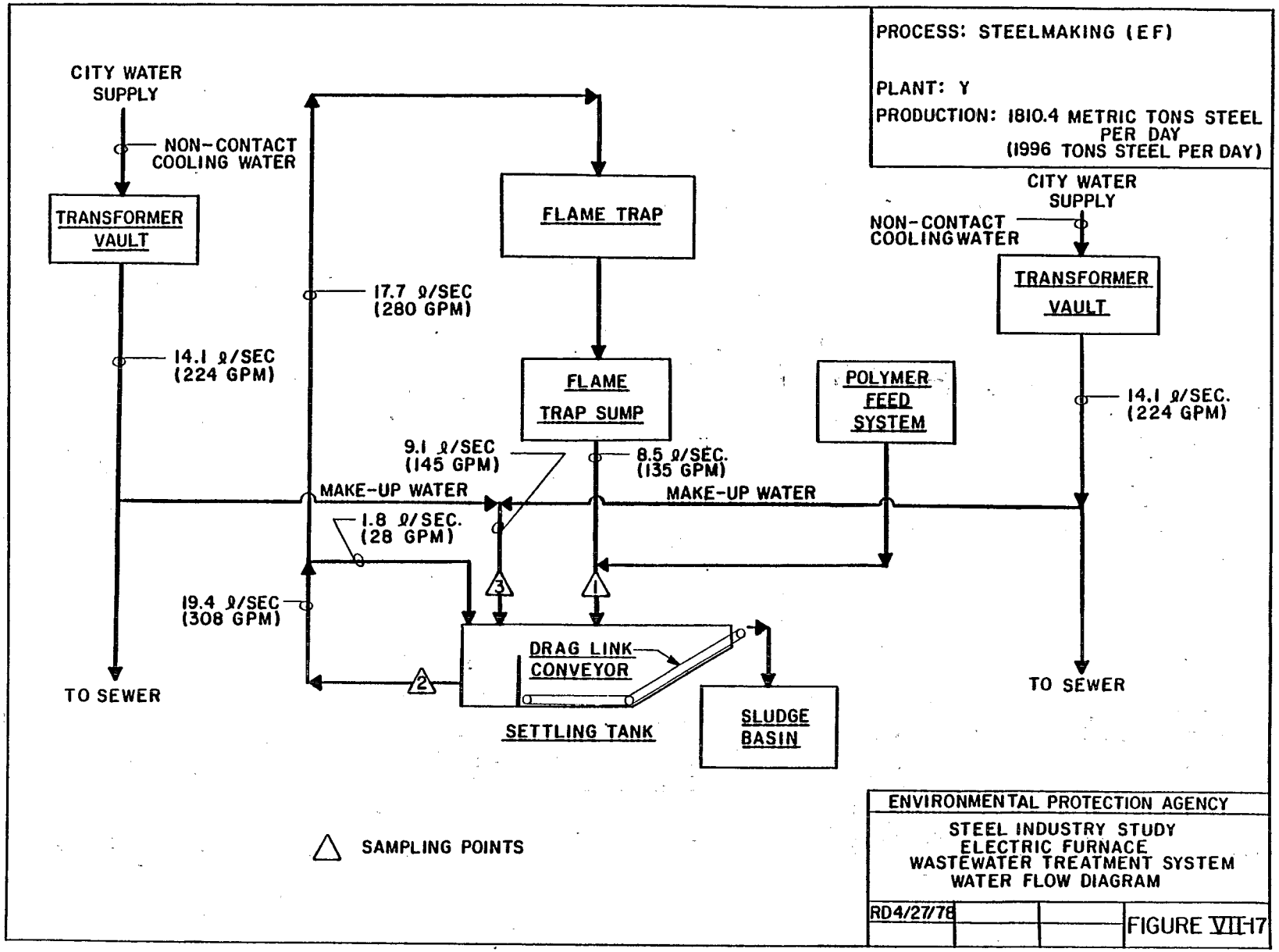
PROCESS: STEELMAKING (EF)
PLANT: Y
PRODUCTION: 1810.4 METRIC TONS STEEL PER DAY
(1996 TONS STEEL PER DAY)
CITY WATER SUPPLY
NON-CONTACT COOLING WATER
TRANSFORMER VAULT
FLAME TRAP
17.7 ℓ/SEC (280 GPM)
14.1 ℓ/SEC (224 GPM)
FLAME TRAP SUMP
POLYMER FEED SYSTEM
9.1 ℓ/SEC (145 GPM)
8.5 ℓ/SEC. (135 GPM)
MAKE-UP WATER
MAKE-UP WATER
1.8 ℓ/SEC. (28 GPM)
19.4 ℓ/SEC (308 GPM)
DRAG LINK CONVEYOR
SETTLING TANK
SLUDGE BASIN
TO SEWER
CITY WATER SUPPLY
NON-CONTACT COOLINGWATER
TRANSFORMER VAULT
14.1 ℓ/SEC. (224 GPM)
TO SEWER
SAMPLING POINTS
ENVIRONMENTAL PROTECTION AGENCY
STEEL INDUSTRY STUDY
ELECTRIC FURNACE
WASTEWATER TREATMENT SYSTEM
WATER FLOW DIAGRAM
RD4/27/78
FIGURE VII-17

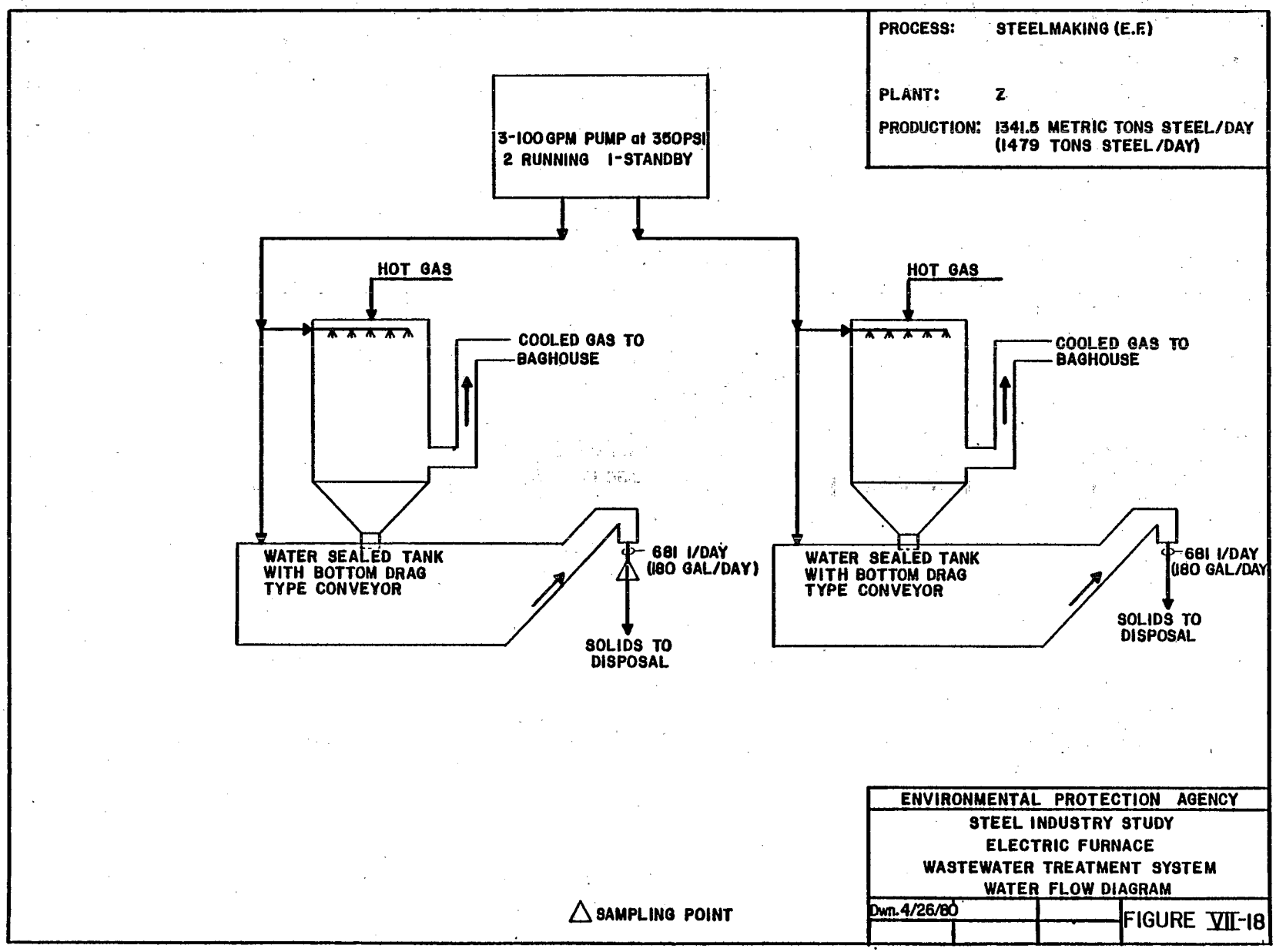
PROCESS: STEELMAKING (E.F.)
PLANT: Z
PRODUCTION: 1341.5 METRIC TONS STEEL/DAY
(1479 TONS STEEL/DAY)
3-100 GPM PUMP at 350PSI
2 RUNNING 1-STANDBY
HOT GAS
COOLED GAS TO BAGHOUSE
WATER SEALED TANK WITH BOTTOM DRAG TYPE CONVEYOR
681 l/DAY (180 GAL/DAY)
SOLIDS TO DISPOSAL
HOT GAS
COOLED GAS TO BAGHOUSE
WATER SEALED TANK WITH BOTTOM DRAG TYPE CONVEYOR
681 l/DAY (180 GAL/DAY)
SOLIDS TO DISPOSAL
SAMPLING POINT
ENVIRONMENTAL PROTECTION AGENCY
STEEL INDUSTRY STUDY
ELECTRIC FURNACE
WASTEWATER TREATMENT SYSTEM
WATER FLOW DIAGRAM
Dwn. 4/26/80
FIGURE VII-18

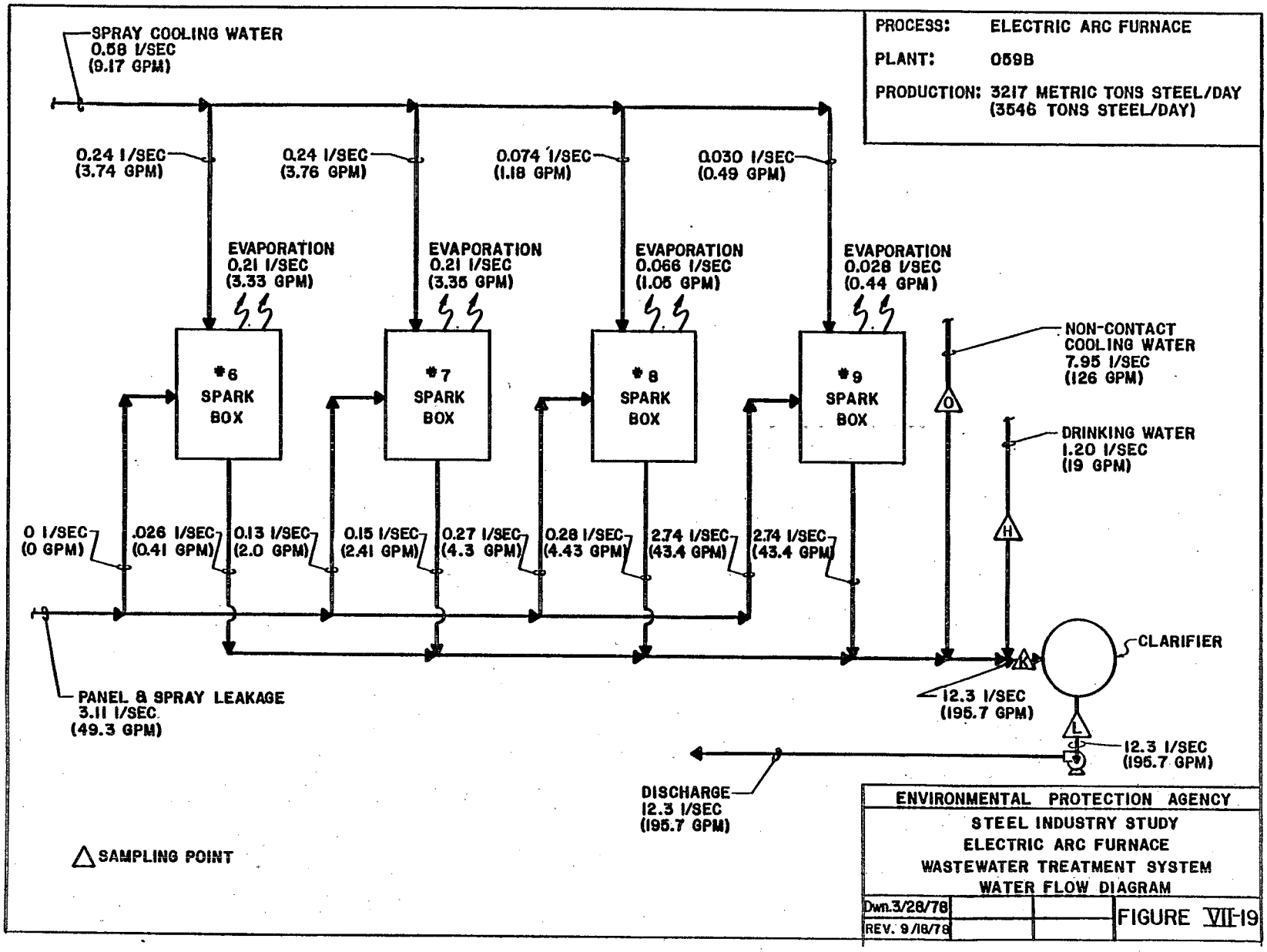
PROCESS: ELECTRIC ARC FURNACE
PLANT: 059B
PRODUCTION: 3217 METRIC TONS STEEL/DAY (3546 TONS STEEL/DAY)
SPRAY COOLING WATER 0.58 l/SEC (9.17 GPM)
0.24 l/SEC (3.74 GPM)
0.24 l/SEC (3.76 GPM)
0.074 l/SEC (1.18 GPM)
0.030 l/SEC (0.49 GPM)
EVAPORATION 0.21 l/SEC (3.33 GPM)
EVAPORATION 0.21 l/SEC (3.35 GPM)
EVAPORATION 0.066 l/SEC (1.05 GPM)
EVAPORATION 0.028 l/SEC (0.44 GPM)
#6 SPARK BOX
#7 SPARK BOX
#8 SPARK BOX
#9 SPARK BOX
NON-CONTACT COOLING WATER 7.95 l/SEC (126 GPM)
DRINKING WATER 1.20 l/SEC (19 GPM)
0 l/SEC (0 GPM)
.026 l/SEC (0.41 GPM)
0.13 l/SEC (2.0 GPM)
0.15 l/SEC (2.41 GPM)
0.27 l/SEC (4.3 GPM)
0.28 l/SEC (4.43 GPM)
2.74 l/SEC (43.4 GPM)
2.74 l/SEC (43.4 GPM)
CLARIFIER
PANEL & SPRAY LEAKAGE 3.11 l/SEC (49.3 GPM)
12.3 l/SEC (195.7 GPM)
12.3 l/SEC (195.7 GPM)
DISCHARGE 12.3 l/SEC (195.7 GPM)
SAMPLING POINT
ENVIRONMENTAL PROTECTION AGENCY
STEEL INDUSTRY STUDY
ELECTRIC ARC FURNACE
WASTEWATER TREATMENT SYSTEM
WATER FLOW DIAGRAM
Dwn.3/28/78
REV. 9/18/78
FIGURE VII-19

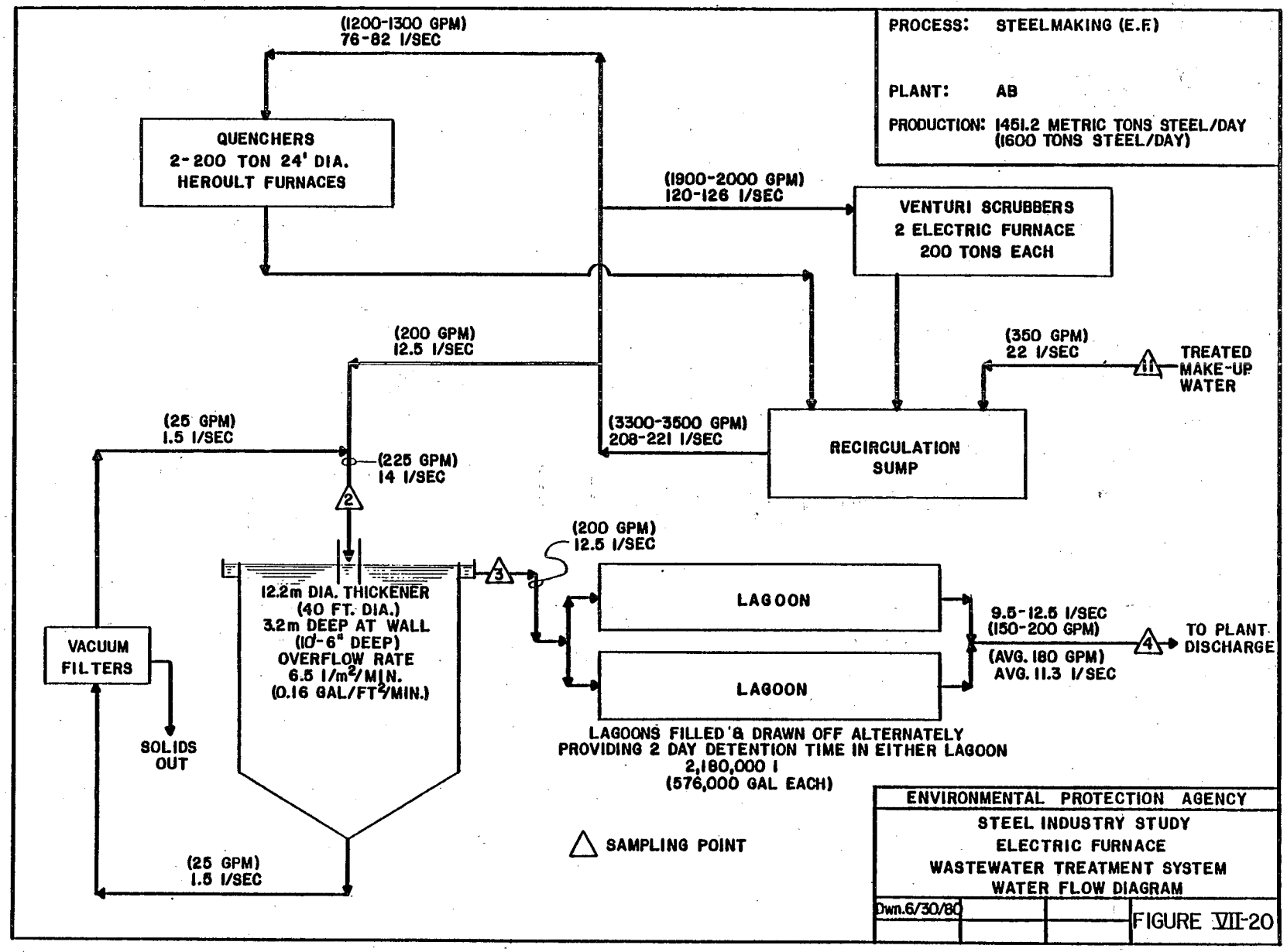
PROCESS: STEELMAKING (E.F)
PLANT: AB
PRODUCTION: 1451.2 METRIC TONS STEEL/DAY (1600 TONS STEEL/DAY)
(1200-1300 GPM) 76-82 l/SEC
QUENCHERS 2-200 TON 24' DIA. HEROULT FURNACES
(1900-2000 GPM) 120-126 l/SEC
VENTURI SCRUBBERS 2 ELECTRIC FURNACE 200 TONS EACH
(200 GPM) 12.5 l/SEC
(350 GPM) 22 l/SEC
1
TREATED MAKE-UP WATER
(25 GPM) 1.5 l/SEC
(3300-3500 GPM) 208-221 l/SEC
RECIRCULATION SUMP
(225 GPM) 14 l/SEC
2
(200 GPM) 12.5 l/SEC
3
12.2m DIA. THICKENER (40 FT. DIA.) 3.2m DEEP AT WALL (10'-6" DEEP) OVERFLOW RATE 6.5 l/m²/MIN. (0.16 GAL/FT²/MIN.)
LAGOON
LAGOON
9.5-12.5 l/SEC (150-200 GPM)
(AVG. 180 GPM) AVG. 11.3 l/SEC
4
TO PLANT DISCHARGE
VACUUM FILTERS
SOLIDS OUT
LAGOONS FILLED & DRAWN OFF ALTERNATELY PROVIDING 2 DAY DETENTION TIME IN EITHER LAGOON 2,180,000 l (576,000 GAL EACH)
SAMPLING POINT
(25 GPM) 1.5 l/SEC
ENVIRONMENTAL PROTECTION AGENCY
STEEL INDUSTRY STUDY
ELECTRIC FURNACE
WASTEWATER TREATMENT SYSTEM
WATER FLOW DIAGRAM
Dwn.6/30/80
FIGURE VII-20

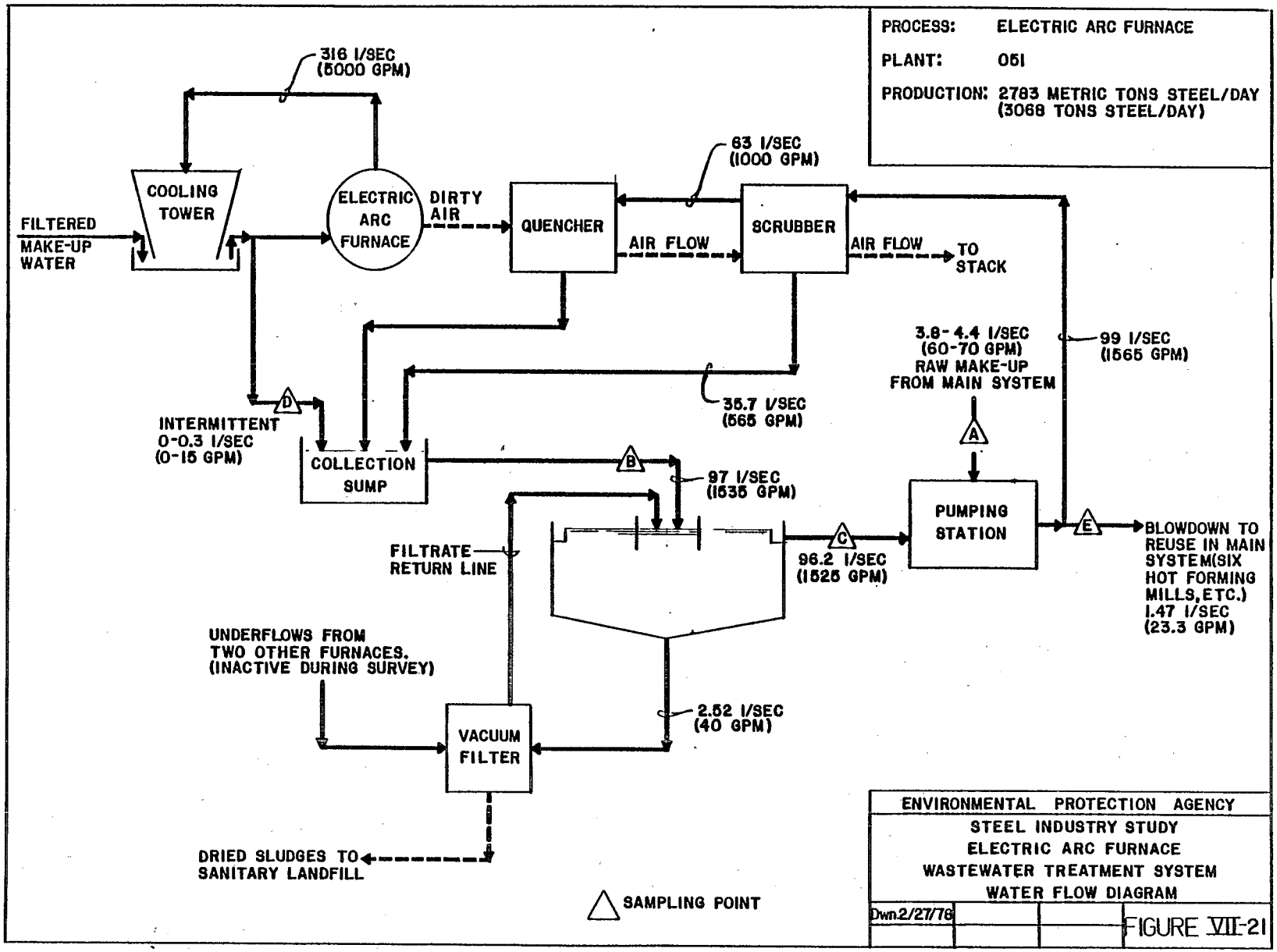
PROCESS: ELECTRIC ARC FURNACE
PLANT: 051
PRODUCTION: 2783 METRIC TONS STEEL/DAY (3068 TONS STEEL/DAY)
316 l/SEC (5000 GPM)
COOLING TOWER
FILTERED MAKE-UP WATER
ELECTRIC ARC FURNACE
DIRTY AIR
QUENCHER
63 l/SEC (1000 GPM)
AIR FLOW
SCRUBBER
AIR FLOW
TO STACK
3.8-4.4 l/SEC (60-70 GPM) RAW MAKE-UP FROM MAIN SYSTEM
99 l/SEC (1565 GPM)
35.7 l/SEC (565 GPM)
INTERMITTENT 0-0.3 l/SEC (0-15 GPM)
COLLECTION SUMP
97 l/SEC (1535 GPM)
PUMPING STATION
FILTRATE RETURN LINE
96.2 l/SEC (1525 GPM)
BLOWDOWN TO REUSE IN MAIN SYSTEM(SIX HOT FORMING MILLS, ETC.) 1.47 l/SEC (23.3 GPM)
UNDERFLOWS FROM TWO OTHER FURNACES. (INACTIVE DURING SURVEY)
2.52 l/SEC (40 GPM)
VACUUM FILTER
DRIED SLUDGES TO SANITARY LANDFILL
SAMPLING POINT
ENVIRONMENTAL PROTECTION AGENCY
STEEL INDUSTRY STUDY
ELECTRIC ARC FURNACE
WASTEWATER TREATMENT SYSTEM
WATER FLOW DIAGRAM
Dwn 2/27/78
FIGURE VII-21

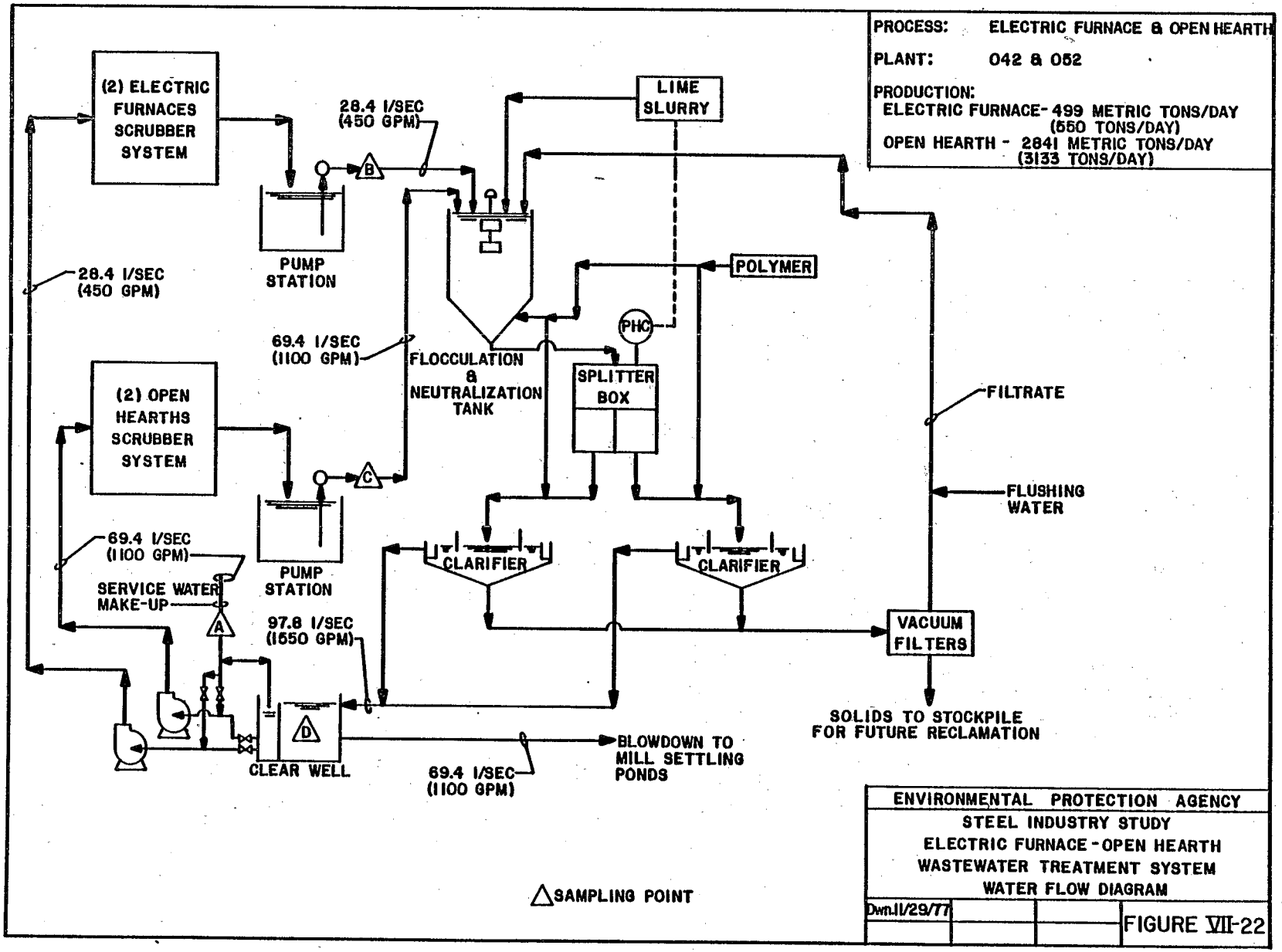
PROCESS: ELECTRIC FURNACE & OPEN HEARTH
PLANT: 042 & 052
PRODUCTION:
ELECTRIC FURNACE- 499 METRIC TONS/DAY (550 TONS/DAY)
OPEN HEARTH - 2841 METRIC TONS/DAY (3133 TONS/DAY)
(2) ELECTRIC FURNACES SCRUBBER SYSTEM
(2) OPEN HEARTHS SCRUBBER SYSTEM
28.4 l/SEC (450 GPM)
PUMP STATION
LIME SLURRY
POLYMER
PHC
FLOCCULATION & NEUTRALIZATION TANK
SPLITTER BOX
69.4 l/SEC (1100 GPM)
FILTRATE
FLUSHING WATER
CLARIFIER
CLARIFIER
SERVICE WATER MAKE-UP
97.8 l/SEC (1550 GPM)
VACUUM FILTERS
CLEAR WELL
BLOWDOWN TO MILL SETTLING PONDS
SOLIDS TO STOCKPILE FOR FUTURE RECLAMATION
SAMPLING POINT
ENVIRONMENTAL PROTECTION AGENCY
STEEL INDUSTRY STUDY
ELECTRIC FURNACE - OPEN HEARTH
WASTEWATER TREATMENT SYSTEM
WATER FLOW DIAGRAM
Dwn.11/29/77
FIGURE VII-22

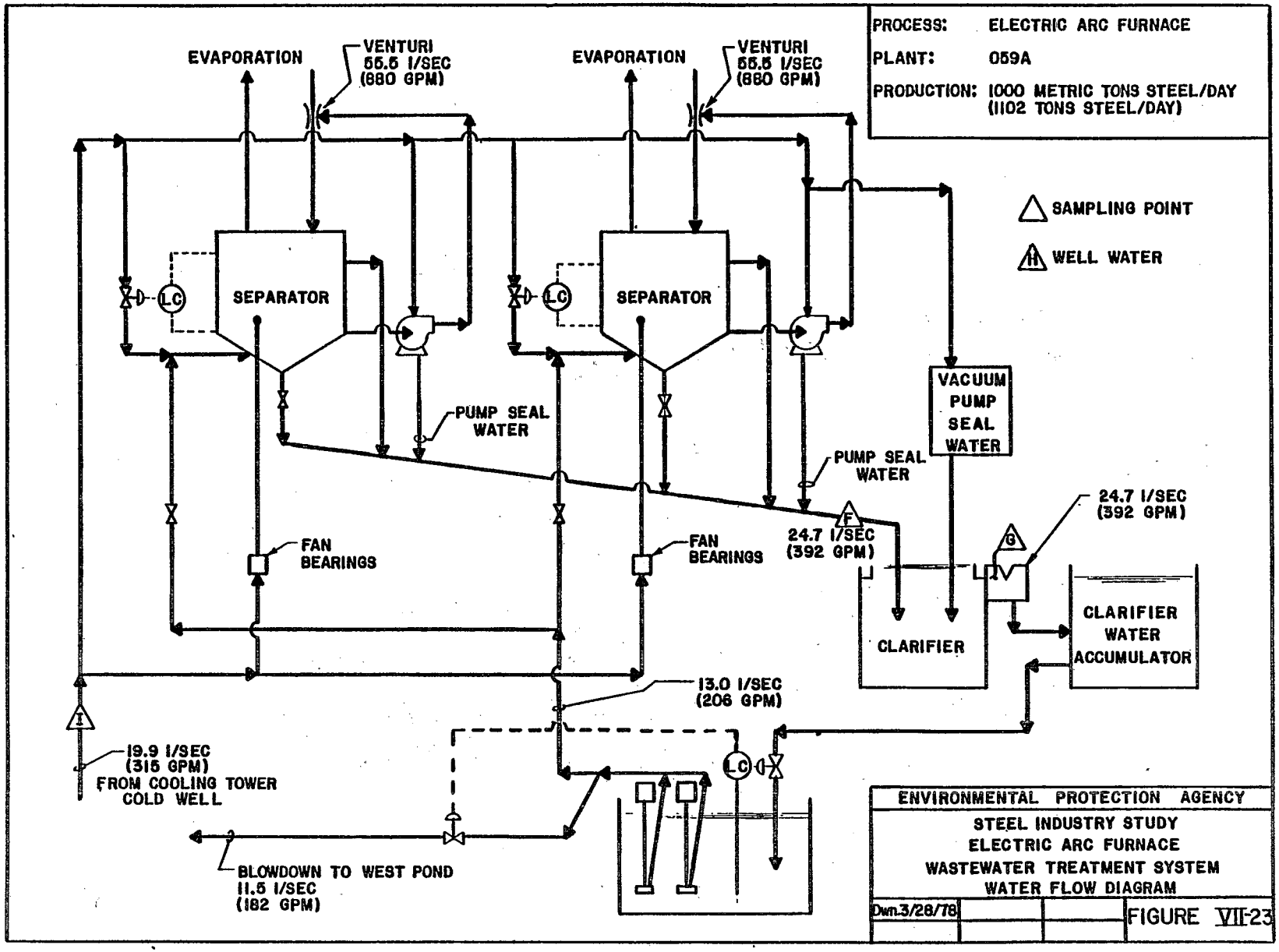
PROCESS: ELECTRIC ARC FURNACE
PLANT: 059A
PRODUCTION: 1000 METRIC TONS STEEL/DAY (1102 TONS STEEL/DAY)
EVAPORATION
VENTURI 55.5 l/SEC (880 GPM)
EVAPORATION
VENTURI 55.5 l/SEC (880 GPM)
SAMPLING POINT
WELL WATER
SEPARATOR
SEPARATOR
LC
LC
PUMP SEAL WATER
PUMP SEAL WATER
VACUUM PUMP SEAL WATER
24.7 l/SEC (392 GPM)
24.7 l/SEC (392 GPM)
FAN BEARINGS
FAN BEARINGS
CLARIFIER
CLARIFIER WATER ACCUMULATOR
13.0 l/SEC (206 GPM)
19.9 l/SEC (315 GPM) FROM COOLING TOWER COLD WELL
BLOWDOWN TO WEST POND 11.5 l/SEC (182 GPM)
ENVIRONMENTAL PROTECTION AGENCY
STEEL INDUSTRY STUDY
ELECTRIC ARC FURNACE
WASTEWATER TREATMENT SYSTEM
WATER FLOW DIAGRAM
Dwn.3/28/78
FIGURE VII-23

STEELMAKING SUBCATEGORY

SECTION VIII

COSTS, ENERGY, AND NON-WATER QUALITY IMPACTS

Introduction

This section presents the incremental costs incurred in the application of the alternative treatment systems for steelmaking operations. The analyses also include the energy requirements, the non-water quality impacts, and the costs associated with the application of the model BPT, BAT, NSPS, PSES, and PSNS alternative treatment systems. In addition, the solids generation rates and the consumptive use of water are addressed.

Actual Costs Incurred by the Industry

The water pollution control costs supplied by the industry for those steelmaking operations sampled during the original and toxic pollutant surveys or surveyed through the D-DCPs are presented in Tables VIII-1 through VIII-6. These costs have been updated from the costs provided by the industry to July 1, 1978 dollars. In some instances, costs reported by the industry represented total expenditures for combined wastewater treatment systems or for entire gas cleaning and wastewater treatment systems. Where possible, the water pollution control costs were separated from the gas cleaning system costs. However, this could not be done in all cases. In those instances where the water pollution control costs could not be separated, they were not used in the cost analysis or comparison.

The usable capital cost data for the steelmaking operations noted above were compared with the Agency's estimated expenditures for those plants. The Agency's estimates are based upon model treatment system costs factored to the production capacity of the actual plants. This comparison demonstrates that the Agency's cost estimates on a subcategory-wide basis are a few percent higher than the actual industry costs and are sufficient to account for site-specific and other incidental costs. A tabulation of the usable cost data reported by the industry (refer to Tables VIII-1 through VIII-6), and the estimated expenditures for these steelmaking operations follows.

Process	Plant No.	Actual Costs	Estimated Costs
BOF - Semi-wet	0432A	$ 692,000	$ 842,700
	0396D	1,917,000	366,800
BOF - Wet-Suppressed Combustion	0060	2,994,000	3,395,600
	0384A	5,875,000	2,233,100
	0684H	3,329,000	3,063,000
BOF - Wet-Open Combustion	0856B	2,848,000	3,321,800
	0868A	7,248,000	4,091,300
Open Hearth - Wet	0864A	2,488,000	3,830,000
	0060	3,331,000	4,299,700
	0112A	1,134,000	4,584,400
	0492A	866,000	2,567,200
EAF - Semi-wet	0432C	590,000	87,300
	0584A	231,000	54,200
EAF - Wet	0060F	586,000	1,772,000
	0492A	406,000	1,199,000
	0612	1,610,000	4,367,700
	0868B	2,163,000	2,377,000
TOTAL		$38,308,000	$42,452,800

The total estimated cost for the steelmaking operations listed above is about 11% higher than the total actual cost, indicating the Agency's cost estimates for the steelmaking subcategory are sufficiently generous to account for site-specific and retrofit costs. Reference is made to Volume I for further verification of the adequacy of the treatment model costs.

Control and Treatment Technologies (C&TT)

Reviews of the treatment components included in the BPT model and BAT alternative treatment systems are presented in Tables VIII-7 through VIII-11. It should be noted that the regulation does not require the installation of the model treatment systems; any treatment systems which achieves the applicable limitations and standards is acceptable. The following items are described in Tables VIII-7 through VIII-11.

1. Description
2. Implementation time
3. Land requirements

Figures VIII-1 through VIII-6 depict the treatment alternatives considered for this subcategory.

Cost, Energy, and Non-water Quality Impacts

The Agency's estimates of the costs, energy requirements, and non-water quality impacts are based upon the alternative treatment systems presented in Sections IX through XIII of this report and are set out in the tables and text of this section.

Estimated Costs for the Installation of Pollution Control Technologies

A. Costs Required to Achieve the BPT Limitations

The Agency developed BPT model treatment systems based upon the average plant capacities (tons/day) of all plants within each steelmaking segment. The applied flow for each model treatment system was determined in the same fashion. The wastewater treatment components and model effluent flows reviewed in Sections IX and X were included to complete the model treatment systems. Unit costs for each treatment model component were also developed. Tables VIII-12 through VIII-17 present the estimated capital and annual costs of the BPT model treatment systems for each steelmaking segment. The investment costs needed to achieve the BPT limitations for the steelmaking segments were determined by applying the treatment component model costs, adjusted for size, to the equipment requirements of each plant. Estimates of expenditures required to bring these operations from July 1, 1981 treatment levels to the model treatment levels were completed to assess the required costs of the BPT effluent limitations to the industry. The estimated investment and annual costs to achieve the BPT limitations for each segment of the three steelmaking subdivisions are presented below:

Subdivision and Segment	Estimated Expenditures (Millions of July 1, 1978 Dollars) Capital Costs In-place	Capital Costs Required	Annual Costs In-Place	Annual Costs Required
BOF-Semi-Wet	$ 2.70	1.61	0.41	0.24
BOF-Wet-Supp. Comb.	15.81	0.0	4.22	0.0
BOF-Wet-Open Comb.	57.20	1.42	13.30	0.34
Open Hearth-Wet	17.78	0.0	3.75	0.0
EAF-Semi-wet	0.79	0.22	0.13	0.03
EAF-Wet	14.48	0.0	2.82	0.0
TOTAL	108.76	3.25	24.63	0.61

B. Costs Required to Achieve the BAT Limitations

The Agency considered three alternative treatment systems for each wet air pollution control system segment. The Agency did not consider additional BAT alternative treatment systems in the semi-wet segments since the BPT model treatment systems provide for zero discharge. The development of the BAT alternative

treatment systems is presented in Section X. The additional investment and annual costs involved in applying each of the BAT alternatives to the BPT model treatment system are presented in Tables VIII-18 through VIII-21. The additional capital requirements for each segment within the steelmaking subdivisions were determined by applying the treatment component model costs, adjusted for size, to the treatment equipment requirements (as of July 1, 1981 treatment levels) of each plant. Total annual costs for BAT in each segment were derived by the same methodology using the model annual cost data.

The estimated capital requirements and annual costs of each BAT alternative for each of the wet steelmaking segments are presented in Table VIII-24.

C. Cost Required to Achieve NSPS

Based upon current trends in the industry, the Agency does not believe that new steelmaking operations will be equipped with semi-wet air pollution control systems. Accordingly, the Agency reserved promulgation of NSPS for semi-wet steelmaking operations.

The Agency developed three NSPS alternative treatment systems for the BOF wet-suppressed combustion, BOF wet-open combustion and EAF wet segments. NSPS costs were not developed for the open hearth segment since new sources in this segment are not anticipated. The NSPS alternative treatment systems for each wet segment are identical to the respective BPT and BAT alternative treatment systems. The NSPS treatment model costs for the wet gas cleaning system segments are presented in Tables VIII-21 through VIII-23. The model sizes used for the BAT alternative treatment systems were retained for use in the NSPS alternative treatment systems, as the average sizes of those plants built in the last decade in each wet segment were within ten percent of the BAT treatment model sizes. The Agency did not estimate total costs for NSPS because projections of new steelmaking operations were not made as part of this study.

D. Costs Required to Achieve the Pretreatment Standards

Pretreatment standards apply to those plants which discharge to POTWs. The pretreatment alternative treatment systems for the semi-wet and wet air pollution control system segments are identical to the respective BPT and BAT alternative treatment systems in each segment (refer to Sections IX and X). Refer to Section XIII for additional information pertaining to pretreatment standards. The pretreatment model costs for the semi-wet systems are the same as the BPT model costs for those systems (Tables VIII-12 and VIII-16). The model costs for the wet BOF, OH, and EAF pretreatment systems are the same as the costs for the BPT and respective BAT treatment systems (Tables VIII-18 through VIII-21). The Agency did not estimate total

costs for PSNS because projections of new steelmaking operations were not made as part of this study.

The estimated investment and annual costs of each PSES alternative for the wet steelmaking segments are presented in Table VIII-25.

Energy Impacts

Moderate amounts of energy will be required by most of the levels of treatment considered for steelmaking operations. The BAT Alternative No. 3 system (vapor compression distillation process) would be a major energy consumer. The major energy expenditures for the selected levels in each segment will be required at the BPT level of treatment while the selected BAT alternative treatment systems require only minor additional energy expenditures. The vacuum filters incorporated in the BPT model treatment systems require significantly greater amounts of energy than any other treatment component in the selected systems. This relationship, in turn, is responsible for the difference in energy expenditures between the BPT and BAT treatment systems in each segment. Energy requirements at NSPS and PSNS will be about the same as those for the corresponding BPT and BAT model systems.

A. Energy Impacts at BPT

The estimated annual energy requirements associated with the BPT limitations for all plants within each segment are presented below along with a comparison with the 57 billion kilowatt hours of electricity used by the steel industry in 1978. Refer to Table VIII-27 for additional details regarding BPT model treatment system and industry-wide energy requirements.

Energy Requirements of BPT Systems

Subdivision & Segment	kwh/yr.	Percent of Total Industry Usage*
BOF-Semi-wet	352,000	0.0006
BOF-Wet-supp. Comb.	5,240,000	0.009
BOF-Wet-Open Comb.	37,752,000	0.066
Open Hearth Wet	6,784,000	0.012
EAF - Semi-wet	84,000	0.0001
EAF - Wet	4,656,000	0.008
Total	54,868,000	0.096

*57 billion kwh in 1978

B. Energy Impacts at BAT

The estimated annual incremental energy requirements needed to achieve the BAT limitations (over BPT requirements) for all plants within each segment are presented below. In reviewing these data, the Agency concluded that the energy requirements associated with the selected alternatives are reasonable when compared to total industry power consumption. The effluent reduction benefits associated with compliance with the limitations and standards justify this energy consumption. Refer to Table VIII-27 for additional details regarding BAT alternative and industry-wide energy requirements.

Energy Requirements of the Selected BAT Systems

Segment	kwh/year	Percent of Total Industry Usage*
BOF - Semi-Wet	-	-
BOF - Wet-Supp. Comb.	76,000	0.0001
BOF - Wet-Open Comb.	160,000	0.0003
Open Hearth - Wet	168,000	0.0003
EAF - Semi-Wet	-	-
EAF - Wet	80,000	0.0001
Total	484,000	0.0008

*57 billion kwh in 1978

C. Energy Impacts at NSPS and Pretreatment

The energy requirements for the semi-wet gas cleaning system model treatment systems are as follows:

Energy Requirements of NSPS, PSES and PSNS MOdels

Segment	kwh per Year
BOF - Semi-wet	44,000
EAF - Semi-wet	28,000

The energy requirements associated with the selected PSES for the wet gas cleaning systems are as follows:

Energy Requirements of PSES Models

Segment	kwh per year	Percent of Total Industry Usage*
BOF - Wet- Supp. Comb.	1,124,000	0.002
Wet-Open Comb.	3,064,000	0.005
EAF - Wet	856,000	0.002
	5,054,000	0.009

*57 billion kwh in 1978

The Agency did not calculate the total impacts for NSPS and PSNS for the industry because projections of the number of new steelmaking operations were not made as part of this study. Refer to Table VIII-27 for additional details regarding PSES alternative and industry-wide and NSPS and PSNS alternative energy requirements.

Non-water Quality Impacts

In general, the non-water quality impacts associated with the selected model treatment systems are minimal. The three impacts which were evaluated are air pollution, solid waste disposal, and water consumption.

A. Air Pollution

The Agency does not expect that adverse air pollution impacts will occur as a result of the use of any of the selected model treatment system components.

B. Solid Waste Disposal

The treatment steps included in the model BPT and alternative BAT treatment systems will generate quantities of solid wastes. These solid wastes consist of the solids removed from the processes, although treatment chemicals will comprise a small portion of the total solid waste load. It should be noted that the solids generated in the process may be reclaimed in sintering or pelletizing operations, and, thus, the impact of solid waste disposal can be reduced. Moreover, nearly all of these solid wastes are generated at the BPT level of treatment. Virtually all steelmaking operations are presently at this level of treatment and disposing of these solid wastes. Consequently, the Agency believes that the incremental effect of this regulation will be minimal. A summary of the solid waste generation rates for the BPT model and selected BAT and PSES treatment systems for all of the plants in each segment of the steelmaking subdivisions follows:

Solid Waste Generation

(Ton/year)

Segment	BPT	BAT	PSES
BOF - Semi-wet	6,400	-	-
Wet-Supp. Comb.	37,750	350	7,620
Wet-Open Comb.	822,380	2,600	63,460
OH - Wet	121,440	1,060	-
EAF - Semi-wet	4,500	-	-
Wet	115,620	252	19,310

The quantities of solid waste generated by the BAT treatment systems are significantly less than the amounts generated at the BPT level.

The estimated quantities of solid wastes generated by the selected NSPS and PSNS models are as follows:

Solid Waste Generation - (Tons Per Year)

Segment	NSPS and PSNS Models
BOF - Semi-wet	800
Wet-Supp. Comb.	7,620
Wet Open Comb.	63,460
OH - Wet	30,625
EAF - Semi-wet	1,500
Wet	19,310

As noted previously in this section, the NSPS, PSES and PSNS models are identical to the corresponding combined BPT and BAT treatment systems. The solid wastes generated at the NSPS and pretreatment levels are of the same nature and present the same possibilities for reuse, and the same disposal requirements, as the solid wastes generated by the BPT and BAT treatment systems. Table VIII-26 presents a summary of the solid waste generation rates for all treatment alternatives.

C. Water Consumption

Evaporative cooling is not included as a treatment step in the steelmaking segments, and those treatment steps which are included are essentially not water consumptive. As a result, the Agency does not believe that there will be any significant

adverse impacts with respect to water consumption at any level of treatment.

Summary of Impacts

In summary, the Agency concludes that the effluent reduction benefits described below for the steelmaking subcategory outweigh the adverse energy and non-water quality environmental impacts:

	Direct Pollutant Discharges (Tons/Year)		
	Raw Waste	BPT	BAT
Flow, MGD	252	28.9	18.9
TSS	1,121,722	1,119	637
Toxic Metals	20,887	116	30
Fluoride	16,895	1,131	565

	Indirect Pollutant Discharges (Tons/Year)	
	Raw Waste	PSES
Flow, MGD	21.2	1.6
TSS	91,716	52.5
Toxic Metals	1,333	2.8
Fluoride	704	45.0

The Agency also concludes that the effluent reduction benefits associated with compliance with new source standards (NSPS, PSNS) outweigh the adverse energy and non-water quality environmental impacts.

TABLE VIII-1

EFFLUENT TREATMENT COSTS
BASIC OXYGEN FURNACE - SEMI-WET

(All costs are expressed in July, 1978 dollars.)

Plant Code	R	U
Reference Code	0432A	0396D
	Original Survey	Original Survey
Initial Investment	$692,000	$1,917,000
Annual Costs		
Capital[1]	$ 62,211	$ 172,388
Operation and Maintenance	683,508	Not Available
Energy and Power	Incl.	Not Available
Other (sludge, etc.)	Not Available	Not Available
TOTAL	$745,719	$ 172,338
$/Ton	0.239	0.159
$/1000 Gal. Treated	1.84	0.219

(1) Capital was calculated by using the following formula: (0.0899) x (Initial Investment).

TABLE VIII-2

EFFLUENT TREATMENT COSTS
BASIC OXYGEN FURNACE - WET-SUPPRESSED COMBUSTION

(All costs are expressed in July, 1978 dollars.)

Plant Code	S	032		034		038	-
Reference Code	0060	0384A		0856N		0684F	0684H
	Original Survey	Toxics Survey	D-DCP	Toxics Survey	D-DCP	Toxics Survey	D-DCP
Initial Investment	$2,994,000	$5,907,000	$5,875,000	$13,264,000(2)	$13,390,000(2)	$9,690,000(3)	$3,329,000
Annual Costs							
Capital(1)	$ 269,161	$ 531,039	$ 528,162	-	-	-	$ 299,277
Operation and Maintenance	124,939	474,418	519,633	-	-	-	247,878
Energy, Power, Chemicals, etc.	91,361	400,979	374,247	-	-	-	29,657
Other (Sludge, etc.)	-	-	158,493	-	-	-	-
Other (equipment rental, contract labor, freight, etc.)	-	-	43,056	-	-	-	26,850
TOTAL	$ 485,461	$1,406,436	$1,623,591	-	-	-	$ 603,662
$/Ton	0.209	0.875	0.656	-	-	-	0.259
$/1000 Gal. Treated	0.204	0.595	2.32	-	-	-	1.01

(1) Capital was calculated by using the following formula: (0.0899) x (Initial Investment).
(2) Costs include expenditures for hoods and gas cleaning systems. Expenditures for water pollution control facilities cannot be separated.
(3) Treatment is provided primarily in a central treatment system. This investment cost represents the estimated portion of the total cost required by the BOF process. A detailed estimate could not be obtained.

TABLE VIII-3

EFFLUENT TREATMENT COSTS
BASIC OXYGEN FURNACE - WET-OPEN COMBUSTION

(All costs are expressed in July, 1978 dollars)

Plant Code	T	V		031	
Reference Code	0112A	0584F		0020B	
	Original Survey	Original Survey	D-DCP	Toxics Survey	D-DCP
Initial Investment Cost	-	9,313,000(1)	9,723,000(1)	829,000	*
Annual Costs					
Capital(2)	-	-	-	$ 74,527	*
Operation & Maintenance	13,943	-	-	143,891	*
Energy & Power, Chemicals, etc.	222,892	-	-	22,145	*
TOTAL	236,385	-	-	240,563	*
$/Ton	-	-	-	0.308	*
$/1000 Gal Treated	-	-	-	0.291	*

Plant Code	033	035	036	-	-
Reference Code	0856B	0868A	0112D	0724A	0860B
	Toxics Survey	Toxics Survey	Toxics Survey	D-DCP	D-DCP
Initial Investment Cost	2,848,000	7,248,000	16,827,000(3)	-	19,615,000(4)
Annual Cost					
Capital(2)	$ 256,035	$ 651,595	-	-	-
Operation & Maintenance	457,884	607,597	-	-	-
Energy & Power, Chemicals, etc.	1,027,474	264,504	-	-	-
TOTAL	1,741,393	1,523,696	-	-	-
$/Ton	0.610	0.651	-	-	-
$/1000 Gal/Treated	2.53	0.586	-	-	-

(1) Costs, as presented, represent expenditures for the entire BOF shop. Wastewater treatment costs could not be separated.
(2) Capital was calculated by using the following formula:
(0.0899) x (initial investment)
(3) BOF wastewater treatment expenditures could not be determined because the data, as reported, represented capital expenditures for wastewater treatment and/or gas cleaning facilities.
(4) The data, as provided, represents combined expenditures for gas cleaning (hoods, etc.) and wastewater treatment facilities.
*: Confidential information.
-: Not available.

TABLE VIII-4

EFFLUENT TREATMENT COSTS
OPEN HEARTH FURNACES

(All costs are expressed in July, 1978 dollars.)

Plant Code	W		X		042	043	
Reference No.	0112A		0060		0492A	0864A	
	Original Survey	D-DCP(6)	Original Survey	D-DCP	Toxics Survey	Toxics Survey	D-DCP
Initial Investment	1,685,000	1,134,000	3,331,000	3,323,000	866,000(6)	2,212,000	2,488,000
Annual Costs							
Capital(1)	151,482	-	299,457	298,738	77,853	198,859	
Cost of Capital	-	560,013(2)	-		-	-	(4)
Depreciation	-	236,592(3)	-		-	-	
Operation and Maintenance	13,184	856,353	239,681	(4)	187,769	846,090	
Energy and Power	223,098	494,134	10,712		66,332	590,604	
Sludge Handling	-	6,920	-		-	-	
Chemical Costs	-	-	-		-	-	
TOTAL	387,764	2,154,012	549,850		331,954	1,635,553	
$/Ton	0.098	0.545	0.274		0.237	0.684	
$/1000 Gal. Treated	0.185	1.025	0.125		1.40	0.684	

(1) Capital was calculated by using the following formula: (0.0899) x (Initial Investment).
(2) Capital recovery based on 15 year life at 10% cost of capital.
(3) Straight line depreciation over 18 year life.
(4) Annual costs were not reported.
(5) Annual costs include the costs for 2 High energy scrubber systems which cannot be separated from the total.
(6) The costs for this plant were obtained by apportioning the combined open hearth and EAF wastewater treatment costs.

TABLE VIII-5

EFFLUENT TREATMENT COSTS
ELECTRIC ARC FURNACES - SEMI-WET

(All costs are expressed in July, 1978 dollars.)

Plant Code	Y	Z
Reference Code	0432C	0584A
	Original Survey	Original Survey
Initial Investment	$590,000	$231,000
Annual Costs		
Capital[1]	$ 53,041	$ 20,767
Operation and Maintenance	9,682	5,356
Energy and Power	27,295	1,030
TOTAL	$ 90,018	$ 27,153
$/Ton	0.126	0.048
$/1000 Gal. Treated	0.452	*

(1) Capital was calculated by using the following formula: (0.0899) x (initial investment).

*: Cannot be determined, as the flow to the treatment system could not be measured.

TABLE VIII-6

EFFLUENT TREATMENT COSTS
ELECTRIC ARC FURNACES - WET

(All costs are expressed in July, 1978 dollars.)

Plant Code	AA/059A[1]	AB	051		052	
Reference Code	0060F	0868B	0612		0492A	0060D
	Original Survey	Original Survey	Toxics Survey	D-DCP	Toxics Survey	D-DCP
Initial Investment	586,000	2,163,000	1,610,000	10,000[2]	406,000[4]	4,347,000[5]
Annual Costs						
Capital[3]	52,681	194,454	144,739	-	36,499	-
Operation and Maintenance	154,397	595,134	120,510	-	76,632	-
Energy and Power	Incl.	-	20,600	-	27,089	-
TOTAL	207,078	789,588	285,849	-	140,220	-
$/Ton	0.513	1.35	0.400	-	0.745	-
$/1000 Gal. Treated	0.226	6.67	0.169	-	0.589	-

(1) Cost data was obtained during the original guidelines survey. No cost data was provided for the toxic pollutant survey.
(2) This figure represents the company's estimate of water pollution control costs. The company reported that operating costs could not be separated between water and air pollution control costs.
(3) Capital was calculated by using the following formula: (0.0899) x (Initial Investment).
(4) The costs for this plant were obtained by apportioning the combined open hearth and EAF wastewater treatment costs.
(5) The data presented in the D-DCP response represents an apportionment performed by the respondent, of a combined treatment system. The respondent stated that these costs would not be representative of an EAF wastewater treatment system.

TABLE VIII-7

CONTROL AND TREATMENT TECHNOLOGIES
STEELMAKING SUBCATEGORY
BASIC OXYGEN FURNACE - SEMI-WET SEGMENT

C&TT Step	Description	Implementation Time (Months)	Land Usage (ft^2)
A	DRAGOUT TANK - As a result of gravity sedimentation, this C&TT step provides substantial reductions in the levels and loads of suspended solids and associated particulate pollutants. The accumulated solids are removed by the dragout mechanism.	6 to 8	580
B	FLOCCULATION WITH POLYMER - This step enhances the suspended solids and particulate pollutant removal performance in Step A.	6	625
C	RECYCLE - All of the dragout tank effluent is returned to the process.	12 to 14	625

TABLE VIII-8

CONTROL AND TREATMENT TECHNOLOGIES
STEELMAKING SUBCATEGORY
BASIC OXYGEN FURNACE - WET SEGMENTS

C&TT Step	Description	Implementation Time (Months)	Land Usage (ft^2)
A	THICKENER - This step provides significant reductions in the levels and loads of suspended solids and of those metals which are in the particulate form.	15 to 18	25,000(1) 26,500(2)
B	FLOCCULATION WITH POLYMER - This step enhances the suspended solids and particulate pollutant removal performance of Step A.	6	625(1)(2)
C	VACUUM FILTER - Vacuum filters are used to dewater, and thereby reduce the volume and mass, of the sludges removed from the sedimentation steps. The filtrate is returned to the treatment system influent.	15 to 18	2,800(1) 23,000(2)
D	RECYCLE - Ninety-five percent of the suppressed combustion treatment system thickener effluent and ninety percent of the open combustion treatment system thickener effluent are returned to the process. This step thus reduces the pollutant load discharged from these processes.	12 to 14	625(1)(2)
E	NEUTRALIZATION WITH ACID - The pH's of the BPT treatment system effluents are monitored and adjusted as necessary to assure that the treated effluent pH's are within the neutral range.	8 to 10	625(1)(2)

TABLE VIII-8
CONTROL AND TREATMENT TECHNOLOGIES
STEELMAKING SUBCATEGORY
BASIC OXYGEN FURNACE - WET SEGMENTS
PAGE 2

C&TT Step	Description	Implementation Time (Months)	Land Usage (ft^2)
F	PRESSURE FILTRATION - Filters provide additional suspended solids and particulate pollutant removal.	15 to 18	625(1)(2)
G	PRECIPITATION WITH LIME - Lime is added in order to provide additional toxic metals removal. This enhanced removal results from the precipitation of dissolved metals as hydroxide.	12	625(1)(2)
H	INCLINED PLATE SEPARATOR - This component provides additional suspended solids and particulate pollutant removal capability. This additional removal capability results from the enhanced sedimentation performance of this component.	10 to 12	200(1) 500(2)
I	NEUTRALIZATION WITH ACID - This is a BPT treatment system model C&TT step which is relocated for use in BAT Alternatives Nos. 1 and 2.	-	-
J	EVAPORATION - The effluent from the BPT treatment system model is delivered to a vapor decompression evaporation system. This system produces a distillate quality effluent and crystalline solids.	18 to 20	7,500(1) 10,000(2)
K	RECYCLE - The effluent of Step J is returned to the process as a makeup water supply.	12 to 14	625(1)(2)

(1) Land usages for the Basic Oxygen Furnace - Wet-Suppressed Combustion treatment models.
(2) Land usages for the Basic Oxygen Furnace - Wet-Open Combustion treatment models.

TABLE VIII-9

CONTROL AND TREATMENT TECHNOLOGIES
STEELMAKING SUBCATEGORY
OPEN HEARTH FURNACE - WET SUBDIVISION

C&TT Step	Description	Implementation Time (Months)	Land Usage (ft^2)
A	THICKENER - This step provides significant reductions in the levels and loads of suspended solids and of those metals which are in the particulate form.	15 to 18	30,000
B	FLOCCULATION WITH POLYMER - This step enhances the suspended solids and particulate pollutant removal performance of Step A.	6	625
C	NEUTRALIZATION WITH LIME - Lime is added to the typically acidic open hearth furnace process wastewaters to adjust the wastewater pH to the neutral range (6.0 to 9.0). In addition to assuring the discharge of an effluent in the neutral pH range, this step also removes dissolved toxic metals load as a result of the formation (and subsequent sedimentation) of metallic hydroxide precipatates.	12	625
D	VACUUM FILTER - Vacuum filters are used to dewater, and thereby reduce the volume and mass, of the sludges removed from the sedimentation steps. The filtrate is returned to the treatment system influent.	15 to 18	12,000
E	RECYCLE - Ninety-four percent of the thickener effluent is returned to the process. This step thus serves to reduce the discharged pollutant load.	12 to 14	625
F	PRESSURE FILTRATION - Filters provide additional suspended solids and particulate pollutant removal.	15 to 18	625

TABLE VIII-9
CONTROL AND TREATMENT TECHNOLOGIES
STEELMAKING SUBCATEGORY
OPEN HEARTH FURNACE - WET SUBDIVISION
PAGE 2

C&TT Step	Description	Implementation Time (Months)	Land Usage (ft^2)
G	PRECIPITATION WITH LIME - Lime is added in order to provide additional toxic metals removal. This enhanced removal results from the precipitation of dissolved metals as hydroxides.	12	625
H	INCLINED PLATE SEPARATOR - This component provides additional suspended solids and particulate pollutant removal capability. This additional removal capability results from the enhanced sedimentation performance of this component.	10 to 12	370
I	NEUTRALIZATION WITH ACID - The pH of the BAT Alternative No. 2 treatment model system effluent is monitored and adjusted as necessary to assure that the treated effluent pH is within the neutral range.	8 to 10	625
J	EVAPORATION - The effluent from the BPT treatment system model is delivered to a vapor decompression evaporation system. This system produces a distillate quality effluent and crystalline solids	18 to 20	8,000
K	RECYCLE - The effluent of Step J is returned to the process as a makeup water supply.	12 to 14	625

TABLE VIII-10

CONTROL AND TREATMENT TECHNOLOGIES
STEELMAKING SUBCATEGORY
ELECTRIC ARC FURNACE - SEMI-WET SEGMENT

C&TT Step	Description	Implementation Time (Months)	Land Usage (ft^2)
A	DRAGOUT TANK - As a result of gravity sedimentation, this C&TT step provides substantial reductions in the levels and loads of suspended solids and associated particulate pollutants. The accumulated solids are removed by the dragout mechanism.	6 to 8	805
B	FLOCCULATION WITH POLYMER - This step enhances the suspended solids and particulate pollutant removal performance in Step A.	6	625
C	RECYCLE - All of the dragout tank effluent is returned to the process.	12 to 14	625

TABLE VIII-11

CONTROL AND TREATMENT TECHNOLOGIES
STEELMAKING SUBCATEGORY
ELECTRIC ARC FURNACE - WET SEGMENT

C&TT Step	Description	Implementation Time (Months)	Land Usage (ft^2)
A	THICKENER - This step provides significant reductions in the levels and loads of suspended solids and of those metals which are in the particulate form.	15 to 18	10,650
B	FLOCCULATION WITH POLYMER - This step enhances the suspended solids and particulate pollutant removal performance of Step A.	6	625
C	VACUUM FILTER - Vacuum filters are used to dewater, and thereby reduce the volume and mass of the sludges removed from the sedimentation steps. The filtrate is returned to the treatment system influent.	15 to 18	7,200
D	RECYCLE - Ninety-five percent of the thickener effluent is returned to the process. This step thus serves to reduce the discharged pollutant load.	12 to 14	625
E	PRESSURE FILTRATION - Filters provide additional suspended solids and particulate pollutant removal.	15 to 18	625
F	PRECIPITATION WITH LIME - Lime is added in order to provide additional toxic metals removal. This enhanced removal results from the precipitation of dissolved metals as hydroxides.	12	625

TABLE VIII-11
CONTROL AND TREATMENT TECHNOLOGIES
STEELMAKING SUBCATEGORY
ELECTRIC ARC FURNACE - WET SEGEMENT
PAGE 2

C&TT Step	Description	Implementation Time (Months)	Land Usage (ft^2)
G	INCLINED PLATE SEPARATOR - This component provides additional suspended solids and particulate pollutant removal capability. This additional removal capability results from the enhanced sedimentation performance of this component.	10 to 12	100
H	NEUTRALIZATION WITH ACID - The pH of the BAT Alternative No. 2 treatment model system effluent is monitored and adjusted as necessary to assure that the treated effluent pH is within the neutral range.	8 to 10	625
I	EVAPORATION - The effluent from the BPT treatment system model is delivered to a vapor decompression evaporation system. This system produces a distillate quality effluent and crystalline solids.	18 to 20	6,000
J	RECYCLE - The effluent of Step I is returned to the process as a makeup water supply.	12 to 14	625

TABLE VIII-12

BPT/NSPS/PSES/PSNS TREATMENT MODEL COSTS: BASIS 7/1/78 DOLLARS

Subcategory	: Steelmaking	Model Size-TPD :	5,300
Subdivision	: Basic Oxygen Furnace	Oper. Days/Year:	365
	: Semi-Wet	Turns/Day :	3

C&TT Step	A	B	C	Total
Investment ($ x 10^{-3})	184.9	31.0	374.1	590.0
Annual Costs ($ x 10^{-3})				
Capital	16.6	2.8	33.6	53.0
Operation & Maintenance	6.5	1.1	13.1	20.7
Land	0.1		0.1	0.2
Sludge Disposal	4.0			4.0
Hazardous Waste Disposal				
Oil Disposal				
Energy and Power		1.1		1.1
Steam				
Waste Acid				
Crystal Disposal				
Chemical		21.0		21.0
TOTAL	27.2	26.0	46.8	100.00
Credits				
Scale				
Sinter				
Oil				
Acid Recovery				
TOTAL CREDITS				
NET TOTAL	27.2	26.0	46.8	100.00

KEY TO C&TT STEPS

A: Drag Tank
B: Flocculation With Polymer
C: Recycle

TABLE VIII-13

BPT TREATMENT MODEL COSTS: BASIS 7/1/78 DOLLARS

Subcategory : Steelmaking
Subdivision : Basic Oxygen Furnace
: Wet-Suppressed Combustion

Model Size-TPD : 7,400
Oper. Days/Year: 365
Turns/Day : 3

C&TT Step	A	B	C	D	E	Total
Investment ($ x 10^{-3})	1,772.0	35.0	559.0	756.0	48.0	3,170.0
Annual Costs ($ x 10^{-3})						
Capital	159.3	3.1	50.3	68.0	4.3	285.0
Operation & Maintenance	62.0	1.2	19.6	26.5	1.7	111.0
Land	1.1	0.1	0.3		0.1	1.6
Sludge Disposal			337.6			337.6
Hazardous Waste Disposal						
Oil Disposal						
Energy and Power	5.7	0.7	19.1		0.7	26.2
Steam						
Waste Acid						
Crystal Disposal						
Chemical		81.5			3.0	84.5
TOTAL	228.1	86.6	426.9	94.5	9.8	845.9
Credits						
Scale						
Sinter						
Oil						
Acid Recovery						
TOTAL CREDITS						
NET TOTAL	228.1	86.6	426.9	94.5	9.8	845.9

KEY TO C&TT STEPS

A: Thickening
B: Polymer Addition
C: Vacuum Filtration
D: Recycle
E: Neutralization With Acid

TABLE VIII-14

BPT TREATMENT MODEL COSTS: BASIS 7/1/78 DOLLARS

Subcategory : Steelmaking
Subdivision : Basic Oxygen Furnace
: Wet-Open Combustion

Model Size-TPD : 9,100
Oper. Days/Year: 365
Turns/Day : 3

C&TT Step	A	B	C	D	E	Total
Investment ($ x 10^{-3})	2,243.0	66.0	1,414.7	893.0	121.0	4,737.7
Annual Cost ($ x 10^{-3})						
Capital	201.6	5.9	127.2	80.3	10.9	425.9
Operation & Maintenance	78.5	2.3	49.5	31.3	4.2	165.8
Land	1.5		1.4	0.1	0.1	3.1
Sludge Disposal			316.3			316.3
Hazardous Waste Disposal						
Oil Disposal						
Energy and Power	3.3	1.6	65.3		2.4	72.6
Steam						
Waste Acid						
Crystal Disposal						
Chemical		109.7			9.1	118.8
TOTAL	284.9	119.5	559.7	111.7	26.7	1,102.5
Credits						
Scale						
Sinter						
Oil						
Acid Recovery						
TOTAL CREDITS						
NET TOTAL	284.9	119.5	559.7	111.7	26.7	1,102.5

KEY TO C&TT STEPS

A: Thickening
B: Flocculation With Polymer
C: Vacuum Filtration
D: Recycle
E: Acid Addition

TABLE VIII-15

BPT TREATMENT MODEL COSTS: BASIS 7/1/78 DOLLARS

Subcategory : Steelmaking
Subdivision : Open Hearth
: Wet

Model Size-TPD : 6,700
Oper. Days/Year: 365
Turns/Day : 3

C&TT Step	A	B	C	D	E	Total
Investment ($ x 10^{-3})	2,423.8	71.3	444.1	648.8	943.2	4,531.2
Annual Costs ($ x 10^{-3})						
Capital	217.9	6.4	39.9	58.3	84.8	407.3
Operation & Maintenance	84.8	2.5	15.5	22.7	33.0	158.5
Land	1.7		0.1	0.7	0.1	2.6
Sludge Disposal				151.8		151.8
Hazardous Waste Disposal						
Oil Disposal						
Energy and Power	3.3	1.6	16.3	21.2		42.4
Steam						
Waste Acid						
Crystal Disposal						
Chemical		124.8	69.3			194.1
TOTAL	307.7	135.3	141.1	254.7	117.9	956.7
Credits						
Scale						
Sinter						
Oil						
Acid Recovery						
TOTAL CREDITS.						
NET TOTAL	307.7	135.3	141.1	254.7	117.9	956.7

KEY TO C&TT STEPS

A: Thickening
B: Flocculation With Polymer
C: Neutralization With Lime
D: Vacuum Filtration
E: Recycle

TABLE VIII-16

BPT/NSPS/PSES/PSNS TREATMENT MODEL COSTS: BASIS 7/1/78 DOLLARS

Subcategory :	Steelmaking	Model Size-TPD :	3,100
Subdivision :	Electric Arc Furnace	Oper. Days/Year:	365
:	Semi-Wet	Turns/Day :	3

C&TT Step	A	B	C	Total
Investment ($ x 10^{-3})	79.3	22.0	266.5	367.8
Annual Costs ($ x 10^{-3})				
Capital	7.1	2.0	24.0	33.1
Operation & Maintenance	2.8	0.8	9.3	12.9
Land	0.1	0.1	0.1	0.3
Sludge Disposal				
Hazardous Waste Disposal	26.9			26.9
Oil Disposal				
Energy and Power		0.7		0.7
Steam				
Waste Acid				
Crystal Disposal				
Chemical		5.3		5.3
TOTAL	36.9	8.9	33.4	79.2
Credits				
Scale				
Sinter				
Oil				
Acid Recovery				
TOTAL CREDITS				
NET TOTAL	36.9	8.9	33.4	79.2

KEY TO C&TT STEPS

A: Drag Tank
B: Flocculation With Polymer
C: Recycle

TABLE VIII-17

BPT TREATMENT MODEL COSTS: BASIS 7/1/78 DOLLARS

Subcategory: Steelmaking
Subdivision: Electric Arc Furnace
: Wet

Model Size-TPD : 1,800
Oper. Days/Year: 365
Turns/Day : 3

C&TT Step	A	B	C	D	Total
Investment ($ x 10^{-3})	1,117.2	33.0	601.0	516.4	2,267.6
Annual Costs ($ x 10^{-3})					
Capital	100.4	3.0	54.0	46.4	203.8
Operation & Maintenance	39.1	1.2	21.0	18.1	79.4
Land	0.6		0.4	0.1	1.1
Sludge Disposal					
Hazardous Waste Disposal			250.5		250.5
Oil Disposal					
Energy & Power	1.6	1.5	16.3		19.4
Steam					
Waste Acid					
Crystal Disposal					
Chemical		41.4			41.4
TOTAL	141.7	47.1	342.2	64.6	595.6
Credits					
Scale					
Sinter					
Oil					
Acid Recovery					
TOTAL CREDITS					
NET TOTAL	141.7	47.1	342.2	64.6	595.6

KEY TO C&TT STEPS

A: Thickening
B: Flocculation with Polymer
C: Vacuum Filtration
D: Recycle

TABLE VIII-18

BAT/PSES/PSNS TREATMENT MODEL COSTS: BASIS 7/1/78 DOLLARS

Subcategory: Steelmaking
Subdivision: Basic Oxygen Furnace
: Wet-Suppressed Combustion

Model Size - TPD: 7,400
Oper. Days/Year : 365
Turns/Day : 3

C&TT Step	Total BPT	Alternative 1			Alternative 2				Alternative 3		
		F	G*	Total	H	I	G*	Total	J	K	Total
Investment ($ x 10^{-3})	3,170.0	246.7	0.0	246.7	88.3	220.0	0.0	308.3	3,985.9	96.5	4,082.4
Annual Costs ($ x 10^{-3})											
Capital	285.0	22.2		22.2	7.9	19.8		27.7	358.3	8.7	367.0
Operation & Maintenance	111.0	8.6		8.6	3.1	7.7		10.8	139.5	3.4	142.9
Land	1.6	0.1		0.1	0.1	0.1		0.2	0.1	0.1	0.2
Sludge Disposal	337.6										
Hazardous Waste Disposal											
Oil Disposal											
Energy & Power	26.2	2.1		2.1	1.1	0.8		1.9	307.0		307.0
Steam											
Waste Acid											
Crystal Disposal											
Chemical	84.5				2.3			2.3			
TOTAL	845.9	33.0	0.0	33.0	14.5	28.4	0.0	42.9	804.9	12.2	817.1
Credits											
Scale											
Sinter											
Oil											
Acid Recovery											
TOTAL CREDITS											
NET TOTAL	845.9	33.0	0.0	33.0	14.5	28.4	0.0	42.9	804.9	12.2	817.1

KEY TO TREATMENT ALTERNATIVES

PSES-1, PSNS-1 = BPT*
PSES-2, PSNS-2 = BPT* + BAT-1
PSES-3, PSNS-3 = BPT* + BAT-2
PSES-4, PSNS-4 = BPT* + BAT-3

KEY TO C&TT STEPS

F: Pressure Filtration
G: Neutralization with Acid
H: Neutralization with Lime
I: Inclined Plate Separation
J: Vapor Compression Distillation
K: Recycle

* pH control with acid is transferred from BPT for incorporation with BAT.
This treatment component was not included in the Model Costs for POTW dischargers.

TABLE VIII-19

BAT/PSES/PSNS TREATMENT MODEL COSTS: BASIS 7/1/78 DOLLARS

Subcategory: Steelmaking
Subdivision: Basic Oxygen Furnace
: Wet-Open Combustion

Model Size - TPD: 9,100
Oper. Days/Year : 365
Turns/Day : 3

C&TT Step	Total BPT	Alternative 1			Alternative 2				Alternative 3		
		F	G*	Total	H	I	G*	Total	J	K	Total
Investment ($ x 10^{-3})	4,737.7	539.3	0.0	539.3	150.8	323.4	0.0	474.2	7,240.3	308.5	7,548.8
Annual Costs ($ x 10^{-3})											
Capital	425.9	48.5		48.5	13.6	29.1		42.7	650.9	27.7	678.6
Operation & Maintenance	165.8	18.9		18.9	5.3	11.3		16.6	253.4	10.8	264.2
Land	3.1	0.1		0.1	0.1	0.1		0.2	0.1	0.1	0.2
Sludge Disposal	316.3										
Hazardous Waste Disposal											
Oil Disposal											
Energy & Power	72.6	7.3		7.3	2.4	1.6		4.0	831.2		831.2
Steam											
Waste Acid											
Crystal Disposal											
Chemical	118.8				6.1			6.1			
TOTAL	1,102.5	74.8	0.0	74.8	27.5	42.1	0.0	69.6	1,735.6	38.6	1,774.2
Credits											
Scale											
Sinter											
Oil											
Acid Recovery											
TOTAL CREDITS											
NET TOTAL	1,102.5	74.8	0.0	74.8	27.5	42.1	0.0	69.6	1,735.6	38.6	1,774.2

KEY TO TREATMENT ALTERNATIVES

PSES-1, PSNS-1 = BPT*
PSES-2, PSNS-2 = BPT* + BAT-1
PSES-3, PSNS-3 = BPT* + BAT-2
PSES-4, PSNS-4 = BPT* + BAT-3

KEY TO C&TT STEPS

F: Pressure Filtration
G: Neutralization with Acid
H: Neutralization with Lime
I: Inclined Plate Separation
J: Vapor Compression Distillation
K: Recycle

* pH control with acid is a BPT which is transferred for incorporation with BAT. This treatment component was not included in the Model Costs for POTW dischargers.

TABLE VIII-20

BAT/PSES TREATMENT MODEL COSTS: BASIS 7/1/78 DOLLARS

Subcategory: Steelmaking
Subdivision: Open Hearth Furnace
: Wet

Model Size - TPD: 6,700
Oper. Days/Year : 365
Turns/Day : 3

C&TT Step	Total BPT	Alternative 1 F	Alternative 1 Total	Alternative 2 G	Alternative 2 H	Alternative 2 I*	Alternative 2 Total	Alternative 3 J	Alternative 3 K	Alternative 3 Total
Investment ($ x 10^{-3})	4,531.2	520.7	520.7	107.3	269.3	75.2	451.8	6,027.4	308.5	6,335.9
Annual Costs ($ x 10^{-3})										
Capital	407.3	46.8	46.8	9.6	24.2	6.8	40.6	541.9	27.7	569.6
Operation & Maintenance	158.5	18.2	18.2	3.8	9.4	2.6	15.8	211.0	10.8	221.8
Land	2.6	0.1	0.1	0.1	0.1	0.1	0.3	0.1	0.1	0.2
Sludge Disposal	151.8									
Hazardous Waste Disposal										
Oil Disposal										
Energy & Power	42.4	5.7	5.7	1.1	1.6	1.5	4.2	612.4		612.4
Steam										
Waste Acid										
Crystal Disposal										
Chemical	194.1			4.5		6.7	11.2			
TOTAL	956.7	70.8	70.8	19.1	35.3	17.7	72.1	1,365.4	38.6	1,404.0
Credits										
Scale										
Sinter										
Oil										
Acid Recovery										
TOTAL CREDITS										
NET TOTAL	956.7	70.8	70.8	19.1	35.3	17.7	72.1	1,365.4	38.6	1,404.0

KEY TO TREATMENT ALTERNATIVES

PSES-1 = BPT
PSES-2 = BPT + BAT-1
PSES-3 = BPT + BAT-2
PSES-4 = BPT + BAT-3

KEY TO C&TT STEPS

F: Pressure Filtration
G: Neutralization with Lime
H: Inclined Plate Separation
I: Neutralization with Acid
J: Vapor Compression Distillation
K: Recycle

* The pH control with acid treatment component was not included in the Model Costs for POTW dischargers.

TABLE VIII-21

BAT/PSES/PSNS/NSPS TREATMENT MODEL COSTS: BASIS 7/1/78 DOLLARS

Subcategory: Steelmaking
Subdivision: Electric Arc Furnace
: Wet

Model Size - TPD: 1,800
Oper. Days/Year : 365
Turns/Day : 3

C&TT Step	Total BPT	BAT Alternative 1		BAT Alternative 2				BAT Alternative 3		
		E	Total	F	G	H*	Total	I	J	Total
Investment ($ x 10^{-3})	2,267.6	161.9	161.9	66.1	146.6	29.7	242.4	2,732.7	48.8	2,781.5
Annual Costs ($ x 10^{-3})										
Capital	203.8	14.6	14.6	5.9	13.2	2.7	21.8	245.7	4.4	250.1
Operation & Maintenance	79.4	5.7	5.7	2.3	5.1	1.0	8.4	95.6	1.7	97.3
Land	1.1	0.1	0.1	0.1	0.1	0.1	0.3	0.1	0.1	0.2
Sludge Disposal										
Hazardous Waste Disposal	250.5									
Oil Disposal										
Energy & Power	19.4	1.1	1.1	0.8	0.7	0.5	2.0	164.1		164.1
Steam										
Waste Acid										
Crystal Disposal										
Chemical	41.4			1.2		1.8	3.0			
TOTAL	595.6	21.5	21.5	10.3	19.1	6.1	35.5	505.5	6.2	511.7
Credits										
Scale										
Sinter										
Oil										
Acid Recovery										
TOTAL CREDITS										
NET TOTAL	595.6	21.5	21.5	10.3	19.1	6.1	35.5	505.5	6.2	511.7

KEY TO TREATMENT ALTERNATIVES

PSES-1, PSNS-1 = BPT
PSES-2, PSNS-2, NSPS-1 = BPT + BAT-1
PSES-3, PSNS-3, NSPS-2 = BPT + BAT-2
PSES-4, PSNS-4, NSPS-3 = BPT + BAT-3

KEY TO C&TT STEPS

E: Pressure Filtration
F: Neutralization with Lime
G: Inclined Plate Separation
H: Neutralization with Acid
I: Vapor Compression Distillation
J: Recycle

* The pH control with acid treatment component was not included in the Model Costs for POTW dischargers.

TABLE VIII-22

NSPS TREATMENT MODEL COSTS : BASIS 7/1/78 DOLLARS

Subcategory: Steelmaking
Subdivision: Basic Oxygen Furnace
: Wet-Suppressed Combustion

Model Size - TPD: 7,400
Oper. Days/Year : 365
Turns/Day : 3

C&TT Step	NSPS Alternative 1							NSPS Alternative 2 Components A, B, C, D Plus:				NSPS Alternative 3 Components A, B, C, D Plus:		
	A	B	C	D	E	F	Total	G	H	F	Total	I	J	Total
Investment ($ x 10^{-3})	1,772.0	35.0	559.0	756.0	246.7	48.0	3,416.7	88.3	220.0	48.0	3,478.3	3,985.9	96.5	7,204.4
Annual Cost ($ x 10^{-3})														
Capital	159.3	3.1	50.3	68.0	22.2	4.3	307.2	7.9	19.8	4.3	312.7	358.3	8.7	647.7
Operation & Maintenance	62.0	1.2	19.6	26.5	8.6	1.7	119.6	3.1	7.7	1.7	121.8	139.5	3.4	252.2
Land	1.1	0.1	0.3		0.1	0.1	1.7	0.1	0.1	0.1	1.8	0.1	0.1	1.7
Sludge Disposal			337.6				337.6				337.6			337.6
Hazardous Waste Disposal														
Oil Disposal														
Energy & Power	5.7	0.7	19.1		2.1	0.7	28.3	1.1	0.8	0.7	28.1	307.0		332.5
Steam														
Waste Acid														
Crystal Disposal														
Chemical		81.5				3.0	84.5	2.3		3.0	86.8			81.5
TOTAL	228.1	86.6	426.9	94.5	33.0	9.8	878.9	14.5	28.4	9.8	888.8	804.9	12.2	1,653.2
Credits														
Scale														
Sinter														
Oil														
Acid Recovery														
TOTAL CREDITS														
NET TOTAL	228.1	86.6	426.9	94.5	33.0	9.8	878.9	14.5	28.4	9.8	888.8	804.9	12.2	1,653.2

KEY TO C&TT STEPS

A: Thickening
B: Flocculation with Polymer
C: Vacuum Filtration
D: Recycle
E: Pressure Filtration
F: Neutralization with Acid
G: Neutralization with Lime
H: Inclined Plate Separation
I: Vapor Compression Distillation
J: Recycle

TABLE VIII-23

NSPS TREATMENT MODEL COSTS : BASIS 7/1/78 DOLLARS

Subcategory: Steelmaking
Subdivision: Basic Oxygen Furnace
: Wet-Open Combustion

Model Size - TPD: 9,100
Oper. Days/Year : 365
Turns/Day : 3

C&TT Step	NSPS Alternative 1							NSPS Alternative 2 Components A, B, C, D Plus:				NSPS Alternative 3 Components A, B, C, D Plus:		
	A	B	C	D	E	F	Total	G	H	F	Total	I	J	Total
Investment ($ x 10^{-3})	2,243.0	66.0	1,414.7	893.0	539.3	121.0	5,277.0	150.8	323.4	121.0	5,211.9	7,240.3	308.5	12,165.5
Annual Cost ($ x 10^{-3})														
Capital	201.6	5.9	127.2	80.3	48.5	10.9	474.4	13.6	29.1	10.9	468.6	650.9	27.7	1,093.6
Operation & Maintenance	78.5	2.3	49.5	31.3	18.9	4.2	184.7	5.3	11.3	4.2	182.4	253.4	10.8	425.8
Land	1.5		1.4	0.1	0.1	0.1	3.2	0.1	0.1	0.1	3.3	0.1	0.1	3.2
Sludge Disposal			316.3				316.3				316.3			316.3
Hazardous Waste Disposal														
Oil Disposal														
Energy & Power	3.3	1.6	65.3		7.3	2.4	79.9	2.4	1.6	2.4	76.6	831.2		831.2
Steam														
Waste Acid														
Crystal Disposal														
Chemical		109.7				9.1	118.8	6.1		9.1	124.9			109.7
TOTAL	284.9	119.5	559.7	111.7	74.8	26.7	1,177.3	27.5	42.1	26.7	1,172.1	1,735.6	38.6	2,850.0
Credits														
Scale														
Sinter														
Oil														
Acid Recovery														
TOTAL CREDITS														
NET TOTAL	284.9	119.5	559.7	111.7	74.8	26.7	1,177.3	27.5	42.1	26.7	1,172.1	1,735.6	38.6	2,850.0

KEY TO C&TT STEPS

A: Thickening
B: Flocculation with Polymer
C: Vacuum Filtration
D: Recycle
E: Pressure Filtration
F: Neutralization with Acid
G: Neutralization with Lime
H: Inclined Plate Separation
I: Vapor Compression Distillation
J: Recycle

TABLE VIII-24

BAT COST SUMMARY (MILLIONS OF 7/1/78 DOLLARS)
STEELMAKING SUBCATEGORY

Subdivision	BAT Alternative No. 1				BAT Alternative No. 2				BAT Alternative No. 3			
	Investment		Annual		Investment		Annual		Investment		Annual	
	In-Place	Required	In-Place	Required	In-Place	Required	In-Place	Required	In-Place	Required	In-Place	Required
Basic Oxygen Furnace												
Wet-Suppressed Combustion	0	$ 1.23	0	$0.16	$1.20	$0.34	$0.16	$0.06	0	$ 20.36	0	$ 4.08
Wet-Open Combustion	0	6.69	0	0.93	0.56	5.32	0.08	0.78	0	93.59	0	22.00
Open Hearth Furnace												
Wet	0	2.04	0	0.28	0.33	1.44	0.05	0.23	0	24.86	0	5.51
Electric Arc Furnace												
Wet	0	1.03	0	0.14	0.46	1.09	0.06	0.17	0	17.76	0	3.27
TOTAL	0	10.99	0	1.51	2.55	8.19	0.35	1.24	0	156.57	0	34.86

TABLE VIII-25

PSES COST SUMMARY (MILLIONS OF 7/1/78 DOLLARS)
STEELMAKING SUBCATEGORY

	PSES Alternative No. 1				PSES Alternative No. 2				PSES Alternative No. 3.				PSES Alternative No. 4			
	Investment		Annual		Investment		Annual		Investment		Annual		Investment		Annual	
Subdivision	In-Place	Required	In-Place	Required	In-Place	Required	In-Place	Required	In-Place	Required	In-Place	Required	In-Place	Required	In-Place	Required
Basic Oxygen Furnace																
Wet-Suppressed Combustion	$ 3.06	0	$ 0.82	0	0	0	0	0	0	0	0	0	0	0	0	0
Wet-Open Combustion	5.37	0	1.25	0	0	0	0	0	0.37	0	0.05	0	0	0	0	0
Electric Arc Furnace																
Wet	2.73	0	0.72	0	0	0	0	0	0.18	0	0.02	0	0	0	0	0
TOTAL	11.16	0	2.79	0	0	0	0	0	0.55	0	0.07	0	0	0	0	0

TABLE VIII-26

SOLID WASTE GENERATION SUMMARY
STEELMAKING SUBCATEGORY

Subdivision	Segment	BPT (tons/year) No. of Plants	BPT Model Plant	BPT Segment	BAT No. 1 (tons/year) No. of Plants	BAT No. 1 Model Plant	BAT No. 1 Segment
Basic Oxygen Furnace	Semi-Wet	8	800	6,400	NA	-	-
	Wet-Suppressed Combustion	5	7,550	37,750	5	20	100
	Wet-Open Combustion	13	63,260	822,380	13	53	689
Open Hearth Furnace	Wet	4	30,360	121,440	4	39	156
Electric Arc Furnace	Semi-Wet	3	1,500	4,500	NA	-	-
	Wet	6	19,270	115,620	6	11	66

Subdivision	Segment	BAT No. 2 (tons/year) No. of Plants	BAT No. 2 Model Plant	BAT No. 2 Segment	BAT No. 3 (tons/year) No. of Plants	BAT No. 3 Model Plant	BAT No. 3 Segment
Basic Oxygen Furnace	Semi-Wet	NA	-	-	NA	-	-
	Wet-Suppressed Combustion	5	70	350	5	-	-
	Wet-Open Combustion	13	20	2,600	13	-	-
Open Hearth Furnace	Wet	4	265	1,060	4	-	-
Electric Arc Furnace	Semi-Wet	NA	-	-	NA	-	-
	Wet	6	42	252	6	-	-

TABLE VIII-26
SOLID WASTE GENERATION SUMMARY
STEELMAKING SUBCATEGORY
PAGE 2

		PSES-1 (tons/year)			PSES-2 (tons/year)		
Subdivision	Segment	No. of Plants	Model Plant	Segment	No. of Plants	Model Plant	Segment
Basic Oxygen Furnace	Semi-Wet	0	800	-	-	-	-
	Wet-Suppressed Combustion	1	7,550	7,550	1	7,570	7,570
	Wet-Open Combustion	1	63,260	63,260	1	63,310	63,310
Open Hearth Furnace	Wet	-	30,360	-	0	30,400	-
Electric Arc Furnace	Semi-Wet	0	1,500	-	-	-	-
	Wet	1	19,270	19,270	1	19,280	19,280

		PSES-3 (tons/year)			PSES-4 (tons/year)		
Subdivision	Segment	No. of Plants	Model Plant	Segment	No. of Plants	Model Plant	Segment
Basic Oxygen Furnace	Semi-Wet	-	-	-	-	-	-
	Wet-Suppressed Combustion	1	7,620	7,620	1	7,550	7,550
	Wet-Open Combustion	1	63,460	63,460	1	63,260	63,260
Open Hearth Furnace	Wet	0	30,625	-	-	30,360	-
Electric Arc Furnace	Semi-Wet	-	-	-	-	-	-
	Wet	1	19,310	19,310	1	19,270	19,270

TABLE VIII-26
SOLID WASTE GENERATION SUMMARY
STEELMAKING SUBCATEGORY
PAGE 3

Subdivision	Segment	PSNS-1 (tons/year) No. of Plants	PSNS-1 (tons/year) Model Plant	PSNS-1 (tons/year) Segment	NSPS-1/PSNS-2 (tons/year) No. of Plants	NSPS-1/PSNS-2 (tons/year) Model Plant	NSPS-1/PSNS-2 (tons/year) Segment
Basic Oxygen Furnace	Semi-Wet	NA	800	-	NA	-	-
	Wet-Suppressed Combustion	NA	7,550	-	NA	7,570	-
	Wet-Open Combustion	NA	63,260	-	NA	63,310	-
Open Hearth Furance	Wet	NA	NA	NA	NA	NA	NA
Electric Arc Furnace	Semi-Wet	NA	1,500	-	NA	-	-
	Wet	NA	19,270	-	NA	19,280	-

Subdivision	Segment	NSPS-2/PSNS-3 (tons/year) No. of Plants	NSPS-2/PSNS-3 (tons/year) Model Plant	NSPS-2/PSNS-3 (tons/year) Segment	NSPS-3/PSNS-4 (tons/year) No. of Plants	NSPS-3/PSNS-4 (tons/year) Model Plant	NSPS-3/PSNS-4 (tons/year) Segment
Basic Oxygen Furnace	Semi-Wet	NA	-	-	NA	-	-
	Wet-Suppressed Combustion	NA	7,620	-	NA	-	-
	Wet-Open Combustion	NA	63,460	-	NA	-	-
Open Hearth Furance	Wet	NA	NA	NA	NA	NA	NA
Electric Arc Furnace	Semi-Wet	NA	-	-	NA	-	-
	Wet	NA	19,310	-	NA	-	-

NA: Not Applicable

TABLE VIII-27

ENERGY REQUIREMENTS DUE TO WATER POLLUTION CONTROL
STEELMAKING SUBCATEGORY

Subdivision	Segment	BPT (kwh/year)			BAT No. 1 (kwh/year)		
		No. of Plants	Model	Segment	No. of Plants	Model	Segment
Basic Oxygen Furnace	Semi-Wet	8	44,000	352,000	NA	-	-
	Wet-Suppressed Combustion	5	1,048,000	5,240,000	5	84,000	420,00
	Wet-Open Combustion	13	2,904,000	37,752,000	13	292,000	3,796,000
Open Hearth Furnace	Wet	4	1,696,000	6,784,000	4	228,000	912,000
Electric Arc Furnace	Semi-Wet	3	28,000	84,000	NA	-	-
	Wet	6	776,000	4,656,000	6	44,000	264,000

Subdivision	Segment	BAT No. 2 (kwh/year)			BAT No. 3 (kwh/year)		
		No. of Plants	Model	Segment	No. of Plants	Model	Segment
Basic Oxygen Furnace	Semi-Wet	NA	-	-	NA	-	-
	Wet-Suppressed Combustion	5	76,000	380,000	5	12,280,000	61,400,000
	Wet-Open Combustion	13	160,000	2,080,000	13	33,248,000	432,224,000
Open Hearth Furnace	Wet	4	168,000	672,000	4	24,496,000	97,984,000
Electric Arc Furnace	Semi-Wet	NA	-	-	NA	-	-
	Wet	6	80,000	480,000	6	6,564,000	39,384,000

TABLE VIII-27
ENERGY REQUIREMENTS DUE TO WATER POLLUTION CONTROL
STEELMAKING SUBCATEGORY
PAGE 2

Subdivision	Segment	PSES-1 (kwh/year) No. of Plants	PSES-1 (kwh/year) Model	PSES-1 (kwh/year) Segment	PSES-2 (kwh/year) No. of Plants	PSES-2 (kwh/year) Model	PSES-2 (kwh/year) Segment
Basic Oxygen Furnace	Semi-Wet	0	44,000	-	NA	-	-
	Wet-Suppressed Combustion	1	1,048,000	1,048,000	1	1,132,000	1,132,000
	Wet-Open Combustion	1	2,904,000	2,904,000	1	3,196,000	3,196,000
Open Hearth Furnace	Wet	0	1,696,000	-	0	1,924,000	-
Electric Arc Furnace	Semi-Wet	0	28,000	-	NA	-	-
	Wet	1	776,000	776,000	1	820,000	820,000

Subdivision	Segment	PSES-3 (kwh/year) No. of Plants	PSES-3 (kwh/year) Model	PSES-3 (kwh/year) Segment	PSES-4 (kwh/year) No. of Plants	PSES-4 (kwh/year) Model	PSES-4 (kwh/year) Segment
Basic Oxygen	Semi-Wet	NA	-	-	NA	-	-
	Suppressed Combustion	1	1,124,000	1,124,000	1	13,328,000	13,328,00
	Wet-Open Combustion	1	3,064,000	3,064,000	1	36,152,000	36,152,000
Open Hearth Furnace	Wet	0	1,864,000	-	0	26,192,000	-
Electric Arc Furnace	Semi-Wet	NA	-	-	NA	-	-
	Wet	1	856,000	856,000	1	7,340,000	7,340,000

TABLE VIII-27
ENERGY REQUIREMENTS DUE TO WATER POLLUTION CONTROL
STEELMAKING SUBCATEGORY
PAGE 3

		PSNS-1 (kwh/year)			NSPS-1/PSNS-2 (kwh/year)		
Subdivision	Segment	No. of Plants	Model	Segment	No. of Plants	Model	Segment
Basic Oxygen Furnace	Semi-Wet	NA	44,000	-	NA	-	-
	Wet-Suppressed Combustion	NA	1,048,000	-	NA	1,132,000	-
	Wet-Open Combustion	NA	2,904,000	-	NA	3,196,000	-
Open Hearth Furnace	Wet	NA	1,696,000	-	NA	1,924,000	-
Electric Arc Furnace	Semi-Wet	NA	28,000	-	NA	-	-
	Wet	NA	776,000	-	NA	820,000	-

		NSPS-2/PSNS-3 (kwh/year)			NSPS-3/PSNS-4 (kwh/year)		
Subdivision	Segment	No. of Plants	Model	Segment	No. of Plants	Model	Segment
Basic Oxygen Furnace	Semi-Wet	NA	-	-	NA	-	-
	Wet-Suppressed Combustion	NA	1,124,000	-	NA	13,328,000	-
	Wet-Open Combustion	NA	3,064,00	-	NA	36,152,000	-
Open Hearth Furnace	Wet	NA	1,864,000	-	NA	26,192,000	-
Electric Arc Furnace	Semi-Wet	NA	-	-	NA	-	-
	Wet	NA	856,000	-	NA	7,340,000	-

NA: Not Applicable

BPT/BAT/BCT/NSPS/PSES/PSNS

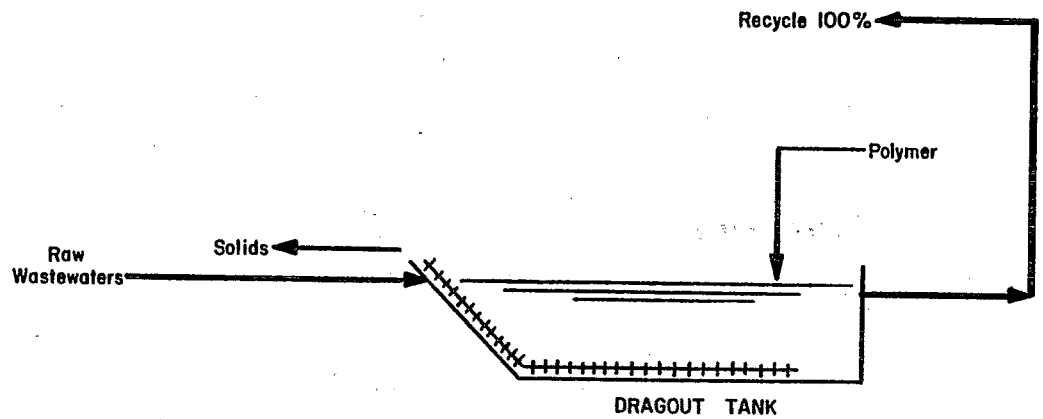

ENVIRONMENTAL PROTECTION AGENCY

STEEL INDUSTRY STUDY
STEELMAKING SUBCATEGORY
BASIC OXYGEN FURNACE (Semi-Wet)
TREATMENT MODEL

Dwn. 12/2/81

FIGURE VIII-1

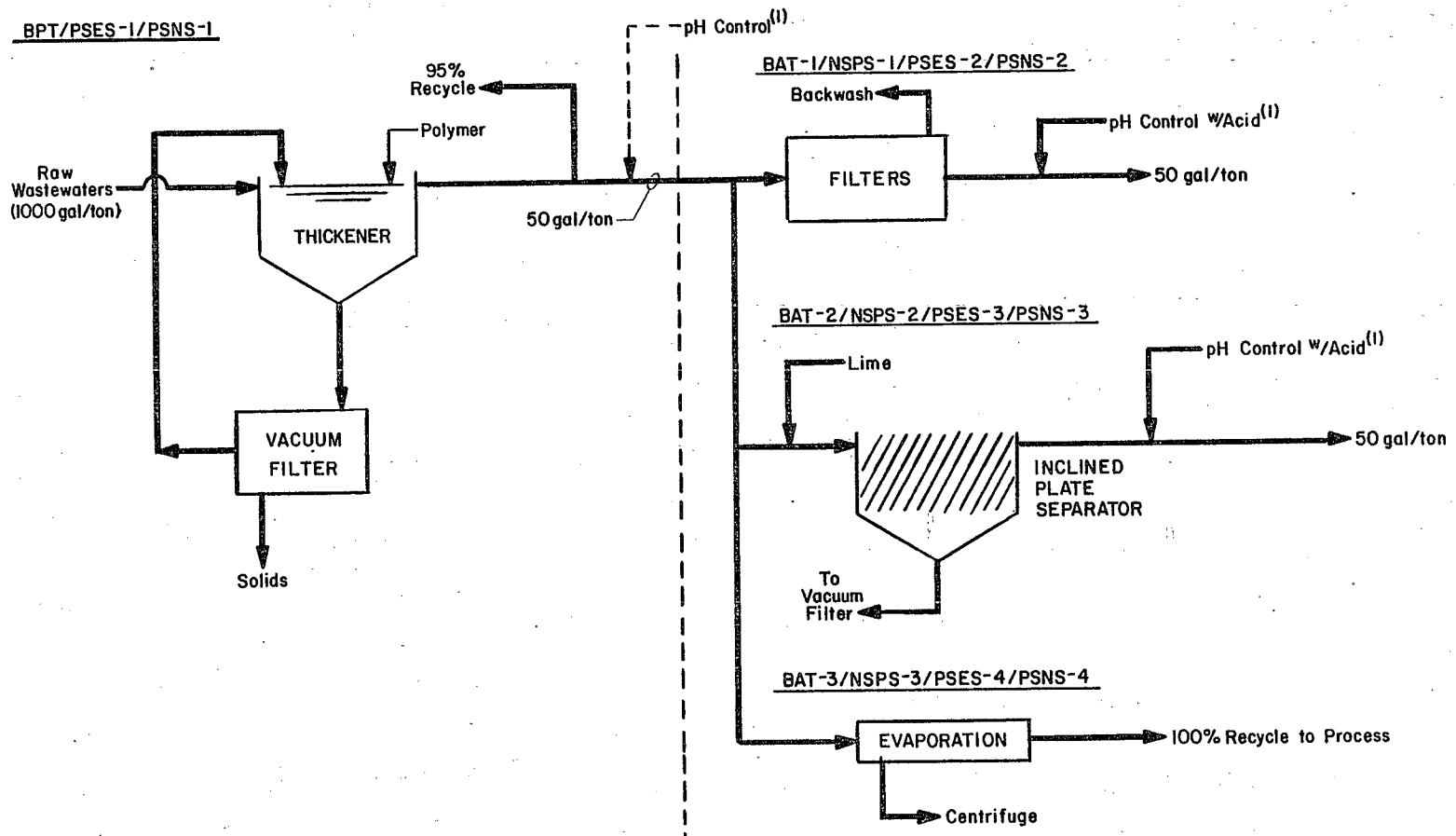

(1) pH Control with acid is a BPT step which is transferred for incorporation with BAT treatment. The cost of this step is not included with the BAT costs, nor is it included in the PSES/PSNS models.

ENVIRONMENTAL PROTECTION AGENCY

STEEL INDUSTRY STUDY
STEELMAKING SUBCATEGORY
BASIC OXYGEN FURNACE (Wet)
SUPPRESSED COMBUSTION
TREATMENT MODELS

Dwn. 12/2/81

FIGURE VIII-2

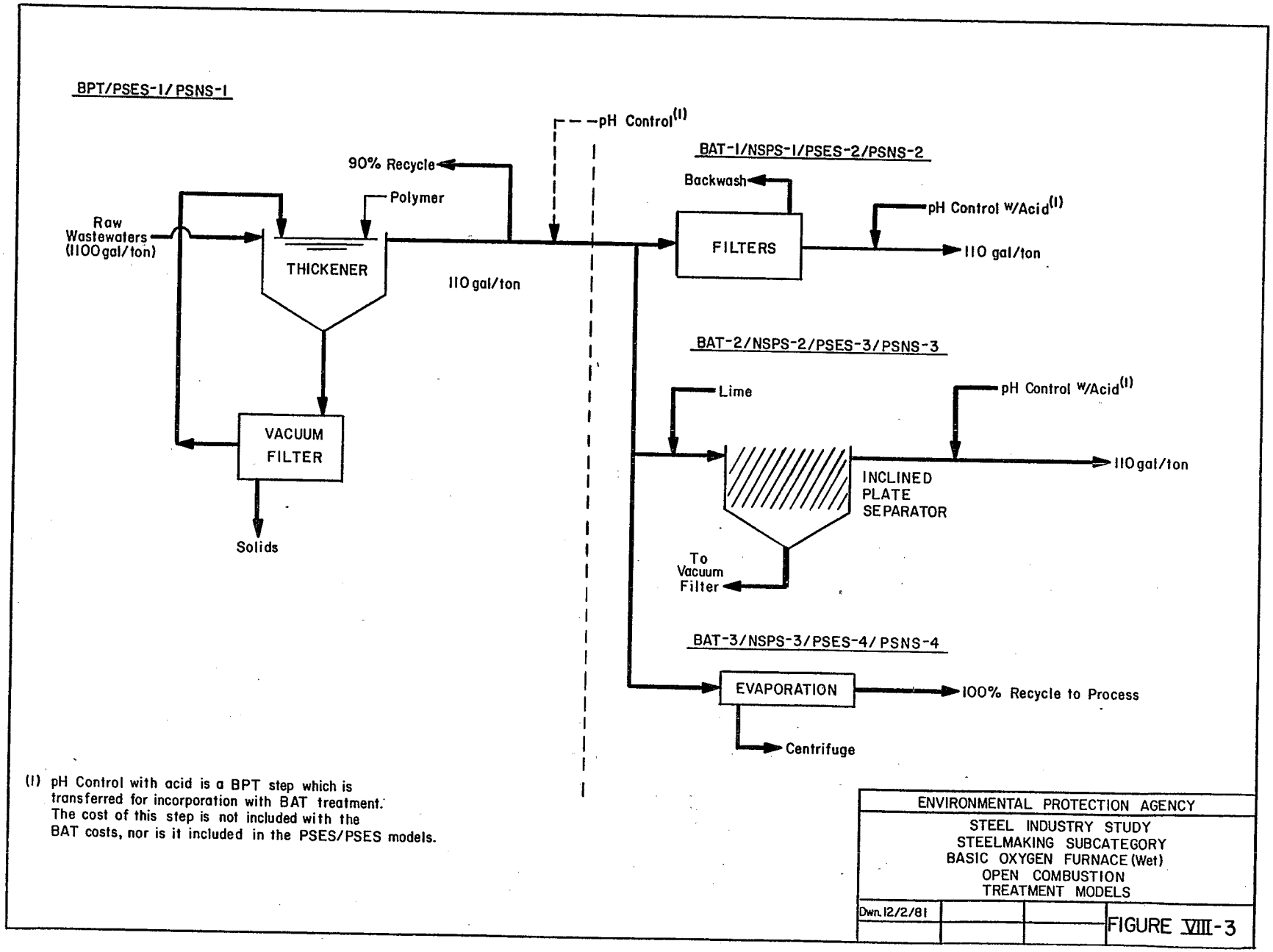

(1) pH Control with acid is a BPT step which is transferred for incorporation with BAT treatment. The cost of this step is not included with the BAT costs, nor is it included in the PSES/PSES models.

ENVIRONMENTAL PROTECTION AGENCY

STEEL INDUSTRY STUDY
STEELMAKING SUBCATEGORY
BASIC OXYGEN FURNACE (Wet)
OPEN COMBUSTION
TREATMENT MODELS

Dwn. 12/2/81

FIGURE VIII-3

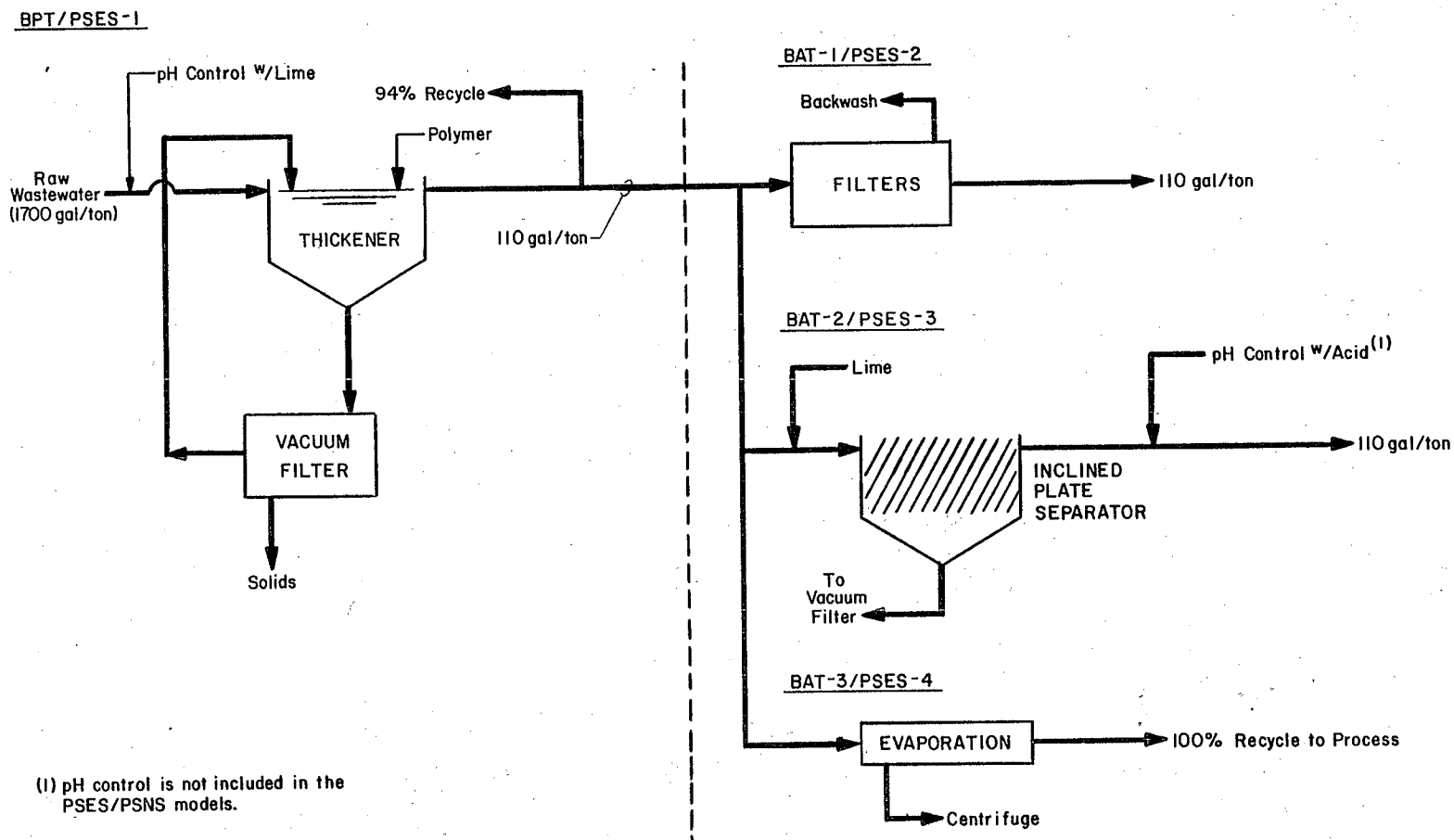

(1) pH control is not included in the PSES/PSNS models.

ENVIRONMENTAL PROTECTION AGENCY

STEEL INDUSTRY STUDY
STEELMAKING SUBCATEGORY
OPEN HEARTH FURNACE (Wet)
TREATMENT MODELS

Dwn. 12/3/81

FIGURE VIII-4

BPT/BAT/BCT/NSPS/PSES/PSNS

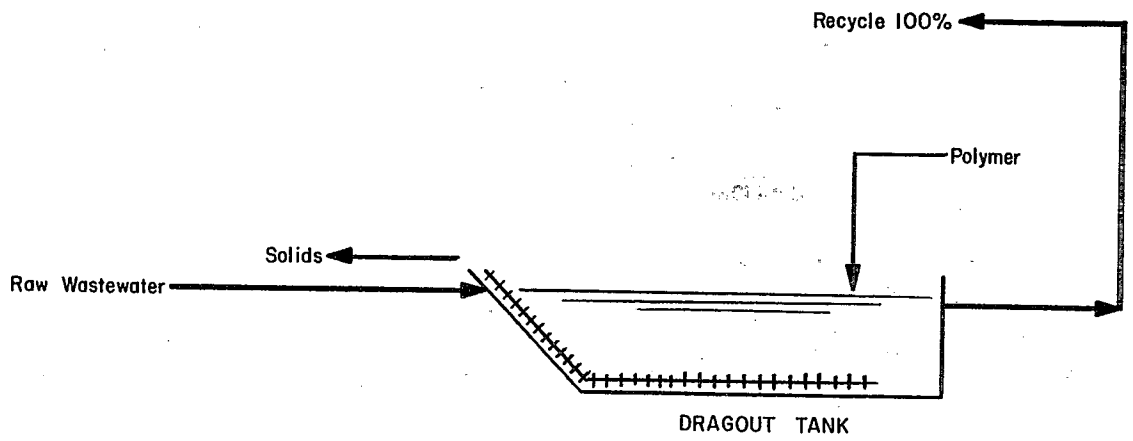

ENVIRONMENTAL PROTECTION AGENCY			
STEEL INDUSTRY STUDY STEELMAKING SUBCATEGORY ELECTRIC ARC FURNACE (Semi-Wet) TREATMENT MODEL			
Dwn. 12/3/81			FIGURE VIII-5

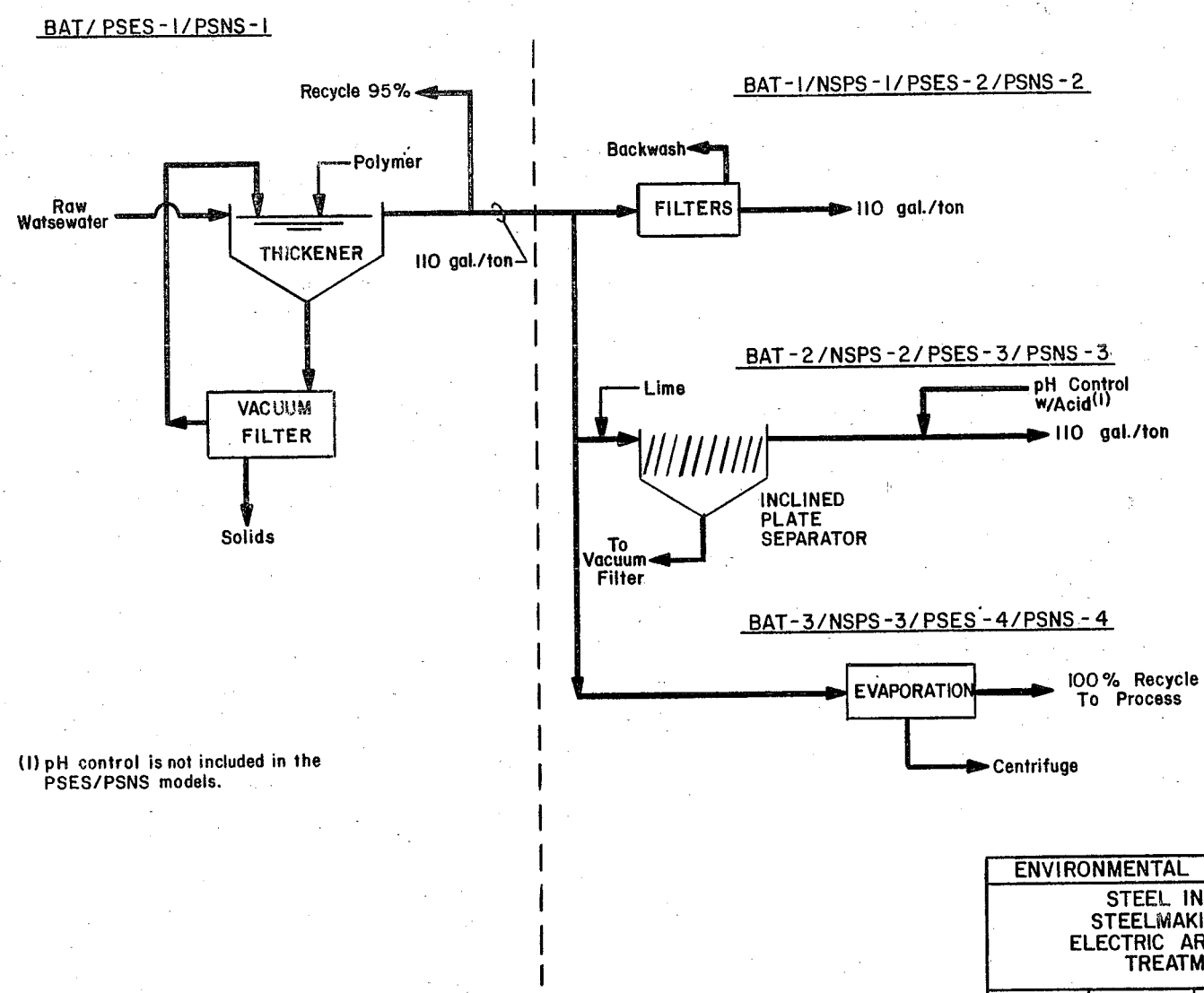

(1) pH control is not included in the PSES/PSNS models.

ENVIRONMENTAL PROTECTION AGENCY

STEEL INDUSTRY STUDY
STEELMAKING SUBCATEGORY
ELECTRIC ARC FURNACE (WET)
TREATMENT MODELS

Dwn. 12/4/81

FIGURE VIII-6

STEELMAKING SUBCATEGORY

SECTION IX

EFFLUENT QUALITY ATTAINABLE THROUGH THE APPLICATION OF THE BEST PRACTICABLE CONTROL TECHNOLOGY CURRENTLY AVAILABLE

The Agency has promulgated Best Practicable Control Technology Currently Available limitations (BPT) for the BOF semi-wet, BOF-wet-suppressed combustion, open hearth-wet and EAF semi-wet segments which are the same as those proposed in January 1981. The Agency has promulgated BPT limitations for the BOF-wet-open combustion and EAF wet segments which are less stringent than those proposed.[1] [2] The Agency concluded that division of the BOF wet air pollution control system segment to reflect flow and raw wastewater quality differences between suppressed combustion and open combustion operations is appropriate. Also the proposed regulation made a distinction between semi-wet and wet air pollution control systems for open hearth furnace operations. This was subsequently found to be the result of an error in the description of one facility. Hence, the open hearth furnace semi-wet air pollution control system segment has been deleted because there are no such plants. Also, the BPT effluent limitations for the BOF-wet-open combustion and the EAF wet air pollution control system segments have been modified to reflect the additional effluent flow data provided in comments on the proposed regulation and in responses to further agency inquiries.

The subdivisions and segments for the steelmaking subcategory are as follows:

Basic Oxygen Furnaces
- Semi-wet Air Pollution Control Systems
- Wet Air Pollution Control Systems - Suppressed Combustion
- Wet Air Pollution Control Systems - Open Combustion

Open Hearth Furnaces
- Wet Air Pollution Control Systems

---

[1]Federal Register; January 7, 1981, Environmental Protection Agency; Iron and Steel Manufacturing Point Source Category; Effluent Guidelines and Standards; Pages 1858.
[2]Development Document for Proposed Effluent Limitations Guidelines and New Source and Pretreatment Performance Standards for the Iron and Steel Manufacturing Point Source Category, EPA 440/1-80/024b, December 1980 (6 volumes).

Electric Arc Furnaces
Semi-wet Air Pollution Control Systems
Wet Air Pollution Control Systems

The December 1980 development document described the development of the proposed limitations. This section focuses on the basis for and the achievability of the promulgated limitations. A review of the treatment processes and effluent limitations for the steelmaking subdivisions follows.

Identification of BPT

The BPT model treatment systems for the BOF and EAF semi-wet segments include dragout tanks, coagulant aid addition, and complete recycle of the dragout tank overflow. Zero discharge is achieved by providing a balance between water consumed in conditioning the furnace gases, moisture leaving the process in wet dragout tank sludge, water applied to condition the gases, and make-up water. Figure IX-1 depicts the treatment systems described above.

The BPT model treatment systems for the BOF wet-suppressed combustion, BOF wet open-combustion, Open Hearth wet and EAF wet segments include the following components: thickeners, coagulant aid addition, vacuum filters, and high rate recycle of the thickener effluent. The BOF wet segment models also include effluent pH control with acid, while the controlled addition of lime is included in the open hearth furnace BPT model treatment system. The use of lime for pH adjustment is demonstrated within this steelmaking subdivision. Figure IX-2 depicts the treatment systems described above.

The BPT limitations do not require the installation of the model treatment system. Any treatment system which achieves the limitations is acceptable. Table IX-1 summarizes the characteristics (for the BPT limited pollutants) of the various steelmaking process wastewaters. The Agency's survey data were used to determine the raw wastewater characteristics noted on this table. The 30-day average and daily maximum BPT effluent limitations for steelmaking operations are presented in Table IX-2.

Rationale for BPT

Model Treatment Systems

As noted in Section VII, the treatment system components included in the BPT model treatment systems are in use at many plants in each steelmaking segment. Thus, the use of each component of the model treatment systems is substantiated.

Model Treatment System Flow Rates

Tables IX-3 through IX-5 present the data used by the Agency to develop the following BPT model effluent flow rates for each of the steelmaking segments:

Segment	Model Flow (gal/ton)
BOF	
Semi-wet	0
Wet-suppressed combustion	50
Wet-open combustion	110
Open Hearth Furnace	
Wet	110
Electric Arc Furnace	
Semi-wet	0
Wet	110

For the BOF and electric arc furnace semi-wet segments, the BPT model treatment system flow rates of zero discharge have been retained. These flow rates were previously selected as the average of the best flow rates of semi-wet steelmaking operations and the Agency believes zero discharge is still appropriate for semi-wet operations.

The model treatment system flow rate of 50 gal/ton used to develop the previous BPT limitations for BOF wet-suppressed combustion operations has also been retained. This flow was previously determined to be the average of the best flows (see Table IX-3). The Agency believes it is appropriate to retain 50 gal/ton as the basis for the BPT limitations.

For BOF-open combustion operations, the model flow rate used to develop the previously promulgated and proposed BPT limitations was increased from 65 gal/ton to 110 gal/ton. The Agency believes that a flow of 65 gal/ton may not be achievable at BOF wet-open combustion plants with applied flow rates close to that of the model treatment system (1100 gal/ton). Sixty five gal/ton is achieved at only one plant and the applied flow at this plant is 262 gal/ton. The average of the best recycle rates for plants with applied flows close to the model treatment system applied flow rate is about 90%. The Agency considers those plants with recycle rates of at least 88% to be the best plants in this segment. Thus, the Agency established the model plant recycle rate at 90% and the resulting model plant discharge flow at 110 gal/ton.

The previous BPT model effluent flow of 110 gal/ton for open hearth operations has been retained. The Agency considers those plants with recycle rates of at least 94% to be the best plants in this segment (see Table IX-4). The Agency believes it is appropriate to retain 110 gal/ton as the basis for the BPT limitations.

For electric arc furnace wet operations, the model BPT effluent flow was increased from 50 to 110 gal/ton in the same manner noted above for BOF wet-open combustion operations. The average of the best recycle rate for electric furnace operations exceeds 95% (refer to Table IX-5). The Agency considers those plant with recycle rates of at least 95% to be the best plants in this segment. The Agency used this recycle rate and the applied flow of 2100 gal/ton to develop the

BPT model treatment system effluent flow rate of 110 gal/ton. The BPT model treatment system flow rate for all electric arc furnace wet operations is 110 gal/ton.

As shown in Tables IX-3 through IX-5, each of these flow rates is demonstrated by plants in the respective segments. The Agency believes that these plants are representative of well designed and operated recycle systems in the industry.

BPT Effluent Quality

The proposed and prior BPT limitations for wet steelmaking operations were based upon a 30-day average suspended solids concentration of 50 mg/l and a daily maximum concentration of 150 mg/l. Table A-7 of Appendix A of Volume I present data for several steelmaking operations that achieve these concentrations. The Agency believes that these plants are representative of the best plants in the industry and that the model BPT concentration values are achievable at all steelmaking operations.

Justification of BPT Effluent Limitations

Tables IX-6 through IX-8 present sampled plant and D-DCP effluent data which support the BPT effluent limitations for the steelmaking segments. The effluent limitations are achieved by some plants that have treatment system components which differ from those included in the BPT model treatment systems (in particular, lower recycle rates and higher effluent flows).

Generally, the remaining sampled plants did not achieve the respective effluent limitations at the time of sampling due to the absence or to an insufficient degree of recycle. By reducing effluent flows (incorporating greater recycle rates) to a level approximating the respective model effluent flows rates, the appropriate BPT effluent limitations are achievable at these plants. The data presented in Tables IX-6 through IX-8 justify the BPT effluent limitations for the steelmaking subcategory.

TABLE IX-1
BPT MODEL TREATMENT SYSTEM RAW WASTEWATER CHARACTERISTICS
STEELMAKING SUBCATEGORY

OPERATIONS		SUSPENDED SOLIDS (mg/l)	pH (units)
BASIC OXYGEN FURNACE	Semi-Wet	360	10-12
	Wet: Suppressed Combustion	720	8-11
	Wet: Open Combustion	4200	8-11
OPEN HEARTH FURNACE	Wet	1700	3-7
ELECTRIC ARC FURNACE	Semi-Wet	2200	6-9
	Wet	3400	6-9

TABLE IX-2
BPT EFFLUENT LIMITATIONS GUIDELINES
STEELMAKING SUBCATEGORY

OPERATION		TOTAL SUSPENDED SOLIDS			pH (units)
			CONCENTRATION BASIS (mg/l)	BPT LIMITATION (kg/kkg)	
BASIC OXYGEN FURNACE	Semi-Wet	No discharge of process wastewater pollutants to navigable waters.			
	Wet: Suppressed Combustion	Ave.	50	0.0104	Within the range 6.0 to 9.0
		Max.	150	0.0312	
	Wet: Open Combustion	Ave.	50	0.0229	Within the range 6.0 to 9.0
		Max.	150	0.0687	
OPEN HEARTH FURNACE	Wet	Ave.	50	0.0229	Within the range 6.0 to 9.0
		Max.	150	0.0687	
ELECTRIC ARC FURNACE	Semi-Wet	No discharge of process wastewater pollutants to navigable waters.			
	Wet	Ave.	50	0.0229	Within the range 6.0 to 9.0
		Max.	150	0.0687	

TABLE IX-3

SUMMARY OF FLOWS
STEELMAKING SUBCATEGORY
BASIC OXYGEN FURNACES - WET

Plant Code	Applied Flow (gal/ton)	Effluent Flow (gal/ton)	Operating Mode	Basis
Suppressed Combustion				
0684F*	569	33	RTP - 94	VISIT
0856N*	1278	39	RTP - 97	D-DCP
0060*	1897	75	RTP - 96	DCP
0384A	1327	80	RTP - 94	D-DCP
0684H	1129	113	RTP - 90	D-DCP
0528A	1818	1818	OT	DCP
Open Combustion				
0584F	262	65	RTP - 75	D-DCP
0384A*	977	99	RTP - 90	DCP
0868A*	1046	113	RTP - 89	VISIT
0856R*	1296	118	RTP - 91	DCP
0860B*	1263	146	RTP - 88	D-DCP
0920N	227	149	RTP - 34	DCP
0860B	1285	201	RTP - 84	DCP
0112D	454	244	RTP - 46	VISIT
0724A	1558	312	RTP - 80	D-DCP
0112A	1315	437	RTP - 67	DCP
0020B	2264	637	RTP - 72	D-DCP
0860H	1946	1596	RTP - 18	DCP
0856B	241	241	OT	VISIT
0112B	1824	1801	OT	DCP
0248A	2072	1934	OT	DCP

* : Plants which are used to develop the model recycle rate and effluent flow.

TABLE IX-4

SUMMARY OF FLOWS
STEELMAKING SUBCATEGORY
OPEN HEARTH FURNACES - WET

Plant Code	Applied Flow (gal/ton)	Effluent Flow (gal/ton)	Operating Mode	Basis
0864A*	1117	69	RTP - 94	D-DCP
0948C*	2679	80	RTP - 97	DCP
0060*	4392	105	RTP - 98	D-DCP
0112A	914	114	RTP and RUP - 88	D-DCP
0492A	506	359	RTP - 29	VISIT

* : Plants which are used to develop the model recycle rate and effluent flow.

TABLE IX-5

SUMMARY OF FLOWS
STEELMAKING SUBCATEGORY
ELECTRIC ARC FURNACES - WET

Plant Code	Applied Flow (gal/ton)	Effluent Flow (gal/ton)	Operating Mode	Basis
0612*	2412	45(1)	RTP and RUP - 98	D-DCP
0856F*	2092	104	RTP - 95	DCP
0060D	829	232	RTP - 72	D-DCP
0868B	2625	234	RTP - 91	D-DCP
0060F	2300	238	RTP and RUP - 90	VISIT
0860H	2353	776	RUP - 67	DCP
0492A	1178	836	RTP - 29	VISIT
0860H	2330	1212	RUP - 48	DCP
0528A	3512	3512	OT	DCP

* : Plants which are used to develop the model recycle rate and effluent flow.
(1): Company reports that effluent flow has increased by about 150 GPM (or about 39 gal/ton at rated production capactiy, or about 70 gal/ton at 1976 average production rate).

TABLE IX-6

JUSTIFICATION OF BPT EFFLUENT LIMITATIONS
BASIC OXYGEN FURNACE SUBDIVISION

	Suspended Solids (lb/1000 lb)	pH (Units)	C&TT Components
Semi-Wet			
BPT Limitations	No discharge of process wastewater pollutants to navigable waters.		DR,FLP,RTP-100
Plants			
R(0432A)	No discharge	-	DR,FLP,RTP-100
0920B(1)	No discharge, applied waters are completely evaporated	-	Not Applicable
Wet - Suppressed Combustion			
BPT Limitations	0.0104	6-9	FLP,T,VF,RTP-95,NA
Plants			
S(0060)	0.00478	9.3	Classifier,FLP,T,VF, RTP-94.7
038(0684F)	0.00179	7.5	Desiltors,T,VF,TP, FLP,FLL,RTP-94.2
0384A(2)	0.00534	9.3	Classifier,T,CL, RTP-94.0
0856N(2)	0.00553	7.9	T,CL,FLP,RTP-96.9
Wet - Open Combustion			
BPT Limitations	0.0229	6-9	FLP,T,VF,RTP-90,NA
Plants			
V(0584F)	0.0055	6.4	Classifier, FLP,T,VF, RTP-87.3
035(0868A)	0.0221	8.6	Desiltor,CL,VF,RTP-90

(1) Based on the DCP response (refer to the General Summary Tables).
(2) Based on D-DCP analytical data.

TABLE IX-7

JUSTIFICATION OF BPT EFFLUENT LIMITATIONS
OPEN HEARTH FURNACE SUBDIVISION

	Suspended Solids (lb/1000 lb)	pH (Units)	C&TT Components
Wet			
BPT Limitations	0.0229	6-9	NL,FLP,T,VF,RTP-94
Plants			
W(0112A)	0.0171	2.6	T,RTP and RUP-91
043(0864A)	0.000463	10.8	CL,FLL,FLP,RTP-99.7

TABLE IX-8

JUSTIFICATION OF BPT EFFLUENT LIMITATIONS
ELECTRIC ARC FURNACE SUBDIVISION

	Suspended Solids (lb/1000 lb)	pH (Units)	C&TT Components
Semi-Wet			
BPT Limitations	No discharge of process wastewater pollutants to navigable waters		FLP,T,VF,RTP-100
Plants			
Z(0584A)	No discharge	-	DR,RTP-100
Wet			
BPT Limitations	0.0229	6-9	FLP,T,VF,RTP-95
Plants			
AB(0868B)	0.0155	8.4	T,VF,SL,RTP-95
051(0612)	0.00620	7.6	CL,VF,RTP-98.5
052(0492A)	0.0103	8.5-9.5	CL,FLP,NL,VF,RTP-29

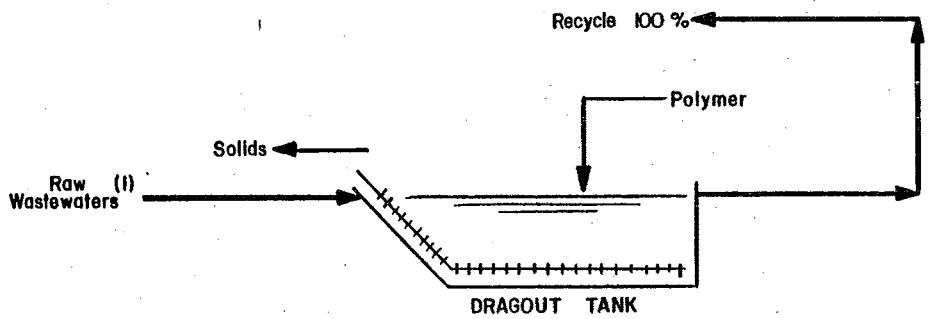

(1) Refer To Table IX-1 For Raw Wastewater Quality

ENVIRONMENTAL PROTECTION AGENCY			
STEEL INDUSTRY STUDY SEMI-WET AIR POLLUTION CONTROL SYSTEMS BPT TREATMENT MODELS			
Dwn. 12/4/81			FIGURE IX-1

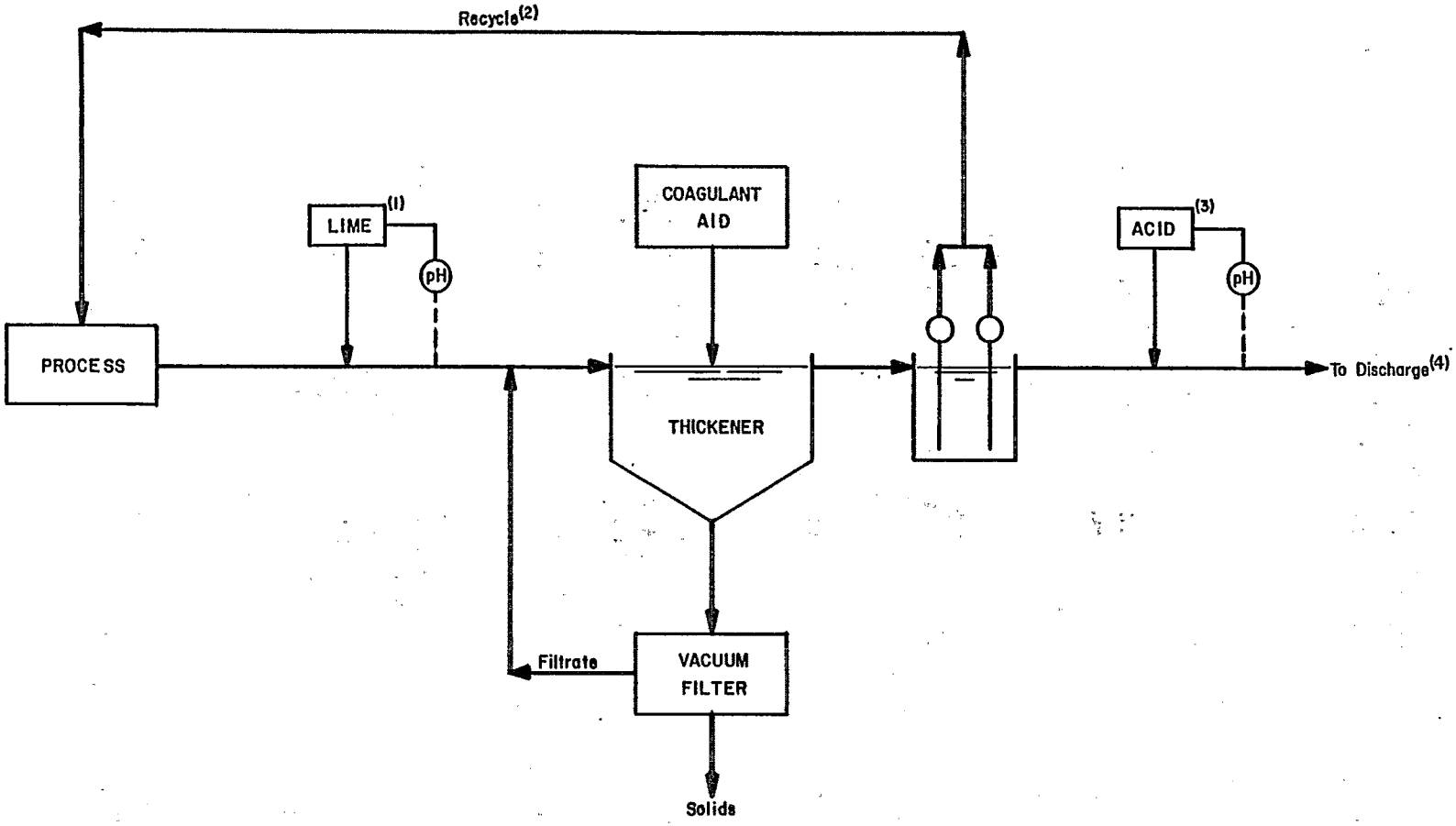

(1) pH controlled addition of lime is incorporated only in the open hearth model.

(2) Recycle percentages: 95% - Basic Oxygen Furnace - Suppressed Combustion.
90% - Basic Oxygen Furnace - Open Combustion
94% - Open Hearth Furnace
95% - Electric Arc Furnace

(3) pH controlled addition of acid is incorporated only in the basic oxygen furnace model.

(4) Refer to Table IX - 2 for effluent levels and loads.

ENVIRONMENTAL PROTECTION AGENCY

STEEL INDUSTRY STUDY
STEELMAKING SUBCATEGORY
WET AIR POLLUTION CONTROL SYSTEMS
BPT TREATMENT MODELS

Dwn. 6/4/80

FIGURE IX-2

STEELMAKING SUBCATEGORY

SECTION X

EFFLUENT QUALITY ATTAINABLE THROUGH THE APPLICATION OF THE BEST AVAILABLE TECHNOLOGY ECONOMICALLY ACHIEVABLE

Introduction

This section identifies three BAT alternative treatment systems considered by the Agency for steelmaking operations. In addition, the rationale for selecting treatment technologies, model plant flow rates, and effluent quality is presented.

Alternative Treatment Systems

Since the BPT effluent limitations for the semi-wet air pollution control system segments provide for zero discharge the BAT effluent limitations for these segments also provide for zero discharge and alternative treatment technologies were not developed for BAT.

Based upon the information presented in Sections III through VIII, the Agency developed the following BAT alternative treatment systems for wet steelmaking operations.

A. BAT Alternative 1

In the first alternative, filtration of the BPT treatment system blowdown is provided to reduce the effluent levels of those toxic metals entrained in the suspended solids. For basic oxygen furnace operations, the final treatment step is the addition of acid to control the treated effluent pH. This step is a relocated component of the BPT model treatment system.

B. BAT Alternative 2

Lime addition and gravity sedimentation of the BPT recycle system blowdown are provided in place of the filtration system noted above. Lime addition is included for the purpose of providing both dissolved and particulate toxic metals removal. Sedimentation of the suspended solids generated in this process occurs in inclined plate separators. A final pH adjustment of the treated effluent is also provided.

C. BAT Alternative 3

In this alternative, vapor compression distillation of the BPT recycle system blowdown is included to achieve zero discharge. The BPT system blowdown is evaporated, condensed, and returned to the process. The residue is dried and landfilled.

Figures VIII-2 through VIII-4, and VIII-6 illustrate the three BAT alternative treatment systems for the wet steelmaking segments. These treatment technologies are in use at one or more steelmaking operations; are demonstrated in other wastewater treatment applications; or, in the case of Alternative 3, are considered capable of attaining the respective BAT effluent levels. The applicability of each of these treatment alternatives is reviewed below.

The limitations considered for each BAT alternative are presented in Table X-1. Section VI presents the rationale for the selection of those toxic metal pollutants considered for limitation. As noted in Volume I, treatment of toxic pollutants found at high levels in the process wastewaters will result in a similar or greater degree of treatment for similar toxic pollutants found at lower levels. Although several toxic metal pollutants are found in steelmaking wastewaters, the Agency has promulgated BAT limitations for lead and zinc. The Agency's selection of those pollutants is based upon the following considerations: the relative levels, loads, and environmental impacts of each pollutant; the ability of the selected toxic metal pollutants to serve as indicators for other toxic pollutants; to facilitate co-treatment of compatible wastewaters; and, the need to develop practical monitoring requirements for the industry. Investment and annual costs for the various BAT treatment systems are presented in Tables VIII-18 to VIII-21.

Treatment Technologies

Filtration is included in BAT Alternative 1 to reduce effluent toxic metals loads. Filtration will remove only those toxic metals that are in particulate form. This technology is installed at Plant 0584C.

The lime precipitation and gravity sedimentation components of BAT Alternative 2 are provided to remove both dissolved and particulate toxic metals and fluoride. The removal of toxic metals results from the formation of hydroxide precipitates and from entrainment of particulate matter in the precipitates formed as a result of lime addition. As noted above, these solids and precipitates are removed by sedimentation. The capabilities of lime addition and precipitation with respect to toxic metals removal have been demonstrated in wastewater treatment applications in this subcategory, in this industry, and in other industries. Widely used in the steelmaking subcategories, lime addition also provides a convenient source of calcium for the formation of calcium fluoride precipitates. The use of lime in fluoride precipitation procedures has also been demonstrated in a variety of industrial wastewater treatment applications. This technology is installed on a full scale basis at Plants 0684F and 0864A for treating steelmaking wastewaters.

Zero discharge has not been reported as being achieved at any of the wet steelmaking operations. See Table V-1 through V-3. The wet gas cleaning systems accumulate dissolved solids and, unless some means is provided to remove or control the dissolved solids, they may cause fouling and scaling that will interfere with the operation of the

system. The most reliable method for removing these dissolved solids is through the use of the vapor compression distillation system included in BAT Alternative 3. This technology can be applied in each wet steelmaking segment and can achieve zero discharge (100% reduction of waste loads). However, the technology has both high investment costs and high energy consumption, and hence high annual costs.

Flows

Following are the model applied and effluent flows included in the BAT alternative treatment systems for each segment.

Operation	Applied Flow (gal/ton)	BAT Effluent Flow (gal/ton)
BOF Wet-Suppressed Combustion	1000	50
BOF Wet-Open Combustion	1100	110
Open Hearth - wet	1700	110
Electric Arc - wet	2100	110

Additional recycle beyond that included in the BPT model treatment systems is not included in any of the BAT alternative treatment systems. The Agency believes that the recycle rates and flow data at those plants used to develop the BPT model treatment system flow rates are representative of properly designed and well operated treatment systems in the industry. While additional recycle beyond those levels may be achievable in some cases, the Agency did not specify lower discharge flows at BAT because of potential fouling and scaling problems. Refer to Tables IX-3 through IX-5 for data which support the above model treatment system effluent flow rates.

A review of the data presented in Tables V-1 through V-3 and Tables IX-3 through IX-5 shows the various approaches used by plants to achieve the flow that is used as the basis for the limitations. Plant 0684F relies on a low applied flow rate and a good recycle system while plant 0856 relies on a very tight recycle system to off-set a high applied flow rate. A similar trade-off of flow versus concentration can be utilized to achieve the mass limitations.

Wastewater Quality

A. Nonconventional Pollutants

BAT limitations for fluoride were considered for the steelmaking subdivisions. However, the Agency has not promulgated BAT effluent limitations for fluoride on the basis that fluoride present in wastewaters from these operations will receive adequate treatment in the selected BAT alternative treatment system. Lime precipitation is a classic treatment technology for fluoride and the Agency expects fluoride concentrations of 20

mg/l will result from application of this technology to steelmaking wastewaters to control toxic metals.

B. Toxic Metal Pollutants

Refer to Table X-1 for a summary of the toxic metal effluent quality achievable with the BAT alternative treatment systems.

1. BAT Alternative 1

The Agency evaluated monitoring data from several sources to determine the effluent concentrations for the toxic metal pollutants in the first BAT alternative. Pilot plant studies conducted by the Agency for this subcategory were reviewed to determine the toxic metal pollutant removal capabilities of filters. Because a considerable portion of the toxic metals loadings in steelmaking BPT treatment system effluents are in the dissolved state (refer to the data presented in Section VII), notably from electric arc and open hearth furnaces, filtration systems are not particuarly effective in controlling toxic metals found in these wastewaters. Reference is made to Volume I, Appendix A, for the derivation of performance standards for the toxic metals.

2. BAT Alternative 2

The toxic metal removals provided by the second BAT alternative treatment system result from lime precipitation and subsequent suspended solids removal. The performance of this technology is based upon pilot studies conducted on electric arc furnace wastewaters, which have the highest toxic metals loadings of the steelmaking operations. The plant (Plant 0612) at which the pilot studies were conducted is a representative wet EAF operation. The blowdown rate of this plant is less than the BAT model flow rate. Refer to Table A-44 of Appendix A, Volume I for the pilot study data.

3. BAT Alternative 3

The third BAT alternative is based upon vapor compression distillation to achieve 100% reduction of pollutant discharges by virtue of achieving zero discharge. This technology, though used in other industry categories, is not demonstrated in steelmaking operations.

<u>Effluent Limitations for BAT Alternatives</u>

The Agency calculated effluent limitations for the BAT alternative treatment systems by multiplying the model treatment system effluent flows by the selected effluent concentration of each pollutant and by appropriate conversion factors. Since the bases for the effluent flows and concentrations have been substantiated, the Agency believes

that the resultant effluent limitations are justified. Table X-1 presents the effluent limitations associated with the alternative treatment systems.

Selection of a BAT Alternative

The Agency selected BAT Alternative 2 as the BAT model treatment system for the wet steelmaking operations. This control technology is depicted in Figure X-1. The selection process included a review of the toxicity levels of each pollutant considered for limitation at BAT, the effluent levels of these pollutants in each treatment alternative, and the costs of each alternative. On the basis of these considerations, the Agency determined that the selected BAT alternative provides the most significant benefits with regard to reductions in toxic pollutant effluent loads. Alternative 1 was not selected since it is not capable of removing dissolved toxic metal pollutants in steelmaking wastewaters. Alternative 3 was not selected because, in the Agency's judgment, the relatively small incremental toxic pollutant reduction from Alternative 2 to zero discharge does not justify the high costs.

The selected BAT effluent limitations are presented in Table X-1 in the column headed BAT Alternative No. 2.

Justification of BAT LImitations

The model treatment flow rates for each steelmaking operation are demonstrated at a number of steelmaking operations. The effluent quality is based upon pilot plant data obtained at electric arc furnace operations that have the highest BPT effluent toxic metals loadings and hence this effluent quality can be achieved by all steelmaking operations. Consequently, the Agency believes that the BAT limitations are justified for all steelmaking operations. As shown in Table X-3, the limitations are achieved on a full scale basis at Plant 0864A. Several of the plants listed in Tables X-2, 3, and 4 achieve the BAT limitations with having the complete BAT model treatment system installed. The limitations are also achieved at other plants (refer to Tables X-2 and X-4) where the toxic metals are removed in the BPT recycle systems.

TABLE X-1
ALTERNATIVE BAT EFFLUENT LIMITATIONS
STEELMAKING SUBCATEGORY

SUBDIVISION	SEGMENT			BAT ALTERNATIVE No. 1		BAT ALTERNATIVE No. 2		BAT ALTERNATIVE No. 3	
				CONCENTRATION BASIS (mg/l)	EFFLUENT LIMITATIONS (kg/kkg of Product)	CONCENTRATION BASIS (mg/l)	EFFLUENT LIMITATIONS (kg/kkg of Product)	CONCENTRATION BASIS (mg/l)	EFFLUENT LIMITATIONS (kg/kkg of Product)
BASIC OXYGEN FURNACE	WET: SUPPRESSED COMBUSTION	DISCHARGE FLOW (gal/ton)		50	—	50	—	0	—
		LEAD	Ave.	0.5	0.000104	0.3	0.0000626	—	—
			Max.	1.5	0.000313	0.9	0.000188	—	—
		ZINC	Max.	0.5	0.000104	0.45	0.0000939	—	—
			Ave.	1.5	0.000313	1.35	0.000282	—	—
	WET: OPEN COMBUSTION	DISCHARGE FLOW (gal/ton)		110	—	110	—	0	—
		LEAD	Ave.	0.5	0.000229	0.30	0.000138	—	—
			Max.	1.5	0.000688	0.9	0.000413	—	—
		ZINC	Ave.	0.5	0.000229	0.45	0.000207	—	—
			Max.	1.5	0.000688	1.35	0.000620	—	—
OPEN HEARTH FURNACE	WET AIR POLLUTION CONTROL SYSTEM	DISCHARGE FLOW (gal/ton)		110	—	110	—	0	—
		LEAD	Ave.	0.35	0.000161	0.30	0.000138	—	—
			Max.	1.05	0.000482	0.9	0.000413	—	—
		ZINC	Ave.	25	0.0115	0.45	0.000207	—	—
			Max.	75	0.0344	1.35	0.000620	—	—
ELECTRIC ARC FURNACE	WET AIR POLLUTION CONTROL SYSTEM	DISCHARGE FLOW (gal/ton)		110	—	110	—	0	—
		LEAD	Ave.	1	0.000459	0.3	0.000138	—	—
			Max.	3	0.00138	0.9	0.000413	—	—
		ZINC	Ave.	20	0.00918	0.45	0.000207	—	—
			Max.	60	0.0275	1.35	0.000620	—	—

The BAT Effluent Limitations are based upon BAT Alternative No. 2 (the selected alternative).

TABLE X-2

JUSTIFICATION OF BAT EFFLUENT LIMITATIONS (KG/KKG)
STEELMAKING SUBCATEGORY
BASIC OXYGEN FURNACE

	Lead	Zinc
Wet-Suppressed Combustion		
30-Day Average Limitations	0.0000626	0.0000939
Plants		
S (0060)	0.0000261	NJ
032 (0384A)	NJ	0.0000928
034 (0856N)	0.0000529	0.0000171
038 (0684F)	NA	0.0000037
0856N (1)	0.0000114	0.0000059
Wet-Open Combustion		
30-Day Average Limitations	0.000138	0.000207
Plants		
031 (0020B)	NJ	0.000051
036 (0112D)	0.000102	NJ

NJ: Not justified.
NA: No analysis performed.

(1) Based upon D-DCP analytical data.

TABLE X-3

JUSTIFICATION OF BAT EFFLUENT LIMITATIONS (KG/KKG)
STEELMAKING SUBCATEGORY
OPEN HEARTH FURNACE

	Lead	Zinc
30-Day Average Limitations	0.000138	0.000207
Plants		
043 (0864A)	0.0000002	0.0000005
0864A(1)	NA	0.0000144

NA: No analysis performed.

(1) Based upon D-DCP analytical data.

TABLE X-4

JUSTIFICATION OF BAT EFFLUENT LIMITATIONS (KG/KKG)
STEELMAKING SUBCATEGORY
ELECTRIC ARC FURNACE - WET

	Lead	Zinc
30-Day Average Limitations	0.000138	0.000207
Plants		
AB (0868B)	0.0000676	0.0000135
051 (0612)	0.000108	NJ
0868B(1)	0.0000586	0.000142

NJ: Not justified.

(1) Based upon D-DCP analytical data.

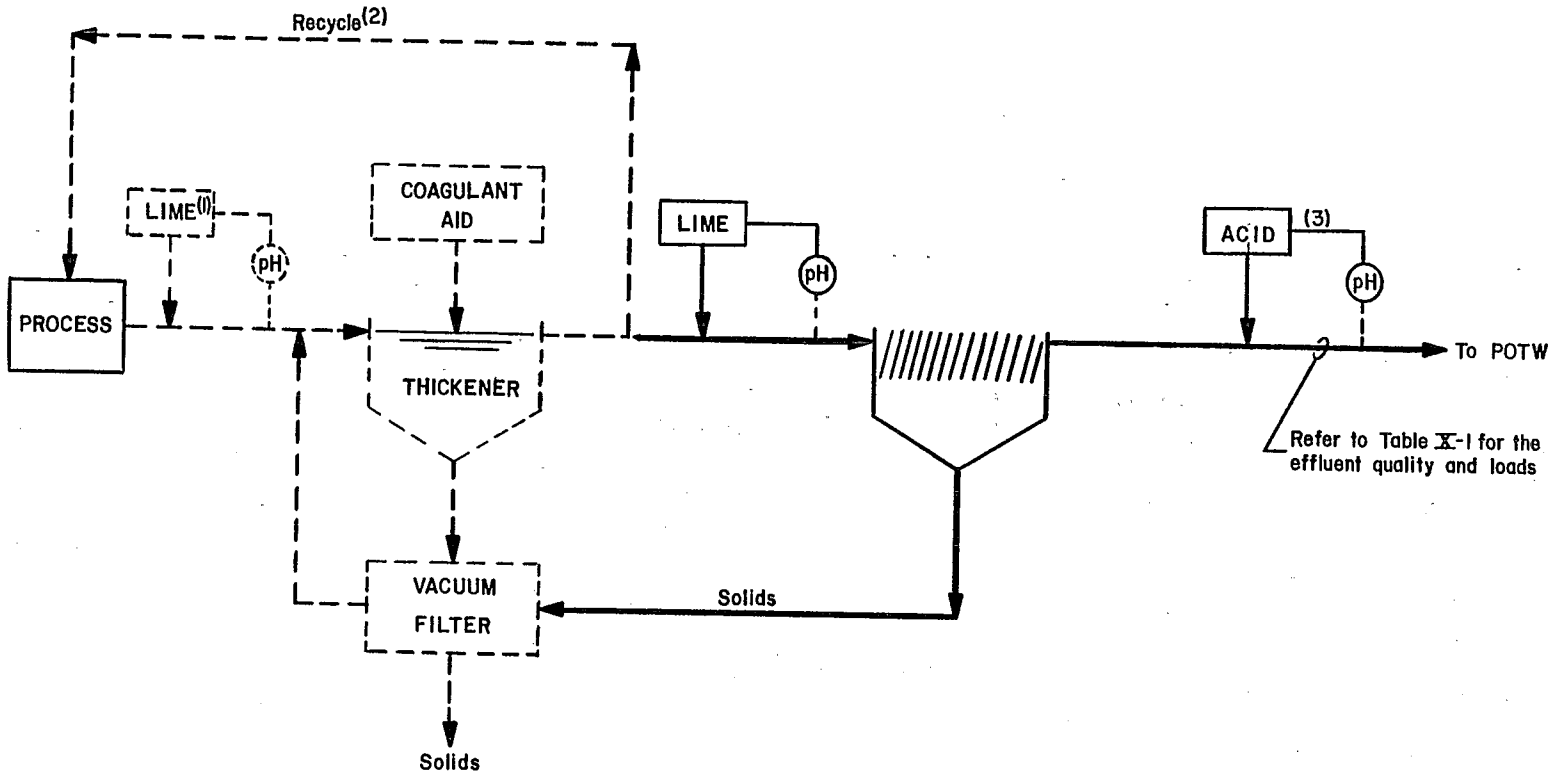

(1) pH controlled addition of lime is incorporated only in the open hearth model.

(2) Recycle rates: 95% - Basic Oxygen Furnace - Suppressed Combustion.
90% - Basic Oxygen Furnace - Open Combution.
94% - Open Hearth
95% - Electric Arc Furnace

(3) pH control with acid is a Basic Oxygen Furnace BPT step which is transferred for incorporation with the Basic Oxygen Furnace BAT model.

— — — BPT MODEL

——— BAT MODEL

ENVIRONMENTAL PROTECTION AGENCY

STEEL INDUSTRY STUDY
STEELMAKING SUBCATEGORY
WET SUBDIVISION
BAT MODELS

Dwn. 12/7/81

FIGURE X-1

STEELMAKING SUBCATEGORY

SECTION XI

BEST CONVENTIONAL POLLUTANT CONTROL TECHNOLOGY (BCT)

Introduction

The 1977 Amendments added Section 301(b)(2)(E) to the Act establishing "best conventional pollutant control technology" (BCT) for discharges of conventional pollutants from existing industrial point sources. Conventional pollutants are those defined in Section 304(a)(4) [biochemical oxygen demanding pollutants (BOD_5), total suspended solids (TSS), fecal coliform, and pH], and any additional pollutants defined by the Administrator as "conventional", (oil and grease, 44 FR 44501, July 30, 1979).

BCT is not an additional limitation but replaces BAT for the control of conventional pollutants. In addition to other factors specified in Section 304(b)(4)(B), the Act requires that BCT limitations be assessed in light of a two part "cost-reasonableness" test. American Paper Institute v. EPA, 660 F.2d 954 (4th cir. 1981). The first test compares the cost for private industry to reduce its conventional pollutants with the costs to publicly owned treatment works for similar levels of reduction in their discharge of these pollutants. The second test examines the cost-effectiveness of additional industrial treatment beyond BPT. EPA must find that limitations are "reasonable" under both tests before establishing them as BCT. In no case may BCT be less stringent than BPT.

EPA published its methodology for carrying out the BCT analysis on August 29, 1979 (44 FR 50732). In the case mentioned above, the Court of Appeals ordered EPA to correct data errors underlying EPA's calculation of the first test, and to apply the second cost test. (EPA had argued that a second cost test was not required.)

EPA has determined that the BAT technology is capable of removing significant amounts of conventional pollutants. However, EPA has not yet proposed or promulgated a revised BCT methodology in response to the American Paper Institute v. EPA decision mentioned earlier. Thus, it is not now possible to apply the BCT cost test to this technology option. Accordingly, EPA is deferring a decision on the appropriate BCT limitations until EPA proposes the revised BCT methodology.

STEELMAKING SUBCATEGORY

SECTION XII

EFFLUENT QUALITY ATTAINABLE THROUGH THE APPLICATION OF NEW SOURCE PERFORMANCE STANDARDS

Introduction

NSPS is to consider the degree of effluent reduction achievable through the application of the best available demonstrated control technology (BDT), processes, operating methods, or other alternatives, including where practicable, a standard permitting no discharge of pollutants. Zero discharge of process wastewater pollutants to a receiving stream is not demonstrated for the wet air pollution control system segments. As discussed in Section VII, there are no technologies, except evaporative systems, which could be generally applied to those steelmaking operations with wet air pollution control systems to achieve "zero discharge". Evaporative systems were found to be neither economical nor demonstrated for attaining "zero discharge" for wet air pollution control systems.

Identification of NSPS

Due to manufacturing advantages of BOF and electric arc furnace steelmaking open hearth furnace capacity has been and will continue to decline. Because the Agency does not expect any new open hearth furnaces to be built, NSPS alternative treatment systems were not developed and NSPS have not been promulgated for open hearth furnace steelmaking operations. Because of air pollution control considerations the Agency also believes it is not likely that any new semi-wet air pollution control systems will be installed on new steelmaking operations. Thus, NSPS alternatives were not considered and NSPS have not been promulgated for steelmaking operations with semi-wet air pollution control systems.

NSPS for Wet Air Pollution Control System Segments

A. NSPS Alternative 1

The first NSPS alternative treatment system is made up of the BPT model and BAT Alternative 1 treatment systems discussed in Sections IX and X. The initial treatment step involves gravity sedimentation of the process wastewaters in a thickener. Coagulant aid is added at the thickener inlet to enhance suspended solids removal. Sludges generated in the treatment process are dewatered by vacuum filtration. Most of the thickener effluent is recycled to the process, while a blowdown is delivered to a filter. In the EAF wet segment, the filter effluent is discharged directly, while in the BOF wet segments,

acid is added to the filter effluent for pH adjustment prior to discharge.

B. NSPS Alternative 2

This alternative includes the components of the BPT model and BAT Alternative 2 treatment systems. Lime addition and gravity sedimentation are included in place of filtration noted in the first alternative. As discussed in Section X, lime addition serves to reduce both dissolved and particulate toxic metal and fluoride effluent levels. Gravity sedimentation of the process wastewaters in this instance is accomplished in an inclined plate separator (See Section X).

C. NSPS Alternative 3

This alternative treatment system includes the BPT model and BAT Alternative 3 treatment systems. Vapor compression distillation of the blowdown is included in-place of filtration or lime precipitation. Vapor compression distillation is included to achieve zero discharge.

The NSPS alternative treatment systems described above for the wet steelmaking segments are presented in Figures VIII-2, VIII-3 and VIII-6. The effluent standards for wet steelmaking operations are presented in Table XII-1. Cost data for the NSPS alternative treatment systems are presented in Tables VIII-21 through VIII-23.

Rationale for Selection of NSPS

The NSPS alternative treatment systems for steelmaking operations are the same as the BPT model and BAT alternative treatment systems described in Sections IX and X. Thus, the rationale presented in those sections is applicable to new sources.

Treatment Technologies

The use of gravity sedimentation, lime addition, filtration, and vapor compression distillation treatment technologies in the wet air pollution control system segments has been previously discussed in Section X. These technologies are either demonstrated within this subcategory or, if not used within this subcategory, have been transferred from other subcategories or industries. The recommended treatment technologies are reliable and demonstrated and, subsequently, are applicable for NSPS.

The resulting effluent quality for the NSPS alternative treatment systems for wet steelmaking operations are presented in Table XII-1. As noted in Section X and in Appendix A of Volume I, the effluent levels are based upon the demonstrated capabilities of the wastewater treatment technologies. The pollutants listed on this table include only those pollutants limited at BAT and NSPS (refer to Section X for a review of the factors considered in selecting these pollutants).

Model Treatment System Flow Rates

The applied and effluent model flows developed for the BPT and BAT effluent limitations (refer to Sections IX and X) are applicable to the various NSPS treatment systems as well. The industry has demonstrated the ability to recycle steelmaking wastewaters to the levels specified by the model treatment system without scaling or fouling problems. The achievability of the model effluent flow rates has been demonstrated within the subcategory.

Selection of an NSPS Alternative

The Agency selected NSPS Alternative 2 as the model treatment system for wet BOF and EAF steelmaking operations. The control technology is depicted in Figure XII-1. This alternative was selected for the reasons noted in Section X regarding the selection of the BAT alternatives.

The promulgated NSPS and the respective model flow and effluent quality are presented in Table XII-1 in the columns headed NSPS Alternative 2.

Demonstration of NSPS

As noted in Section X, the model treatment technology used for the selected NSPS model treatment system has been installed on a full scale basis for wet steelmaking operations. Demonstration of the model treatment system flow rates is shown in Tables IX-3 through IX-5 for wet BOF and EAF steelmaking operations. Tables XII-2 and XII-3 present a demonstration of the achievability of NSPS based upon full scale operation at several plants in the industry. It should be noted that most of of of these plants are achieving most of the standards without the use of the model treatment technology. The plant (Plant 0684F) which has the treatment technology installed meets the limitations for those pollutants for which data are available. As noted in Section X the concentration basis for the standards (which are the same as the respective BAT limitations) were established from a pilot plant investigation conducted at Plant 0612. This plant is representative of wet EAF operations which generally have the most toxic metal pollutants. Based upon these data, the Agency has determined that NSPS for all wet steelmaking operations are demonstrated.

TABLE XII-1
ALTERNATIVE NSPS
STEELMAKING SUBCATEGORY

SUBDIVISION	SEGMENT			NSPS ALTERNATIVE No. 1		NSPS ALTERNATIVE No. 2		NSPS ALTERNATIVE No. 3	
				CONCENTRATION BASIS (mg/l)	EFFLUENT STANDARDS (kg/kkg of Product)	CONCENTRATION BASIS (mg/l)	EFFLUENT STANDARDS (kg/kkg of Product)	CONCENTRATION BASIS (mg/l)	EFFLUENT STANDARDS (kg/kkg of Product)
BASIC OXYGEN FURNACE	WET-SUPPRESSED COMBUSTION	DISCHARGE FLOW (gal/ton)		50	—	50	—	0	—
		TOTAL SUSPENDED SOLIDS	Ave.	15	0.00313	25	0.00522	—	—
			Max.	40	0.00834	70	0.0146	—	—
		pH		Within the range 6.0 to 9.0		Within the range 6.0 to 9.0		—	
		LEAD	Ave.	0.5	0.000104	0.3	0.0000626	—	—
			Max.	1.5	0.000313	0.9	0.000188	—	—
		ZINC	Ave.	0.5	0.000104	0.45	0.0000939	—	—
			Max.	1.5	0.000313	1.35	0.000282	—	—
	WET-OPEN COMBUSTION	DISCHARGE FLOW (gal/ton)		110	—	110	—	0	—
		TOTAL SUSPENDED SOLIDS	Ave.	15	0.00688	25	0.0115	—	—
			Max.	40	0.0184	70	0.0321	—	—
		pH		Within the range 6.0 to 9.0		Within the range 6.0 to 9.0		—	
		LEAD	Ave.	0.5	0.000229	0.30	0.000138	—	—
			Max.	1.5	0.000688	0.9	0.000413	—	—
		ZINC	Ave.	0.5	0.000229	0.45	0.000207	—	—
			Max.	1.5	0.000688	1.35	0.000620	—	—
ELECTRIC ARC FURNACE	WET AIR POLLUTION CONTROL SYSTEMS	DISCHARGE FLOW (gal/ton)		110	—	110	—	0	—
		TOTAL SUSPENDED SOLIDS	Ave.	15	0.00688	25	0.0115	—	—
			Max.	40	0.0184	70	0.0321	—	—
		pH		Within the range 6.0 to 9.0		Within the range 6.0 to 9.0		—	
		LEAD	Ave.	1	0.000459	0.3	0.000138	—	—
			Max.	3	0.00138	0.9	0.000413	—	—
		ZINC	Ave.	20	0.00918	0.45	0.000207	—	—
			Max.	60	0.0275	1.35	0.000620	—	—

The NSPS are based upon NSPS Alternative No. 2 (the selected alternative).

NOTE: NSPS for Open Hearth Furnace operations is reserved.

TABLE XII-2

JUSTIFICATION OF NSPS (KG/KKG)
STEELMAKING SUBCATEGORY
BASIC OXYGEN FURNACE

	TSS	Lead	Zinc	pH
Wet-Suppressed Combustion				
30-Day Average Standards	0.00522	0.0000626	0.0000939	6.0 to 9.0
Plants				
S (0060)	0.00478	0.0000261	NJ	NJ
032 (0384A)	NJ	NJ	0.0000928	NJ
034 (0856N)	NJ	0.0000529	0.0000171	NJ
038 (0684F)	0.00179	NA	0.0000037	7.0 to 8.0
0856N(1)	NJ	0.0000114	0.0000059	NJ
Wet-Open Combustion				
30-Day Average Standards	0.0115	0.000138	0.000207	6.0 to 9.0
Plants				
031 (0020B)	NJ	NJ	0.000051	7.6 to 8.2
036 (0112D)	NJ	0.000102	NJ	NJ

NJ: Not justified.
NA: No analysis performed.

(1) Based upon D-DCP analytical data.

TABLE XII-3

JUSTIFICATION OF NSPS (KG/KKG)
STEELMAKING SUBCATEGORY
ELECTRIC ARC FURNACE - WET

	TSS	Lead	Zinc	pH
30-Day Average Standards	0.0115	0.000138	0.000207	6.0 to 9.0
Plants				
AB (0868B)	NJ	0.0000676	0.0000135	8.4
051 (0612)	0.00620	0.000108	NJ	7.6
0868B(1)	NA	0.0000586	0.000142	NA
0612(1)	0.0116	NJ	NJ	6.8

NJ: Not justified.

(1) Based upon D-DCP analytical data.

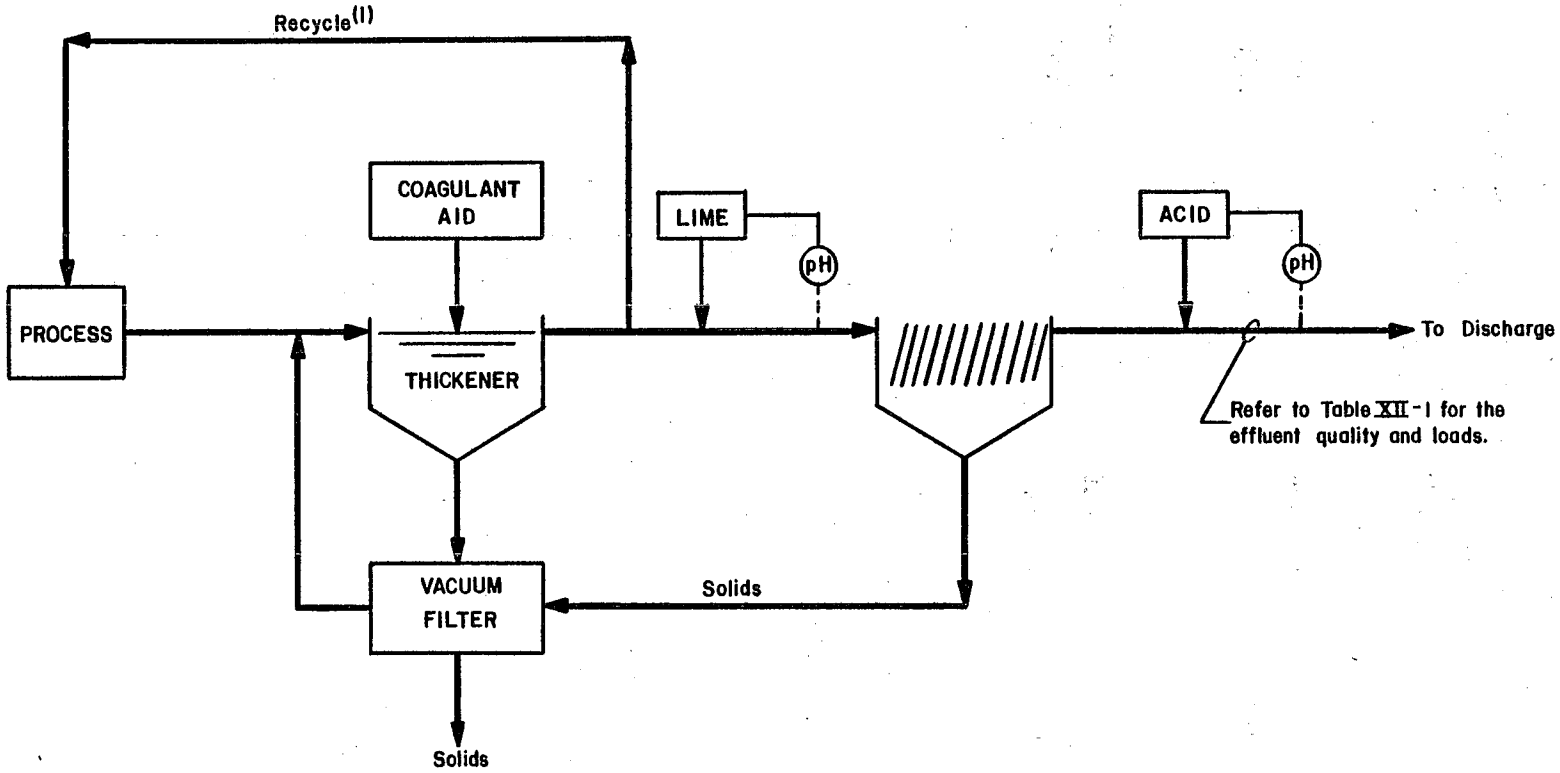

(1) Recycle rates: 95%-Basic Oxygen Furnace - Suppressed Combution
90%-Basic Oxygen Furnace - Open Combustion
95%-Electric Arc Furnace

ENVIRONMENTAL PROTECTION AGENCY			
STEEL INDUSTRY STUDY STEELMAKING SUBCATEGORY WET SUBDIVISIONS NSPS MODELS			
Dwn. 12/7/81			FIGURE XII-1

STEELMAKING SUBCATEGORY

SECTION XIII

PRETREATMENT STANDARDS FOR DISCHARGES TO PUBLICLY OWNED TREATMENT WORKS

Introduction

This section presents pretreatment systems available for steelmaking operations with discharges to publicly owned treatment works (POTWs). Three plants in the wet segments of the steelmaking subdivisions discharge process wastewaters to POTWs.

The general pretreatment and categorical pretreatment standards applying to steelmaking operations are discussed below.

General Pretreatment Standards

For detailed information on Pretreatment Standards refer to 46 FR 9404 et seq, "General Pretreatment Regulations for Existing and New Sources of Pollution," (January 28, 1981). See also, 47 FR 4518 (February 1, 1982). In particular, 40 CFR Part 403 describes national standards (prohibited and categorical standards), revision of categorical standards through removal allowances, and POTW pretreatment programs.

In establishing pretreatment standards for steelmaking operations, the Agency considered the objectives and requirements of the General Pretreatment Regulations.

Identification of Pretreatment Alternatives

Because wastewaters from existing semi-wet steelmaking operations are not discharged to POTWs and no new source semi-wet steelmaking operations are likely, the Agency has not promulgated PSES or PSNS for semi-wet steelmaking operations.

The alternative pretreatment systems for wet steelmaking operations considered by the Agency for both new and existing sources are the same as the BPT and BAT alternative treatment systems. These alternatives are set out below and illustrated in Figure VIII-1.

A. PSES/PSNS Alternative 1

Wet steelmaking wastewaters are processed in a thickener to remove suspended solids and metals contained in the suspended solids. A coagulant aid is added to enhance suspended solids removal. The thickener effluent is recycled with a small blowdown discharged to the POTW.

B. PSES/PSNS Alternative 2

The blowdown from this above system is filtered prior to discharge to remove particulate toxic metals.

C. PSES/PSNS Alternative 3

The blowdown from Alternative 1 is treated by lime precipitation and sedimentation to remove both particulate and dissolved toxic metals.

D. PSES/PSNS Alternative 4

The blowdown from Alternative 1 is processed in a vapor compression distillation system to eliminate the discharge. More information about these model treatment systems can be found in Sections IX and X. Model treatment system costs are presented in Tables VIII-18 through VIII-21 and the industry wide costs for PSES are presented in Table VIII-25.

The effluent flows and, in turn, the recycle components included in the pretreatment systems described above have been reviewed in Section IX. The pretreatment system effluent flows are identical to those of the BPT, BAT and NSPS models. Sedimentation, recycle, filtration, lime precipitation, further sedimentation, or evaporation are included in the pretreatment model systems in order to remove toxic metal pollutants.

Selection of a Pretreatment Alternative

As noted earlier, steelmaking wastewaters contain both dissolved and particulate toxic metals. The pretreatment alternatives described above are designed to control toxic metal pollutants, and thus are designed to minimize pass through of these pollutants at POTWs receiving steelmaking wastewaters. The four pretreatment alternatives accomplish between 96.5% and 100% removal of the toxic metal pollutants limited at PSES and PSNS.

PSES/PSNS Alternative 3 was selected as the model treatment system on which the promulgated PSES and PSNS are based. This alternative is the same as the BAT model treatment system for steelmaking operations. PSES/PSNS Alternative 3 provides for the greatest removal of toxic metal pollutants found in steelmaking wastewaters without the high costs associated with evaporative technologies. PSES/PSNS Alternatives 1 and 2 do not address control of dissolved toxic metals found in steelmaking wastewaters. The removal rates of toxic metals from untreated steelmaking wastewaters for Alternative 3 are compared to the POTW removal rates of those metals:

	PSES/PSNS Alternative 3	POTW
Lead	99.5 to 99.9%	48%
Zinc	99.7 to 99.8%	65%

As shown above, the PSES/PSNS model treatment system will prevent pass through of toxic metals at POTWs to a significantly greater degree than would occur if steelmaking wastewaters were discharged untreated to POTWs. The achievability of these standards is reviewed in Sections IX and X. The model treatment system is depicted in Figure XIII-1 and the PSES and PSNS are shown in Table XIII-1.

TABLE XIII-1
ALTERNATIVE PSES AND PSNS
STEELMAKING SUBCATEGORY

SUBDIVISION	SEGMENT			ALTERNATIVE No. 1		ALTERNATIVE No. 2		ALTERNATIVE No. 3		ALTERNATIVE No. 4	
				CONCENTRATION BASIS (mg/l)	EFFLUENT STANDARDS (kg/kkg of Product)	CONCENTRATION BASIS (mg/l)	EFFLUENT STANDARDS (kg/kkg of Product)	CONCENTRATION BASIS (mg/l)	EFFLUENT STANDARDS (kg/kkg of Product)	CONCENTRATION BASIS (mg/l)	EFFLUENT STANDARDS (kg/kkg of Product)
BASIC OXYGEN FURNACE	WET-SUPPRESSED COMBUSTION	DISCHARGE FLOW(gal/ton)		50	—	50	—	50	—	0	—
		LEAD	Ave.	0.5	0.000104	0.5	0.000104	0.3	0.0000626	—	—
			Max.	1.5	0.000313	1.5	0.000313	0.9	0.000188	—	—
		ZINC	Ave.	0.7	0.000146	0.5	0.000104	0.45	0.0000939	—	—
			Max.	2.1	0.000438	1.5	0.000313	1.35	0.000282	—	—
	WET-OPEN COMBUSTION	DISCHARGE FLOW(gal/ton)		110	0	110	—	110	—	0	—
		LEAD	Ave.	0.5	0.000229	0.5	0.000229	0.30	0.000138	—	—
			Max.	1.5	0.000688	1.5	0.000688	0.9	0.000413	—	—
		ZINC	Ave.	0.7	0.000321	0.5	0.000229	0.45	0.000207	—	—
			Max.	2.1	0.000964	1.5	0.000688	1.35	0.000620	—	—
OPEN HEARTH FURNACE	WET AIR POLLUTION CONTROL SYSTEMS	DISCHARGE FLOW(gal/ton)		110	0	110	—	110	—	0	—
		LEAD	Ave.	1.5	0.000688	0.35	0.000161	0.30	0.000138	—	—
			Max.	4.5	0.00207	1.05	0.000482	0.9	0.000413	—	—
		ZINC	Ave.	5	0.00229	5	0.00229	0.45	0.000207	—	—
			Max.	15	0.00688	15	0.00688	1.35	0.000620	—	—
ELECTRIC ARC FURNACE	WET AIR POLLUTION CONTROL SYSTEMS	DISCHARGE FLOW(gal/ton)		110	0	110	—	110	—	0	—
		LEAD	Ave.	1.5	0.000688	1	0.000459	0.3	0.000138	—	—
			Max.	4.5	0.00207	3	0.00138	0.9	0.000413	—	—
		ZINC	Ave.	20	0.00918	20	0.00918	0.45	0.000207	—	—
			Max.	60	0.0275	60	0.0275	1.35	0.000620	—	—

The PSES and PSNS are based upon PSES/PSNS No. 3 (The selected alternative).

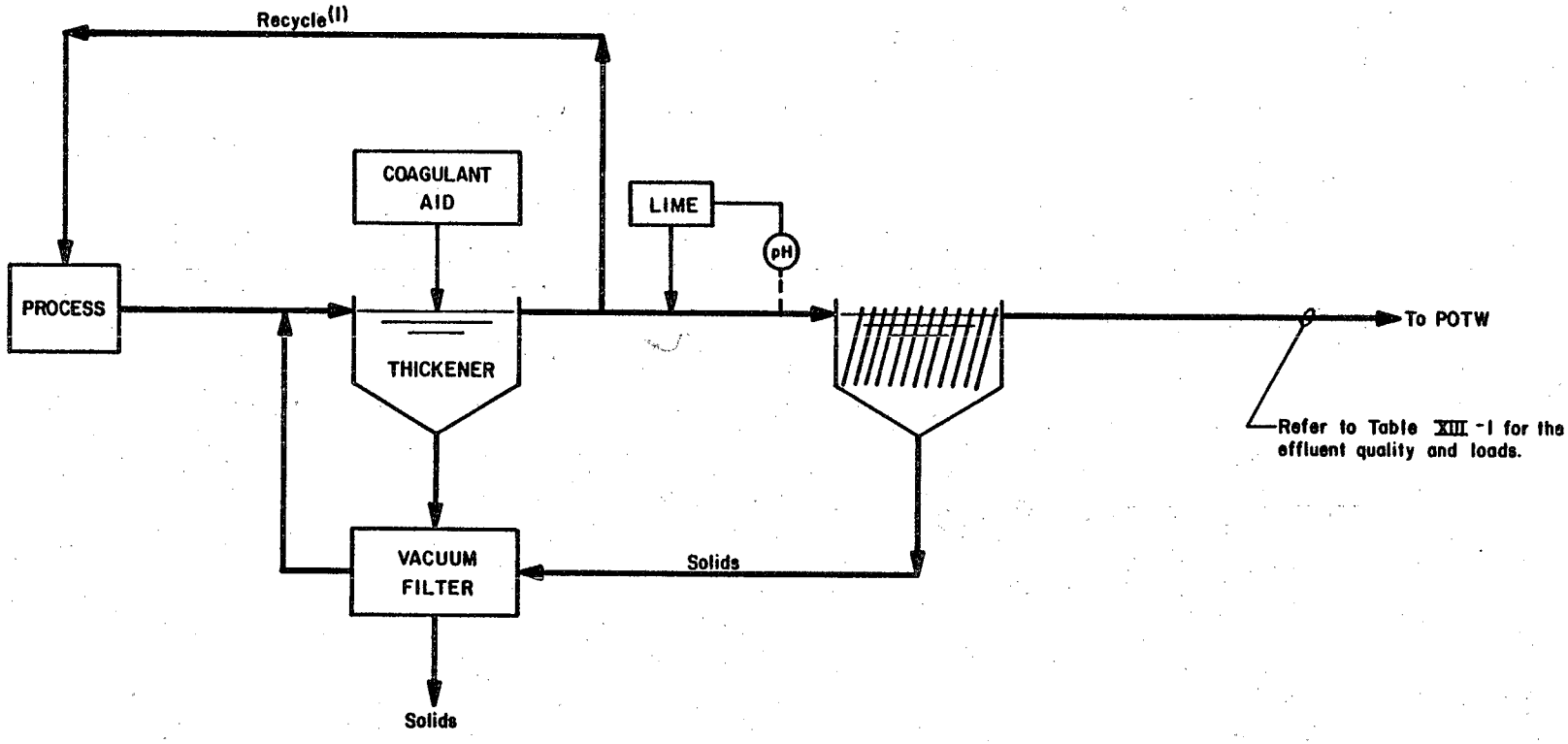

(1) Recycle rates: 95%-Basic Oxygen Furnace - Suppressed Combustion
90%-Basic Oxygen Furnace - Open Combustion -
95%-Electric Arc Furnace

ENVIRONMENTAL PROTECTION AGENCY			
STEEL INDUSTRY STUDY STEELMAKING SUBCATEGORY WET SUBDIVISIONS PRETREATMENT MODELS			
Dwn. 7/8/80			FIGURE XIII-1

VACUUM DEGASSING SUBCATEGORY

SECTION I

PREFACE

The USEPA has promulgated effluent limitations and standards for the steel industry pursuant to Sections 301, 304, 306, 307 and 501 of the Clean Water Act. The regulation contains effluent limitations guidelines for best practicable control technology currently available (BPT) and best available technology economically achievable (BAT), as well as pretreatment standards for new and existing sources (PSNS and PSES) and new source performance standards (NSPS). Effluent limitations guidelines for best conventional pollutant control technology (BCT) for vacuum degassing operations have been reserved for future consideration.

This part of the Development Document highlights the technical aspects of EPA's study of the Vacuum Degassing Subcategory of the Iron and Steel Industry. Volume I of the Development Document addresses general issues pertaining to the industry, while other volumes contain specific subcategory reports.

VACUUM DEGASSING SUBCATEGORY

SECTION II

CONCLUSIONS

Based upon this study, a review of previous studies by EPA, and comments received on the proposed regulation (46 FR 1858), the Agency has reached the following conclusions:

1. The Agency retained one subcategory for all vacuum degassing operations.

2. The BPT effluent limitations for total suspended solids and pH are identical to those originally promulgated in 1974. Sampled plant and long-term analytical data substantiate the appropriateness of the originally promulgated BPT effluent limitations for vacuum degassing operations.

3. Based upon responses from the industry to EPA questionnaires, the Agency believes that the recycle components in use at vacuum degassing operations present no scaling, fouling, or plugging problems.

4. Sampling and analysis of vacuum degassing process wastewaters revealed significant concentrations of five toxic metal pollutants. Discharges of these toxic pollutants can be reduced by available economically achievable technologies. Consequently, the Agency has promulgated BAT effluent limitations for lead and zinc which will effectively control the discharge of the toxic metal pollutants. A summary of the pollutant discharges at the BPT and BAT levels of treatment are shown below.

	Direct Discharges Pollutant Loadings (tons/year)		
	Raw Waste	BPT	BAT
Flow, MGD	55.4	0.9	0.9
TSS	5066	48.2	31.2
Toxic Metals	667	8.4	1.3

5. Based upon facilities in place as of July 1, 1981, the Agency estimates the following costs are required to comply with the BPT and BAT effluent limitations for the vacuum degassing subcategory. The Agency has determined that the effluent reduction benefits associated with compliance with the limitations and standards justify these costs.

	Costs (Millions of July 1, 1978 Dollars)					
	Investment Costs			Annual Costs		
	Total	In-Place	Required	Total	In-Place	Required
BPT	27.9	20.4	7.5	4.1	3.0	1.1
BAT	3.0	0.2	2.8	0.4	0.03	0.4

NOTE: There are no indirect dischargers in this subcategory.

The Agency has also determined that the effluent reduction benefits associated with compliance with new source standards (NSPS, PSNS) justify those costs.

6. The Agency has not promulgated BCT effluent limitations for this subcategory. This section of the regulation is reserved for future consideration.

7. The Agency has promulgated NSPS for vacuum degassing operations equivalent to the BAT effluent limitations and which are based upon the same model treatment system.

8. The Agency has promulgated pretreatment standards for new and existing sources (PSNS and PSES) which limit the amounts of toxic pollutants which can be discharged to POTWs. These standards are intended to eliminate the pass through of toxic metal pollutants through POTW systems.

9. With regard to the "remand issues," the Agency concludes that:

   a. The Agency projects that the use of cooling towers (components of the BPT and BAT model treatment systems) will result in the evaporation of an additional 0.25 MGD of water for the subcategory. This volume represents about 0.45% of the total subcategory water usage. The Agency considers the impact of the consumptive use of water to be minimal and justified in light of the effluent reduction benefits associated with compliance with these requirements.

   b. The Agency found that retrofit costs are not a significant portion of total treatment system costs, and that the costs of its model treatment systems are sufficient to cover expected retrofit costs for most plants. The Agency also found that plant age and size are not significant factors regarding the ability to retrofit pollution control systems.

   c. With respect to the court remand regarding the total suspended solids concentrations used in developing prior BAT limitations and NSPS, the Agency has modified the model treatment systems and the suspended solids concentrations used to develop the NSPS. The suspended solids concentrations relied upon by the Agency as a basis for NSPS are demonstrated at a number of steel plant sites. The

Agency has not established BAT limitations for suspended solids and has reserved BCT limitations for this subcategory.

10. Although operators of three vacuum degassing facilities report that zero discharge has been or is being achieved, the Agency does not believe that zero discharge can be achieved at all vacuum degassing operations without the use of costly evaporative technologies. The Agency did not receive any additional information or data in response to its solicitation of information on this issue presented in the preamble to the proposed regulation.

11. Table II-1 presents the treatment model flow and effluent quality data used to develop the BPT effluent limitations as well as the BPT limitations for the vacuum degassing subcategory. Table II-2 presents the treatment model flow and effluent quality data used to develop the BAT effluent limitations, NSPS, PSES, and PSNS, as well as the limitations and standards for the vacuum degassing subcategory.

12. The cost data presented in conclusion no. 5 above are different than those used by the Agency in the economic impact analysis completed for this regulation. The Agency selected BAT Alternative 2 vs. Alternative 1 after the economic impact analysis was completed. The difference in required costs for these alternatives is $2.04 million for vacuum degassing operations. The Agency does not consider this difference or the small difference in new source costs to be significant in terms of whether or not the effluent reduction benefits are justified. Differences of this magnitude were accounted for in the sensitivity analysis conducted as part of the economic impact analysis.

TABLE II-1

BPT MODEL FLOW, MODEL EFFLUENT QUALITY,
AND EFFLUENT LIMITATIONS
VACUUM DEGASSING SUBCATEGORY

Pollutant	Treatment Model Effluent Quality[1]		Effluent Limitations (kg/kkg of Product)	
	Daily Maximum Concentration[1]	30-Day Average Concentration[1]	Daily Maximum Limitations	30-Day Average Limitations
Flow, gal/ton	25		NA	
pH, Units	6.0 to 9.0		6.0 to 9.0	
Total Suspended Solids	150	50	0.0156	0.00521

NA: Not applicable

(1) Concentrations are expressed in mg/l unless otherwise noted.

TABLE II-2

MODEL FLOW, MODEL EFFLUENT QUALITY,
AND EFFLUENT LIMITATIONS AND STANDARDS
VACUUM DEGASSING SUBCATEGORY

	Pollutant	Treatment Model Effluent Quality(1) Daily Maximum Concentrations	Treatment Model Effluent Quality(1) 30-Day Average Concentrations	BAT Effluent Limitations(2) Daily Maximum Limitations	BAT Effluent Limitations(2) 30-Day Average Limitations	BCT Effluent Limitations
	Flow, gal/ton	25		NA		
	pH, Units	6.0 to 9.0		NA	NA	(3)
	Total Suspended Solids	70	25	NA	NA	
122	Lead	0.9	0.3	0.0000939	0.0000313	
128	Zinc	1.35	0.45	0.000141	0.0000469	

	Pollutant	NSPS(2) Daily Maximum Standards	NSPS(2) 30-Day Average Standards	PSES(2) Daily Maximum Standards	PSES(2) 30-Day Average Standards	PSNS(2) Daily Average Standards	PSNS(2) 30-Day Average Standards
	Flow, gal/ton	NA		NA		NA	
	pH, Units	6.0 to 9.0		NA		NA	
	Total Suspended Solids	0.00730	0.00261	NA	NA	NA	NA
122	Lead	0.0000939	0.0000313	0.0000939	0.0000313	0.0000939	0.0000313
128	Zinc	0.000141	0.0000469	0.000141	0.0000469	0.000141	0.0000469

NA: Not applicable

(1) Concentrations are expressed in mg/l unless otherwise noted.
(2) kg/kkg of product
(3) BCT is reserved.

VACUUM DEGASSING SUBCATEGORY

SECTION III

INTRODUCTION

General Discussion

Vacuum degassing is the process of removing gases from molten steel under a vacuum to produce steels of high metallurgical standards. While this technique has been used for many years, widespread application of the vacuum degassing process to high tonnages of carbon and low alloy steels was not possible until recent years when large capacity vacuum degassing units were developed. In the United States, the application of vacuum degassing to high tonnage steel production began in the mid-1950's.

Steam jet ejectors are commonly used to generate the vacuum for the high tonnage vacuum degassing units. Subsequently, barometric condensers (intercondensers) are used to condense the steam used in the ejectors. After cooling water is sprayed into the intercondensers, the heated waters and condensed steam are discharged to a hot well. During the application of the vacuum to the molten steel, certain elements which have a relatively higher vapor pressure (such as manganese and zinc) are volatilized and removed with the gases. These gases and vaporized elements pass through the steam jet ejectors into the intercondensers thus contaminating the cooling waters.

This report reviews wastewater characteristics and treatability, alternative treatment systems, and the effluent limitations and standards considered by the Agency for vacuum degassing operations. Figures III-1 and III-2 illustrate the eight different degassing processes currently used in the United States.

The Agency obtained process information and wastewater quality data through sampling visits at six vacuum degassing plants. These visits were conducted during the original guidelines and the subsequent toxic pollutant surveys. Four plants were sampled during the original guidelines survey. Of these four, one has since changed from vacuum degassing to Argon Oxygen Decarburization. The Agency sampled three degassing plants during the recent toxic pollutant survey; one of which was also sampled during the original guidelines survey. The plants which were sampled during either survey are listed in Table III-1.

Data Collection Activities

In 1976, basic questionnaires (DCPs) were sent to every vacuum degassing operation in the United States. In response, the Agency received information regarding applied and discharge flow rates,

existing treatment systems, plant capacities and modes of operation for 35 vacuum degassing sites with 40 individual degassing units. Table III-2 presents an inventory of all vacuum degassing plants and summarizes the data obtained from the industry.

After receiving and reviewing the DCP responses, the Agency sent detailed questionnaires (D-DCPs) for selected degassing plants to obtain information on long-term effluent quality, treatment costs, and the vacuum degassing process. D-DCP responses were received for six degassing plants. Table III-3 summarizes the data base for this report as derived from the above sources of information.

Vacuum degassing limitations and standards were originally promulgated on the basis of the steam intercondenser cooling water discharges. Based upon an examination of the additional data received since that time, the Agency has concluded that no further subdivision of this subcategory is appropriate.

Description of Vacuum Degassing Operations

Vacuum degassing is the process in which molten steel is subjected to a vacuum to remove gases (principally hydrogen, oxygen, and nitrogen) from the molten steel. The gases can impart deterimental qualities to certain finished steel products if they are not removed. Hydrogen, in particular, can cause flaking and embrittlement of steel. Oxygen and nitrogen, when in combination with other elements, can remain in the steel as unwanted inclusions.

The hydrogen gas is removed when the partial pressure of hydrogen above the molten bath is reduced. Carbon and oxygen are removed from steel by reaction with one another as the pressure above the molten bath is reduced. The carbon monoxide generated by this reaction is released, thus reducing the carbon and oxygen content of the molten steel. There are seven vacuum degassing processes and one nonvacuum degassing process in use in the United States. The nonvacuum process is called Argon degassing. Descriptions of the degassing processes follow (refer to Figures III-I and III-2 for illustrations of these processes):

1. Vacuum Ingot Degassing is the method in which an ingot mold is stationed inside an enclosed vacuum chamber. The hot metal ladle is then positioned on top of the vacuum chamber. The hot metal is exposed to the vacuum as it travels through a small opening in the vacuum chamber roof to the ingot mold. This method is used for degassing ingots for large forgings.

2. Vacuum Stream Degassing is a method similar to that of ingot degassing. However, instead of an ingot mold, an empty hot metal ladle is stationed inside the vacuum chamber. The hot metal ladle is mounted on top of the vacuum chamber and metal is poured through a small opening in the roof of the chamber.

3. Vacuum Tap Degassing involves the pouring of molten steel from the furnace into a tundish which is mounted upon the steel ladle. The ladle in this method is fitted with a cover and, thus, serves as the vacuum chamber.

The three methods described above are commonly known as stream degassing methods.

4. Vacuum Flush Degassing is the method in which the hot metal ladle is stationed in a vacuum chamber and an inert gas (flush gas), such as argon, is bubbled through the hot metal under reduced pressures. The bubbles of flush gas provide sites into which carbon monoxide, hydrogen and nitrogen gases can diffuse and be carried out of the molten metal.

5. Vacuum Lift Degassing, commonly identified as the D-H process, was developed by Dortmund-Horder Huttenunion AG of Germany. For this method, the molten steel is tapped into a teeming ladle which is then transferred to a degassing station consisting of a preheated refractory lined chamber equipped with a "snorkel" tube in the bottom. The chamber is lowered into the ladle of steel and then evacuated to a low pressure. The pressure differential between the low pressure within the chamber and atmospheric pressure acting upon the surface of the steel bath forces a column of molten steel into the snorkel tube and the chamber. The release of gases caused by the introduction of steel to a low pressure area results in turbulence of the molten steel. By alternately raising and lowering the snorkel tube vacuum chamber, all of the molten steel is subjected to low pressure and absorbed gases are released to the atmosphere. After appropriate alloying additions are made, the vacuum chamber is lifted and removed. The steel is then ready for casting or teeming of ingots. This particular method can accommodate high tonnages of steel.

6. Vacuum Circulation Flow Degassing, commonly referred to as the R-H process, was developed by Rheinstahl Huttenwerke HG and W.C. Heraeus GmbH of West Germany. The equipment consists of a vacuum chamber with two snorkel tubes which are immersed in the molten steel. Once the tubes are immersed, the vacuum valves are opened. Argon gas under pressure is introduced in one snorkel leg. As the gas injection creates a pressure differential, the molten steel rises in one tube of the vacuum chamber and flows down the other tube back to the ladle. The molten steel is continuously circulated until the desired level of gas removal is achieved. An alternative method involves the use of electromagnetic induction pumping to recirculate the molten steel through the snorkel tubes.

7. Vacuum Induction Degassing is a method of stationing the hot steel ladle in a vacuum chamber equipped with low frequency electric current induction coils which stir the molten metal. The hot metal circulates from the bottom to the top of the ladle, thus exposing the circulating hot metal to the vacuum.

8. Argon Degassing is a method of degassing which, instead of providing a vacuum, uses argon as an inert shielding gas. Argon is bubbled through the hot metal in a covered ladle. The argon displaces air from the hood atmosphere as carbon monoxide, hydrogen, and oxygen diffuse into the bubbles at rates influenced by the oxygen and carbon content of the steel. Typical argon requirements per ton of steel are about 40 cubic feet for a period of 12-23 minutes, depending upon the amount of molten steel treated. The argon degassing method is the most expensive of all degassing methods.

The vacuum degassing operation serves as an intermediate step in steelmaking. After the hot metal has been refined to steel in basic oxygen, electric arc, or open hearth furnaces, the molten steel is transferred to the vacuum degasser for further refining. Degassing is performed when required by steel order specifications. Therefore, not all steel is degassed. After the molten steel is degassed, it is transferred to a continuous casting machine or teemed into ingot molds.

There are two methods of developing the vacuum for degassing cycles. One method involves the use of vacuum pumps, which are generally used for smaller tonnage operations, or stream degassing. Since no process wastewaters are generated in this type of vacuum degassing operation these operations are not included in this regulation. The second method uses multiple stage steam jet ejectors. Four to six stages are normally used. Barometric steam condensers, which use water as the cooling medium, are employed between ejector stages. The water from the condensers is discharged to a hot well through a barometric leg (a pipe which rises 32 feet above the hot well and is immersed for sealing in the hot well). Any of the gases emerging from the vacuum degassing operation are intermittently mixed with steam and water from the condensers. The condensed steam and barometric condenser waters thus comprise the wastewater discharges from vacuum degassing operations.

The selection of the degassing process is influenced by steel specifications, heat scheduling, plant layout, and limitations in the steelmaking process to achieve given steel specifications. All degassing methods require a 5 to 30 minute degassing cycle. Generally the high tonnage operations use the R-H or D-H processes.

TABLE III-1

SUMMARY OF SAMPLED PLANTS
VACUUM DEGASSING

Sample Code	Plant Reference Code	Steel Type
E*	0020B	Specialty
062	0496	Carbon
AC**	0584F	Carbon
065**	0584F	Carbon
068	0684H	Specialty
G	0856R	NR
AD	0868B	Carbon

* : This plant has changed from vacuum degassing to argon oxygen decarburization since it was sampled.

**: This plant was sampled during both the original guidelines and toxic pollutant surveys. However, the data gathered during the toxic pollutant survey is used in preference to that obtained during the original survey, as the toxic survey data is more recent and thus considered to be more representative of current practices.

NR: Not reported.

TABLE III-2

GENERAL SUMMARY TABLE
VACUUM DEGASSING

Plant Code	Type of Unit	Type of Steel	Plant Age	Production (Tons/Day) Rated Capacity	Production (Tons/Day) 1976 Production	Flows (Gal/Ton) Applied Flow	Flows (Gal/Ton) Discharge Flow	Treatment Components Process Treatment	Treatment Components Central Treatment	Operating Mode	Discharge Mode
0020B	**	**	**	**	**	**	**	**	**	**	**
0060	R-H	CS-75,HSLA-25	1971	4500	1499	272	272	None	PSP,FLL, FLO1,CL	RET100	Indirect Discharge
0060D	D-H	ES-63,CS-13.5 HSLA-12,SS-10	1969	3000	1758	432	82	CL,PSP, (CT)	None	RTP81 BD19	Direct
0060F	R-H	HSLA-100	1970	1100	380	-	-	CT,PSP	SL	RET(UNK) RTP(UNK) BD(UNK)	Direct
0060J	-	HSLA-40,ES-31 CS-18,SS-6,AT-5	1965	120	31	-	-	(PSP),(CT)	-	(RTP)	-
0088A	Ladle Degassing	Other-70,AT-29 CS-1	1963	450(1)	202(1)	[743]	[10.6]	None	FLP,NL, CL,SS,VF, (CT)	RTP98.6 RET1.4	Indirect
0088A	Ladle Degassing	Other-70,AT-29 CS-1	1968	450(1)	202(1)	[743]	[10.6]	None	FLP,NL, CL,SS,VF, (CT)	RTP98.6 RET1.4	Indirect
*0112	-	HSLA-97,SS-3	1957	450	326	-	-	-	-	-	-
*0112B	-	CS-85,HSLA-15	1973	1860	517	-	-	-	-	-	-
*0156A	-	**	**	**	**	-	-	-	-	-	-
*0168	-	HSLA-51,CS-25, AT-14,SS-5, Other-5	1968	450	361	-	-	-	-	-	-
0240A	-	Other-70,CS-25, AT-5	1962	1100	872	-	-	(PSP),(CT)	-	(RTP)	-
0248B	D-H	AT-55,CS-40, HSLA-5	1969	2000	589	420	0	-	-	RTP100	Zero Discharge
*0424A	-	HSLA-60,CS-40	1969	800	63	-	-	-	-	-	-
0436	Stream Droplet	HSLA-75,CS-25	1966	350	196	-	-	-	-	-	-
0496	D-H	CS-60,HSLA-40	1965	1600	859	[141]	[0]	Cloth Belt Filter	CLA,FFSP, FLP,PSP, Reservoir,	RTP100	Zero Discharge

TABLE III-2
GENERAL SUMMARY TABLE
VACUUM DEGASSING
PAGE 2

Plant Code	Type of Unit	Type of Steel	Plant Age	Production (Tons/Day) Rated Capacity	Production (Tons/Day) 1976 Production	Flows (Gal/Ton) Applied Flow	Flows (Gal/Ton) Discharge Flow	Treatment Components Process Treatment	Treatment Components Central Treatment	Operating Mode	Discharge Mode
*0576	-	Other-89,HSLA-6 CS-4.4,SS-0.6	1960	260	214	-	-	-	-	-	-
0576A	Stream Droplet	Other-51,AT-10, ES-10,CS-8,SS-1	1959	450	221	475	475	None	None	OT	Direct
0584F	-	CS-100	1968	6554	4160	[240]	[4.4]	PSP,CT	-	RTP98.2 BD1.8	Direct
0684E (No.3 Shop)	Ladle Degassing (Not in operation)	SS-90, Other-10	1962	979	120	490	9.8	CT,FLL, FLO1,FLP, CL	-	RTP98 BD2	Direct
0684E (No.4 Shop)	Ladle Degassing	Other-93.8, CS-6.2	1968	2640	637	[3064]	[11.5]	CT,FLL, FLO1,FLP, CL	None	RTP99.6 BD0.4	Direct
0684H	-	LA-85,CS-15	1965	1200	456	[682]	[682]	(PSP),(CT)	-	(RTP)	-
*0684U	-	HSLA-92,CS-8	1958	360	310	-	-	-	-	-	-
0696A	-	CS-76,Other-24	1976	800	43	-	-	(PSP),(CT)	-	(RTP)	-
*0724A	-	AS-100	-	450	340	-	-	-	-	-	-
*0776E	-	HSLA-100	1958	150	64	-	-	-	-	-	-
0796A(3) (2 units)	Stream Droplet	HSLA-95.5,CS-4.5 SS-0.05	1964	2496(2)	2208(2)	-	-	(PSP),(CT)	-	(RTP)	-
*0796C	-	HSLA-85,AT-15	1957	90	17	-	-	-	-	-	-
*0796C	-	HSLA-90,AT-10	1965	30	22	-	-	-	-	-	-
*0804A	-	HSLA-93,CS-5, SS-2	1958	150	50	178	178	-	-	OT	Direct
0804B	Stream Droplet	HSLA-60,CS-40	1972	210	138	1071	33	None	SL,SS	RTP97 BD3	Direct
*0840B	-	Other-90,HSLA-10	1970	**	**	-	-	-	-	-	-
0856F(3) (2 units)	D-H	CS-100	1972	1600	535	262	262	PSP,(CT)	None	(RTP)	Direct

TABLE III-2
GENERAL SUMMARY TABLE
VACUUM DEGASSING
PAGE 3

Plant Code	Type of Unit	Type of Steel	Plant Age	Production (Tons/Day) Rated Capacity	Production (Tons/Day) 1976 Production	Flows (Gal/Ton) Applied Flow	Flows (Gal/Ton) Discharge Flow	Treatment Components Process Treatment	Treatment Components Central Treatment	Operating Mode	Discharge Mode
0856H	-	HSLA-50,AT-30 CS-20	1964	960	300	-	-	(PSP),(CT)	-	(RTP)	-
0856R	Ladle Degassing	-	1956	340	208	[436]	[436]	(PSP),(CT)	-	(RTP)	Direct
0868B	-	CS-78.5, HSLA-21.5	1971	1560	1274	[195]	[2.3]	None	PSP,CT, Filters	RTP98.8 BD1.2	Direct
0896	-	HSLA-90,CS-5 AT-5	1968	50	35	-	-	(PSP),(CT)	-	(RTP)	-
0946A	-	AT-95,CS-5	1967	3480	90	-	-	(PSP),(CT)	-	(RTP)	-

KEY TO SYMBOLS

- : Inadequate company response.
* : No air or water pollution control equipment.
** : Confidential information.
[]: Data listed in brackets was obtained via the responses to the D-DCP questionnaire or during sampling visits.
( ): Components enclosed in brackets were installed since 1/1/78.

KEY TO ABBREVIATIONS

Type of Unit:

R-H: Ruhrstahl-Heraeus
D-H: Dortmund-Horder

Type of Steel:

AS : Alloy Steel
AT : Alloy Tool
CS : Carbon Steel
ES : Electrical Steel
HSLA: High Strength Low Alloy
LA : Low Alloy
SS : Stainless Steel

TABLE III-2
GENERAL SUMMARY TABLE
VACUUM DEGASSING
PAGE 4

Treatment Components and Operating Mode:

FL01: Flocculation with ferric chloride.
For a description of the treatment components and operating modes, see Table VII-1.

Footnotes:

(1) Tonnage figures are estimates since the DCP provided only total tonnages for both degassers.
(2) Combined tonnage for the two degassers.
(3) Two identical degassing units. The data presented on this table is the same for both degassers.

TABLE III-3

VACUUM DEGASSING - DATA BASE

	No. of Plants	% of Total No. of Plants	Daily Capacity of Plants (tons)	% of Total Daily Capacity
Plants Sampled for Original Study	4	11.4	8874	20.8
Plants Sampled for Toxic Pollutant Survey	3 incl. 1 above	8.6 incl. 2.9 above	9354 incl. 6554 above	21.9 incl. 15.3 above
Total Plants Sampled	6	17.1	11,674	27.3
Plants Solicited via D-DCP	6 incl. 3 above	17.1 incl. 8.6 above	13,714 incl. 8,574 above	32.1 incl. 20.1 above
Plants Sampled and/or Solicited via D-DCP	9	25.7	16,814	39.4
Plants Responding to DCP	35	100	42,705	100

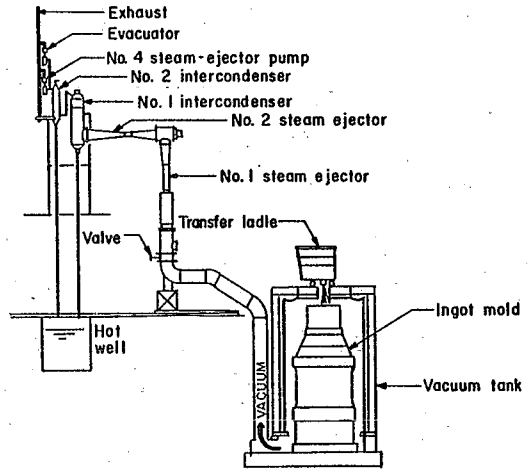

VACUUM INGOT DEGASSING

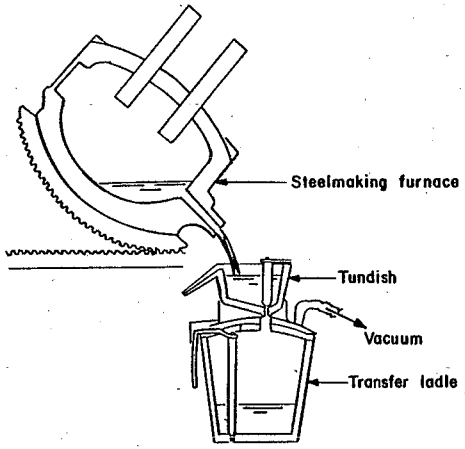

VACUUM TAP DEGASSING

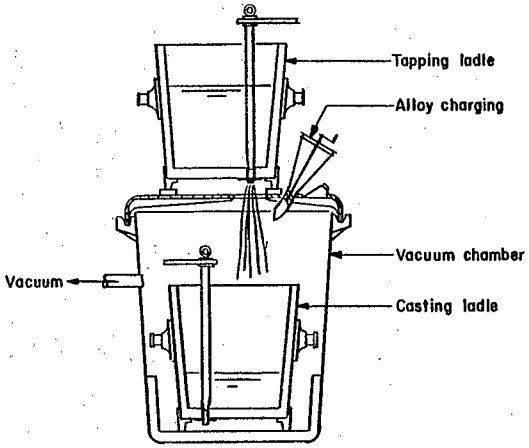

VACUUM-STREAM-DEGASSING

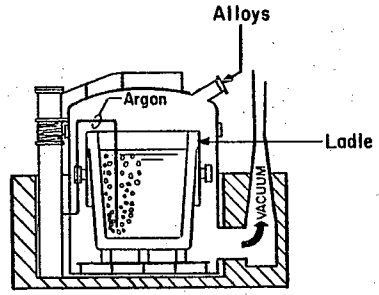

VACUUM FLUSH DEGASSING

ENVIRONMENTAL PROTECTION AGENCY			
STEEL INDUSTRY STUDY VACUUM DEGASSING PROCESS FLOW DIAGRAMS			
Dwn. 9/7/79			FIGURE III-1

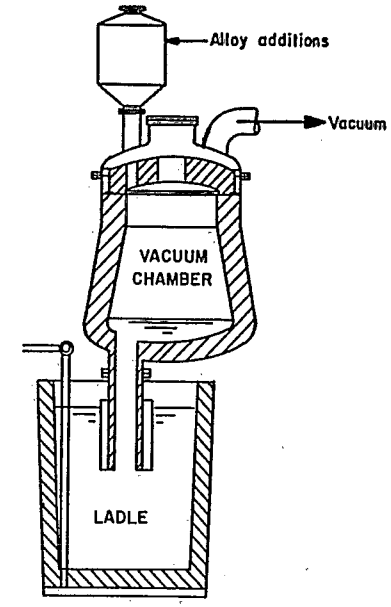

VACUUM LIFTER DEGASSING

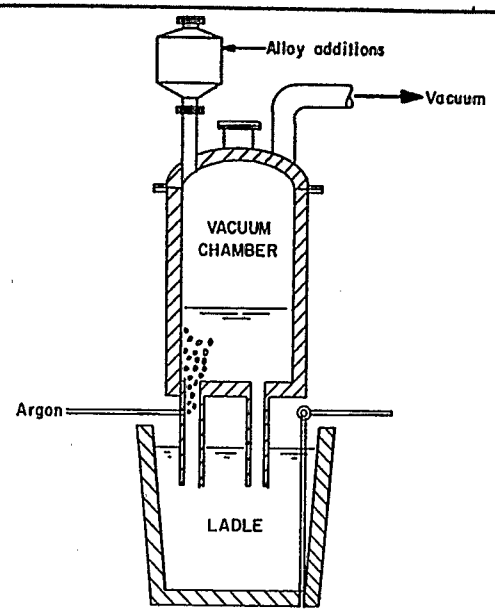

VACUUM CIRCULATING-FLOW DEGASSING

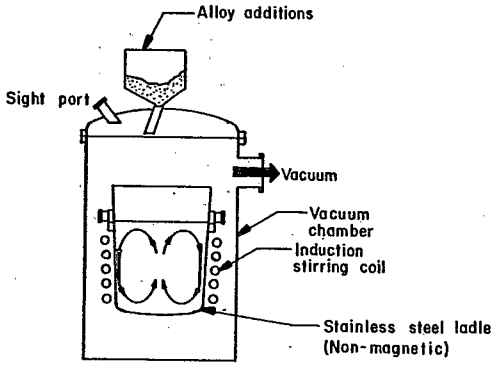

VACUUM INDUCTION DEGASSING

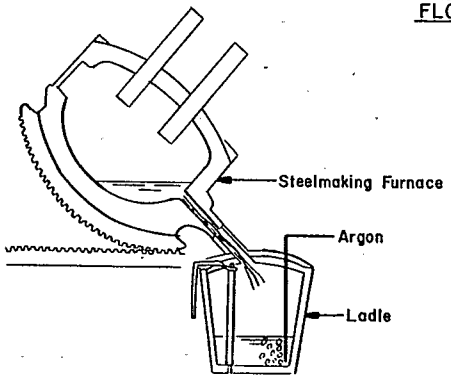

ARGON DEGASSING
(Without vacuum)

ENVIRONMENTAL PROTECTION AGENCY			
STEEL INDUSTRY STUDY VACUUM DEGASSING PROCESS FLOW DIAGRAMS			
Dwn. 9/8/79			FIGURE III-2

VACUUM DEGASSING SUBCATEGORY

SECTION IV

SUBCATEGORIZATION

Introduction

The Agency considered several factors in evaluating whether vacuum degassing is an appropriate subcategory and whether it should be further subdivided. The factors considered were: manufacturing process and equipment; final product; raw materials; wastewater characteristics; wastewater treatability; size; age; geographic location; and, process water usage. The Agency found that none of these factors have a significant effect upon further subdivision of this subcategory. The following discussion addresses each of these factors.

Factors Considered in Subcategorization

Manufacturing Process and Equipment

The vacuum degassing operation is a unique process used to refine molten steel to meet metallurgical requirements not attainable in the steelmaking process. Its particular process characteristics distinguish it from other steelmaking operations in that it is an operation performed on the molten steel and is an intermediate step between the tapping of the molten steels from basic oxygen, open hearth or electric furnaces, and the casting in ingot molds or continuous casting machines. Even though there are seven different types of vacuum degassing systems, the Agency concluded that further subdivision based on the type of degassing process used is not appropriate as the various methods have similar process characteristics. Wastewaters result only when steam jet ejectors are used to develop a vacuum.

Final Products

The vacuum degassing process produces a steel in molten form ready for casting into steel ingots or into billets and blooms in a casting machine. The quantity and quality of the wastewaters generated is thus unrelated to the size, shape or form of the final product. As a result, the Agency concluded that further subdivision on the basis of final product is not appropriate.

Raw Materials

While raw materials are significant factors in defining the cokemaking, ironmaking, and steelmaking subcategories, the basic raw material (molten steel) is the same for vacuum degassing operations.

Many different steel compositions can be produced, but alloying is generally accomplished in the steel ladle after the degassing cycle.

The DCP survey of all vacuum degassing plants indicates that only seven of the thirty-five sites in the United States can be classified as carbon steel producers. The Agency's examination of wastewater flows (refer to the Summary Tables in Section III) and the analytical data (Tables VII-2 and VII-3) for carbon and specialty steel plants indicates no significant variations in wastewater generation. Accordingly, the Agency has concluded that raw materials do not significantly affect wastewater quality or quantity and thus further subdivision of the subcategory is not appropriate.

Wastewater Characteristics

All steam ejector vacuum degassing operations are generally similar with the only difference being the size of the vacuum equipment required. Equipment size in turn is dependent upon the size of the vacuum chambers and the time required to deliver the necessary vacuum. Although vacuum degassing wastewaters are distinguishable from some of the other steel industry subcategories, a review of the sampling data indicates no discernible pattern or apparent division among the various vacuum degassing plants. Vacuum degassing wastewater pollutants result from the gases and dusts generated in degassing molten steel. Thus, the process wastewater characteristics of the various vacuum degassing processes are similar. Concentration and pollutant variations are generally unrelated to the type of degassing method used or type of steel degassed.

Wastewater Treatability

Since vacuum degassing process wastewaters are basically similar, there are no significant differences in wastewater treatability within this subcategory. Therefore, the Agency concluded that no further subdivision based on wastewater treatability is appropriate.

Size and Age

The Agency considered whether the size and age of vacuum degassing operations are appropriate factors for subdivision. The Agency analyzed possible correlations relating the effects of age and size upon such elements as wastewater flow, wastewater characteristics, and the ability to retrofit treatment equipment to existing facilities. The Agency found no relationships between size and age.

Also, the analysis failed to reveal any correlation between the size of a degassing operation and process water usage or wastewater characteristics. Figure IV-1 is a plot of plant effluent flow (gallon/ton) versus plant size (tons/day) for the vacuum degassing subcategory. Also shown are model size and effluent flow. The size of the degassing plant has no significant effect upon the ability to recycle and subsequently attain a low effluent flow rate. A review of analytical data for the sampled plants (presented in Section VII) also

shows no relationship between size and the characteristics of the wastewater generated. Thus, the Agency concludes that further subdivision of the subcategory based upon the size of the degassing plant is not appropriate.

The Agency also examined age as a possible basis for subdivision. Since vacuum degassing is a relatively new development there is not a great difference in the ages of degassing operations. According to the DCP response data, the oldest vacuum degassing plant now in operation was installed in 1956 while most were built in the 1960's. Hence, there is not much variation in the age of degassing plants. The Agency compared effluent flow and age in a manner similar to that for size. Based upon Figure IV-2 the Agency did not find any relationship between plant age and flow. Thus, the Agency concluded that the age of a plant has no significant effect upon wastewater generation rates and the ability to recycle process wastewaters to attain a small effluent flow.

Further analysis indicated that the age of a degassing plant does not affect the quality or quantity of wastewaters generated. Among the different vacuum degassing systems, older degassers were found to generate the same kinds and amounts of wastewaters as newer ones. Also, the treatability of these wastewaters is similar in all cases.

The problem of retrofitting pollution control equipment was also addressed as part of the plant age analysis. As shown in Table IV-1, two older plants have demonstrated the ability to retrofit equipment. These examples serve to illustrate that pollution control equipment can be installed on older plants. In addition, the cost of retrofit was analyzed to determine whether older plants required additional capital expenditures for the installation of new pollution control equipment over that which is required for new plants. The D-DCPs solicited specific retrofit cost information, and of the six plants surveyed, only one responded that additional costs were incurred. The exact nature of these costs were not detailed nor could they be broken out as to vacuum degassing operations alone. The great majority of plants surveyed indicated that no retrofit costs were incurred. Hence, the Agency concludes that for the subcategory in general, there is no significant difference in wastewater treatment costs for older and newer plants.

Based upon the above, the Agency finds that both old and newer production facilities generate similar raw wastewater pollutant loadings; that pollution control facilities can be and have been retrofitted to both old and newer production facilities without substantial retrofit costs; that these pollution control facilities can and are achieving the same effluent quality; and, that further subcategorization or further segmentation within this subcategory on the basis of age or size is not appropriate.

Geographic Location

The location of vacuum degassing facilities (presented in Table IV-2) has no apparent effect for purposes of subdivision. The Agency analyzed the relationship between plant location, and process water use and wastewater characteristics. No discernible pattern was revealed. Although a small amount of water will be consumed as a result of using cooling towers, this impact was determined to be minimal. As a result, water consumption is not a significant factor with respect to subdividing this subcategory. Refer to Section VIII for additional information regarding the consumptive use of water.

Process Water Use

Process water use was examined as a possible factor for subdivision. However, based upon technical considerations, no further subdivision is necessary. The data were compiled according to the type of degassing operation and the type of steel processed. Although the data indicate that some minor differences in water use may exist, the Agency determined that with proper treatment, including recycle, all plants can achieve similar wastewater discharge rates.

TABLE IV-1

EXAMPLES OF PLANTS THAT HAVE DEMONSTRATED
THE ABILITY TO RETROFIT POLLUTION CONTROL EQUIPMENT
VACUUM DEGASSING CATEGORY

Plant Code	Plant Age (Year)	Treatment Age (Year)
0088A	1963	1971
0496	1965	1971

TABLE IV-2

GEOGRAPHIC LOCATION OF VACUUM DEGASSING OPERATIONS

State	No. of Plants	% of Total
Pennsylvania	16	45.7
Ohio	5	14.3
Texas	4	11.4
Illinois	3	8.6
California	2	5.7
New York	2	5.7
Kentucky	1	2.9
Rhode Island	1	2.9
West Virginia	1	2.9
	35	100

No. of States = 9

FIGURE IV-1

EFFLUENT FLOW vs PLANT SIZE (PRODUCTION CAPACITY)
VACUUM DEGASSING SUBCATEGORY

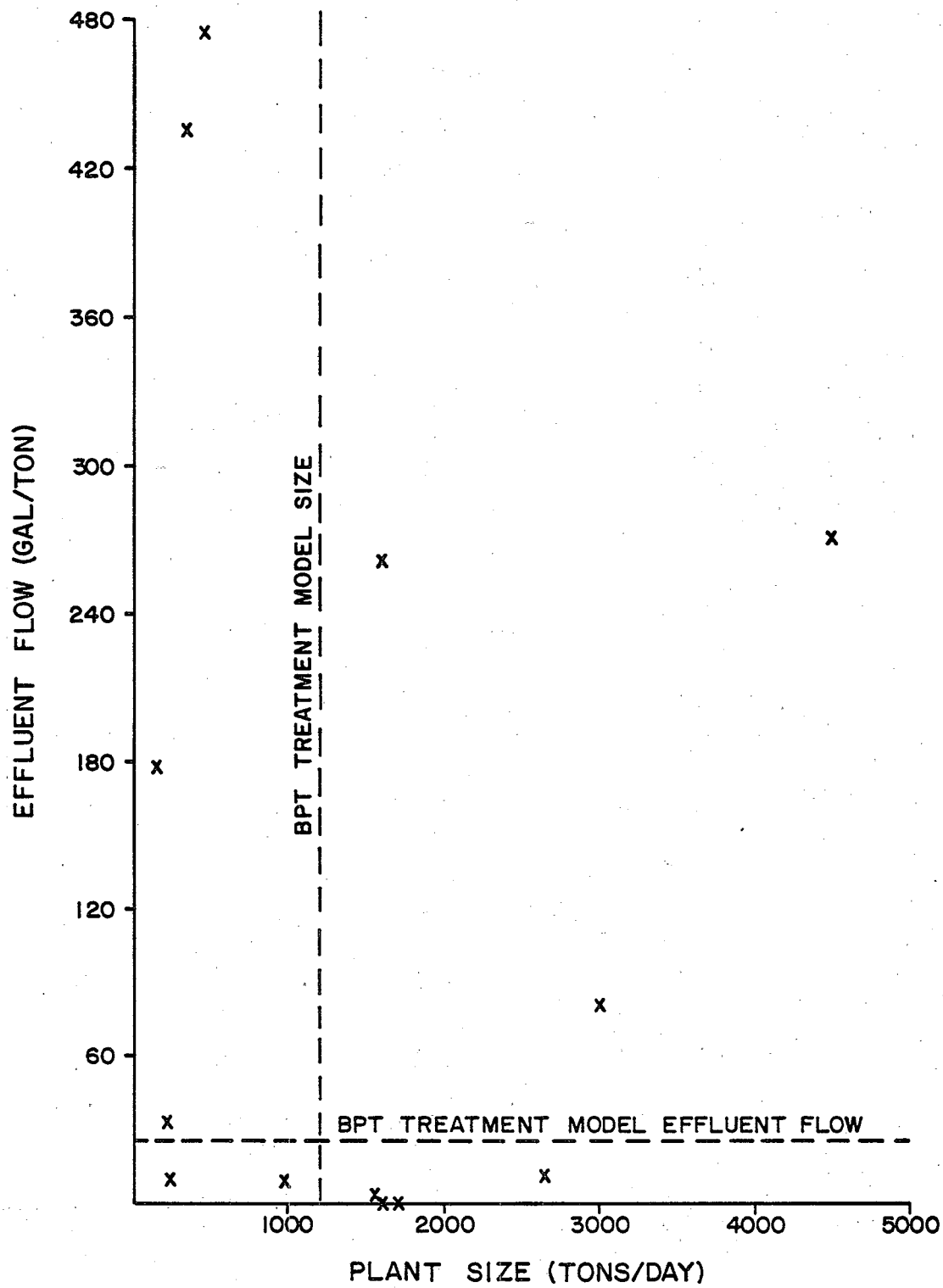

FIGURE IV-2

EFFLUENT FLOW vs PLANT AGE

VACUUM DEGASSING SUBCATEGORY

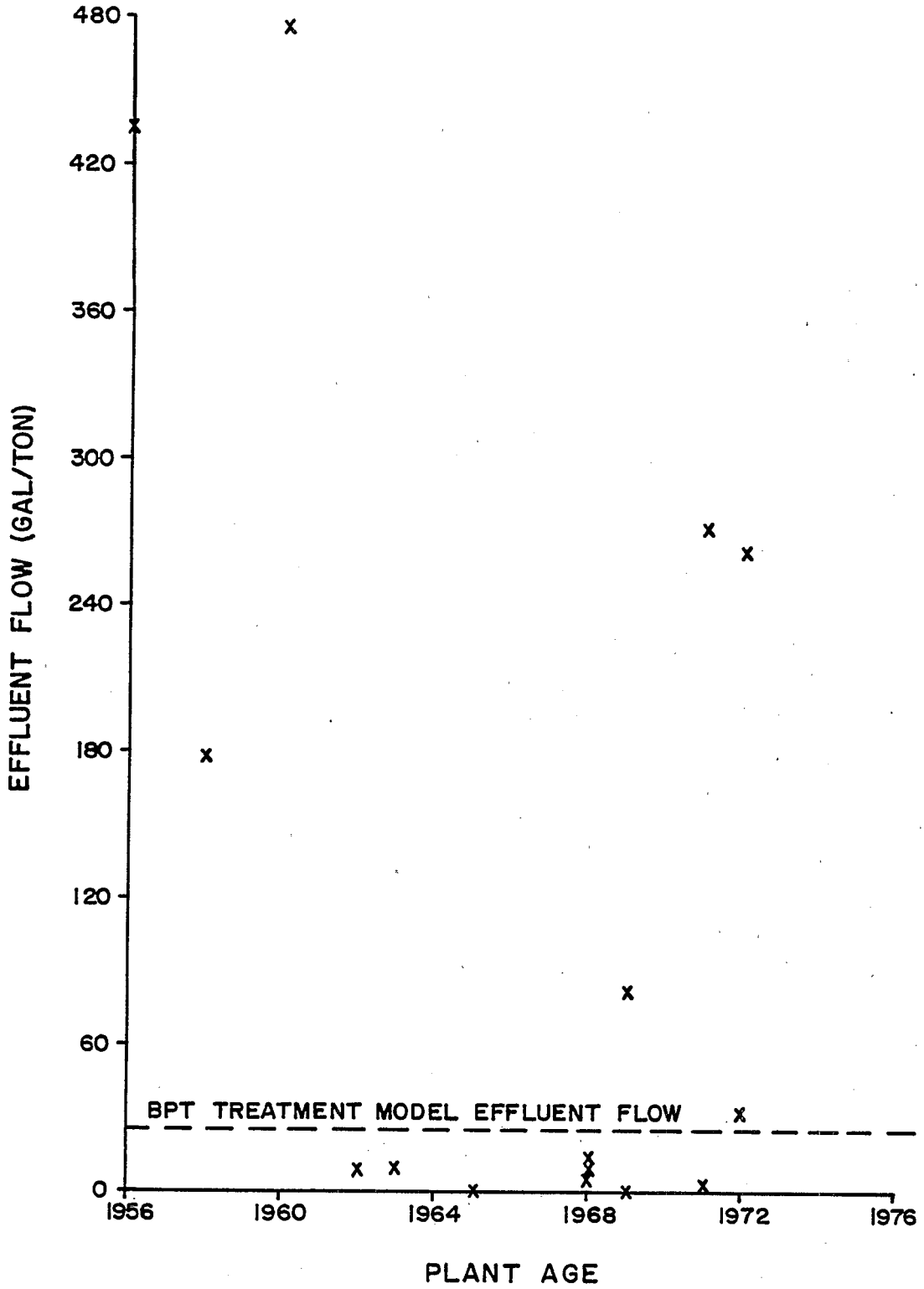

VACUUM DEGASSING SUBCATEGORY

SECTION V

WATER USE AND WASTEWATER CHARACTERIZATION

Introduction

This section describes the type of wastewaters originating from the process and the wastewater treatment systems presently in use. The description of the water systems is limited to those water systems which come into contact with pollutants generated by the process and exclude noncontact cooling water systems. Wastewater characterization is based upon analytical data obtained during field sampling surveys.

Water Use

During the vacuum degassing process, fumes and waste gases are generated as a result of the volatilization of impurities in the steel. The hydrogen and nitrogen gases dissolved in the steel are drawn out by the reduced pressures within the vacuum chamber. The oxygen reacts with carbon in the steel and is also drawn out as a gas, again, in response to the reduced pressures of the system. Wastewaters are generated in the vacuum degassing process when steam jet ejector exhaust steam is delivered to condensers where cooling waters condense the steam. The cooling waters, now contaminated with pollutants carried by the system exhaust, are then discharged into a sump (hot well) through a barometric leg (stand-pipe).

Vacuum degassing systems typically contain the following water systems:

1. Barometric condenser cooling waters
2. Flanges and other miscellaneous equipment noncontact cooling waters.

Only the barometric condenser cooling water system is addressed in this section, as the other water system includes only noncontact cooling waters.

The size of the vacuum equipment required for degassing operations is determined by the vacuum chamber size and the time needed to generate the required vacuum. Typical specifications for the vacuum equipment required to degas a 110 ton heat of steel are as follows: (1) degassing time is generally 20 minutes and the time required to pump down to vacuum is 30 seconds to 1 minute; (2) a steam ejector system supplied with two barometric condensers, rated at 850 lbs/hr of air equivalent at 70°F and a pressure of 4mm Hg; (3) steam is delivered to the system at 120 psig at a rate of 25,400 lbs/hr; (4) thirty four hundred gallons per minute of cooling water, at a maximum temperature of 105°F, is required to condense the steam at the intercondenser;

and, (5) the vacuum degassing unit only operates for a period of approximately 20 minutes per heat cycle.

Degassing is performed when required by metallurgical specifications. As the steam and water supply only operate during the degassing cycle and the number of heats per day varies, applied and discharge flow rates for the degassing subcategory are based upon gallons per ton per heat. These values were obtained by dividing the total flow during the degassing cycle by the tons of steel degassed.

Cooling towers are required on recycle water systems to reduce the temperature of the water returned for cooling. As noted above, a maximum temperature of 105°F is a typical limit for intercondenser cooling waters.

Table V-1 presents the available recycle rate data reported in the DCPs for degassing plants. Most degassing operation wastewater treatment systems have recycle systems which include cooling towers. A few have large lagoons for cooling, while some use a combination of both lagoons and cooling towers. As noted on this table, industry responses to the DCPs demonstrate very high recycle rates. In a few instances, recycle rates of up to 100% are reported. With one exception, reported recycle rates equal or exceed 97%, averaging 98.8%.

Wastewater Characterization

Vacuum degassing process wastewaters contain suspended solids, chromium, copper, lead, nickel, and zinc. The gases emitted from the molten steel come into contact with barometric condenser cooling water during degassing and, as a result, these pollutants are transferred to the water. The removal of the toxic metals from the steel is related to the relative vapor pressures of the various steel bath constituents.

The concentrations presented in Tables V-2 and V-3 provide a measure of the pollutant loads contributed by the process, thereby, indicating which pollutants are significant with respect to vacuum degassing operations. These concentrations were calculated by subtracting out all "background" pollutant concentrations. The pollutants that are shown (other than the pollutants previously limited) were selected on the basis of their presence in the raw wastewaters at concentrations of 0.010 mg/l or greater.

Table V-2 lists the concentrations of pollutants contributed by the process for plants sampled during the original guidelines survey. Table V-3 lists the concentrations of pollutants contributed by the process for the plants sampled during the toxic pollutant survey. Concentrations for Plant 065 could not be calculated because of insufficient water quality and flow data for the "background" waters.

The Agency used these concentration data to determine the pollutant loads contributed by the process. However, after reviewing the net

and gross concentration values of those pollutants considered for limitation, it was determined that the effect of makeup waters on these streams is insignificant. Accordingly, the Agency has concluded that it is appropriate to promulgate effluent limitations based upon gross concentration values. Additional information on the effect of make-up water quality is presented in Table VII-6.

TABLE V-1

RECYCLE RATES
VACUUM DEGASSING SUBCATEGORY

Plant Reference Code	% Recycle
0020B	100
0060	0
0060D	81
0088A	98.6
0248B	100
0496	100
0576A	0
0584F	98
0684E	98
0684E	99.6
0804A	0
0804B	97
0856F	0
0856R	0
0868B	98.8

TABLE V-2

SUMMARY OF ANALYTICAL DATA FROM SAMPLED PLANTS
ORIGINAL GUIDELINES SURVEY
VACUUM DEGASSING

Pickup per Pass Concentrations (mg/l) of Pollutants in Raw Wastewaters

Reference Code		0868B	0020B	0856R	
Plant Code		AD	E	G	
Sample Points		(#6-#9)	#16	(#2-#3)	Average
Flow (Gal/Ton)		195	953	436	528
	pH	6.6-7.4	6.5	6.3-6.5	6.3-7.4
	Manganese	9.1	35	0.00	14.7
	Suspended Solids	37	206	-	81
120	Copper	0.34	0.08	0.00	0.14
122	Lead	0.14	0.00	0.00	0.047
128	Zinc	5.8	0.37	-	2.1

-: Calculation results in a negative value. Negative values were considered as zeroes in the determination of the averages.

TABLE V-3

SUMMARY OF ANALYTICAL DATA FROM SAMPLED PLANTS
TOXIC POLLUTANT SURVEY
VACUUM DEGASSING

Pickup per Pass Concentrations (mg/1) of Pollutants in Raw Wastewaters

Reference Code		0496	0584F	0684F	
Plant Code		062	065	068	
Sample Points		(C-B)		(F-E)	Average
Flow (Gal/Ton)		146	234	682	354
	pH (Units)	7.8-9.1	+	8.0-8.2	7.8-9.1
	Manganese	-	+	3.9	2.0
	Suspended Solids	13	+	42	27.5
66	Bis(2-ethylhexyl) phthalate	-	+	-	-
67	Butylbenzyl phthalate	0.053	+	-	0.027
68	Di-n-butyl phthalate	0.040	+	-	0.020
84	Pyrene	ND	+	0.017	0.009
118	Cadmium	0.001	+	0.011	0.006
119	Chromium	0.094	+	0.035	0.065
120	Copper -	-	+	0.024	0.012
122	Lead	0.37	+	0.32	0.35
124	Nickel	-	+	0.014	0.007
126	Silver	-	+	0.003	0.002
127	Thallium	0	+	NA	0
128	Zinc	1.98	+	0.23	1.11

NA: No analysis performed
- : Calculation results in a negative value. Negative values were considered as zeroes in the determination of the averages.
+ : Calculation cannot be evaluated.

VACUUM DEGASSING SUBCATEGORY

SECTION VI

WASTEWATER POLLUTANTS

Introduction

This section discusses the Agency's selection of pollutants considered for limitation, the rationale for selecting these pollutants, and the process sources of these pollutants. The initial step in the selection process involved the development of a list of pollutants which the Agency considered to be representative of the vacuum degassing process based upon data gathered during the original guidelines survey and from the DCP responses. The Agency then supplemented that list based upon analytical data gathered during the toxic pollutant survey. In selecting the pollutants for which limitations have been promulgated, the Agency reviewed all analytical data, considered the impact of each pollutant and assessed its ability to serve as an "indicator" for other pollutants found in the wastewaters.

Conventional Pollutants

Suspended solids and pH were limited in the 1974 BPT regulation. The Agency selected suspended solids because the particulates generated by the process subsequently contaminate the process wastewaters. The particulates in the process gases subsequently come into contact with intercondenser cooling waters, thus resulting in the transfer of the particulates to the cooling waters. In addition, suspended solids provides an indication of the degree of process wastewater contamination and of the extent of wastewater treatment. Removal of suspended solids will also result in the removal of certain toxic pollutants (e.g., toxic metals).

Finally, the Agency selected pH, a measure of the acidity or alkalinity of a wastewater, because of the environmentally detrimental effects which can result from extremes in pH. In addition, extremes in pH can cause problems, such as corrosion and scaling, with process and wastewater treatment equipment and facilities. The Agency found the pH of vacuum degassing process wastewaters to be typically in the range of 6.0 to 9.0 standard units.

Toxic Pollutants

The Agency has also promulgated limitations for toxic pollutants. Initially, the Agency reviewed all pollutants which it believed were in vacuum degassing wastewaters based upon industry responses to the DCPs, analyses performed during the screening phase of the project, and its knowledge of the characteristics of vacuum degassing wastewaters. Table VI-1 presents a list of these pollutants.

After completing the analytical efforts for vacuum degassing operations, the Agency tabulated the data and calculated a net concentration value for each pollutant detected in the raw wastewaters at a concentration of 0.010 mg/l or greater. The Agency excluded from further consideration for limitation those pollutants which were not found at an average net raw concentration of 0.010 mg/l or greater. The list of these pollutants, including the conventional pollutants, is presented in Table VI-2.

The toxic metal pollutants are found in the process wastewaters as a result of the removal of these metals from the molten steel during the degassing process. These metals are carried away in the off-gases and are subsequently transferred to the intercondenser cooling waters.

The list of selected pollutants, Table VI-2, does not include any toxic organic pollutants although several were found at low levels as noted above. The Agency has not promulgated limitations for phthalates because it believes that the appearance of phthalates during the sampling process resulted from sampling and laboratory procedures. The Agency has not promulgated limitations for the remaining toxic organic pollutant (pyrene) because treatment for this pollutant, at the levels at which it was found, is not generally feasible. In addition, the Agency believes that these pollutants (phthalates and pyrene) do not tend to concentrate in recycle systems. Therefore, the discharge loadings of these pollutants will be reduced proportionately to the degree of recycle. The effluent limitations (refer to Sections IX and X) and standards (refer to Sections XII and XIII) include the pollutant load reductions attainable by the use of recycle systems.

Other pollutants (e.g., chloride, sulfate) are present at substantial levels in the process wastewaters, but are not included in the list of selected pollutants since they are generally nontoxic and difficult to remove. Treatment of these pollutants is not commonly practiced in wastewater treatment operations in any industry.

TABLE VI-1

TOXIC POLLUTANTS KNOWN TO BE PRESENT
VACUUM DEGASSING OPERATIONS

4. Benzene
6. Carbon Tetrachloride
23. Chloroform
65. Phenol
66. Bis(2-ethylhexyl) phthalate
67. Butyl benzyl phthalate
68. Di-n-butyl phthalate
84. Pyrene
85. Tetrachloroethylene
86. Toluene
114. Antimony
115. Arsenic
118. Cadmium
119. Chromium
120. Copper
122. Lead
124. Nickel
125. Selenium
126. Silver
127. Thallium
128. Zinc

TABLE VI-2

SELECTED POLLUTANTS
VACUUM DEGASSING SUBCATEGORY

	pH
	Suspended Solids
119	Chromium
120	Copper
122	Lead
124	Nickel
128	Zinc

VACUUM DEGASSING SUBCATEGORY

SECTION VII

CONTROL AND TREATMENT TECHNOLOGY

Introduction

A review of the control and treatment technologies currently in use or available for use in the vacuum degassing subcategory provided the basis for selecting and developing the BPT, BAT, NSPS, PSNS, and PSES model treatment systems. For this purpose, questionnaire and plant visit data were summarized to identify those treatment components and systems in use. Capabilities either demonstrated in this or in other steel industry operations (refer to Volume I) were used in evaluating the various treatment technologies. This section presents a summary of the treatment practices currently in use or available for use in the treatment of vacuum degassing operation wastewaters.

This section also presents the raw wastewater and treated effluent data for the plants sampled and the effluent analytical data provided in the D-DCPs. Also included are descriptions of the treatment systems at each sampled plant and a review of the impact of intake water quality on raw waste loadings.

Summary of Treatment Practices Currently Employed

A survey of treatment components used in the vacuum degassing subcategory indicates that all plants, for which DCP response treatment system information is available, include gravity sedimentation (as a primary step in many instances). High rate recycle is also practiced at many plants, typically with a cooling tower, lagoon, or cooling tower and lagoon combination. The process wastewaters are often treated in central (i.e., multi-waste source or multi-operational waste source) treatment facilities which provide additional treatment using either filters or clarifiers in conjunction with lime or polymer flocculation.

Referring to Table III-2, the Agency has found that the following treatment technologies are in use at most plants for which treatment system information was provided in the DCP responses.

A. Scale pit, hot well or similar sedimentation device-

   Intended to provide primary sedimentation of the raw process wastewaters.

B. Cooling towers-

   Permit the recycle of process wastewaters by reducing the wastewater heat load.

C. Recycle-

Nearly all (>98%) of the cooling tower effluent is returned to the process at those plants practicing recycle.

The Agency has included the above components in the BPT model treatment system based upon their widespread use in the treatment of vacuum degassing process wastewaters.

Control and Treatment
Technologies for BAT, NSPS, PSES, and PSNS

Because of the presence of toxic inorganic pollutants in vacuum degassing wastewaters, the Agency considered advanced treatment systems to serve as model technologies for BAT, NSPS, PSES, and PSNS. A brief discussion of each of the technologies considered by the Agency is presented below.

Filtration technology is a common and effective means of removing suspended solids, and those pollutants (particularly the toxic metals) entrained in these solids. Two of the vacuum degassing plants for which treatment system data were provided have filters. Generally, the filter bed is comprised of one or more filter media (such as sand, anthracite, and garnet) although a variety of filtration systems are available (flat bed, deep bed, cloth belt, pressure, or gravity). Filtration is included as a model treatment technology for vacuum degassing operations primarily to remove any particulate toxic metals.

The Agency also considered both lime and sulfide precipitation for removal of toxic metals. Lime precipitation is well demonstrated throughout the steel industry for treatment of toxic metals. As noted in other subcategory reports, sulfide precipitation is not demonstrated in the steel industry.

The Agency considered vapor compression distillation as a possible means of attaining zero discharge of wastewaters in the vacuum degassing subcategory. The resulting slurry would be dried by various means, while the distillate would be recycled to the process. This technology would consume in excess of 50 times more energy than the other BAT alternatives considered.

Summary of Analytical Data

Raw wastewater and effluent analytical data for the vacuum degassing operations visited during the original and toxic pollutant surveys are presented in Tables VII-2 and VII-3. Plant AC, which was sampled during the original survey, was resampled as Plant 065 during the toxic pollutant survey. Table VII-1 provides a legend for the various control and treatment technology abbreviations used in the above tables and in other tables throughout this report.

The concentrations presented in the above mentioned tables represent, except where footnoted, averages of measured values. In some cases,

these data are for central treatment systems. The effluent waste loads (lb/1000 lb) for central treatment systems represent apportioned loads. In these central treatment systems the percentage contribution of an individual operation to the total treatment system influent load was determined and subsequently applied to the total effluent load. By using this procedure, the Agency assessed the effects of treatment on the waste loads of an individual process which discharges to a central treatment facility.

As a supplement to the sampled plant analytical data, effluent data from plant D-DCP responses are presented in Table VII- 4. Table VII-5 summarizes the typical vacuum degassing process wastewater characteristics determined from the sampled plant analytical data.

Plant Visits

Treatment facilities for the visited plants are described below. Reference is made to the respective treatment flow schematics which are presented at the end of this section.

Plant AD (0868B) - Figure VII-1

Vacuum degassing wastewaters are treated with continuous casting wastewaters in a central treatment system. The treatment system consists of a scale pit, high flow pressure filters, a cooling tower, and a recycle system. The blowdown from this system is approximately 1%.

Plant 062 (0496) - Figure VII-2

This plant uses a combined treatment system for its vacuum degassing and continuous casting wastewaters. Vacuum degassing wastewaters are discharged to a hot well from which a sidestream is treated through a cloth belt filter. The filter effluent and the remaining degassing wastewaters are then discharged to a main hot well. From this hot well, the combined degassing and casting wastewaters are treated through a scale pit, sand filters and cooling tower. A recycle is taken from the cooling tower back to the vacuum degassing operation. All of the remaining wastewaters are recirculated through a twenty million gallon reservoir. Zero discharge has been reported for this system.

Plant 065 (0584F) - Figure VII-3

Vacuum degassing wastewaters are discharged to a hot well and recirculated through a cooling tower back to the process.

Plant E (0020B) - Figure VII-4

The treatment system for this plant is identical to the system for Plant 065. Degassing wastewaters are completely recirculated from a hot well, through a cooling tower, and back to the process.

Plant G (0856R) - Figure VII-5

Degassing wastewaters empty into a hot well and are then discharged to a receiving stream. This system operates on a once-through basis.

Plant 068 (0684H) - Figure VII-6

Vacuum degassing wastewaters discharge to a hot well and are then treated in a central treatment facility. The central treatment facilities include deep bed filters and clarifiers. The central treatment effluent is recycled to the vacuum degassing operation and to other plant operations.

Effect of Make-up Water Quality

Where the mass loading of a limited pollutant in the make-up water to a process is small in relation to the raw waste loading of that pollutant, the impact of make-up water quality on wastewater treatment system performance is not significant, and, in many cases, is not measureable. In these instances, the Agency has determined that the respective effluent limitations and standards should be developed and applied on a gross basis.

As shown in Table VII-6, the make-up water quality for sampled vacuum degassing operations is not significant compared to the raw waste loadings of the limited pollutants. Thus, the Agency has determined that the limitations and standards for vacuum degassing operations should be applied on a gross basis, except to the extent provided by 40 CFR 122.63(h).

TABLE VII-1

OPERATING MODES, CONTROL AND TREATMENT TECHNOLOGIES AND DISPOSAL METHODS

Symbols

A. Operating Modes

1. OT — Once-Through

2. Rt,s,n — Recycle, where t = type waste
s = stream recycled
n = % recycled

t: U = Untreated
T = Treated

	s	n
P	Process Wastewater	% of raw waste flow
F	Flume Only	% of raw waste flow
S	Flume and Sprays	% of raw waste flow
FC	Final Cooler	% of FC flow
BC	Barometric Cond.	% of BC flow
VS	Abs. Vent Scrub.	% of VS flow
FH	Fume Hood Scrub.	% of FH flow

3. REt,n — Reuse, where t = type
n = % of raw waste flow

t: U = before treatment
T = after treatment

4. BDn — Blowdown, where n = discharge as % of raw waste flow

B. Control Technology

10. DI — Deionization

11. SR — Spray/Fog Rinse

12. CC — Countercurrent Rinse

13. DR — Drag-out Recovery

C. Disposal Methods

20. H — Haul Off-Site

21. DW — Deep Well Injection

TABLE VII-1
OPERATING MODES, CONTROL AND TREATMENT
TECHNOLOGIES AND DISPOSAL METHODS
PAGE 2

C. Disposal Methods (cont.)

22.	Qt,d	Coke Quenching, where t = type d = discharge as % of makeup t: DW = Dirty Water CW = Clean Water
23.	EME	Evaporation, Multiple Effect
24.	ES	Evaporation on Slag
25.	EVC	Evaporation, Vapor Compression Distillation

D. Treatment Technology

30.	SC	Segregated Collection
31.	E	Equalization/Blending
32.	Scr	Screening
33.	OB	Oil Collecting Baffle
34.	SS	Surface Skimming (oil, etc.)
35.	PSP	Primary Scale Pit
36.	SSP	Secondary Scale Pit
37.	EB	Emulsion Breaking
38.	A	Acidification
39.	AO	Air Oxidation
40.	GF	Gas Flotation
41.	M	Mixing
42.	Nt	Neutralization, where t = type t: L = Lime C = Caustic A = Acid W = Wastes O = Other, footnote

TABLE VII-1
OPERATING MODES, CONTROL AND TREATMENT
TECHNOLOGIES AND DISPOSAL METHODS
PAGE 3

D. Treatment Technology (cont.)

43. FLt — Flocculation, where t = type

t: L = Lime
A = Alum
P = Polymer
M = Magnetic
O = Other, footnote

44. CY — Cyclone/Centrifuge/Classifier

44a. DT — Drag Tank

45. CL — Clarifier

46. T — Thickener

47. TP — Tube/Plate Settler

48. SLn — Settling Lagoon, where n = days of retention time

49. BL — Bottom Liner

50. VF — Vacuum Filtration (of e.g., CL, T> or TP underflows)

51. Ft,m,h — Filtration, where t = type
m = media
h = head

t	m	h
D = Deep Bed	S = Sand	G = Gravity
F = Flat Bed	O = Other, footnote	P = Pressure

52. CLt — Chlorination, where t = type

t: A = Alkaline
B = Breakpoint

53. CO — Chemical Oxidation (other than CLA or CLB)

TABLE VII-1
OPERATING MODES, CONTROL AND TREATMENT
TECHNOLOGIES AND DISPOSAL METHODS
PAGE 4

D. Treatment Technology (cont.)

54. BOt — Biological Oxidation, where t = type

t: An = Activated Sludge
n = No. of Stages
T = Trickling Filter
B = Biodisc
O = Other, footnote

55. CR — Chemical Reduction (e.g., chromium)

56. DP — Dephenolizer

57. ASt — Ammonia Stripping, where t = type

t: F = Free
L = Lime
C = Caustic

58. APt — Ammonia Product, where t = type

t: S = Sulfate
N = Nitric Acid
A = Anhydrous
P = Phosphate
H = Hydroxide
O = Other, footnote

59. DSt — Desulfurization, where t = type

t: Q = Qualifying
N = Nonqualifying

60. CT — Cooling Tower

61. AR — Acid Regeneration

62. AU — Acid Recovery and Reuse

63. ACt — Activated Carbon, where t = type

t: P = Powdered
G = Granular

64. IX — Ion Exchange

65. RO — Reverse Osmosis

66. D — Distillation

TABLE VII-1
OPERATING MODES, CONTROL AND TREATMENT
TECHNOLOGIES AND DISPOSAL METHODS
PAGE 5

D. Treatment Technology (cont.)

67.	AA1	Activated Alumina
68.	OZ	Ozonation
69.	UV	Ultraviolet Radiation
70.	CNTt,n	Central Treatment, where t = type n = process flow as % of total flow t: 1 = Same Subcats. 2 = Similar Subcats. 3 = Synergistic Subcats. 4 = Cooling Water 5 = Incompatible Subcats.
71.	On	Other, where n = Footnote number
72.	SB	Settling Basin
73.	AE	Aeration
74.	PS	Precipitation with Sulfide

TABLE VII-2

SUMMARY OF ANALYTICAL DATA FROM SAMPLED PLANTS
ORIGINAL GUIDELINES SURVEY
VACUUM DEGASSING

Raw Wastewaters

Reference Code		0868B		0020B		0856R		
Plant Code		AD		E		G		
Sampling Point(s)		6		16		2		
Flow, (Gal/Ton)		195		953		436		Average 528
		mg/l	lbs/1000 lbs	mg/l	lbs/1000 lbs	mg/l	lbs/1000 lbs	mg/l	lbs/1000 lbs
	pH (Units)	6.6-7.4		6.5		6.3-6.5		6.3-7.4	
	Manganese	16	0.0130	35	0.139	0.01	0.000018	17.0	0.0507
	Suspended Solids	80	0.0651	206	0.819	14	0.0255	100	0.303
119	Chromium	NA	NA	0.00	0.00	0.00	0.000	0.0	0.000
120	Copper	0.80	0.000651	0.08	0.000318	0.00	0.000	0.29	0.000277
122	Lead	0.96	0.000781	0.00	0.000	0.00	0.000	0.32	0.000260
124	Nickel	NA	NA	0.45	0.00179	0.00	0.000	0.23	0.000895
128	Zinc	9.4	0.00764	0.37	0.00147	0.01	0.000018	3.26	0.00304

Treated Effluent

Reference Code		0868B		0020B		0856R	
Plant Code		AD		E		G	
Sampling Point(s)		9		16		2	
Flow (Gal/Ton)		2.3		0		436	
C&TT		PSP,FD(UNK)P,RTP98.8		CT,RUP100		OT	
		mg/l	lbs/1000 lbs	mg/l	lbs/1000 lbs	mg/l	lbs/1000 lbs
	pH (Units)	6.8-7.0		6.5		6.4	
	Manganese	3.4	0.000033	35	0	0.01	0.000018
	Suspended Solids	58	0.000556	206	0	14	0.0255
119	Chromium	NA	NA	0.00	0	0.00	0.000
120	Copper	0.27	0.000003	0.08	0	0.00	0.000
122	Lead	0.43	0.000004	0.00	0	0.00	0.000
124	Nickel	NA	NA	0.45	0	0.00	0.000
128	Zinc	1.4	0.000013	0.37	0	0.01	0.000018

NA : No analysis performed.

NOTE: For the definition of C&TT codes, see Table VII-1.

TABLE VII-3

SUMMARY OF ANALYTICAL DATA FROM SAMPLED PLANTS
TOXIC POLLUTANT SURVEY
VACUUM DEGASSING

Raw Wastewaters

Reference Code		0496		0584F		0684H		Average		Overall Average(1)
Plant Code		062		065		068				
Sampling Point(s)		C		H		F				
Flow, (Gal/Ton)		146		234		682		354		441
		mg/l	lbs/1000 lbs	mg/l	lbs/1000 lbs	mg/l	lbs/1000 lbs	mg/l	lbs/1000 lbs	mg/l	lbs/1000 lbs
	pH (Units)	7.8-9.1		4.5-5.7		8.0-8.2		4.5-9.1		4.5-9.1	
	Manganese	2.0	0.00122	7.3	0.00712	4.0	0.0114	4.4	0.00658	10.7	0.0286
	Suspended Solids	30	0.0183	29	0.0283	81	0.230	4.67	0.0922	73.3	0.198
119	Chromium	0.127	0.000077	3.0	0.00293	0.05	0.000142	1.06	0.00105	0.51	0.000630
120	Copper	0.090	0.000055	0.44	0.000432	0.047	0.000134	0.19	0.000207	0.24	0.000265
122	Lead	0.47	0.000286	3.2	0.00312	0.28	0.000796	1.32	0.00140	0.82	0.000831
124	Nickel	0.023	0.000014	0.00	0.000	0.037	0.000105	0.020	0.000040	0.10	0.000382
128	Zinc	2.5	0.00152	24	0.0234	0.53	0.00151	9.0	0.00881	6.1	0.00593

Treated Effluent

Reference Code		0496		0584F		0684H	
Plant Code		062		065		068	
Sampling Point(s)		E		H		F	
Flow, (Gal/Ton)		0		0		682	
C&TT		PSP CT,FDS(UNK),RET100		CT,RUP100		CT	
		mg/l	lbs/1000 lbs	mg/l	lbs/1000 lbs	mg/l	lbs/1000 lbs
	pH (Units)	7.6-8.1		4.5-5.7		8.0-8.2	
	Manganese	0.27	(2)	7.3	0	4.0	0.0114
	Suspended Solids	16	(2)	29	0	81	0.230
119	Chromium	0.026	(2)	3.0	0	0.05	0.000142
120	Copper	0.207	(2)	0.443	0	0.047	0.000134
122	Lead	0.060	(2)	3.2	0	0.28	0.000796
124	Nickel	0.007	(2)	0.00	0	0.037	0.000105
128	Zinc	0.333	(2)	24	0	0.53	0.00151

(1) Average of all values on Tables VII-2 and VII-3.
(2) No wastewaters are discharged to a receiving stream as all plant wastewaters are combined and recycled.

NOTE: For the definition of C&TT codes, see Table VII-1.

TABLE VII-4

SUMMARY OF D-DCP ANALYTICAL DATA
VACUUM DEGASSING

Plant Code:	Plant 0584F				Plant 0684E			
C&TT:	PSP,CT,RTP 98.2				CT,FLL,FLO,FLP,CL,RTP 99.6			
Parameter	No. of Analyses	Avg.	Max.	Std. Dev.	No. of Analyses	Avg.	Max.	Std. Dev.
pH (Units)	3	4.9	5.7	-	11	8.4	8.5	-
Suspended Solids	3	29	44	13	11	45	96	22.4
122 Lead	3	2.8	3.7	0.5	3	0.653	0.400	0.234
128 Zinc	3	24	28	5	3	1.39	1.84	0.51

Note: Concentrations are expressed in mg/l unless otherwise noted.

TABLE VII-5

RAW WASTEWATER CHARACTERIZATION
VACUUM DEGASSING

Pollutant Parameters		Raw Waste Concentration (mg/l)
	pH (Units)	6-9
	Suspended Solids	60
119	Chromium	0.5
120	Copper	0.3
122	Lead	1
124	Nickel	0.1
128	Zinc	6

TABLE VII-6

NET CONCENTRATION AND LOAD ANALYSIS
VACUUM DEGASSING OPERATIONS

Make-up Water → [Vacuum Degassing Process, Model Size: 1,200 TPD] → Raw Wastewater

25 GPT x 1,200 TPD = 30,000 GPD

1,400 GPT x 1,200 TPD = 1.68 MGD

Regulated Pollutants	Make-up Conc. (mg/1) Min.	Make-up Conc. (mg/1) Max.	Make-up Conc. (mg/1) Avg.	Make-up Avg. Load (lbs/day)	Raw Waste Avg. Conc. (mg/1)	Raw Waste Avg. Load (lbs/day)	Make-up as a % of Raw Waste Load
Total Suspended Solids	9	144	61	15.26	60	840.7	1.82
122 Lead	<0.020	0.080	0.021	0.005	1	14.01	0.036
128 Zinc	0.020	0.50	0.15	0.038	6	84.07	0.045

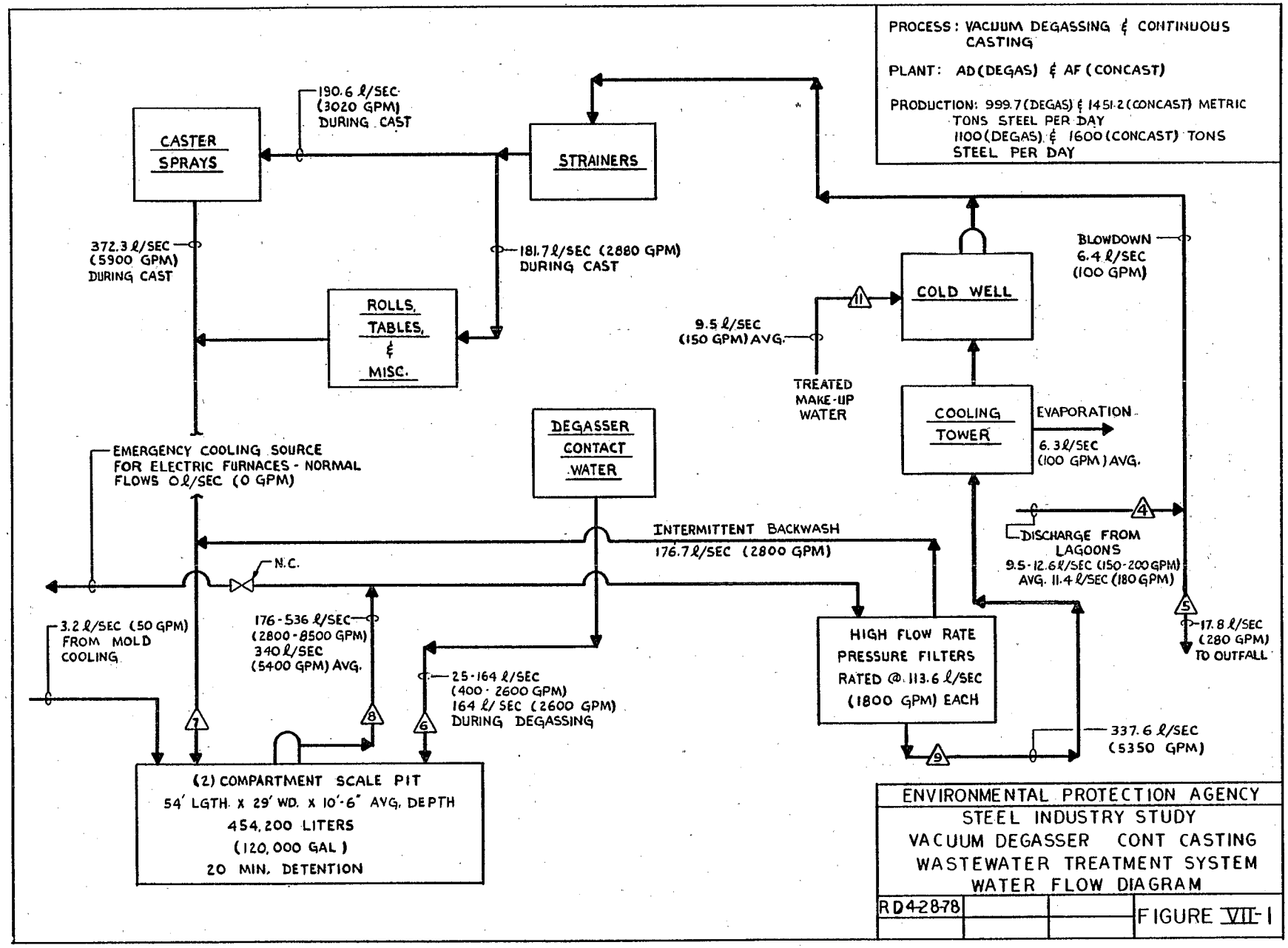
PROCESS: VACUUM DEGASSING & CONTINUOUS CASTING
PLANT: AD (DEGAS) & AF (CONCAST)
PRODUCTION: 999.7 (DEGAS) & 1451.2 (CONCAST) METRIC TONS STEEL PER DAY
1100 (DEGAS) & 1600 (CONCAST) TONS STEEL PER DAY
CASTER SPRAYS
190.6 ℓ/SEC (3020 GPM) DURING CAST
STRAINERS
372.3 ℓ/SEC (5900 GPM) DURING CAST
181.7 ℓ/SEC (2880 GPM) DURING CAST
ROLLS, TABLES, & MISC.
BLOWDOWN 6.4 ℓ/SEC (100 GPM)
COLD WELL
9.5 ℓ/SEC (150 GPM) AVG.
TREATED MAKE-UP WATER
COOLING TOWER
EVAPORATION
6.3 ℓ/SEC (100 GPM) AVG.
DEGASSER CONTACT WATER
EMERGENCY COOLING SOURCE FOR ELECTRIC FURNACES - NORMAL FLOWS 0 ℓ/SEC (0 GPM)
INTERMITTENT BACKWASH
176.7 ℓ/SEC (2800 GPM)
N.C.
DISCHARGE FROM LAGOONS
9.5-12.6 ℓ/SEC (150-200 GPM) AVG. 11.4 ℓ/SEC (180 GPM)
3.2 ℓ/SEC (50 GPM) FROM MOLD COOLING
176-536 ℓ/SEC (2800-8500 GPM) 340 ℓ/SEC (5400 GPM) AVG.
25-164 ℓ/SEC (400-2600 GPM) 164 ℓ/SEC (2600 GPM) DURING DEGASSING
HIGH FLOW RATE PRESSURE FILTERS RATED @ 113.6 ℓ/SEC (1800 GPM) EACH
17.8 ℓ/SEC (280 GPM) TO OUTFALL
337.6 ℓ/SEC (5350 GPM)
(2) COMPARTMENT SCALE PIT
54' LGTH. X 29' WD. X 10'-6" AVG. DEPTH
454,200 LITERS
(120,000 GAL)
20 MIN. DETENTION
ENVIRONMENTAL PROTECTION AGENCY
STEEL INDUSTRY STUDY
VACUUM DEGASSER CONT CASTING
WASTEWATER TREATMENT SYSTEM
WATER FLOW DIAGRAM
RD 4-28-78
FIGURE VII-1

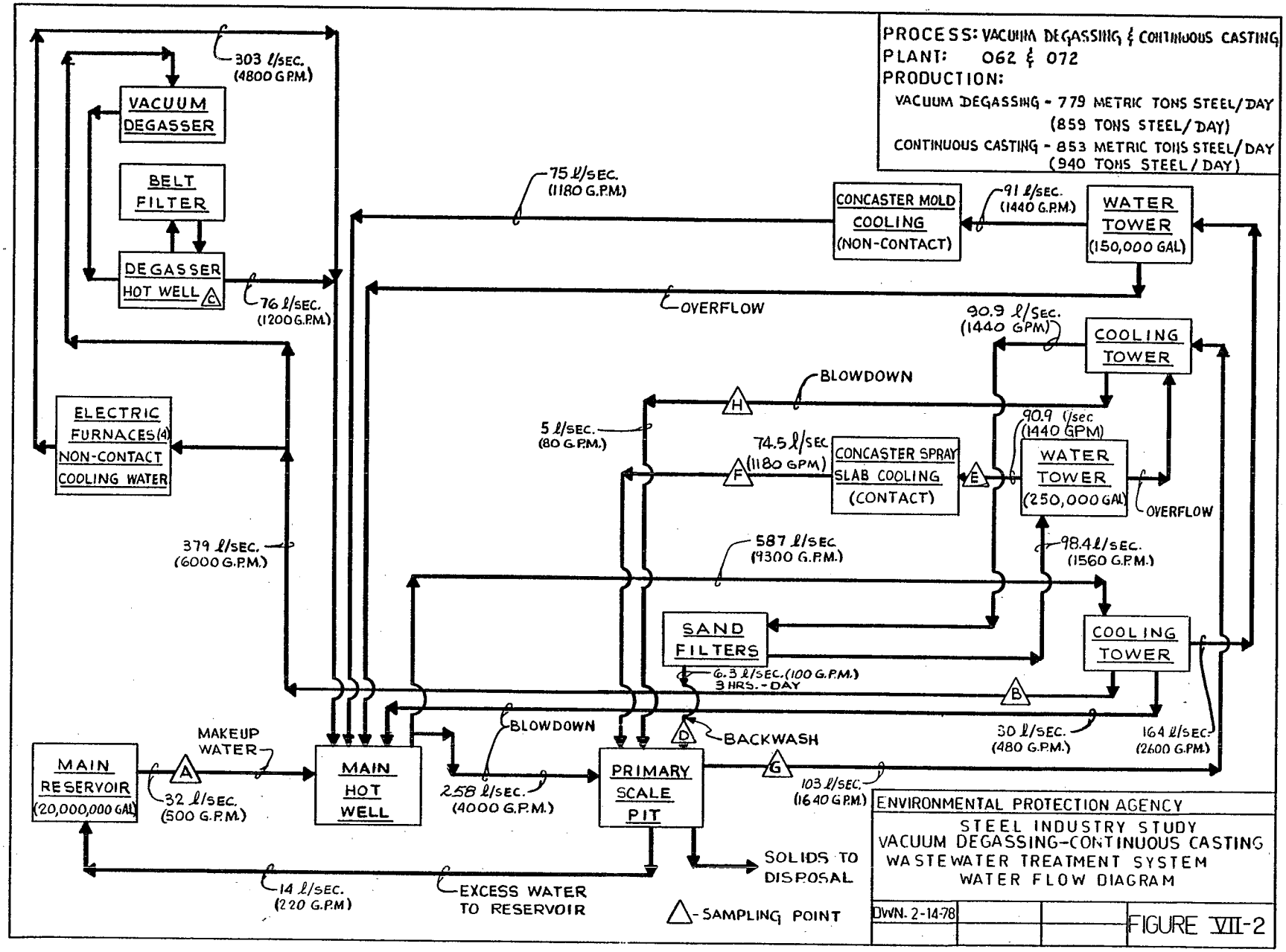
PROCESS: VACUUM DEGASSING & CONTINUOUS CASTING
PLANT: 062 & 072
PRODUCTION:
VACUUM DEGASSING - 779 METRIC TONS STEEL/DAY (859 TONS STEEL/DAY)
CONTINUOUS CASTING - 853 METRIC TONS STEEL/DAY (940 TONS STEEL/DAY)
303 ℓ/SEC. (4800 G.P.M.)
VACUUM DEGASSER
BELT FILTER
DEGASSER HOT WELL
C
76 ℓ/SEC. (1200 G.P.M.)
75 ℓ/SEC. (1180 G.P.M.)
CONCASTER MOLD COOLING (NON-CONTACT)
91 ℓ/SEC. (1440 G.P.M.)
WATER TOWER (150,000 GAL)
OVERFLOW
90.9 ℓ/SEC. (1440 GPM)
COOLING TOWER
BLOWDOWN
H
ELECTRIC FURNACES (4) NON-CONTACT COOLING WATER
5 ℓ/SEC. (80 G.P.M.)
74.5 ℓ/SEC (1180 GPM)
F
CONCASTER SPRAY SLAB COOLING (CONTACT)
E
90.9 ℓ/sec (1440 GPM)
WATER TOWER (250,000 GAL)
OVERFLOW
379 ℓ/SEC. (6000 G.P.M.)
587 ℓ/SEC (9300 G.P.M.)
98.4 ℓ/SEC. (1560 G.P.M.)
SAND FILTERS
COOLING TOWER
6.3 ℓ/SEC. (100 G.P.M.) 3 HRS. - DAY
B
30 ℓ/SEC. (480 G.P.M.)
164 ℓ/SEC. (2600 G.P.M.)
MAKEUP WATER
BLOWDOWN
D
BACKWASH
MAIN RESERVOIR (20,000,000 GAL)
A
32 ℓ/SEC. (500 G.P.M.)
MAIN HOT WELL
258 ℓ/SEC. (4000 G.P.M.)
PRIMARY SCALE PIT
G
103 ℓ/SEC. (1640 G.P.M.)
SOLIDS TO DISPOSAL
14 ℓ/SEC. (220 G.P.M.)
EXCESS WATER TO RESERVOIR
△ - SAMPLING POINT
ENVIRONMENTAL PROTECTION AGENCY
STEEL INDUSTRY STUDY
VACUUM DEGASSING-CONTINUOUS CASTING
WASTEWATER TREATMENT SYSTEM
WATER FLOW DIAGRAM
DWN. 2-14-78
FIGURE VII-2

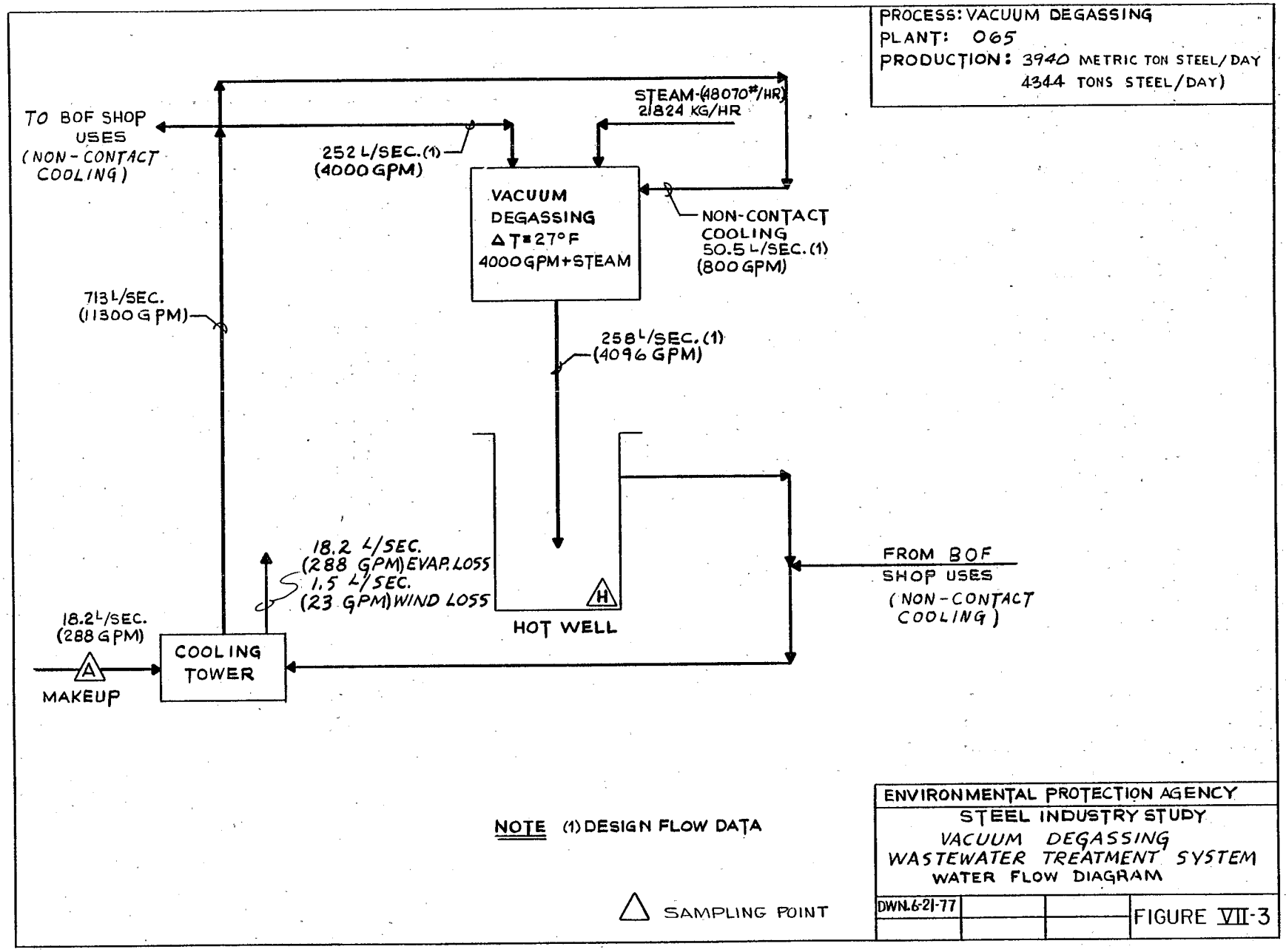
PROCESS: VACUUM DEGASSING
PLANT: 065
PRODUCTION: 3940 METRIC TON STEEL/DAY
4344 TONS STEEL/DAY)
TO BOF SHOP USES (NON-CONTACT COOLING)
252 L/SEC. (1) (4000 GPM)
STEAM-(48070#/HR) 21824 KG/HR
VACUUM DEGASSING ΔT=27°F 4000 GPM+STEAM
NON-CONTACT COOLING 50.5 L/SEC. (1) (800 GPM)
713 L/SEC. (11300 GPM)
258 L/SEC. (1) (4096 GPM)
18.2 L/SEC. (288 GPM) EVAP. LOSS
1.5 L/SEC. (23 GPM) WIND LOSS
H
HOT WELL
FROM BOF SHOP USES (NON-CONTACT COOLING)
18.2 L/SEC. (288 GPM)
A
MAKEUP
COOLING TOWER
NOTE (1) DESIGN FLOW DATA
SAMPLING POINT
ENVIRONMENTAL PROTECTION AGENCY
STEEL INDUSTRY STUDY
VACUUM DEGASSING
WASTEWATER TREATMENT SYSTEM
WATER FLOW DIAGRAM
DWN. 6-21-77
FIGURE VII-3

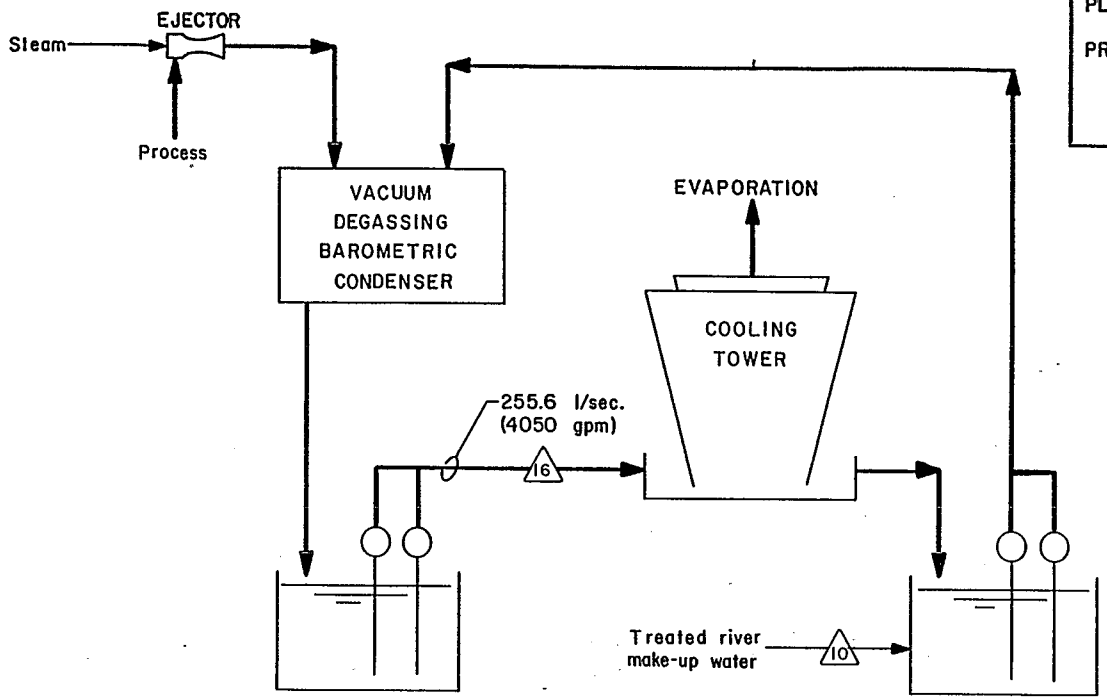

PROCESS: VACUUM DEGASSING

PLANT: E

PRODUCTION: 192.3 metric tons steel/day (212 tons steel/day)

△ Sampling point

ENVIRONMENTAL PROTECTION AGENCY

STEEL INDUSTRY STUDY
VACUUM DEGASSING
WASTEWATER TREATMENT SYSTEM
WATER FLOW DIAGRAM

Dwn. 2/15/79

FIGURE VII-4

PROCESS: Vacuum Degassing

PLANT: G

PRODUCTION: 349.2 metric tons steel/day
(385 tons steel/day)

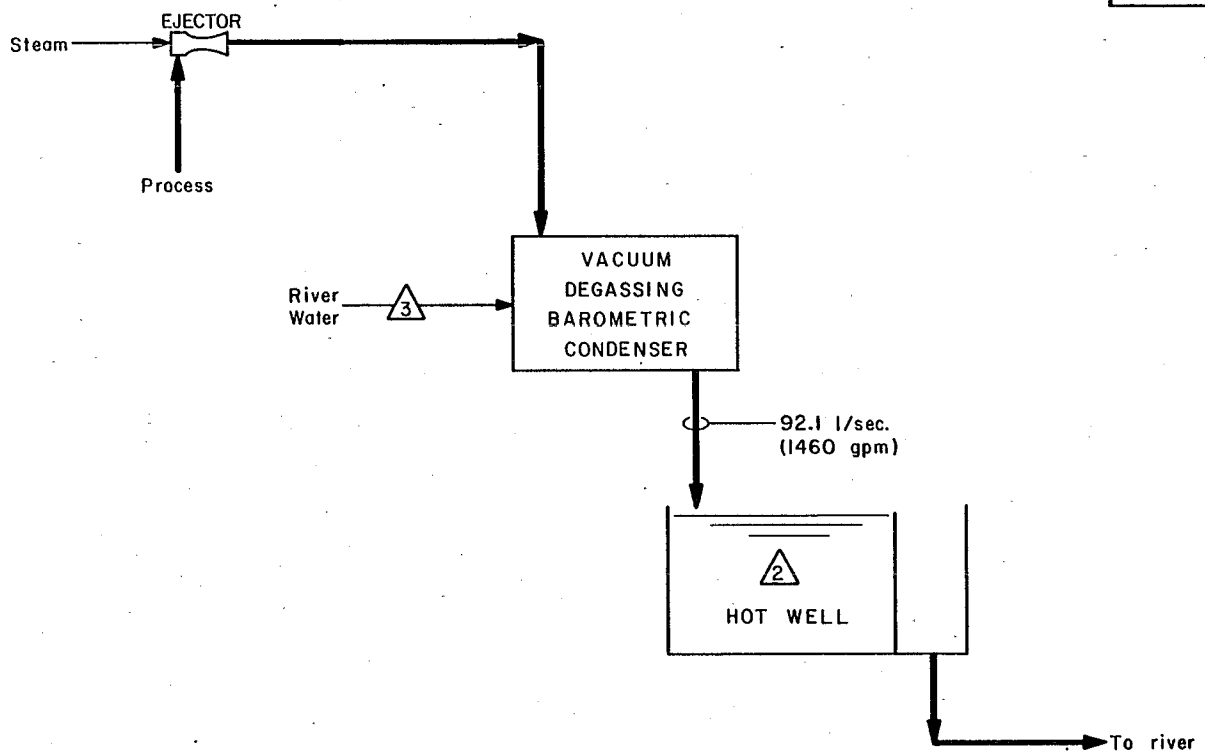

△ Sampling point

ENVIRONMENTAL PROTECTION AGENCY

STEEL INDUSTRY STUDY
VACUUM DEGASSING
WASTEWATER TREATMENT SYSTEM
WATER FLOW DIAGRAM

Dwn. 2/14/79

FIGURE VII-5

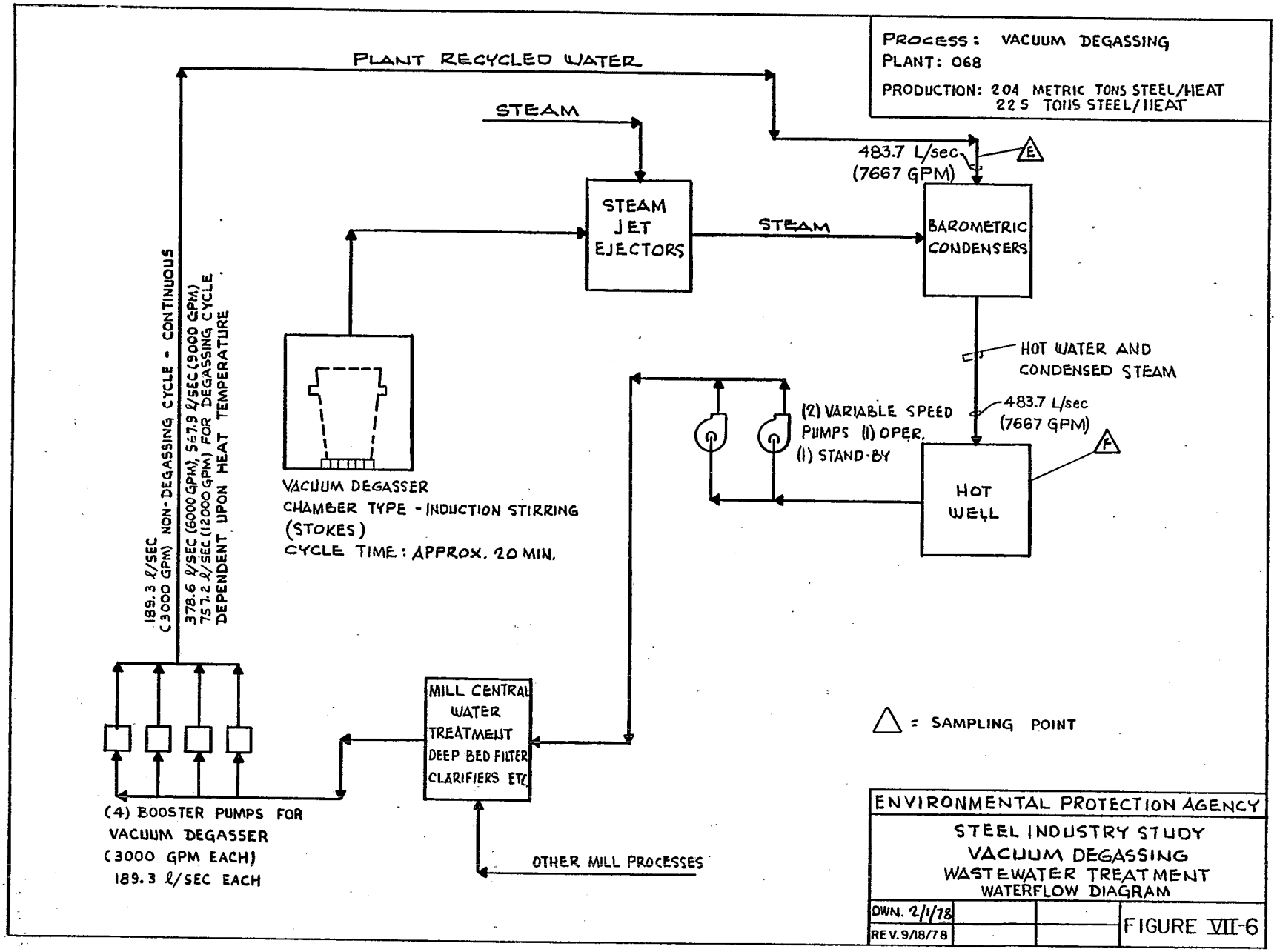
PROCESS: VACUUM DEGASSING
PLANT: 068
PRODUCTION: 204 METRIC TONS STEEL/HEAT
225 TONS STEEL/HEAT
PLANT RECYCLED WATER
STEAM
483.7 L/sec
(7667 GPM)
E
STEAM JET EJECTORS
STEAM
BAROMETRIC CONDENSERS
HOT WATER AND CONDENSED STEAM
483.7 L/sec
(7667 GPM)
F
(2) VARIABLE SPEED PUMPS (1) OPER. (1) STAND-BY
HOT WELL
VACUUM DEGASSER
CHAMBER TYPE - INDUCTION STIRRING
(STOKES)
CYCLE TIME: APPROX. 20 MIN.
189.3 ℓ/SEC (3000 GPM) NON-DEGASSING CYCLE - CONTINUOUS
378.6 ℓ/SEC (6000 GPM), 567.9 ℓ/SEC (9000 GPM)
757.2 ℓ/SEC (12000 GPM) FOR DEGASSING CYCLE
DEPENDENT UPON HEAT TEMPERATURE
MILL CENTRAL WATER TREATMENT DEEP BED FILTER CLARIFIERS ETC
(4) BOOSTER PUMPS FOR VACUUM DEGASSER
(3000 GPM EACH)
189.3 ℓ/SEC EACH
OTHER MILL PROCESSES
△ = SAMPLING POINT
ENVIRONMENTAL PROTECTION AGENCY
STEEL INDUSTRY STUDY
VACUUM DEGASSING
WASTEWATER TREATMENT
WATERFLOW DIAGRAM
DWN. 2/1/78
REV. 9/18/78
FIGURE VII-6

VACUUM DEGASSING SUBCATEGORY

SECTION VIII

COST, ENERGY, AND NON-WATER QUALITY IMPACTS

Introduction

This section presents the estimated costs which will be incurred in applying the model treatment systems to the vacuum degassing subcategory. The analysis also considers the energy requirements, the non-water quality impacts, and the techniques, magnitude, and costs associated with the application of the model treatment systems.

Actual Costs Incurred by the Plants Sampled or Solicited for this Study

The water pollution control costs supplied by the industry for vacuum degassing operations sampled during this study or responding to the D-DCPs, are presented in Table VIII-1. These costs have been updated, from the then current year cost data, to July 1, 1978 dollars. In several instances the costs reported by the industry represented total expenditures for central treatment systems. Where possible, these costs were apportioned to vacuum degassing wastewaters, however, this could not be done in all cases.

The Agency compared the capital cost data reported by the industry with the Agency's estimated costs developed from the model treatment systems. The Agency made this comparison to ensure that its cost estimates for the treatment models are sufficient to cover site-specific, retrofit, and other incidental costs associated with the systems. A summary of costs reported by the industry (refer to Table VIII-1) and the estimated model expenditures (as factored on the basis of production from the model costs) follows:

Plant No.	Actual Costs-$	Estimated Costs-$
0088A	367,900	411,400
0584F	879,000	2,827,700
0684E	1,711,800	1,791,100
0856F	109,700	112,900
0868B	324,200	1,306,300
TOTAL	3,392,600	6,449,400

These costs are for facilities in place as of January 1, 1978. In all instances, the Agency's estimated costs are greater than the actual costs reported by the industry. The estimated costs for Plants 0584F and 0868B are significantly higher than actual industry costs. The Agency believes these differences are attributable to the fact that vacuum degassing wastewaters at these plants are treated in large, more cost-effective central treatment facilities. Without costs for

these plants, the comparison would be $2,189,400 (actual) and $2,315,400 (estimated). The Agency has concluded that the estimated costs are sufficiently generous to cover the various site-specific and other incidental costs. In fact, the above data indicate the Agency may be overstating costs for this subcategory. The cost estimate review in Volume I provides further verification of the appropriateness of the model treatment system costs.

Control and Treatment Technologies (C&TT)

Recommended for Use in the Vacuum Degassing Subcategory

A summary of the wastewater treatment components considered in the development of BPT and BAT effluent limitations is presented in Table VIII-2. It should be noted that the regulation does not require the installation of these components, as any treatment system or operating practice which achieves the effluent limitations is adequate. The following items are discussed in Table VIII-2.

1. Technology step description

2. Implementation time

3. Land requirements

Figure VIII-1 illustrates the treatment alternatives considered for vacuum degassing operations.

Cost, Energy, and Non-water Quality Impacts

General Introduction

The installation of BPT and BAT, NSPS, PSES, and PSNS alternative wastewater treatment systems will require additional funding (both investment and operating) and energy requirements. Costs and energy requirements were estimated on the basis of the alternative treatment systems developed in Sections IX through XIII and are presented in the tables and text of this section. This section also presents the air pollution, water consumption, and solid waste disposal requirements which may result from compliance with the limitations and standards.

Estimated Costs for the Installation

of Pollution Control Technologies

A. Costs Required to Achieve the BPT Limitations

As a first step in estimating the cost of complying with the BPT limitations, the Agency developed a treatment model upon which cost estimates could be based. The model size (tons/day) was based upon the average production capacity for all vacuum degassing operations. The treatment model applied flow was also based upon the average of existing plants. The components and

effluent flow discussed in Sections IX and X were incorporated to complete the development of the treatment model. The Agency then developed the unit costs for each treatment model component. Table VIII-3 presents the estimated capital and annual costs for the BPT model treatment system. The Agency determined the capital requirements needed to achieve the BPT limitations by applying the treatment component model costs, adjusted for size, to each vacuum degassing operation. To assess the cost of the limitations on the industry, the Agency estimated the expenditures which will be required to bring vacuum degassing operations from current (July 1, 1981) treatment levels to the BPT model treatment level. The estimated capital requirement of the BPT limitations for this subcategory is 7.47 million dollars, while the associated estimated annual cost is 1.11 million dollars.

B. Costs Required to Achieve the BAT Limitations

The Agency considered three alternative treatment systems for vacuum degassing operations. The rationale for selecting, and additional details regarding these alternatives, are discussed in Section X. The additional investment and annual expenditures associated with the BAT treatment alternatives are presented in Table VIII-4. The Agency determined the additional capital and annual costs for the subcategory by factoring the unit costs for each component by the production for each vacuum degassing operation requiring the component. The estimated investment and annual costs for each treatment alternative for the vacuum degassing subcategory follow.

BAT	Investment Costs $		Annual Costs $	
Alternative	In-Place	Required	In-Place	Required
1	0	779,600	0	104,900
2	204,000	2,823,800	29,800	391,300
3	0	35,995,200	0	4,897,500

C. BCT Cost Comparison

BCT has been Reserved.

D. NSPS Costs

The Agency developed four alternative treatment systems for those new vacuum degassing facilities constructed after proposal of the New Source Performance Standards. The NSPS alternative treatment systems are the same as the BPT and BAT alternative treatment systems. The NSPS treatment model costs are identical to the costs for BPT and BAT and are presented in Table VIII-4.

E. Pretreatment Costs

Pretreatment standards apply to those plants which discharge their wastewaters to POTW systems. The model pretreatment systems are the same as the BPT and BAT treatment systems. The pretreatment systems provide for a reduction in effluent flow and the removal of toxic metals. Refer to Section XIII for additional information pertaining to pretreatment standards. The model costs for the pretreatment system are the same as the costs for the model NSPS systems (refer to Table VIII-4). There are no vacuum degassing operations with wastewaters currently discharged to POTWs.

Energy Impacts

The major energy expenditures for the subcategory will be required in the BPT model treatment system, while the BAT treatment alternatives require relatively minor additional energy expenditures. This relationship reflects the incorporation of recycle and cooling tower technology (the primary energy consumers) at BPT. Energy requirements at NSPS and pretreatment will be similar to the total corresponding BPT/BAT systems. In any event, the energy required to achieve compliance with the limitations and standards is not considered significant.

A. Energy Impacts at BPT

The estimated energy requirement for the BPT limitations is based upon the assumption that treatment systems similar to the model treatment system will be installed at each vacuum degassing operation. On this basis, the annual energy use for the BPT model treatment system for all vacuum degassing operations will be 34.5 million kilowatt hours of electricity. This estimate represents 0.06% of the 57 billion kilowatt hours of electricity used by the steel industry in 1978.

B. Energy Impacts at BAT

The estimated energy requirements for the BAT limitations are based on the same assumptions noted above for BPT. The additional estimated energy requirements, and their relationship to the 1978 industry power use, needed to upgrade from BPT to the two alternative BAT treatment levels are:

BAT Alternative	kwh per Year	% of Industry Usage
1	240,000	0.0004
2	1,440,000	0.003
3	19,560,000	0.034

These requirements are not significant in relation to total industry use. In addition, the Agency concludes that the

benefits of pollution control justify the minor impacts associated with energy consumption.

C. Energy Impacts for NSPS and Pretreatment

The energy requirements for each of the NSPS, PSNS, and PSES alternative treatment systems follow:

Model	kwh per Year
NSPS-1/PSES-1/PSNS-1	1.04 million
NSPS-2/PSES-2/PSNS-2	1.05 million
NSPS-3	1.09 million
PSES-3/PSNS-3	1.08 million
NSPS-4/PSES-4/PSNS-4	1.70 million

The Agency did not estimate total energy impacts for NSPS, PSNS, and PSES treatment systems since projections of future additions in this subcategory have not been made as part of this study and since no operations in this subcategory currently discharge to POTWs.

Non-Water Quality Impacts

The Agency believes that the non-water quality impacts associated with compliance with these limitations and standards are minimal. The three impacts which the Agency evaluated are air pollution, solid waste disposal, and water consumption.

A. Air Pollution

The use of cooling towers in the BPT model treatment system will result in the generation of water vapor plumes. However, these plumes should not contain any significant levels of particulates or volatile organics. The Agency does not expect any other air pollution impacts to occur as a result of compliance with the BPT or BAT limitations or NSPS, PSES, or PSNS.

B. Solid Waste Disposal

The treatment steps incorporated in the model BPT and BAT alternative treatment systems will generate moderate quantities of solid wastes, consisting of the solids removed from the process. A summary of the solid waste generation rates for all vacuum degassing operations for the BPT and BAT alternative treatment systems follows.

Treatment Level	Solid Waste Generation for the Subcategory (Tons/Year)
BPT System	2640
BAT - 1	minimal (included in BPT)
BAT - 2	minimal (included in BPT)
BAT - 3	minimal (included in BPT)

As shown above, a moderate amount of solid wastes are generated by the BPT model treatment system, while the BAT alternative treatment systems generate minor incremental amounts of solid wastes (about one percent of the BPT level). These solids require proper disposal.

The estimated amounts of solid wastes generated by the model NSPS, PSNS, and PSES systems are about 80 tons per year.

As noted previously, the NSPS, PSNS, and PSES alternative treatment systems are the same as the BPT/BAT treatment systems. The solid wastes generated at the NSPS, PSNS, and PSES levels are of the same nature and present the same disposal requirements as those for BPT and BAT.

C. Water Consumption

In the vacuum degassing subcategory cooling towers are components of the BPT, BAT, NSPS, PSNS, and PSES alternative treatment systems. Cooling towers are used to reduce system heat loads and result in some degree of water consumption as a consequence of evaporation. Because the Agency previously received comments that the water consumed by evaporation in these cooling devices may result in adverse environmental impacts for plants in arid or semi-arid areas, the Agency analyzed the degree of water consumption. As discussed below, the Agency found the water loss to be minimal and justified by the pollution control benefits. Since this degree of consumption is minimal, plants in all geographic regions could install these cooling devices if needed to achieve the effluent limitations and standards. High recycle rates in arid or semi-arid regions will also serve to minimize surface and subsurface water withdrawals.

The Agency estimates that the total raw waste flow for vacuum degassing operations is about 55.4 MGD, of which 0.70 MGD is presently consumed in existing cooling devices. In order to achieve the BPT and BAT effluent limitations, the additional water consumption for the subcategory would amount to 0.25 MGD, or 0.45% of the total volume applied. The impact of the consumptive use of water is minimal, especially since these cooling devices allow higher recycle rates, thus significantly reducing the volumes of water used and discharged from the process.

Summary of Impacts

In summary, the Agency concludes that the pollutant load reduction benefits described below for the vacuum degassing subcategory justify any adverse energy and non-water quality environmental impacts.

	Discharge Loads (Tons/Year)		
	Raw Waste	BPT	BAT
Flow, MGD	55.4	0.9	0.9
TSS	5066	48.2	31.2
Toxic Metals	667	8.4	1.3

The Agency also concludes that the effluent reduction benefits associated with compliance with new source standards (NSPS, PSNS) outweigh the the adverse energy and non-water quality environmental impacts.

TABLE VIII-1

EFFLUENT TREATMENT COSTS
VACUUM DEGASSING

(All costs are expressed in July, 1978 Dollars)

Plant Code	AC	AD	-	-	-
Reference Code	0584F	0868B	0088A	0684E	0856F
	Original Survey	Original Survey	D-DCP	D-DCP	D-DCP
Initial Investment	$879,000	$324,244	$367,864	$1,711,777	$109,728
Annual Costs					
Capital (1)	79,022	29,150	33,071	153,889	9,865
Oper. & Maint.	67,156	89,301	-	-	-
Energy & Power	Incl. Above	Incl. Above	-	-	-
Chemical Costs	-	-	-	-	-
Other (Sludge, etc.)	-	-	-	-	-
TOTAL	$146,178	$118,451	-	-	-
$/Ton	0.061	0.295	-	-	-
$/1000 Gal. Treated	0.070	1.509	-	-	-

(1) The capital was calculated by using the following formula: (0.0899) x (initial investment).

-: Insufficient data.

NOTE: No effluent treatment costs were available for Plants E, G, 062, 065, and 068.

TABLE VIII-2

CONTROL AND TREATMENT TECHNOLOGIES
VACUUM DEGASSING SUBCATEGORY

C&TT Step	Description	Implementation Time (months)	Land Usage (ft^2)
A	SCALE PIT - This component (or a classifier) provides substantial reductions in the levels and loads of the suspended solids and those pollutants in the particulate form. This reduction results from gravity sedimentation.	6 to 8	625
B	COOLING TOWER - This step provides a reduction in the wastewater heat load prior to the recycle of these wastewaters.	18 to 20	900
C	RECYCLE - Ninety-eight percent of the cooling tower effluent is returned to the process. This step serves to reduce the pollutant load discharged from the process.	12 to 14	625
D	PRESSURE FILTRATION - Filters provide additional suspended solids and particulate pollutant removal.	15 to 18	625
E	NEUTRALIZATION WITH LIME - Lime is added via pH control, in order to provide toxic metals removal capability. This capability results from the removal, by sedimentation, of metallic hydroxide precipitates.	12	625
F	INCLINED PLATE SEPARATOR - This component provides additional suspended solids and particulate pollutant removal capability. This removal capability results from the enhanced sedimentation performance of this component	10 to 12	50

TABLE VIII-2
CONTROL AND TREATMENT TECHNOLOGIES
VACUUM DEGASSING SUBCATEGORY

C&TT Step	Description	Implementation Time (months)	Land Usage (ft^2)
G	NEUTRALIZATION WITH ACID - The pH of the BAT Alternative No. 2 model treatment system effluent is monitored and adjusted as necessary to assure that the treated effluent pH is within the neutral range.	8 to 10	625
H	EVAPORATION - The effluent from the BPT treatment system model is delivered to a vapor decompression evaporation system. This system produces a distillate quality effluent and crystalline solids.	18 to 20	2000
I	RECYCLE - The effluent of Step E is returned to the process as a makeup water supply.	12 to 14	625

TABLE VIII-3

BPT TREATMENT MODEL COSTS: BASIS 7/1/78 DOLLARS

Subcategory : Vacuum Degassing

Model Size-TPD : 1,200
Oper. Days/Year: 365
Turns/Day : 3

C&TT Step	A	B	C	Total
Investment ($ x 10^{-3})	95.0	627.0	394.0	1,116.0
Annual Costs ($ x 10^{-3})				
Capital	8.5	56.4	35.4	100.3
Operation & Maintenance	3.3	21.9	13.8	39.0
Land	0.1	0.3	0.1	0.5
Sludge Disposal	0.4			0.4
Hazardous Waste Disposal				
Oil Disposal				
Energy & Power		26.1		26.1
Steam				
Waste Acid				
Crystal Disposal				
Chemical				
TOTAL	12.3	104.7	49.3	166.3
Credits				
Scale				
Sinter				
Oil				
Acid Recovery				
TOTAL CREDITS				
NET TOTAL	12.3	104.7	49.3	166.3

KEY TO C&TT STEPS

A: Scale Pit
B: Cooling Tower
C: Recycle

TABLE VIII-4

BAT/PSES/PSNS/NSPS TREATMENT MODEL COSTS: BASIS 7/1/78 DOLLARS

Subcategory: Vacuum Degassing

Model Size - TPD: 1,200
Oper. Days/Year : 365
Turns/Day : 3

C&TT Step	Total BPT	BAT Alternative 1		BAT Alternative 2				BAT Alternative 3		
		D	Total	E	F	G*	Total	H	I	Total
Investment ($ x 10^{-3})	1,116.0	32.0	32.0	29.2	52.8	42.4	124.4	1,454.8	24.0	1,478.8
Annual Costs ($ x 10^{-3})										
Capital	100.3	2.9	2.9	2.6	4.7	3.8	11.1	130.8	2.2	133.0
Operation & Maintenance	39.0	1.1	1.1	1.0	1.8	1.5	4.3	50.9	0.8	51.7
Land	0.5	0.1	0.1	0.1	0.1		0.2	0.1	0.1	0.2
Sludge Disposal	0.4									
Hazardous Waste Disposal										
Oil Disposal										
Energy & Power	26.1	0.2	0.2	0.5	0.5	0.2	1.2	16.3		16.3
Steam										
Waste Acid										
Crystal Disposal										
Chemical				0.2		0.3	0.5			
TOTAL	166.3	4.3	4.3	4.4	7.1	5.8	17.3	198.1	3.1	201.2
Credits										
Scale										
Sinter										
Oil										
Acid Recovery										
TOTAL CREDITS										
NET TOTAL	166.3	4.3	4.3	4.4	7.1	5.8	17.3	198.1	3.1	201.2

KEY TO TREATMENT ALTERNATIVES

PSES-1, PSNS-1, NSPS-1 = BPT
PSES-2, PSNS-2, NSPS-2 = BPT + BAT-1
PSES-3, PSNS-3, NSPS-3 = BPT + BAT-2
PSES-4, PSNS-4, NSPS-4 = BPT + BAT-3

KEY TO C&TT STEPS

D: Pressure Filtration
E: Neutralization with Lime
F: Inclined Plate Separation
G: Neutralization with Acid
H: Vapor Compression Distillation
I: Recycle

* The pH control with acid treatment component was not included in the Model Costs for POTW dischargers.

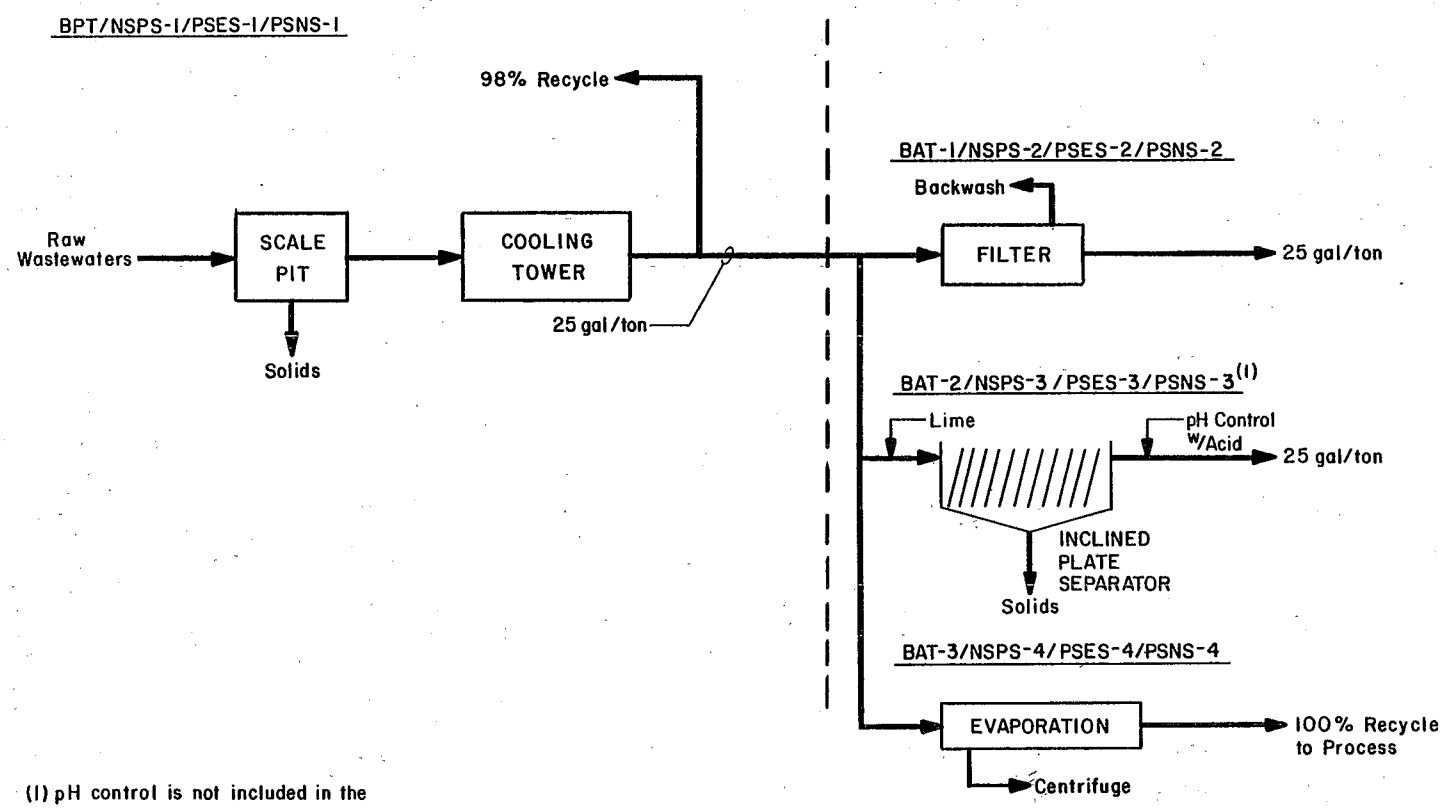

(1) pH control is not included in the PSES/PSNS models.

ENVIRONMENTAL PROTECTION AGENCY

STEEL INDUSTRY STUDY
VACUUM DEGASSING SUBCATEGORY
TREATMENT MODELS

Dwn. 11/17/81

FIGURE VIII-1

VACUUM DEGASSING SUBCATEGORY

SECTION IX

EFFLUENT QUALITY ATTAINABLE THROUGH THE APPLICATION OF THE BEST PRACTICABLE CONTROL TECHNOLOGY CURRENTLY AVAILABLE

The Agency has promulgated Best Practicable Control Technology Currently Available (BPT) limitations for vacuum degassing operations which are identical to those proposed on January 7, 1981 and to those originally promulgated in June, 1974.[1] The December 1980 and the June 1974 development documents[2] described the methods used in developing the originally promulgated limitations. This section focuses on the achievability of the BPT limitations. A review of the treatment processes and effluent limitations associated with the vacuum degassing subcategory follows.

Identification of BPT

The original BPT model treatment system included classifiers (i.e.,scale pits), cooling towers, and recycle systems. Following sedimentation in a classifier, most of the process wastewaters are recycled through a cooling tower to the process. The remaining process wastewaters are discharged as blowdown. Figure IX-1 depicts this treatment system.

The BPT effluent limitations are presented below:

	kg/kkg of Product (lb/1000 lb of Product)	
	Daily Maximum	30-Day Average
Suspended Solids	0.0156	0.00521
pH (Units)	6.0 to 9.0	

[1]Federal Register; January 7, 1981 page 1858 and Friday, June 28, 1974; Part II, Environmental Protection Agency; Iron and Steel Manufacturing Point Source Category; Effluent Guidelines and Standards; Pages 24114-24133.
[2]EPA 440/1-80/024-b (Volumes I thru VI) and EPA 440/1-74-024-a Development Document for Effluent Limitations Guidelines and New Source Performance Standards for the Steel Making Segment of the Iron and Steel Manufacturing Point Source Category.

Rationale for BPT

Treatment System

As noted in Section VII, each of the BPT model treatment system components is in use at a number of vacuum degassing operations. Based upon widespread use in the industry, the Agency believes that the model treatment system is appropriate.

Model Treatment System Flow Rate

Table IX-1 presents the available effluent flow data reported in the DCP or D-DCP responses or observed during sampling visits at vacuum degassing operations. A treatment model effluent flow of 25 gal/ton was used as the model flow for the originally promulgated and reproposed BPT effuent limitations. The data presented in Table IX-1 show that half of the plants achieve flows well below (46%) the model effluent flow. In fact, the average effluent flow of those plants which practice recycle (10 of the 18 values on Table IX-1) is 8.2 gal/ton. Of the eight plants which are not included in this average, seven do not practice recycle while the remaining plant has a recycle rate of 81%. Referring to Table V-1, this recycle rate is substantially below the other recycle rates noted in the data base. In consideration of these effluent flow data, the Agency concludes that the treatment model effluent flow is well substantiated.

Justification of BPT Limitations

Table IX-2 presents sampled plant data which demonstrate the achievability of the BPT effluent limitations. As only one of these plants has a separate sedimentation step, the ability to achieve the BPT limitations with treatment systems which differ from the BPT model treatment system is also demonstrated. The remaining sampled plants not listed in Table IX-2 did not achieve the BPT limitations because the model treatment systems, or equivalent, were not installed at these plants. By reducing effluent flows to approximately the level included in the BPT model treatment system, these plants would be able to achieve the BPT effluent limitations.

TABLE IX-1

JUSTIFICATION OF TREATMENT MODEL EFFLUENT FLOW
VACUUM DEGASSING SUBCATEGORY

Plant Reference Code	Discharge Flow (gal/ton)	Source
0020B	0 *	Visit
0060	272	DCP
0060D	82	DCP
0088A	10.6 *	D-DCP
0088A	10.6 *	D-DCP
0248B	0 *	DCP
0496	0 *	Visit
0576A	475	DCP
0584F	4.4 *	D-DCP
0684E	9.8 *	DCP
0684E	11.5 *	D-DCP
0684H	682	Visit
0804A	178	DCP
0804B	33	DCP
0856F	262	DCP
0856F	262	DCP
0856R	436	Visit
0868B	2.3 *	Visit

* Flows which support the treatment model effluent flow.

TABLE IX-2

JUSTIFICATION OF BPT LIMITATIONS
VACUUM DEGASSING SUBCATEGORY

	Suspended Solids (kg/kkg)	pH (Units)	C&TT Components
BPT	0.00521	6-9	PSP,CT,RTP-98
Plants			
AD(0868B)	0.000556	6.8	PSP,FD(UNK)P, RTP98.8
E(0020B)	Zero Discharge	-	CT,RTP-100
G(0856R)	0.00255	6.4	OT
0584F(1)	0.000532	4.9	CT,RTP-98
0684E(1)	0.00297	8.4	FLO(2),FLL, FLP,CL,CT,RTP-99.6

(1) Based upon D-DCP analytical data
(2) Flocculation with ferric chloride

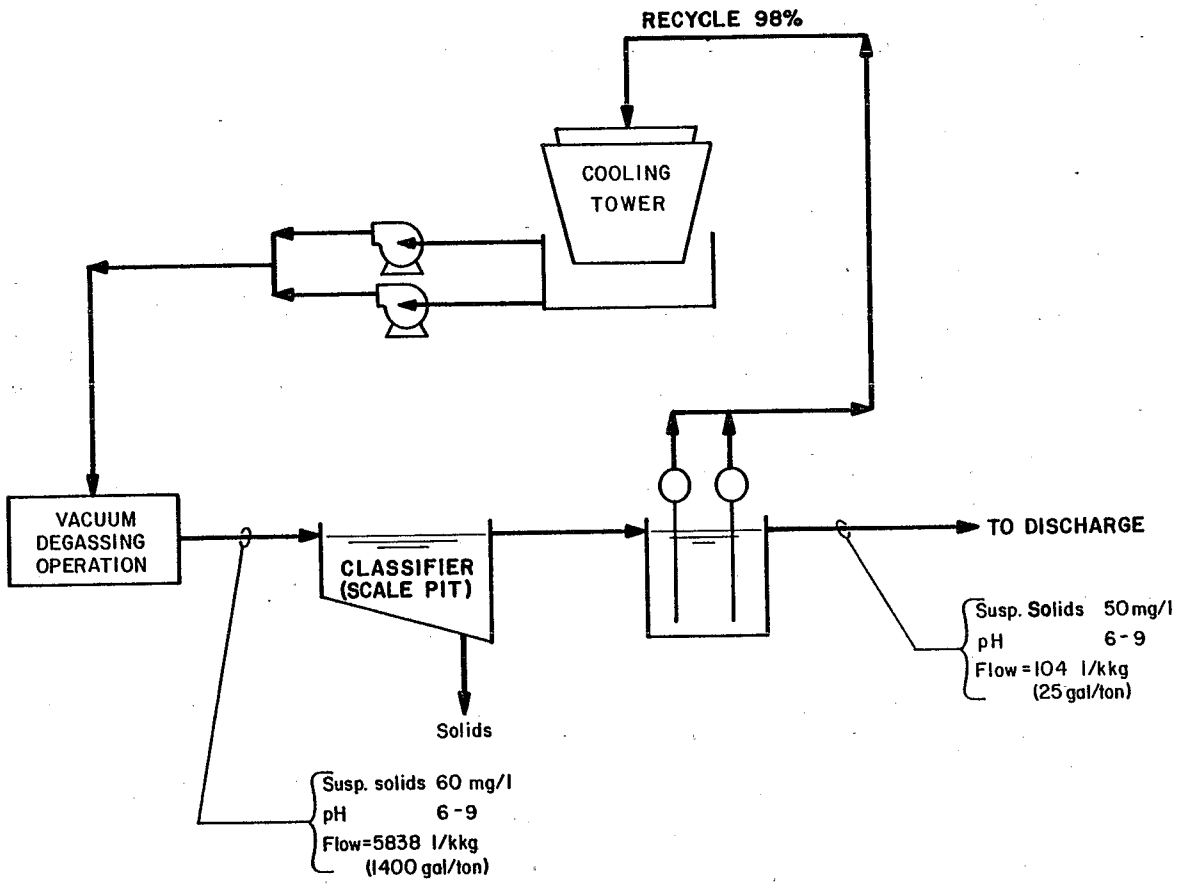

ENVIRONMENTAL PROTECTION AGENCY			
STEEL INDUSTRY STUDY VACUUM DEGASSING BPT MODEL			
Dwn. 6/1/78			FIGURE IX-1

VACUUM DEGASSING SUBCATEGORY

SECTION X

EFFLUENT QUALITY ATTAINABLE THROUGH THE APPLICATION OF THE BEST AVAILABLE TECHNOLOGY ECONOMICALLY ACHIEVABLE

Introduction

This section identifies three BAT alternative treatment systems and the respective effluent levels considered by the Agency for vacuum degassing operations. In addition, the rationale for selecting the treatment technologies, discharge flow rates, and effluent pollutant concentrations are presented. Finally, the selection of the BAT model treatment technologies which serve as the basis for the BAT effluent limitations is reviewed.

Identificaton of BAT

Based upon the information contained in Sections III through VIII, the Agency developed the following model treatment technologies (as add-ons to the BPT model treatment system) to serve as BAT alternative treatment systems for vacuum degassing operations.

1. BAT Alternative 1

   In the first BAT Alternative, filtration of the BPT treatment system blowdown of 25 gal/ton is provided to remove particulate toxic metals.

2. BAT Alternative 2

   The second BAT alternative includes lime precipitation, sedimentation, and pH control to remove dissolved and particulate toxic metals.

3. BAT Alternative 3

   This alternative includes vapor compression distillation to achieve zero discharge. The slurry formed in the process is dewatered and the high quality distillate water is returned to the process.

Figure VIII-1 illustrates the BAT alternative treatment systems for the vacuum degassing subcategory. These treatment technologies are in use at one or more plants or demonstrated in other wastewater treatment applications and are considered to be capable of attaining the BAT effluent limitations.

The discharge flow, effluent quality and associated effluent limitations are presented in Table X-1 for each alternative. The

rationale for selecting those toxic metal pollutants considered for limitation is presented in Section VI. Treatment of those toxic pollutants found at high levels in the process wastewaters will result in treatment for other similar toxic pollutants found at lower levels. Although several toxic metal pollutants are found in vacuum degassing process wastewaters, the Agency considered limitations for only two toxic metals (lead and zinc) at BAT, NSPS, PSNS, and PSES in this subcategory. The Agency's selection of those pollutants for which limitations and standards were considered is based upon the following considerations: the relative levels, loads, and environmental impacts of each pollutant; the ability of the selected toxic metal pollutants to serve as indicators of overall and toxic metals treatment performance; the need for consistency among subcategories to facilitate central treatment; and the need to develop practical monitoring requirements for the industry. While the Agency found other toxic metals in vacuum degassing wastewaters, compliance with the limitations for the two toxic metals listed in Table X-1 will provide control of the other toxic metals. Investment and annual costs for the BAT alternative treatment systems are presented in Table VIII-4.

Rationale for the Selection of the BAT Alternative

The following discussion presents the rationale for selecting the model BAT treatment system, the model effluent flow rate, and the concentration levels of the limited pollutants.

Treatment Technologies

The treatment model applied and discharge flows (retained from the BPT level of treatment) are based upon a system recycle rate of 98%. Table V-1 summarizes the recycle rates of those vacuum degassing operations for which useable data were provided. Eight of the ten plants which have recycle systems (a total of fifteen plants provided enough information to determine the system operating mode) equalled or exceeded the 98% recycle rate. In fact, for three of the plants with recycle systems, no discharge of process wastewater pollutants has been reported. One of these operations has converted to an argon degassing mode of operation. The treatment system recycle rate is therefore well documented within this subcategory.

Filtration is included in the first BAT alternative treatment system in order to remove that portion of the toxic metals load entrained in suspended solids. Filtration is employed at two of the plants in this subcategory (0496 and 0868B) and has widespread use throughout the steel industry.

Lime precipitation and sedimentation is provided to remove both particulate and dissolved toxic metals. This technology, or equivalent, is demonstrated at Plants 0060, 0088A, and 0684E, and for the treatment of wastewaters from other steel industry wastewaters.

Evaporation is incorporated in the third BAT treatment alternative for the purpose of evaluating the cost of achieving zero discharge in the vacuum degassing subcategory. Although not employed in this subcategory, the effectiveness of this treatment technology has been demonstrated in pilot studies and in wastewater treatment applications in other metals manufacturing operations.

Flows

The model applied and discharge flows (1400 gal/ton and 25 gal/ton, respectively) developed for BPT are retained in the BAT treatment alternatives. The Agency believes the model discharge flow of 25 gal/ton is achievable for all vacuum degassing operations and represents good operation of properly designed high rate recycle systems for vacuum degassing wastewaters.

Wastewater Quality

Following are the average effluent concentrations incorporated in each BAT treatment alternative (the maximum values are enclosed in parentheses):

	BAT Alt. 1	BAT Alt. 2	BAT Alt. 3
Lead, mg/l	0.7 (2.1)	0.3 (0.9)	Zero Discharge
Zinc, mg/l	4.5 (13.5)	0.45 (1.35)	Zero Discharge

The development of these values is discussed below and presented in Appendix A of Volume I.

Toxic Metals

A. BAT Alternative 1

A review of the analytical data for this subcategory indicate that a portion of the toxic metals are in particulate form, and, therefore, removable by filtration. Long-term filtration system effluent data for hot forming operations were reviewed to determine the toxic metals removal capabilities of filtration systems. Reference is made to Appendix A of Volume I for the derivation of those performance standards. However, the sampled plant filtration data available for vacuum degassing operations indicate that toxic metals are not substantially removed principally because some of the toxic metals present in vacuum degassing wastewaters are dissolved. Thus, the effluent concentrations presented above are higher than those shown in Appendix A (Volume I) for hot forming operations.

B. BAT Alternative 2

Performance data for lime precipitation systems for steelmaking wastewaters are presented in Table A-48 of Appendix A (Volume I).

These performance data were obtained for wastewaters that are more highly contaminated with particulate and dissolved toxic metals than are vacuum degassing wastewaters. Thus, the performance standards developed for the steelmaking wastewaters are applicable to vacuum degassing operations. Also shown below are performance data for a full scale recycle and sedimentation system for vacuum degassing, continuous casting, and hot forming wastewaters (Plant 0684E). The untreated vacuum degassing and continuous casting wastewaters at this plant comprise about one half of the wastewaters treated in the central treatment facility at this plant.

Pollutant	Number of Observations	Average
Suspended Solids	159	20 mg/l
Lead	26	0.061
Zinc	26	0.323

Based upon the steelmaking data and the data presented above, the Agency established the 30-day average model plant effluent concentrations at 0.30 mg/l and 0.45 mg/l for lead and zinc, respectively.

C. BAT Alternative 3

As noted previously in this section, BAT Alternative 3 includes an evaporation system to achieve zero discharge. This technology has not been demonstrated on a full scale basis within this subcategory. Thus, the Agency based its assessment of the capabilities of this technology upon pilot studies and other metals manufacturing wastewater treatment applications.

Selection of a BAT Alternative

The Agency selected BAT Alternative 2, depicted in Figure X-1, as the BAT model treatment system. The selection process involved reviewing the toxicity levels of each pollutant considered for limitation at BAT, the effluent levels of these pollutants in each treatment alternative and the cost and feasibility of the alternatives. On the basis of these considerations, the Agency determined that BAT 2 provides the most significant benefits with regard to reductions in toxic pollutant effluent loads. BAT 1 was not selected because it does not remove those toxic metals that are dissolved in the wastewaters. BAT Alternative 3 was not selected on the basis of its high cost and high energy consumption. Following is a summary of the effluent loads (tons/year) for this subcategory.

	Raw Waste	BPT	BAT 1	BAT 2	BAT 3
Toxic Metals	667	8.4	8.4	1.3	0
TSS	5066	48.2	14.2	31.2	0

The BAT effluent limitations are presented in Table X-1 under the heading of BAT Alternative 2. The data presented in Table X-2 demonstrate the achievability of the BAT limitations.

TABLE X-1
BAT EFFLUENT LIMITATIONS GUIDELINES
VACUUM DEGASSING SUBCATEGORY

		BAT ALTERNATIVE 1		BAT ALTERNATIVE 2		BAT ALTERNATIVE 3	
		Concentration Basis (mg/l)	Effluent Limitations (kg/kkg of Product)	Concentration Basis (mg/l)	Effluent Limitations (kg/kkg of Product)	Concentration Basis (mg/l)	Effluent Limitations (kg/kkg of Product)
Discharge Flow (gal/ton)		25	—	25	—	0	—
Lead	Ave.	0.7	0.0000730	0.3	0.0000313*	—	—
	Max.	2.1	0.000219	0.9	0.0000939*	—	—
Zinc	Ave.	4.5	0.000469	0.45	0.0000469*	—	—
	Max.	13.5	0.00141	1.35	0.000141*	—	—

* - BAT Effluent Limitations

TABLE X-2

JUSTIFICATION OF BAT LIMITATIONS
VACUUM DEGASSING SUBCATEGORY

	Lead (kg/kkg)	Zinc (kg/kkg)	C&TT Components
BAT	0.0000313	0.0000469	PSP,CT,RTP-98,NL, TP,NA
Plants			
AD (0868B)	0.000004	0.000013	PSP,FG(UNK)P,RTP-98
E (0020B)	0.0	0.0	CT,RUP-100
G (0856R)	0.0	0.000018	OT
065 (0584F)	0.0	0.0	CT,RUP-100
062 (0496)	0.0	0.0	PSP,CT,FDS(UNK),RET-100
0684E*	0.0000313	NJ	CT,FLL,FLO,FLP,CL, RTP-99.6

* : Based upon D-DCP analytical data.
NJ: Not Justified

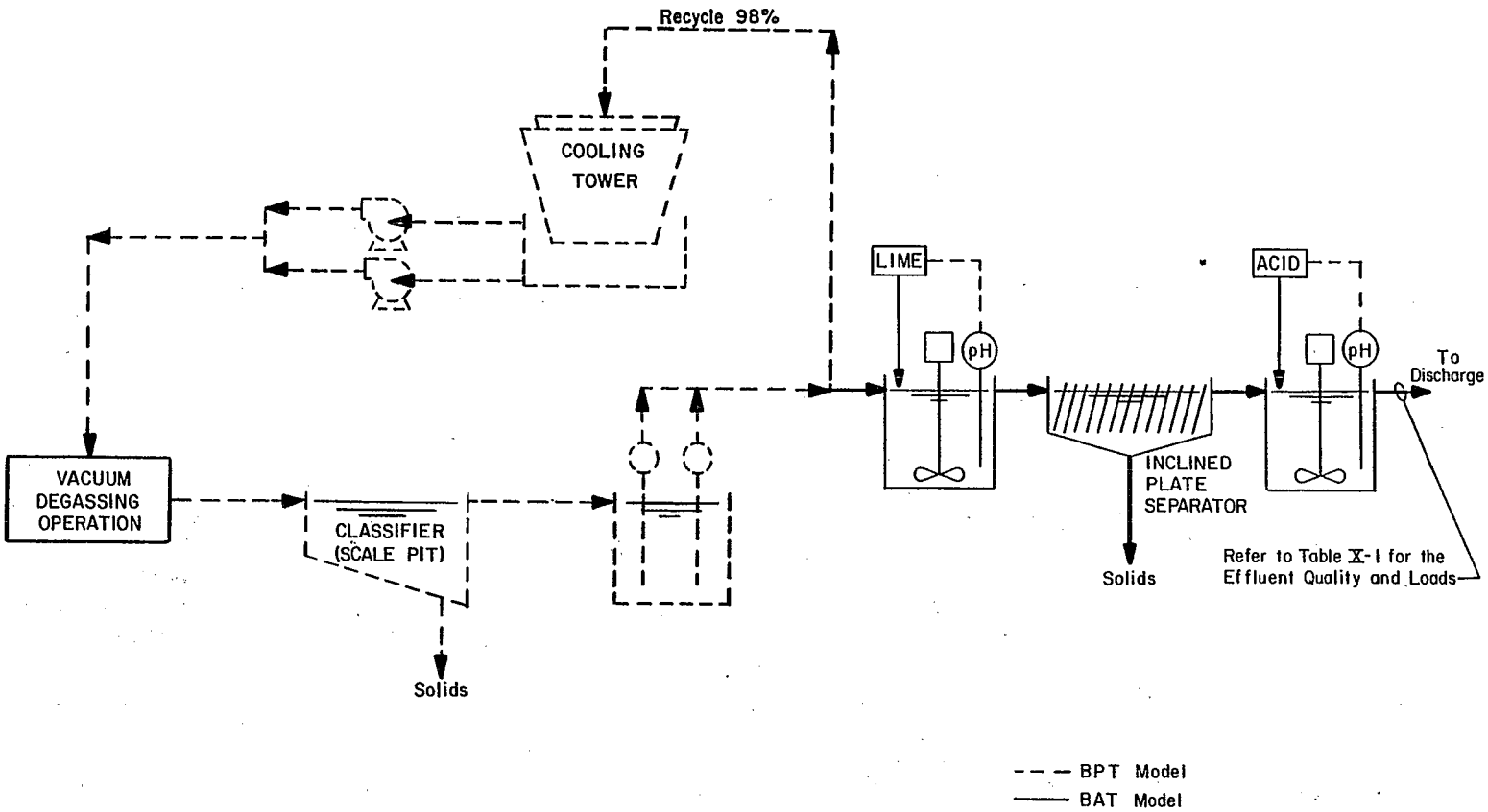

ENVIRONMENTAL PROTECTION AGENCY

STEEL INDUSTRY STUDY
VACUUM DEGASSING SUBCATEGORY
BAT TREATMENT MODEL

Dwn. 11/17/81

FIGURE X-1

VACUUM DEGASSING SUBCATEGORY

SECTION XI

BEST CONVENTIONAL POLLUTANT CONTROL TECHNOLOGY (BCT)

Introduction

The 1977 Amendments added Section 301(b)(2)(E) to the Act establishing "best conventional pollutant control technology" (BCT) for discharges of conventional pollutants from existing industrial point sources. Conventional pollutants are those defined in Section 304(a)(4) [biochemical oxygen demanding pollutants (BOD_5), total suspended solids (TSS), fecal coliform, and pH], and any additional pollutants defined by the Administrator as "conventional" (oil and grease, 44 FR 44501, July 30, 1979).

BCT is not an additional limitation but replaces BAT for the control of conventional pollutants. In addition to other factors specified in Section 304(b)(4)(B), the Act requires that BCT limitations be assessed in light of a two part "cost-reasonableness" test, American Paper Institute v. EPA, 660 F.2d 954 (4th Cir. 1981). The first test compares the cost for private industry to reduce its conventional pollutants with the costs to publicly owned treatment works for similar levels of reduction in their discharge of these pollutants. The second test examines the cost-effectiveness of additional industrial treatment beyond BPT. EPA must find that limitations are "reasonable" under both tests before establishing them as BCT. In no case may BCT be less stringent than BPT.

EPA published its methodology for carrying out the BCT analysis on August 29, 1979 (44 FR 50732). In the case mentioned above, the Court of Appeals ordered EPA to correct data errors underlying EPA's calculation of the first test, and to apply the second cost test. (EPA had argued that a second cost test was not required.)

EPA has determined that the BAT technology is capable of removing significant amounts of conventional pollutants. However, EPA has not yet proposed or promulgated a revised BCT methodology in response to the American Paper Institute v. EPA decision mentioned earlier. Thus, it is not now possible to apply the BCT cost test to this technology option. Accordingly, EPA is deferring a decision on the appropriate BCT limitations until EPA proposes the revised BCT methodology.

VACUUM DEGASSING SUBCATEGORY

SECTION XII

EFFLUENT QUALITY ATTAINABLE THROUGH THE APPLICATION OF NEW SOURCE PERFORMANCE STANDARDS

Introduction

The NSPS are based upon the degree of effluent reduction achievable through the application of the best available demonstrated control technology (BADCT), processes, operating methods, or other alternatives, including, where practicable, a standard permitting no discharge of pollutants. While the Agency has not promulgated NSPS as zero discharge, it had solicited comments on whether zero discharge could be established as NSPS for all vacuum degassing operations and considered whether that standard was appropriate.

NSPS Alternative 1

The first NSPS alternative is identical to the BPT model treatment system which includes sedimentation, cooling, and 98% recycle.

NSPS Alternative 2

The second NSPS treatment alternative uses the BPT and BAT Alternative 1 treatment components discussed in Sections IX and X. This system initially provides sedimentation of the raw process wastewaters in a classifier (or similar settling device). The major portion (98%) of the classifier effluent is recycled to the process through a cooling tower. The cooling tower is used to reduce the recycle system heat load. The system blowdown passes through a filter prior to discharge.

NSPS Alternative 3

This alternative includes the BPT model system and lime precipitation, sedimentation, and, pH control of the 2% blowdown to remove both particulate and dissolved toxic metals.

NSPS Alternative 4

The NSPS Alternative 4 treatment system includes the classifier, cooling tower, and recycle system described above as well as an evaporation system for the purpose of achieving zero discharge. This system is similar to the BPT and the BAT Alternative 3 systems discussed in Sections IX and X.

The NSPS treatment systems described above are depicted in Figure VIII-1. The corresponding effluent levels and loads are presented in Table XII-1. Cost data for the treatment alternatives are presented in Table VIII-4.

Rationale for Selection of NSPS

The NSPS treatment alternatives for the vacuum degassing subcategory are the same as the BPT and BAT model treatment systems described in Sections IX and X. Those alternatives are addressed collectively in the following discussions.

Treatment Technologies

As noted in Sections VII, IX, and X, classifiers and other sedimentation systems, high rate recycle systems, filtration systems, and precipitation systems are commonly used to treat wastewaters from vacuum degassing operations. Evaporative technologies, however, are not demonstrated for vacuum degassing operations.

The resulting effluent qualities for the NSPS alternatives are presented in Table XII-1. As noted in Section X, the critical pollutants and their respective effluent levels are based upon the capabilities of various wastewater treatment technologies. The pollutants listed in Table XII-1 include only those pollutants for which BAT limitations have been promulgated (refer to Section X for the factors considered in selecting these pollutants) as well as the conventional pollutants total suspended solids and pH.

Discharge Flow

The applied and discharge model flow rates developed for the BPT and BAT alternative treatment systems are applicable to the NSPS alternatives as well. Both the recycle rate of 98% (as defined by the treatment model applied and discharge flows) and the discharge flow of 25 gal/ton are demonstrated in the vacuum degassing subcategory at plants 0020B, 0088A, 0248B, 0496, 0584F, 0684E and 0868B.

Wastewater Quality

The effluent level (15 mg/l) for suspended solids in the first treatment alternative was developed on the basis of a statistical review of long-term analytical data for several wastewater filtration operations. This review is detailed in Appendix A of Volume I. The particulate matter suspended in degassing process wastewaters is similar to the suspended solids in the reference wastewaters noted above. In these reference wastewaters and in the degassing wastewaters, the suspended solids are discrete particles which are amenable to removal by filtration. Suspended solids concentrations (25 mg/l average) achievable with sedimentation systems on similar wastewaters are shown in Table A-48 of Appendix A of Volume I. Reference is made to Volume I for a detailed review of the development of the thirty-day average and daily maximum effluent suspended solids concentrations used as the basis for NSPS. Refer to Section X for the basis of the toxic metals standards.

Selection of an NSPS Alternative

The Agency selected NSPS Alternative 3, illustrated in Figure XII-1, as the NSPS model treatment system. This alternative was selected for the same reasons noted in the discussion in Section X regarding the selection of the BAT model treatment system.

The NSPS effluent standards are presented in Table XII-1 in the column for the third NSPS treatment alternative. The data presented in Table XII-2 demonstrate the achievability of the NSPS.

TABLE XII-1
NEW SOURCE PERFORMANCE STANDARDS
VACUUM DEGASSING SUBCATEGORY

		NSPS ALTERNATIVE 1		NSPS ALTERNATIVE 2		NSPS ALTERNATIVE 3		NSPS ALTERNATIVE 4	
		Concentration Basis (mg/l)	Effluent Standards (kg/kkg of Product)	Concentration Basis (mg/l)	Effluent Standards (kg/kkg of Product)	Concentration Basis (mg/l)	Effluent Standards (kg/kkg of Product)	Concentration Basis (mg/l)	Effluent Standards (kg/kkg of Product)
Discharge Flow (gal/ton)		25	—	25	—	25	—	0	—
Total Suspended Solids	Ave.	50	0.00521	15	0.00156	25	0.00261*	—	—
	Max.	150	0.0156	40	0.00417	70	0.00730*	—	—
pH		Witin the range 6.0 to 9.0		Within the range 6.0 to 9.0		Within the range 6.0 to 9.0*		—	
Lead	Ave.	0.7	0.0000730	0.7	0.0000730	0.3	0.0000313*	—	—
	Max.	2.1	0.000219	2.1	0.000219	0.9	0.0000939*	—	—
Zinc	Ave.	4.5	0.000469	4.5	0.000469	0.45	0.0000469*	—	—
	Max.	13.5	0.00141	13.5	0.00141	1.35	0.000141*	—	—

*-NSPS

TABLE XII-2

JUSTIFICATION OF NSPS
VACUUM DEGASSING SUBCATEGORY

	TSS (kg/kkg)	Lead (kg/kkg)	Zinc (kg/kkg)	pH (Units)	C&TT Components
NSPS	0.00261	0.0000313	0.0000469	6.0 to 9.0	PSP,CT,RTP-98, NL,TP,NA
Plants					
AD (0868B)	0.000556	0.000004	0.000013	6.8 to 7.0	PSP,FD(UNK)P,RTP-98
E (0020B)	0.0	0.0	0.0	6.5	CT,RUP-100
G (0856R)	NJ	0.0	0.000018	6.4	OT
062 (0496)	0.0	0.0	0.0	7.6 to 8.1	PSP,CT,FDS(UNK),RET
065 (0584F)	0.0	0.0	0.0	4.5 to 5.7	CT,RUP-100
0684E*	0.00216	0.0000313	NJ	8.4 to 8.5	CT,FLL,FLO,FLP, CL,RTP-99.6

* : Based upon D-DCP analytical data.
NJ: Not Justified

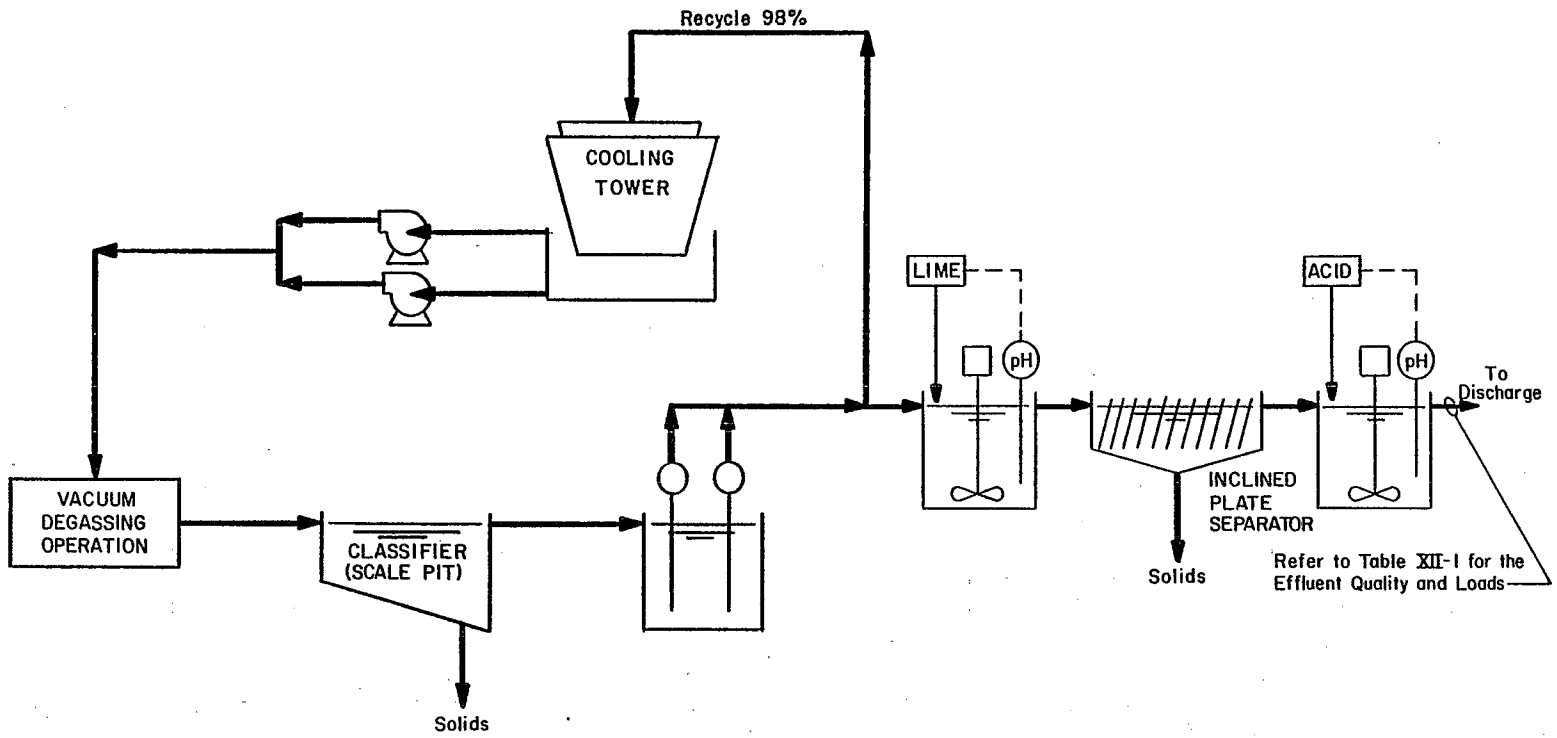

ENVIRONMENTAL PROTECTION AGENCY

STEEL INDUSTRY STUDY
VACUUM DEGASSING SUBCATEGORY
NSPS TREATMENT MODEL

Dwn. 11/17/81

FIGURE XII-1

VACUUM DEGASSING SUBCATEGORY

SECTION XIII

PRETREATMENT STANDARDS FOR DISCHARGES TO PUBLICLY OWNED TREATMENT WORKS

Introduction

This section presents alternative pretreatment systems for discharges from vacuum degassing operations to publicly owned treatment works (POTWs). There are currently no vacuum degassing wastewaters discharged to POTWs. The general pretreatment and categorical pretreatment standards applying to vacuum degassing operations are discussed below.

General Pretreatment Standards

For detailed information on Pretreatment Standards refer to 46 FR 9404 et seq, "General Pretreatment Regulations for Existng and New Sources of Pollution, (January 28, 1981). See also 47 FR 4518 (February 1, 1982). In particular, 40 CFR Part 403 describes national standards (prohibited and categorical standards), revision of categorical standards through removal allowances, and POTW pretreatment programs.

In establishing pretreatment standards for vacuum degassing operations, the Agency considered the objectives and requirements of the General Pretreatment Regulations. The Agency has determined that uncontrolled discharges of vacuum degassing wastewaters to POTWs would result in pass through of toxic metal pollutants at POTWs.

Alternative Pretreatment Systems

The Agency considered four model pretreatment systems for vacuum degassing operations. These systems are identical to the BPT model treatment system and the BAT alternatives. These alternatives are set out below and illustrated in Figure VIII-1.

A. PSES/PSNS Alternative 1

The first alternative is the same as the model BPT treatment system and includes a classifier, cooling tower, and 98% recycle of the wastewaters. A blowdown of 25 gal/ton is discharged to the POTW.

B. PSES/PSNS Alternative 2

The blowdown from Alternative 1 is filtered to remove particulate toxic metals. This alternative is the same as BAT Alternative 1.

C. PSES/PSNS Alternative 3

The blowdown from Alternative 1 is treated by lime precipitation and clarification to remove both particulate and dissolved toxic metals. This alternative is the same as BAT Alternative 2.

D. PSES/PSNS Alternative 4

The blowdown from Alternative 1 is processed in a vapor compression distillation system to achieve zero discharge. This alternative is the same as BAT Alternative 3.

Selection of a Pretreatment Alternative

The pretreatment alternatives described above are designed to control toxic metals, and thus are designed to minimize pass through of these pollutants at POTWs which may receive vacuum degassing wastewaters. The four pretreatment alternatives accomplish between 98.7% and 100% removal of the toxic metal pollutants limited at BAT.

PSES/PSNS Alternative 3 was selected as the basis for the promulgated PSES and PSNS. This alternative is the same as the selected BAT alternative for vacuum degassing operations. PSES/PSNS Alternative 3 provides for the greatest removal of toxic metals without the high costs associated with evaporative technologies. PSES/PSNS Alternatives 1 and 2 do not control the discharge of dissolved toxic metals found in vacuum degassing wastewaters. The removal rates of toxic metals from untreated vacuum degassing wastewaters for PSES/PSNS Alternative 3 are compared to the POTW removal rates for those metals:

	PSES/PSNS Model	POTW
Lead	99.6%	48%
Zinc	99.9%	65%

As shown above, the selected PSES/PSNS alternative will prevent pass through of toxic metals at POTWs to a significantly greater degree than would occur if vacuum degassing wastewaters were discharged untreated to POTWs. The achievability of these standards is reviewed in Sections IX and X. The model treatment system is depicted in Figure XIII-1 and the PSES and PSNS are presented in Table XIII-1.

TABLE XIII-1

PRETREATMENT EFFLUENT STANDARDS (Existing and New Sources)

VACUUM DEGASSING SUBCATEGORY

		PSES/PSNS ALTERNATIVE 1		PSES/PSNS ALTERNATIVE 2		PSES/PSNS ALTERNATIVE 3		PSES/PSNS ALTERNATIVE 4	
		Concentration Basis (mg/l)	Effluent Standards (kg/kkg of Product)	Concentration Basis (mg/l)	Effluent Standards (kg/kkg of Product)	Concentration Basis (mg/l)	Effluent Standards (kg/kkg of Product)	Concentration Basis (mg/l)	Effluent Standards (kg/kkg of Product)
Discharge Flow (gal/ton)		25	———	25	———	25	———	0	———
LEAD	Ave.	0.7	0.0000730	0.7	0.0000730	0.3	0.0000313*	———	———
	Max.	2.1	0.000219	2.1	0.000219	0.9	0.0000939*	———	———
ZINC	Ave.	4.5	0.000469	4.5	0.000469	0.45	0.0000469*	———	———
	Max.	13.5	0.00141	13.5	0.00141	1.35	0.000141*	———	———

* PSES and PSNS

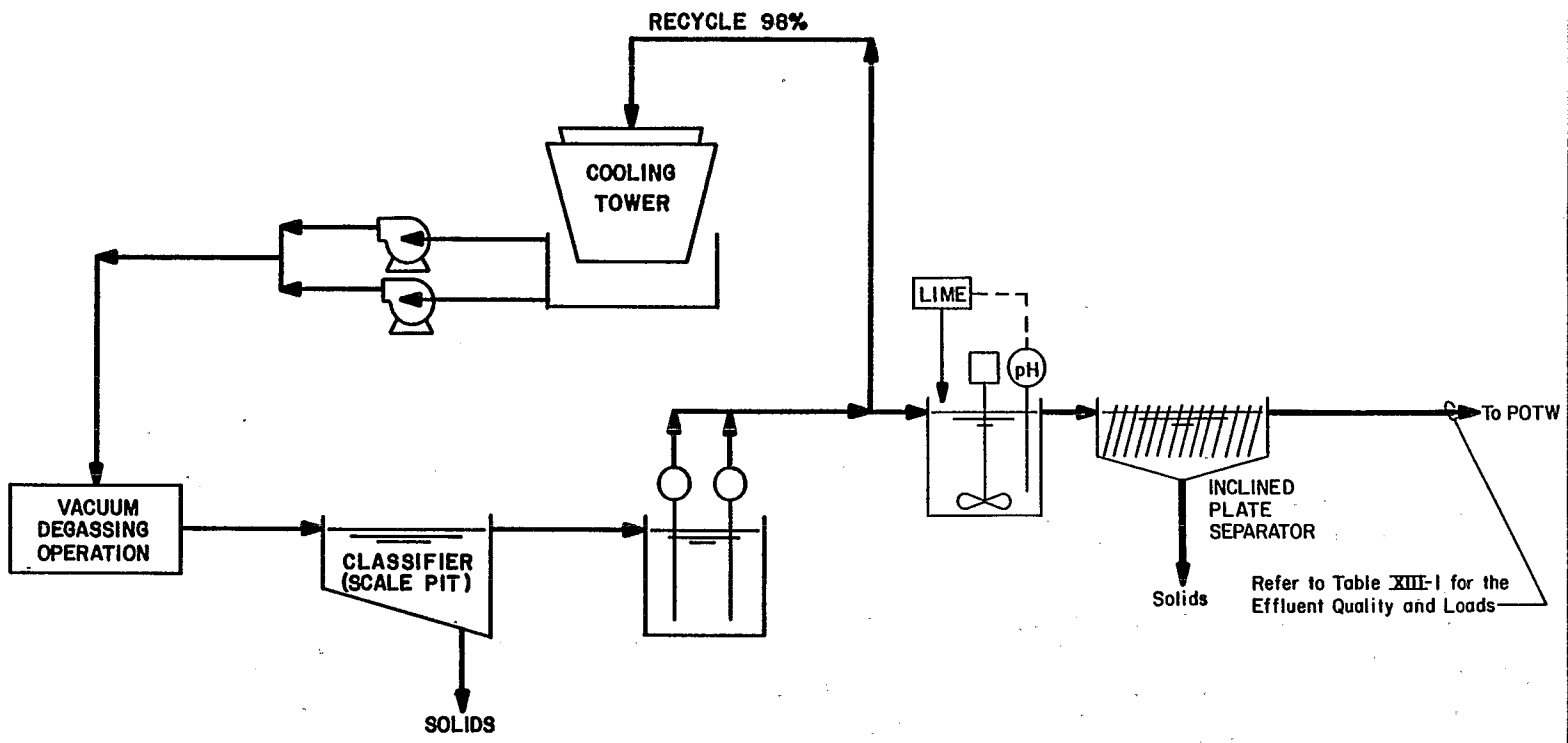

ENVIRONMENTAL PROTECTION AGENCY

STEEL INDUSTRY STUDY

VACUUM DEGASSING SUBCATEGORY

PRETREATMENT MODEL

Dwn.9/10/79

FIGURE XIII-1

CONTINUOUS CASTING SUBCATEGORY

SECTION I

PREFACE

The USEPA has promulgated effluent limitations and standards for the steel industry pursuant to Sections 301, 304, 306, 307 and 501 of the Clean Water Act. The regulation contains effluent limitations guidelines for best practicable control technology currently available (BPT),and best available technology economically achievable (BAT) as well as pretreatment standards for existing and new sources (PSES and PSNS) and new source performance standards (NSPS). Effluent limitations guidelines for best conventional pollutant control technology (BCT) have been reserved for future consideration.

This part of the Development Document highlights the technical aspects of EPA's study of the Continuous Casting Subcategory of the Iron and Steel Industry. Volume I of the Development Document addresses general issues pertaining to the industry, while other volumes contain specific subcategory reports.

CONTINUOUS CASTING SUBCATEGORY

SECTION II

CONCLUSIONS

Based on this study, a review of previous studies by EPA and comments received on the proposed regulation (46 FR 1858), the Agency has reached the following conclusions.

1. The Agency has retained one subcategory for all continuous casting operations. It found no significant differences in applied or discharge flow rates between slab, bloom, and billet continuous casters. Wastewater quality and flow rates do not differ significantly between carbon and specialty steel continuous casting operations. Pressure casting operations are not limited by this regulation.

2. The BPT limitations previously promulgated for continuous casting operations are practicable and achievable. In fact, the data base now available to the Agency demonstrates that the previous BPT limitations are more lenient than might now be justified. Nonetheless, the BPT limitations are identical to the limitations previously promulgated. The BPT limitations are based upon a model wastewater treatment system which includes filtration and recycle of continuous casting wastewaters.

3. Monitoring of continuous casting wastewaters revealed the presence of five toxic metal pollutants (chromium, copper, lead, selenium, and zinc). The discharge of these toxic pollutants can be reduced by several available economically achievable wastewater treatment technologies. A summary of the pollutant discharges from the continuous casting subcategory at the BPT, BAT and PSES levels of treatment, are shown below.

	Direct Discharges (Tons/Year)		
	Raw Waste	BPT	BAT
Flow (MGD)	200	4.4	0.9
TSS	18,268	266.5	29.3
Oil & Grease	7,612	66.6	5.9
Toxic Metals	493	10.8	1.7

	Indirect Discharges (Tons/Year)	
	Raw Waste	PSES
Flow, MGD	33.3	0.2
TSS	3,045	8.2
Oil & Grease	1,269	1.6
Toxic Metals	82.2	0.5

4. Based upon water pollution control facilities in place as of July 1, 1981, the Agency estimates that industry will incur the following costs to comply with the BPT and BAT effluent limitations and PSES for the continuous casting subcategory. The Agency has determined that the effluent reduction benefits associated with compliance with the effluent limitations and standards justify the costs presented below:

Costs (Millions of 7/1/78 Dollars)

	Investment		
	Total	In-place	Required
BPT	64.4	59.6	4.8
BAT	3.0	0.8	2.2
PSES	9.3	9.0	0.3
TOTAL	76.7	69.4	7.3

	Annual		
	Total	In-place	Required
BPT	9.4	8.6	0.8
BAT	0.4	0.1	0.3
PSES	1.4	1.3	0.1
TOTAL	11.2	10.0	1.2

The Agency has also determined that the effluent reduction benefits associated with compliance with new source standards (NSPS, PSNS) justify those costs.

5. The Agency has not promulgated BCT limitations for controlling conventional pollutants (TSS and oil and grease) in this subcategory. This section of the regulation is reserved for future consideration.

6. The Agency has promulgated BAT limitations for both lead and zinc as "indicator" pollutants for the five detected toxic pollutants and to facilitate central treatment with other compatible wastewaters: The BAT limitations are based upon a model treatment system flow of 25 GPT and concentrations of 0.3 mg/l for lead and 0.45 mg/l for zinc. These limitations are based upon lime precipitation and sedimentation.

7. The NSPS for the continuous casting subcategory are more stringent than the BPT limitations for conventional pollutants and are equal to the BAT limitations for toxic pollutants.

8. EPA has promulgated pretreatment standards for new and existing sources (PSNS and PSES) which are identical to the BAT limitations for toxic metals. These standards are intended to

minimize the impact of pollutants discharged from continuous casting operations which would pass through POTW operations.

9. With regard to the "remand issues," the Agency has concluded that:

   a. Relaxed effluent limitations are not appropriate for older continuous casting plants. Analysis indicates that the age of a continuous caster has no significant effect upon the ease or cost of retrofitting pollution control equipment.

   b. The effects of the consumptive use of water resulting from compliance with the effluent limitations will be minimal on both an industry-wide and on an arid or semi-arid regional basis. The model treatment systems include cooling towers and recycle systems. The Agency has determined that to retrofit all continuous casting plants with cooling towers would only result in a consumptive usage of 1.7% of the 238 MGD of water presently applied to continuous casters.

10. The Agency found that about thirty-five percent of the continuous casting operations achieve zero discharge. The Agency solicited comments on whether zero discharge limitations should be promulgated at the BAT, BCT, NSPS, PSES, and PSNS levels based upon the demonstrated performance of plants in this subcategory. Upon review of the comments received in response to this solicitation, the Agency believes that zero discharge cannot be achieved universally in this subcategory without the use of costly evaporative technologies. Thus, neither the BAT limitations nor the NSPS were promulgated on the basis of zero discharge.

11. Table II-1 presents the BPT effluent limitations as well as the treatment model flow and effluent quality data used to develop those limitations for the continuous casting subcategory. Table II-2 presents the BAT, NSPS, PSES, and PSNS effluent limitations and standards as well as the treatment model flow and effluent quality data used to develop those effluent limitations and standards for the continuous casting subcategory.

12. The cost data presented in conclusion No. 4 above are different than those used by the Agency in the economic impact analysis completed for this regulation. The Agency changed the selected BAT Alternative from Alternative No. 1 to Alternative No. 2 after the economic impact analysis was completed. The difference in required costs for these alternatives is $1.8 million for continuous casting operations. The Agency does not consider this difference or the difference in new source cost to be significant in terms of whether the costs of achieving the resulting effluent reduction benefits are justified. In addition, with respect to possible economic impacts, differences of this magnitude were accounted for in the sensitivity analysis conducted as part of the economic impact analysis.

TABLE II-1

BPT TREATMENT MODEL FLOW, EFFLUENT QUALITY, AND EFFLUENT LIMITATIONS
CONTINUOUS CASTING SUBCATEGORY

Pollutant	Concentration (mg/l) Daily Average	Concentration (mg/l) 30 Day Maximum	Effluent Limitation (kg/kkg of Product) Daily Average	Effluent Limitation (kg/kkg of Product) 30 Day Maximum
Flow, gal/ton	125		-	
Oil & Grease	45	15	0.023	0.0078
TSS	150	50	0.078	0.026
pH, Units	6.0 to 9.0		-	

TABLE II-2

MODEL FLOW, MODEL EFFLUENT QUALITY, AND EFFLUENT LIMITATIONS AND STANDARDS
CONTINUOUS CASTING SUBCATEGORY

Pollutant	Treatment Model Effluent Quality		BAT Effluent Limitations(2)		BCT Effluent Limitations(2)	
	Daily Maximum Concentration(1)	30 Day Average Concentration(1)	Daily Maximum Limitations	30 Day Average Limitations	Daily Maximum Limitations	30 Day Average Limitations
Flow, gal/ton	25		25			
pH, Units	6.0-9.0		-			
Oil & Grease	30	10	-	-	(RESERVED)	
TSS	70	25	-	-		
122 Lead	0.9	0.3	0.0000939	0.0000313		
128 Zinc	1.35	0.45	0.000141	0.0000469		

Pollutant	NSPS Effluent Standards(2)		PSES Effluent Standards(2)		PSNS Effluent Standards(2)	
	Daily Maximum Standards	30 Day Average Standards	Daily Maximum Standards	30 Day Average Standards	Daily Maximum Standards	30 Day Average Standards
Flow, gal/ton	25		25		25	
pH, Units	6.0-9.0		-		-	
Oil & Grease	0.00313	0.00104	-	-	-	-
TSS	0.00730	0.00261	-	-	-	-
122 Lead	0.0000939	0.0000313	0.0000939	0.0000313	0.0000939	0.0000313
128 Zinc	0.000141	0.0000469	0.000141	0.0000469	0.000141	0.0000469

(1) Concentrations are expressed in mg/l unless otherwise noted.
(2) Kg/kkg of product

CONTINUOUS CASTING SUBCATEGORY

SECTION III

INTRODUCTION

General Discussion

Steel producers have recognized for many years that continuous casting is more efficient than traditional methods to convert the molten steel into semi-finished products. The first U.S. patent for continuous casting was issued to Sir Henry Bessemer in 1865, but the mechanical and material problems associated with the development of equipment prevented the successful introduction of continuous casting to the steel industry. In 1943, Junghans started work which ultimately resulted in the successful continuous casting of steel. This work was followed by that of the Babcock and Wilcox Company in the United States in 1946; Gebr. Boehler, A. G. of Austria in 1947; Allegheny Ludlum Steel Company in the United States in 1949; and the Mannesmann Group of Germany in 1950. Since then, the continuous casting of steel has increased, and today considerable progress has been made in improving equipment and techniques.

The process continuously casts the molten steel produced in the steelmaking processes through water cooled copper molds to produce desired semi-finished products. Figure III-1 illustrates the process sequence for the manufacture of raw steel.

During the continuous casting process, as the semi-solidified (liquid center) steel emerges from the molds, water is sprayed onto the product for further cooling. This results in process wastewaters which require treatment prior to discharge. This report reviews the treatment alternatives for continuous casting wastewaters and presents the basis for the promulgated effluent limitations and standards.

Data Collection Activities

The Agency sampled seven continuous casting operations for this study to acquire process information and wastewater quality data. The previous regulation promulgated in 1974 was primarily based upon data obtained through field sampling at four continuous casting plants. Four additional plants were sampled during the recent plant survey. One plant, Plant AE, was resampled as Plant 075 during this survey. The casting plants that were sampled are listed in Table III-1.

In 1976, Data Collection Portfolios (DCPs) were sent to all fifty continuous casting facilities then operating in the United States. Each provided information regarding applied and discharge flow rates, treatment systems installed, shop capacities, and modes of operation. Table III-2 presents an inventory of continuous casting shops based

upon the DCP responses. In addition, plant visit data have been tabulated and summarized.

After the Agency received and reviewed the DCP responses, it sent detailed Data Collection Portfolios (D-DCPs) for nine casting shops to gather information on long term effluent quality, treatment costs, and on the continuous casting process itself. Table III-3 summarizes the data base for this report as derived from the above mentioned sources of information.

Description of Continuous Casting Operations

An integral part of the steelmaking process is the conversion of molten steel into a semi-finished product or shape that is suitable for further processing. Conventional practice is to: (1) teem (pour) the molten steel into iron ingot molds; (2) cool the ingots (3) strip the ingots out of the molds; (4) transfer the ingots to soaking pits for heat equalization; (5) heat the ingots to rolling temperatures; (6) and finally, roll the ingots into blooms, billets, or slabs. Continuous casting, on the other hand, is a process in which the molten steel is converted directly to blooms, billets, or slabs, eliminating the above steps, increasing productivity, and conserving energy.

In the continuous casting process, the hot molten steel is poured from the ladle into a refractory lined tundish. The tundish serves to maintain a constant head of molten metal. This is essential in providing a controlled casting rate. In addition, the tundish can distribute the molten steel to more than one casting strand in multiple strand operations (see Figure III-2). The molten metal from the tundish pours through nozzles into an oscillating water cooled copper mold, where partial solidification takes place. The copper molds oscillate to prevent the molten steel from sticking to the sides of the molds. Lubricants, such as rape seed oil, are sprayed into the molds to facilitate steel movement through the mold. As the metal solidifies in the mold, the cast product is withdrawn continuously. After passing through the water cooled molds, the partially solidified product passes into a secondary cooling zone, where sprays of water remove sufficient heat to complete solidification of the semi-finished product. The product then passes into the cut-off zone, where it is cut to the desired length. It is then placed on the run-out conveyor tables for transport to storage facilities.

The rate of casting product withdrawal is determined by the type of steel cast (i.e. alloy, carbon), and by the size and geometry of the section. Generally, bloom and billet continuous casters are multiple strand machines, whereas large slab casters are single strand, although double strands are also used. A withdrawal rate (casting speed) that is too rapid will cause molten steel breakouts in bloom and billet casting machines and will cause corner cracking in slab casting machines. Casting times, for a ladle of molten steel, are

generally about 60 minutes. Longer casting times cause the molten steel to lose too much heat, resulting in poor casting.

The casting machines also require a turn around time for routine maintenance. It normally takes 60 minutes to prepare machines (strands) for the next cast.

The three designs generally used for continuous casting machines, (vertical casting, vertical casting with bending rolls, and curved mold) are described below:

1. The vertical casting design was the first type of continuous caster used. In these casters the semi-finished product is maintained in a vertical position until after it has been cut to product length. Then the cut length is lowered into a tilting basket which rotates and discharges the product onto the run-out and cooling tables. Vertical casting machines require fairly tall building structures.

2. The vertical casting design with a bending roll casts the product vertically. However, after solidification, the semi-finished product is curved horizontally by bending rolls with a horizontal straightening mechanism. This design allows for lower building heights.

3. The curved mold design has a curved water cooled mold and a curved cooling chamber. A straightening mechanism is used on the semi-finished product as it is withdrawn from this mold. This design has the lowest building height requirements.

Bloom, billet, and slab casting machines are designed to cast several semi-finished product sizes. By this method, product size can be matched to the requirements of the subsequent rolling operations. Molds can be changed between casts. Stainless, low alloy, and other steel material specifications can be continuously cast. Withdrawal rates, cooling rates, and metal temperature are the governing factors for the casting machines.

Description of Pressure Casting

Pressure casting or pressure pouring is another method of casting semi-finished products from molten steel, but it is generally used for stainless steel or low-alloy steel slab production. Pressure casting is also of interest to carbon steel producers, because improved yield and surface finishes can be obtained with this process. However, other operational problems have made pressure casting less competitive. Pressure casting was originally developed for the production of steel wheels for railroad cars, but soon was adapted to the production of other semi-finished products.

The principal equipment used in pressure casting is:

1. Pressure tank
2. Ladle
3. Mold
4. Handling mechanism
5. Air compressor station

Molds are usually made by assembling rectangular blocks of graphite to form a cavity of the desired dimensions. The pressure casting operation involves placing the ladle of molten steel into a pressure chamber. The pressure chamber is then sealed with a special cover that is mounted with a ceramic pouring tube. The mold is moved into position, and a seal is made between the mold and pressure tank cover pouring tube. Pressurized air is introduced into the pressure chamber forcing the molten metal up into the cavity in the graphite molds. The pouring tube is then sealed with a plug and the pressure released from the chamber. The filled graphite mold is removed from the pressure chamber. The slab or bloom is held in the mold for sufficient time to complete solidification, after which the mold is opened, and the cast product is removed.

The size of the heat to be handled in a pressure casting shop is an important consideration, because a sufficient number of molds must be available to handle the entire heat within a reasonable pouring time (approximately one hour). The cost of molds generally accounts for about one half of the capital equipment cost.

The continuous casting and pressure casting processes are illustrated in Figures III-2 through III-4.

Although both processes cast molten steel to produce semi-finished products, pressure and continuous casting operations have different procedures and technologies to perform the casting operation. In view of this, the Agency believes that the pressure casting process may differ significantly from the continuous casting process. The Agency does not have sufficient data on pressure casting operations to develop appropriate effluent limitations and standards for those operations. Moreover, since there are only a few pressure casting operations, the Agency believes that limitations for those operations should be established on a case-by-case basis. For this reason, the Agency has not promulgated effluent limitations and standards for pressure casting operations at this time.

TABLE III-1

SUMMARY OF SAMPLED PLANTS
CONTINUOUS CASTING SUBCATEGORY

Sample Code	Plant Reference Code	Type of Caster	Steel Type
*AE	0584F	Slab	Carbon
AF	0868B	Slab	Carbon
D	0248B	Slab	Specialty
Q	0684E	-	Specialty
071	0284A	Slab	Specialty
072	0496	Slab	Carbon
*075	0584F	Slab	Carbon
079	0060K	Billet	Carbon

-: Inadequate response to the basic DCP.
*: This plant was sampled twice; once during the Original Guidelines Survey as Plant AE and once during the Toxic Pollutant Survey as Plant 075. The data gathered during the toxic survey is considered to be the most representative of plant operations and, therefore, is used instead of the original survey data.

TABLE III-2

GENERAL SUMMARY TABLE
CONTINUOUS CASTING

Plant Code	Casting Process	Type of Steel	Products Cast	# of Strands Per Machine	Plant Age	Prod. Ton/Day Rated Capacity	Prod. Ton/Day 1976 Prod.	Flows Gal/Ton Applied Flow	Flows Gal/Ton Discharge Flow	Process Treatment	Central Treatment	Operating Mode	Discharge Mode
0060	Cont.& Cont.-Cont.	CS-98 HSLA-2	Slabs	2	1972	3800	1812	-	-	PSP	FLL FL02,CL VF,CT	RTP 100	Zero Discharge
0060D	Cont.	ES-78, SS-22	Slabs	2	1970	1000	789	1678	554	None	FDS,PSP CL,CT,VF	RTP 67 BD 33	Direct
0060H	Cont.	CS-100	Billets	6	1964	1200	975	923	92	PSP,SSP, Scr, CT	None	RTP 90 BD 10	(POTW)
0060K	Cont. & Cont.-Cont.	CS-100	Billets	4	1968 1975	655	327	[2985]	[25]	PSP FF,CT	None	[RTP 99.2] [BD 0.8]	Direct
0068B	Cont.	CS-100	Billets	-	1975	880	360	6111	611	PSP	None	RUP 90 REU 10	Indirect
0076	Cont.	CS-100	Billets	3	1975	700	255(2)	1656	0	PSP	T,VF	RTP 100	Zero Discharge
0084A	Cont. & Cont.-Cont.	CS-100	Billets	3	1975	450	300(3)	-	-	PSP,SS	SSP,Scr, CT	RUP 100	Zero Discharge
0084A	Cont. & Cont.-Cont.	CS-100	Billets	2	1970	300	65(3)	-	-				
0112D	Cont.	CS-95, HSLA-5	Slabs	2	1976	4100	2840	6408	128	01,02,03	NA,01,02, NL,NW,FLP, CL,SS,T,SL VF	RTP 98 BD 2	Direct
0132	Cont.	CS-80, AS-20	-	3	1970	540	467	-	-	(PSP)	None	(RTP 100)	(Zero Discharge)

TABLE III-2
GENERAL SUMMARY TABLE
CONTINUOUS CASTING
PAGE 2

Plant Code	Casting Process	Type of Steel	Products Cast	# of Strands Per Machine	Plant Age	Prod. Ton/Day Rated Capacity	Prod. Ton/Day 1976 Prod.	Flows Gal/Ton Applied Flow	Flows Gal/Ton Discharge Flow	Process Treatment	Central Treatment	Operating Mode	Discharge Mode
0136B	Cont.	CS-96 HSLA-4	-	-	1967	576	501	-	-	(PSP)	None	(RTP 100)	(Zero Discharge)
0180	Cont. & Cont.-Cont.	CS-100	Billets	2	1970	400	329	4012	4.0	None	PSP,SL,SS	RTP 99.9 BD 0.1	POTW
0188C	Cont.-Cont.	CS-100	-	-	1976	1200	210	-	-	(PSP)	None	(RTP 100)	(Zero Discharge)
0196A	Cont. & Cont.-Cont.	-	Billets	6	1976	*	*	*	*	PSP,SS CT	None	RTP 89 BD 11	Direct
0204	Cont.	CS-100	Billets	4	1975	1000	853	2543	2543	None	None	REU 100	Indirect
0248B	Cont.	SS-99.9, other 0.1	Slabs	1	1972	1100	500	2000	0	PSP,SSP, SS,FDSP, Scr,CL	None	RTP 100	Zero Discharge
0284A	Cont.	SS-100	Slabs	1	1974	550	296	[564]	[0]	PSP, FSP,T,CT	None	[RTP 100]	Zero Discharge
(4)0316	Cont.	CS-100	-	2	1965	850	533	-	-	(PSP)	None	(RTP 100)	(Zero Discharge)
0316A	Cont. & Cont.-Cont.	CS-100	Billets	3	1970	900	383	-	-	(PSP)	None	(RTP 100)	(Zero Discharge)
0384A-1	Cont-Cont.	CS-64.8, HSLA-35.2	Billets and Blooms	4	1970	1370	1668	3281	16	PSP,SS, FDSP,CT	None	RTP 97.1(5) BD 0.5	Direct
0384A-2	Cont-Cont.	CS-100	Slabs	2	1972	4110	4422	7062	98	PSP,SS, FDSP,CT,CL	None	RTP 98.6 BD 1.4	Direct

TABLE III-2
GENERAL SUMMARY TABLE
CONTINUOUS CASTING
PAGE 3

Plant Code	Casting Process	Type of Steel	Products Cast	# of Strands Per Machine	Plant Age	Prod. Ton/Day Rated Capacity	Prod. Ton/Day 1976 Prod.	Flows Gal/Ton Applied Flow	Flows Gal/Ton Discharge Flow	Process Treatment	Central Treatment	Operating Mode	Discharge Mode
0432A	Cont.	CS-100	Billets	6	1969	1500	1000	(2552)	(0)	PSP,SSP, VF,SS	None	(RTP 100)	(Zero Discharge)
0444	Cont.	CS-99, Other-1	Billets	3	1974	500	326	4294	245	PSP,FDSP CL	None	RTP 94.3 BD 5.7	POTW
0456A	Cont.	CS-100	-	-	1970	600	192	-	-	(PSP)	None	(RTP 100)	(Zero Discharge)
0460A	Cont.	CS-100	Billets	6	1968	950	479	4509	1527	PSP,CT	None	RTP 66.2 BD 33.8	POTW
(6) 0468B	Cont. & Cont.-Cont.	CS-95, Other-5	Billets	4	1969 1970	1600	1403	927	128	PSP	SSP,CT, FDSP,SS	RTP 86 BD 14	Direct
(6) 0468F	Cont. & Cont.-Cont.	CS-100	Billets	4	1976	3450	801	2187	28	PSP	SL,SS,CT	RTP 98.7 BD 1.3	Direct
0476A	Cont. & Cont.-Cont.	CS-100	Blooms	6	1969	-	533	16,210	81	SL	FLP,Scr, SS,NL, CL,04	RTP 99.5 BD 0.5	Direct
0496	Cont.	CS-90, HSLA-10	Slabs	1	1971	1600	940	[1542]	[0]	None	PSP,FLP, FDSP,CLA, CT	[RTP 100]	Zero Discharge
0528A	Cont.-Cont.	CS-93, HSLA-7	Slabs	4	1968	6575	5609	4814	144	PSP,SSP, CT,FDSP	CL,FLP,SL, PSP,SSP,T, SS,NL,NA, EB,CO,Scr,	RTP 97 BD 3	Direct

TABLE III-2
GENERAL SUMMARY TABLE
CONTINUOUS CASTING
PAGE 4

Plant Code	Casting Process	Type of Steel	Products Cast	# of Strands Per Machine	Plant Age	Prod. Ton/Day Rated Capacity	Prod. Ton/Day 1976 Prod.	Flows Gal/Ton Applied Flow	Flows Gal/Ton Discharge Flow	Process Treatment	Central Treatment	Operating Mode	Discharge Mode
0548D	Cont.	CS-86, AS-14	Rounds	2	1974	600	253	3755	79	None	PSP,SS	RTP 97.9 BD 2.1	Direct
0584F	Cont.	CS-100	Slabs	4	1968	4118	3567	[3489]	[117]	PSP,FFP, CT	05,06, SL	[RTP 97] [BD 3]	Direct
0596	Cont.	CS-100	Billets	5	1973	800	434	5161	0	None	CY,FDSP SL	RTP 100	Zero Discharge
0608A	Cont.	CS-100	Billets	3	1976	600	500	2764	11	None	PSP,SSP Spray Cooling Pond	RTP 99.6 BD 0.4	Direct
0620A	Cont-Cont.	CS-99, AT-1	Billets	2	1969	900	864	22	0	None	SL,PSP, FDSP	RTP 100	Zero Discharge
0620B	Cont. & Cont.-Cont.	CS-100	Billets	2	1973	800	900	2000	24	None	PSP,SS, SSP,SL, CT,Scr 05,CLA,FLP	RTP 98.9 BD 1.1	Direct
0620C	Cont. & Cont.-Cont.	CS-90, HSLA-10	-	2	1975	1200	800	-	-	(PSP)	None	(RTP)	(Direct)
0652	Cont.	CS-90, HSLA-10	Slabs	2	1968	1440	851	1375	1375	None	PSP,Scr,SS, SL,FLA,FLP, NL,CLA	OT	Direct
(6) 0672A	Cont. & Cont.-Cont.	CS-100	Billets	2	1963	1152	622	547	0	PSP,SSP, NC,CT,Scr	None	RTP 100	Zero Discharge
0672B	Cont. & Cont.-Cont.	CS-100	-	-	1975	700	252	-	-	(PSP)	None	(RTP)	(Direct)

TABLE III-2
GENERAL SUMMARY TABLE
CONTINUOUS CASTING
PAGE 5

Plant Code	Casting Process	Type of Steel	Products Cast	# of Strands Per Machine	Plant Age	Prod. Ton/Day Rated Capacity	Prod. Ton/Day 1976 Prod.	Flows Gal/Ton Applied Flow	Flows Gal/Ton Discharge Flow	Process Treatment	Central Treatment	Operating Mode	Discharge Mode
0684E	Cont.	AS-84.6, CS-15.4	Billets	4	1969	1134	693	1375	49[9]	PSP,CT (FF)	FLL,FLP, FL01,CL,CT	RTP 96.5 BD 3.5	Direct
0684E	Cont.	SS-100	Slabs	-	1969	670	107						
[6]0696A	Cont.	CS-58, other-42	Billets	2	1964 1975	960	293	1341	66	PSP,CT	None	RTP 95.1 BD 4.9	POTW
0740A	Cont.	CS-100	Billets	2	1964	380	378	1415	1.2	None	Settling Pond,CT	RTP 99.9 BD 0.1	POTW
0764	Cont.	CS-100	-	-	1976	720	294	-	-	(PSP)	None	(RTP)	(Direct)
0780	Cont.	CS-100	Billets	2	1966	500	348	1934[9]	0	NA,PSP, CT	None	RTP 100	Zero Discharge
0780	Cont. & Cont.-Cont.	CS-100	Billets	3	1975	700	350						
0796A	Cont.	HSLA-94.8, CS-5.2	Blooms	4	1968	900	354	-	-	None	None	-	-
[7]0856F	Cont.	CS-100	Blooms	2	1973	1500	900[8]	1278[9]	1278[9]	PSP,SSP, SS	None	OT	Direct
0860B	Cont.-Cont.	CS-100	Slabs	1	1967	4156	4008	5489	5489	PSP,SS	None	OT	Direct
0860H	Cont.-Cont.	CS-96.4 HSLA, AT,ES-3.6	Billets	4	1971	2542	1605	5318	5318	PSP, SS,SSP	Scr,CL, FLA,FLP, VF,CT	RET 100	(POTW)

TABLE III-2
GENERAL SUMMARY TABLE
CONTINUOUS CASTING
PAGE 6

Plant Code	Casting Process	Type of Steel	Products Cast	# of Strands Per Machine	Plant Age	Prod.Ton/Day Rated Capacity	Prod.Ton/Day 1976 Prod.	Flows Gal/Ton Applied Flow	Flows Gal/Ton Discharge Flow	Process Treatment	Central Treatment	Operating Mode	Discharge Mode
0864C	Cont.	CS-70, AT-25, HSLA-5	Billets, Blooms	4	1968	820	368	-	571	PSP	SSP,SL, FLP,SS, CT	(Shutdown)	Direct
0868B	Cont.	CS-78.5, HSLA-21.5	Slabs	1	1971	1435	1395	8258	310	PSP,SS, FDSP,CT	-	RTP 96.2 BD 3.8	Direct
0946A	Cont.	CS-87, HSLA-13	-	8	1966	870	234(10)	-	-	None	None	(Shutdown)	-

TABLE III-2
GENERAL SUMMARY TABLE
CONTINUOUS CASTING
PAGE 7

(1) Percolation and evaporation.

(2) Production is for 1975 as there was no production in 1976.

(3) The DCP reported only total tonnage for the two casters. However, a split could be made based upon typical production which was reported separately for each caster.

(4) Data refers to two identical casters. Production reported is combined tonnage for the two casters.

(5) DCP reports 2.4% evaporation.

(6) Two machines located at this plant. Flow and tonnage data is combined for the two casters.

(7) Two identical machines.

(8) Typical production. Separate 1976 tonnage not available.

(9) Combined GPT for both machines.

(10) No production in 1976. Tonnage is for 1975.

- Inadequate response.
* Confidential information

NOTE: All data was derived from the basic questionnaire responses with the exception of data in brackets or parentheses. Data in brackets was derived from the plant sampling visit data. Data in parentheses represent treatment systems which were installed after 1/1/78.

KEY TO ABBREVIATIONS

The general abbreviation key is found in Table VII-1.
The abbreviations defined on this page apply to this summary table.

AS# : % alloy steel
AT# : % alloy tool
CS# : % carbon steel
ES# : % electrical steel
HSLA#: % high strength low alloy
SS# : % stainless steel

FLO1: flocculation with ferric chloride
FLO2: flocculation with ferric sulfate
01 : pH control
02 : biocide
03 : corrosion inhibitors
04 : mechanical aeration
05 : hydromation filters
06 : deep bed filters with walnut shells

TABLE III-3

CONTINUOUS CASTING DATA BASE

	No. of Plants	% of Total	Daily Capacity	% of Daily Capacity
Plants sampled for original survey	4	7.8	7214	9.9
Plants sampled for toxic survey	4 incl. 1 above	7.8 incl 2.0 above	6923 incl. 4118 above	9.5 incl. 5.7 above
Total plants sampled	7	13.7	10,019	13.8
Plants solicited via D-DCP	9 incl. 3 above	17.6 incl. 5.9 above	20,309 incl. 2,330 above	27.9 incl. 3.2 above
Plants sampled and/or solicited via D-DCP	14	27.4	28,678	39.5
Plants responding to DCP	51	100.0	72,691	100.0

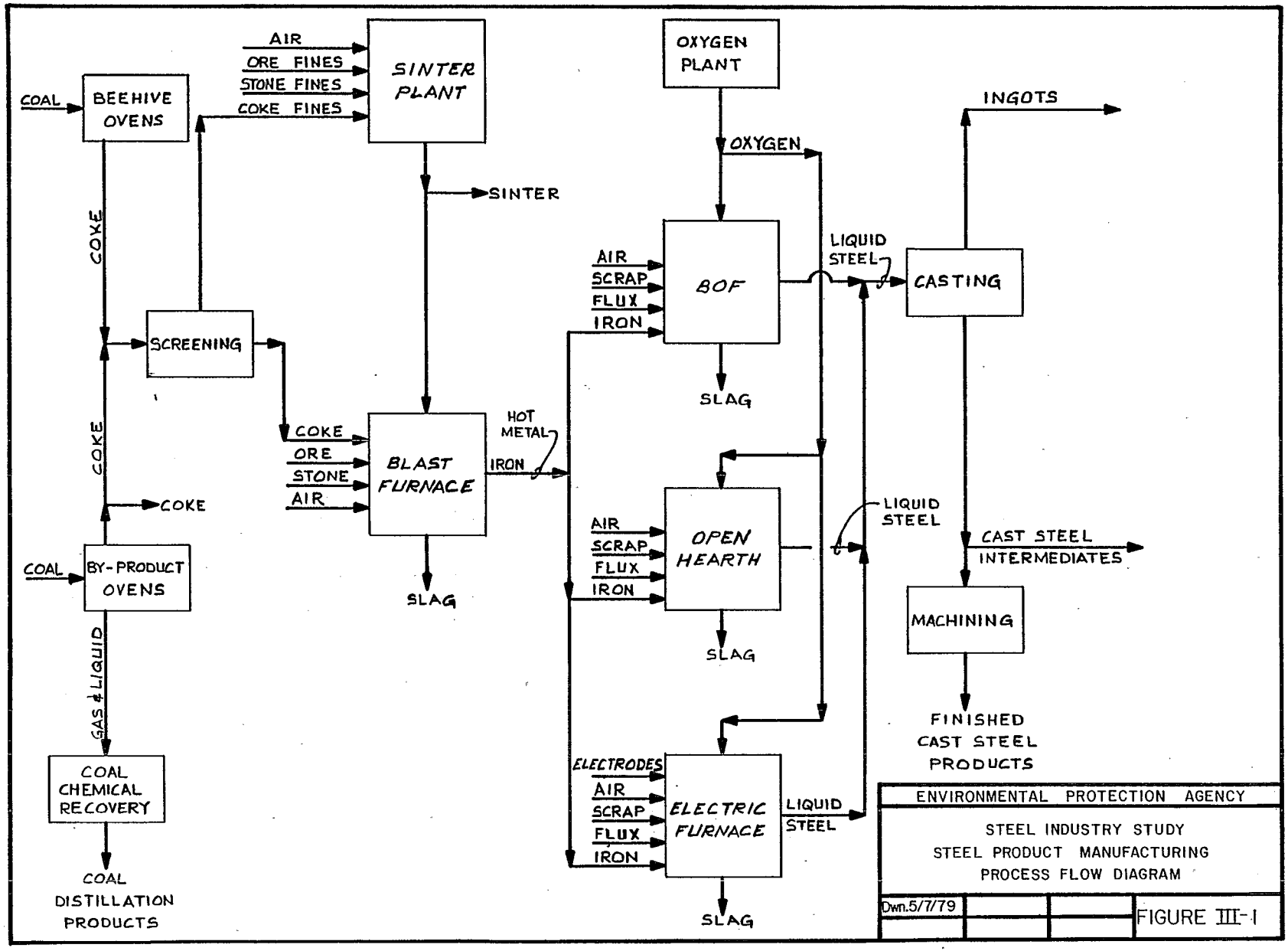
COAL
BEEHIVE OVENS
COKE
COKE
COKE
COAL
BY-PRODUCT OVENS
GAS & LIQUID
COAL CHEMICAL RECOVERY
COAL DISTILLATION PRODUCTS
AIR
ORE FINES
STONE FINES
COKE FINES
SINTER PLANT
SINTER
SCREENING
COKE
ORE
STONE
AIR
BLAST FURNACE
SLAG
HOT METAL
IRON
OXYGEN PLANT
OXYGEN
AIR
SCRAP
FLUX
IRON
BOF
SLAG
LIQUID STEEL
AIR
SCRAP
FLUX
IRON
OPEN HEARTH
SLAG
LIQUID STEEL
ELECTRODES
AIR
SCRAP
FLUX
IRON
ELECTRIC FURNACE
SLAG
LIQUID STEEL
CASTING
INGOTS
CAST STEEL INTERMEDIATES
MACHINING
FINISHED CAST STEEL PRODUCTS
ENVIRONMENTAL PROTECTION AGENCY
STEEL INDUSTRY STUDY
STEEL PRODUCT MANUFACTURING
PROCESS FLOW DIAGRAM
Dwn.5/7/79
FIGURE III-1

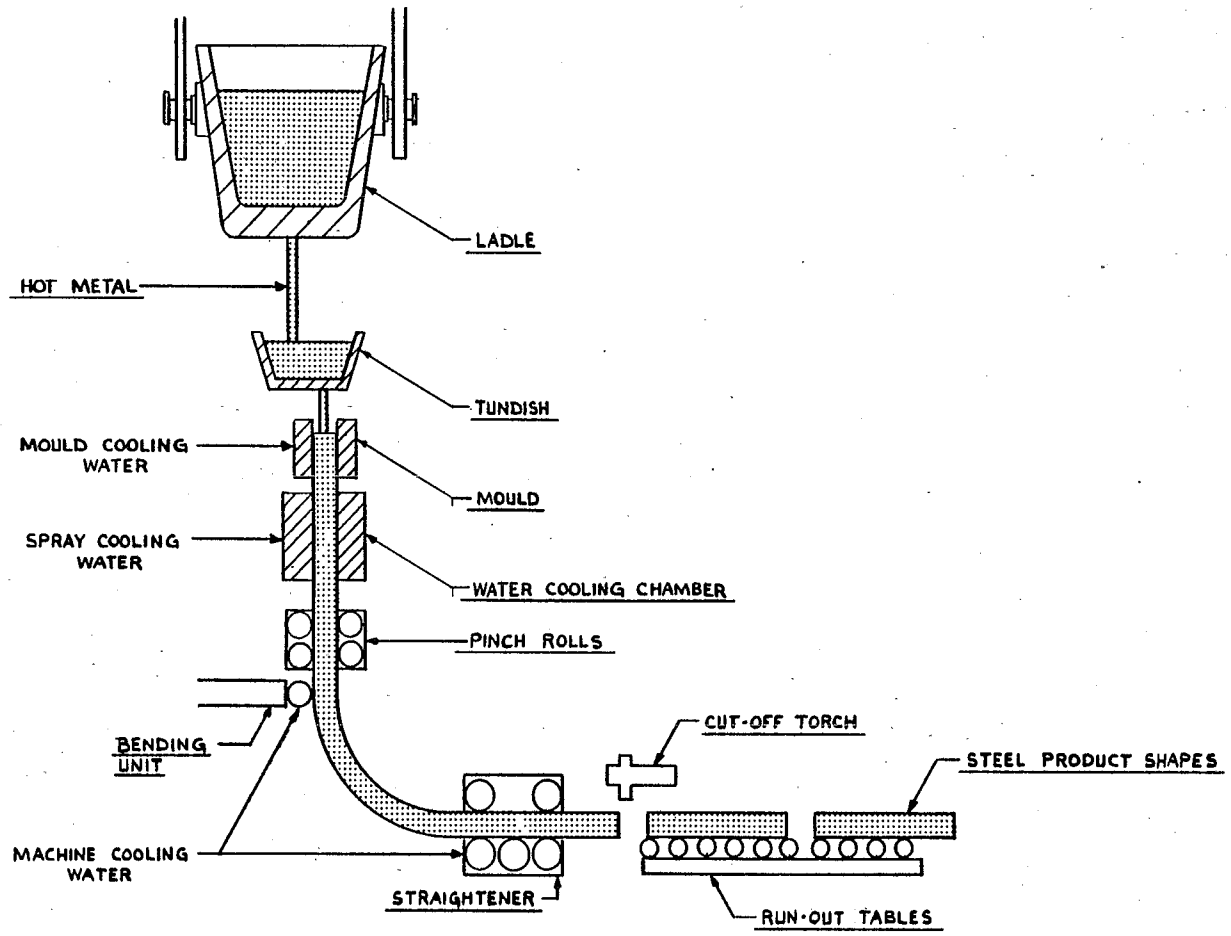

ENVIRONMENTAL PROTECTION AGENCY			
STEEL INDUSTRY STUDY CONTINUOUS CASTING PROCESS FLOW DIAGRAM			
RD 4/24/78			FIGURE III-2

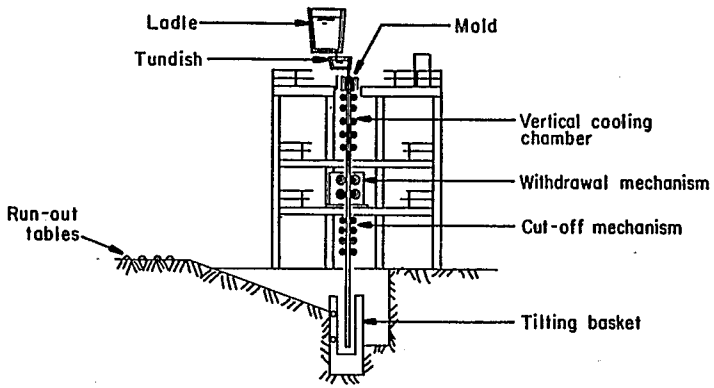

VERTICAL CASTING DESIGN

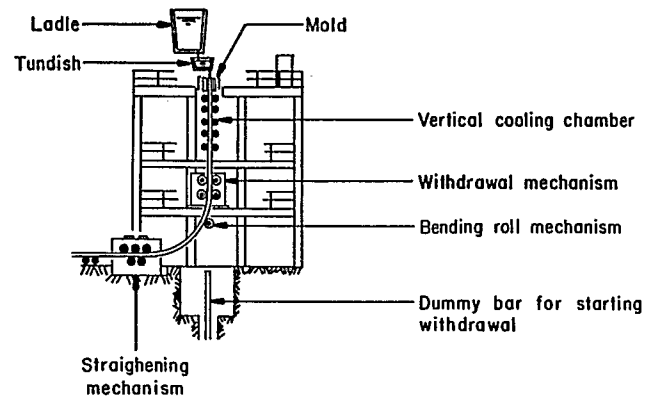

VERTICAL & BENDING ROLL DESIGN

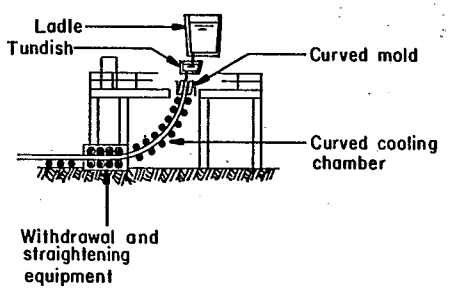

CURVED MOLD DESIGN

ENVIRONMENTAL PROTECTION AGENCY			
STEEL INDUSTRY STUDY CONTINUOUS CASTING PROCESS FLOW DIAGRAM			
Dwn. 2/23/79			FIGURE III-3

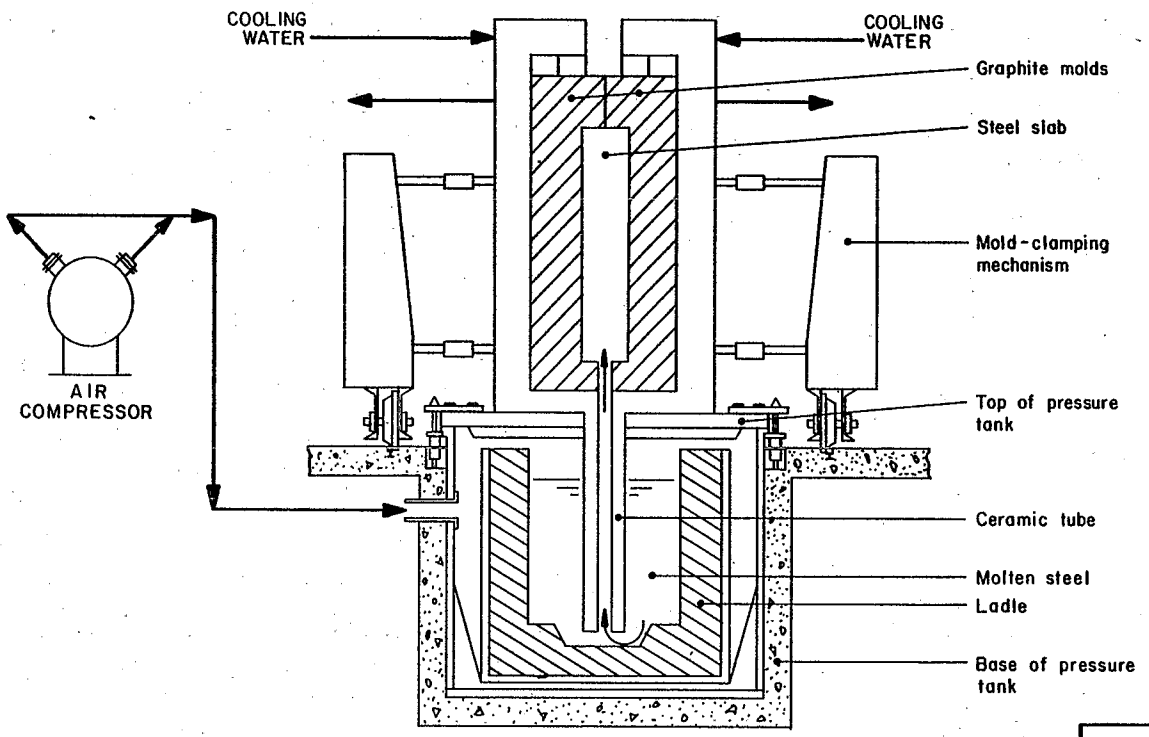

PRESSURE CASTING OF A SLAB

ENVIRONMENTAL PROTECTION AGENCY			
STEEL INDUSTRY STUDY PRESSURE CASTING PROCESS FLOW DIAGRAM			
Dwn. 2/23/79			FIGURE III-4

CONTINUOUS CASTING SUBCATEGORY

SECTION IV

SUBCATEGORIZATION

Introduction

The Agency examined several factors to determine if the continuous casting subcategory should be subdivided. Those factors include manufacturing processes and equipment, final products, raw materials, wastewater characteristics, wastewater treatability, size and age of facilities, geographic location, and process water usage and discharge rates. All were found to have no significant impact on subcategorization. The following discussion addresses each of these factors and confirms the continuous casting subcategorization.

Factors Considered in Subdivision

Manufacturing Process and Equipment

The continuous casting operation is a process in which molten steel is cast into a semi-finished product. Its particular process characteristics distinguish it from other steelmaking operations. However, the Agency concluded that further subdivision of the continuous casting subcategory is not warranted. The process and equipment is basically the same for all continuously cast products.

Differences among casters are found in the casting control parameters such as temperature, tundish nozzle pouring rates, withdrawal rates, cooling rates, and type of caster design. These parameters, however, do not significantly affect wastewater quantity or quality.

Final Products

Continuous casting operations produce a wide variety of semi-finished products, varying in material composition and geometric form. The basic process, though, of transforming molten steel to a semi-finished product is the same. Sampling data do not indicate any significant differences between carbon steel casters and specialty steel casters nor among billet, bloom, or slab casters. Consequently, the Agency concluded that further subdivision based upon final product is not appropriate.

Raw Materials

The Agency found that raw materials do not distinguish continuous casting facilities. The sampling data for specialty and carbon steel casters exhibit no appreciable differences in the type and nature of wastewaters produced. Sampling data are presented in Section VII.

Wastewater Characteristics

Although continuous caster wastewaters are distinguishable from those of the other steel industry subcategories, a review of sampling data indicates no discernible pattern or apparent division among casters, regardless of caster type or the type of steel cast. The Agency, therefore, concludes that it is not appropriate to further subdivide the subcategory on the basis of wastewater characteristics.

Wastewater Treatability

Continuous casting wastewater treatment does not vary appreciably from plant to plant. While the Agency observed differences in the concentrations of wastewater constituents, it also noted a common approach to wastewater treatment. The major treatment components used in these operations are gravity sedimentation, filters, and recycle systems. The Agency concludes that further subdivision based upon wastewater treatability considerations is not appropriate.

Size and Age of Facilities

The Agency considered the impact of size and age on subdivision of the continuous casting subcategory. It analyzed possible correlations relating the effects of age and size upon such elements as wastewater flows, wastewater characteristics, and the ability to retrofit treatment equipment to existing facilities. No relationships were found, and size and age were determined to have no impact upon subdivision.

There is no correlation between the size of a casting shop and any pertinent factor such as process water usage or wastewater characteristics. Figure IV-1 shows a plot of discharge flow rates (in gallons/ton) versus production capacity (in tons/day) for continuous casters. The size of the caster shop has no bearing upon the ability to recycle and subsequently attain a low discharge flow rate. A review of analytical data for sampled plants (presented in Section VII) does not show any relationship between size and the characteristics of the wastewater generated. Thus, the Agency concludes that further subdivision based upon the size of casting shops is not warranted.

"Age" was examined as a possible basis for subdivision as it relates to feasibility and cost of retrofit. The concept of age for a casting shop is not particularly important as the casting process is a relatively new development. The DCP data indicate the "oldest" caster now in operation was installed in 1955 with most being built in the 1960's. Accordingly, there is not much variation in the age of the various casting shops. A comparison was made, however, of age and process water usage in a similar manner as was performed for the size of a caster shop. Figure IV-1 also illustrates this comparison. As with the flow versus size plot, no relationship is evident. Thus, the age of a shop has no effect upon the ability to recycle process water and attain a low effluent discharge.

Further analysis indicates that the age of a caster shop in no way affects the quality or quantity of wastewaters generated. Older shops generate the same kind and amount of wastewaters as newer shops. In addition, the treatability of these wastewaters is the same.

The Agency also addressed the ability to retrofit water pollution control equipment as part of the age analysis. The ability to retrofit equipment has been demonstrated at several older plants as shown in Table IV-1. In addition, the Agency analyzed the cost of retrofit to determine whether older plants require greater capital expenditures than newer plants. The D-DCPs solicited this retrofit cost information, and of the nine plants surveyed, none reported any costs due to retrofit. While there were probably some retrofit costs in all cases where wastewater treatment facilities were added to existing casters, based upon the responses received to D-DCPs in this and other subcategories, EPA concludes that such costs are not significant.

Based upon the above, the Agency finds that both old and newer production facilities generate similar raw wastewater pollutant loadings; that pollution control facilities can be and have been retrofitted to both old and newer production facilities without substantial retrofit costs; that these pollution control facilities can and are achieving the same effluent quality; and, that further subcategorization or further segmentation within this subcategory on the basis of age or size is not appropriate.

Geographic Location

The location of continuous casting facilities has no apparent impact upon subdivision. The Agency analyzed the relationship between plant location and pertinent factors such as process water use and wastewater characteristics. No discernible pattern was revealed. Most of the plants are located east of the Mississippi River. Six are located in Texas, four in California, and one each in Oklahoma, Colorado, and Oregon. One caster is located in the arid west and requires the use of only minimal quantities of water from a local river. Consideration was given to the consumptive use of water, since the model treatment systems involve the use of evaporative cooling towers. However, the effects due to the consumptive use of water are minimal. As a result, the Agency concludes that further subdivision on the basis of geographic location is not appropriate.

Process Water Usage and Discharge Rates

The Agency examined process water usage and discharge rates as a possible factor of subdivision. Table IV-2 presents flow averages and ranges for those plants which supplied flow data. Data were compiled according to the type of steel cast, the type of product cast, the number of strands, and the type of caster. Although the data tend to indicate that specialty casters use less water, the Agency concludes that similar effluent flow rates for carbon and specialty casters can be achieved by all casters if the recycle technology is used.

Therefore, the Agency concludes that further subdivision based upon process water usage or discharge rates is not appropriate.

TABLE IV-1

EXAMPLES OF PLANTS THAT HAVE DEMONSTRATED THE ABILITY TO RETROFIT POLLUTION CONTROL EQUIPMENT CONTINUOUS CASTING

Plant Code	Mill Age Year	Treatment Age Year
0284A	1974	1974, 1976
0132	1970	after 1977
0136B	1967	after 1977
0188C	1976	after 1977
0316	1965	after 1977
0316A	1970	after 1977
0432A	1969	1974
0456A	1970	after 1977
0476A	1969	1977
0584F	1968	1970, 1973
0620C	1975	after 1977
0652	1968	1971, 1973
0672B	1975	after 1977
0764	1976	after 1977

TABLE IV-2

APPLIED AND DISCHARGE FLOW RATES
CONTINUOUS CASTING

	No. of Casters Reporting Data	Range		Average	
		Applied GPT	Discharge GPT	Applied GPT	Discharge GPT
Type of Steel					
Carbon	46	22-16210	0-5489	3646	617
Specialty	5	564-2000	0-554	1409	151
Type of Product					
Slabs	13	564-8258	0-5489	3716	689
Billets	27	22-6111	0-5318	2558	476
Blooms	5	1278-16210	16-1278	6923	487
Rounds	1	3755	79	3755	79
Number of Strands					
1	5	564-8258	0-5489	3642	1160
2	17	22-7062	0-1375	2525	277
3	7	1656-4294	0-245	2662	64
4	11	927-5318	16-5318	3015	894
5	1	5161	0	5161	0
6	5	923-16210	56-1527	5028	373
Type of Caster					
Continuous	31	564-8258	0-2543	2931	401
Continuous-Continuous	6	22-7062	0-5489	4331	1844
Continuous and Continuous-Continuous	15	547-16210	0-128	3537	44

FIGURE IV–1
CONTINUOUS CASTING SUBCATEGORY

DISCHARGE FLOW VS PRODUCTION CAPACITY

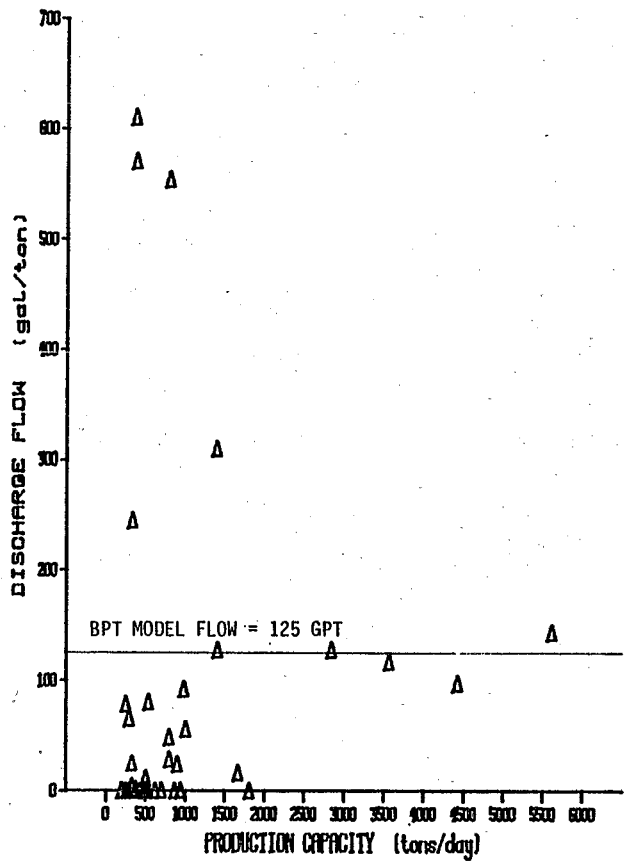

DISCHARGE FLOW VS AGE

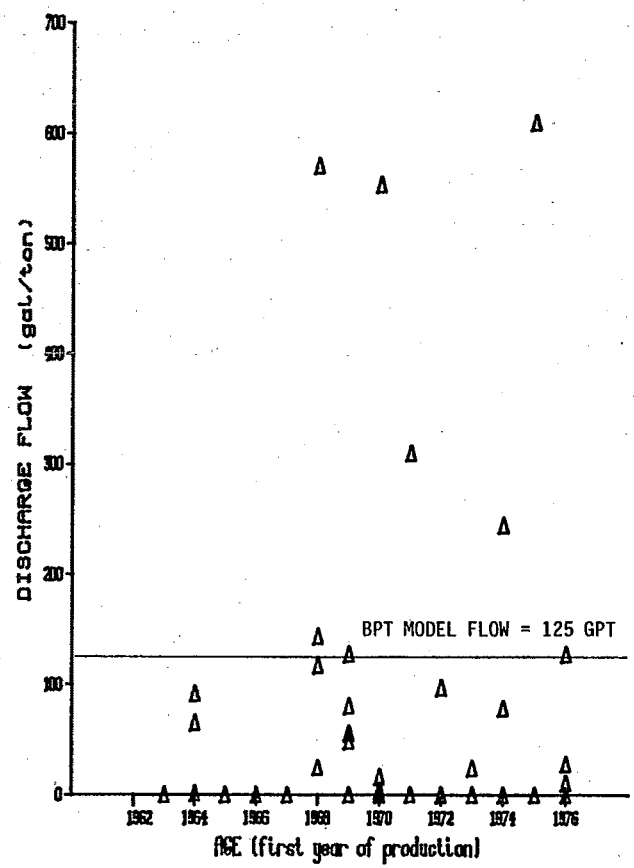

CONTINUOUS CASTING SUBCATEGORY

SECTION V

WATER USE AND WASTEWATER CHARACTERIZATION

Introduction

Process water use and characterization of the wastewaters generated by the continuous casting process are the principal considerations in determining pollutant loads, developing treatment alternatives, and estimating costs. This section describes the water originating from the process. The wastewater system description is limited to those streams which come into contact with raw material, products, or by-products associated with the process. This excludes the various noncontact cooling water systems that are used in the continuous casting process. Wastewater characterization is based upon analytical data obtained during field sampling surveys.

Water Use

The continuous casting process has three main plant water systems.

1. Copper mold noncontact cooling water system
2. Machinery noncontact cooling water system
3. Cast product spray contact cooling water system

Only the cast product spray contact cooling water is subject to this regulation as the other two systems use noncontact cooling water only. However, leaks of cooling water into the process water system would be treated with the process water.

The cast product is only partially solidified when it emerges from the molds. The interior core of the product is still molten steel at that time. The cast product cooling water system sprays water directly onto the product for further cooling. As the cast product surface oxidizes, scale is washed away by the cooling water. The spray water also becomes contaminated with oils and greases which are released by the hydraulic and lubrication systems. As the cast product is discharged on to the run-out tables for final cooling, additional scale flakes off and drops beneath the tables. Sometimes this scale is sluiced to the spray cooling water pit.

Approximately 5-10% of the water sprayed on the product is evaporated with the balance discharged to a scale pit. Temperatures of discharged spray waters range from 54° to 60°C (130° to 140°F). Other minor wastewater systems include spray cooling of cast product, acetylene torch cut-off, and miscellaneous cooling or sluicing.

A common industry practice is to recycle the process wastewater. Table IX-2 is a list of the plants for which flow and recycle rate

data were received. As shown, wastewaters are recycled at the vast majority of plants at rates exceeding ninety percent. Several plants report no discharge of process wastewater from continuous casting operations.

Wastewater Characterization

The continuous casting process produces scale and oils and greases as a result of the spray cooling process. Withdrawal and guide rolls guide the cast product through the solidification stage. Since the cast product is hot, the surface oxidizes and the resulting scale is washed out with the spray cooling water. Additional scale flakes off when the cast product is discharged onto the caster run-out tables. Hydraulic and lubrication systems add oils and greases to the wastewaters.

The raw wastewater discharges from the carbon and specialty steel continuous casters are similar in waste characterization with regard to the previously limited pollutants, suspended solids, oil and grease, and pH. Tables V-1 and V-2 present raw wastewater flow and quality data for the plants sampled. The wastewater pollutant concentration data represent the contribution of pollutants from the casting process. Data for Plant AE, sampled during the original guidelines survey, are not presented, since this operation was resampled as Plant 075 during the toxic pollutant survey. The toxic pollutant survey data are more complete and more representative of current plant operations.

The analytical data presented in Table V-2 show the type and quantity of toxic organic and toxic metal pollutants which have been found in continuous casting wastewaters. Section VI deals more specifically with the selection of pollutants, in terms of regulation, monitoring, and the origin of these pollutants.

TABLE V-1

SUMMARY OF ANALYTICAL DATA FROM SAMPLED PLANTS
ORIGINAL GUIDELINES SURVEY
CONTINUOUS CASTING

Net Concentration of Pollutants in Raw Wastewater

Reference Code	0868B	0684E	Average
Plant Code	AF	Q	
Sample Point(s)	7-9	16	
Flow, gal/ton	1475	-	1475
	mg/l	mg/l	mg/l
Suspended Solids	89	126	108
Oil and Grease	22	16.3	19
pH (Units)	6.6	8.9	6.6-8.9
Chromium	NA	0.060	0.060
Copper	0.12	0.020	0.070
Lead	-	NA	-
Zinc	1.0	0.040	0.52

- : Calculation yielded a negative result.
NA: Not analyzed

NOTE: Plant B, a pressure slab caster, is not addressed here as it was scheduled for shutdown in September of 1980.
Raw wastewater data for Plant D was unobtainable during sampling.

TABLE V-2

SUMMARY OF ANALYTICAL DATA FROM SAMPLED PLANTS
TOXIC POLLUTANT SURVEY
CONTINUOUS CASTING

Net Concentration of Pollutants in Raw Wastewater

Reference Code		0284A	0496	0584F	0060K	Toxic Survey Average	Overall[1] Average
Plant Code		071	072	075	079		
Sample Point(s)		B-C	F-E	I+K-J-A	C-B-E		
Flow, gal/ton		564	1542	3489	2985	2145	2011
		mg/l	mg/l	mg/l	mg/l	mg/l	mg/l
	Total Suspended Solids	-	16.5	-	11	6.9	40
	Oil & Grease	3.8	19	3.6	4	7.6	11.5
	pH (Units)	9.2-9.4	7.4-8.1	7.0-9.2	7.0-7.9	7.0-9.4	6.6-9.4
022	Parachlorometacresol	0.11	-	0.000017	0.005	0.029	0.029
023	Chloroform	0.009	-	0.017	-	0.0065	0.0065
034	2,4-Dimethylphenol	0.025	ND	ND	ND	0.0062	0.0062
039	Fluoranthene	ND	ND	ND	0.023	0.0058	0.0058
068	Di-n-butyl phthalate	ND	0.006	-	0.039	0.011	0.011
069	Di-n-octyl phthalate	0.02	ND	0.016	-	0.009	0.009
086	Toluene	ND	-	0.016	ND	0.004	0.004
119	Chromium	-	-	0.009	-	0.0022	0.013
120	Copper	0.015	-	-	-	0.0038	0.027
122	Lead	-	-	0.006	-	0.0015	0.0012
125	Selenium	0.22	-	ND	NA	0.073	0.073
128	Zinc	-	-	-	-	-	0.17

- : Calculation yielded a negative result.
ND: Not detected
NA: Not analyzed

(1) Overall averages include the values presented on Table V-1.

CONTINUOUS CASTING SUBCATEGORY

SECTION VI

WASTEWATER POLLUTANTS

Introduction

This section describes the rationale for selecting those pollutants for which effluent limitations and standards have been promulgated for continuous casting operations.

Final selection of those pollutants was based upon an analysis of wastewater samples collected during plant visits. This list of pollutants was confirmed and augmented through extensive field sampling that included analysis for toxic pollutants.

Conventional Pollutants

The previously limited pollutants, suspended solids, oil and grease, and pH, were chosen based upon the nature of the raw materials and equipment used in the casting process. Suspended solids was chosen because a large quantity of scale is generated by the casting process and carried out by the spray cooling waters. When scale comes into contact with cooling water, the particulates are transferred to the wastewater. The suspended solids concentration indicates the degree to which the process wastewater has been contaminated. Toxic metals are often entrained with solids suspended in the wastewater. The removal of suspended solids often results in removal of toxic metals.

The Agency selected oil and grease for limitation, because it is often found in caster wastewaters. Lubrication is a necessary part of the continuous casting process. Oil spills, line breaks, excessive application of lubricants, and equipment washdown all contribute to the presence of oil and grease in continuous casting wastewaters.

Finally, the Agency chose pH, a measure of the acidity or alkalinity of a wastewater, because of the environmentally detrimental effects which can result from extremes in pH. In addition, corrosion and scaling conditions, which foul or damage process or treatment equipment, can be caused by extreme pH levels. The pH of continuous casting process wastewaters typically falls within the range of 6.0 to 9.0 standard units.

Toxic Pollutants

This study was also directed at evaluating toxic pollutant discharges. The toxic pollutants analyzed during the verification sampling phase of the project included those pollutants which were classified by the Agency as "known to be present." This determination was made as a result of industry responses to the DCPs and analyses performed during

the screening phase. Table VI-1 lists those toxic pollutants for which analyses were performed. A final toxic pollutant list was compiled by including all pollutants which were detected in the raw wastewater at an average concentration of 0.010 mg/l or greater. This list is presented in Table VI-2 for the continuous casting subcategory and includes the previously discussed limited pollutants. The pollutants listed in Table VI-2 are considered to be those which are most representative and indicative of casting operations, and they are addressed accordingly throughout this report.

Toxic metal pollutants originate in the molten steels which are cast. These metals find their way into the wastewaters through the scale particulates which are washed from the cast product. Three organic pollutants, parachlorometacresol, di-n-butyl phthalate, and di-n-octyl phthalate, were also detected in caster wastewaters at significant levels. The phthalate compounds, however, are not believed to be characteristic of the casting process. Evidence developed during the sampling inspections indicates that their presence is probably related to plasticizers in the tubing used for the automatic collection of wastewater samples. With respect to parachlorometacresol, it appears in concentrations that, aside from recycle, are below treatable levels. For these reasons, the Agency has not promulgated effluent limitations and standards for this pollutant. The Agency believes that this pollutant does not tend to concentrate in recycle systems. Although the concentrations of these pollutants in recycle system blowdowns will be approximately the same as in the discharge from once-through systems, the mass loadings of these pollutants will be reduced proportionately to the degree of recycle. Accordingly, with the high degree of recycle incorporated in the BAT, NSPS, PSES, and PSNS technologies, the Agency believes that compliance with the effluent limitations and standards for conventional and toxic metal pollutants will indicate a comparable reduction in the discharge of those toxic organic pollutants that may be present in continuous casting wastewaters.

TABLE VI-1

TOXIC POLLUTANTS KNOWN TO BE PRESENT
CONTINUOUS CASTING

Toxic Pollutant Numeric Designation	Pollutant
22	Parachlorometacresol
23	Chloroform
34	2,4-Dimethylphenol
39	Fluoranthene
68(1)	Di-n-butyl phthalate
69(1)	Di-n-octyl phthalate
86	Toluene
119	Chromium
120	Copper
122	Lead
125	Selenium
128	Zinc

(1) Appearance of this pollutant in continuous casting wastewater is believed to be due to plasticizers found in sampling equipment.

TABLE VI-2

SELECTED POLLUTANTS
CONTINUOUS CASTING

	Total Suspended Solids
	Oil and Grease
	pH
119	Chromium
120	Copper
122	Lead
125	Selenium
128	Zinc

CONTINUOUS CASTING SUBCATEGORY

SECTION VII

CONTROL AND TREATMENT TECHNOLOGY

Introduction

The Agency established the BPT, BAT, PSES, PSNS, and NSPS alternative treatment systems after determining the current level of treatment in the industry. The various treatment technologies were then formulated as "add-ons" to this primary level of treatment. Control and treatment technologies available for the various levels of treatment are discussed in this section. The Agency has promulgated effluent limitations and standards for these levels of treatment based upon an evaluation of the effluent monitoring data obtained during plant visits and treatment capabilities demonstrated in this and other subcategories. Treatment system summaries, schematics, and wastewater monitoring data for the visited plants are also presented in this section.

Summary of Treatment Practices Currently Employed

As noted earlier, the wastewater produced by the continuous casting process primarily results from the spray water system which brings cooling water into contact with the hot semi-finished product.

The basic treatment systems used at continuous casting plants include primary settling devices, which are often scale pits equipped with drag link conveyors and oil removal facilities. The scale pit overflow is often treated in settling lagoons, filters, or clarifiers. The treated water is then recycled through cooling towers with a small blowdown discharged. (About 35 percent of the industry reports no discharge and recycle of 100% of the wastewater.) Cooling towers are used to reduce the process water temperature prior to recycle. Chemical flocculation systems are provided with clarifiers to aid in the settling of solids. Clarifier underflows are then dewatered by vacuum filters or centrifuges.

Several different types of filters are used. Flat bed filters, with disposable filter belts, or deep bed filters are often used. The deep bed filters require backwashing to clean the filter media. Flat bed filters use a media which is disposed of along with the solids filtered. The deep bed filters discharge backwash waters to sludge tanks. Filtered solids are then disposed of in landfills. The capital cost of flat bed filters is approximately 1/3 that of deep bed filters. In addition, flat bed filters do not require the backwashing and other equipment necessary to operate deep bed filters effectively. Four casting plants presently use flat bed filters. Thirteen plants have deep bed filters. Nine of these plants use central treatment systems. In these cases, the deep bed filters treat other wastewaters

in addition to continuous casting wastewaters. Filtration of the continuous casting discharge will remove toxic metals entrained in the suspended solids, as those metals are in particulate form rather than in a dissolved state.

Table III-2 presents the treatment technologies and modes of operation for all caster plants.

Control and Treatment
Technologies Considered for Toxic Pollutant Removal

The detection of toxic metals in continuous casting wastewaters required the consideration of additional treatment for BAT, NSPS, PSES, and PSNS. The blowdown treatment technologies selected for review are deep bed filtration, lime precipitation and sedimentation, and vapor compression distillation. Consideration was also given to the use of sulfide precipitation as an alternate technology. This was ultimately deleted because of the limited benefits that it might achieve over lime precipitation. A brief discussion of these technologies follows.

A. Filtration

Filtration is generally used to further reduce the discharge of suspended solids. However, filtration can also be used to control those toxic pollutants which are entrained with the suspended solids. Particulate pollutant removal is accomplished by passing the wastewater stream, either under pressure or by gravity, through a filter media. The filter media, generally sand, anthracite coal and/or garnet, permits water to pass through but prevents the passage of much of the particulate matter suspended in the wastewater. The filter media itself may be comprised of a single type and size of media, various sizes of the same type of media, or a mixed media which contains several types and sizes of media. As indicated above, filtration is used at continuous casting operations. Flat bed filters which are commonly used are, however, much less effective than the multimedia filters described here.

B. Lime Precipitation and Sedimentation

Lime addition, followed by sedimentation, is used to further reduce the levels of particulate and dissolved toxic metals. This additional removal results from the formation of metal hydroxide precipitates which are subsequently removed in inclined plate separators. Inclined plate separators are gravity sedimentation devices in which the effective settling area is much larger than the area actually occupied by this equipment. This technology is well demonstrated in this industry.

C. Vapor Compression Distillation

Vapor compression distillation is a process by which zero discharge can be achieved. In this process the wastewater is evaporated

concentrating the constituents in the wastewater to slurry consistency. The steam distillate is recondensed and recycled back to the production process for reuse. The slurry discharge can be dried in a mechanical drier or allowed to crystallize in a small solar or steam-heated pond prior to final disposal. One desirable feature of the process is its relative freedom from scaling. Because of the unique design of the system, calcium sulfate and silicate crystals grow in solution as opposed to depositing on heat transfer surfaces. Economic operation of the system requires a high calcium to sodium ratio (hard water).

Summary of Sampling Visit Data

The Agency visited seven continuous casting facilities during the overall study. Four of these plants were visted for the original study, and four were surveyed during the latter toxic pollutant study. Four of the seven plants are carbon steel casters, and three are specialty steel casters. One plant was sampled twice; as Plant AE for the original study and as Plant 075 for the toxic pollutant study. This plant is addressed as Plant 075, since the data obtained during the second study are considered to be more representative of present operations.

Table VII-1 provides a legend for the various control and treatment technology abbreviations used throughout this report. Tables VII-2 and VII-3 present the raw and effluent wastewater loads for the above mentioned continuous casting plants. Figures VII-1 through VII-7 are wastewater treatment schematics of the plants sampled. A brief description of the treatment practices and facilities at each of the sampled plants follows.

Plant AF (0868B) - Figure VII-1

Wastewater from the continuous caster at this plant is treated together with vacuum degassing wastewater. Treatment consists of a scale pit with oil skimming, high flow rate pressure filters, a cooling tower, and a recycle pump system. Blowdown is less then 2 percent of the applied flow. Deep bed filters are used with the backwash waters being discharged to the caster scale pit.

Plant D (0248B) - Figure VII-2

Caster wastewater is first settled in a clarifier. The clarifier underflow is batch discharged to the river, while the overflow is pumped through a filter and then recycled to the process.

Plant Q (0684E) - Figure VII-3

Caster sprays are discharged to a collection sump for settling and then pumped to a cooling tower. Water is recycled from the cooling tower to the process. There is no discharge from this system.

Plant 071 (0284A) - Figure VII-4

This plant has a scale pit and pressure sand filters to remove suspended solids from the caster machine spray waters. Filter backwash is discharged to a sludge concentrator. Sludge is hauled away by a contractor, and the concentrator overflow is returned to the scale pit. Filtered water is recycled to the caster sprays after passing through a cooling tower. There is no discharge from this system.

Plant 072 (0496) - Figure VII-5

This plant has a central treatment system for vacuum degassing and continuous casting wastewaters. Caster wastewater is discharged to a scale pit which receives degasser wastewater as well. The wastewater is then recirculated through a cooling tower to pressure sand filters. Backwash waters are discharged to the scale pit, which overflows to a large lagoon or reservoir. Filter effluent is passed through another cooling tower and finally recycled to the process. Aside from filter backwash, this system achieves zero discharge, since all of the wastewaters are recirculated.

Plant 075 (0584F) - Figure VII-6

Plant 075 was originally sampled in 1974 as Plant AE. Modifications to the treatment system caused the revisit. Caster wastewater is first pumped to primary scale pits. Some water is recycled to the process from there, but most of it is passed through flat bed filters. A blowdown from the filters is discharged to lagoons. The filter effluent is recirculated through a cooling tower and then pumped to walnut shell deep bed filters. The backwash is discharged to the lagoons, as the filter effluent is recycled to the caster sprays. Recycle is approximately 97 percent of the process flow.

Plant 079 (0060K) - Figure VII-7

This plant uses flat bed filters and recycle with 0.8% blowdown to a scale pit, which serves as a final settling pond. Filtered water is recycled to the caster after passing through a cooling tower.

Effect of Make-up Water Quality

Where the mass loading of a limited pollutant in the make-up water to a process is small in relation to the raw waste loading of that pollutant, the impact of make-up water quality on wastewater treatment system performance is not significant, and, in many cases, not measurable. In these instances, the Agency has determined that the respective effluent limitations and standards should be developed and applied on a gross basis.

As shown in Table VII-4, the effect of make-up water quality for continuous casting operations is not significant when compared to the raw waste loadings for the limited pollutants. The pollutants in the

intake water supply do not exceed 5 percent of the pollutants in the raw wastewaters. Thus, the Agency has determined the effluent limitations and standards should be applied on a gross basis, except to the extent allowed by 40 CFR 122.63(h).

TABLE VII-1

OPERATING MODES, CONTROL AND TREATMENT TECHNOLOGIES AND DISPOSAL METHODS

Symbols

A. Operating Modes

1. OT — Once-Through

2. Rt,s,n — Recycle, where t = type waste
s = stream recycled
n = % recycled

t: U = Untreated
T = Treated

s		n
P	Process Wastewater	% of raw waste flow
F	Flume Only	% of raw waste flow
S	Flume and Sprays	% of raw waste flow
FC	Final Cooler	% of FC flow
BC	Barometric Cond.	% of BC flow
VS	Abs. Vent Scrub.	% of VS flow
FH	Fume Hood Scrub.	% of FH flow

3. REt,n — Reuse, where t = type
n = % of raw waste flow

t: U = before treatment
T = after treatment

4. BDn — Blowdown, where n = discharge as % of raw waste flow

B. Control Technology

10. DI — Deionization

11. SR — Spray/Fog Rinse

12. CC — Countercurrent Rinse

13. DR — Drag-out Recovery

C. Disposal Methods

20. H — Haul Off-Site

21. DW — Deep Well Injection

TABLE VII-1
OPERATING MODES, CONTROL AND TREATMENT
TECHNOLOGIES AND DISPOSAL METHODS
PAGE 2

C. Disposal Methods (cont.)

22.	Qt,d	Coke Quenching, where t = type d = discharge as % of makeup t: DW = Dirty Water CW = Clean Water
23.	EME	Evaporation, Multiple Effect
24.	ES	Evaporation on Slag
25.	EVC	Evaporation, Vapor Compression Distillation

D. Treatment Technology

30.	SC	Segregated Collection
31.	E	Equalization/Blending
32.	Scr	Screening
33.	OB	Oil Collecting Baffle
34.	SS	Surface Skimming (oil, etc.)
35.	PSP	Primary Scale Pit
36.	SSP	Secondary Scale Pit
37.	EB	Emulsion Breaking
38.	A	Acidification
39.	AO	Air Oxidation
40.	GF	Gas Flotation
41.	M	Mixing
42.	Nt	Neutralization, where t = type t: L = Lime C = Caustic A = Acid W = Wastes O = Other, footnote

TABLE VII-1
OPERATING MODES, CONTROL AND TREATMENT
TECHNOLOGIES AND DISPOSAL METHODS
PAGE 3

D. Treatment Technology (cont.)

43. FLt — Flocculation, where t = type

t: L = Lime
A = Alum
P = Polymer
M = Magnetic
O = Other, footnote

44. CY — Cyclone/Centrifuge/Classifier

44a. DT — Drag Tank

45. CL — Clarifier

46. T — Thickener

47. TP — Tube/Plate Settler

48. SLn — Settling Lagoon, where n = days of retention time

49. BL — Bottom Liner

50. VF — Vacuum Filtration (of e.g., CL, T> or TP underflows)

51. Ft,m,h — Filtration, where t = type
m = media
h = head

t	m	h
D = Deep Bed	S = Sand	G = Gravity
F = Flat Bed	O = Other, footnote	P = Pressure

52. CLt — Chlorination, where t = type

t: A = Alkaline
B = Breakpoint

53. CO — Chemical Oxidation (other than CLA or CLB)

TABLE VII-1
OPERATING MODES, CONTROL AND TREATMENT
TECHNOLOGIES AND DISPOSAL METHODS
PAGE 4

D. Treatment Technology (cont.)

54. BOt — Biological Oxidation, where t = type

t: An = Activated Sludge
n = No. of Stages
T = Trickling Filter
B = Biodisc
O = Other, footnote

55. CR — Chemical Reduction (e.g., chromium)

56. DP — Dephenolizer

57. ASt — Ammonia Stripping, where t = type

t: F = Free
L = Lime
C = Caustic

58. APt — Ammonia Product, where t = type

t: S = Sulfate
N = Nitric Acid
A = Anhydrous
P = Phosphate
H = Hydroxide
O = Other, footnote

59. DSt — Desulfurization, where t = type

t: Q = Qualifying
N = Nonqualifying

60. CT — Cooling Tower

61. AR — Acid Regeneration

62. AU — Acid Recovery and Reuse

63. ACt — Activated Carbon, where t = type

t: P = Powdered
G = Granular

64. IX — Ion Exchange

65. RO — Reverse Osmosis

66. D — Distillation

TABLE VII-1
OPERATING MODES, CONTROL AND TREATMENT
TECHNOLOGIES AND DISPOSAL METHODS
PAGE 5

D. Treatment Technology (cont.)

67.	AA1	Activated Alumina
68.	OZ	Ozonation
69.	UV	Ultraviolet Radiation
70.	CNTt,n	Central Treatment, where t = type n = process flow as % of total flow t: 1 = Same Subcats. 2 = Similar Subcats. 3 = Synergistic Subcats. 4 = Cooling Water 5 = Incompatible Subcats.
71.	On	Other, where n = Footnote number
72.	SB	Settling Basin
73.	AE	Aeration
74.	PS	Precipitation with Sulfide

TABLE VII-2

SUMMARY OF ANALYTICAL DATA FROM SAMPLED PLANTS
ORIGINAL GUIDELINES SURVEY
CONTINUOUS CASTING

Raw Wastewaters

Reference Code	0868B		0248B		0684E		Average	
Plant Code	AF		D		Q			
Sample Point	7		(1)		16			
Flow (gal/ton)	1475		*		(2)		1475	
	mg/1	lbs/1000 lbs	mg/1	lbs/1000 lbs	mg/1	lbs/1000 lbs	mg/1	lbs/1000 lbs
Suspended Solids	111	0.683	*	*	126	*	118.5	0.683
Oil and Grease	22.5	0.138	*	*	16.3	*	19.4	0.138
pH (Units)	6.6		*		8.9		6.6-8.9	
Chromium	*	*	*	*	0.060	*	0.060	*
Copper	0.37	0.0023	*	*	0.020	*	0.195	0.0023
Lead	0.15	0.00092	*	*	*	*	0.15	0.00092
Zinc	2.6	0.016	*	*	0.040	*	1.32	0.016

Effluents

Reference Code	0868B		0248B		0684E	
Plant Code	AF		D		Q	
Sample Point	9		*		16	
Flow (gal/ton)	17		0		0	
C&TT	PSP,SS,FDSP,CT,RTP98.8,BD1.2		CL,FP,RTP100		PSP,CT,RTP100	
	mg/1	lbs/1000 lbs	mg/1	lbs/1000 lbs	mg/1	lbs/1000 lbs
Suspended Solids	22	0.0016	*	0	126	0
Oil and Grease	0.5	0.000035	*	0	16.3	0
pH (Units)	6.8		*		8.9	
Chromium	*	*	*	0	0.060	0
Copper	0.25	0.000018	*	0	0.020	0
Lead	0.43	0.000030	*	0	*	0
Zinc	1.6	0.00011	*	0	0.040	0

* Insufficient data.

(1) Raw wastewater data for this plant was unobtainable during sampling.
(2) Flow value (gal/ton) could not be calculated due to insufficient tonnage information.

TABLE VII-3

SUMMARY OF ANALYTICAL DATA FROM SAMPLED PLANTS
TOXIC POLLUTANT SURVEY
CONTINUOUS CASTING

Raw Wastewater

Reference Code	0284A		0496		0584F		0060K		Average		Overall Average	
Plant Code	071		072		075		079		2145		2011	
Sample Point	B		F		I(1)		C					
Flow (gal/ton)	564		1542		3489		2985					
	mg/l	lbs/1000 lbs	mg/l	lbs/1000 lbs	mg/l	lbs/1000 lbs	mg/l	lbs/1000 lbs	mg/l	lbs/1000 lbs	mg/l	lbs/1000 lbs
Suspended Solids	6.3	0.015	36	0.23	13	0.19	48	0.60	26	0.26	57	0.34
Oil & Grease	10	0.024	26	0.17	17	0.25	39	0.49	23	0.23	22	0.21
pH (Units)	9.2		7.4-7.9		7.9-8.3		7.0-7.2		7.0-9.2		6.6-9.2	
Chromium	1.00	0.0024	0.0080	0.000051	2.00	0.029	0.023	0.00029	0.76	0.0079	0.62	0.0079
Copper	0.087	0.00020	0.020	0.00013	0.012	0.00017	0.16	0.0020	0.070	0.00062	0.11	0.00096
Lead	0.10	0.00024	0.070	0.00045	<0.24	0	0.070	0.00087	0.060	0.00039	0.079	0.00050
Selenium	0.22	0.00052	0.010	0.000064	0.0007	0.000010	*	*	0.077	0.00020	0.077	0.00020
Zinc	0.20	0.00047	0.30	0.0019	0.74	0.011	0.20	0.0025	0.36	0.0040	0.68	0.0064

TABLE VII-3
SUMMARY OF ANALYTICAL DATA FROM SAMPLED PLANTS
TOXIC POLLUTANT SURVEY
CONTINUOUS CASTING
PAGE 2

	Effluents							
Reference Code	0284A		0496		0584F		0060K	
Plant Code	071		072		075		079	
Sample Point	C		E		J(2)(3)		B(4)(5)	
Flow (gal/ton)	0		0		117		25	
C&TT	PSP,FSP,T,CT,RTP100		PSP,FDSP,CT,RTP100		PSP,FFP,CT,RTP97		PSP,FF,CT,RTP99.2	
	mg/l	lbs/1000 lbs	mg/l	lbs/1000 lbs	mg/l	lbs/1000 lbs	mg/l	lbs/1000 lbs
Suspended Solids	8	0	16	0	15	0.098	37	0.0050
Oil & Grease	6	0	6	0	18	0.061	35	0.0041
pH (Units)	9.4		7.6-8.1		7.4-7.7		7.1-7.2	
Chromium	1.00	0	0.026	0	2.00	0.00098	0.033	0.0000024
Copper	0.070	0	0.21	0	0.015	0.000036	0.17	0.000017
Lead	0.10	0	0.060	0	<0.06	0.00013	0.11	0.0000073
Selenium	0.005	0	0.010	0	0.001	0.0000007	*	*
Zinc	0.200	0	0.33	0	0.967	0.0010	0.23	0.000021

* : No analysis.
ND: Not detected.

(1) Raw wastewater quality is after primary settling and partial recycle.
(2) The concentrations shown are for the filter effluent (sample point J).
(3) The lbs/1000 lbs shown are the total pounds leaving the system as a result of the filter effluent, J, and the filter backwash, K.
(4) The concentrations shown are for the filter effluent (sample point B).
(5) The lbs/1000 lbs shown are the actual pounds leaving the system by way of the caster pit.

NOTE: Refer to Table VII-1 for C&TT Codes definitions.

TABLE VII-4

NET CONCENTRATION AND LOAD ANALYSIS
CONTINUOUS CASTING SUBCATEGORY

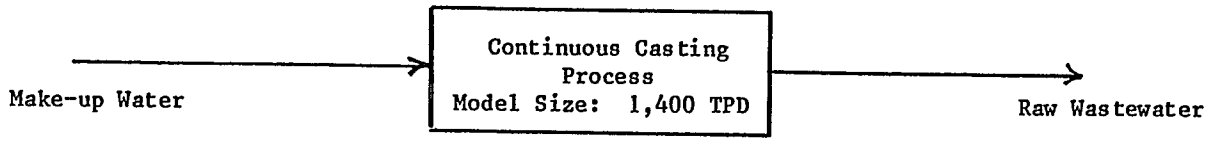

125 GPT x 1,400 TPD = 175,000 GPD

3,400 GPT x 1,400 TPD = 4,760,000 GPD

Regulated Pollutants	Make-up Conc. (mg/l) Min.	Make-up Conc. (mg/l) Max.	Make-up Conc. (mg/l) Avg.	Make-up Avg. Load (lbs/day)	Raw Waste Avg. Conc. (mg/l)	Raw Waste Avg. Load (lbs/day)	Make-up as a % of Raw Waste Load
Oil & Grease	<1.0	8.0	3.6	5.25	25	992.5	0.53
Total Suspended Solids	<1.0	144	66	96.33	60	2,382	4.04
122 Lead	<0.020	0.10	0.052	0.076	0.080	3.18	2.39
128 Zinc	0.10	0.80	0.18	0.26	0.70	27.79	0.94

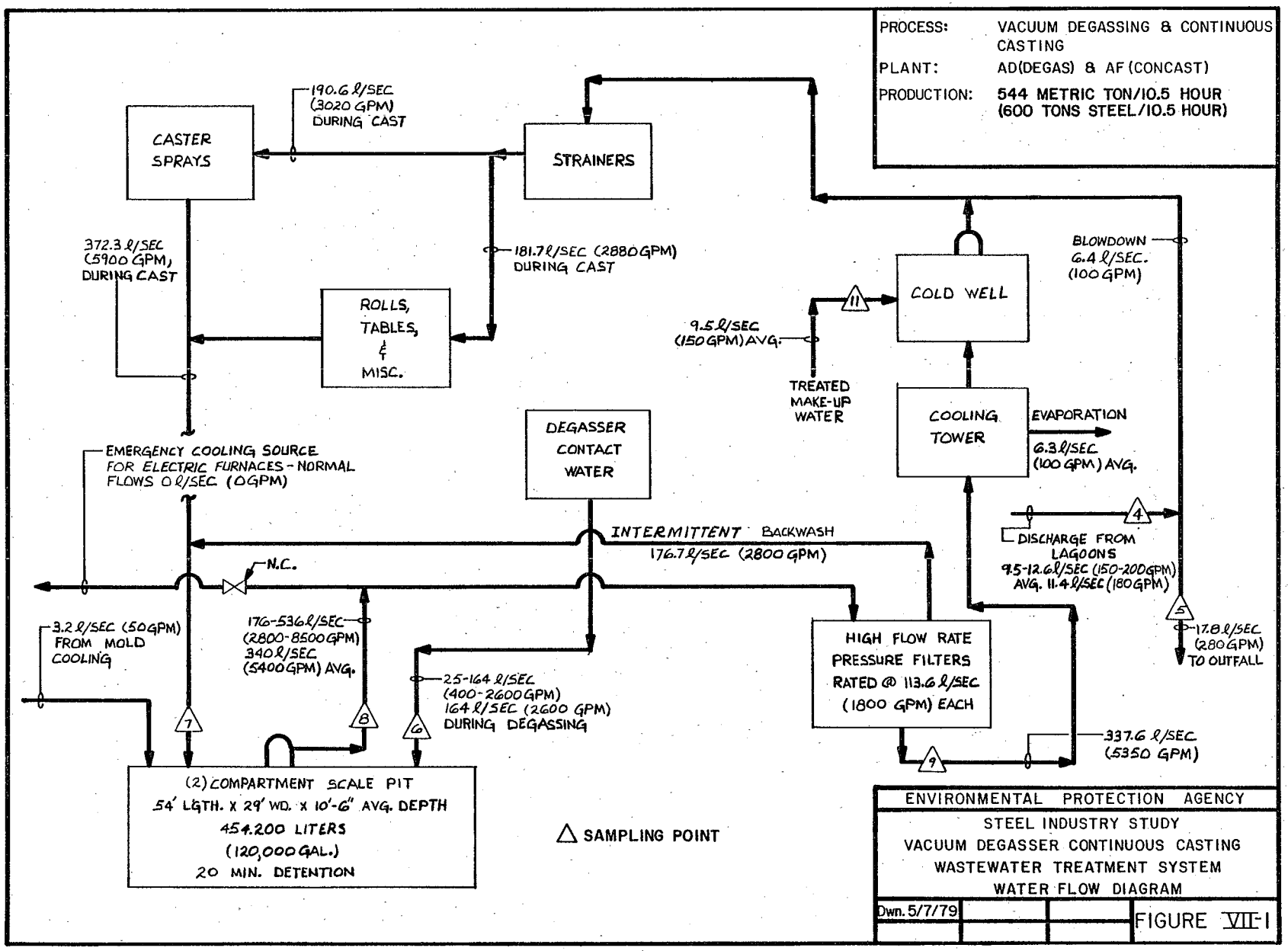
PROCESS: VACUUM DEGASSING & CONTINUOUS CASTING
PLANT: AD(DEGAS) & AF(CONCAST)
PRODUCTION: 544 METRIC TON/10.5 HOUR (600 TONS STEEL/10.5 HOUR)
CASTER SPRAYS
190.6 ℓ/SEC (3020 GPM) DURING CAST
STRAINERS
372.3 ℓ/SEC (5900 GPM) DURING CAST
181.7 ℓ/SEC (2880 GPM) DURING CAST
ROLLS, TABLES, & MISC.
BLOWDOWN 6.4 ℓ/SEC. (100 GPM)
COLD WELL
9.5 ℓ/SEC (150 GPM) AVG.
TREATED MAKE-UP WATER
COOLING TOWER
EVAPORATION 6.3 ℓ/SEC (100 GPM) AVG.
DEGASSER CONTACT WATER
EMERGENCY COOLING SOURCE FOR ELECTRIC FURNACES - NORMAL FLOWS 0 ℓ/SEC (0 GPM)
INTERMITTENT BACKWASH 176.7 ℓ/SEC (2800 GPM)
N.C.
DISCHARGE FROM LAGOONS 9.5-12.6 ℓ/SEC (150-200 GPM) AVG. 11.4 ℓ/SEC (180 GPM)
3.2 ℓ/SEC (50 GPM) FROM MOLD COOLING
176-536 ℓ/SEC (2800-8500 GPM) 340 ℓ/SEC (5400 GPM) AVG.
25-164 ℓ/SEC (400-2600 GPM) 164 ℓ/SEC (2600 GPM) DURING DEGASSING
HIGH FLOW RATE PRESSURE FILTERS RATED @ 113.6 ℓ/SEC (1800 GPM) EACH
17.8 ℓ/SEC (280 GPM) TO OUTFALL
337.6 ℓ/SEC (5350 GPM)
(2) COMPARTMENT SCALE PIT
54' LGTH. X 29' WD. X 10'-6" AVG. DEPTH
454,200 LITERS
(120,000 GAL.)
20 MIN. DETENTION
△ SAMPLING POINT
ENVIRONMENTAL PROTECTION AGENCY
STEEL INDUSTRY STUDY
VACUUM DEGASSER CONTINUOUS CASTING
WASTEWATER TREATMENT SYSTEM
WATER FLOW DIAGRAM
Dwn. 5/7/79
FIGURE VII-1

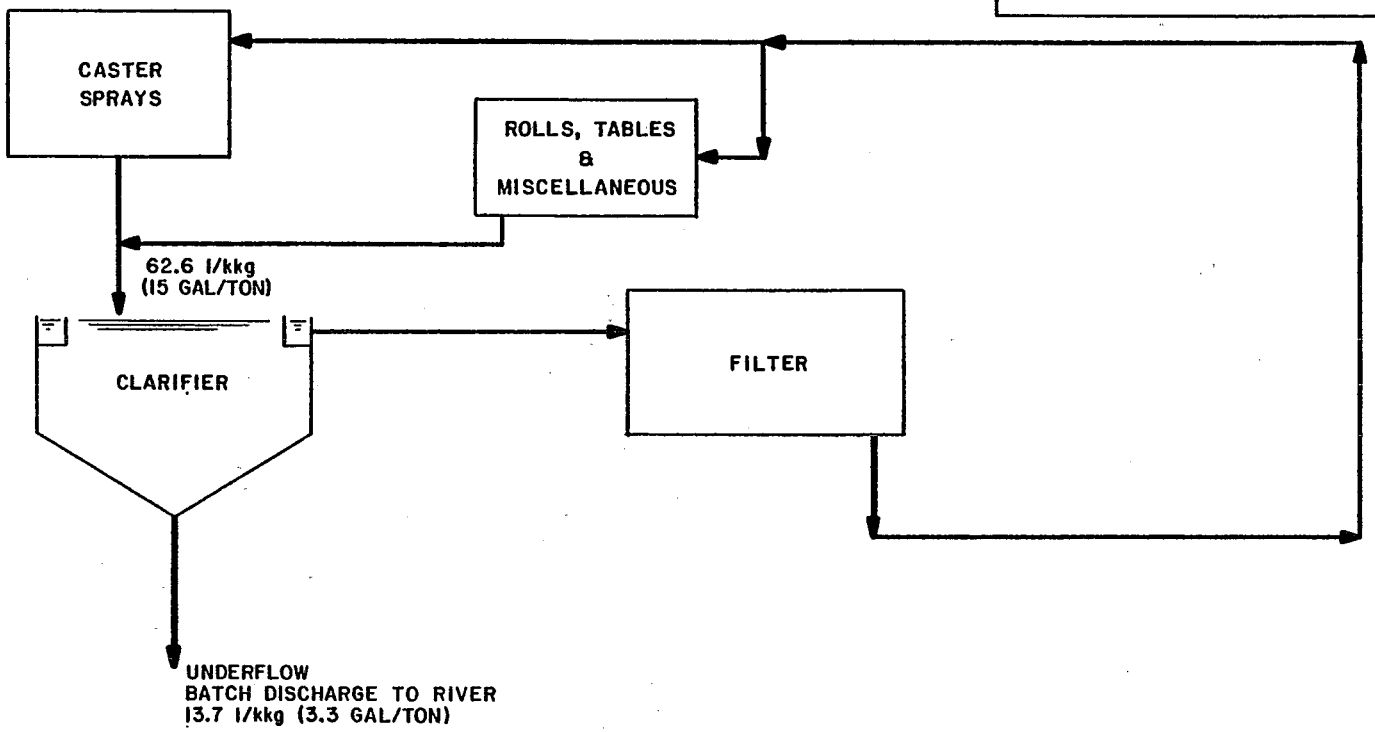

PROCESS: CONTINUOUS CASTING

PLANT: D

PRODUCTION:

ENVIRONMENTAL PROTECTION AGENCY
STEEL INDUSTRY STUDY
CONTINUOUS CASTING
WASTEWATER TREATMENT SYSTEM
WATER FLOW DIAGRAM

DWN.2/22/79

FIGURE VII-2

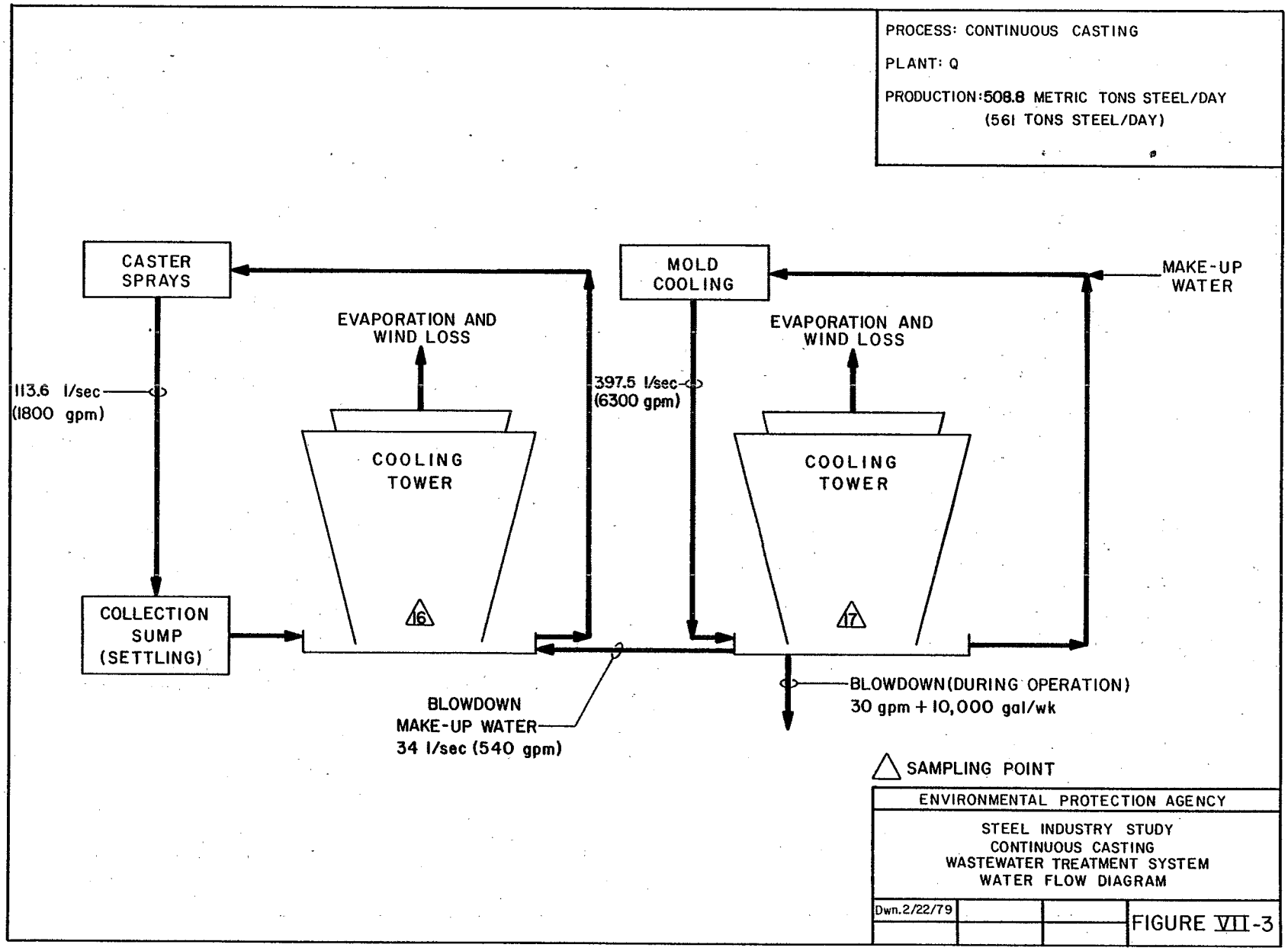
PROCESS: CONTINUOUS CASTING
PLANT: Q
PRODUCTION: 508.8 METRIC TONS STEEL/DAY
(561 TONS STEEL/DAY)
CASTER SPRAYS
MOLD COOLING
MAKE-UP WATER
EVAPORATION AND WIND LOSS
EVAPORATION AND WIND LOSS
113.6 l/sec
(1800 gpm)
397.5 l/sec
(6300 gpm)
COOLING TOWER
COOLING TOWER
16
17
COLLECTION SUMP (SETTLING)
BLOWDOWN MAKE-UP WATER
34 l/sec (540 gpm)
BLOWDOWN (DURING OPERATION)
30 gpm + 10,000 gal/wk
SAMPLING POINT
ENVIRONMENTAL PROTECTION AGENCY
STEEL INDUSTRY STUDY
CONTINUOUS CASTING
WASTEWATER TREATMENT SYSTEM
WATER FLOW DIAGRAM
Dwn. 2/22/79
FIGURE VII-3

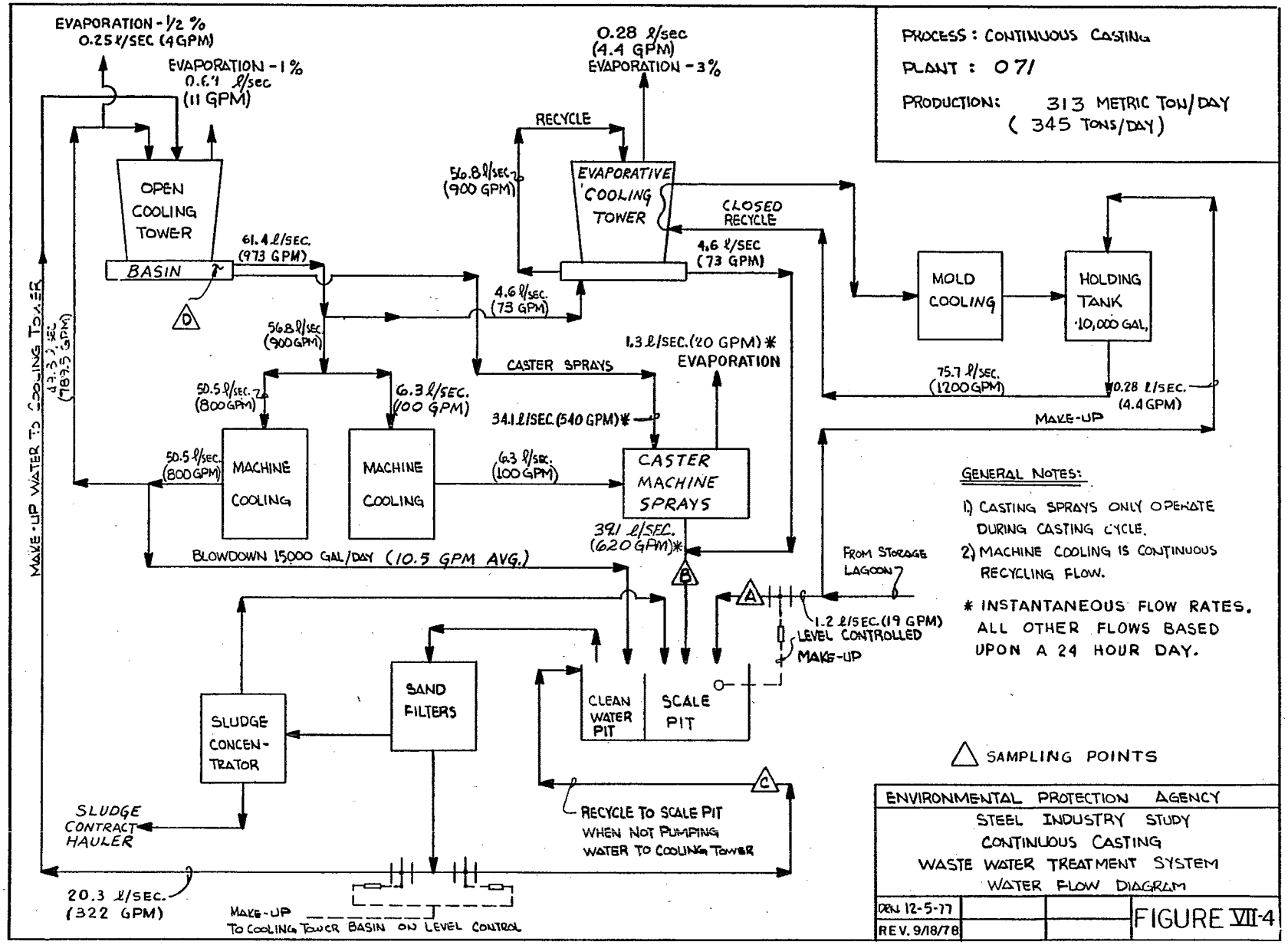
PROCESS: CONTINUOUS CASTING
PLANT: 071
PRODUCTION: 313 METRIC TON/DAY (345 TONS/DAY)
EVAPORATION - 1/2 %
0.25 ℓ/SEC (4 GPM)
EVAPORATION - 1 %
0.69 ℓ/sec (11 GPM)
0.28 ℓ/sec (4.4 GPM)
EVAPORATION - 3%
RECYCLE
56.8 ℓ/sec (900 GPM)
EVAPORATIVE COOLING TOWER
CLOSED RECYCLE
OPEN COOLING TOWER
BASIN
61.4 ℓ/SEC. (973 GPM)
4.6 ℓ/SEC (73 GPM)
4.6 ℓ/sec. (73 GPM)
MOLD COOLING
HOLDING TANK (10,000 GAL.)
56.8 ℓ/sec (900 GPM)
1.3 ℓ/SEC. (20 GPM) *
EVAPORATION
CASTER SPRAYS
75.7 ℓ/sec. (1200 GPM)
0.28 ℓ/SEC. (4.4 GPM)
MAKE-UP
50.5 ℓ/sec. (800 GPM)
6.3 ℓ/SEC. (100 GPM)
34.1 ℓ/SEC. (540 GPM) *
MAKE-UP WATER TO COOLING TOWER
49.3 ℓ/sec (789.5 GPM)
50.5 ℓ/sec. (800 GPM)
MACHINE COOLING
MACHINE COOLING
6.3 ℓ/sec. (100 GPM)
CASTER MACHINE SPRAYS
39.1 ℓ/SEC. (620 GPM) *
BLOWDOWN 15,000 GAL/DAY (10.5 GPM AVG.)
FROM STORAGE LAGOON
1.2 ℓ/SEC. (19 GPM) LEVEL CONTROLLED MAKE-UP
SAND FILTERS
CLEAN WATER PIT
SCALE PIT
SLUDGE CONCENTRATOR
SLUDGE CONTRACT HAULER
RECYCLE TO SCALE PIT WHEN NOT PUMPING WATER TO COOLING TOWER
20.3 ℓ/SEC. (322 GPM)
MAKE-UP TO COOLING TOWER BASIN ON LEVEL CONTROL
GENERAL NOTES:
1) CASTING SPRAYS ONLY OPERATE DURING CASTING CYCLE.
2) MACHINE COOLING IS CONTINUOUS RECYCLING FLOW.
* INSTANTANEOUS FLOW RATES. ALL OTHER FLOWS BASED UPON A 24 HOUR DAY.
SAMPLING POINTS
ENVIRONMENTAL PROTECTION AGENCY
STEEL INDUSTRY STUDY
CONTINUOUS CASTING
WASTE WATER TREATMENT SYSTEM
WATER FLOW DIAGRAM
DRN. 12-5-77
REV. 9/18/78
FIGURE VII-4

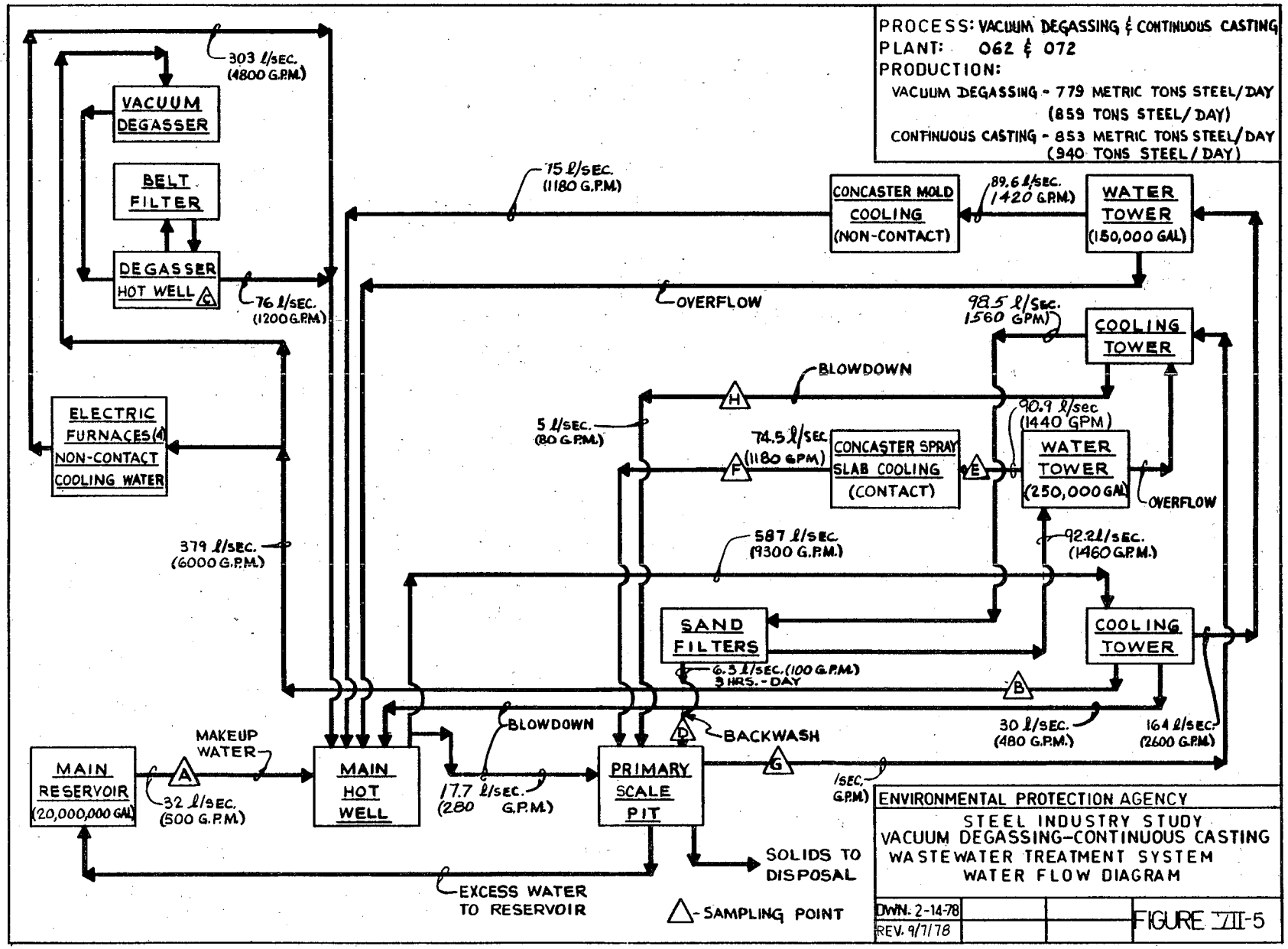
PROCESS: VACUUM DEGASSING & CONTINUOUS CASTING
PLANT: 062 & 072
PRODUCTION:
VACUUM DEGASSING - 779 METRIC TONS STEEL/DAY (859 TONS STEEL/DAY)
CONTINUOUS CASTING - 853 METRIC TONS STEEL/DAY (940 TONS STEEL/DAY)
303 l/SEC. (4800 G.P.M.)
VACUUM DEGASSER
BELT FILTER
DEGASSER HOT WELL
G
76 l/SEC. (1200 G.P.M.)
75 l/SEC. (1180 G.P.M.)
CONCASTER MOLD COOLING (NON-CONTACT)
89.6 l/SEC. (1420 G.P.M.)
WATER TOWER (150,000 GAL)
OVERFLOW
98.5 l/SEC. (1560 GPM)
COOLING TOWER
BLOWDOWN
H
5 l/SEC. (80 G.P.M.)
90.9 l/sec (1440 GPM)
74.5 l/SEC (1180 GPM)
F
CONCASTER SPRAY SLAB COOLING (CONTACT)
E
WATER TOWER (250,000 GAL)
OVERFLOW
ELECTRIC FURNACES (4) NON-CONTACT COOLING WATER
379 l/SEC. (6000 G.P.M.)
587 l/SEC. (9300 G.P.M.)
92.2 l/SEC. (1460 G.P.M.)
SAND FILTERS
COOLING TOWER
6.5 l/SEC. (100 G.P.M.) 3 HRS.-DAY
B
30 l/SEC. (480 G.P.M.)
164 l/SEC. (2600 G.P.M.)
MAKEUP WATER
BLOWDOWN
D
BACKWASH
MAIN RESERVOIR (20,000,000 GAL)
A
32 l/SEC. (500 G.P.M.)
MAIN HOT WELL
17.7 l/SEC. (280 G.P.M.)
PRIMARY SCALE PIT
G
l/SEC. G.P.M.)
SOLIDS TO DISPOSAL
EXCESS WATER TO RESERVOIR
△ - SAMPLING POINT
ENVIRONMENTAL PROTECTION AGENCY
STEEL INDUSTRY STUDY
VACUUM DEGASSING-CONTINUOUS CASTING
WASTEWATER TREATMENT SYSTEM
WATER FLOW DIAGRAM
DWN. 2-14-78
REV. 9/7/78
FIGURE VII-5

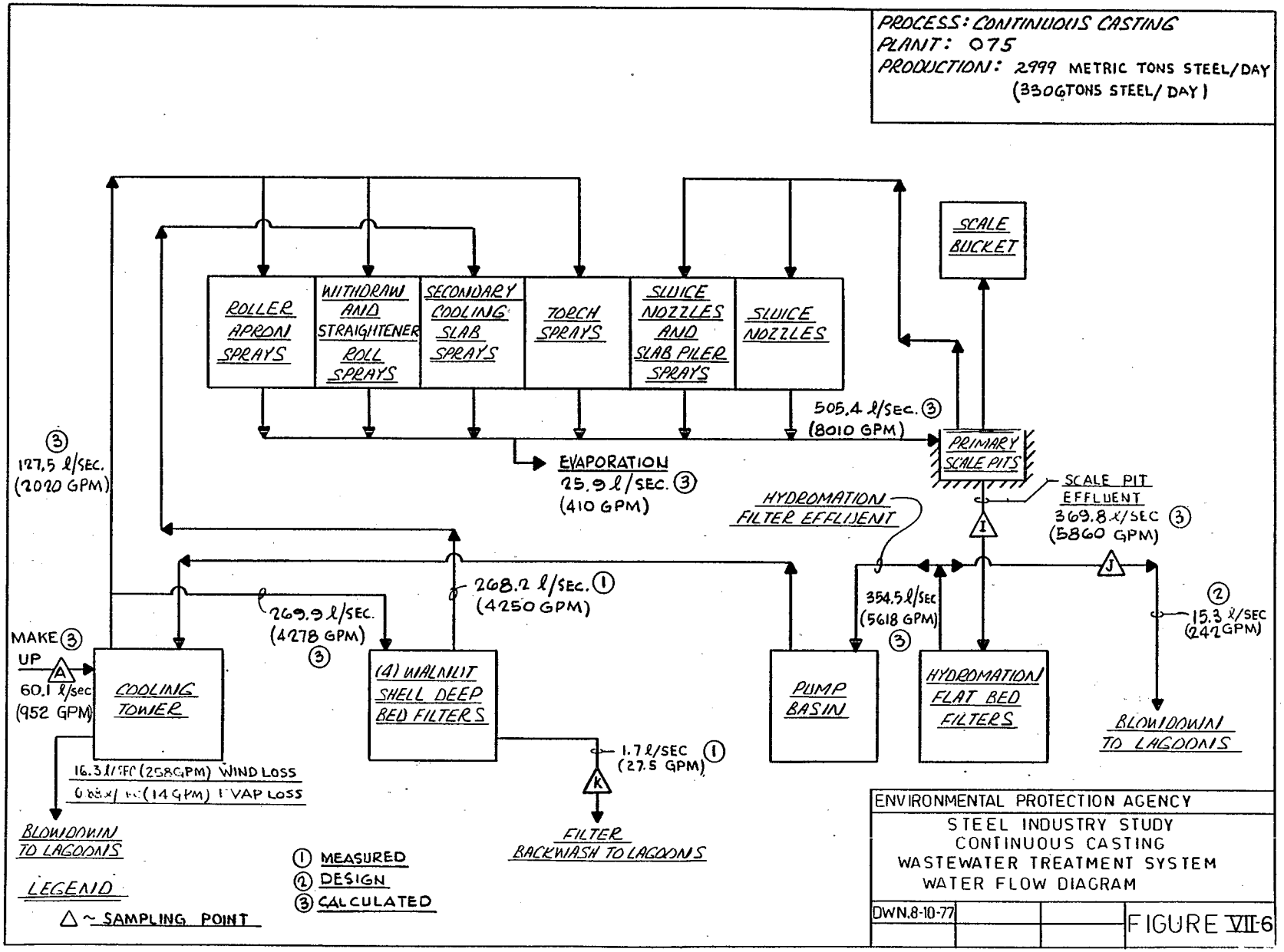
PROCESS: CONTINUOUS CASTING
PLANT: 075
PRODUCTION: 2999 METRIC TONS STEEL/DAY
(3306 TONS STEEL/DAY)
ROLLER APRON SPRAYS
WITHDRAW AND STRAIGHTENER ROLL SPRAYS
SECONDARY COOLING SLAB SPRAYS
TORCH SPRAYS
SLUICE NOZZLES AND SLAB PILER SPRAYS
SLUICE NOZZLES
SCALE BUCKET
505.4 ℓ/SEC. ③
(8010 GPM)
PRIMARY SCALE PITS
SCALE PIT EFFLUENT
369.8 ℓ/SEC ③
(5860 GPM)
EVAPORATION
25.9 ℓ/SEC. ③
(410 GPM)
③
127.5 ℓ/SEC.
(2020 GPM)
HYDROMATION FILTER EFFLUENT
268.2 ℓ/SEC. ①
(4250 GPM)
269.9 ℓ/SEC.
(4278 GPM)
③
354.5 ℓ/SEC
(5618 GPM)
③
②
15.3 ℓ/SEC
(242 GPM)
MAKE UP ③
60.1 ℓ/sec
(952 GPM)
COOLING TOWER
(4) WALNUT SHELL DEEP BED FILTERS
PUMP BASIN
HYDROMATION FLAT BED FILTERS
BLOWDOWN TO LAGOONS
1.7 ℓ/SEC ①
(27.5 GPM)
16.3 ℓ/SEC (258 GPM) WIND LOSS
0.88 ℓ/SEC (14 GPM) EVAP LOSS
BLOWDOWN TO LAGOONS
FILTER BACKWASH TO LAGOONS
LEGEND
△ ~ SAMPLING POINT
① MEASURED
② DESIGN
③ CALCULATED
ENVIRONMENTAL PROTECTION AGENCY
STEEL INDUSTRY STUDY
CONTINUOUS CASTING
WASTEWATER TREATMENT SYSTEM
WATER FLOW DIAGRAM
DWN. 8-10-77
FIGURE VII-6

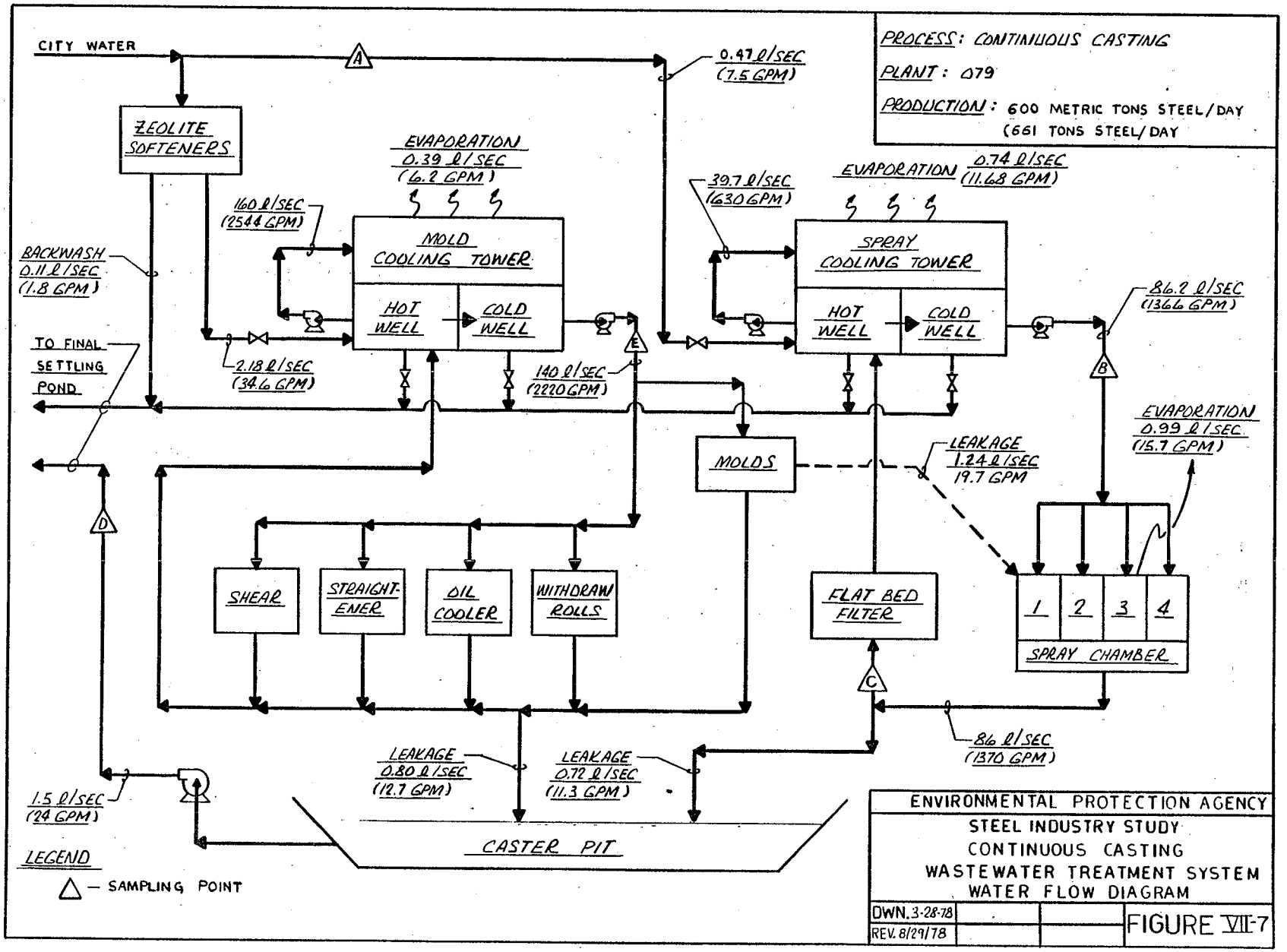
PROCESS: CONTINUOUS CASTING
PLANT: 079
PRODUCTION: 600 METRIC TONS STEEL/DAY
(661 TONS STEEL/DAY
CITY WATER
ZEOLITE SOFTENERS
0.47 ℓ/SEC (7.5 GPM)
EVAPORATION 0.39 ℓ/SEC (6.2 GPM)
160 ℓ/SEC (2544 GPM)
MOLD COOLING TOWER
HOT WELL
COLD WELL
BACKWASH 0.11 ℓ/SEC (1.8 GPM)
TO FINAL SETTLING POND
2.18 ℓ/SEC (34.6 GPM)
140 ℓ/SEC (2220 GPM)
39.7 ℓ/SEC (630 GPM)
EVAPORATION 0.74 ℓ/SEC (11.68 GPM)
SPRAY COOLING TOWER
HOT WELL
COLD WELL
86.2 ℓ/SEC (1366 GPM)
EVAPORATION 0.99 ℓ/SEC (15.7 GPM)
MOLDS
LEAKAGE 1.24 ℓ/SEC 19.7 GPM
SHEAR
STRAIGHTENER
OIL COOLER
WITHDRAW ROLLS
FLAT BED FILTER
1 2 3 4
SPRAY CHAMBER
86 ℓ/SEC (1370 GPM)
LEAKAGE 0.80 ℓ/SEC (12.7 GPM)
LEAKAGE 0.72 ℓ/SEC (11.3 GPM)
1.5 ℓ/SEC (24 GPM)
CASTER PIT
LEGEND
△ — SAMPLING POINT
A
B
C
D
E
ENVIRONMENTAL PROTECTION AGENCY
STEEL INDUSTRY STUDY
CONTINUOUS CASTING
WASTEWATER TREATMENT SYSTEM
WATER FLOW DIAGRAM
DWN. 3-28-78
REV. 8/29/78
FIGURE VII-7

CONTINUOUS CASTING SUBCATEGORY

SECTION VIII

COST, ENERGY, AND NON-WATER QUALITY IMPACTS

Introduction

This section addresses the cost, energy, and non-water quality impacts of applying the different levels of pollution control to continuous casting operations. It includes a discussion of actual treatment costs incurred at sampled plants, alternative treatment technologies, and the cost, energy, and other non-water quality impacts associated with the application of the BPT, BAT, NSPS, PSES, and PSNS alternative treatment systems. In addition, the consumptive use of water is addressed.

Actual Costs Incurred at Plants Sampled For This Study

The water pollution control costs for the continuous casting operations visited during this study are presented in Table VIII-I. The costs were derived from data supplied by the industry at the time of sampling or from data submitted in response to the D-DCPs. The costs have been adjusted to July 1978 dollars. In some instances, standard cost of capital and depreciation factors were applied to the reported costs to determine those portions of the annual costs of operation. In the remaining instances, those costs were provided by the plants.

The capital cost data from the plants noted above were compared with the Agency's estimated expenditures and factored on the basis of production for these plants. Many component costs may vary due to the fact that different plant personnel use different methods to determine costs. Despite these limitations, the comparison indicates that model cost estimates of seven continuous casting operations are representative of the actual costs of these operations.

CONTINUOUS CASTING
EFFLUENT TREATMENT COST COMPARISON

Plant	Actual Cost	Estimated(1) Cost
0584 F	2,413,632	4,401,000
0868 B	3,559,140	2,338,000
0384 A(2)	2,028,858	2,274,000
0384 A(3)	10,025,762	4,397,000
0528 A	5,926,290	5,828,000
0620 A	1,030,000	1,084,000
0684 E	4,397,468	2,682,000
Total Cost	29,381,150	23,004,000

(1) Estimates are made on a tonnage (TPD) basis.
(2) Billet casting operation.
(3) Slab casting operation.

Reference is made to the discussion presented in Volume 1 for further verification of the applicability of the treatment model costs.

The data show that industry costs are about 28% higher than the Agency's estimate for the seven continuous casting treatment systems. However, most of the difference is attributed to the continuous slab caster at Plant 0384 A, which has an applied flow which is twice that of the model flow. EPA estimates are based upon production and not upon applied flow. Thus, the treatment components in place at this facility are larger than the corresponding model size treatment components, which are more typical of the subcategory. Industry costs are about 4 percent higher than the Agency's estimates without considering costs for this facility. In any event, the above data demonstrate reasonably good agreement between actual industry costs and EPA estimates. The Agency concludes that its cost estimates for the continuous casting subcategory reasonably reflect actual costs.

Control and Treatment Technologies (C&TT)
Recommended For Use in Continuous Casting

The BPT and BAT model treatment system components are presented in Table VIII-2. The model treatment systems for BPT, BAT, NSPS, PSES, and PSNS are depicted in Figure VIII-1. It should be noted that these specific C&TT components are not required. Any treatment system which achieves compliance with the proposed effluent limitations is adequate.

On this summary table, the following items are described for each step:

1. Description of the treatment and/or control step
2. Implementation time
3. Land usage

Cost, Energy, and Non-water Quality Impacts

Estimated Costs for the Installation of Pollution Control Technologies

A. Costs Required to Achieve the BPT Limitations

In order to develop BPT compliance costs, it was necessary to develop a BPT model sized to represent the average continuous casting plant found in the United States. The model size (ton/day) was developed on the basis of the average production capacity of all continuous casters. The treatment model components and flow rates are also representative of actual continuous casting operations. The unit cost for each treatment model component was developed. These costs are presented in Table VIII-3 along with BPT model annual costs and raw and effluent flows and pollutant concentrations.

The capital requirements needed to achieve the BPT limitations for the continuous casting operations were determined by applying the treatment model component costs, adjusted for size, to each casting operation. The estimates of the expenditures required to bring these plants from current treatment levels to compliance with the BPT limitations, were necessary to assess the economic impact of the effluent limitations and standards upon the industry. The estimated capital cost to comply with BPT for this subcategory is $64.4 million (July 1978 dollars). Of this total, equipment valued at $59.6 million is currently in-place at various casting facilities as of July 1981. Hence, $4.8 million remains to be spent for additional treatment equipment. The incremental annual operating costs for the BPT treatment systems remaining to be installed is $0.8 million.

B. Cost Required to Achieve the BAT Limitations

The Agency considered three alternative treatment systems for the BAT model treatment system as described in Section X. The investment and annual expenditures for each of the BAT alternative treatment systems, in excess of BPT expenditures, are presented in Table VIII-4. The subcategory investment and annual expenditures for each BAT alternative are shown below.

BAT Alternative	Investment Cost	Annual Cost
1	$ 846,000	$ 115,000
2	$ 3,054,000	$ 425,000
3	$39,755,000	$5,500,000

C. Costs Required to Achieve NSPS and PSNS

The Agency considered three treatment alternatives for continuous casting facilities which are constructed after the proposal of these standards. The NSPS and PSNS treatment alternatives are similar to the BPT/BAT model treatment systems except that a

greater degree of recycle is achieved at NSPS/PSNS-1 than at BPT. Also the in-line BPT flat bed filter is replaced by a pressure filter at NSPS/PSNS. The acid neutralization step, the final step in alternative 2, is not necessary in the PSNS-2 alternative. The NSPS and PSNS treatment alternatives are discussed in Sections XII and XIII, while the treatment model costs are presented in Table VIII-5. Only model costs are presented, since projections of capacity addition were not made as part of this study.

E. Costs Required to Achieve PSES Compliance for the Industry

The Agency considered four pretreatment alternatives for existing continuous casting facilities which discharge to POTW systems. These PSES alternatives are identical to the BPT/BAT model treatment systems, with the exception of the acid neutralization step which is not a part of the PSES-3 alternative. The PSES treatment alternatives are discussed in Section XIII, while the treatment model costs are presented in Table VIII-4. The subcategory costs for these alternatives follow:

PSES Alternative	Investment Cost-$	Annual Cost-$
1	8,901,000	1,330,000
2	141,000	19,000
3	443,000	62,000
4	8,540,000	1,182,000

The costs for PSES Alternatives 2 through 4 are incremental to the costs for PSES-1.

Energy Impacts

Moderate amounts of energy are required to operate the various treatment systems considered for the continuous casting subcategory. The major energy expenditures occur at the BPT treatment level, while BAT-1/PSES-2 and BAT-2/PSES-3 require minor incremental energy expenditures. The incremental energy requirement for BAT-3/PSES-4 is 133 kw which is more than twenty times that of BAT Alternative 1.

A. Energy Impacts at BPT

The estimated energy requirements are based upon the assumptions that treatment systems similar to the model treatment system will be installed at all continuous casting shops, and, that these systems will have flows similar to those of the model. On this basis, the estimated annual energy usage for BPT treatment components for all continuous casting operations is 108.7 million kilowatt-hours of electricity. This estimate represents about 0.19 percent of the 57 billion kilowatt-hours used by the steel industry in 1978.

B. Energy Impacts at BAT

The estimated energy requirements for the BAT alternative treatment systems are based upon the same assumptions noted above for BPT. The estimated energy requirements needed to upgrade facilities from BPT to the three BAT alternatives follow.

BAT Alternative	kwh per year	% of 1978 Industry Usage
1	300,000	0.00055
2	1,200,000	0.0021
3	21,200,000	0.037

C. Energy Impacts at NSPS and PSNS

The energy requirements for the NSPS and PSNS models follow. The Agency did not evaluate the total energy requirements for NSPS and PSNS, since estimates of future additions were not made as part of this study.

Model	kwh per year
NSPS-1,PSNS-1	2,612,000
NSPS-2	2,660,000
PSNS-2	2,652,000
NSPS-3	3,460,000
PSNS-3	3,452,000

D. Energy Impacts at PSES

The estimated energy requirements for the four PSES alternative treatment systems are based upon the same assumptions noted for BPT. The estimates for the four systems are:

PSES Alternative	kwh per year	% of 1978 Industry Usage
1	18,116,000	0.032
2	84,000	0.00015
3	280,000	0.00049
4	5,936,000	0.010

The energy requirements for PSES Alternatives 2 through 4 are incremental to the PSES-1 energy requirements. As stated below, the Agency believes these energy requirements are justified by the effluent reduction benefits.

Non-water Quality Impacts

In general, the non-water quality impacts associated with the alternative treatment technologies are minimal. The three impacts evaluated are air pollution, solid waste disposal, and water consumption.

A. Air Pollution

The Agency expects no adverse air pollution impacts associated with any of the model treatment systems.

B. Solid Waste Disposal

The treatment steps incorporated in the BPT and BAT treatment systems will generate significant quantities of solids and oils and greases. A summary of the solid waste generation, on a dry basis, for the continuous casting subcategory, at the BPT, BAT, and PSES levels of treatment, follows.

Treatment Level	Solid Waste Generation Continuous Casting Subcategory (Tons/Year)
BPT	19,740
BAT-1,BAT-2,BAT-3	-
PSES-1	3,290
PSES-2,PSES-3,PSES-4	-

The BPT and PSES-1 treatment levels remove virtually all of the solid wastes which the model treatment systems are capable of removing. Most of the solid waste is comprised of suspended solids (principally iron oxides) which require proper disposal, if they are not reused in the iron and steel making operations. The oils, which can not be reused or reclaimed, also require proper disposal, generally off-site.

The estimated amounts of solid wastes and oils and greases generated by the NSPS/PSNS models follow.

Treatment Level	Solid Waste Generation Treatment Model (Tons/Year)
NSPS-1, PSNS-1	470
NSPS-2, PSNS-2	470
NSPS-3, PSNS-3	470

C. Water Consumption

The Agency analyzed the consumption of water for the alternative treatment systems. The total process water usage and the consumptive use of water in the continuous casting subcategory

are estimated to be 233 and 3.44 million gallons of water per day (MGD), respectively, as of July 1978. Upon installation of the BPT model or BAT alternative treatment systems, this total will increase slightly to 3.84 or 3.88 MGD respectively. Therefore, the fraction of water actually consumed is very small, about 1.7%. This slight increase in the amount of water consumed is insignificant compared to the remaining water that will be recycled. The volume of fresh water required for use as make-up will be greatly reduced due to recycle, and very little additional fresh water will become contaminated.

The Agency concluded that the pollution control benefits associated with recycle in this subcategory justify the above minor water losses on both a nation-wide and an arid or semi-arid region basis. Three of the four plants the Agency considers to be in arid or semi-arid regions have recycle systems installed for continuous casting operations. Hence, the effect of the limitations on additional water losses for these plants will be negligible. The fourth plant does not have a continuous casting operation. If one were installed at this facility, only about 0.3 MGD would be lost. The Agency concludes that losses of this magnitude at this site are not significant.

Summary of Impacts

In summary, the Agency concludes that the pollutant reduction benefits described below for the continuous casting subcategory outweigh the adverse energy and non-water quality environmental impacts.

Direct Discharges
Effluent Loads (Tons/Year)

	Raw Waste	BPT	BAT 2
Flow, MGD	200	4.4	0.9
TSS	18,268	266.5	29.3
Oil and Grease	7,612	66.6	5.9
Toxic Metals	493	10.8	1.7

Indirect Dischargers
Effluent Loads (Tons/Year)

	Raw Waste	PSES 2
Fow, MGD	33.3	0.2
TSS	3,045	3.7
Oil and Grease	1,269	0.7
Toxic Metals	82.2	0.6

The Agency also concludes that the effluent reduction benefits associated with compliance with new source standards (NSPS, PSNS) outweigh the adverse energy and now-water quality environmental impacts.

TABLE VIII-1

EFFLUENT TREATMENT COSTS
CONTINUOUS CASTING

(All costs expressed in July, 1978 dollars)

Plant Code	AE[1]	AF	071	-
Reference Code	0584F	0868B	0284A	0384A[4]
Initial Investment ($)	2,413,632	3,559,140	-	2,028,858
Annual Costs ($)				
Capital	216,986[2]	319,967[2]	-	182,394[2]
Oper. & Maint.	176,936	993,429	49,234	201,390
Energy & Power	Included Above	Included Above	66,847	132,136
Chemical Costs	-	-	-	-
Other (sludge, etc.)	-	-	-	50,985
TOTAL ($)	393,922	1,313,396	116,081	566,905
$/Ton	0.30[3]	2.58[3]	1.07[3]	0.93[3]

TABLE VIII-1
EFFLUENT TREATMENT COSTS
CONTINUOUS CASTING
PAGE 2

(All costs expressed in July, 1978 dollars)

Plant Code	-	-	-
Reference Code	0528A	0620A	0684E
Initial Investment ($)	5,926,290	1,030,000	4,397,468
Annual Costs ($)			
Capital	532,773(2)	92,597(2)	395,332(2)
Oper. & Maint.	-	50,000	-
Energy & Power	-	80,000	-
Chemical Costs	-	-	-
Other (sludge, etc.)	-	6,000	-
TOTAL ($)		228,597	
$/Ton	-	0.72(3)	-

(1) Resampled as Plant 075.
(2) Capital cost was calculated by using the following formula: (0.0899) X (initial investment).
(3) Calculation based on 1976 production.
(4) Billet caster.

TABLE VIII-2

CONTROL AND TREATMENT TECHNOLOGIES
CONTINUOUS CASTING SUBCATEGORY

C&TT Step	Description	Implementation Time (months)	Land Usage (ft^2)
A	Scale Pit with Drag Tank and Surface Skimming - Initial solid waste reduction is accomplished via gravity sedimentation. The skimmer provides initial surface oil reduction.	6-8	700
B	Flat Bed Filter - This step provides additional solid waste reduction.	15-18	2400
C	Cooling Tower - The heat load of the process recycle is reduced in this step.	18-20	900
D	Recycle - Ninety-six percent of the filter effluent is returned to the process. This step reduces the pollutant load discharged from the process.	12-14	625
E	Pressure Filter - Additional solid waste and oil and grease reduction is accomplished.	15-18	625
F	Neutralization with Lime - The addition of lime results in the formation of metallic hydroxide precipitates which can be removed by sedimentation.	12	625
G	Inclined Plate Separator - Through sedimentation, additional suspended solids and particulate metallic pollutants are removed.	10-12	50
H	Neutralization with Acid - The pH of the treatment system effluent is monitored and adjusted with acid.	8-10	-

TABLE VIII-2
CONTROL AND TREATMENT TECHNOLOGIES
CONTINUOUS CASTING SUBCATEGORY
PAGE 2

C&TT Step	Description	Implementation Time (months)	Land Usage (ft^2)
I	Vapor Compression Distillation - This step produces water of distillate quality for recycle to the process.	6	1000
J	Recycle - The water produced in step I is completely recycled to the process.	2	625

TABLE VIII-3

BPT TREATMENT MODEL COSTS: BASIS 7/1/78 DOLLARS

Subcategory: Continuous Casting

Model Size-TPD : 1,400
Oper. Days/Year: 365
Turns/Day : 3

C&TT Step	A	B	C	D	Total
Investment ($ x 10^{-3})	320.0	543.0	891.0	550.0	2,304.0
Annual Costs ($ x 10^{-3})					
Capital	28.8	48.8	80.1	49.4	207.1
Operation & Maintenance	11.2	19.0	31.2	19.3	80.7
Land	0.1	0.1	0.1	0.1	0.4
Sludge Disposal	1.5	0.5			2.0
Hazardous Waste Disposal					
Oil Disposal		1.4			1.4
Energy & Power		19.8	44.9		64.7
Steam					
Waste Acid					
Crystal Disposal					
Chemical					
TOTAL	41.6	89.6	156.3	68.8	356.3
Credits					
Scale					
Sinter					
Oil					
Acid Recovery					
TOTAL CREDITS					
NET TOTAL	41.6	89.6	156.3	68.8	356.3

KEY TO C&TT STEPS

A: Drag Tank with Skimming
B: Flat Bed Filtration
C: Cooling Tower
D: Recycle

TABLE VIII-4

BAT/PSES TREATMENT MODEL COSTS: BASIS 7/1/78 DOLLARS

Subcategory: Continuous Casting

Model Size - TPD: 1,400
Oper. Days/Year : 365
Turns/Day : 3

C&TT Step	Total BPT	BAT Alternative 1		BAT Alternative 2				BAT Alternative 3		
		E	Total	F	G	H*	Total	E	J	Total
Investment ($ x 10^{-3})	2,304.0	35.4	35.4	29.2	52.8	42.4	124.4	1,556.0	25.3	1,581.3
Annual Costs ($ x 10^{-3})										
Capital	207.1	3.2	3.2	2.6	4.7	3.8	11.1	139.9	2.3	142.2
Operation & Maintenance	80.7	1.2	1.2	1.0	1.8	1.5	4.3	54.5	0.9	55.4
Land	0.4	0.1	0.1	0.1	0.1		0.2	0.1	0.1	0.2
Sludge Disposal	2.0									
Hazardous Waste Disposal										
Oil Disposal	1.4									
Energy & Power	64.7	0.3	0.3	0.5	0.5	0.2	1.2	21.2		21.2
Steam										
Waste Acid										
Crystal Disposal										
Chemical				0.2		0.3	0.5			
TOTAL	356.3	4.8	4.8	4.4	7.1	5.8	17.3	215.7	3.3	219.0
Credits										
Scale										
Sinter										
Oil										
Acid Recovery										
TOTAL CREDITS										
NET TOTAL	356.3	4.8	4.8	4.4	7.1	5.8	17.3	215.7	3.3	219.0

KEY TO TREATMENT ALTERNATIVES

PSES-1 = BPT
PSES-2 = BPT + BAT-1
PSES-3 = BPT + BAT-2
PSES-4 = BPT + BAT-3

KEY TO C&TT STEPS

E: Pressure Filtration
F: Neutalization with Lime
G: Inclined Plate Separation
H: Neutralization with Acid
I: Vapor Compression Distillation
J: Recycle

* The pH control with acid treatment component was not included in the Model Costs for POTW dischargers.

TABLE VIII-5

NSPS/PSNS TREATMENT MODEL COSTS: BASIS 7/1/78 DOLLARS

Subcategory: Continuous Casting

Model Size - TPD: 1,400
Oper. Days/Year : 365
Turns/Day : 3

C&TT Step	NSPS/PSNS Alternative 1					NSPS/PSNS Alternative 2 Alternative 1 Plus:				NSPS/PSNS Alternative 3 Alternative 1 Plus:		
	A	B	C	D	Total	E	F	G*	Total	H	I	Total
Investment ($ x 10^{-3})	320.0	1,660.1	901.3	560.4	3,441.8	29.2	52.8	42.4	3,566.2	1,556.0	25.3	5,023.1
Annual Cost ($ x 10^{-3})												
Capital	28.8	149.2	81.0	50.4	309.4	2.6	4.7	3.8	320.5	139.9	2.3	451.6
Operation & Maintenance	11.2	58.1	31.5	19.6	120.4	1.0	1.8	1.5	124.7	54.5	0.9	175.8
Land	0.1	0.1	0.1	0.1	0.4	0.1	0.1		0.6	0.1	0.1	0.6
Sludge Disposal	1.5	0.5			2.0				2.0			2.0
Hazardous Waste Disposal												
Oil Disposal		1.4			1.4				1.4			1.4
Energy & Power		20.4	44.9		65.3	0.5	0.5	0.2	66.5	21.2		86.5
Steam												
Waste Acid												
Crystal Disposal												
Chemical						0.2		0.3	0.5			
TOTAL	41.6	229.7	157.5	70.1	498.9	4.4	7.1	5.8	516.2	215.7	3.3	717.9
Credits												
Scale												
Sinter												
Oil												
Acid Recovery												
TOTAL CREDITS												
NET TOTAL	41.6	229.7	157.5	70.1	498.9	4.4	7.1	5.8	516.2	215.7	3.3	717.9

KEY TO C&TT STEPS

A: Drag Tank with Skimming
B: Pressure Filtration
C: Cooling Tower
D: Recycle
E: Neutralization with Lime
F: Inclined Plate Separation
G: Neutralization with Acid
H: Vapor Compression Distillation
I: Recycle

* The pH control with acid treatment component was not included in the Model Costs for POTW dischargers.

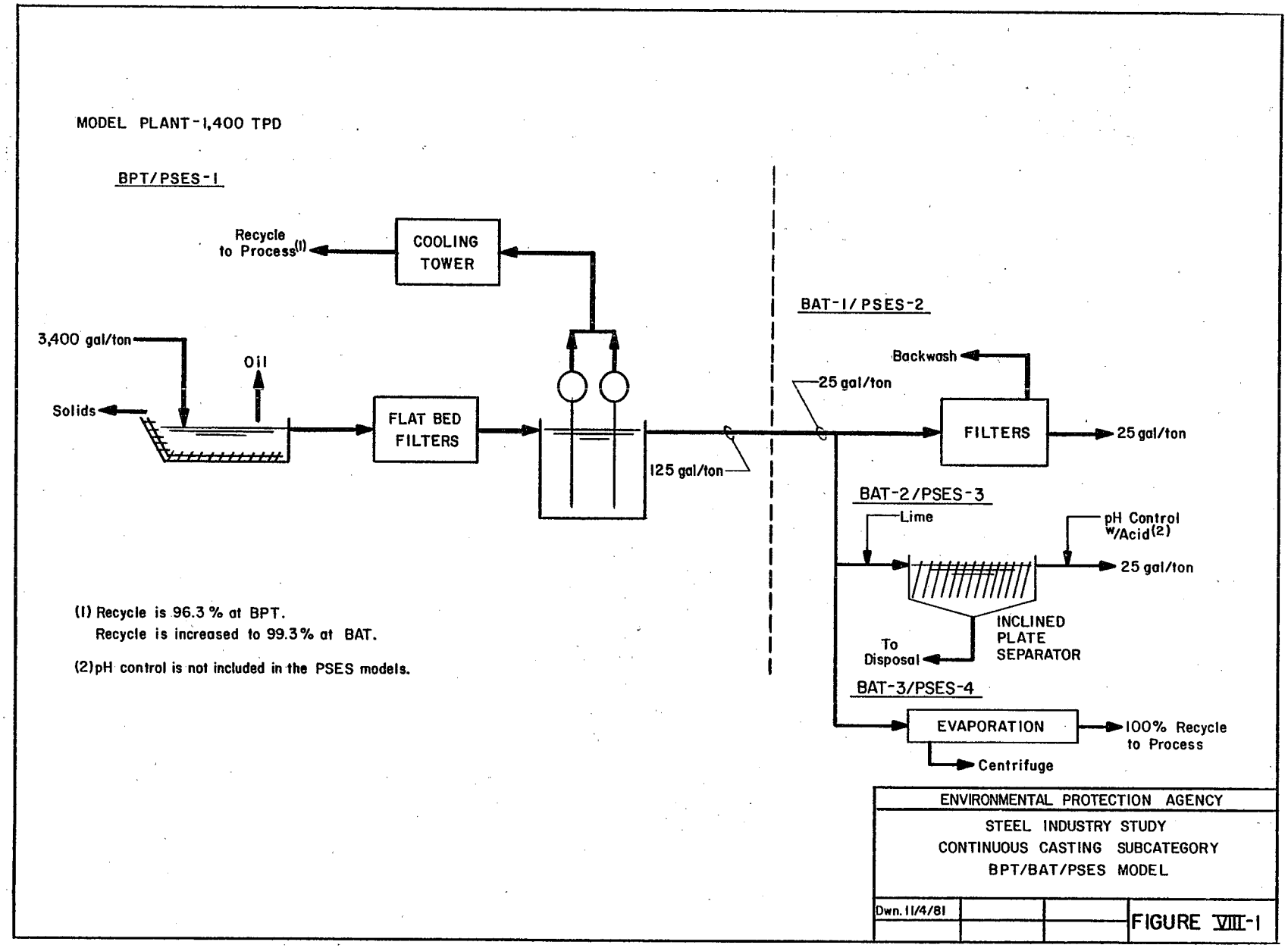
MODEL PLANT-1,400 TPD
BPT/PSES-1
Recycle to Process(1)
COOLING TOWER
3,400 gal/ton
Oil
Solids
FLAT BED FILTERS
125 gal/ton
BAT-1/PSES-2
25 gal/ton
Backwash
FILTERS
25 gal/ton
BAT-2/PSES-3
Lime
pH Control w/Acid(2)
25 gal/ton
INCLINED PLATE SEPARATOR
To Disposal
BAT-3/PSES-4
EVAPORATION
100% Recycle to Process
Centrifuge
(1) Recycle is 96.3 % at BPT.
Recycle is increased to 99.3 % at BAT.
(2) pH control is not included in the PSES models.
ENVIRONMENTAL PROTECTION AGENCY
STEEL INDUSTRY STUDY
CONTINUOUS CASTING SUBCATEGORY
BPT/BAT/PSES MODEL
Dwn. 11/4/81
FIGURE VIII-1

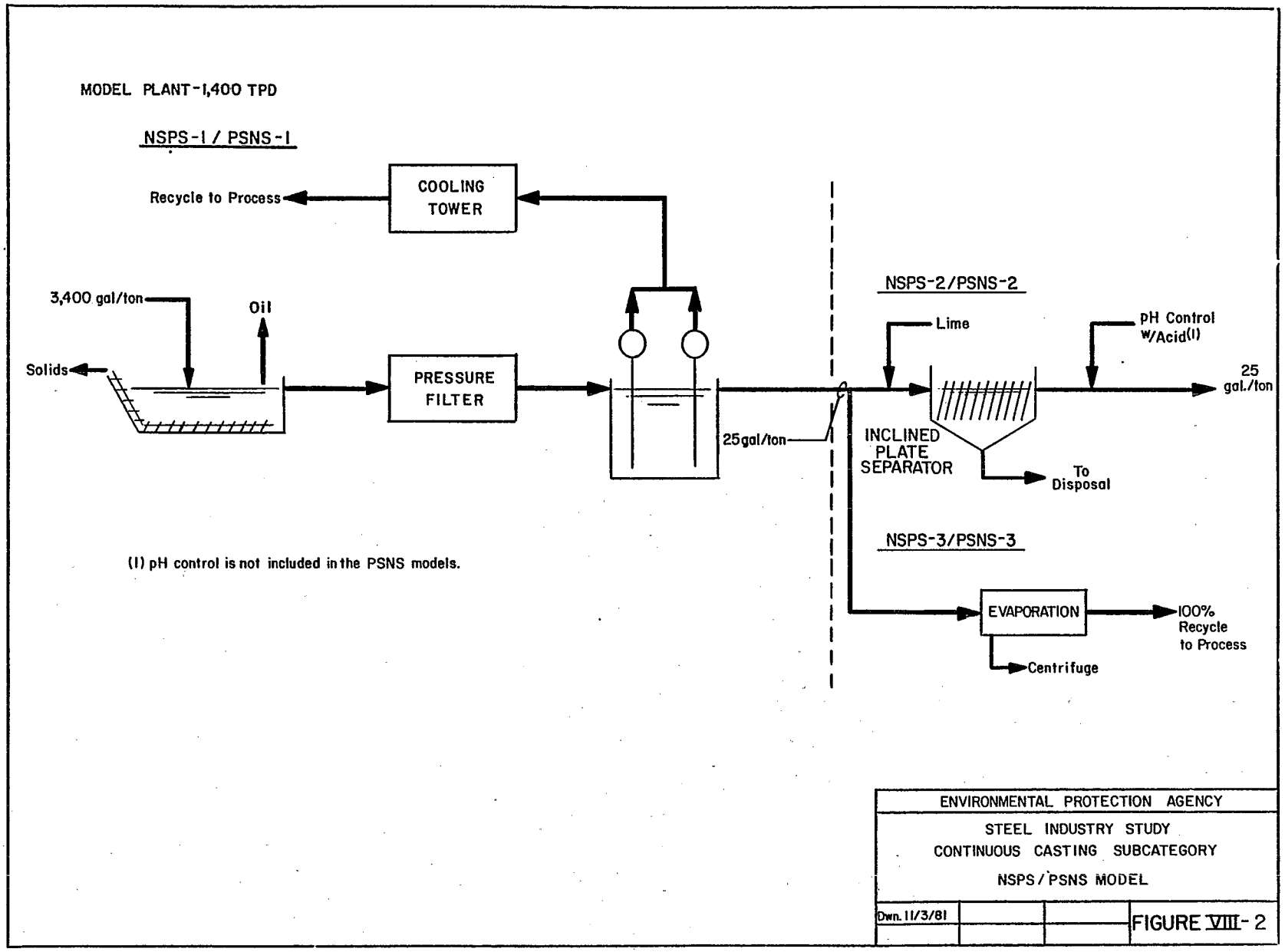
MODEL PLANT-1,400 TPD
NSPS-1 / PSNS-1
Recycle to Process
COOLING TOWER
3,400 gal/ton
Oil
Solids
PRESSURE FILTER
25gal/ton
NSPS-2/PSNS-2
Lime
pH Control w/Acid(1)
25 gal./ton
INCLINED PLATE SEPARATOR
To Disposal
NSPS-3/PSNS-3
EVAPORATION
100% Recycle to Process
Centrifuge
(1) pH control is not included in the PSNS models.
ENVIRONMENTAL PROTECTION AGENCY
STEEL INDUSTRY STUDY
CONTINUOUS CASTING SUBCATEGORY
NSPS/PSNS MODEL
Dwn. 11/3/81
FIGURE VIII-2

CONTINUOUS CASTING SUBCATEGORY

SECTION IX

EFFLUENT QUALITY ATTAINABLE THROUGH THE APPLICATION OF THE BEST PRACTICABLE CONTROL TECHNOLOGY CURRENTLY AVAILABLE

Introduction

The Agency has promulgated BPT limitations which are the same as those orginally promulgated in 1974[1] and reproposed on January 7, 1981 (46 FR 1858).[2] A review of the treatment processes and effluent limitations associated with the continuous casting subcategory follows.

Identification of BPT

The BPT model treatment system is the same as the system used to develop the original BPT limitations promulgated in June 1974. This system includes a primary scale pit equipped with a drag link conveyor and oil removal facilities, a flat bed filter, a cooling tower, and recycle. Suspended solids collected by the scale pit are disposed internally or landfilled. Accumulated oils are hauled away or incinerated. The overflow from the scale pit is pumped to a flat bed filter. The filter effluent is recycled through a cooling tower to the process, except for a small blowdown, which is discharged to a receiving stream. Make-up water is added to the recycle system to compensate for evaporative and blowdown losses.

Figure IX-1 depicts the BPT model treatment system for continuous casters. The BPT effluent limitations, which represent 30-day average and daily maximum values are presented below:

---

[1]See EPA 440/1-74 024a; Development Document for Effluent Limitation Guidelines and New Source Performance Standards for the Steelmaking Segment of the Iron and Steel Manufacturing Point Source Category, June 1974.

[2]See EPA 440/1-80/024b; Proposed Development Document for Effluent Limitations Guidelines and Standards for the Iron and Steel Manufacturing Point Source Category, December 1980, Volume III.

Pollutant	kg/kkg of Product (lb/1000 lb of Product)	
	Daily Maximum	30-Day Average
Suspended Solids	0.0780	0.0260
Oil and Grease	0.0234	0.00780
pH (Units)	6.0-9.0	

Rationale for BPT Treatment System

As noted in Section VII, each of the BPT model treatment system components is in use at a number of continuous casting operations.

Justification of BPT

Table IX-1 presents sampled plant effluent data which support the BPT effluent limitations. The ability to achieve the BPT effluent limitations with flat bed and other types of filtration systems is well demonstrated by those data. The Agency believes those plants are representative of the industry. One sampled plant was not achieving the BPT limitations, because filter backwash water was discharged directly. Recycling the backwash for further treatment and increasing the total system recycle rate would allow that plant to meet the limitations. Hence, based upon the data from these plants and those achieving zero discharge, the Agency concludes the BPT limitations are achievable. Table IX-2 shows the basis for the applied and discharge flows for the continuous casting subcategory.

TABLE IX-1

EFFLUENT LOAD (lbs/1000 lbs) JUSTIFICATION
CONTINUOUS CASTING

	Discharge Flow (gal/ton)	Suspended Solids	Oil and Grease	pH	C&TT Components
Originally Promulgated BPT	125	0.026	0.0078	6.0-9.0	PSP,SS,FF,CT,RTP96.3
Plants					
AF (0868B)	17	0.0016	0.000035	6.8	PSP,SS,FDSP,CT,RTP98.9
D (0248B)	Zero Discharge			*	PSP,SSP,SS,FDSP,Scr, RTP100
Q (Unk)	Zero Discharge			8.9	PSP,CT,RTP100
071 (0284A)	Zero Discharge			9.4	PSP,FSP,T,CT,RTP100
072 (0496)	Zero Discharge			7.6-8.1	PSP,FLP,FDSP,CLA, CT,RTP100
079 (0060K)	25	0.0050	0.0041	7.1-7.2	PSP,FF,CT,RTP100

* Insufficient Data

TABLE IX-2

SUMMARY OF FLOWS AND RECYCLE RATES
CONTINUOUS CASTING SUBCATEGORY

Plant Code	Applied Flow (gal/ton)	Discharge Flow (gal/ton)	Operating Mode	Basis
0060	-	0	RTP 100	DCP
0076	1656	0	RTP 100	DCP
0084A	-	0	RUP 100	DCP
0132	-	0	RTP 100	DCP Update
0136B	-	0	RTP 100	DCP Update
0188C	-	0	RTP 100	DCP Update
0248B	2000	0	RTP 100	DCP
0284A	564	0	RTP 100	Survey
0316	-	0	RTP 100	DCP Update
0316A	-	0	RTP 100	DCP Update
0456A	-	0	RTP 100	DCP Update
0496	1542	0	RTP 100	Survey
0596	5161	0	RTP 100	DCP
0620A	22	0	RTP 100	DCP
0672A	547	0	RTP 100	DCP
0780	1934	0	RTP 100	DCP
0740A	1415	1.2*	RTP 99.9	DCP
0180	4012	4.0*	RTP 99.9	DCP
0608A	2764	11*	RTP 99.6	DCP
0384A-1	3281	16*	RTP 97.1	DCP
0620B	2000	24*	RTP 98.9	DCP
0060K	2985	25*	RTP 99.2	Survey
0468F	2187	28*	RTP 98.7	DCP
0684E	1375	49*	RTP 96.5	DCP
0432A	2496	56	RTP 97.8	DCP
0696A	1341	66	RTP 95.1	DCP
0548D	3755	79	RTP 97.9	DCP
0476A	16210	81	RTP 99.5	DCP
0060H	923	92	RTP 90	DCP
0384A-2	7062	98	RTP 98.6	DCP
0584F	3489	117	RTP 97	Survey
0112D	6408	128	RTP 98	DCP
0468B	927	128	RTP 86	DCP
0528A	4814	144	RTP 97	DCP
0444	4294	245	RTP 94.3	DCP
0868B	8258	310	RTP 96.2	DCP
0060D	1678	554	RTP 67	DCP
0864C	-	571	-	DCP
0068B	6111	611	RUP 90	DCP
0856F	1278	1278	OT	DCP
0652	1375	1375	OT	DCP
0460A	4509	1527	RTP 66.2	DCP
0204	2543	2543	REU 100	DCP
0860H	5318	5318	RET 100	DCP
0860B	5489	5489	OT	DCP

Average Applied Flow = 3381 gal/ton.
Average Discharge Flow = 466 gal/ton.
"Average of the Best" Discharge Flow = 20 gal/ton.

---

* Flow values marked with an asterisk were used in the "average of the best" calculation.
- Inadequate questionnaire response.

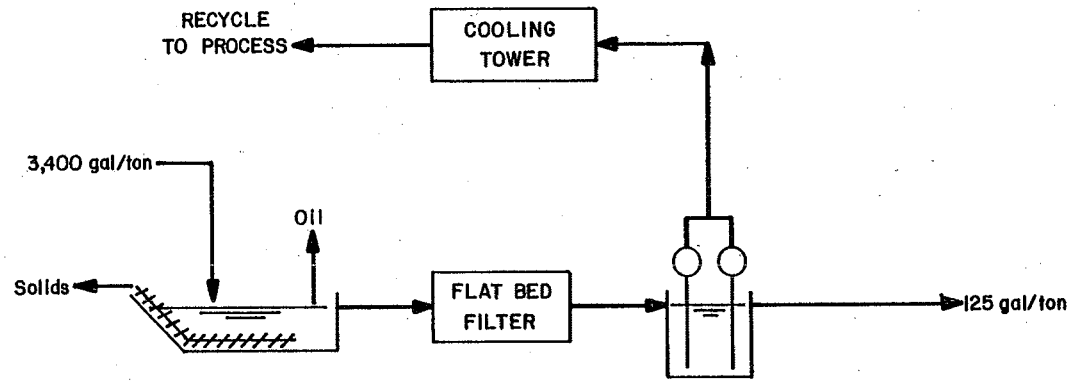

ENVIRONMENTAL PROTECTION AGENCY			
STEEL INDUSTRY STUDY CONTINUOUS CASTING SUBCATEGORY BPT MODEL			
Dwn 6/11/80			FIGURE IX-1

CONTINUOUS CASTING SUBCATEGORY

SECTION X

EFFLUENT QUALITY ATTAINABLE THROUGH THE APPLICATION OF THE BEST AVAILABLE TECHNOLOGY ECONOMICALLY ACHIEVABLE

Introduction

The Best Available Technology Economically Achievable (BAT) effluent limitations are to be achieved by July 1, 1984. BAT is determined by reviewing subcategory practices and identifying the best economically achievable control and treatment technologies employed within a subcategory. In addition, a technology that is readily transferable from another subcategory or industry may be identified as BAT.

This section identifies the model BAT flow rate, the three BAT alternative treatment systems, and the resulting effluent levels considered for continuous casting operations. The rationale for selecting the treatment technologies is also presented. Finally, this section addresses the Agency's selection of a BAT model treatment system to serve as the basis for the BAT limitations.

BAT Model Flow Rate

Reanalysis of the available data has shown that the BPT discharge flow of 125 gal/ton is much higher than the actual discharge flow demonstrated by the plants having technology similar to the model treatment technologies (i.e., primary scale pit with drag link conveyor and surface skimming, flat bed filter, recycle, and cooling towers). While the Agency is retaining a model BPT flow (which is less stringent than might be justified), it has set the model BAT flow at 25 gal/ton. Reference is made to Table IX-2 for the development of the model flow rate. The Agency considered data for those plants with blowdown flows up to 50 gal/ton. The Agency believes these plants are representative of plants with good water management practices in the subcategory. The Agency did not select zero discharge as the model flow for continuous casting operations because it does not believe zero discharge can be achieved at all plants. The Agency believes 25 gal/ton can be achieved at plants with existing recycle systems at little or no additional cost. The Agency believes that 25 gal/ton is a flow rate which can be achieved by well operated high rate recycle systems for continuous casting wastewaters. Plant responses indicated that fouling and scaling are not significant problems in continuous casting recycle systems.

Identification of BAT

Based upon information contained in Sections III through VIII, the Agency developed the following BAT alternative treatment systems (as

add-ons to the BPT model treatment system) for the continuous casting subcategory. These alternatives are illustrated in Figure VIII-1.

A. BAT Alternative 1

In the first BAT Alternative, the blowdown from the BPT system is filtered. Filtration is effective in removing those metals entrained in suspended solids. However, available data for continuous casting operations indicate that not all metals are in particulate form and pass through of dissolved metals occurs.

B. BAT Alternative 2

Lime precipitation and sedimentation of the BPT treatment system blowdown is used to remove both particulate and dissolved toxic metals.

C. BAT Alternative 3

In this alternative, vapor compression distillation is used to achieve zero discharge. The distillate quality condensate is returned to the process.

These treatment systems include technologies in use at one or more plants, or demonstrated in other wastewater treatment applications.

The BAT limitations are presented in Table X-1, along with the model flow and concentration basis. The pollutants listed in this table represent a condensation of the list of selected pollutants presented in Section VI. The Agency selected pollutants for limitation based upon the following factors: treatability using the technologies presented in the alternatives; quantity and toxicity in relation to the other process wastewater pollutants; the ability to serve as indicators of both the presence and the removal of other pollutants; and the applicability as a pollutant in a central treatment system with other compatible wastewaters.

Monitoring data indicate that zinc is present at higher levels than any of the other toxic pollutants found in continuous casting wastewaters. As noted in Volume I, treatment of those toxic pollutants found at high levels in the process wastewaters will result in treatment of the toxic pollutants found at lower levels. Based upon the observations noted above, the Agency selected zinc as the toxic pollutant to be limited at BAT. While other toxic metals are found in continuous casting wastewaters, the control of zinc will also result in comparable controls of the other toxic metals. In order to make the continuous casting limitations compatible with those for steelmaking and vacuum degassing, the Agency has also promulgated BAT limitations for lead and zinc.

Investment and annual costs for the BAT alternative treatment systems are presented in Table VIII-4.

Rationale for the Selection of the BAT Alternatives

The following discussion presents the rationale for selecting the BAT alternative treatment systems and for determining the effluent flow rates and concentration levels of the limited pollutants.

Treatment Scheme

The alternative treatment systems applied and discharge flow rates, of 3400 and 25 gal/ton, respectively, are based upon a system recycle rate of 99.3 percent. Table IX-2 summarizes current applied and discharge flow rates of continuous casting operations for which flow data were provided. The average of the applied flows was 3381 gal/ton. The model discharge flow was set at 25 gal/ton. The Agency believes this discharge flow is achievable at all continuous casting operations and represents good operation of properly designed high rate recycle systems for continuous casting wastewaters. This flow is well demonstrated in this subcategory. In fact, zero discharge has been reported for several plants. The Agency has not selected zero discharge as the BAT flow because it believes that zero discharge cannot be universally achieved without the use of costly evaporative technologies.

Filtration is included in the first BAT alternative treatment system in order to reduce the discharge of particulate metals entrained in suspended solids in the BPT system blowdown. Twelve of the thirty-nine plants for which treatment system information was provided have filters. Many of these, however, are installed to filter the entire process flow at higher filtration rates and with different media than would be used to filter a small blowdown. Filtration is also used in other steel industry subcategories and in other industries for the removal of suspended particulates from wastewater streams.

Since the data presented in Section VII indicate that filtration is not particularly effective in removing dissolved toxic metals, the Agency has also investigated the use of lime precipitation and sedimentation to control both particulate and dissolved toxic metals. The Agency did not consider this technology in developing the proposed BAT limitations. Upon close review of available data in response to public comments, the Agency believes this technology is an appropriate option for the control of toxic metals found in continuous casting wastewaters. Lime precipitation and sedimentation technology is well demonstrated in the steel industry and in the continuous casting subcategory.

Although vapor compression distillation is not used in this subcategory, the effectiveness of this treatment technology has been demonstrated in pilot studies and in wastewater treatment applications in other industries.

Wastewater Quality

The average effluent concentrations (in mg/l) incorporated in each BAT alternative treatment system follow (the maximum values are enclosed in parentheses).

Pollutant	BAT Alt. 1	BAT Alt. 2	BAT Alt. 3
Lead	0.1 (0.3)	0.3 (0.9)	Zero Discharge
Zinc	0.7 (2.1)	0.45 (1.35)	Zero Discharge

Toxic Metal Pollutants

A. BAT Alternative 1

To determine the effluent concentrations for the toxic metal pollutants, the Agency evaluated analytical data from a variety of sources. Long-term filtration system effluent data for hot forming operations were reviewed to determine the toxic metal removal capabilities of filtration systems. Reference is made to Volume I, Appendix A, for the derivation of 30 day average and daily maximum performance standards. However, sampled plant filtration data available for continuous casting operations indicate that toxic metals are not removed to the same degree, principally because some of the toxic metals found in continuous casting wastewaters are dissolved. Thus, the effluent concentrations presented above are higher than those shown in Appendix A for hot forming operations.

B. BAT Alternative 2

Performance data for lime precipitation systems for steelmaking wastewaters are presented in Table A-48 of Appendix A. These performance data were obtained for wastewaters that are more highly contaminated with particulate and dissolved toxic metals than are continuous casting wastewaters. Thus, the performance data for steelmaking wastewaters are applicable to continuous casting wastewaters. Also shown below are performance data for a full scale recycle and sedimentation system for continuous casting, vacuum degassing, and hot forming wastewaters (Plant 0684E). The untreated continuous casting and vacuum degassing wastewaters at this plant comprise about one half of the wastewaters treated in the central treatment facility at this plant.

Pollutant	Number of Observations	Average
Suspended Solids	159	20 mg/l
Lead	26	0.061
Zinc	26	0.323

Based upon the steelmaking data and the data presented above, the Agency established the 30 day average model plant effluent concentrations at 0.30 mg/l and 0.45 mg/l for lead and zinc, respectively.

B. BAT Alternative 3

As noted previously in this section, BAT Alternative 3 includes a vapor compression distillation system to achieve zero discharge.

Effluent Limitations for BAT Alternatives

The effluent limitations for the BAT alternative treatment systems were calculated by multiplying the model effluent flow and the corresponding concentrations of metals with appropriate conversion factors. Table X-1 presents the effluent limitations developed for each treatment alternative.

Selection of a BAT Alternative

The Agency selected BAT Alternative 2 as the BAT model treatment system upon which the proposed BAT limitations are based. Filtration was found not to be effective for removing toxic metals from continuous casting wastewaters, while lime precipitation can remove both particulate and dissolved toxic metals. The second alternative was also selected to facilitate central treatment of continuous casting, vacuum degassing and steelmaking wastewaters. The model BAT treatment technologies and model plant effluent quality are the same for all of these operations. Table X-2 presents the BAT limitations for continuous casting operations. Vapor compression distillation was not selected on the basis of high costs and limited incremental toxic pollutant removal over lime precipitation.

Demonstration of BAT Limitations

Table X-2 presents a list of those plants achieving the BAT limitations for continuous casting operations with the model treatment technology. The Agency believes these plants are representative of the wastewater treatment performance achievable by the industry. Moreover, about 40 percent of the industry is achieving the BAT limitations by operating with no discharge from the BPT treatment system and without plugging, fouling and scaling problems.

TABLE X-1
BAT EFFLUENT LIMITATIONS GUIDELINES
CONTINUOUS CASTING SUBCATEGORY

		BAT ALTERNATIVE 1		BAT ALTERNATIVE 2*		BAT ALTERNATIVE 3(1)	
		CONCENTRATION BASIS (mg/l)	EFFLUENT LIMITATIONS (kg/kkg of product)	CONCENTRATION BASIS (mg/l)	EFFLUENT LIMITATIONS (kg/kkg of product)	CONCENTRATION BASIS (mg/l)	EFFLUENT LIMITATIONS (kg/kkg of product)
DISCHARGE FLOW (gal/ton)		25	—	25	—	0	—
LEAD	AVE.	0.1	0.0000104	0.3	0.0000313	—	—
	MAX.	0.3	0.0000313	0.9	0.0000939	—	—
ZINC	AVE	0.7	0.0000730	0.45	0.0000469	—	—
	MAX.	2.1	0.000219	1.35	0.000141	—	—

* Selected BAT alternative
(1) BAT alternative 3 achieves zero discharge

TABLE X-2

JUSTIFICATION OF BAT EFFLUENT LIMITATIONS[1]
CONTINUOUS CASTING SUBCATEGORY

	Discharge Flow (gal/ton)	Lead	Zinc	C&TT Components
BAT	25	0.0000313	0.0000469	PSP, SS, FF, CT, RTP 99.3, NL, TP, NA
Plants				
AF (0868B)	17	0.000030	-	PSP, SS, FDSP, CT, RTP 98.9
D (0248B)	Zero Discharge	0	0	CL, FP, RTP 100
Q (Unk)	Zero Discharge	0	0	PSP, CT, RTP 100
071 (0284A)	Zero Discharge	0	0	PSP, FSP, T, CT, RTP 100
072 (0496)	Zero Discharge	0	0	PSP, FDSP, CT, RTP 100
079 (0060K)	25	0.0000073	0.000021	PSP, FF, CT, RTP 99.2

(1) Kg/kkg of product

- : The limitation is not supported with data from this plant.

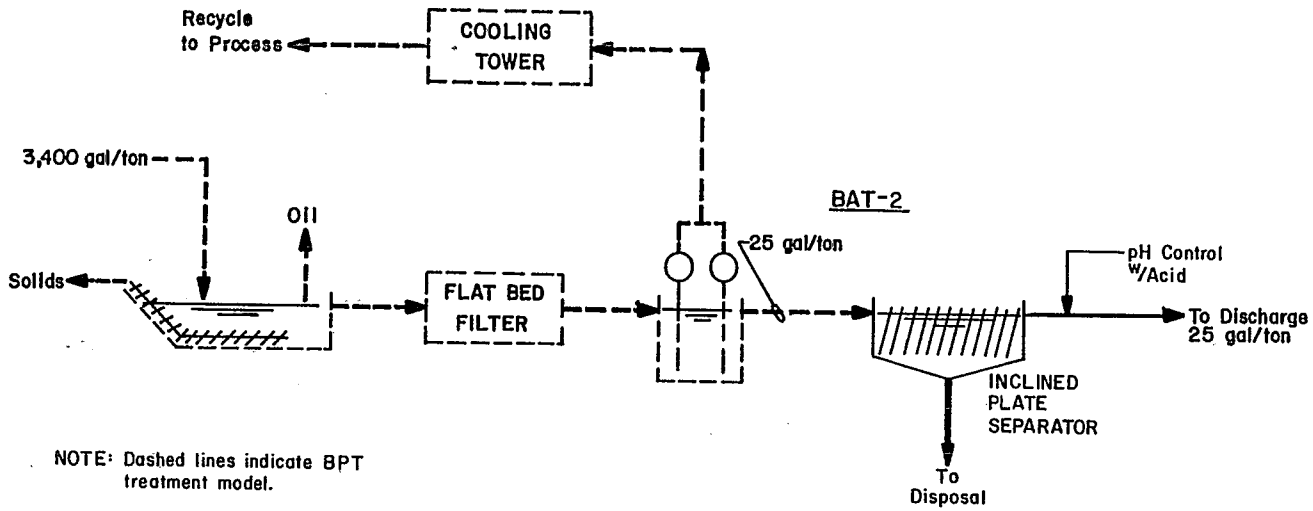

NOTE: Dashed lines indicate BPT treatment model.

ENVIRONMENTAL PROTECTION AGENCY			
STEEL INDUSTRY STUDY CONTINUOUS CASTING SUBCATEGORY BAT TREATMENT MODEL			
Dwn.6/11/80			FIGURE X-1

CONTINUOUS CASTING SUBCATEGORY

SECTION XI

BEST CONVENTIONAL POLLUTANT CONTROL TECHNOLOGY

Introduction

The 1977 Amendments added Section 301(b)(2)(E) to the Act, establishing "best conventional pollutant control technology" (BCT) for discharges of conventional pollutants from existing industrial point sources. Conventional pollutants are those defined in Section 304(a)(4) biochemical oxygen demanding pollutants (BOD5), total suspended solids (TSS), fecal coliform, and pH and any additional pollutants defined by the Administrator as "conventional" oil and grease, (44 FR 44501, July 30, 1979).

BCT is not an additional limitation but replaces BAT for the control of conventional pollutants. In addition to other factors specified in Section 304(b)(4)(B), the Act requires that BCT limitations be assessed in light of a two part "cost-reasonableness" test. American Paper Institute v. EPA, 660 F.2d 954 (4th Cir. 1981). The first test compares the cost for private industry to reduce its conventional pollutants with the costs to publicly owned treatment works for similar levels of reduction in their discharge of these pollutants. The second test examines the cost-effectiveness of additional industrial treatment beyond BPT. EPA must find that limitations are "reasonable" under both tests before establishing them as BCT. In no case may BCT be less stringent than BPT.

EPA published its methodology for carrying out the BCT analysis on August 29, 1979 (44 FR 50732). In the case mentioned above, the Court of Appeals ordered EPA to correct data errors underlying EPA's calculation of the first test, and to apply the second cost test. (EPA has argued that a second cost test was not required.)

EPA has determined that the BAT technology is capable of removing significant amounts of conventional pollutants. However, EPA has not yet proposed or promulgated a revised BCT methodology in response to the American Paper Institute v. EPA decision mentioned earlier. Thus, it is not now possible to apply the BCT cost test to this technology option. Accordingly, EPA is deferring a decision on the appropriate BCT limitations until EPA proposes the revised BCT methodology.

CONTINUOUS CASTING SUBCATEGORY

SECTION XII

EFFLUENT QUALITY ATTAINABLE THROUGH THE APPLICATION OF NEW SOURCE PERFORMANCE STANDARDS

Introduction

New Source Performance Standards (NSPS), which must be achieved by new sources, are to specify the degree of effluent reduction achievable through the application of the Best Available Demonstrated Control Technology (BDT), including, where applicable, a standard permitting no discharge of pollutants. This section identifies the treatment alternatives considered by the Agency for NSPS and the resulting effluent standards. In addition, the rationale for selecting the NSPS model treatment system, flow values, and effluent standards are presented.

Identification of NSPS

A. NSPS Alternative 1

NSPS treatment Alternative 1 (illustrated in Figure XII-1), is similar to the BPT model and BAT-1 treatment component discussed in Sections IX and X. In this system, process wastewaters are treated initially by a scale pit equipped with a drag link conveyor and oil removal facilities. The scale pit effluent is then delivered to a pressure filter. Approximately 99% of the filter effluent is returned to the process through a cooling tower. The remaining 25 gal/ton of the filter effluent is discharged to a receiving stream. Note that this model differs from the BPT model in that a pressure filter is used to treat the entire flow rather than a flat bed filter. Thus, the blowdown filter included in BAT-1 is not necessary.

C. NSPS Alternative 2

This alternative includes lime precipitation and sedimentation of the blowdown from Alternative 1 to remove dissolved and particulate toxic metals passing through the full flow filter.

D. NSPS Alternative 3

NSPS Alternative 3 incorporates the same treatment components as BAT Alternative 3, i.e. a vapor compression distillation step and recycle to achieve zero discharge. Refer to Figure VIII-2.

Rationale for Selection of NSPS

The NSPS alternatives for the continuous casting subcategory are similar to the BPT and BAT treatment systems described in Sections IX and X. Therefore, the rationale presented in those sections is applicable to NSPS and is not repeated. The NSPS treatment alternatives for continuous casting operations are addressed below:

Treatment Systems

As noted in Section X, the use of filtration is well demonstrated, not only within the steel industry, but also within the continuous casting subcategory. Most newer continuous casting operations have installed full flow pressure filter systems in place of flat bed filters. Thus, full flow pressure filters were included in the NSPS model treatment systems. With the exception of vapor compression distillation, the other treatment technologies are also well demonstrated within the continuous casting subcategory. The resulting effluent wastewater quality for the NSPS alternatives is presented in Table XII-1. As noted in Section X, effluent levels of the limited pollutants were based upon the capabilities of the various wastewater treatment technologies. The pollutants listed in Table XII-1 include only those pollutants for which BAT limitations have been promulgated (refer to Section X for the factors considered in selecting these pollutants).

Model Flow Rates

The applied and discharge flows developed for BAT are applicable to the NSPS alternatives as well. The recycle rate of 99.3%, defined by the applied and discharge flows, is well demonstrated in the continuous casting subcategory as is the discharge flow of 25 gallons/ton. The Agency did not select zero discharge as the NSPS model treatment system flow rate, because the Agency believes this flow can be universally achieved only with costly evaporative technologies.

Selection of NSPS Alternative

NSPS Alternative 2 has been selected as the NSPS model treatment system upon which NSPS are based. Vapor compression distillation technology is not demonstrated in this subcategory, and filtration systems will not remove dissolved metals from continuous casting wastewaters.

The NSPS are presented in Table XII-1 in the column for the second NSPS treatment alternative. As noted above, the Agency also considered establishing NSPS at zero discharge based upon the demonstrated performance of several plants in the subcategory. However, zero discharge was not established, because the Agency believes that zero discharge can be achieved throughout the industry only with the use of costly evaporative technologies.

Demonstration of NSPS

Table XII-2 presents a list of those plants that demonstrate the NSPS.

TABLE XII-1
NEW SOURCE PERFORMANCE STANDARDS
CONTINUOUS CASTING SUBCATEGORY

		NSPS ALTERNATIVE 1		NSPS ALTERNATIVE 2*		NSPS ALTERNATIVE 3(1)	
		CONCENTRATION BASIS (mg/l)	EFFLUENT STANDARDS (kg/kkg of product)	CONCENTRATION BASIS (mg/l)	EFFLUENT STANDARDS (kg/kkg of product)	CONCENTRATION BASIS (mg/l)	EFFLUENT STANDARDS (kg/kkg of product)
DISCHARGE FLOW (gal/ton)		25	—	25	—	0	—
TOTAL SUSPENDED SOLIDS	AVE.	15	0.00156	25	0.00261	—	—
	MAX.	40	0.00417	70	0.00730	—	—
OIL AND GREASE	AVE.	—	—	10	0.00104	—	—
	MAX.	10	0.00104	30	0.00313	—	—
pH		Within the range 6.0 to 9.0				—	
LEAD	AVE.	0.1	0.0000104	0.3	0.0000313	—	—
	MAX.	0.3	0.0000313	0.9	0.0000939	—	—
ZINC	AVE	0.7	0.0000730	0.45	0.0000469	—	—
	MAX.	2.1	0.000219	1.35	0.000141	—	—

* Selected NSPS alternative
(1) NSPS alternative 3 achieves zero discharge

TABLE XII-2

JUSTIFICATION OF NSPS EFFLUENT STANDARDS[1]
CONTINUOUS CASTING SUBCATEGORY

	Discharge Flow (gal/ton)	pH, Units	Oil & Grease	TSS	Lead	Zinc	C&TT Components
NSPS	25	6.0 to 9.0	0.00104	0.00261	0.0000313	0.0000469	PSP, SS, FP, CT, RTP 99.3, NL, TP, NA
Plants							
AF (0868B)	17	6.8	0.000035	0.0016	0.000030	-	PSP, SS, FDSP, CT, RPT 98.9
D (0248B)	Zero Discharge	*	0	0	0	0	CL, FP, RTP 100
Q (Unk)	Zero Discharge	8.9	0	0	0	0	PSP, CT, RTP 100
071 (0284A)	Zero Discharge	9.4	0	0	0	0	PSP, FSP, CT, RTP 100
072 (0496)	Zero Discharge	7.6-8.1	0	0	0	0	PSP, FDSP, CT, RTP 100
079 (0060K)	25	7.1-7.2	-	-	0.0000073	0.000021	PSP, FF, CT, RTP 99.2

*Insufficient data

(1) Kg/kkg of product

- : The standard is not supported with data from this plant.

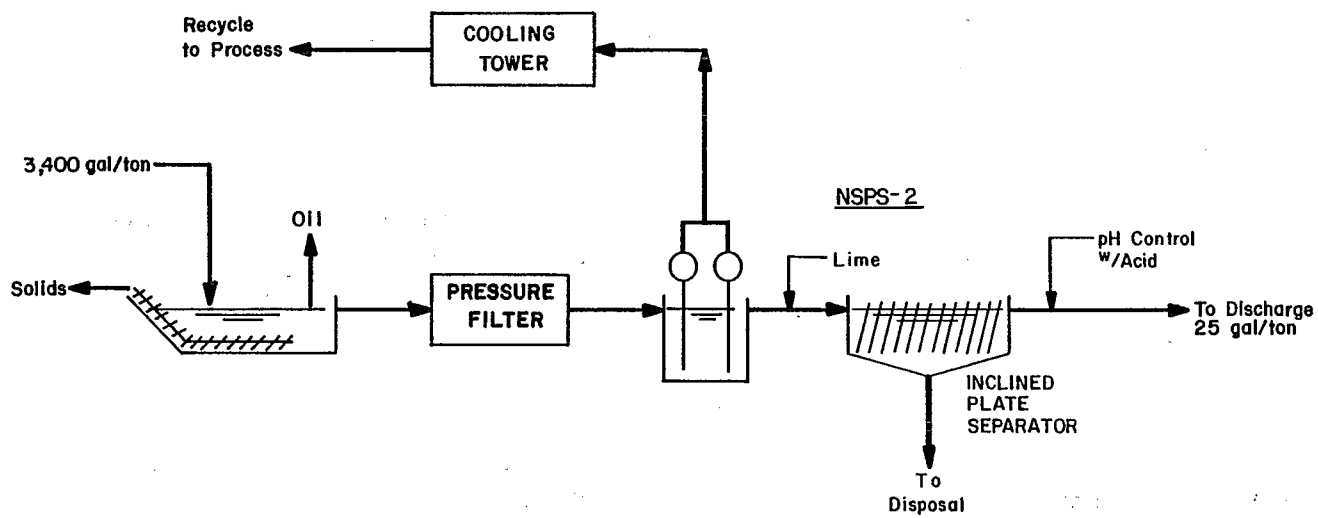

ENVIRONMENTAL PROTECTION AGENCY

STEEL INDUSTRY STUDY
CONTINUOUS CASTING SUBCATEGORY
NSPS TREATMENT MODEL

Dwn. 6/11/80

FIGURE XII-1

CONTINUOUS CASTING SUBCATEGORY

SECTION XIII

PRETREATMENT STANDARDS FOR THE DISCHARGES TO PUBLICLY OWNED TREATMENT WORKS

Introduction

This section presents alternative pretreatment systems for continuous casting operations with discharges to publicly owned treatment works (POTWs). Wastewaters from seven continuous casting operations are discharged to POTWs.

The general pretreatment and categorical pretreatment standards applying to continuous casting operations are reviewed below.

General Pretreatment Standards

For detailed information concerning Pretreatment Standards, refer to 46 FR 9404 et seq, "General Pretreatment Regulations for Existing and New Sources of Pollution," (January 28, 1981). See also 47 FR 4518 (February 1, 1982). In particular, 40 CFR Part 403 describes national standards (prohibited and categorical standards), revision of categorical standards through removal allowances, and POTW pretreatment programs.

In establishing pretreatment standards for continuous casting operations, the Agency considered the objectives and requirements of the General Pretreatment Regulations. The Agency determined that uncontrolled discharges of continuous casting wastewaters to POTWs would result in pass through of toxic pollutants.

Alternative Pretreatment Systems

The four alternative pretreatment models for existing sources are identical to the BPT and BAT treatment models discussed in Sections IX and X, with the exception of the final acid neutralization component. Refer to Sections IX and X for descriptions and justifications of these model treatment systems. The three PSNS model treatment systems are the same as the NSPS model treatment systems identified in Section XII.

Selection of a Pretreatment Alternative

The pretreatment alternatives described above are designed to control toxic metals, and thus are designed to minimize pass through of these pollutants at POTWs which may receive continuous casting wastewaters. The pretreatment alternatives accomplish between 96.3 percent and 100 percent removal of the toxic metal pollutants limited at BAT.

PSES Alternative 3 and PSNS Alternative 2 were selected as the basis for the promulgated PSES and PSNS, respectively. These alternatives are the same as the selected BAT and NSPS alternatives for continuous casting operations. These alternatives provide for the greatest removal of toxic metals without the high costs associated with evaporative technologies. The other PSES and PSNS alternatives do not control the discharge of dissolved toxic metals found in continuous casting wastewaters. The removal rates of toxic metals from untreated vacuum degassing wastewaters for PSES Alternative 3 and PSNS Alternative 2 are compared to the POTW removal rates for those metals:

	PSES/PSNS Model	Actual POTW
Lead	99.3%	48%
Zinc	99.6%	65%

As shown above, the selected PSES and PSNS alternative will prevent pass through of toxic metals at POTWs to a significantly greater degree than would occur if continuous casting wastewaters were discharged untreated to POTWs. The achievability of these standards is reviewed in Sections IX, X, and XII. The model treatment system is depicted in Figure XIII-1 and the PSES and PSNS are presented in Table XIII-1.

TABLE XIII-1
PRETREATMENT EFFLUENT STANDARDS FOR EXISTING SOURCES
CONTINUOUS CASTING SUBCATEGORY

		PSES ALTERNATIVE 1		PSES ALTERNATIVE 2		PSES ALTERNATIVE 3*		PSES ALTERNATIVE 4(I)	
		CONCENTRATION BASIS (mg/l)	EFFLUENT STANDARDS (kg/kkg of Product)	CONCENTRATION BASIS (mg/l)	EFFLUENT STANDARDS (kg/kkg of Product)	CONCENTRATION BASIS (mg/l)	EFFLUENT STANDARDS (kg/kkg of Product)	CONCENTRATION BASIS (mg/l)	EFFLUENT STANDARDS (kg/kkg of Product)
DISCHARGE FLOW (gal/ton)		125	—	25	—	25	—	0	—
LEAD	Ave.	0.1	0.0000521	0.1	0.0000104	0.3	0.0000313	—	—
	Max.	0.3	0.000156	0.3	0.0000313	0.9	0.0000939	—	—
ZINC	Ave.	0.7	0.000365	0.7	0.0000730	0.45	0.0000469	—	—
	Max.	2.1	0.00109	2.1	0.000219	1.35	0.000141	—	—

* Selected PSES alternative

(I) PSES alternative 4 achieves zero discharge.

TABLE XIII-2
PRETREATMENT EFFLUENT STANDARDS FOR NEW SOURCES
CONTINUOUS CASTING SUBCATEGORY

		PSNS ALTERNATIVE 1		PSNS ALTERNATIVE 2*		PSNS ALTERNATIVE 3(1)	
		CONCENTRATION BASIS (mg/l)	EFFLUENT STANDARDS (kg/kkg of product)	CONCENTRATION BASIS (mg/l)	EFFLUENT STANDARDS (kg/kkg of product)	CONCENTRATION BASIS (mg/l)	EFFLUENT STANDARDS (kg/kkg of product)
DISCHARGE FLOW (gal/ton)		2.5	———	25	———	0	———
LEAD	Ave.	0.1	0.0000104	0.3	0.0000313	———	———
	Max.	0.3	0.0000313	0.9	0.0000939	———	———
ZINC	Ave.	0.7	0.0000730	0.45	0.0000469	———	———
	Max.	2.1	0.000219	1.35	0.000141	———	———

* Selected PSNS alternative
(1) PSNS alternative 3 achieves zero discharge

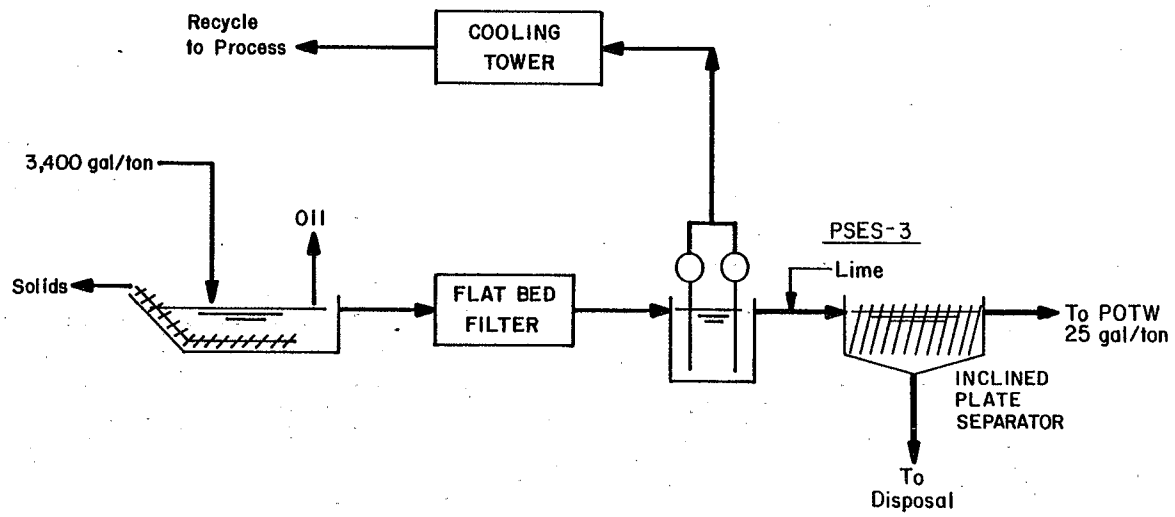

ENVIRONMENTAL PROTECTION AGENCY			
STEEL INDUSTRY STUDY CONTINUOUS CASTING SUBCATEGORY PSES TREATMENT MODEL			
Dwn. 6/11/80			FIGURE XIII-1

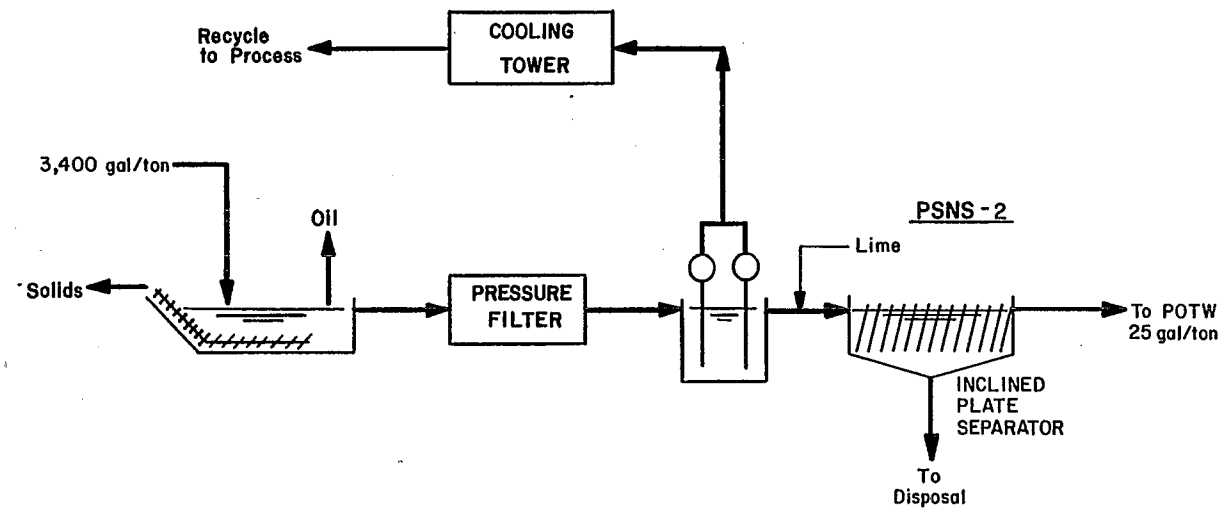

ENVIRONMENTAL PROTECTION AGENCY

STEEL INDUSTRY STUDY

CONTINUOUS CASTING SUBCATEGORY

PSNS TREATMENT MODEL

Dwn.11/17/81

FIGURE XIII-2

☆U.S. GOVERNMENT PRINTING OFFICE: 1982-361-085:4453

United States
Environmental Protection
Agency

Washington DC 20460

Official Business
Penalty for Private Use
$300

Special Fourth Class Rate
Book
Postage and Fees Paid
EPA
Permit No. G-35