United States Environmental Protection Agency
Office of Water (WH-552)
EPA 440/1-89-025
August 1989

EPA

Preliminary Data Summary For The Pulp, Paper And Paperboard Point Source Category

PRELIMINARY DATA SUMMARY
FOR THE
PULP, PAPER AND PAPERBOARD
POINT SOURCE CATEGORY

Office of Water Regulations and Standards
Office of Water
United States Environmental Protection Agency
Washington, D.C.

August 1989

PREFACE

This is one of a series of Preliminary Data Summaries prepared by the Office of Water Regulations and Standards of the U.S. Environmental Protection Agency. The Summaries contain engineering, economic and environmental data that pertain to whether the industrial facilities in various industries discharge pollutants in their wastewaters and whether the EPA should pursue regulations to control such discharges. The summaries were prepared in order to allow EPA to respond to the mandate of section 304(m) of the Clean Water Act, which requires the Agency to develop plans to regulate industrial categories that contribute to pollution of the Nation's surface waters.

The Summaries vary in terms of the amount and nature of the data presented. This variation reflects several factors, including the overall size of the category (number of dischargers), the amount of sampling and analytical work performed by EPA in developing the Summary, the amount of relevant secondary data that exists for the various categories, whether the industry had been the subject of previous studies (by EPA or other parties), and whether or not the Agency was already committed to a regulation for the industry. With respect to the last factor, the pattern is for categories that are already the subject of regulatory activity (e.g., Pesticides, Pulp and Paper) to have relatively short Summaries. This is because the Summaries are intended primarily to assist EPA management in designating industry categories for rulemaking. Summaries for categories already subject to rulemaking were developed for comparison purposes and contain only the minimal amount of data needed to provide some perspective on the relative magnitude of the pollution problems created across the categories.

The Preliminary Data Summary for the Pulp, Paper and Paperboard Point Source category is a collection of four documents:

1. Overview of the United States Pulp, Paper and Paperboard Industry and Production Processes. October 1987.

2. U.S.EPA / Paper Industry Cooperative Dioxin Screening Study. March 1988.

3. Statement of Martha G. Prothro, Director, Office of Water Regulations and Standards, before the Subcommittee on Water Resources of the Committee on Public Works and Transportation, U.S. House of Representatives. July 13, 1988.

4. U.S. EPA / Paper Industry Cooperative Dioxin Study: Analytical Results. June 16, 1989.

Persons interested in obtaining additional copies of this summary may write to the following address:

Industrial Technology Division
WH-552
U.S. Environmental Protection Agency
401 M Street, S.W.
Washington, D.C. 20460

Telephone (202) 382-7131

OVERVIEW OF THE UNITED STATES PULP, PAPER, AND PAPERBOARD INDUSTRY AND PRODUCTION PROCESSES

presented to
U.S. ENVIRONMENTAL PROTECTION AGENCY

by
E.C. JORDAN CO.

OCTOBER 1987

OUTLINE OF PRESENTATION

1. GENERAL INFORMATION ON THE INDUSTRY
2. GENERAL UNDERSTANDING OF THE PROCESSES
3. REVIEW OF TYPICAL KRAFT BLEACHING PROCESSES
4. DISCUSSION OF OTHER PROCESSES UTILIZING
5. DISCUSSION OF ALTERNATIVE BLEACHING PROCESS
   CHLORINE OR BLEACHED PULPS

INDUSTRY SUBCATEGORIZATION

- 3 MAJOR SEGMENTS
  - INTEGRATED
  - SECONDARY FIBER
  - NONINTEGRATED
- 24 SUBCATEGORIES
  - PROCESSES
  - PRODUCTS

INTEGRATED PULP AND PAPER MILLS

- PREPARES OWN PULP FROM WOOD, LOGS, OR CHIPS
- COOKS AND/OR BLEACHES PULP(S) FOR USE ON THE PAPER MACHINE(S) OR PULP DRYER
- BLENDS PULP(S) AND PURCHASED PULP(S) FOR DESIRED PAPER PROPERTIES
- MAKES PRODUCT ON PULP DRYER OR PAPER MACHINE
- PRODUCTS INCLUDE:
  - BUSINESS PAPERS
  - BOOK PAPERS
  - MAGAZINE PAPERS
  - NEWSPRINT
  - UNBLEACHED BOARD
  - BLEACHED BOARD

SECONDARY FIBER PULP AND PAPER MILLS

- PURCHASES WASTE PAPER AS MAJOR FIBER SOURCE
- USUALLY PURCHASES PULPS FROM OTHER MILLS TO BLEND FOR DESIRED PAPER PROPERTIES
- WASTEPAPER MAY BE MILDLY COOKED TO SEPARATE FIBERS
- SOME PRODUCTS WILL REQUIRE BLEACHED FIBER SO A SEPARATE BLEACHING SYSTEM MAY BE USED. TYPICALLY, THIS IS A ONE OR TWO STAGE SYSTEM, I.E.: H, OR CH
- MAKE PRODUCT ON A PAPER MACHINE OR OTHER FORMER
- MAJOR PRODUCTS MAY INCLUDE:
  - TISSUE
  - NEWS
  - PRINTING GRADES
  - BOARD GRADES
  - MOLDED PRODUCTS

NON-INTEGRATED PAPER MILLS

- PURCHASES PULPS
- BLENDS SELECTED PULPS FOR DESIRED PAPER PROPERTIES
- MAKES PRODUCT(S) ON PAPER MACHINES
- PRODUCTS INCLUDE PRIMARILY:
  - HIGH QUALITY FINE PAPERS
  - SPECIALTY GRADES
  - TISSUE

APPROXIMATE DISTRIBUTION AND PRODUCTION OF MILLS BY SEGMENT
(c. 1976)

	NUMBER OF FACILITIES	PRODUCTION (TONS/DAY)
INTEGRATED		
KRAFT		
BLEACHED	45	37012
UNBLEACHED	40	46668
SEMI-CHEMICAL	20	10173
SULFITE	22	8560
GROUNDWOOD	17	8237
MISCELLANEOUS	94	56248
SECONDARY FIBER		
DEINK	25	5870
OTHER	294	34025
MISCELLANEOUS	22	3785
NONINTEGRATED	161	17770

FACILITY LIST

Subcategory	Number of Plants	Method of Discharge: Direct	Indirect	Indirect w/ Primary	Indirect & Direct	Self-Contained	Unknown
Integrated Segment							
Dissolving Kraft	3	3	-	-	-	-	-
Market Bleached Kraft	13	12	-	-	-	-	1
BCT Bleached Kraft	9	9	-	-	-	-	-
Alkaline-Fine[1]	20	16	3	1	-	-	-
Unbleached Kraft							
o Linerboard	17	16	1	-	-	-	-
o Bag	11	11	-	-	-	-	-
Semi-Chemical	20	18	-	2	-	-	-
Unbleached Kraft and Semi-Chemical	11	9	1	-	-	-	1
Dissolving Sulfite Pulp	6	6	-	-	-	-	-
Papergrade Sulfite[2]	14	11	-	-	3	-	-
Groundwood-Thermo-Mechanical	4	3	-	-	-	-	1
Groundwood-CMN Papers	4	2	2	-	-	-	-
Groundwood-Fine Papers	9	7	2	-	-	-	-
Integrated Miscellaneous	89	62	15	1	7	3	1
Secondary Fibers Segment							
Deink							
o Fine	5	3	1	1	-	-	-
o Newsprint	4	1	3	-	-	-	-
o Tissue	16	11	3	-	1	1	-
Tissue From Wastepaper	19	10	2	1	-	6	-
Paperboard From Wastepaper	152	40	72	16	-	19	5
Wastepaper-Molded Products	15	4	8	-	-	1	2
Builders' Paper and Roofing Felt	60	4	29	5	-	18	4
Secondary Fibers Miscellaneous	22	7	9	3	1	-	2
Nonintegrated Segment							
Nonintegrated-Fine Papers							
o Wood Fiber Furnish	33	13	9	4	2	3	2
o Cotton Fiber Furnish	7	2	3	-	2	-	-
Nonintegrated-Tissue Papers	25	12	11	2	-	-	-
Nonintegrated-Lightweight Papers							
o Lightweight Papers	11	9	-	-	2	-	-
o Electrical Papers	5	3	2	-	-	-	-
Nonintegrated-Filter and Nonwoven Papers	14	5	7	2	-	-	-
Nonintegrated-Paperboard	16	6	10	-	-	-	-
Nonintegrated Miscellaneous	40	23	9	3	-	5	-
TOTAL	674	338	202	41	18	56	19

[1] Includes Fine Bleached Kraft and Soda subcategories.
[2] Includes Papergrade Sulfite (Blow Pit Wash) and Papergrade Sulfite (Drum Wash) subcategories

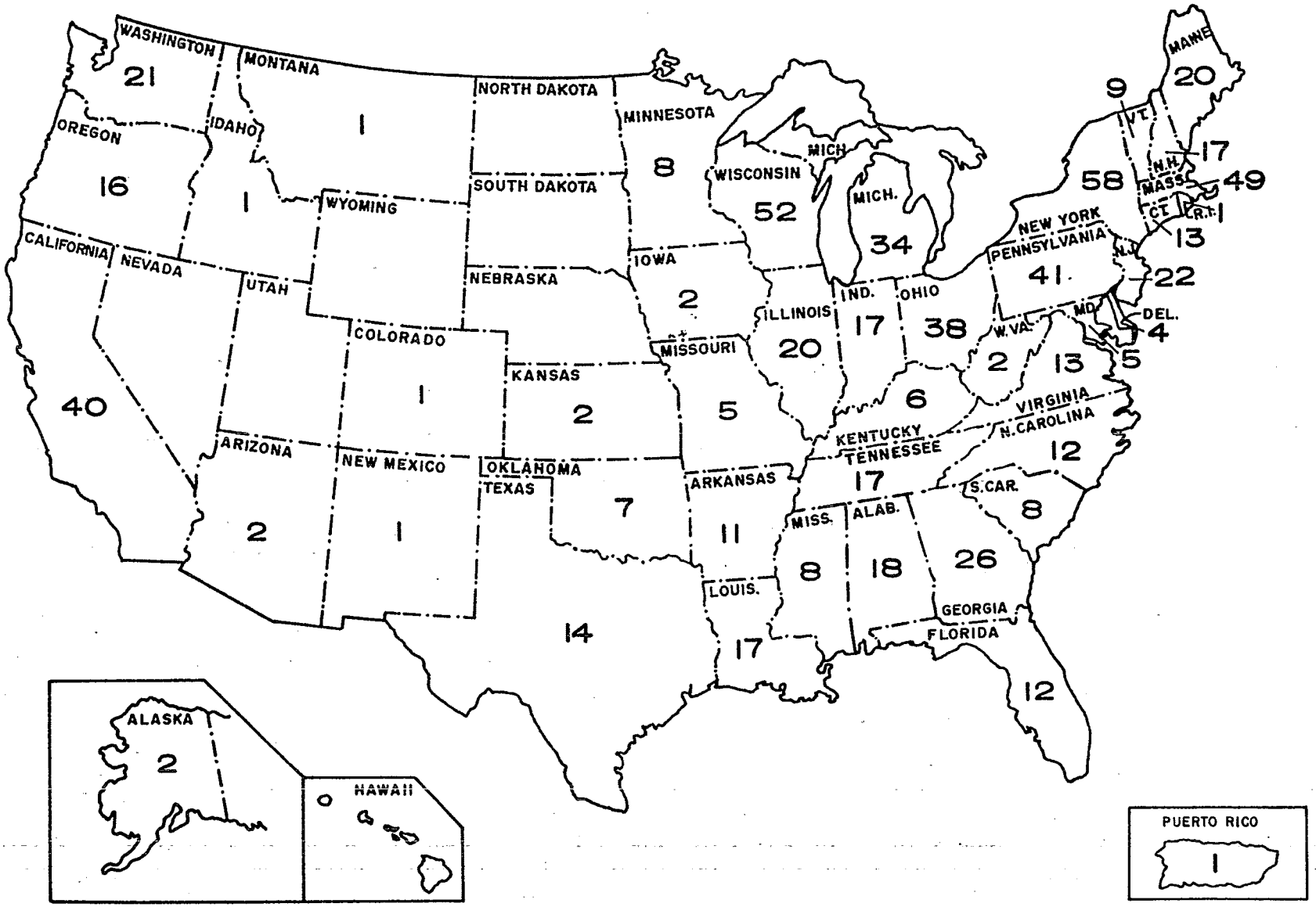

LOCATION OF OPERATING MILLS IN THE INDUSTRY (c. 1982)

SIMPLIFIED FLOW DIAGRAM
BLEACHED KRAFT PULPING PROCESS

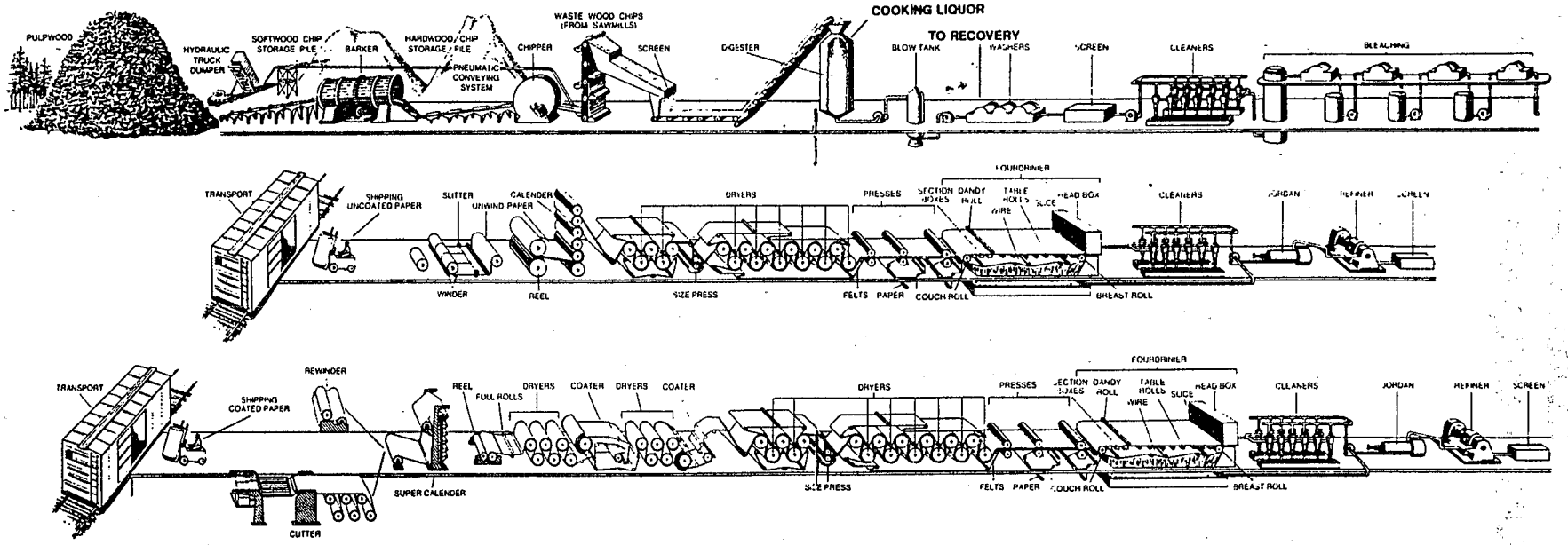

GENERAL FLOW SHEET
PULPING AND PAPERMAKING PROCESS

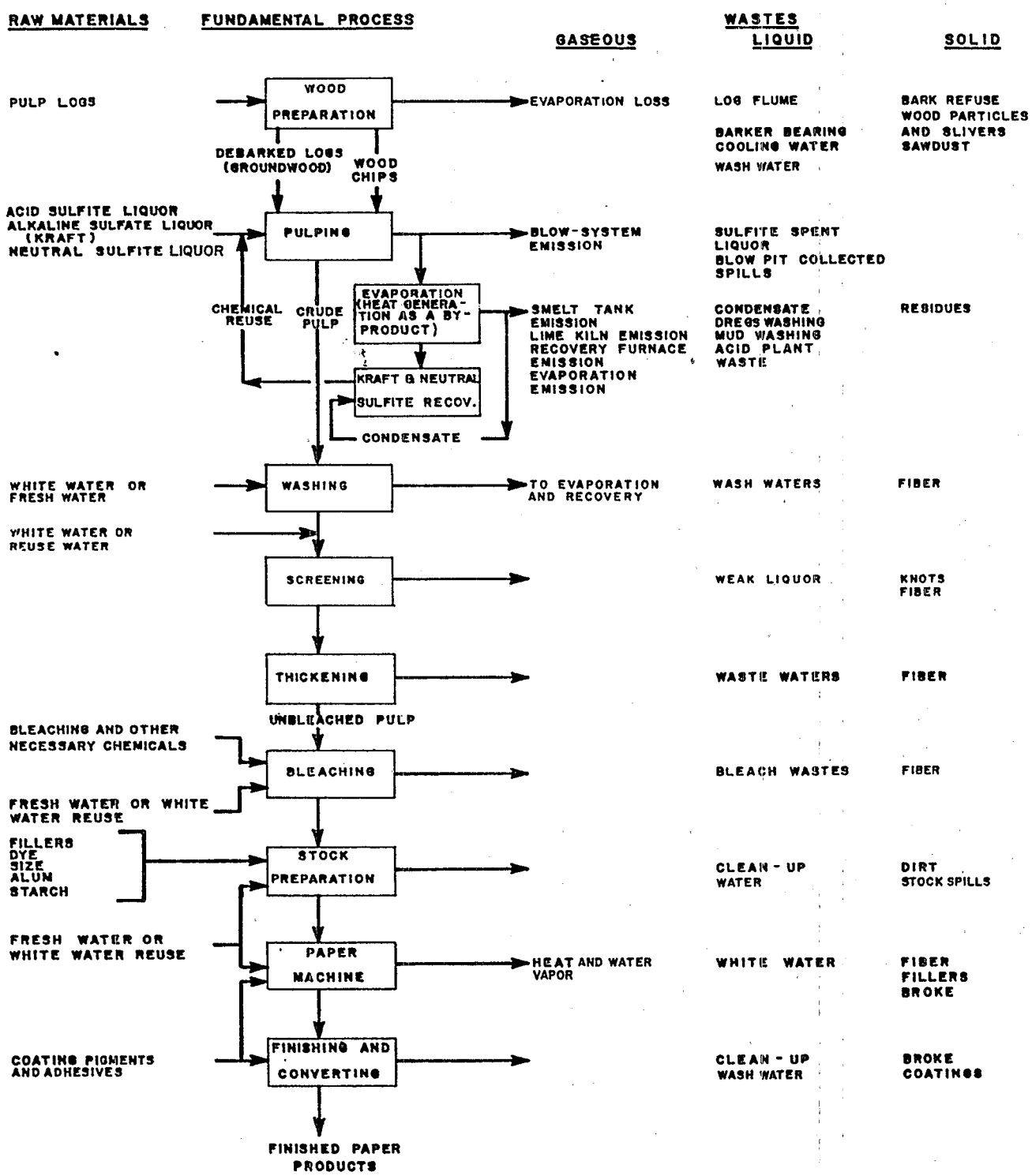

TYPICAL KRAFT

BLEACHING SEQUENCES

CEHD

CEHDP

CEHED

CEDED

CEHDED

WHERE:

C - CHLORINE

E - SODIUM HYDROXIDE

H - HYPOCHLORITE

D - CHLORINE DIOXIDE

O - OXYGEN

P - PEROXIDE

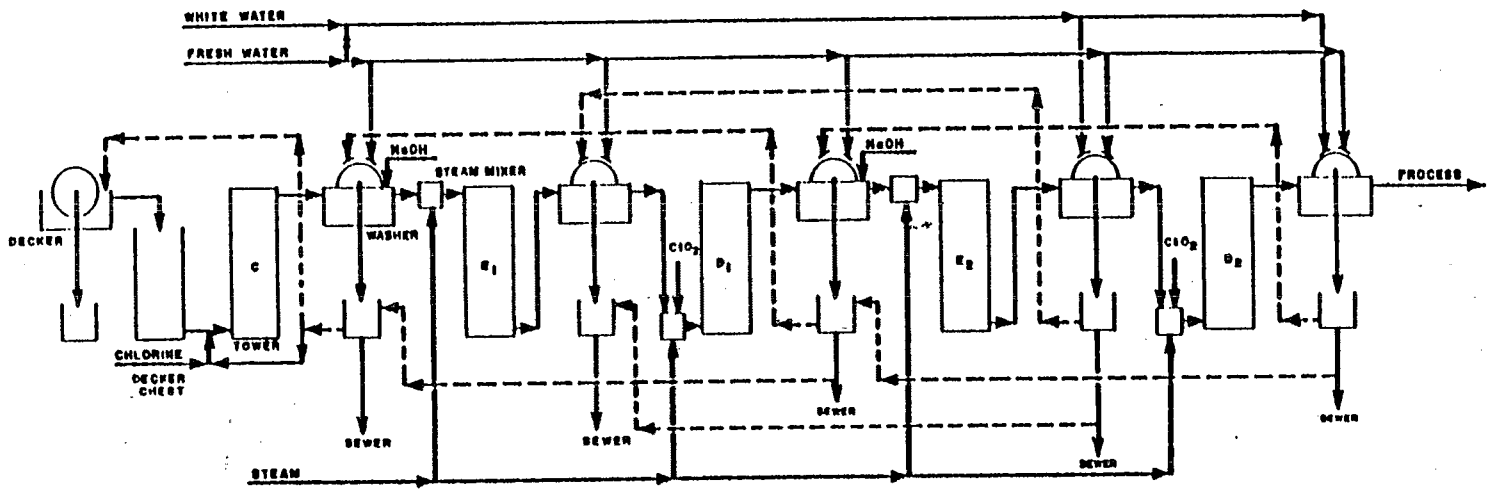

JUMP STAGE WASHING IN
BLEACH PLANT

OTHER PROCESSES USING CHLORINE, HYPOCHLORITE, OR BLEACHED PULPS

- BLEACHED SULFITE PULP
  - CEH
  - CEHH
- BLEACHED DEINKED PULP - LOW GROUNDWOOD
  - C
  - H
  - CH
  - CEH
- PURCHASED BLEACHED PULPS
  - KRAFT
  - SULFITE
- WASTE PAPER - LEDGER TYPE

ALTERNATIVE KRAFT BLEACHING PROCESSES USING OXYGEN

- APPLIED AT DIGESTER BEFORE DISCHARGE
- SEPARATE DELIGNIFICATION VESSEL FOLLOWING DIGESTER
- USED AT BROWNSTOCK WASHER AREA
- USED FOLLOWING FIRST BLEACH STAGE
- USED IN THE E_1 STAGE

TYPICALLY: OCED

CE_0D

$D/C\ E_0\ D$

THE USE OF O_2 BEFORE BLEACHING EARLY IN THE BLEACH REDUCES THE LIGNIN CONTENT LOW ENOUGH SO FEWER BLEACH STAGES ARE REQUIRED TO COMPLETE THE BLEACHING.

DISCUSSION OF

OXYGEN BLEACHING

- CAN CONTINUE DELIGNIFICATION (LOWER KAPPA NO.) MAKING FOLLOWING BLEACHING EASIER

- CAN BE INTEGRATED WITH BLACK LIQUOR RECOVERY SYSTEM
  - REDUCE BOD LOSS
  - REDUCE COLOR
  - REDUCE DISSOLVED SOLIDS LOSS
  - REDUCE NET LOAD TO RECOVERY

- REDUCES TOTAL BLEACH DEMAND - MORE THAN SAME DELIGNIFICATION BY NORMAL COOKING

- CHEMICAL SAVINGS

- CAN BE USED AFTER CHLORINATION BUT BENEFITS LESS PRONOUNCED EXCEPT TO REDUCE FOLLOWING HYPO OR CLO_2 DEMAND

- OXYGEN LESS EXPENSIVE THAN CHLORINE

- RETROFIT COSTS INCURRED IN SWITCH FROM CHLORINE BLEACHING

ALTERNATIVE KRAFT BLEACHING PROCESSES USING CHLORINE DIOXIDE

D/CEHD

D/CEHED

D/CEDED

DEDED - EXPERIMENTAL

DISCUSSION OF

CHLORINE DIOXIDE SUBSTITUTION

- MORE SELECTIVE OXIDIZING BLEACHING AGENT
- MADE KRAFT BLEACHING POSSIBLE - USED IN FINAL STAGE(S)
- CAN REPLACE MUCH OF CHLORINE IN TRADITIONAL FIRST STAGE
  - USE AS MIXTURE OF CLO_2 AND CL_2
  - CHLORINATE AND FOLLOW WITH CLO_2
  - USE CLO_2 AND FOLLOW WITH CL_2

    (THIS IS MOST EFFECTIVE METHOD)
- IMPROVED FINAL PULP STRENGTH PROPERTIES*
- HIGHER PULP VISCOSITY*
- HIGHER BRIGHTNESS FOR GIVEN TOTAL EQUIVALENT BLEACH APPLIED
- REDUCED EFFLUENT COLOR
- REDUCED TOXICITY AND MUTAGENICITY
- RETROFIT COSTS INCURRED IN SWITCH FROM CHLORINE BLEACHING

* DEPENDS ON SEQUENCE AND APPLICATION LEVELS.

APPLICATION OF ALTERNATIVE

BLEACHING PROCESSES

KRAFT MILLS USING CHLORINE AND/OR HYPOCHLORITE	84 MILLS (124 INCLUDING UNBLEACHED)
KRAFT MILLS USING CLO_2 IN FIRST STAGE	10 MILLS
KRAFT MILLS USING OXYGEN - (DELIGNIFICATION OR BLEACHING)	9 MILLS
SULFITE MILLS USING CHLORINE AND/OR HYPOCHLORITE	17 MILLS (19 INCLUDING UNBLEACHED)
DEINK MILLS USING CHLORINE AND/OR HYPOCHLORITE	30 MILLS
MISCELLANEOUS PULPING MILLS USING CHLORINE AND/OR HYPOCHLORITE	14 MILLS

OTHER MODIFIED BLEACHING

SEQUENCES TO REDUCE CHLORINE

- NITROGEN DIOXIDE PRETREATMENT - BEFORE OXYGEN AND DELIGNIFICATION
  - MAY REDUCE BOD - 55%
  - MAY REDUCE COD - 55%
  - MAY REDUCE TOCL - 55%
  - MAY REDUCE COLOR - 75%
  - THIS IS AN EXPERIMENTAL PROCESS - SCA - SWEDEN - PROCESS IS UNDER DEVELOPMENT
- OZONE BLEACHING
  - POSSIBLE CL_2 REPLACEMENT
  - UNDER DEVELOPMENT - GRENOBLE, FRANCE - D. LACHENAL
  - LOWER PULP YIELD
  - LOWER VISCOSITY
  - LOW SELECTIVITY - CARBOHYDRATE DEGRADATION
- PEROXIDE BLEACHING
  - USUALLY H_2O_2
  - EFFECTIVE FINAL TREATMENT TO REDUCE REVERSION
  - CAN REDUCE EQUIVALENT CHLORINE OR HYPOCHLORITE
  - COST FOR BUFFERED H_2O_2 WITH CHELATING AGENTS AND POLYPHOSPHATES IS HIGH FOR MARGINAL BRIGHTNESS GAINS - NOT A GOOD GENERAL BLEACH ON KRAFT PULPS

U.S. EPA/PAPER INDUSTRY COOPERATIVE DIOXIN SCREENING STUDY

EPA 440/1-88-025, March 1988

This report is available under separate cover from the Industrial Technology Division, at the address given on page i.

STATEMENT OF
MARTHA G. PROTHRO
DIRECTOR
OFFICE OF WATER REGULATIONS AND STANDARDS
BEFORE THE
SUBCOMMITTEE ON WATER RESOURCES
OF THE
COMMITTEE ON PUBLIC WORKS AND TRANSPORTATION
U.S. HOUSE OF REPRESENTATIVES
WASHINGTON, D.C.

July 13, 1988

Good morning. My name is Martha Prothro, and I am Director of the Environmental Protection Agency's Office of Water Regulations and Standards. I am here today to describe my office's nationwide initiatives concerning the chemical compound dioxin. These initiatives led to the discovery of dioxin contamination in the Pigeon River, as just described by Mr. Barrett. I will also discuss our strategy for additional data gathering and for protecting the aquatic environment from dioxin contamination. First, I will briefly describe the dioxin family of chemical compounds in order to provide you with some background on this issue.

The family of dioxins includes over 200 related chemical compounds with varying chemical, physical, and toxicological properties. Dioxins are unwanted by-products in the manufacture of chemical products, in certain combustion processes, and in chemical wood pulp bleaching operations.

Several of the dioxins are highly toxic, especially 2,3,7,8-tetrachlorodibenzo-p-dioxin (2,3,7,8-TCDD). Experimental studies with 2,3,7,8-TCDD in animals have demonstrated a variety of toxic effects. Based on these animal studies, EPA considers 2,3,7,8-TCDD to be a probable carcinogen in humans.

EPA's specific regulatory efforts with respect to dioxin began in the early 1970's when the Agency initiated proceedings to cancel the registration of certain uses of the pesticide 2,4,5-trichlorophenoxy acetic acid (2,4,5-T). This compound and its precursor, 2,4,5-trichlorophenol (2,4,5-TCP) were the only major sources of dioxin that had been identified at that time. It was discovered that 2,3,7,8-TCDD was formed in the synthesis of the 2,4,5-TCP intermediate in the manufacturing process.

Because of the toxicity of dioxins, the persistence of dioxins in soils and sediments, and the detection of dioxins at a variety of sites in the U.S., EPA issued a Dioxin Strategy in 1983 to establish a framework for addressing dioxin contamination. The Dioxin Strategy included three initiatives: (1) a broad National Dioxin Study of dioxin contamination in the environment and its associated risks; (2) enforcement and cleanup actions directed at contaminated sites; and (3) evaluation of regulatory and disposal alternatives to prevent future environmental contamination. The Strategy also established a management framework for coordinating the numerous dioxin-related activities throughout the Agency.

EPA's National Dioxin Study included investigation of production and disposal sites for the pesticide 2,4,5-T and its precursor 2,4,5-TCP. Waste combustion facilities were also investigated since 2,3,7,8-TCDD was determined to be present in incinerator flue gas. EPA also analyzed over 4,000 samples of soil, sediment, fish, water, plants, and animals from 862 sites nationwide. As a result of these investigations, further sampling, clean up actions, emergency removals, or the issuance of health and fish advisories were initiated at 53 sites where potential exposures presented cause for concern.

A major, previously unexpected finding of the National Dioxin Study was that dioxin was present in fish downstream from 57 percent of the pulp and paper mill sites sampled. To follow up on these National Dioxin Study results, EPA sampled sludge at 22 pulp and paper mills in Wisconsin, Minnesota, and Maine in late 1985. It appeared at the time that dioxin was probably being formed as a by-product during the bleaching of wood pulp with chlorine or chlorine derivatives. Of the 22 mills, the highest dioxin level in sludge was found at a mill in International Falls, Minnesota. In cooperation with our Region V Office, we decided to obtain detailed sampling data for this mill. In March 1986, EPA requested that the company provide access and assistance to EPA and State staff in an intensive dioxin sampling study.

Before sampling actually took place at the request of the Minnesota mill, the American Paper Institute (API) and the National

Council of the Paper Industry for Air and Stream Improvement (NCASI), asked to participate in this mill sampling and urged that the study be expanded from one to five mills. The industry agreed to fund a portion of the project and to supply detailed process information for each mill selected for study. In June 1986, EPA and industry representatives entered into this agreement for a Cooperative Dioxin Screening Study, often referred to as the "Five Mill Study." The voluntary cooperation of the industry at this stage helped assure a more expeditious sampling program. Full scale sampling began in June and ended in January 1987. In the agreement, EPA retained its authority under Section 308 of the Clean Water Act to require additional data to be submitted if necessary.

While the sampling effort was underway, EPA successfully undertook to improve analytical methods so that additional dioxin and furan compounds could be analyzed at lower detection levels in the Five Mill Study. EPA provided Congress with preliminary results from the Five Mill Study along with the National Dioxin Study Report in September 1987. A summary of the preliminary results was also made public in October 1987 at an International Dioxin Symposium held in Las Vegas, Nevada. Dioxins and/or furans were found in the effluents of four of the five mills, the pulps of all five mills, and the wastewater treatment plant sludges of all five mills. EPA recently published the final technical report for the Five Mill Study.

Because we found dioxin in the pulps at the five mills, it appeared necessary to consider the possibile health impacts of the presence of dioxin in some consumer and food packaging products. We therefore provided this information to EPA's Office of Toxic Substances (OTS) and other federal agencies, including the U.S. Food and Drug Administration (FDA) and the Consumer Product Safety Commission (CPSC). An interagency group then agreed to follow up on the Five Mill Study by further characterizing dioxin levels at U.S. pulp and paper mills bleaching pulp with chlorine or chlorine derivatives. At the same time, the pulp and paper industry represented by API and NCASI expressed an interest in again cooperating voluntarily on follow-up work. In November 1987, we described to paper industry representatives in detail the data needs of the federal agencies, and a cooperative approach to gathering that information was developed.

On March 8, 1988, the Office of Management and Budget approved the cooperative data collection activities agreed upon by EPA and the industry. On April 25, 1988, the cooperative agreement was signed by all parties. Forty-two companies representing 103 mills where chlorine or chlorine derivatives are used to bleach pulp have agreed to participate. From this study, EPA will receive from each company all existing dioxin/furan analytical results, detailed bleach plant process information, information on wastewater treatment systems and sludge disposal practices, and dioxin/furan 5-day composite

results of effluents, sludges, and pulps. Sampling has already begun.

Again, the industry's willingness to cooperate in a study of the 103 mills assured the most expeditious information gathering possible. By agreement, the industry is funding the total project which is now underway. EPA is specifying consistent sampling and analytical protocols and reporting methods to be used and is auditing all stages of the study. Industry will submit to EPA much more extensive process information and dioxin data for 25 of the 103 mills the study covers. If any of the companies should fail to cooperate or if additional information is needed, EPA will exercise its authority under Section 308 of the Clean Water Act to require that all necessary information be developed and provided to us. EPA will release the results from this study as information becomes available. We expect to have all of the agreed upon dioxin analytical data by the spring of 1989.

In addition to the efforts already described, my staff is assessing treatment technologies to reduce dioxin levels. For example, samples were taken from two mills in December 1987 to assess the potential for reducing effluent levels of total suspended solids and dioxin by adding coagulants or polymers. We expect to publish the results from this study next month.

Another potential technology for reducing dioxin discharges is oxygen delignification. This technology is a bleaching process where oxygen is used prior to chlorine bleaching. This summer we will sample several mills that use oxygen delignification. We plan to study the data from all of these activities and to revise, if necessary, the nationally applicable pulp and paper mill effluent limitations guidelines. These guidelines establish the minimum technology-based effluent controls that pulp and paper mills must achieve.

One more study is currently underway that will be relevant to our regulation of dioxins in pulp mill effluents. The National Bioaccumulation Study was initiated to determine whether fish tissue has been contaminated by any of approximately 65 pollutants of concern, including dioxins and furans. EPA initiated this nationwide fish tissue sampling survey at approximately 400 sites to discover whether pollutants with properties similar to 2,3,7,8-TCDD might bioaccumulate in the aquatic food chain. Final results should be available by the spring of next year. To date, dioxin has been detected in fish tissue collected near 36 mills using chlorine to bleach pulp. No dioxin was detected in fish tissue collected near three mills. Levels in the whole fish samples ranged from less than 1 to 118 parts per trillion. Detectable levels in the fillet samples, the edible portions of the fish, were generally much lower than those found in the whole fish samples. Moreover, the levels in the fillets were

found to be below the FDA action level of 25 parts per trillion. However, in certain areas, state health agencies have issued fish consumption advisories. We anticipate that additional fish consumption advisories will be made as more data becomes available.

Finally, I will briefly discuss our plans for issuing or revising discharge permits for the affected mills. EPA is developing a long-term NPDES permitting strategy for pulp mill dioxin discharges. We plan to issue final guidance to EPA regions and the states after review of the effluent, sludge, and pulp data from the cooperative study. However, in the meantime, permit writers will take appropriate action in modifying NPDES permits for mills where dioxin is detected. Appropriate permit requirements may include effluent limitations on dioxin discharges, additional effluent and/or water quality monitoring requirements, reopener provisions to allow for more stringent control requirements wherever necessary and appropriate, and requirements to conduct further studies on treatment technologies. My staff is available to provide technical assistance to state and EPA Regional permit writers.

You may be interested to know that EPA is also following dioxin-related activities in other countries. In November 1987, Office of Water staff met with representatives from the Swedish Environmental Protection Board and Environment Canada in Washington, D.C. to discuss, among other things, the presence

of pollutants of concern, including dioxins/furans and other chlorinated organics in bleached pulp and paper mill effluents. Representatives of the three nations agreed to exchange information. In addition, we have had several subsequent technical exchanges with Environment Canada.

This concludes my prepared testimony. I will be pleased to answer any questions you may have. Thank you.

U.S. EPA / PAPER INDUSTRY
COOPERATIVE DIOXIN STUDY

ANALYTICAL RESULTS

This report presents all analytical data for 2,3,7,8-TCDD and 2,3,7,8-TCDF in pulp, effluent and sludge received to date under the Cooperative Dioxin Study. Data are listed by mill. Abbreviations used in this report are defined below. If there are any questions concerning the data, contact Jennie Helms at (202)382-7155.

UNITS: The unit of measurement for 2378-TCDD/TCDF concentration

ppt = part per trillion
ppq = part per quadrillion

2378-TCDD/TCDF
CONCENTRATION: Reported value of chemical concentration

ND = Not Detected, in these instances the value reported is the detection limit
NQ = Not Quantified, lab analyses are being re-run for these samples

LAB: The analytical laboratory which completed the analysis

CAL = California Analytical Laboratories
Enseco, CA
WSU = Brehm Laboratory, Wright State Univ.
Dayton, OH
TRI = Triangle Laboratories
Research Triangle Park, NC

NOTES: Comments on analysis or sample origin

LDUP = laboratory duplicate analysis
FDUP = field duplicate sample

U.S. EPA/ Paper Industry
Cooperative Dioxin Study

Analytical Results

Sample Matrix	Units	2378-TCDD Concentration		2378-TCDF Concentration		Lab	Comments
** State: AK							
* Ketchikan Pulp & Paper				Ketchikan			
Pulp	ppt	0.3	ND	0.3	ND	WSU	
* Alaska Pulp Corp.				Sitka			
Pulp	ppt	0.7	ND	1.4		WSU	

U.S. EPA/ Paper Industry
Cooperative Dioxin Study

Analytical Results

Sample Matrix	Units	2378-TCDD Concentration		2378-TCDF Concentration		Lab	Comments
** State: AL							
* Container Corp. of America				Brewton			
Effluent	ppq	6.5		10.0	ND	CAL	
Pulp	ppt	2.3		4.5		WSU	
Sludge	ppt	16.0		34.0		CAL	
* James River Corp.				Butler			
Effluent	ppq	23.0		72.0		CAL	
Pulp	ppt	3.3		19.0		WSU	
Pulp	ppt	1.2		1.4		WSU	
Pulp	ppt	3.7		30.0		WSU	
Sludge	ppq	330.0		1100.0		CAL	Non-dewatered
* Alabama River Pulp				Claiborne			
Effluent	ppq	41.0		250.0		CAL	FDUP
Effluent	ppq	40.0		250.0		CAL	FDUP
Effluent	ppq	46.0		210.0		CAL	
Pulp	ppt	43.0		120.0		WSU	
Pulp	ppt	3.9		97.0		WSU	FDUP
Pulp	ppt	3.8		98.0		WSU	FDUP
Sludge	ppt	81.0		373.0		CAL	FDUP
Sludge	ppt	73.0		393.0		CAL	FDUP
Sludge	ppt	68.0		342.0		CAL	FDUP
* Kimberly-Clark Corp.				Coosa Pines			
Effluent	ppq	35.0		74.0		CAL	
Pulp	ppt	0.3	ND	1.0		WSU	
Pulp	ppt	4.1		7.3		WSU	
Pulp	ppt	11.0		38.0		WSU	
Pulp	ppt	2.6		3.3		WSU	
Sludge	ppq	3800.0		9200.0		CAL	Non-dewatered
* Champion International				Courtland			
Effluent	ppq	77.0		340.0		CAL	
Pulp	ppt	3.5		7.6		WSU	
Pulp	ppt	23.0		102.0		WSU	
Sludge	ppt	215.0		923.0		CAL	
* Gulf States Paper Corp.				Demopolis			
Effluent	ppq	38.0		110.0		CAL	
Pulp	ppt	5.2		20.0		WSU	
Sludge	ppt	51.0		0.0	NQ	CAL	

U.S. EPA/ Paper Industry
Cooperative Dioxin Study

Analytical Results

Sample Matrix	Units	2378-TCDD Concentration		2378-TCDF Concentration	Lab	Comments
* Boise Cascade Corp.				Jackson		
Effluent	ppq	120.0		630.0	CAL	FDUP
Effluent	ppq	95.0		540.0	CAL	FDUP
Pulp	ppt	11.0		104.0	WSU	
Pulp	ppt	9.1		71.0	WSU	
Sludge	ppt	18.0		147.0	CAL	FDUP
Sludge	ppt	18.0		169.0	CAL	FDUP
* International Paper Co.				Mobile		
Effluent	ppq	0.0	NQ	850.0	CAL	
Pulp	ppt	20.0		104.0	WSU	
Pulp	ppt	21.0		106.0	WSU	
Pulp	ppt	3.5		14.0	WSU	
Sludge	ppt	108.0		617.0	CAL	
* Scott Paper Co.				Mobile		
Effluent	ppq	14.0		19.0	CAL	
Pulp	ppt	1.7		2.2	CAL	
Pulp	ppt	0.6		0.8	CAL	
Sludge	ppt	9.5		18.0	CAL	
* International Paper Co.				Selma		
Effluent	ppq	81.0		310.0	CAL	
Pulp	ppt	2.1		21.0	WSU	
Pulp	ppt	4.7		22.0	WSU	
Sludge	ppq	680.0		2900.0	CAL	Non-dewatered

U.S. EPA/ Paper Industry
Cooperative Dioxin Study

Analytical Results

Sample Matrix	Units	2378-TCDD Concentration		2378-TCDF Concentration	Lab	Comments
** State: AR						
* Nekoosa Papers, Inc.				Ashdown		
Effluent	ppq	41.0		94.0	CAL	
Pulp	ppt	2.8		27.0	WSU	
Pulp	ppt	5.5		12.0	WSU	
Sludge	ppt	13.0		30.0	CAL	
* Georgia-Pacific Corp.				Crosset		
Effluent	ppq	96.0		370.0	CAL	
Pulp	ppt	6.0		59.0	WSU	
Pulp	ppt	7.7		89.0	WSU	
Pulp	ppt	19.0		308.0	WSU	
Sludge	ppt	168.0		1680.0	CAL	PRIM
Sludge	ppq	0.0	NQ	740.0	CAL	LDUP Non-dewatered
Sludge	ppq	190.0		710.0	CAL	LDUP Non-dewatered
* Potlatch Corp.				McGhee		
Effluent	ppq	40.0		100.0	CAL	
Pulp	ppt	21.0		59.0	WSU	
Pulp	ppt	12.0		83.0	WSU	
Sludge	ppt	91.0		433.0	CAL	
* International Paper Co.				Pine Bluff		
Effluent	ppq	110.0		1100.0	CAL	
Pulp	ppt	21.0		647.0	WSU	LDUP
Pulp	ppt	23.0		661.0	WSU	LDUP
Pulp	ppt	5.0		57.0	WSU	
Sludge	ppt	185.0		2940.0	CAL	

U.S. EPA/ Paper Industry
Cooperative Dioxin Study

Analytical Results

Sample Matrix	Units	2378-TCDD Concentration		2378-TCDF Concentration	Lab	Comments
** State: AZ						
* Stone Container Corp.				Snowflake		
Effluent	ppq	5.5		39.0	CAL	
Pulp	ppt	0.7	ND	1.3	WSU	

U.S. EPA/ Paper Industry
Cooperative Dioxin Study

Analytical Results

Sample Matrix	Units	2378-TCDD Concentration		2378-TCDF Concentration	Lab	Comments
** State: CA						
* Simpson Paper Co.				Anderson		
Effluent	ppq	250.0		8400.0	CAL	
Pulp	ppt	49.0		2620.0	WSU	
Sludge	ppt	278.0		6740.0	CAL	
* Gaylord Container Corp.				Antioch		
Effluent	ppq	49.0		800.0	CAL	
Pulp	ppt	32.0		969.0	WSU	
Sludge	ppt	101.0		1570.0	CAL	
* Simpson Paper Co.				Fairhaven		
Effluent	ppq	100.0		660.0	CAL	
Pulp	ppt	20.0		106.0	CAL	
* Louisiana Pacific Corp.				Samoa		
Effluent	ppq	0.0	NQ	320.0	CAL	
Pulp	ppt	9.1		59.0	CAL	

U.S. EPA/ Paper Industry
Cooperative Dioxin Study

Analytical Results

Sample Matrix	Units	2378-TCDD Concentration		2378-TCDF Concentration		Lab	Comments
** State: FL							
* Champion International				Cantonment			
Effluent	ppq	11.0	ND	38.0		CAL	
Pulp	ppt	0.7	ND	4.1		WSU	LDUP
Pulp	ppt	1.0	ND	0.7	ND	CAL	LDUP
Pulp	ppt	2.0		2.2		WSU	FDUP LDUP
Pulp	ppt	2.0		0.9		CAL	LDUP,FDUP
Pulp	ppt	4.9		1.1		CAL	FDUP
Sludge	ppt	14.0		21.0		CAL	
* ITT-Rayonier, Inc.				Fernandina Beach			
Pulp	ppt	0.2	ND	0.5	ND	WSU	
* Georgia-Pacific Corp.				Palatka			
Effluent	ppq	16.0		38.0		CAL	
Pulp	ppt	0.5	ND	0.9	ND	WSU	
Pulp	ppt	0.5	ND	2.4		WSU	
Sludge	ppq	92.0		410.0		CAL	Non-dewatered
* Stone Container Corp.				Panama City			
Effluent	ppq	8.4	ND	7.9		CAL	
Effluent	ppq	6.9		18.0		CAL	
Pulp	ppt	0.1	ND	6.6		WSU	
Sludge	ppt	3.6		16.0		CAL	
* Buckeye Cellulose				Perry			
Effluent	ppq	27.0		80.0		CAL	
Pulp	ppt	0.5		0.7		CAL	
Pulp	ppt	0.8	ND	2.5		CAL	
Sludge	ppt	12.0		40.0		CAL	PRIM
* St. Joe Paper Co.				Port St. Joe			
Effluent	ppq	21.0		60.0		CAL	
Pulp	ppt	2.2		5.7		WSU	

U.S. EPA/ Paper Industry
Cooperative Dioxin Study

Analytical Results

Sample Matrix	Units	2378-TCDD Concentration		2378-TCDF Concentration		Lab	Comments
** State: GA							
* Federal Paper Board Co.				Augusta			
Effluent	ppq	16.0		47.0		CAL	
Pulp	ppt	2.4		7.9		WSU	
Pulp	ppt	4.9		15.0		WSU	
Pulp	ppt	7.9		19.0		WSU	
Sludge	ppq	680.0		1400.0		CAL	Non-dewatered
* Brunswick Pulp and Paper				Brunswick			
Effluent	ppq	30.0		68.0		CAL	FDUP
Effluent	ppq	30.0		50.0		CAL	FDUP
Pulp	ppt	6.3		8.0		WSU	FDUP
Pulp	ppt	6.1		9.4		WSU	FDUP
Pulp	ppt	1.9		3.5		WSU	FDUP
Pulp	ppt	1.6		2.9		WSU	FDUP
Pulp	ppt	3.6		4.3		WSU	
Pulp	ppt	8.3		12.0		WSU	
Sludge	ppt	33.0		62.0		CAL	
* ITT-Rayonier, Inc.				Jesup			
Effluent	ppq	24.0		0.0	NQ	CAL	
Effluent	ppq	23.0		16.0		CAL	
Pulp	ppt	0.6	ND	0.8	ND	CAL	
Pulp	ppt	0.3	ND	0.8		WSU	
Pulp	ppt	0.7	ND	0.6		WSU	
Pulp	ppt	0.7	ND	0.9		WSU	
Sludge	ppt	3.0		2.4		CAL	
* Buckeye Cellulose				Oglethorpe			
Effluent	ppq	12.0	ND	26.0		CAL	
Pulp	ppt	0.5	ND	0.9	ND	CAL	
Sludge	ppt	2.6		6.1		CAL	LDUP
Sludge	ppt	2.6		3.0		CAL	LDUP
* Gilman Paper Co.				St. Marys			
Effluent	ppq	6.5	ND	17.0		CAL	
Pulp	ppt	2.8		6.8		WSU	
Pulp	ppt	3.7		12.0		WSU	
Sludge	ppq	220.0		610.0		CAL	Non-dewatered

U.S. EPA/ Paper Industry
Cooperative Dioxin Study

Analytical Results

Sample Matrix	Units	2378-TCDD Concentration	2378-TCDF Concentration	Lab	Comments
** State: ID					
* Potlatch Corp.			Lewiston		
Effluent	ppq	71.0	360.0	CAL	FDUP
Effluent	ppq	79.0	320.0	CAL	FDUP
Pulp	ppt	25.0	153.0	WSU	FDUP
Pulp	ppt	27.0	147.0	WSU	FDUP
Sludge	ppt	78.0	639.0	CAL	

U.S. EPA/ Paper Industry
Cooperative Dioxin Study

Analytical Results

Sample Matrix	Units	2378-TCDD Concentration		2378-TCDF Concentration		Lab	Comments
** State: KY							
* Wilamette Industries				Hawesville			
Effluent	ppq	11.0	ND	8.0	ND	CAL	
Pulp	ppt	0.3	ND	1.1		WSU	
Pulp	ppt	0.5	ND	1.9		WSU	
Sludge	ppq	83.0		380.0		CAL	Non-dewatered
Sludge	ppq	52.0		210.0		CAL	Non-dewatered
* Westvaco Corp.				Wickliffe			
Effluent	ppq	35.0		150.0		CAL	
Pulp	ppt	12.0		55.0		WSU	LDUP
Pulp	ppt	11.0		54.0		WSU	LDUP
Pulp	ppt	2.1		25.0		WSU	
Sludge	ppt	9.4		46.0		CAL	

U.S. EPA/ Paper Industry
Cooperative Dioxin Study

Analytical Results

Sample Matrix	Units	2378-TCDD Concentration	2378-TCDF Concentration	Lab	Comments
** State: LA					
* International Paper Co.			Bastrop		
Effluent	ppq	330.0	1600.0	CAL	
Pulp	ppt	5.1	22.0	WSU	FDUP
Pulp	ppt	5.7	23.0	WSU	FDUP
Pulp	ppt	6.3	42.0	WSU	
Sludge	ppt	140.0	677.0	CAL	
* Boise Cascade Corp.			Deridder		
Effluent	ppq	9.2	44.0	CAL	
Pulp	ppt	5.3	8.7	WSU	
Sludge	ppq	280.0	440.0	CAL	Non-dewatered
* James River Corp.			St. Francesville		
Effluent	ppq	82.0	320.0	CAL	
Pulp	ppt	6.4	19.0	WSU	
Pulp	ppt	4.9	15.0	WSU	
Sludge	ppt	96.0	243.0	CAL	
* Georgia-Pacific Corp.			Zachary		
Effluent	ppq	190.0	0.0 NQ	CAL	
Pulp	ppt	16.0	539.0	WSU	
Pulp	ppt	5.2	78.0	WSU	
Pulp	ppt	27.0	632.0	WSU	
Sludge	ppt	17.0	421.0	CAL	

U.S. EPA/ Paper Industry
Cooperative Dioxin Study

Analytical Results

Sample Matrix	Units	2378-TCDD Concentration	2378-TCDF Concentration	Lab	Comments
** State: MD					
* Westvaco Corp.			Luke		
Effluent	ppq	16.0	49.0	CAL	
Pulp	ppt	29.0	157.0	WSU	
Sludge	ppt	80.0	471.0	CAL	

U.S. EPA/ Paper Industry
Cooperative Dioxin Study

Analytical Results

Sample Matrix	Units	2378-TCDD Concentration		2378-TCDF Concentration	Lab	Comments
** State: ME						
* Scott Paper Co.				Hinckley		
Effluent	ppq	19.0		100.0	CAL	FDUP
Effluent	ppq	16.0		63.0	CAL	FDUP
Pulp	ppt	1.9		10.0	WSU	
Pulp	ppt	8.5		37.0	WSU	FDUP
Pulp	ppt	7.9		35.0	WSU	FDUP
Sludge	ppt	33.0		106.0	CAL	FDUP
Sludge	ppt	6.9		29.0	CAL	
Sludge	ppt	39.0		149.0	CAL	FDUP
Sludge	ppt	67.0		330.0	CAL	
* Lincoln Pulp and Paper				Lincoln		
Effluent	ppq	32.0		130.0	CAL	
Pulp	ppt	16.0		94.0	WSU	
Sludge	ppt	48.0		223.0	CAL	
* James River Corp.				Old Town		
Effluent	ppq	39.0		130.0	CAL	
Pulp	ppt	13.0		51.0	WSU	
Sludge	ppt	12.0		34.0	CAL	
* Boise Cascade Corp.				Rumford		
Effluent	ppq	120.0		570.0	CAL	
Pulp	ppt	116.0		800.0	WSU	
Pulp	ppt	17.0		111.0	WSU	
Sludge	ppt	105.0		674.0	CAL	
* Scott Paper Co.				Westbrook		
Effluent	ppq	6.3		12.0	CAL	
Pulp	ppt	4.2		16.0	WSU	
Pulp	ppt	8.1		30.0	WSU	
Sludge	ppt	13.0		55.0	CAL	
* Georgia-Pacific Corp.				Woodland		
Effluent	ppq	6.8		25.0	CAL	
Pulp	ppt	0.4	ND	0.9	WSU	
Sludge	ppt	1.9	ND	7.3	CAL	

U.S. EPA/ Paper Industry
Cooperative Dioxin Study

Analytical Results

Sample Matrix	Units	2378-TCDD Concentration		2378-TCDF Concentration	Lab	Comments
** State: MI						
* Mead Corporation				Escanaba		
Effluent	ppq	17.0	ND	50.8	WSU	
Pulp	ppt	25.0		116.0	CAL	
Pulp	ppt	18.0		68.0	CAL	FDUP
Pulp	ppt	15.0		39.0	CAL	FDUP
Sludge	ppt	125.0		574.0	WSU	
* Scott Paper Co.				Muskegon		
Effluent	ppq	8.4	ND	42.0	CAL	
Pulp	ppt	0.3	ND	1.0	WSU	LDUP
Pulp	ppt	0.4	ND	1.4	WSU	LDUP
* Champion International				Quinnesec		
Effluent	ppq	9.0		66.0	WSU	
Pulp	ppt	7.7		50.0	CAL	FDUP
Pulp	ppt	7.8		45.0	CAL	FDUP
Sludge	ppt	95.0		735.0	WSU	

U.S. EPA/ Paper Industry
Cooperative Dioxin Study

Analytical Results

Sample Matrix	Units	2378-TCDD Concentration	2378-TCDF Concentration	Lab	Comments
** State: MN					
* Potlatch Corp.			Cloquet		
Effluent	ppq	24.0	46.0	CAL	
Pulp	ppt	1.2	5.0	CAL	
Pulp	ppt	2.4	7.9	CAL	
Sludge	ppt	5.0	25.0	CAL	

U.S. EPA/ Paper Industry
Cooperative Dioxin Study

Analytical Results

Sample Matrix	Units	2378-TCDD Concentration	2378-TCDF Concentration	Lab	Comments
** State: MS					
* International Paper Co.			Moss Point		
Effluent	ppq	160.0	920.0	CAL	
Pulp	ppt	7.3	36.0	WSU	
Pulp	ppt	15.0	105.0	WSU	
Sludge	ppt	161.0	1020.0	CAL	
* International Paper Co.			Natchez		
Effluent	ppq	38.0	220.0	CAL	
Pulp	ppt	3.6	15.0	CAL	
Sludge	ppt	14.0	78.0	CAL	PRIM
* Leaf River Forest Products			New Augusta		
Effluent	ppq	200.0	410.0	CAL	
Pulp	ppt	15.0	35.0	CAL	
Pulp	ppt	14.0	23.0	CAL	
Pulp	ppt	3.8	7.7	CAL	
Sludge	ppt	681.0	0.0 NQ	CAL	

U.S. EPA/ Paper Industry
Cooperative Dioxin Study

Analytical Results

Sample Matrix	Units	2378-TCDD Concentration	2378-TCDF Concentration	Lab	Comments
** State: MT					
* Stone Container Corp.			Missoula		
Effluent	ppq	3.1	7.6 ND	CAL	
Pulp	ppt	4.1	13.0	WSU	
Sludge	ppq	55.0	150.0	CAL	Non-dewatered

U.S. EPA/ Paper Industry
Cooperative Dioxin Study

Analytical Results

Sample Matrix	Units	2378-TCDD Concentration		2378-TCDF Concentration		Lab	Comments
** State: NC							
* Champion International				Canton			
Pulp	ppt	17.0		27.0		WSU	
Pulp	ppt	6.0		9.9		WSU	
Pulp	ppt	6.5		11.0		WSU	FDUP
Pulp	ppt	4.6		5.5		WSU	FDUP
Pulp	ppt	5.8		10.0		WSU	
Sludge	ppt	175.0		0.0	NQ	WSU	FDUP
Sludge	ppt	172.0		260.0		WSU	FDUP
* Weyerhauser Co.				New Bern			
Effluent	ppq	44.0		180.0		CAL	
Pulp	ppt	7.5		45.0		WSU	
Sludge	ppt	373.0		1920.0		CAL	FDUP
Sludge	ppt	213.0		1600.0		CAL	FDUP
* Weyerhauser Co.				Plymouth			
Effluent	ppq	320.0		4000.0		CAL	
Pulp	ppt	10.0		82.0		CAL	
Pulp	ppt	14.0		222.0		CAL	
Pulp	ppt	33.0		318.0		CAL	
Sludge	ppt	1390.0		17100.0		CAL	
* Federal Paper Board Co.				Riegelwood			
Effluent	ppq	0.0	NQ	61.0		CAL	
Pulp	ppt	4.0		3.2		WSU	
Pulp	ppt	4.3		4.7		WSU	
Pulp	ppt	3.2		1.3		WSU	LDUP
Pulp	ppt	3.3		1.5		WSU	LDUP
Sludge	ppt	3.8		5.2		CAL	LDUP
Sludge	ppt	2.9		3.3		CAL	LDUP

U.S. EPA/ Paper Industry
Cooperative Dioxin Study

Analytical Results

Sample Matrix	Units	2378-TCDD Concentration	2378-TCDF Concentration	Lab	Comments
** State: NH					
* James River Corp.			Berlin		
Effluent	ppq	59.0	1200.0	CAL	
Pulp	ppt	32.0	1110.0	WSU	
Pulp	ppt	3.3	41.0	WSU	
Sludge	ppt	104.0	2930.0	CAL	

U.S. EPA/ Paper Industry
Cooperative Dioxin Study

Analytical Results

Sample Matrix	Units	2378-TCDD Concentration	2378-TCDF Concentration	Lab	Comments
** State: NY					
* Finch Pruyn & Co, Inc.			Glens Falls		
Pulp	ppt	0.3 ND	0.3 ND	WSU	
* International Paper Co.			Ticonderoga		
Effluent	ppq	18.0	150.0	CAL	FDUP
Effluent	ppq	24.0	160.0	CAL	FDUP
Pulp	ppt	16.0	103.0	WSU	LDUP
Pulp	ppt	17.0	108.0	WSU	LDUP
Pulp	ppt	31.0	185.0	WSU	
Sludge	ppt	59.0	267.0	CAL	PRIM
Sludge	ppt	306.0	2470.0	CAL	SEC

U.S. EPA/ Paper Industry
Cooperative Dioxin Study

Analytical Results

Sample Matrix	Units	2378-TCDD Concentration	2378-TCDF Concentration	Lab	Comments
** State: OR					
* Pope & Talbot, Inc.			Halsey		
Effluent	ppq	30.0	82.0	CAL	
Pulp	ppt	10.0	41.0	WSU	
Sludge	ppt	31.0	106.0	CAL	
* Boise Cascade Corp.			St. Helens		
Effluent	ppq	22.0	100.0	CAL	
Pulp	ppt	4.2	12.0	CAL	LDUP
Pulp	ppt	4.4	11.0	CAL	LDUP
Pulp	ppt	6.5	18.0	CAL	
Sludge	ppt	4.2	25.0	CAL	

U.S. EPA/ Paper Industry
Cooperative Dioxin Study

Analytical Results

Sample Matrix	Units	2378-TCDD Concentration		2378-TCDF Concentration		Lab	Comments
** State: PA							
* International Paper Co.				Erie			
Effluent	ppq	24.0		68.0		CAL	
Pulp	ppt	6.4		22.0		WSU	
Sludge	ppt	1.4	ND	3.0		CAL	LDUP
Sludge	ppt	0.9		3.1		CAL	LDUP
* Penntech Papers, Inc.				Johnsonburg			
Effluent	ppq	6.8	ND	14.0		CAL	
Effluent	ppq	9.7		65.0		CAL	
Pulp	ppt	3.1		38.0		WSU	
* Proctor & Gamble Co.				Mehoopany			
Pulp	ppt	2.0		1.1		WSU	
* Appleton Papers, Inc.				Roaring Springs			
Effluent	ppq	11.0	ND	18.0		CAL	
Pulp	ppt	1.0		21.0		CAL	
Sludge	ppt	5.0		113.0		CAL	COMB
* P.H. Glatfelter Co.				Spring Grove			
Effluent	ppq	8.4	ND	26.0		CAL	
Effluent	ppq	65.0		210.0		CAL	RAW WASTE
Pulp	ppt	3.9		13.0		CAL	LDUP
Pulp	ppt	6.5		18.0		CAL	LDUP
Pulp	ppt	0.4		2.2		CAL	
Sludge	ppt	0.0	NQ	0.0	NQ	CAL	

U.S. EPA/ Paper Industry
Cooperative Dioxin Study

Analytical Results

Sample Matrix	Units	2378-TCDD Concentration		2378-TCDF Concentration	Lab	Comments
** State: SC						
* Bowater Corp.				Catawba		
Effluent	ppq	24.0		42.0	CAL	
Pulp	ppt	2.1		3.3	WSU	
Sludge	ppq	620.0		880.0	CAL	Non-dewatered
* Union Camp Corp.				Eastover		
Effluent	ppq	20.0		53.0	CAL	
Pulp	ppt	0.4	ND	1.3	WSU	
Pulp	ppt	2.4		5.6	WSU	
Sludge	ppt	6.9		13.0	CAL	
* International Paper Co.				Georgetown		
Effluent	ppq	640.0		1600.0	CAL	FDUP
Effluent	ppq	490.0		1500.0	CAL	FDUP
Pulp	ppt	9.2		38.0	WSU	FDUP
Pulp	ppt	10.0		41.0	WSU	FDUP
Pulp	ppt	1.9		7.7	WSU	
Pulp	ppt	17.0		55.0	WSU	FDUP
Pulp	ppt	16.0		52.0	WSU	FDUP
Sludge	ppt	62.0		161.0	CAL	

U.S. EPA/ Paper Industry
Cooperative Dioxin Study

Analytical Results

Sample Matrix	Units	2378-TCDD Concentration		2378-TCDF Concentration		Lab	Comments
** State: TN							
* Bowater Corp.				Calhoun			
Effluent	ppq	6.8	ND	5.5	ND	CAL	
Pulp	ppt	7.7		53.0		WSU	
Sludge	ppt	0.0	NQ	17.0		CAL	LDUP Non-dewatered
Sludge	ppt	4.5		14.0		CAL	LDUP Non-dewatered
* Mead Corporation				Kingsport			
Effluent	ppq	6.0		44.0		CAL	
Pulp	ppt	1.5		26.0		WSU	
Sludge	ppt	3.0	ND	25.0		CAL	

U.S. EPA/ Paper Industry
Cooperative Dioxin Study

Analytical Results

Sample Matrix	Units	2378-TCDD Concentration		2378-TCDF Concentration		Lab	Comments
** State: TX							
* Temple-Eastex, Inc.				Evadale			
Effluent	ppq	0.0	NQ	0.0	NQ	CAL	
Pulp	ppt	1.9		9.6		WSU	
Pulp	ppt	3.1		6.3		WSU	
Pulp	ppt	7.8		22.0		WSU	
Pulp	ppt	4.1		13.0		WSU	
Sludge	ppt	16.0		49.0		CAL	
* Champion International				Houston			
Effluent	ppq	0.0	NQ	86.0		CAL	
Pulp	ppt	4.9		6.8		WSU	
Sludge	ppt	106.0		144.0		CAL	
* Simpson Paper Co.				Pasadena			
Effluent	ppq	0.0	NQ	1400.0		CAL	
Pulp	ppt	14.0		48.0		WSU	FDUP
Pulp	ppt	18.0		66.0		WSU	FDUP
Pulp	ppt	4.5		11.0		WSU	
* International Paper Co.				Texarkana			
Effluent	ppq	13.0		43.0		CAL	FDUP
Effluent	ppq	18.0		44.0		CAL	FDUP
Pulp	ppt	7.1		51.0		WSU	
Pulp	ppt	12.0		81.0		WSU	
Sludge	ppt	71.0		1000.0		CAL	FDUP
Sludge	ppt	0.0	NQ	600.0		CAL	FDUP

U.S. EPA/ Paper Industry
Cooperative Dioxin Study

Analytical Results

Sample Matrix	Units	2378-TCDD Concentration		2378-TCDF Concentration	Lab	Comments
** State: VA						
* Westvaco Corp.				Covington		
Effluent	ppq	180.0		520.0	CAL	FDUP
Effluent	ppq	18.0	ND	173.0	TRI	FDUP LDUP
Effluent	ppq	12.0		132.0	TRI	FDUP LDUP
Pulp	ppt	13.0		105.0	WSU	
Pulp	ppt	6.2		49.0	WSU	
Pulp	ppt	5.9		19.0	WSU	
Sludge	ppt	119.0		799.0	CAL	
* Union Camp Corp.				Franklin		
Effluent	ppq	68.0		71.0	CAL	
Pulp	ppt	1.1		2.1	CAL	
Pulp	ppt	5.2		5.7	CAL	LDUP
Pulp	ppt	5.4		6.9	CAL	LDUP
Pulp	ppt	3.8		4.2	CAL	
Pulp	ppt	3.2		3.6	CAL	
Sludge	ppt	3.6		6.0	CAL	PRIM
* Chesapeake Corp.				West Point		
Effluent	ppq	16.0		96.0	CAL	
Pulp	ppt	8.3		14.0	CAL	
Sludge	ppt	14.0		47.0	CAL	

U.S. EPA/ Paper Industry
Cooperative Dioxin Study

Analytical Results

Sample Matrix	Units	2378-TCDD Concentration		2378-TCDF Concentration		Lab	Comments	
** State: WA								
* Georgia-Pacific Corp.				Bellingham				
Pulp	ppt	2.6	ND	449.0		WSU		
* James River Corp.				Camas				
Effluent	ppq	0.0	NQ	0.0	NQ	CAL		
Pulp	ppt	0.2	ND	0.6		WSU		
Pulp	ppt	0.3	ND	0.9		WSU		
Pulp	ppt	12.0		152.0		WSU		
Sludge	ppt	12.0		105.0		CAL		
* Weyerhauser Co.				Cosmopolis				
Pulp	ppt	1.0	ND	6.3		WSU	FDUP	
Pulp	ppt	0.0	NQ	6.4		WSU	FDUP	
Pulp	ppt	0.3	ND	3.1		WSU	FDUP	
Pulp	ppt	0.3	ND	2.9		WSU	FDUP	
* Scott Paper Co.				Everett				
Pulp	ppt	0.3	ND	0.1	ND	WSU		
* Weyerhauser Co.				Everett				
Effluent	ppq	33.0		260.0		CAL		
Pulp	ppt	3.4		16.0		WSU		
Pulp	ppt	5.2		20.0		WSU		
* ITT-Rayonier, Inc.				Hoquiam				
Pulp	ppt	0.6	ND	3.8		WSU		
* Longview Fibre Co.				Longview				
Effluent	ppq	4.6	ND	57.0		CAL		
Pulp	ppt	4.8		0.0	NQ	WSU		
Pulp	ppt	4.7		18.0		WSU		
Sludge	ppt	69.0		437.0		CAL		
* Weyerhauser Co.				Longview				
Effluent	ppq	10.0		37.0		CAL	FDUP	
Effluent	ppq	8.5		21.0		CAL	FDUP	
Pulp	ppt	1.7		2.8		WSU	FDUP	
Pulp	ppt	1.6		2.8		WSU	FDUP	
Pulp	ppt	7.7		20.0		WSU		
Pulp	ppt	1.7		9.4		WSU		
Sludge	ppt	25.0		80.0		CAL	FDUP	
Sludge	ppt	0.0	NQ	84.0		CAL	FDUP	LDUP
Sludge	ppt	35.0		89.0		CAL	FDUP	LDUP

U.S. EPA/ Paper Industry
Cooperative Dioxin Study

Analytical Results

Sample Matrix	Units	2378-TCDD Concentration		2378-TCDF Concentration	Lab	Comments
* ITT-Rayonier, Inc.				Port Angeles		
Pulp	ppt	0.6	ND	2.1	WSU	
* Simpson Paper Co.				Tacoma		
Effluent	ppq	0.0	NQ	27.0	CAL	
Pulp	ppt	12.0		38.0	WSU	
Sludge	ppt	0.0	NQ	87.0	CAL	
* Boise Cascade Corp.				Wallula		
Effluent	ppq	360.0		7500.0	CAL	
Pulp	ppt	56.0		1380.0	WSU	
Sludge	ppt	70.0		1490.0	CAL	

U.S. EPA/ Paper Industry
Cooperative Dioxin Study

Analytical Results

Sample Matrix	Units	2378-TCDD Concentration		2378-TCDF Concentration		Lab	Comments
** State: WI							
* Wausau Paper Mills Co.				Brokaw			
Effluent	ppq	4.2	ND	14.0		CAL	
Pulp	ppt	0.4	ND	9.9		WSU	
Sludge	ppt	3.2		68.0		CAL	
* James River Corp.				Green Bay			
Effluent	ppq	11.0		61.0		CAL	TO RIVER
Effluent	ppq	8.5	ND	29.0		CAL	TO MSD
Pulp	ppt	0.8	ND	7.1		WSU	
Sludge	ppt	35.0		250.0		CAL	
* Nekoosa Papers, Inc.				Nekoosa			
Pulp	ppt	22.0		283.0		WSU	
Sludge	ppt	109.0		1300.0		CAL	
* Nekoosa Papers, Inc.				Nekoosa & Port Edwards			
Effluent	ppq	40.0		320.0		CAL	
* Pentair, Inc.				Park Falls			
Effluent	ppq	5.4	ND	4.8		CAL	
Pulp	ppt	0.5	ND	0.9	ND	WSU	
Sludge	ppt	9.4		90.0		CAL	
* Badger Paper Mills, Inc.				Peshtigo			
Effluent	ppq	9.8		280.0		CAL	
Effluent	ppq	4.5		110.0		CAL	
Pulp	ppt	4.4		323.0		WSU	
Sludge	ppq	36.0		1800.0		CAL	Non-dewatered
* Nekoosa Papers, Inc.				Port Edwards			
Pulp	ppt	0.4	ND	4.1		WSU	
* Weyerhauser Co.				Rothchild			
Effluent	ppq	12.0		24.0		CAL	
Pulp	ppt	15.0		26.0		WSU	
Sludge	ppt	58.0		150.0		CAL	
* Consolidated Papers, Inc.				Wisconsin Rapids			
Pulp	ppt	20.0		83.0		CAL	FDUP
Pulp	ppt	18.0		79.0		CAL	FDUP

☆ U.S. Government Printing Office : 1990 - 720-540/06614